-REVISION 003-

ACCIDENT PREVENTION PLAN

REMEDIAL ACTION ACTIVITIES AT THE EAST MAIN/WALL STREET PLUME OF THE ROCKAWAY BOROUGH WELL FIELD SUPERFUND SITE MORRIS COUNTY, NEW JERSEY

Contract Number W912DQ-05-D-0001
Task Order Number 0005

***Prepared for*:**

U.S. ARMY CORPS OF ENGINEERS
KANSAS CITY DISTRICT
601 East 12th Street, Room 410
Kansas City, Missouri 64106-2896

***Prepared by*:**

180 Gordon Drive, Suite 102
Exton, Pennsylvania 19341

CAPE Project Number 50001.005

May 2011

123530

TABLE OF CONTENTS

Section ***Page***

LIST OF ABBREVIATIONS AND ACRONYMS iv

1.0 SIGNATURE SHEET 1

2.0 BACKGROUND INFORMATION 3
- 2.1 APP Description and Implementation 3
- 2.2 Site Location 4
- 2.3 Background and Project Description 4
- 2.4 Description of Work 5

3.0 SAFETY AND HEALTH POLICY STATEMENT 6
- 3.1 CAPE Safety and Health Policy Statement 6
- 3.2 CAPE Safety Record 7

4.0 RESPONSIBILITIES AND LINES OF AUTHORITIES 7
- 4.1 Responsibility for Safety and Occupational Health 7
- 4.2 Key Project Personnel 7
- 4.3 CAPE Personnel S&H Responsibilities 7
  - 4.3.1 Project Manager 7
  - 4.3.2 Site Superintendent 8
  - 4.3.3 Safety and Health Manager 8
  - 4.3.4 Site Safety and Health Officer 8
  - 4.3.5 Site Personnel 9
- 4.4 Designated Competent Persons 9
- 4.5 Pre-Task Safety and Health Analysis 10
  - 4.5.1 Phases of Work That Require Activity Hazard Analysis 10
- 4.6 Safety Compliance System 10

5.0 SUBCONTRACTORS AND SUPPLIERS 11
- 5.1 List of Subcontractors 11
- 5.2 Selection of Qualified Subcontractors 11
- 5.3 Subcontractor Safety Requirements 12

6.0 TRAINING 13
- 6.1 General Training Requirements 13
- 6.2 Project Personnel Training Information 13
- 6.3 Site Orientation Briefing 14
- 6.4 Daily Safety Meetings 14
- 6.5 Monthly Supervisor Safety Meetings 14
- 6.6 First-Aid/CPR Training 14
- 6.7 Bloodborne Pathogen Training 15
- 6.8 30-Hour OSHA Construction Safety and Health Training 15
- 6.9 HazWOPER Training 16
- 6.10 Excavation Competent Person Training 16
- 6.11 Asbestos Training 17

6.12 Lead Training 17
6.13 Emergency Response Plan Training 17

7.0 SAFETY AND HEALTH INSPECTIONS 18
7.1 Safety Inspections 18
7.2 Safety Audits 18

8.0 ACCIDENT REPORTING 19
8.1 Accident Reporting 19
8.2 Accident Investigation 19
8.3 Accident Follow Up 20
8.4 Monthly Exposure Report 21

9.0 PLANS REQUIRED BY THE SAFETY MANUAL 21
9.1 Layout Plans for Temporary Structures 22
9.2 Emergency Response Plan: Procedures and Tests 22
9.3 Emergency Response Plan: Spill Plans 22
9.4 Emergency Response Plan: Firefighting Plan 22
9.5 Emergency Response Plan: Posting of Emergency Telephone Numbers 22
9.6 Emergency Response Plan: Man Overboard/Abandon Ship 23
9.7 Emergency Response Plan: Medical Support 23
9.8 Plan for Prevention of Alcohol and Drug Abuse 23
9.9 Site Sanitation Plan 23
9.10 Access and Haul Road Plan 23
9.11 Respiratory Protection Plan 23
9.12 Health Hazard Control Program 23
9.13 Hazard Communication Program 23
9.13.1 General Hazard Communication Requirements: 24
9.13.2 Written Hazard Communication Program: 24
9.13.3 Labels and Other Forms of Warning: 25
9.13.4 Material Safety Data Sheets: 25
9.13.5 Hazard Communication Training: 26
9.14 Process Safety Management Plan 26
9.15 Lead Abatement Plan 27
9.16 Asbestos Abatement Plan 27
9.17 Radiation Safety Program 27
9.18 Abrasive Blasting 27
9.19 Heat/Cold Stress Monitoring Plan 27
9.20 Crystalline Silica Monitoring Plan (Assessment) 27
9.21 Night Operations Lighting Plan 27
9.22 Fire Prevention Plan 27
9.23 Wild Land Fire Management Plan 29
9.24 Hazardous Energy Control Plan 29
9.25 Critical Lift Procedures 30
9.26 Contingency Plan for Severe Weather 30
9.27 Float Plan 30
9.28 Site-Specific Fall Protection and Prevention Plan 30
9.29 Demolition Plan (to include engineering survey) 30

9.30 Excavation/Trenching Plan 30
9.31 Emergency Rescue: Tunneling 30
9.32 Underground Construction Fire Prevention and Protection Plan 31
9.33 Compressed Air Plan 31
9.34 Formwork and Shoring Erection and Removal Plan 31
9.35 Pre-Cast Concrete Plan 31
9.36 Lift Slab Plans 31
9.37 Steel Erection Plan 31
9.38 Site Safety and Health Plan for HTRW Work 31
9.39 Blasting Safety Plan 31
9.40 Diving Plan 31
9.41 Confined Space Program 31

10.0 RISK MANAGEMENT PROCESSES 32

APPENDICES

APPENDIX A: Resumes for SHM and SSHO

- SHM Resume (Glen Mayekawa, CIH)
- SSHO Resume (Robert C. Landle).

APPENDIX B: Site Safety and Health Plan

- Site Safety and Health Plan.

APPENDIX C: Project Personnel Training Information

- Project Personnel Training Information.

LIST OF ABBREVIATIONS AND ACRONYMS

ACGIH	American Conference of Governmental Industrial Hygienists
AHA	Activity Hazard Analysis
AHAP	Asbestos Hazard Abatement Plan
AHERA	Asbestos Hazard Emergency Response Act
APP	Accident Prevention Plan
BBP	bloodborne pathogen
CFR	Code of Federal Regulations
CIH	Certified Industrial Hygienist
CHSM	Corporate Health and Safety Manager
CO	Contracting Officer
COR	Contracting Officer's Representative
CP	Competent Person
CPR	cardiopulmonary resuscitation
CSP	Certified Safety Professional
dBA	decibels on the A-weighted scale
DO	dissolved oxygen
DOT	U.S. Department of Transportation
EM-385-1-1	USACE *Safety and Health Requirements Manual*
EMR	Experience Modification Rate
EPA	U.S. Environmental Protection Agency
EW	Extraction Well
ºF	degrees Fahrenheit
GFCI	ground-fault circuit interrupter
GTS	groundwater treatment system
HAZWOPER	Hazardous Waste Operations and Emergency Response
KDHE	Kansas Department of Health and the Environment
LHCP	Lead Hazard Compliance Plan
mm	millimeter
MSDS	material safety data sheet
MW	Monitoring Well
NASBLA	National Association of Safe Boating Law Administrators
NJDEP	New Jersey Department of Environmental Protection
ORP	oxidation/reduction potential
OSHA	Occupational Safety and Health Administration
PCB	polychlorinated biphenyl
PE	Professional Engineer
PEL	Permissible Exposure Limit
PFD	personal flotation device
PM	Project Manager
POC	Point of Contact
PPE	personal protective equipment
PVC	polyvinyl chloride
QC	quality control
RCRA	Resource Conservation and Recovery Act
RFI	RCRA Facilities Investigation

ROD	Record of Decision
S&H	safety and health
SHM	Safety and Health Manager
SLERA	Screening Level Ecological Risk Assessment
SOHO	Safety and Occupational Health Officer
SOP	standard operating procedure
SOW	scope of work
SSHO	Site Safety and Health Officer
SSHP	Site Safety and Health Plan
STEL	Short-Term Exposure Limit
TAL	total analyte list
TLV	Threshold Limit Value
TWA	time-weighted average
USACE	U.S. Army Corps of Engineers
USCG	U.S. Coast Guard
VOC	volatile organic compound

1.0 SIGNATURE SHEET

This section of the Accident Prevention Plan (APP) contains information specified in EM 385-1-1, Appendix A, Section 1 "Signature Sheet." The name, title, phone number, and signature of the APP preparer and the names, titles, and signatures of company personnel approving and/or concurring with the plan are provided.

CAPE ACCIDENT PREVENTION PLAN SIGNATURE PAGE
FOR
REMEDIAL ACTION ACTIVITIES AT THE EAST MAIN/WALL STREET PLUME OF THE ROCKAWAY BOROUGH WELL FIELD SUPERFUND SITE
MORRIS COUNTY, NEW JERSEY

Contract Number W912DQ-05-D-0001
Task Order Number 0005

U.S. ARMY CORPS OF ENGINEERS - KANSAS CITY DISTRICT
601 East 12th Street, Room 410, Kansas City, Missouri 64106-2896

May 2011

Plan Prepared By:

Glen Mayekawa, CIH
Safety and Health Manager; (714) 599-9071

Plan Reviewed By:

Robert C. Landle
Site Safety and Health Officer; (732) 904-5630

Plan Approval By:

Christopher D. Karg
VP and Business Unit Leader; (610) 594-8607

Plan Approval By:

David Bettendorf, PG
Project Manager; (610) 470-1189

Plan Concurrence By:

Glen Mayekawa, CIH
Corporate Health and Safety Manager; (714) 599-9071

This Accident Prevention Plan has been prepared to meet the requirements of: OSHA standards, 29 CFR 1910 and 1926; USACE "Safety and Health Requirements Manual" (15 Sep 2008 edition) (EM 385-1-1); and the USACE, Kansas City District, Scope of Work (SOW) entitled: *Remedial Action Activities at the East Main/Wall Street (EM/WS) Plume of the Rockaway Borough Well Field Superfund Site, Morris County, New Jersey*, dated 3 May 2006 and revised 7 June 2010.

2.0 BACKGROUND INFORMATION

This section of the APP contains information specified in the United States Army Corps of Engineers (USACE) *Safety and Health Requirements Manual* (EM-385-1-1), Appendix A, Section 2 "Background Information." Background information that reviews APP implementation, site location and background, project description, phases of work requiring activity hazard analyses (AHAs), and the CAPE safety record are provided.

2.1 APP Description and Implementation

This APP presents the contractor safety and health (S&H) procedures to be implemented by CAPE for services associated with the USACE, Kansas City District, Remedial Action Activities at the East Main/Wall Street Plume of the Rockaway Borough Well Field Superfund Site, Morris County, New Jersey project. CAPE project work will be conducted under a USACE, Kansas City District contract (Contract Number W912DQ-05-D-0001; Task Order Number 0005).

Through implementation of this project APP, CAPE seeks to take proactive measures to recognize, evaluate, and control workplace hazards and to implement preventive actions to minimize the potential for employee injuries and illnesses. The objectives of the APP are to: provide the field team with a safe working environment during fieldwork; identify persons with authority and responsibility for APP implementation; establish procedures for identifying and evaluating workplace hazards; prescribe safety control measures to be implemented; provide a S&H program that promotes a safe working environment; create and reinforce safety conscious attitudes amongst employees; establish a system for ensuring employee compliance with safe work procedures; establish procedures for correcting unsafe workplace conditions and/or unsafe work practices; provide S&H training and instruction for employees; and implement procedures for the reporting and investigation of injuries and illnesses.

This APP has been prepared to meet the requirements of: Occupational Safety and Health Administration (OSHA) standards, Title 29, Code of Federal Regulations (CFR), Parts 1910 and 1926; USACE EM 385-1-1; and the USACE project specifications and SOW. The APP establishes the written S&H program for personnel involved in project fieldwork and applies and interfaces in conjunction with requirements of the CAPE S&H Program.

The APP contains accident prevention provisions established in Appendix A of the USACE *Safety and Health Requirements Manual* (EM-385-1-1), dated 15 September 2008. The APP contains the following major categories of information:

- Signature Sheet
- Background Information
- Statement of S&H Policy
- Responsibilities and Lines of Authority
- Subcontractors and Suppliers
- Training
- S&H Inspections

- Accident Reporting
- Plans Required by the Safety Manual
- Risk Management Processes.

The APP will be primarily implemented by the CAPE Project Manager (PM); Site Superintendent; Site S&H Officer (SSHO), and S&H Manager (SHM) in coordination with the USACE Contracting Officer's Representative (COR) and U.S Environmental Protection Agency (EPA) Point of Contact (POC).

Compliance with the APP is required of all CAPE personnel, subcontractors, and associated third parties on site. A copy of the APP will be maintained on site during work activities and will be available for inspection and review by site or agency personnel. Field personnel will review applicable aspects of the APP before site work and will sign an "APP Review" acknowledgment form (see SSHP Attachment 1 – SSHP Forms) indicating that they have reviewed the pertinent aspects of the plan.

The content of the APP may be revised and/or amended should additional information become available regarding the hazards present at the site and/or should significant changes occur in the SOW, operational procedures, site hazards, and/or hazard control measures. The APP may be modified by the SSHO upon review and approval of the SHM, PM, and COR. Field personnel are informed of changes to the APP through safety meetings and written addendum or revision to the APP.

2.2 Site Location

The Rockaway Borough Well Field Superfund Site is located in Morris County, New Jersey, approximately 3 miles northeast of Dover, New Jersey, and 24 miles northwest of Newark, New Jersey. The East Main/Wall Street Plume area of concern is located in the east-central portion of Rockaway Borough, west of the Rockaway River.

2.3 Background and Project Description

The Rockaway Borough Well Field site covers a 2-square-mile area and includes three municipal water supply wells, which are located in a glacial aquifer designated by EPA as the sole source aquifer for Rockaway Borough and the surrounding communities. Eight other wells previously used for potable water supply by the borough were abandoned because of their lack of productivity. In 1980, volatile organic compounds (VOCs) were detected in the municipal wells. The contaminated wells are close to the Rockaway River, which runs through the borough. The site is located in a suburban residential setting and is surrounded by homes, businesses, and municipal property. The Borough of Rockaway's municipal wells supply potable water to about 11,000 people.

In 1981, an emergency was declared due to the groundwater contamination, and the residents supplied by the distribution system were advised not to use their tap water for drinking and cooking. Temporary drinking water supplies were trucked in by the National Guard. In 1981, the Borough installed an activated carbon water treatment system to reduce contaminant concentrations. Rockaway Borough has since upgraded its

existing treatment system with the installation of an air stripper to ensure compliance with Safe Drinking Water Act standards.

In March 1985, the State initiated an investigation at the site, which confirmed the presence of VOC contamination in the groundwater. A Record of Decision (ROD) signed on September 29, 1986, called for the continuation of the existing wellhead treatment system and further study to identify sources and to delineate the full extent of contamination. The supplemental study involved identifying contaminant source areas, further delineation of the extent of groundwater contamination, and evaluation of additional alternatives for final groundwater cleanup. The study identified two separate plumes of groundwater contamination, the Klockner & Klockner plume and the Wall Street plume. A second ROD signed on September 30, 1991 selected a remedial action, which entailed extracting and treating contaminated groundwater to restore the aquifer.

2.4 Description of Work

This work is being conducted under the Resource Conservation and Recovery Act (RCRA) with the regulatory coordination of the New Jersey Department of Environmental Protection (NJDEP) and EPA Region II.

The project objectives involve: the installation of remedial extraction wells (EWs); treatment of extracted groundwater; discharge of treated groundwater; construction of the groundwater treatment system building; installation and testing of treatment system; demolition of the existing facility; performance of appropriate environmental monitoring to ensure effectiveness of the selected remedial action remedy, and conducting additional preparatory and post-design tasks, as specified in the SOW and associated modifications.

The primary tasks for this project are indicated below.

- Mobilization and Site Preparation
- EW/ Monitoring Well (MW) Installation
- Aquifer Pump Testing
- MW and Boring Abandonment
- Pipe Trenching and Installation
- Surveying
- Building Demolition
- Groundwater Well Pump – 1 Temporary Bypass
- GTS Building and Pump House Construction
- GTS Equipment Installation
- GTS Electrical Installation
- GTS Supervisory Control and Data Acquisition System Installation
- GTS Water Supply Piping
- Groundwater Well Sampling
- Start-up and Performance Testing
- Excavation, Grading and Backfilling for Flood Storage Creation
- Concrete Reinforcement and Formwork
- Concrete mixing, placement, curing and finishing
- Transportation and Disposal of Waste/Spoils

- Site Restoration and Demobilization.

3.0 SAFETY AND HEALTH POLICY STATEMENT

This section of the APP contains information specified in EM 385-1-1, Appendix A, Section 3 "Statement of Safety and Health Policy." A review of the CAPE S&H policy and safety record is provided.

3.1 CAPE Safety and Health Policy Statement

It is the policy of CAPE to perform work in a safe and healthful manner. The S&H of employees is of paramount concern with regard to the performance of company operations as employees are the company's most important asset and their well being its greatest responsibility. The S&H of every worker must be a primary consideration in every business decision and plan. CAPE management will maintain an S&H program that conforms to the best practice of organizations of this type. To be successful, such a program must encourage proper attitudes toward incident prevention on the part of both supervisors and employees. It also requires cooperation in all S&H program aspects, not only between supervisors and employees, but also between employees and their fellow workers. Only through such a cooperative effort can an effective S&H program be maintained.

One of the primary objectives of the CAPE S&H Program is to prevent incident occurrence. There is no phase of company operations of greater importance than incident prevention. CAPE's S&H goal is to have incident-free operations. This goal can only be achieved through total and demonstrated commitment to this S&H policy from each individual CAPE staff member. All personnel must all recognize and understand that incidents and injuries are preventable.

To establish and maintain an effective S&H program, the following must be accomplished:

- CAPE must provide a safe work environment by having a safe workplace, equipment, and materials
- CAPE must establish safe work operations, safe work rules and procedures, and comply with accepted safe work practices and S&H regulations
- CAPE must provide effective S&H training so that every staff member has the necessary knowledge to identify potential hazards and the necessary protocols, tools and equipment to appropriately mitigate identified hazards
- All personnel must understand that they have a duty and responsibility to maintain their own safety and the safety of their co-workers, at all times and in all situations
- Everyone must actively support the CAPE S&H Program and embrace the philosophy that "Incidents Can Be Prevented."

3.2 CAPE Safety Record

CAPE recognizes a responsibility to provide employees with a safe and healthful workplace and to provide clients with safe and effective services. CAPE considers safe operations and incident prevention to be a priority. A key CAPE goal for incident prevention is to maintain its excellent safety record. CAPE injury and illness history (experience modification rate [EMR], recordable injury and illness case rate, and lost workday injury and illness case rate) for the past 3 years is as follows:

- 2009: EMR of 0.72; recordable injury and illness case rate of 0.62; and lost workday injury and illness case rate of 0.31
- 2008: EMR of 0.70; recordable injury and illness case rate of 2.54; and lost workday injury and illness case rate of 0.95
- 2007: EMR of 0.73; recordable injury and illness case rate of 1.05; and lost workday injury and illness case rate of 0.00.

CAPE's accident experience goal for this contract is zero accidents.

4.0 RESPONSIBILITIES AND LINES OF AUTHORITIES

This section of the APP contains information specified in EM 385-1-1, Appendix A, Section 4 "Responsibilities and Lines of Authorities." Identification of key project personnel, lines of authority, and a description of CAPE personnel S&H responsibilities are provided.

4.1 Responsibility for Safety and Occupational Health

Ultimately, the implementation of the project safety and occupational health program is CAPE's responsibility.

4.2 Key Project Personnel

Key project personnel are identified in the project "Emergency Contact List" (see SSHP Attachment 2 – Emergency Contact List). Personnel that will be listed include those individuals serving in the following functions:

- Contracting Officer's Representative (USACE)
- Point of Contact (EPA)
- Project Manager (CAPE)
- Site Superintendent (CAPE)
- Safety and Health Manager (CAPE)
- Site Safety and Health Officer (CAPE).

4.3 CAPE Personnel S&H Responsibilities

4.3.1 Project Manager

The PM is responsible for overall direction, coordination, technical consistency, and review of the project contract. PM S&H responsibilities are listed below.

- Directing, coordinating, and implementing the project contract
- Reviewing and approving the APP
- Emphasizing S&H and holding personnel accountable for safe work performance
- Enforcing the implementation of and compliance with the APP and S&H procedures
- Providing resources and support to the Site Superintendent and SSHO
- Monitoring and evaluating S&H performance of project operations
- Communicating with the COR to evaluate and resolve S&H issues.

4.3.2 Site Superintendent

The Site Superintendent is charged with the overall responsibility for the successful completion of CAPE field operations. The Site Superintendent reports to the PM for project-related matters. Site Superintendent S&H responsibilities are to:

- Prepare and organize project activities on site
- Review and approve the site-specific APP
- Provide equipment and materials for project operations
- Emphasize S&H and hold personnel accountable for safe work performance
- Enforce implementation and compliance with the APP and S&H procedures
- Ensure correction of unsafe work conditions and/or unsafe work practices
- Monitor and evaluate S&H performance of project operations
- Report and investigate accidents and incidents and sign ENG Form 3394
- Communicate with the COR to evaluate and resolve S&H issues.

4.3.3 Safety and Health Manager

The SHM is the overall safety manager assigned to support the project. The SHM is a Certified Industrial Hygienist (CIH) or Certified Safety Professional (CSP). The SSHO has a direct reporting relationship to the SHM regarding all S&H matters. The SHM implements the APP and oversees the activities of the SSHO. The SHM has an independent reporting relationship from project management and supervision. A resume for the SHM is provided (see Appendix A). SHM S&H responsibilities are listed below.

- Developing and implementing the APP
- Preparing AHAs for project work tasks
- Providing S&H supervision for the SSHO
- Conducting S&H inspections and audits as scheduled with the PM
- Providing S&H technical assistance to the PM, Site Superintendent, and SSHO.

4.3.4 Site Safety and Health Officer

The SSHO is the onsite project S&H supervisor who is present during fieldwork activities. As per EM 385-1-1 requirements, the SSHO must be present at the site any time work is performed. If the SSHO must be absent from the site, the S&H duties must be delegated to another qualified responsible party at the site (e.g., Site Superintendent).

The SSHO must ensure that the person assuming this temporary role is first-aid/CPR certified and is fully aware of their role and responsibilities during the SSHOs absence. If a qualified replacement is not available, then work shall stop for a safety stand down until a qualified/certified person is available. A resume for the SSHO is provided (see Appendix A). SSHO S&H responsibilities are to:

- Review and approve the APP
- Maintain copies of the APP on site during field activities
- Implement provisions of the APP and CAPE Safety and Health Program (CSHP)
- Require that site personnel meet training and medical surveillance requirements
- Conduct site orientation training, APP review, and daily safety meetings
- Emphasize S&H and hold personnel accountable for safe work performance
- Review site hazards and establish safety control measures
- Maintain a hazardous substance inventory list
- Maintain copies of material safety data sheets (MSDSs)
- Maintain safety equipment and supplies
- Perform inspections for safe work operations
- Enforce implementation and compliance with the APP and S&H procedures
- Perform and/or coordinate exposure monitoring
- Report safety violations or S&H concerns promptly to the PM
- Ensure correction of unsafe work conditions and/or unsafe work practices
- Monitor and evaluate S&H performance of project operations
- Maintain S&H records
- Report and investigate accidents and incidents
- Communicate with the SHM and COR to evaluate and resolve S&H issues.

4.3.5 Site Personnel

Site personnel S&H responsibilities are to:

- Understand and comply with the APP
- Follow instructions of the SSHO or other competent authority
- Promptly report any unsafe work conditions or unsafe work practices
- Immediately report all injuries or illnesses to direct supervisors and the SSHO.

4.4 Designated Competent Persons

It is required that a designated competent person be present on the job site for work to be performed. The names of Competent and/or Qualified Persons and proof of competency or qualification to meet specific OSHA Competent/Qualified Persons requirements is provided (see SSHP Attachment 5 – List of Designated Competent Persons). Competent Persons (CPs) designated for crane operation and rigging are someone other than the SSHO who is qualified to perform in this function. The USACE District Safety and Occupational Health Officer (SOHO) will review the qualifications for acceptance.

4.5 Pre-Task Safety and Health Analysis

AHAs are prepared before beginning each major phase of work (operations involving a type of work presenting hazards not experienced in previous operations or where a new subcontractor or work crew is to perform). The AHA reviews hazards and control measures for primary site tasks. The AHA defines the activities to be performed and identifies the sequence of work, specific hazards anticipated, and control measures to be implemented to eliminate or reduce each hazard to an acceptable level. Work does not proceed on that phase of work until the AHA has been accepted by the COR and the AHA has been reviewed with all personnel involved with the activity. The AHA is continuously reviewed and modified when appropriate to address changing site conditions or operations. AHA modification occurs only with the concurrence of the SHM, and COR.

4.5.1 Phases of Work That Require Activity Hazard Analysis

The phases of work that for which AHAs have been prepared are listed below (see SSHP Attachment 6 – Activity Hazard Analyses).

- Mobilization and Site Preparation
- EW/ MW Installation
- Aquifer Pump Testing
- MW and Boring Abandonment
- Pipe Trenching and Installation
- Surveying
- Building Demolition
- Groundwater Well Pump – 1 Temporary Bypass
- GTS Building and Pump House Construction
- GTS Equipment Installation
- GTS Electrical Installation
- GTS Supervisory Control and Data Acquisition System Installation
- GTS Water Supply Piping
- Groundwater Well Sampling
- Start-up and Performance Testing
- Excavation, Grading and Backfilling for Flood Storage Creation
- Concrete Reinforcement and Formwork
- Concrete mixing, placement, curing and finishing
- Transportation and Disposal of Waste/Spoils
- Site Restoration and Demobilization.

4.6 Safety Compliance System

A safety compliance system is established to make sure that employees comply with safe work practices and S&H policies and procedures.

The system's effectiveness is highly dependent upon the involvement, direct supervision, and enforcement of safety requirements by supervisory personnel. In addition to safety inspections, this system includes disciplinary actions for unsafe work performance.

CAPE policy requires that employees strictly adhere to established safe work practices and procedures. If employees violate safety procedures or rules, they will be disciplined in accordance with the severity of the infraction. Employees who exhibit unsafe work performance will receive disciplinary action from the SSHO, Site Superintendent, and PM in consultation with the SHM. Disciplinary action can include the following, depending upon the severity of the safety infraction: Verbal warning; written warning notice; termination of employment; and/or other disciplinary action.

Similar disciplinary action is taken for managers and supervisors who fail to follow safety requirements. Additionally, negative ratings for employee performance reviews that affect merit pay increases are also implemented for managers and supervisors.

5.0 SUBCONTRACTORS AND SUPPLIERS

This section of the APP contains information specified in EM 385-1-1, Appendix A, Section 5 "Subcontractors and Suppliers." Subcontractors that CAPE intends to use during the project are identified. CAPE will implement measures to establish S&H controls on subcontractors that provide services on the project.

5.1 List of Subcontractors

Information on subcontractors and suppliers to be used to provide various services is provided in SSHP Attachment 3.

5.2 Selection of Qualified Subcontractors

Selection of qualified safety-conscious subcontractors is essential for quality work performance. CAPE includes contractor safety performance as part of the criteria for subcontractor selection and has established a standard operating procedure (SOP) to assist with contractor safety qualification review.

A prospective contractor seeking qualified subcontractor status shall complete a CAPE "Contractor Safety Qualification Questionnaire" as a supplement to the CAPE subcontractor prequalification packet. The questionnaire is submitted to the Subcontracts Administrator, or designee, for initial review and processing.

Required contractor submittals include:

- Completed and signed "Contractor Safety Qualification Questionnaire"
- Copies of OSHA 300 logs for the last 3 years
- Letter from the Workers' Compensation insurance carrier certifying the contractor's EMR for the most recent 3 years (an EMR greater than 1.0 requires a written explanation of measures being taken to reduce this rate)
- Copies of OSHA citations (as applicable)
- Listing or copy of the table of contents of the contractor's written safety program

If the submittal is complete then the Subcontracts Administrator reviews the questionnaire and compares the information against CAPE contractor safety qualification criteria. If all criteria are met, then the Subcontracts Administrator may deem the contractor's safety qualification as acceptable.

If all criteria are not met, then the questionnaire and attachments shall be forwarded to the Director of Compliance and Risk Management, General Manager Operations, PM, and CHSM for review/evaluation and acceptance of a variance or non-acceptance.

5.3 Subcontractor Safety Requirements

Subcontractors who come on site to perform fieldwork and/or enter controlled areas of the site are subject to APP requirements. CAPE requirements for controlling and coordinating subcontractor compliance with S&H requirements are detailed below.

- Subcontractors are required to follow applicable federal, state, and local governmental regulations, applicable requirements of the APP, and customer requirements for work at the facility
- Subcontractor workers are required to follow the instructions of the SSHO or other competent authority
- Subcontractor personnel who do not comply with S&H requirements may be immediately dismissed from the site by the SSHO, Site Superintendent, and/or PM
- Subcontractor personnel are required to attend a site orientation briefing from the SSHO to review pertinent aspects and S&H requirements of the APP. Subcontractor personnel must sign a form documenting that they have reviewed the plan, understand the APP requirements, and agree to follow the plan
- Subcontractor personnel (or a subcontractor representative) must attend a daily safety meeting conducted by the SSHO before starting work to review work operations and to discuss pertinent site safety topics
- Subcontractors are required to provide copies of required S&H training and certification documents to the SSHO, as applicable (i.e., licenses, training certifications, medical clearance [fitness for duty] certification, first-aid/cardiopulmonary resuscitation [CPR] training, respirator fit testing)
- Subcontractors are required to provide, before site work, a hazardous substances inventory list and copies of applicable MSDSs to the SSHO for hazardous substances to be brought on site by the subcontractor
- Subcontractors are required to provide an AHA for subcontractor work activities upon request of the SHM and/or SSHO. A detailed AHA is required for every phase of operations from all participants. The detail for the AHA should be to the extent that every phase and the tasks involved in those phases are considered to identify the associated hazards and risks during the operation. These task and hazard risk analyses must be modified as needed to address a changing work environment

- Subcontractors are required to enforce applicable APP requirements with subcontractor employees
- Subcontractors are required to review, understand, and comply with the APP
- Subcontractors are required to observe the buddy system during work activities
- Subcontractors are required to promptly report unsafe work conditions or unsafe work practices to the subcontractor supervisor and the SSHO
- Subcontractors are required to immediately report all injuries or illnesses to the subcontractor supervisor and the SSHO.

6.0 TRAINING

This section of the APP contains information specified in EM 385-1-1, Appendix A, Section 6 "Training." Requirements reviewed include: Safety and occupational health orientation training at time of initial assignment; mandatory training and certifications applicable to project activities and periodic retraining/recertification; and periodic S&H training for supervisors and employees.

6.1 General Training Requirements

Employees receive safety training regarding potential hazards associated with their work assignments. Site orientation safety meetings, that involve review of pertinent aspects of the APP, are completed for personnel before project fieldwork. Daily safety meetings are conducted for field operations and attendance is documented.

Copies of S&H training certificates will be reviewed and maintained by the SSHO. Personnel are not allowed to perform fieldwork until the SSHO has determined this documentation to be complete and sufficient.

Personnel assigned to fieldwork on this project are required to complete the following training (as applicable):

- Site orientation briefing (site personnel)
- Daily safety meetings (site personnel)
- Monthly supervisor safety meetings (supervisors)
- First-aid/CPR training (minimum two persons on site)
- Bloodborne pathogen training (designated first-aid responders)
- Construction S&H 30-hour training, or equivalent (SSHO)
- Hazardous Waste Operations training (site personnel)
- Asbestos hazard training (asbestos abatement personnel)
- Lead hazard training (lead abatement personnel)
- Emergency response plan training (site personnel).

6.2 Project Personnel Training Information

Project personnel training information is provided in Appendix C.

6.3 Site Orientation Briefing

Before the start of work, the SSHO provides a site orientation briefing to workers related to project operations and APP requirements. The briefing includes review of (as applicable):

- Provisions of the APP
- Facility background and SOW
- Key personnel and S&H responsibilities
- Site hazards
- Exposure monitoring program
- Site control procedures
- Personal Protective Equipment (PPE) requirements
- Procedures for reporting unsafe conditions or unsafe work practices
- Procedures for reporting an injury or illness
- Emergency procedures including warning signals and evacuation procedures
- Location and route to the emergency hospital
- Training requirements
- Medical surveillance requirements
- Recordkeeping procedures.

New workers must receive a site orientation briefing and review the APP before start of work. Site personnel will sign a form documenting that they have reviewed the plan, understand the APP requirements, and agree to follow the plan.

6.4 Daily Safety Meetings

Daily safety meetings are conducted at the beginning of each work shift to discuss operational tasks to be completed and pertinent site safety topics. Meetings are documented and those in attendance are required to sign a "Tailgate Safety Meeting Record" or equivalent form.

6.5 Monthly Supervisor Safety Meetings

Supervisor safety meetings are held at least once a month by the SSHO for site supervisors. The SHM and/or SSHO will conduct the meeting and discuss safety-related issues directed toward supervisor responsibilities. Meetings are documented and attending personnel sign a "Safety Meeting Attendance Roster" or equivalent form.

6.6 First-Aid/CPR Training

Selected site personnel will be designated as first-aid responders and have current certification in first-aid and CPR training to assist in initial handling of emergency medical incidents (see SSHP Attachment 4 – List of Designated First-Aid Responders). At least two persons who are currently certified in first-aid and CPR by the American Red Cross or other approved agency must be on site at all times during site work. These individuals may perform other duties at the site but must be immediately available to render first-aid or CPR when needed.

6.7 Bloodborne Pathogen Training

Designated first-aid responders are required to complete bloodborne pathogen (BBP) training as per the OSHA BBP regulation (29 CFR 1910.1030). BBP training is provided to personnel who have potential exposure to blood or other potentially infections materials. Training includes a review of the following:

- Review of the CAPE BBP SOP and the applicable aspects of the OSHA BBP standard
- General review of epidemiology, disease symptoms, and modes of transmission of BBP
- Explanation of the CAPE Exposure Control Plan and the means by which an employee can obtain a copy of the written plan
- Explanation of the appropriate methods for recognizing activities that may involve exposure to blood and other potentially infectious materials
- Explanation of the use and limitations of methods that will prevent or reduce exposure including appropriate engineering controls, work practices, and PPE
- Information on the types, use, location, removal, handling, decontamination, and disposal of PPE and an explanation of the basis for PPE selection
- Information on the Hepatitis B vaccine, including information on its efficacy, safety, method of administration, benefits of vaccination, and that vaccination is offered free of charge
- Information on appropriate actions to take and persons to contact in an emergency involving blood or other potentially infectious materials
- Explanation of procedures to follow if an exposure incident occurs, including the method of incident reporting, medical follow-up to be made available, and post-exposure evaluation and follow up required for the employee following an exposure incident
- Explanation of the signs, labels, and/or color-coding required for blood and other potentially infectious materials.

6.8 30-Hour OSHA Construction Safety and Health Training

Personnel who are assigned as an SSHO shall have attended a 30-Hour OSHA Construction S&H Training class. An equivalent course applicable to the work to be performed (i.e., OSHA 500 Trainer Course in Occupational S&H for the Construction Industry) is considered acceptable. Class topics typically reviewed during the 30-hour OSHA Construction S&H class include:

- Introduction to OSHA
- Fall Protection, Subpart M
- Electrical, Subpart K
- Struck By

- Caught In/Between
- Personal Protective and Lifesaving Equipment, Subpart E
- Health Hazards in Construction
- Stairways and Ladders, Subpart X
- Fire Protection and Prevention, Subpart F
- Materials, Handling, Storage, Use and Disposal, Subpart H
- Tools – Hand and Power, Subpart I
- Welding and Cutting, Subpart J
- Scaffolds, Subpart L
- Cranes, Derricks, Hoists, Elevators, and Conveyors, Subpart N
- Motor Vehicles/Mechanized Equipment/Marine Operations, Subpart O
- Rollover Protective Structures & Overhead Protection, Subpart W
- Signs, Signals and Barricades, Subpart G
- Excavations, Subpart P
- Concrete and Masonry Construction, Subpart Q
- Confined Space Entry
- Powered Industrial Vehicles
- Ergonomics
- Other Construction Industry Hazards or Policies.

6.9 HAZWOPER Training

Personnel involved in hazardous waste activities at the site must have completed hazardous waste operations and emergency response (HAZWOPER) training as required by the OSHA HAZWOPER standard. Certificates of HAZWOPER training will be maintained by the SSHO at the site. Copies of current training certification statements will be submitted before initial entry onto the work site. Required HAZWOPER training includes the following:

- Worker Training: 40 hours of initial training and 3 days of supervised field experience
- Manager and Supervisor Training: 8 hours of additional specialized manager/supervisor training
- Refresher Training: 8 hours of refresher training annually.

6.10 Excavation Competent Person Training

Excavation safety training is required for persons that are designated to perform as an Excavation CP for trenching and excavation operations that involve entry of personnel into trenches 4 feet or more or excavations 5 feet or more in depth. CPs must be knowledgeable in the OSHA "Excavation" standard (29 CFR 1926 Subpart P) and requirements for safe performance of excavation operations. Excavation safety training involves review of:

- OSHA excavation standards and company procedures
- Excavation safety hazards
- Soil analysis methods and classifications

- Protective systems for excavation safety
- Duties, authority, and responsibilities of the CP.

6.11 Asbestos Training

Required asbestos training for Class I and II asbestos work (as defined in the OSHA asbestos in construction standard) are: asbestos worker training meeting EPA Asbestos Hazard Emergency Response Act (AHERA) Model Accreditation Plan requirements (4 days-32 hours); asbestos supervisor training meeting EPA AHERA Model Accreditation Plan requirements (5 days-40 hours); and asbestos refresher training meeting EPA AHERA Model Accreditation Plan requirements (1 day-8 hours annually).

Site personnel who will be completing asbestos-related construction work at the site are required to be State of New Jersey certified, as applicable. Such personnel must have completed asbestos EPA AHERA worker, contractor/supervisor, building inspector, management planner, and project designer training, as applicable, and/or other training as required by federal, state, and local regulations.

6.12 Lead Training

Personnel who may potentially be exposed to inorganic lead above the OSHA action level or Permissible Exposure Limit (PEL) are subject to the requirements of the OSHA regulation for lead (29 CFR 1926.62). Lead hazard information must be communicated to workers including, but not limited to, warning signs and labels, MSDSs, and employee information and training. Workers are required to attend a training program if they are exposed to lead at or above the action level on any day and/or exposed to lead compounds that may cause skin or eye irritation. Initial training must be provided before time of job assignment involving potential lead exposure. Training must be provided on at least an annual basis for each worker who is subject to lead exposure at or above the action level on any day.

The Lead CP will conduct a safety conference before the commencement of lead-related work. The safety conference includes contractor representatives, the employer, workers, and worker representatives. The safety conference includes a discussion of planned lead-related work activities and hazard control measures to be implemented.

6.13 Emergency Response Plan Training

Emergency response plan training is conducted by the SSHO during initial site safety orientation briefings and elements are periodically reviewed during daily safety meetings. Emergency response plan training reviews: SSHP emergency response plan information that includes escape procedures and routes, critical plant operations, employee accounting following an emergency evacuation, rescue and medical duties, means of reporting emergencies, persons to be contacted for information or clarification, and off-site emergency support services and agreements.

7.0 SAFETY AND HEALTH INSPECTIONS

This section of the APP contains information specified in EM 385-1-1, Appendix A, Section 7 "Safety and Health Inspections." The requirement for daily job site S&H inspections (minimum) during site work is reviewed. The assignment of responsibility for conducting safety inspections is assigned to the SSHO. The frequency of inspections, documentation, deficiency tracking system, and follow-up procedures are reviewed. A description of CAPE safety inspection procedures is provided.

7.1 Safety Inspections

CAPE will conduct safety inspections of its work operations. CAPE anticipates conducting daily jobsite safety inspections and daily equipment inspections during the project. Inspections are conducted and/or coordinated by the SSHO. The SHM, SSHO, and/or project supervisors complete periodic safety inspections of project sites and work areas. Contractor quality control (QC) personnel, as part of their QC responsibilities, conduct and document safety observations. The SSHO completes daily safety inspections of work sites to identify and correct hazards and reports the information on a CAPE "Safety Inspection Report" form and/or on the Daily QC Report.

The SSHO records identified S&H issues and deficiencies and indicates the actions, timetable, and responsibility for correction of deficiencies on a CAPE "Safety and Occupational Health Deficiency Tracking List" form. The SSHO conducts follow-up inspections to correct identified deficiencies and documents these inspections on the "Safety and Occupational Health Deficiency Tracking List" form.

Safety inspections include work areas, equipment, work practices, and work procedures. Noncompliance items with APP requirements are corrected immediately or in a timely manner based on the classification of the hazard as imminent or non-imminent. In the case of unsafe or hazardous machinery, the equipment or area will be "red-tagged" (shut down or evacuated) until the hazard has been corrected. Employees are responsible for inspecting their work areas and equipment for unsafe or hazardous conditions. Employees should correct all unsafe conditions and report them immediately to their supervisor. Maintenance employees must periodically inspect and/or test field equipment for safe and hazard-free operation.

7.2 Safety Audits

The SHM and/or PM may also conduct independent safety audits of projects on a periodic basis. The frequency of these audits is at the discretion of the SHM and PM based on the type of job activities and potential hazards to be encountered on the project. Safety inspection report forms completed will be reviewed during audits by the SHM and PM to monitor hazards identified and corrective actions taken.

8.0 ACCIDENT REPORTING

This section of the APP contains information specified in EM 385-1-1, Appendix A, Section 8 "Accident Reporting." The person responsible for providing monthly exposure data (man-hours worked) and accident investigations, reports, and logs must be identified. A review of CAPE incident reporting and investigation procedures is provided.

8.1 Accident Reporting

Employees must immediately report all incidents, injuries and illnesses, property damage, liability exposure cases, spills, fires, and near miss incidents to their supervisor or the SSHO. Supervisors are responsible for notifying the Site Superintendent and SSHO, who in turn are responsible for notifying the CAPE PM, SHM, Corporate Risk Manager, and Corporate HSM (CHSM). The SHM and/or CHSM should be contacted immediately in injury or illness cases to assist with coordination of required medical assistance and related workers' compensation case management follow-up.

USACE requires that all accidents be reported to the Contracting Officer (CO)/COR as soon as possible but not more than 24 hours afterwards. The accident shall be thoroughly investigated and the findings of the investigation submitted along with appropriate corrective actions to the CO/COR in the prescribed format as soon as possible but no later than 5 working days following the accident. Corrective actions shall be implemented as soon as reasonably possible. Immediate accident notification is required for: a fatal injury; a permanent total disability; a permanent partial disability; the hospitalization of three or more people resulting from a single occurrence; and property damage of $200,000 or more. The CAPE PM, Site Superintendent, and/or SSHO are responsible for notifying the COR of all incidents.

The CHSM and the SHM must be notified immediately of any incident involving the hospitalization of three employees or a fatality. The CHSM and the SHM will conduct an immediate investigation. The CHSM and the SHM are responsible for notifying the jurisdictional OSHA office as soon as possible and no later than 8 hours of the accident. (Note: This notification includes weekend days as 24-hour emergency reporting access is available). The CHSM and the SHM will act as the agency interface upon their investigation. The report to OSHA must include: time and date of accident; employer's name, address, and telephone number; name and job title of person reporting the accident; address of the site of the accident; name of person to contact at the site of the accident; name and address of any injured employee(s); nature of injury; location where the injured employee was moved to; list and identity of other law enforcement agencies present at the site of the accident; and description of the accident and whether the accident scene has been altered.

8.2 Accident Investigation

The SSHO and the supervisor(s) responsible for an activity involved in an incident will participate in a complete investigation. Chargeable accidents are to be investigated by both contractor personnel and the USACE CO. This will require employee interviews and inspection and photographing of the unaltered accident scene and equipment involved (as

applicable). CAPE incident reporting and investigation forms must be completed and submitted according to the CAPE Incident Reporting and Investigation Procedures Posting and Flow Chart procedures within 24 hours of the injury (immediately for a serious injury or fatality). Forms to be completed include (as applicable): “Incident Report by Supervisor,” “Incident Statement by Employee,” “Incident Statement by Witness,” "Injury and Illness Report,” “Property Damage, Loss, and General Liability Report,” and “Vehicle Accident Report.” The root cause of the incident and recommendations of prevention must be identified.

USACE requires that accidents be thoroughly investigated by the contractor and findings of the investigation submitted along with appropriate corrective actions to the CO/COR in the prescribed format as soon as possible but no later than five (5) working days following the accident. Corrective actions shall be implemented as soon as reasonably possible. USACE ENG Form 3394 shall be used by the prime contractor to report all accidents that involve: injuries to employees or subcontractors that result in treatment by a medical professional and/or lost time and all damage to property and/or equipment in excess of $2,000 per incident.

The USACE ENG Form 3394 report must be prepared and submitted to the Contracting Officer within 24 hours following such accidents. The written report shall include: A description of the circumstances leading up to the accident, cause of the accident, and corrective measures taken to prevent recurrence; a description of the injury and name and location of the medical facility giving examination and treatment; and a statement as to whether or not the employee was permitted to return to work after examination and treatment by the doctor, and if not, an estimate or statement of the number of days lost from work. If there have been days lost from work, state whether or not the employee has been re-examined and declared fit to resume work as of the date of the report.

8.3 Accident Follow Up

The SSHO will obtain a doctor's first report of injury for every injury or illness requiring medical treatment and will immediately forward the report to the CHSM

An injured worker is not allowed back to work until a return-to-work notice issued by the treating physician and negative drug and alcohol test documentation (as applicable) are presented to the SSHO. Any injured worker issued a work restriction will be under the direct supervision of the SSHO and will be assigned work activities within the restriction until a full duty status clearance has been received

The CHSM will make a telephone report for all claims covered under the CAPE Workers’ Compensation Policy. Reports are made to the workers’ compensation insurance claim-reporting center where an employer’s first report of injury or illness form is completed over the phone. After reporting a claim to the reporting center, the information is faxed by the reporting center to the claims service office to handle the claim. Any subsequent medical bills and reports received for the claim are forwarded to the CHSM who will subsequently mail them to the claims service office

When a worker returns to work after an injury or illness, the CHSM will contact the claims servicing office to advise them of the actual date of return to work. Questions or inquires are to be directed to the CHSM who will contact the claims service office or the CAPE insurance company, as needed

The CHSM records each injury or illness on the OSHA Form No. 300 "Log of Work Related Injuries and Illnesses" and the OSHA Form 300A "Summary of Work-Related Injuries and Illnesses." The OSHA 300 form is posted annually no later than February 1 (of the following year) and is kept posted for 3 months (until April 30).

8.4 Monthly Exposure Report

During the project, CAPE will provide project hours worked and project injury and illness information to the COR on a monthly basis. Incident investigation reports and an updated project OSHA 300 log will be provided to the COR should an injury or illness occur.

9.0 PLANS REQUIRED BY THE SAFETY MANUAL

This section of the APP contains information specified in EM 385-1-1, Appendix A, Section 9 "Plans (Programs, Procedures) Required by the Safety Manual." The CAPE plans and procedures that are required by EM 385-1-1 (as applicable) are reviewed below.

- Layout Plans for Temporary Structures (04.A.01)
- Emergency Response Plan: Procedures and Tests (01.E.01)
- Emergency Response Plan: Spill Plans (01.E.01, 06.A.02)
- Emergency Response Plan: Firefighting Plan (01.E.01, Section 19)
- Emergency Response Plan: Posting of Emergency Telephone Numbers (01.E.05)
- Emergency Response Plan: Man Overboard/Abandon Ship (19.A.04)
- Emergency Response Plan: Medical Support (03.A.02; 03.D)
- Plan for Prevention of Alcohol and Drug Abuse (01.C.02)
- Site Sanitation Plan (Section 02)
- Access and Haul Road Plan (4.B)
- Respiratory Protection Program (05.G)
- Health Hazard Control Program (06.A)
- Hazard Communication Program (06.B.01)
- Process Safety Management Plan (06.B.04)
- Lead Abatement Plan (06.B.05 and specifications)
- Asbestos Abatement Plan (06.B.05 and specifications)
- Radiation Safety Program (06.E.03.a)
- Abrasive Blasting (06.H.01)
- Heat/Cold Stress Monitoring Plan (06.I.02)
- Crystalline Silica Monitoring Plan (assessment) (06.M)
- Night Operations Lighting Plan (07.A.08)
- Fire Prevention Plan (09.A)
- Wild Land Fire Management Plan (09.K)
- Hazardous Energy Control Plan (12.A.01)
- Critical Lift Plan (16.H)

- Contingency Plan for Severe Weather (19.A.03)
- Float Plan (19.F.04)
- Site-Specific Fall Protection and Prevention Plan (21.C)
- Demolition Plan (to include engineering survey (23.A.01)
- Excavation/Trenching Plan (25.A.01)
- Emergency Rescue: Tunneling (26.A)
- Underground Construction Fire Prevention and Protection Plan (26.D.01)
- Compressed Air Plan (26.I.01)
- Formwork and Shoring Erection and Removal Plans (27.C)
- Pre-Cast Concrete Plan (27.D)
- Lift Slab Plans (27.E)
- Steel Erection Plan (27.F.01)
- Site Safety and Health Plan for HTRW work (28.B)
- Blasting Safety Plan (29.A.01)
- Diving Plan (30.A.13)
- Confined Space Program (34.A).

9.1 Layout Plans for Temporary Structures

Not applicable.

9.2 Emergency Response Plan: Procedures and Tests

SSHP Section 9 "Emergency Response Plan" details CAPE project emergency response plans. Emergency procedures and tests including: emergency services and personnel, emergency supplies, site and emergency communications, emergency hospital and route information, medical emergency incident response, fire or explosion incident response, chemical spill incident response, and incident reporting to the COR are reviewed.

9.3 Emergency Response Plan: Spill Plans

SSHP Section 9.6 "Response to Chemical Spill Incident" reviews CAPE plans to respond to chemical spill emergencies.

9.4 Emergency Response Plan: Firefighting Plan

SSHP Section 9.5 "Response to Fire Incident" reviews CAPE plans to respond to fire emergencies.

9.5 Emergency Response Plan: Posting of Emergency Telephone Numbers

SSHP Section 9.1 "Site and Emergency Communications" reviews CAPE requirements for posting of emergency telephone numbers, emergency hospital information, and the emergency hospital route. An Emergency Contact List is provided as Attachment 2 of the SSHP. An Emergency Hospital and Route map is provided as Figure 1 of the SSHP.

9.6 Emergency Response Plan: Man Overboard/Abandon Ship

Not applicable.

9.7 Emergency Response Plan: Medical Support

SSHP Section 9.7 "Response to Medical Emergency Incident" reviews CAPE plans to respond to medical emergencies. A list of designated qualified first-aid/CPR personnel (see SSHP Attachment 4) will be posted the posted by the first-aid station in the project office or maintained by the SSHO.

9.8 Plan for Prevention of Alcohol and Drug Abuse

SSHP Section 11.2 "Drug and Alcohol Testing" reviews CAPE procedures for drug and alcohol testing.

9.9 Site Sanitation Plan

SSHP Section 8.2.6 "Sanitation" and SSHP Section 8.2.7 "Housekeeping" reviews CAPE sanitation and housekeeping procedures.

9.10 Access and Haul Road Plan

Not applicable.

9.11 Respiratory Protection Plan

SSHP Section 6.4 "Respiratory Protection" reviews CAPE respiratory protection requirements.

9.12 Health Hazard Control Program

SSHP Section 3.1 "Chemical Hazards", SSHP Section 4.0 "Exposure Monitoring", SSHP Section 6.0 "Personal Protective Equipment", and referenced chemical hazard information and exposure monitoring plan tables review the CAPE health hazard assessment and air monitoring plans for the project.

9.13 Hazard Communication Program

SSHP Section 8.2.2 "Hazard Communication" reviews basic CAPE hazard communication procedures. The SSHO will maintain a hazardous substance inventory list and copies of MSDSs for hazardous substances to be used during project work. Site personnel will be informed of the hazardous substances they will be working with through APP review and attendance at daily safety meetings. The CAPE "Hazard Communication Program" SOP shall be referred to for guidance and requirements. Key elements of the SOP are reviewed below.

9.13.1 General Hazard Communication Requirements:

The OSHA "Hazard Communication" regulation (29 CFR 1910.1200) is commonly referred to as the "Right to Know" or "HazCom" standard. The purpose of the regulation is to ensure that the hazards of chemicals produced or imported are evaluated and that information concerning their hazards is transmitted to employers and employees. This information is to be transmitted by means of comprehensive hazard communication programs, which include container labeling and other forms of warning, MSDSs and employee training.

Employee hazard communication rights include: the right to personally receive information regarding hazardous substances to which the employee may be exposed; the right for the employee's physician or collective bargaining agent to receive such information; and the right of protection against discharge or discrimination due to employee's exercise of rights provided by the Hazardous Substance Information and Training Act.

The scope of the hazard communication standard applies to chemical manufacturers or importers, chemical distributors, and employers. Chemical manufacturers or importers must assess the hazards of chemicals that they produce or import. Chemical distributors must transmit required information to employers. Employers must provide information to employees about the hazardous chemicals to which they are exposed. For general construction work activities, hazard communication requirements apply to the any chemical that is known to be present in the workplace in such a manner that employees may be exposed under normal conditions of use or in a foreseeable emergency.

Hazard determination requirements exist for chemical manufacturers, importers, and employers. Chemical manufacturers and importers must evaluate chemicals produced in their workplaces or imported by them to determine if they are hazardous. Employers are not required to evaluate chemical hazards unless they choose <u>not</u> to rely on the evaluation performed by the chemical manufacturer or importer.

9.13.2 Written Hazard Communication Program:

The employer must develop, implement, and maintain at each workplace, a written hazard communication program (where employees travel between workplaces during a work shift the written program may be kept at the primary workplace facility). This written program must: Describe labels and other forms of warning, MSDSs, and employee information and training; Provide a list of hazardous chemicals known to be present; Identify methods used to inform employees of the hazards of non-routine tasks; and identify hazards associated with chemicals contained in unlabeled pipes in work areas.

At multi-employer workplaces the written program must identify methods to provide affected employees of other employers who may be exposed with hazard communication information (i.e., MSDS provision, precautionary measures; and labeling system used).

9.13.3 Labels and Other Forms of Warning:

Chemical manufacturers, importers, distributors, and employers must use labels and other forms of hazard warnings. They must revise these labels within 3 months when they become newly aware of any significant information regarding the hazards of a chemical.

Chemical manufacturers, importers, distributors, and employers:

- Ensure that each container of hazardous chemicals leaving the workplace is labeled, tagged or marked with the identity of the hazardous chemical, appropriate hazard warnings, and name and address of the chemical manufacturer, importer, or other responsible party
- Ensure that labels and other forms of warning do not conflict with those required by the DOT Hazardous Materials Transportation Act
- Ensure that labels and other forms of warning are in accordance with those required by an OSHA substance-specific health standard
- Can use appropriate hazard warnings, or alternatively, words, pictures, symbols, or a combination, to provide general information regarding chemical hazards as long as other specific information is immediately available
- Can use signs, placards, process sheets, batch tickets, operating procedures, or other such written materials instead of affixing labels to individual stationary process containers, as long as the alternative method identifies the containers to which it is applicable and conveys the required label information
- Are not required to label portable containers into which chemicals are transferred from labeled containers, which are intended only for the immediate use of the employee who performs the transfer
- Must not remove or deface existing labels on incoming containers of hazardous chemicals, unless the container is immediately remarked with the required information
- Must ensure that labels and other forms of warning are legible, in English, and prominently displayed on the container, or readily available in the work area throughout the work shift (can add other languages to English on label).

9.13.4 Material Safety Data Sheets:

MSDSs are a key tool in providing chemical hazard warnings to employees. Chemical manufacturers and importers must obtain or develop a MSDS for each hazardous chemical they produce or import. Employers must have a MSDS in the workplace for each hazardous chemical which they use.

Each MSDS must be in English and contain the following information regarding the hazardous chemical: identity used on the label (chemical and common name of hazardous ingredients); physical and chemical characteristics (vapor pressure; flash point); physical hazards (fire; explosion; reactivity data); health hazards (signs and symptoms of exposure, medical conditions that can be aggravated by exposure); primary routes of

entry; OSHA PEL, American Conference of Governmental Industrial Hygienists (ACGIH) Threshold Limit Value (TLV), or other exposure limit used or recommended; listing as a potential carcinogen; precautions for safety handling and use (hygienic practices, spill cleanup); control measures (engineering controls, work practices, PPE); emergency and first-aid procedures; date of MSDS preparation; and the name, address and phone number of the chemical manufacturer, importer, employer or other responsible party preparing or distributing the MSDS and who can provide additional information, if necessary.

The chemical manufacturer or importer must provide an MSDS with their initial shipment and with the first shipment after an MSDS is updated. The MSDS must be provided with the shipped containers or be sent to the distributor or employer prior to or at the time of shipment. The MSDS must be provided to distributors or employers upon request. Where employees must travel between workplaces during a work shift, the MSDSs may be kept at the primary workplace facility provided that the required information can be immediately obtained in an emergency.

9.13.5 Hazard Communication Training:

Employees must be provided with effective hazard communication information and training on the hazards of chemicals present in their work area. Training must be provided at the time of initial assignment and whenever a new physical or health hazard, that employees have not previously been trained about, is introduced into the work area. Information and training may be designed to cover categories of hazards (e.g., flammability, carcinogenicity) or specific chemicals.

Employee information and training requirements include:

- Review of the OSHA hazard communication regulation requirements
- Review of operations in work areas where hazardous chemicals are present
- Location and availability of the written hazard communication program
- Discussion of the methods and observations to detect hazardous substances in work areas
- Description of the physical and health hazards of hazardous substances and protective measures to be used
- Review of the details of hazard communication program and how to obtain and use hazard warning information including MSDSs and labels and other forms of warning.

9.14 Process Safety Management Plan

Not applicable.

9.15 Lead Abatement Plan

A Lead Hazard Compliance Plan (LHCP) will be prepared as a separate submittal for lead-related work activities. The LHCP will be prepared to meet the requirements of the 29 CFR 1926.62 OSHA "Lead" regulation and project specification requirements.

9.16 Asbestos Abatement Plan

An Asbestos Hazard Abatement Plan (AHAP) will be prepared as a separate submittal for asbestos-related work activities. The AHAP will be prepared to meet the requirements of the 29 CFR 1926.1101 OSHA "Asbestos" regulation and project specification requirements.

9.17 Radiation Safety Program

Not applicable.

9.18 Abrasive Blasting

Not applicable.

9.19 Heat/Cold Stress Monitoring Plan

SSHP Section 3.2.10 "Heat Stress" and SSHP Section 3.2.11 "Cold Stress" reviews CAPE heat and cold stress procedures.

9.20 Crystalline Silica Monitoring Plan (Assessment)

Not applicable.

9.21 Night Operations Lighting Plan

Not applicable.

9.22 Fire Prevention Plan

SSHP Section 3.2.1 "Fire Protection and Hot Work" reviews CAPE fire prevention procedures. Emergency fire procedures are also reviewed in the emergency response plan section of the SSHP.

Fire prevention plan procedures are reviewed below.

The fire prevention plan for the site must include a list of the major workplace fire hazards; potential ignition sources; the types of fire suppression equipment or systems appropriate to the control of fire; assignments of responsibilities of maintaining the equipment and systems; personnel responsible for controlling the fuel source hazards; and housekeeping procedures, including the removal of waste materials. This information shall be used to brief employees and emergency first responders on the fire hazards, the

material and processes to which they are exposed, and the emergency evacuation procedures.

Fire Hazards: Combustible materials (wood, paper) and brush at the site. Flammable compressed gases for hot work (oxygen, acetylene).

Potential Ignition Sources: Operation of fuel-operated equipment (heavy equipment, generator, pressure washer). The potential for use of flammable gases (oxygen, acetylene) should torch cutting be needed.

Fire Suppression/Control Equipment: Multiple multi-purpose ABC fire extinguishers will be maintained at the site. Fire extinguishers will be positioned near fueling areas and at hot work locations. Heavy equipment will be equipped with fire extinguishers. An onsite water source will be identified should it be needed for fire control.

Personnel Responsible for Fuel Source Hazard Control: The SSHO is responsible for contacting the local fire service to advise them of site activities, solicit their support, and to offer an on-site orientation to the fire-safety aspects of the project work. The Site Superintendent and SSHO are responsible for fuel source hazard control. The SSHO will conduct inspections prior to hot work and prepare/issue a hot work permit for any spark- or flame-producing activities. For hot work operations, a fire watch is responsible for monitoring hot work operations and taking actions to prevent a fire. The fire watch will have a fire extinguisher readily available to put out a small fire should one occur. The fire watch will stay in the area of the hot work for a minimum period of 30 minutes following the completion of hot work to monitor for any hot spots.

Fire Prevention Safe Work Practices: Smoking is allowed only in designated smoking areas. The SSHO will survey activities and determine activities that require a hot work permit. Fires and open flame devices shall not be left unattended. Sources of ignition shall be prohibited within 50 feet of operations with a potential fire hazard. Fire hazard areas shall be conspicuously and legibly posted "No Smoking, Matches or Open Flame." Smoking is prohibited in area where flammable, combustible or oxidizing materials are stored. Portable multipurpose fire extinguishers must be maintained on site at all times, kept fully charged, inspected monthly, and serviced annually. Fire extinguishers are to be placed within 75 feet of active work areas where flammable or combustible materials are present. OSHA-approved metal safety cans, painted red with a yellow stripe, that have self-closing lids and flame arrestors must be used to store small quantities of flammable liquids. Static electricity-generating equipment requires bonding and grounding whenever transferring flammable or combustible liquids or when working in areas where these materials are present.

Hot Work Procedures: Use of equipment that uses open flames or creates sparks requires implementation of hot work procedures. Hot work is not allowed without approval by the SSHO and completion of a Hot Work Permit. A combustible gas indicator is used to determine if combustible vapors or gases exceed 10 percent of the LEL before hot work in areas where flammable or combustible materials may be present. Hot work must be conducted under a fire watch with a dry chemical fire extinguisher, or equivalent. Hot

work personnel should wear protective clothing (i.e., leather chaps, jacket) for protection from metal slag and sparks and eye protection with filtered lenses.

Response to Fire Incident: The SSHO will consult with the local fire department before initiating site activities regarding response to jobsite fire incidents. In the event of a large fire (beyond the immediate control of a small onsite fire extinguisher); the site alarm will be sounded; personnel will immediately evacuate and assemble at a predetermined upwind site location; the fire department will be called; and personnel will not reenter the fire area and will wait for fire department arrival and instructions from project supervision. In the event of a small fire (within the immediate control of a small onsite fire extinguisher); the site alarm will be sounded; trained personnel will use an onsite fire extinguisher to put out the fire.

Compressed Fuel Gases: Compressed fuel gas cylinders (i.e., oxygen, acetylene) must be protected from physical damage, electric current, and temperature extremes (storage below 130ºF required). Smoking is prohibited is areas of compressed gas cylinder storage or use. Compressed gas cylinders must not be stored or used in confined spaces or other poorly ventilated areas. Compressed gas cylinders must be stored in well-ventilated areas; segregated by type of gas; area placarded and/or with signage; empty/full cylinders separated; upright position; valve closed and valve cap installed (unless regulator in place); substantially secured by chain or rope; separated from flammable or combustible materials by a 40-foot distance or 1-hour fire-rated partition; and with oxygen and/or oxidizing gases separated from fuel gas cylinders by a 20-foot distance or a 1-hour fire-rated partition.

Housekeeping Procedures: Standard housekeeping rules related to fire prevention must be implemented. Storage and construction sites must be kept free from combustible material accumulation. Weeds and grass must not be allowed to become overgrown such that it becomes a fire or housekeeping hazard. Rubbish, brush, long grass, or other combustible matter must be kept from areas where combustible or flammable liquids are stored, handled, or processed. Liquids, particularly combustible or flammable liquids, must not be allowed to accumulate on floors, walls, etc. All spills of combustible or flammable liquids must be immediately cleaned up.

Fire Extinguisher Training: The SSHO shall instruct site personnel on the basics of fire extinguisher use (fire classifications, extinguisher types, inspection, servicing, proper use). The SSHO will review the PASS system for fire extinguisher use. “P” Pull the pin; “A” Aim the nozzle at the base of the flames; “S” Squeeze the trigger; and “S” Sweep at the base of the flames.

9.23 Wild Land Fire Management Plan

Not applicable.

9.24 Hazardous Energy Control Plan

This section of the APP reviews hazardous energy control plans. The CAPE “Lockout/Tagout Program” SOP shall be referred to for guidance and requirements.

Electrical equipment use on site requires positive control of hazardous energy during servicing and maintenance of equipment where unexpected energization, startup of equipment, or release of stored energy could occur.

Personnel must ensure that electrical power tools, lighting equipment, etc., that are to be used have ground plugs and are plugged into ground outlets or extension cords. Plugs are not to be altered or used incorrectly (such as the addition of non-grounded plug adapters).

Personnel must use Ground-Fault Circuit Interrupters (GFCIs) in conjunction with extension cords, or implement an assured equipment grounding conductor program.

Energy sources for equipment must be turned off or disconnected and switches locked out and tagged out before servicing of equipment. Standardized locks and tags are to be used to indicate the identity of the individual using them. Each lockout/tagout device is required to be removed by the individual who applied the device.

9.25 Critical Lift Procedures

Not applicable.

9.26 Contingency Plan for Severe Weather

SSHP Section 3.2.13 "Inclement Weather and Adverse Environmental Conditions" reviews CAPE contingency plans for severe weather.

9.27 Float Plan

Not applicable.

9.28 Site-Specific Fall Protection and Prevention Plan

SSHP Section 3.2.12 "Elevated Work Locations and Fall Protection" reviews CAPE fall protection procedures for protection from exposures to fall hazards. The CAPE "Fall Protection Program" SOP shall be referred to for guidance and requirements.

9.29 Demolition Plan (to include engineering survey)

Not applicable.

9.30 Excavation/Trenching Plan

Excavation operations may involve personnel entry into trenches or excavations. Information is provided in SSHP Section 3.2.5 to ensure communication of hazards related to excavation and trench safety.

9.31 Emergency Rescue: Tunneling

Not applicable.

9.32 Underground Construction Fire Prevention and Protection Plan

Not applicable.

9.33 Compressed Air Plan

Not applicable.

9.34 Formwork and Shoring Erection and Removal Plan

Formwork, shoring, and bracing must be designed, fabricated, erected, supported, braced, and maintained so that it will safely support all vertical and lateral loads that might be applied until such loads can be supported by the structure.

The CAPE subcontractor selected to perform formwork and shoring erection and removal will develop a Formwork and Shoring Erection and Removal Plan to meet EM 385-1-1; 27.B.02 requirements. CAPE will submit this plan to the COR/GDA (Government Designated Authority) for review and acceptance prior to installation of formwork and shoring.

9.35 Pre-Cast Concrete Plan

Not applicable.

9.36 Lift Slab Plans

Not applicable.

9.37 Steel Erection Plan

Not applicable.

9.38 Site Safety and Health Plan for HTRW Work

A detailed SSHP, designed to meet OSHA 29 CFR 1910.120 and 1926.65 "Hazardous Waste Operations and Emergency Response" and EM 385-1-1 Section 28(B) requirements, has been prepared for this project (see Appendix B).

9.39 Blasting Safety Plan

Not applicable.

9.40 Diving Plan

Not applicable.

9.41 Confined Space Program

Not applicable.

10.0 RISK MANAGEMENT PROCESSES

This section of the APP contains information specified in EM 385-1-1, Appendix A, Section 10 "Risk Management Processes." A detailed review of project-specific hazards and safety control measures are provided in the AHAs (see SSHP Attachment 6) for each major phase/activity of work.

APPENDIX A

RESUMES FOR SHM AND SSHO

APPENDIX A

GLEN MAYEKAWA, CIH
SAFETY AND HEALTH MANAGER

PROFESSIONAL QUALIFICATIONS
A Certified Industrial Hygienist (CIH) with a graduate degree and more than 30 years of experience in the comprehensive practice of occupational health and safety (H&S).

EDUCATION
- MS, Environmental & Occup. Health, California State University, Northridge, CA, 1979
- BS, Environmental & Occup. Health, California State University, Northridge, CA, 1977.

CERTIFICATIONS AND TRAINING
- Certified Industrial Hygienist, Comprehensive Practice, ABIH, #5780
- Certified Lead Const. Inspector-Assessor/Project Monitor/Project Designer, CDPH, #1549
- Certified Asbestos Consultant, Cal-OSHA, #93-1007 (2010)
- AHERA Asbestos Contractor/Supervisor; Building Inspector and Management Planner (2010)
- 40-Hour HAZWOPER Equivalent Training (1989) and current refresher training (2010)
- 8-Hour HAZWOPER Manager/Supervisor Training (1989, 1997)
- OSHA 500 Construction Safety and Health (S&H) Trainer course (2002, 2008)
- First-Aid (2006)/CPR Training (2008) and Bloodborne Pathogen Training (2003)
- Excavation Safety Training (1993); Confined Space Training (1999)
- Fall Protection Competent Person (2009); Flagger Training (2009)
- DOT Hazardous Materials Training (2007)
- Construction Quality Management for Contractors training (2007).

EXPERIENCE AND BACKGROUND
- Provided technical assistance/S&H support for construction & hazardous waste projects
- Directed and supervised project Site S&H Officers (SSHOs)
- Prepared Site S&H Plans (SSHPs) for hazardous waste site operations
- Supervised confined space entry, excavation, and emergency response operations
- Experienced and certified in multiple disciplines for asbestos and lead management
- Conducted daily safety meetings and monthly supervisor safety meetings
- Performed safety inspections/audits and conducted incident investigations
- Established required levels of protection for site personnel for site activities
- Performed calibration and maintenance of air monitoring instruments
- Conducted worker exposure monitoring for chemical and physical agents
- Instructed S&H training for hazardous waste, respiratory protection, PPE, HazCom, etc.
- Developed SOPs and managed medical, OSHA recordkeeping, and other S&H programs.

EMPLOYMENT HISTORY
CAPE: Corporate H&S Manager (2002-present); Regional Safety Manager (2000-2002)
CET Environmental Services: Corporate H&S Manager (1995-2000); Sr. IH (1993-1995)
Jacobs Engineering Group: H&S Manager (1994-1995)
EnviroHealth: Senior Industrial Hygienist (1989-1993)
IT Corporation: Regional H&S Manager (1983-1989); H&S Coordinator (1979-1983).

APPENDIX A

ROBERT C. LANDLE
SITE SAFETY AND HEALTH OFFICER

PROFESSIONAL QUALIFICATIONS
A health and safety (H&S) professional with more than 25 years of experience in safety supervision of construction and environmental remediation projects.

EDUCATION
- BS, Geology, York College, City University of New York, NY, 1980.

CERTIFICATIONS AND TRAINING
- 40-Hour HAZWOPER worker training (1985)
- 8-Hour HAZWOPER manager and supervisor training (1989)
- 8-Hour HAZWOPER refresher training (2006)
- 30-Hour OSHA S&H training (2005)
- 10-Hour OSHA construction S&H training (2005)
- First-aid and CPR training (2005)
- Bloodborne pathogen training (2006)
- Excavation safety training (2006)
- Confined space training (2003)
- 8-Hour SSHO Training (2006)
- USACE Construction Quality Management for Contractors training (2004).

EXPERIENCE AND BACKGROUND
- Provided H&S technical assistance for construction and hazardous waste projects
- Prepared Site S&H Plans (SSHPs) for hazardous waste site operations
- Functioned as SSHO for a wide range of construction and hazardous waste projects
- Supervised confined space entry and excavation operations
- Experienced in AST/UST removal and demolition operations
- Conducted daily safety meetings and monthly supervisor safety meetings
- Performed safety inspections and audits of site activities
- Conducted incident investigations and completed follow up documentation
- Established required levels of protection for site personnel for site activities
- Performed calibration and maintenance of air monitoring instruments
- Conducted worker exposure monitoring for lead, airborne dust, noise, etc.
- Instructed H&S training for confined space.

EMPLOYMENT HISTORY
CAPE: S&H Specialist (2006-present)
Conti Environment & Infrastructure: Site Safety Officer/Quality Controls Manager (2004-2006)
Yonkers Contracting Company: Safety Manager (2002-2003)
Groundwater & Environmental Services: Case Manager/Project Hydrogeologist (2001-2002)
Blasland, Bouck & Lee: Senior Project Geologist II (1998-2001)
Environmental Compliance and Control: Senior Project Manager (1996-1998)
IT Corporation: Project Manager (1989-1996)

New Jersey Department of Environmental Protection: Supervising Geologist (1985-1989)
Princeton Aqua Science.: Project Geologist (1984-1985)
Lewis of Woodhaven: Warehouse Supervisor (1982-1984)
Converse Consultants: Staff Geologist (1980-1981).

APPENDIX B

SITE SAFETY AND HEALTH PLAN

- REVISION 003 -

SITE SAFETY AND HEALTH PLAN

FOR

**REMEDIAL ACTION ACTIVITIES
AT THE EAST MAIN/WALL STREET
PLUME OF THE
ROCKAWAY BOROUGH WELL FIELD SUPERFUND SITE
MORRIS COUNTY, NEW JERSEY**

**Contract Number W912DQ-05-D-0001
Task Order Number 0005**

Prepared for:

**U.S. ARMY CORPS OF ENGINEERS
KANSAS CITY DISTRICT
601 East 12th Street, Room 410
Kansas City, Missouri 64106-2896**

Prepared by:

**180 Gordon Drive, Suite 102
Exton, Pennsylvania 19341**

CAPE Project Number: 50001.005

May 2011

SSHP SIGNATURE PAGE

CAPE

SITE SAFETY AND HEALTH PLAN

FOR

REMEDIAL ACTION ACTIVITIES
AT THE EAST MAIN/WALL STREET
PLUME OF THE
ROCKAWAY BOROUGH WELL FIELD SUPERFUND SITE
MORRIS COUNTY, NEW JERSEY

Contract Number W912DQ-05-D-0001
Task Order Number 0005

U.S. ARMY CORPS OF ENGINEERS
KANSAS CITY DISTRICT
601 East 12th Street, Room 410
Kansas City, Missouri 64106-2896

May 2011

Prepared by:

Glen Mayekawa, CIH
Certified Industrial Hygienist
(714) 599-9071

This Site Safety and Health Plan has been prepared to meet the requirements of: Occupational Safety and Health Administration standards, 29 CFR Part 1910 and 29 CFR Part 1926; U.S. Army Corps of Engineers "Safety and Health Requirements Manual" requirements (EM 385-1-1); and the U.S. Army Corps of Engineers, Kansas City District, Scope of Work entitled: *Remedial Action Activities at the East Main/Wall Street (EM/WS) Plume of the Rockaway Borough Well Field Superfund Site, Morris County, New Jersey*, dated 3 May 2006 and revised 7 June 2010

SSHP APPROVAL PAGE

CAPE
SITE SAFETY AND HEALTH PLAN

FOR

REMEDIAL ACTION ACTIVITIES
AT THE EAST MAIN/WALL STREET
PLUME OF THE
ROCKAWAY BOROUGH WELL FIELD SUPERFUND SITE
MORRIS COUNTY, NEW JERSEY

Contract Number W912DQ-05-D-0001
Task Order Number 0005

U.S. ARMY CORPS OF ENGINEERS
KANSAS CITY DISTRICT
601 East 12th Street, Room 410
Kansas City, Missouri 64106-2896

APPROVAL: SITE SAFETY AND HEALTH PLAN

The following key CAPE and subcontracted project personnel have reviewed and have agreed to implement and comply with requirements of the Site Safety and Health Plan established by CAPE for the above-indicated contract and specified work activities.

TITLE	NAME	SIGNATURE	DATE
VP and Business Unit Leader	Christopher Karg		05/10/2011
Project Manager	David Bettendorf, PG		05/10/2011
Site Superintendent	Charlie McNeil		05/10/2011
Site Safety and Health Officer	Robert Landle, PG		05/10/2011
Safety and Health Manager	Glen Mayekawa, CIH		05/10/2011

CONCURRENCE: SITE SAFETY AND HEALTH PLAN

TITLE	NAME	SIGNATURE	DATE
Corporate Health and Safety Manager	Glen Mayekawa, CIH		05/10/2011

TABLE OF CONTENTS

Section ***Page***

LIST OF ABBREVIATIONS AND ACRONYMS vi

1.0 BACKGROUND 1
- 1.1 Site Location 2
- 1.2 Site Background 2
- 1.3 Scope of Work 3

2.0 PROJECT ORGANIZATION 4
- 2.1 Key Project Personnel 4
- 2.2 CAPE Personnel Health and Safety Responsibilities 5
  - 2.2.1 Project Manager 5
  - 2.2.2 Site Superintendent 5
  - 2.2.3 Site Safety and Health Officer 5
  - 2.2.4 Asbestos Competent Person 6
  - 2.2.5 Lead Competent Person 6
  - 2.2.6 Safety and Health Manager 7
  - 2.2.7 Subcontractors 7
  - 2.2.8 Site Personnel 8

3.0 SITE HAZARDS 8
- 3.1 Chemical Hazards 8
  - 3.1.1 Trichloroethene 9
  - 3.1.2 Hazardous Substances with Anticipated Use at the Site 9
- 3.2 Physical Hazards 9
  - 3.2.1 Fire Protection 11
  - 3.2.2 Overhead Utilities 12
  - 3.2.3 Underground Utilities 13
  - 3.2.4 Heavy Equipment Operation 13
  - 3.2.5 Excavation and Trench Safety 14
  - 3.2.6 Vehicle and Equipment Traffic Control 17
  - 3.2.7 Material Handling 17
  - 3.2.8 Tools, Machinery, and Equipment Use 18
  - 3.2.9 Electrical Equipment 19
  - 3.2.10 Lockout/Tagout 20
  - 3.2.11 Noise Exposure 20
  - 3.2.12 Elevated Work Locations and Fall Protection 20
  - 3.2.13 Heat Stress 21
  - 3.2.14 Cold Stress 21
  - 3.2.15 Ladder Safety 22
  - 3.2.16 Hoisting and Rigging 22
  - 3.2.17 Inclement Weather and Adverse Environmental Conditions 24
  - 3.2.18 Miscellaneous Physical Hazards 25
- 3.3 Biological Hazards 25
  - 3.3.1 Poisonous Plants 26
  - 3.3.2 Venomous Snakes 26
  - 3.3.3 Venomous Spiders 27
  - 3.3.4 Rodents 27

Section *Page*

3.3.5 Insects ... 27
3.4 Radiological Hazards ... 28
3.5 Ordnance and Explosives Hazards ... 28
3.6 Dust Control ... 28
3.7 Activity Hazard Analyses ... 28

4.0 EXPOSURE MONITORING ... 29
4.1 Air Contaminants ... 29
4.2 Exposure Monitoring Plan ... 29
4.2.1 Volatile Organic Compounds ... 29
4.2.2 Asbestos ... 30
4.2.3 Lead ... 31
4.3 Physical Hazard Monitoring ... 33
4.3.1 Heat Stress Monitoring ... 33

5.0 SITE CONTROL ... 34
5.1 Site Work Zones ... 34
5.1.1 Exclusion or Hot Zone ... 34
5.1.2 Contamination Reduction Zone ... 35
5.1.3 Support Zone ... 35
5.1.4 Location of Site Work Zones ... 35
5.2 Site Control Log ... 35
5.3 Site Communications ... 35
5.4 Site Security ... 35

6.0 PERSONAL PROTECTIVE EQUIPMENT ... 36
6.1 PPE Requirements ... 36
6.2 Levels of Protection for Major Work Tasks ... 37
6.3 Levels of Protection Description ... 39
6.3.1 Level C Protection ... 39
6.3.2 Modified-Level D Protection ... 39
6.3.3 Level D Protection ... 39
6.4 Respiratory Protection ... 40
6.4.1 Respirator General Use Procedures ... 40
6.4.2 Respirator Cleaning ... 41
6.4.3 Respirator Maintenance ... 42
6.4.4 Respirator Change-Out Schedules ... 42
6.4.5 Respirator Storage ... 42
6.4.6 Defective Respirators ... 42
6.5 PPE Maintenance ... 43

7.0 DECONTAMINATION ... 43
7.1 Personnel Decontamination ... 43
7.1.1 Dry Decontamination Procedures ... 43
7.1.2 Decontamination Procedures – Wet Method ... 44
7.2 Equipment Decontamination ... 44
7.2.1 Equipment Decontamination Facilities and Procedures ... 45

TABLE OF CONTENTS

Section ***Page***

8.0 GENERAL WORK PRACTICES 45
8.1 Safety Policy 45
8.2 Standard Work Procedures 46
8.2.1 General Safe Work Practices 46
8.2.2 Hazard Communication 46
8.2.3 Reporting of Hazards and Safety Inspections 46
8.2.4 Visitors 46
8.2.5 Illumination 46
8.2.6 Sanitation 47
8.2.7 Housekeeping 47
8.2.8 Safety Inspections 48
8.2.9 Incident Reporting and Investigation 48
8.2.10 Safety Rule Enforcement 50
8.3 Standard Operating Procedures 51
8.4 Site-Specific Procedures 52
8.4.1 Permits 52

9.0 EMERGENCY RESPONSE PLAN 52
9.1 Site and Emergency Communications 52
9.2 Emergency Supplies 53
9.3 Emergency Hospital and Route Information 53
9.4 Emergency Evacuation Procedures 53
9.5 Response to Fire Incident 53
9.6 Response to Chemical Spill Incident 54
9.7 Response to Medical Emergency Incident 54

10.0 TRAINING 55
10.1 Preconstruction Safety Conference 55
10.2 HazWOPER Training 55
10.3 Site Orientation Briefing 55
10.4 Safety Meetings 56
10.5 Monthly Supervisor Safety Meetings 56
10.6 First-Aid/CPR Training 56
10.7 30-Hour OSHA Construction Safety and Health Training 56
10.8 Asbestos Training 57
10.9 Lead Training 58

11.0 MEDICAL SURVEILLANCE 58
11.1 Medical Examinations and Reports 58
11.2 Drug and Alcohol Testing Program 59

12.0 RECORDKEEPING 59
12.1 Health and Safety Documentation 59
12.2 Site Safety and Health Plan Forms 60

TABLE OF CONTENTS

FIGURES
1 Emergency Hospital Route Map
2 Site Location and Work Area Map

TABLES
1 Chemical Hazard Information
2 Exposure Monitoring Plan

ATTACHMENTS
1 Site Safety and Health Plan Forms
- Accident Prevention Plan Review
- Activity Hazard Analysis Preparatory Phase Training Log
- Airborne Dust Monitoring Log
- Air Monitoring Log
- Calibration Log: Direct-Reading Monitoring Instrument
- Certificate of Worker/Visitor Acknowledgment
- Emergency Medical Notification Form
- Equipment Decontamination Release Authorization
- Hazardous Substance Inventory List
- Heavy Equipment Inspection Report
- Incident Reporting and Investigation Procedures
- Incident Report by Supervisor
- Incident Statement by Employee
- Incident Statement by Witness
- Injury and Illness Report
- Property Damage, Loss and General Liability Report
- Safety and Occupational Health Deficiency Tracking List
- Safety Inspection Report
- Safety Meeting Attendance Roster
- Site Control Log
- Site Safety and Health Plan Change Approval Form
- Site Safety and Health Plan Distribution to Subcontractor
- Site Safety and Health Plan Review
- Tailgate Safety Meeting Record
- Training Attendance Roster
- Vehicle Accident Report
- USACE ENG 3394 Accident Investigation Report

2 Emergency Contact List
- Emergency Contact List

3 List of Subcontractors
- List of Subcontractors

TABLE OF CONTENTS

4 List of Designated First-Aid Responders
- List of Designated First-Aid Responders

5 List of Designated Competent Persons
- List of Designated Competent Persons

6 Activity Hazard Analyses
- Mobilization and Site Preparation & Surveying
- Extraction Well (EW)/ Monitoring Well (MW) Installation
- Aquifer Pump Testing; GTS Start-Up & Performance Testing
- Monitoring Well and Boring Abandonment
- Pipe Trenching and Installation; GTS Water Supply Piping
- Building Demolition
- Groundwater Well Pump – 1 Temporary Bypass
- Groundwater Well Sampling
- GTS Equipment Installation, Electrical Installation & Supervisory Control and Data Acquisition System Installation
- GTS Building and Pump House Construction; Concrete Reinforcement and Formwork; & Concrete Mixing, Placement, Curing and Finishing
- Excavation, Grading and Backfilling for Flood Storage Creation
- Transportation and Disposal of Waste/Spoils
- Site Restoration and Demobilization

LIST OF ABBREVIATIONS AND ACRONYMS

ACGIH	American Conference of Governmental Industrial Hygienists
ACM	asbestos-containing material
AHERA	Asbestos Hazard Emergency Response Act
AIHA	American Industrial Hygiene Association
AHA	Activity Hazard Analysis
ANSI	American National Standards Institute
APP	Accident Prevention Plan
APR	air-purifying respirator
bpm	beats per minute
CAPE	CAPE, Inc.
CFR	Code of Federal Regulations
CHSM	Corporate Health and Safety Manager
CIH	Certified Industrial Hygienist
CO	Contracting Officer
COC	contaminant of concern
COR	Contracting Officer's Representative
CP	competent person
CPR	cardiopulmonary resuscitation
CRZ	contamination reduction zone
CSP	Certified Safety Professional
dBA	decibels on the A-weighted scale
DOT	U.S. Department of Transportation
EM/WS	East Main/Wall Street
EM 385-1-1	USACE Safety and Health Requirements Manual EM 385-1-1
EPA	U.S. Environmental Protection Agency
eV	electron volt
EL	excursion limit
EZ	exclusion zone
EW	extraction well
ºF	degrees Fahrenheit
f/cc	fibers per cubic centimeter
GFCI	ground fault circuit interrupter
GTS	groundwater treatment system
HAZWOPER	hazardous waste operations and emergency response
HEPA	high-efficiency particulate air
HR	heart rate
IAW	in accordance with
kV	kilovolt
LBP	lead-based paint
LCP	lead-containing paint
LHCP	Lead Hazard Compliance Plan
LOTO	lockout/tagout
LPM	liters per minute
µm	micrometer
$\mu g/m^3$	micrograms per cubic meter
mg/m^3	milligrams per cubic meter
mm	millimeter

LIST OF ABBREVIATIONS AND ACRONYMS

MCE	mixed cellulose ester
MSDS	material safety data sheet
MW	monitoring well
NIOSH	National Institute for Occupational Safety and Health
NJDEP	New Jersey Department of Environmental Protection
OSHA	Occupational Safety and Health Administration
PAPR	powered air-purifying respirator
PCM	phase contrast microscopy
PE	Professional Engineer
PEL	permissible exposure limit
PID	photoionization detector
PM	Project Manager
POC	Point of Contact
PPE	personal protective equipment
ppm	parts per million
PVC	polyvinyl chloride
RCRA	Resource Conservation and Recovery Act
ROD	Record of Decision
S&H	safety and health
SHM	Safety and Health Manager
SOP	standard operating procedure
SOW	statement of work
SSHO	Site Safety and Health Officer
SSHP	Site Safety and Health Plan
STEL	short-term exposure limit
TBD	to be determined
TCE	trichloroethene
TEM	transmission electron microscopy
TLV	Threshold Limit Value
tsf	tons per square foot
TWA	time-weighted average
USACE	U.S. Army Corps of Engineers
VOC	volatile organic compound

1.0 BACKGROUND

This Site Safety and Health Plan (SSHP) presents the contractor safety and health (S&H) procedures to be implemented by CAPE, Inc. (CAPE) for services associated with the U.S. Army Corps of Engineers (USACE), Kansas City District, Remedial Action Activities at the East Main/Wall Street (EM/WS) Plume of the Rockaway Borough Well Field Superfund Site, Morris County, New Jersey project. CAPE project work will be conducted under a USACE Kansas City District contract (Contract Number W912DQ-05-D-0001; Task Order Number 0005).

The purpose of the SSHP is to identify and evaluate S&H hazards at the project worksite and to prescribe safety control measures to be implemented. The SSHP is implemented in conjunction with the project Accident Prevention Plan (APP) and CAPE S&H policies and procedures. This SSHP has been prepared to meet the requirements of: Occupational Safety and Health Administration (OSHA) standards, 29 Code of Federal Regulations (CFR) Part 1910 and 29 CFR Part 1926; USACE "Safety and Health Requirements Manual" (EM 385-1-1); and the USACE Kansas City District, Scope of Work entitled: *Remedial Action Activities at the East Main/Wall Street (EM/WS) Plume of the Rockaway Borough Well Field Superfund Site, Morris County, New Jersey*, dated 3 May 2006 and revised 7 June 2010.

This SSHP serves as the primary S&H guidance for CAPE operations necessary to accomplish project objectives. This SSHP:

- Provides background information related to the project
- Assigns responsibilities for SSHP implementation
- Identifies site hazards and hazard control measures
- Describes the exposure monitoring program
- Establishes requirements for site control and personal protective equipment (PPE)
- Discusses standard safety procedures and designates emergency response plans
- Reviews training, medical surveillance, and recordkeeping programs to be implemented.

The CAPE Project Manager (PM), Site Superintendent, Site Safety and Health Officer (SSHO), and Safety and Health Manager (SHM) primarily implement the SSHP in coordination with the USACE Contracting Officer's Representative (COR) and designated U.S. Environmental Protection Agency (EPA) Point of Contact (POC). Compliance with the SSHP is required of all CAPE personnel, subcontractors, and associated third parties on site. A copy of the SSHP will be maintained on site during work activities and will be available for inspection and review by site or agency personnel. Field personnel will review applicable aspects of the SSHP before site work and will sign an acknowledgment form (see Attachment 1 SSHP Forms) indicating that they have reviewed the pertinent aspects of the plan.

The contents of the SSHP may be revised and/or amended should additional information become available regarding the hazards present at the site and/or should significant changes occur in the scope of work, operational procedures, site hazards, and/or hazard control measures. The SSHP may be modified by the SSHO upon review and approval of the COR, PM, and SHM. Changes to the SSHP are documented on a SSHP Change Approval form. Field personnel are informed of changes to the SSHP through safety meetings and written addendum or revision to the SSHP.

1.1 Site Location

The Rockaway Borough Well Field Superfund Site is located in Morris County, New Jersey, approximately 3 miles northeast of Dover, New Jersey, and 24 miles northwest of Newark, New Jersey. The EM/WS Plume area of concern is located in the east-central portion of Rockaway Borough, west of the Rockaway River.

1.2 Site Background

The Rockaway Borough Well Field Site is located in the north central region of New Jersey and encompasses approximately 2.1 square miles (see figure 2). Rockaway Borough obtains their potable water supply from groundwater using three municipal supply wells (GW-1, GW-5, and GW-6), which are located in a glacial aquifer designated by the EPA. Eight other wells previously used for potable water supply by the Borough were abandoned because of their lack of productivity. In 1980, volatile organic compounds (VOCs) were detected in the municipal wells. The contaminated wells are close to the Rockaway River, which runs through the Borough. The site is located in a suburban residential setting and is surrounded by homes, businesses, and municipal property. The municipal well field serves approximately 10,000 residents of the Borough of Rockaway and its surrounding communities at a rate of approximately 1.2 million gallons per day.

In 1981, an emergency was declared due to the groundwater contamination, and the residents supplied by the distribution system were advised not to use their tap water for drinking and cooking. Temporary drinking water supplies were trucked in by the National Guard. In 1981, the Borough installed an activated carbon water treatment system to reduce contaminant concentrations. In 1993, an air stripping system was added in advance of the carbon treatment system to improve the system, reduce operating costs and ensure compliance with Safe Drinking Water Act standards.

In 1985, the New Jersey Department of Environmental Protection (NJDEP) initiated a Phase I Remedial Investigation/Feasibility Study (RI/FS) (SAIC 1986). The Phase I report concluded that contamination of the municipal water supply was emanating from multiple source areas within the Borough. The source areas identified included the following properties: Klockner & Klockner (K&K), located at Stickle Avenue and Elm Street; Ron Realty Industrial Area, located at 114 Beech Street; Stapling Machine Company, located at 41 Pine Street, and Pettit Paints, located at Pine Street and Stickle Ave.

Based on these findings, the United States Environmental Protection Agency (EPA) initiated a Phase II RI/FS (ICF 1991a and 1991b) to identify the contaminant sources, further delineate the full extent of contamination and evaluate remedial action alternatives to address the sources of contamination. Some of the major findings and conclusions of Phase II RI/FS were as follows:

- Groundwater in the northeast portion of Rockaway Borough was contaminated with VOCs, primarily Trichloroethene (TCE) and Tetrachloroethene (PCE)
- A PCE groundwater contamination plume originating in the EM/WS Street area was impacting municipal Wells No. 1 and 5 (GW-1 and GW-5). However, the source was not identified
- Groundwater contamination from TCE was emanating from the (K&K) property and impacting the Rockaway Borough Well Field, specifically municipal Well No. 6 (GW-6)
- Groundwater contamination from VOCs was emanating from the Ron Realty Industrial Area
- Groundwater beneath Pettit Paints was contaminated with VOC's, primarily xylene, toluene and ethyl benzene
- A groundwater divide was located east of Stickle Avenue in the northeast portion of Rockaway Borough.

These studies led to a 1986 Record of Decision (ROD) signed on September 29, 1986, for continued operation and maintenance of the Rockaway Borough water treatment system and further study to identify sources and delineate the full extent of contamination. The supplemental study involved identifying contaminant source areas, further delineation of the extent of groundwater contamination, and evaluation of additional alternatives for final groundwater cleanup. The study identified two separate plumes of groundwater contamination, the K & K plume and the Wall St. plume. A second ROD signed on September 30, 1991 selected a remedial action, which entailed extracting and treating contaminated groundwater emanating from the K&K and the EM/WS areas to restore the aquifer.

In 1994, EPA and Thiokol entered into a Consent Decree whereby Thiokol agreed to, among other things, conduct the Remedial Design (RD) for the Rockaway Borough Well Field Site. In the RD, Thiokol was required to address both the PCE plume emanating from the EM/WS area and the TCE plume emanating from the K&K site, but only to remediate the K&K plume via a groundwater remedy. Thiokol was not required to implement the RA for the PCE plume or for any sources of contamination throughout the Borough, emanating from the EM/WS area.

In 2001, Alliant Techsystems (ATK) replaced Thiokol as the Responsible Party for this project.

1.3 Scope of Work

This work is being conducted under the Resource Conservation and Recovery Act (RCRA) with regulatory coordination of the New Jersey Department of Environmental Protection (NJDEP) and the EPA Region II.

The project objectives involve: installation of remedial extraction wells, treatment of extracted groundwater, discharging of treated groundwater, construction of groundwater treatment system (GTS) building, testing and installation of treatment system, demolition of existing facility, performing appropriate environmental monitoring to ensure the effectiveness of the selected remedial action remedy, and conducting additional preparatory and post-design tasks as specified in the SOW and associated modifications.

The primary tasks for this project are indicated below.

- Mobilization and Site Preparation
- Extraction Well (EW)/ Monitoring Well (MW) Installation
- Aquifer Pump Testing
- MW and Boring Abandonment
- Pipe Trenching and Installation
- Surveying
- Building Demolition
- Groundwater Well Pump – 1 Temporary Bypass
- GTS Building and Pump House Construction
- GTS Equipment Installation
- GTS Electrical Installation
- GTS Supervisory Control and Data Acquisition System Installation
- GTS Water Supply Piping
- Groundwater Well Sampling
- Start-up and Performance Testing
- Excavation, Grading and Backfilling for Flood Storage Creation
- Concrete Reinforcement and Formwork
- Concrete mixing, placement, curing and finishing
- Transportation and Disposal of Waste/Spoils
- Site Restoration and Demobilization.

2.0 PROJECT ORGANIZATION

This section of the SSHP provides information on project personnel, key CAPE project personnel, and a description of CAPE personnel S&H responsibilities.

2.1 Key Project Personnel

Key project personnel are identified in the project Emergency Contact List (Attachment 2). Personnel that will be listed include those individuals serving in the following functions:

- COR (USACE)
- POC (EPA)
- PM (CAPE)
- Site Superintendent (CAPE)
- SSHO (CAPE)
- Asbestos Competent Person (CP) (Subcontractor)
- Lead CP (Subcontractor)

- SHM (CAPE).

2.2 CAPE Personnel Health and Safety Responsibilities

2.2.1 Project Manager

The PM is responsible for overall direction, coordination, technical consistency, and review of the project contract. PM S&H responsibilities are:

- Directing, coordinating, and implementing the project contract
- Reviewing and approving the site-specific SSHP
- Emphasizing safety and holding personnel accountable for safe work performance
- Enforcing implementation and compliance with the SSHP and S&H procedures
- Providing support to the Site Superintendent and SSHO
- Monitoring and evaluating S&H performance of project operations
- Communicating with the COR to evaluate and resolve S&H issues.

2.2.2 Site Superintendent

The Site Superintendent is charged with the overall responsibility for the successful completion of CAPE field operations. Site Superintendent S&H responsibilities are:

- Preparing and organizing project activities on site
- Reviewing and approving the site-specific SSHP
- Providing equipment and materials for project operations
- Emphasizing safety and holding personnel accountable for safe work performance
- Enforcing implementation and compliance with the SSHP and S&H procedures
- Ensuring correction of unsafe work conditions and/or unsafe work practices
- Monitoring and evaluating S&H performance of project operations
- Communicating with the COR to evaluate and resolve S&H issues.

2.2.3 Site Safety and Health Officer

The SSHO is the onsite project S&H supervisor that is present during fieldwork activities. As per EM 385-1-1 requirements, the SSHO must be present at the site any time work is performed. If the SSHO must be absent from the site, the S&H duties must be delegated to another qualified responsible party at the site (e.g., Site Superintendent). The SSHO must ensure that the person assuming this temporary role is first-aid/ cardiopulmonary resuscitation (CPR) certified and is fully aware of their role and responsibilities during the SSHOs absence. If a qualified replacement is not available, then work shall stop for a safety stand down until a qualified/certified person is available. SSHO S&H responsibilities include:

- Reviewing and approving the site-specific SSHP
- Maintaining copies of the SSHP on site during field activities
- Implementing provisions of the SSHP and the CAPE Corporate S&H Program
- Requiring that site personnel meet training and medical surveillance requirements
- Conducting site orientation training, SSHP review, and daily safety meetings

- Emphasizing safety and holding personnel accountable for safe work performance
- Reviewing site hazards and establishing safety control measures
- Maintaining a hazardous substance inventory list
- Maintaining copies of material safety data sheets (MSDSs)
- Maintaining safety equipment and supplies
- Performing inspections for safe work operations
- Enforcing implementation and compliance with the SSHP and S&H procedures
- Establishing site control work zones and boundaries
- Determining PPE requirements and monitoring proper use
- Directing decontamination procedures to be used
- Performing and/or coordinating site exposure monitoring
- Reporting safety violations or S&H concerns promptly to the PM
- Ensuring correction of unsafe work conditions and/or unsafe work practices
- Monitoring and evaluating S&H performance of project operations
- Maintaining S&H records
- Reporting and investigating accidents and incidents
- Communicating with the COR to evaluate and resolve S&H issues.

2.2.4 Asbestos Competent Person

An OSHA Asbestos CP must be designated for construction work involving asbestos removal and handling. The Asbestos CP is responsible for the overall direction, coordination, supervision, and successful completion of all asbestos abatement project field operations.

The Asbestos CP has authority and responsibility to perform or supervise the following asbestos work-related activities (as applicable):

- Setting up the regulated area and posting warning signs and other required postings
- Ensuring, by onsite inspection, the integrity of the regulated area
- Establishing procedures to control entry to and exit from the regulated area
- Supervising worker exposure monitoring and ensuring that it is conducted, as required
- Ensuring that workers in the regulated area wear PPE, as required
- Providing supervision for use of engineering controls, safe work practices, and PPE
- Ensuring that workers use hygiene facilities and observe decontamination procedures
- Ensuring that required notifications for asbestos-related work are completed.

2.2.5 Lead Competent Person

An OSHA Lead CP must be designated for lead-related construction work. The Lead CP is the primary supervisor that directs, coordinates, supervises, and monitors lead-related

work. The Lead CP is the individual who will identify lead hazards during lead-related work and who has sufficient experience and authority to take prompt corrective measures to eliminate them. The Lead CP will be onsite during lead-related work to supervise project operations. The Lead CP implements the Lead Hazard Compliance Plan (LHCP) and has the authority to stop lead abatement work at any time during the project.

The Lead CP has authority and responsibility to perform and supervise the following lead-related activities (as applicable):

- Ensuring that workers have received training in applicable OSHA lead requirements
- Reviewing and approving the LHCP for conformance with applicable standards
- Inspecting lead-related work for compliance with the LHCP requirements
- Establishing regulated area, decontamination system, and waste handling system
- Setting up the lead regulated area and posting warning signs and other required postings
- Inspecting the integrity of the lead regulated area enclosure or containment
- Establishing procedures to control entry to and exit from the lead regulated area
- Supervising worker exposure monitoring and ensuring that it is conducted, as required
- Ensuring that workers in the regulated area use protective clothing and respirators
- Providing supervision for use of engineering controls, safe work practices, and PPE
- Ensuring that engineering control and cleanup equipment are operating properly
- Ensuring workers use hygiene facilities and observe decontamination procedures
- Ensuring that required notifications for lead-related work are completed.

2.2.6 Safety and Health Manager

The SHM is a Certified Industrial Hygienist (CIH) or Certified Safety Professional (CSP). SHM S&H responsibilities are:

- Developing the site-specific SSHP
- Conducting S&H inspections and audits as scheduled with the PM
- Providing S&H technical assistance to the PM, Site Superintendent, and SSHO.

2.2.7 Subcontractors

Subcontractors will be used to provide selected services associated with the performance of project work. Subcontractor information is provided in Attachment 3. Subcontractors who come on site to perform fieldwork and/or enter controlled areas of the site are subject to SSHP requirements. Subcontractor S&H responsibilities are:

- Providing copies of required S&H training and certification documents to the SSHO, as applicable (i.e., training certifications, medical clearance [fitness for duty] certification, first-aid/CPR training, respirator fit testing)
- Providing, before site work, a hazardous substances inventory list and copies of applicable MSDSs to the SSHO for hazardous substances to be brought on site by the subcontractor
- Enforcing applicable SSHP requirements with subcontractor employees
- Reviewing, understanding, and complying with the SSHP and safety instructions from the SSHO, or other competent authority
- Observing the buddy system during work activities
- Promptly reporting unsafe work conditions, unsafe work practices, and violations of the SSHP to the subcontractor supervisor and the SSHO
- Immediately reporting all injuries or illnesses to the subcontractor supervisor and the SSHO.

2.2.8 Site Personnel

Site personnel S&H responsibilities are listed below.

- Understanding and complying with the SSHP
- Following the instructions of the SSHO or other competent authority
- Promptly reporting any unsafe work conditions or unsafe work practices
- Immediately reporting injuries or illnesses to their direct supervisor and the SSHO.

3.0 SITE HAZARDS

Site hazards and hazard control measures for chemical, physical, and biological hazards that are likely to be encountered during project work are reviewed in this section of the SSHP.

3.1 Chemical Hazards

The contaminants of concern (COCs) to be encountered during project fieldwork include asbestos-containing material (ACM); lead-based paint (LBP) and/or lead-containing paint (LCP) and VOCs (e.g., TCE).

Table 1 provides chemical hazard information for anticipated site contaminants. The table includes a summary of the health effects, potential routes of entry, and the OSHA permissible exposure limits (PELs) or American Conference of Governmental Industrial Hygienists (ACGIH) threshold limit values (TLVs) for these hazardous substances (lowest value).

3.1.1 Trichloroethene

Trichloroethene, trichloroethylene, or TCE is a colorless, non-flammable, non-corrosive liquid with a characteristically "sweet" odor common to most hydrocarbons. It is primarily used as an industrial solvent in degreasing, dry cleaning and extraction processes. Decomposition of TCE, due to contact with hot metal or ultraviolet radiation, forms products including chlorine gas, hydrogen chloride, and phosgene. Exposure to TCE can depress the central nervous system resulting in depression, mental confusion, lack of coordination, and insomnia. Nausea and vomiting, irregular heartbeat, fatigue, blurred vision and intoxication similar to alcohol ingestion can also occur.

3.1.2 Hazardous Substances with Anticipated Use at the Site

A listing of hazardous substances with anticipated use during site fieldwork is provided below. A Hazardous Substances Inventory List will be prepared by the SSHO. The SSHO will maintain MSDSs for hazardous substances to be used during site work including:

Fuels: propane fuel for vehicles and equipment

Lubricants: Oil, grease, and other lubricants for equipment

Fire Extinguishing Agent: Dry chemical for fire extinguishers

Paint: Spray paint for marking of locations

Decontamination Materials: Detergent and nitric acid solution.

3.2 Physical Hazards

The primary physical hazards that may be encountered during site work are indicated below. The following information describes physical hazard safety control measures to be used.

Fire Protection (see Section 3.2.1): Fuel will be used for vehicles, heavy equipment, and machinery operation. Fire extinguishers will be available on site. Hot work (work that uses a flame or creates sparks) is not expected. Hot work permit procedures will be implemented should hot work be needed.

Overhead Utilities (see Section 3.2.2): Overhead utility lines will be present. The presence of overhead utilities will be surveyed before bringing equipment with high extensions (e.g., heavy equipment, dump truck, roll-off bin truck, aerial lift, elevating work platform, and/or crane) into a work area.

Underground Utilities (see Section 3.2.3): Underground utility lines may be present. Obtain a dig permit, as applicable, before any ground disturbance. Marked locations of existing utilities will be approximate. Review and inspect utility mark-outs before excavating. If utilities are indicated in an area to be excavated, hand dig (or pot hole by air knife or water injection) 2 feet on either side of the marked utility to locate it.

Immediately contact the COR should damage to underground utilities or subsurface construction occur.

Heavy Equipment Operation (see Section 3.2.4): Heavy equipment will be used for trenching, contaminated soil removal, and other earthwork activities. Ground personnel will, at times, be working in the general vicinity of equipment operation. Heavy equipment will be inspected daily and documented. Ground personnel will position themselves out of the swing radius of operating heavy equipment whenever possible. Personnel will not be allowed to walk underneath loaded buckets. Ground personnel will wear high-visibility safety vests and be required to maintain visual contact with equipment operators. Hand signals will be established.

Excavation and Trench Safety (see Section 3.2.5): Excavation operations may involve personnel entry into trenches or excavations. Information is provided to ensure communication of hazards related to excavation and trench safety. Excavation activities involving personnel entry into trenches 4 feet or more in depth or excavations 5 feet or more in depth require strict implementation of excavation safety procedures. Such operations will require protective systems for excavation operations (sloping, benching, shielding, and/or shoring) and compliance with the OSHA "Excavation" standard. For these operations, a CP will supervise operations, conduct daily inspections, and implement protective systems for excavation operations. Access to site excavation areas will be controlled and limited to authorized personnel only.

Vehicle and Equipment Traffic Control (see Section 3.2.6): Concurrent operation of heavy equipment and vehicles, and the presence of ground personnel, will occur during site work. Traffic patterns will be established at the site for truck traffic and reviewed during safety meetings. Personnel will wear high-visibility safety vests with reflective striping when working near traffic areas. Spotters will be used, if needed, for the backing of vehicles into tight work areas.

Material Handling (see Section 3.2.7): Material handling involving lifting and carrying of materials will occur. Personnel will review proper lifting techniques during safety meetings.

Tools, Machinery, and Equipment Use (see Section 3.2.8): Hand and power tools will be used. Tools will be used according to design. Power tools requiring electrical cords will use ground fault circuit interrupters (GFCIs).

Electrical Equipment (see Section 3.2.9): Fuel-powered generators may be used to provide electrical power on site. Use GFCIs for portable electrical equipment. Inspect electrical extension cords for damage and ground plugs. Keep electrical equipment/cords away from water and fuel materials. Electrical cords may not be used for raising or lowering the equipment. Electrical cords may not be fastened with staples or otherwise hung in such a fashion that could damage the outer jacket or insulation. Trained and licensed electricians will be used where required.

Lockout/Tagout (see Section 3.2.10): Lockout/Tagout (LOTO) of electrical equipment will be conducted, as needed. Trained and licensed electricians will be used, where

required. Energy sources for equipment must be turned off or disconnected and switches locked out/tagged out before servicing. Standardized locks and tags are to be used to indicate the identity of the individual using them. Each LOTO device is required to be removed by the individual who applied the device. The SSHO is responsible for ensuring the proper implementation of LOTO, including approval of permits and maintenance of personal locks and a log of lock assignments.

Noise Exposure (see Section 3.2.11): Noise exposure above 85 decibels on the A-weighted scale (dBA) is expected when working near or operating machinery and equipment (e.g., heavy equipment, generators, compressors, and motors). Earplugs will be used for worker protection.

Elevated Work Locations and Fall Protection (see Section 3.2.12): Work from elevated locations with a fall hazard of 6 feet or more will occur during fieldwork. Fall protection equipment will be used if work is conducted at unprotected elevated locations with a fall hazard of 6 feet or more.

Heat Stress (see Section 3.2.13): Heat stress conditions may occur from elevated ambient temperatures, heavy workloads, and impermeable protective clothing use. Provisions will be made to establish break areas, provide fluids, and adjust work-rest schedules, as needed.

Cold Stress (see Section 3.2.14): Ambient temperatures below 45ºF may occur at times during site work. Workers may be required to work outside in cold temperatures.

Ladder Safety (see Section 3.2.15): Ladders may be used to access work locations (i.e., elevated work areas, high ceilings). Ladder safety procedures will be followed during ladder use.

Hoisting and Rigging (see Section 3.2.16): Hoisting and rigging may be needed for the moving of materials. Slings and cables will be inspected for damage or deterioration. Rigging of materials will be checked before hoisting; tag lines used during hoisting, as needed. Personnel will not be allowed to walk under overhead loads.

Inclement Weather and Adverse Environmental Conditions (see Section 3.2.17): Heavy rain or snow, lightning, and strong winds could occur during outside work operations and provisions will be made to shut down outdoor operations should this occur.

Miscellaneous Physical Hazards (see Section 3.2.18): General safety hazards will be present during all project tasks. Poor housekeeping, uneven or slippery walking surfaces, and other slip, trip, and fall hazards, poor illumination, and overhead obstructions are primary hazards. General safety information will be communicated during safety meetings to review these hazards and safety precautions.

3.2.1 Fire Protection

Procedures and precautions for fire hazards and fire protection include:

- Smoking is not allowed in areas where flammable or combustible materials are present
- Fires and open flame devices must not be left unattended
- Portable multipurpose fire extinguishers must be maintained on site at all times, kept fully charged, inspected monthly, and serviced annually. Fire extinguishers are to be placed within 75 feet of active work areas where flammable or combustible materials are present
- OSHA-approved metal safety cans, painted red with a yellow stripe, that have self-closing lids and flame arrestors must be used to store small quantities of flammable liquids
- Static electricity-generating equipment requires bonding and grounding whenever transferring flammable or combustible liquids or when working in areas where these materials are present
- Use of equipment that uses open flames or creates sparks requires implementation of hot work procedures. Hot work is not allowed without approval by the SSHO and completion of a Hot Work Permit. A combustible gas indicator is used to determine if combustible vapors or gases exceed 10 percent of the LEL before hot work in areas where flammable or combustible materials may be present. Hot work must be conducted under a fire watch with a dry chemical fire extinguisher, or equivalent. Hot work personnel should wear protective clothing (i.e., leather chaps, jacket) for protection from metal slag and sparks and eye protection with filtered lenses.

3.2.2 Overhead Utilities

Overhead utility safety precautions include:

- The work area must be surveyed for overhead utilities and safety measures established before bringing equipment with high extensions on site (e.g., heavy equipment, dump trucks, roll-off bin truck, aerial lift, elevating work platform, and/or crane)
- Equipment that has high overhead projections is not allowed to operate within a 10-foot radius (minimum distance) of overhead power lines. Overhead high-voltage power lines more than 50,000 volts require additional distance. Verify the voltage of the overhead lines and check against EM 385-1-1 Section 11, Table 11-1 to ensure that the required minimum distance from overhead lines is maintained. EM 385-1-1(11)(E) requires the following minimum clearance from energized overhead electrical lines for the indicated voltages: 0-50 kilovolts (kV) (9.8 feet); 51-200 kV (14.7 feet); 201-300 kV (19.7 feet); 301-500 kV (24.6 feet); 501-750 kV (34.4 feet); and 751-1,000 kV (44.3 feet)
- When crossing underneath high-voltage power lines: use a spotter to help the equipment operator monitor the distance from overhead lines; post caution overhead line signs near the approach to the overhead lines; and set up and

demarcate a designated crossing area for the equipment to cross underneath the power lines

- In the event of contact with a utility line: Remove personnel from the area and control access to the affected area. Contact the utility company for immediate service.

3.2.3 Underground Utilities

Underground utility safety precautions include:

- The work area must be surveyed to identify underground utilities before subsurface work activity (e.g., drilling, excavation)
- Prior to subsurface work, the Site Superintendent or SSHO will interface with the installation regarding the location of underground utilities. The local utility locating organization will be contacted and a dig permit will be issued before subsurface activity. Utility clearance procedures will mark out known existing underground utilities in the work area. The Site Superintendent and SSHO shall review utility mark-outs and determine the location of underground utilities before excavation. Excavation by power-driven equipment should <u>not</u> be conducted within 2 feet of either side of the marked utility. To locate the indicated obstruction,, hand-excavation (or air knife or water injection), on each side of the mark-out,, should be conducted and continued until the obstruction is uncovered or clearance for the new grade is ensured
- In the event of contact with a utility line: Remove personnel from the area and control access to the affected area. Contact the utility company for immediate service.

3.2.4 Heavy Equipment Operation

Heavy equipment operation safety procedures and precautions include:

- Only experienced personnel will operate excavation equipment on site
- Heavy equipment will have rollover protection, seat belts, good functioning brakes, a fire extinguisher, and operating backup alarms and horns
- Heavy equipment will be inspected daily at the beginning of each work shift and recorded by the equipment operator on a Heavy Equipment Inspection Report form (see Attachment 1) so that the following systems and parts are in good working order: service, emergency and parking brakes, tires/tracks, horn, steering mechanism, coupling devices, seat belts, operating controls, safety devices, fire extinguisher, and backup alarms
- Excavation work areas will be properly marked and guarded with barriers and/or caution tape to prevent unauthorized personnel entry and to prevent personnel from falling into open holes
- Workers will be required to wear high-visibility safety vests with reflective striping when working around heavy equipment

- Workers will be cautioned to look carefully where they walk to avoid moving equipment. Concurrent operations will be curtailed to prevent workers from being placed in dangerous proximity to moving heavy equipment
- Before entering the swing radius of operated heavy equipment, ground personnel must gain unobstructed eye contact with the equipment operator. Unobstructed eye contact with the equipment operator must be maintained at all times while working within the swing radius of the equipment. As a courtesy, ground personnel should "signal" the equipment operator when they are exiting the swing radius of the heavy equipment
- Personnel are not permitted to ride as passengers on heavy equipment
- Whenever equipment is parked, the parking brake will be set, and wheels will be chocked when on inclines. Bulldozer blades, hoe buckets, truck beds and the like will be fully lowered or blocked when not in use. Parts of machinery held aloft, such as hoe buckets or truck beds, will be blocked or cribbed before employees are allowed to work under or between them
- Dust control measures (i.e., water application) will be used, as needed, to minimize airborne dust during heavy equipment operation.

3.2.5 Excavation and Trench Safety

Excavation and trenching activities must comply with OSHA excavation requirements. Compliance with these requirements must be maintained when installing trenches 4 feet or more in depth and/or excavations 5 feet or more in depth into which personnel are required to descend. Excavation and trenching safety procedures and precautions include the following:

- Conducting and/or reviewing utility clearance information and determine the location of overhead and underground utilities before excavation
- Contacting the local utility locating organization within 48 hours prior to excavation operations, obtaining a permit (as required), and re-notifying them if an extended excavation period is required
- Delineating the areas to be excavated with white paint or other suitable markings. Before excavating, checking for the local utility location markings with the following color code: Red (electric power); Yellow (gas distribution); Orange (telephone and communications); Blue (water installation); and Green (sewer)
- Finding the exact location of substructures by hand excavation methods if sensitive underground substructures are present. It is recommended that a 24-inch excavation zone on exterior walls of subsurface installations be maintained, as required by the SSHO or CP
- Ensuring that no construction equipment or personnel come closer than 10 feet from an energized overhead high-voltage line. Overhead high-voltage power lines greater than 50,000 volts require additional distance

- Properly marking and guarding excavations to prevent personnel from falling into an open hole. Fencing, barricading, taping off, or otherwise securing open trenches during non-work periods
- Surface encumbrances near the excavation (e.g., trees, boulders, poles) must be removed
- A designated OSHA CP must provide onsite supervision during excavation activities and must be present at all times when personnel are in the excavation. The CP must examine the excavation before work in the excavation, must make daily inspections of excavations, adjacent areas, and protective systems where employee exposures exist, and must inspect the excavation after a rainstorm or other hazard-increasing occurrence. Daily inspections are to be recorded by the CP on the "Excavation Safety Checklist" and "Excavation Safety Soil Analysis Checklists"
- Use of protective systems such as shoring, sloping, benching, or shielding, is required for personnel entry into trenches 4 feet or more in depth and/or excavations 5 feet or more in depth
- Access to an excavation is required within 25 feet of lateral travel for trenches 4 feet or more in depth into which persons will descend. Stairways, ladders, or ramps must be provided for excavation access
- Persons exposed to equipment and vehicle traffic are required to wear high-visibility safety vests with reflective striping
- Mobile equipment warning systems are required when equipment operators do <u>not</u> have a clear and direct view of the edge of the excavation
- Soil must be placed no closer than 2 feet from the edge of trenches and excavations
- Trenches shall be crossed only if safe crossing is provided and for excavations greater than 7.5 feet deep, standard guardrails and toe boards are required on walkways or bridges
- Persons are <u>not</u> permitted underneath loads handled by digging equipment and employee protection from falling into the vicinity of operating excavation equipment is required
- Water accumulation in or adjacent to excavations must be prevented by diversion ditches or dikes
- Excavation work is <u>not</u> allowed to be conducted at the base of foundations, retaining walls or other structures until inspected by a CP and found that no hazard of undermining exists
- Existing walls or other structures are <u>not</u> to be used as retaining walls to hold part of an excavation or backfill unless it will safely withstand all expected loads
- Braces or other supports are required for excavations adjacent to streets, railroads or other sources of vibration or superimposed loads

- Atmospheric testing is required in excavations where oxygen-deficient or hazardous atmospheres exist or could reasonably be expected to exist. If hazardous atmospheres are present, ventilation, respiratory protection, and atmospheric testing must be used and emergency equipment (e.g., self-contained breathing apparatus, safety harness and line, basket stretcher) must be readily available
- Each soil and rock deposit must be classified by a CP as either stable rock, Type A soil, Type B soil, or Type C soil. Soil classification is made based on the results of at least one visual test and one manual test to identify the properties, factors, and conditions affecting the classification of the soil
- Layered systems are classified per their weakest layer or by each layer individually where a more stable layer lies under a less stable layer
- Changes in the properties, factors, or conditions of a deposit must be evaluated by a CP and reclassified, as necessary
- Type A soil is cohesive soil with an unconfined compressive strength of 1.5 tons per square foot (tsf) or greater (≥1.5 tsf) and includes clay, silty clay, sandy clay, clay loam, caliche, and hardpan. Soil is <u>not</u> classified Type A if: the soil is fissured; the soil is subject to vibration from heavy traffic, pile driving, or similar effects; the soil has been previously disturbed; the soil is part of a sloped, layered system where the layers dip into the excavation on a slope of four horizontal to one vertical (4H:1V) or greater; and the material is subject to other factors that would require classification as a less stable material
- Type B soil is cohesive soil with an unconfined compressive strength greater than 0.5 tsf but less than 1.5 tsf. Type B soil includes: granular cohesion less soils such as angular gravel, silt, silty loam, sandy loam, and silty clay loam; previously disturbed soils except those that would otherwise be classified as Type C soil; soil that meets Type A unconfined compressive strength or cementation requirements but is fissured or subject to vibration; dry rock that is <u>not</u> stable; and material part of a sloped, layered system where layers dip into the excavation on a slope less steep than 4H:1V, but only if the material would otherwise be classified as Type B
- Type C soil is cohesive soil with an unconfined compressive strength of 0.5 tsf or less (≤ 0.5 tsf). Type C soil includes: granular soils including gravel, sand, and loamy sand; submerged soils or soil from which water is freely seeping; submerged rock that is <u>not</u> stable; and material in a sloped, layered system where the layers dip into the excavation or a slope of 4H:1V or steeper
- A CP shall complete a visual soil classification test by observing the excavated soil, estimating the particle size range and relative amounts, and checking the excavation and the area adjacent to the excavation for: soil cohesion; tension cracks that could indicate fissured material; chunks of soil that spall off a vertical side that could indicate fissures; existing utility and other underground structures; previously disturbed soil; layered systems that slope toward the excavation; evidence of surface water or water seeping from sides of the excavation; and sources of vibration

- A CP shall complete at least one of the following manual soil classification tests to determine qualitative and quantitative information for soil and rock deposit classification: plasticity test, dry strength test, thumb penetration test, pocket penetrometer test, hand-operated shear vane test, and drying test
- Visual and manual soil classification tests will be recorded on the "Excavation Safety Soil Analysis Checklist" form
- A Registered Professional Engineer (PE) is required to design sloping, benching, or other protective systems for excavations greater than 20 feet deep
- Maximum allowable sloping (horizontal to vertical) when used as an excavation protection system is classified according to the soil or rock type below:

  Stable rock: Maximum allowable slope of vertical (90º)
  Type A soil: Maximum allowable slope of ¾ : -1 (53º)
  Type B soil: Maximum allowable slope of 1 : 1 (45º)
  Type C soil: Maximum allowable slope of 1-1/2 : 1 (34º).

3.2.6 Vehicle and Equipment Traffic Control

Vehicle and equipment traffic control procedures and precautions are required due to the presence of concurrent vehicle, equipment, and/or pedestrian traffic and include the following:

- Personnel are required to wear high-visibility safety vests with reflective striping where exposure to vehicle or equipment traffic exists
- Workers will be cautioned to look carefully where they walk to avoid vehicles and moving equipment and to maintain eye contact with equipment operators
- Use of traffic signs, barricades, flashers, delineators, traffic cones, caution tape, and/or flagmen (as needed) around work areas with vehicle or equipment traffic
- The PM, Site Superintendent, and/or SSHO will establish vehicle and equipment traffic patterns to be used. Traffic haul routes will be identified during daily safety meetings and will take into account times and locations of concern for vehicle, equipment, and pedestrian traffic exposures in the work area
- Drivers will obey all traffic laws and rules of the road with emphasis on following distance and speed appropriate to conditions. Drivers will see that areas are clear before backing vehicles and will use a spotter, if needed. Drivers will watch for overhead utility line clearance. Drivers will keep vehicle windshields and mirrors clean. Drivers must keep vehicle steps clean and watch their step when exiting vehicles to avoid ankle sprains.

3.2.7 Material Handling

Procedures for material handling, storage, and disposal include:

- Material handling devices should be used for handling heavy or bulky items whenever possible over manual material handling. Whenever handling heavy or

bulky items, the material handling needs should be evaluated in terms of weight, size, distance, and path of movement. The following hierarchy for selection of material handling means should be used: elimination of material handling needs by engineering; movement of material by mechanical device (i.e., lift truck, overhead crane, conveyor); movement by manual means with handling aid (i.e., dolly, cart); and movement using safe lifting techniques

- Personnel must be trained in safe lifting procedures including: sizing up the load first; getting help if the load is bulky, heavy, or of unwieldy length; stabilization of footing; lift with the legs while keeping theback straight; maintaining balance; not twisting under strain or jerking the load; and keeping the load close to the body
- When two or more persons are carrying long material together, all persons must carry the material on the same shoulder and lift or lower the material in unison.

3.2.8 Tools, Machinery, and Equipment Use

Tools, machinery and equipment use safety procedures include:

- Equipment and tool inspection and maintenance are required to promote safe conditions for the intended use. Tools and equipment must be inspected daily or before each use for defects. Tools that are burred, mushroomed, have split or loose handles, worn or sprung jaws, or are generally unsafe must be turned in to the SSHO
- Defective or unsafe equipment must be tagged as defective until repaired or otherwise made acceptable. Defective or unsafe equipment must be removed to a secure place to prevent inadvertent use until repaired. Repaired items must be re-inspected by the SSHO before being placed back into service
- Equipment must be used only for the purpose for which it was designed. Use tools properly (do not use a wrench for a hammer, screwdriver for a chisel, pliers for a wrench, pipe wrenches as a substitute for other wrenches, a pipe handle-extension or a “cheater” on a wrench). All modifications, extensions, replacement parts, or repairs of equipment must maintain at least the same factor of safety as the original equipment
- Equipment (i.e., heavy equipment) containing liquid systems (i.e., fuel, hydraulic, lubrication) are to be inspected daily so that liquid-containing systems (e.g., hoses, tubing, hydraulic lines) are in good operating condition and that plugs, stoppers, valves, etc., are properly seated
- Tools, equipment, or material must not be thrown up or down from one working level to another. A hand line should be used to lift or lower tools
- Nails or spikes must not be left protruding from planks, boards, or other timbers. Nails or spikes should be pulled out or clinched (bend them over) into the wood
- Machinery or equipment must not be operated without proper training and special permission unless it is a regularly assigned duty

- Loose or frayed clothing, dangling ties, rings, etc., must not be worn around moving machinery or other mechanical sources of entanglement
- Work must not be performed under vehicles supported by jacks or chain hoists, without protective blocking that will prevent injury if jacks or hoists fail
- Air hoses must not be disconnected from compressors until the air within the hoses has been bled off
- Electrical power tools, lighting equipment, etc., to be used must be properly grounded by using three-wire receptacles and extension cords rated for the amperage required. GFCIs should be used with temporary electrical systems or other proper grounding system. An assured equipment grounding conductor program should be implemented if GFCIs are not exclusively used
- Portable electric tools must not be lifted or lowered by means of a power cord. Electrical equipment cords should be kept coiled when not in use. When electrical equipment is in use, cords should be protected and positioned to avoid being run over by vehicles or equipment
- Machinery must not be repaired or adjusted while in operation. Oiling of moving parts must not be attempted except on equipment that is designed or fitted with safeguards to protect the person performing the work.

3.2.9 Electrical Equipment

Electrical equipment procedures include:

- Trained and licensed electricians will be used for electrical installation services
- Personnel must use GFCIs in conjunction with portable electric tools or other equipment connected to electrical extension cords. An assured equipment grounding conductor program must be implemented if GFCIs are not exclusively used
- Portable electric tools must not be lifted or lowered by their power cord
- Electrical extension cords must be rated for the amperage required. The plugs must not be altered or used incorrectly (such as the addition of non-grounded plug adapters)
- Electrical equipment cords should be kept coiled when not in use. When electrical equipment is in use, cords should be protected and positioned to avoid being run over by vehicles or equipment
- Inspect electrical extension cords for damage and ground plugs
- Keep electrical equipment/cords away from water and fuel materials
- Electrical cords may not be used for raising or lowering the equipment. Electrical cords may not be fastened with staples or otherwise hung in such a fashion that could damage the outer jacket or insulation.

3.2.10 Lockout/Tagout

Equipment use requires positive control of hazardous energy during servicing and maintenance of equipment where unexpected energization, startup of equipment, or release of stored energy could occur. LOTO procedures include:

- LOTO of electrical equipment for maintenance and servicing will be conducted by an electrical subcontractor as needed. Trained and licensed electricians will be used where required
- Energy sources for equipment must be turned off or disconnected and switches locked out and tagged out before servicing of equipment
- Standardized locks and tags are to be used to indicate the identity of the individual using them
- Each LOTO device is required to be removed by the individual who applied the device
- The SSHO is responsible for ensuring proper implementation of LOTO including approval of permits and maintenance of personal locks and a log of lock assignments.

3.2.11 Noise Exposure

The operation of equipment and machinery at the site may generate excessive noise levels and requires:

- Site personnel working in the immediate area of operating equipment to use hearing protection (e.g., foam ear plugs) whenever noise exposures exceed 85 dBA
- Noise exposures in excess of 85 dBA are assumed to be present whenever voices must be raised to be heard in normal conversation at 3 feet apart and also whenever working in the immediate areas of operating generators, compressors, and similar equipment.

3.2.12 Elevated Work Locations and Fall Protection

Elevated work locations and fall protection requirements include:

- Use fall protection when there is exposure to fall hazards of 6 feet or greater through use of guardrail systems, safety nets or personal fall arrest systems. Use personal fall arrest systems (full-body harness and shock-absorbing lanyard - no body belts) with locking snap hooks for personal fall arrest and positioning systems rigged to minimize free-fall distance to a maximum of 6 feet and such that the individual will <u>not</u> contact any lower level
- Develop written site-specific fall protection plans where significant fall hazards are present

- See that training provided to workers who may be exposed to fall hazards includes discussion of: The nature of fall hazards in the area; procedures for erecting, maintaining, disassembling, and inspecting fall protection systems to be used; use and operation of fall protection systems (i.e., guardrails, personal fall arrest, safety nets, warning lines, safety monitoring, controlled access zones, and others to be used); employee roles in the safety monitoring system when used; limitations on use of mechanical equipment; procedures for handling and storage of equipment/materials and erection of overhead protection; role of employees in fall protection plans; and review of the applicable requirements of the OSHA fall protection requirements.

3.2.13 Heat Stress

Heat stress precautions and prevention measures include:

- Personnel must be made aware that heat stress can occur during periods of elevated ambient temperatures, moderate to heavy workloads, and when impermeable protective clothing is in use
- Personnel will be informed about the various forms of heat stress (e.g., heat cramps, heat exhaustion, heat stroke) and the symptoms of exposure which are: Heat Cramps and Heat Exhaustion: Heat cramp and heat exhaustion initial symptoms are cramps, faintness, dizziness or disorientation, and pale, clammy skin. Heat Stroke: Heat stroke is an extremely serious medical emergency with sudden onset and symptoms that include dilated pupils, dry and hot skin, loss of consciousness, and convulsions
- Initial phases of work activity must be closely monitored by the SSHO because workers may not be acclimatized to hot conditions. The SSHO will try to identify personnel who are more susceptible to heat exposure
- Workers are responsible for observing each other and themselves for development of heat stress symptoms. Personnel will be encouraged to drink generous amounts of water and electrolyte replacement fluids (even if not thirsty) to prevent dehydration. Adequate shelter will be provided to protect personnel from direct sun exposure. Sufficient breaks will be provided so that personnel can remove protective clothing and cool down. Work/Rest regimens will be adjusted as required to avoid heat stress.

3.2.14 Cold Stress

Cold stress can occur upon exposure to cold environments where there is heat loss to the body, feet, hands, and/or head. Considerations include:

- Personnel will be informed about the various forms of cold stress (e.g., hypothermia, frostbite) and the symptoms of exposure. Cold Stress: Cold stress can occur upon exposure to cold environments where there is heat loss to the body, feet, hands, and/or head. Primary cold stress injuries are hypothermia and frostbite. Cold can also adversely affect mental capabilities resulting in accidents or injuries. The body's initial response to cold is shivering, vasoconstriction,

increased oxygen consumption, accelerated respiration and pulse, and increased heart output and blood pressure. Hypothermia: Hypothermia occurs when the body core temperature falls below 96.8ºF. Symptoms include intense uncontrollable shivering, sluggish thinking, difficulty speaking, muscular rigidity, blue puffy skin, poor coordination, cessation of shivering, dulled thinking, irrational stupor, unconsciousness, erratic heartbeat, slowed respiration, cardiac and/or respiratory failure, lung edema, and death. Treatment for hypothermia is to re-warm the body trunk, immerse in warm water (105ºF) or use heat packs. Frostbite: Frostbite occurs due to freezing of fluid that surrounds tissues. It occurs at less than 30ºF, and more rapidly with wind exposure. Frostbite affects the ears, chin, nose, fingers, and toes. Frostbite first appears as blanched skin or waxy or white skin that is firm to the touch with resilient tissue beneath. With deep frostbite, tissues are cold, pale, solid, and may turn black. Treatment for frostbite is to re-warm with warm water (105ºF) (do not rub with snow), and prevent refreezing of affected body parts

- Cold stress prevention measures include: Recognize cold stress conditions and exposure symptoms. Use personal protection by dressing for warmth, wind, and wet conditions. Wear layered clothing (i.e., wear thinner, lighter clothing next to the body with heavier clothing layered outside the inner clothing. Stay active as activity generates heat. Provide a warm break area when working in cold environments. Have first-aid equipment available. At temperatures lower than 25ºF, do not permit continuous cold exposure to exposed skin. At temperatures lower than 45ºF, wear warm clothing to include as needed: Boots; heavy socks (e.g., wool or polypropylene); mittens, insulated gloves; insulated head covers; thermal underwear; and insulated coveralls. Workers that get immersed in water or whose clothing becomes wet will be immediately provided with a change of clothing and be treated for hypothermia if symptoms become evident.

3.2.15 Ladder Safety

Ladder safety requirements include:

- Ladders must be of sound construction and are to be inspected before use. Metal ladders are not allowed near electrical equipment. Wooden ladders are not to be used if painted over in such a way that cracks or defects can be hidden
- Extension ladders must be placed so a minimum 4:1 angle ratio (4 feet up and 1 foot out) is used. Extension ladders must have anti-slip footings and be secured by substantial rope or other means. Extension ladders must extend a minimum 3 feet above the landing to be used
- The top two rungs of a ladder are not to be used to stand on
- Personnel are not allowed to stand below occupied ladders where tools and objects could fall.

3.2.16 Hoisting and Rigging

Hoisting and rigging safety procedures include:

- Hoisting and rigging activities are to be conducted according to applicable OSHA regulations and American National Standards Institute (ANSI) specifications
- Operators of powered, self-propelled equipment used for hoisting are required to have a Medical Examiner's Certificate stating that the operator meets physical qualification requirements
- The hoisting and rigging equipment operator must provide to the SSHO copies of the following records: equipment manufacturer operating, maintenance, and inspection instructions; equipment load tests in accordance with applicable OSHA and ANSI standards; written approval from the equipment manufacturer to modify hoisting equipment or attachments which alter the capacity of the equipment and the corresponding operating instructions and altered capacities; equipment inspection reports; and qualifications of crane operators and other hoisting equipment operators
- Only qualified personnel are allowed to perform hoisting and rigging operations. Hoisting and rigging personnel must know the capacities and operating characteristics of equipment to be used
- The operator is responsible for ensuring that daily (pre-use or pre-operation), monthly, and annual inspections are current before using any hoisting and rigging equipment. The operator must know the total weight of all loads, including rigging and other components, which contribute to the overall weight being lifted, before attempting the lift of any load. The operator must know the manufacturer's specified load rating for the equipment in the particular configuration to be used to lift or move a load. Equipment is not to be loaded beyond the manufacturer's specified load rating. Load charts, rated capacities, recommended operating parameters, and special hazard warnings are to be posted in a location accessible by the operator while working at the controls of the equipment. The operator must not bypass, override, or disable any equipment safety feature
- Auxiliary attachments to be used with hoisting and rigging equipment that affects the capacity, safe operation, or operating characteristics for the equipment must be used only per recommended instructions from the original equipment manufacturer
- The operator must respond to standard hand signals and/or continuous voice communication from a qualified signal person. If visual or voice contact is interrupted, the hoisting and rigging operation must immediately cease. The operator must obey a stop signal given at any time by anyone. The operator must never leave the control station of the equipment being operated while a load is suspended, unless required to do so by an approved emergency procedure
- Hoisting equipment (cranes, winch trucks, etc.) must not be moved unless suspended loads are secured to prevent swinging
- Persons are not allowed to ride on the ball or hook of any crane or derrick, nor on equipment, rigging, or on any loads being moved by heavy equipment
- All personnel have the authority to stop any unsafe hoisting and rigging activity observed

- A suspended load must never be moved over personnel or personnel allowed to stand or pass under a suspended load
- Barricades and flagging must be erected when the swing radius of rotating equipment (superstructure or counterweight) might create a hazard to personnel in the area. If the rotating equipment is eight feet above the surrounding personnel access level, barricades or flagging are not required
- Load lines must be carefully inspected each time they are rigged and each time they are taken down
- Slings must be protected from a load's sharp edges and corners, and shall not be jerked when moving a load (jerking may triple the load on a sling). Cable slings must be inspected regularly, destroyed if defective, and hung up when not in use
- Tag lines are required on all loads to minimize shifting or swaying while being hoisted or lowered unless use of a tag line creates an additional safety hazard (i.e., potential for entanglement, contact with energized lines, etc.) As many tag lines as are necessary are to be used to control the load
- Specific hoisting requirements for crane suspended personnel platforms must be followed if used
- If hoisting and rigging equipment is damaged while in use or becomes defective, the equipment must be immediately tagged as defective, removed from service, and reported to the SSHO. Defective or damaged rope or cable is to be cut immediately to prevent further use.

3.2.17 Inclement Weather and Adverse Environmental Conditions

In cases of inclement weather for outside work locations or other adverse environmental conditions (i.e., strong winds, rain, snow, lightning, hurricane, tornado, earthquake) the following safety instructions are required:

- Presence of strong winds requires stoppage of affected work activities at elevated work locations (e.g., towers, roofs, ladders, scaffolds, platforms) and stoppage of use of equipment whose safe operation can be affected by high winds (i.e., drill rigs, aerial lifts, cranes)
- Presence of heavy rain or snow requires stoppage of affected work activities where the heavy rain or snow can create safety hazards due to limited visibility, wet work surfaces, slippery equipment controls, increased electrical hazards, cold stress, etc.
- Presence of lightning requires stoppage of affected work activities where lightning presents an increased safety hazard of electrocution (e.g., cranes, heavy equipment, drill rigs, tanks, towers)
- Occurrence of a hurricane, tornado, or earthquake requires stoppage of affected work activities and evacuation of personnel from excavations and trenches, confined spaces, and buildings of questionable stability

- In case of work stoppage due to inclement weather conditions or other adverse environmental conditions, work will not resume until an all clear signal has been communicated by the SSHO to affected personnel. In case of work stoppage due to lightning, stay under shelter 30 minutes after last show of lightning or sound of thunder clap
- In the case of severe weather conditions, emergency evacuation procedures will be established where high winds, strong storms, tornadoes, hurricanes, and floods are a potential occurrence. The SSHO will monitor the local weather conditions and advise the PM when the U.S. Weather Service issues severe storm warnings. When a severe weather warning is issued, the Site Superintendent and SSHO will begin taking actions to secure the worksite. In the event of impending severe weather conditions, personnel will be advised of the hazard, and an evacuation order will be issued by the SSHO. All site personnel will immediately evacuate the work area to a designated location (i.e., hotel). The SSHO will notify the PM and advise him that all site personnel are evacuating the area. The SSHO will maintain contact with site personnel and provide the PM with periodic updates as to the whereabouts of all site personnel. Site personnel will remain outside the evacuation area at a designated location until notified by the PM that it is safe to return to the work area. After severe weather conditions have passed, the Site Superintendent and SSHO will mobilize to the worksite, inspect the condition and security of the site, and make any necessary response actions to correct unacceptable conditions.

3.2.18 Miscellaneous Physical Hazards

Miscellaneous physical hazards and safety procedures to be followed are reviewed with personnel in safety meetings and may include discussion of the following topics:

- Poor housekeeping
- Poor illumination
- Overhead obstructions
- Sharp objects
- Uneven walking surfaces
- Slippery work surfaces
- Tripping hazards
- Fall hazards.

3.3 Biological Hazards

Biological hazards that may potentially be encountered during site work include:

- Poisonous plants
- Venomous snakes
- Venomous spiders
- Rodents
- Insects.

3.3.1 Poisonous Plants

Contact with poisonous plants such as poison oak, poison ivy, or poison sumac can result in dermatitis. Poison oak is a biological hazard that causes reaction in more than 50 percent of the population. Poison oak has green leaves in the spring and summer, and red and yellow leaves in the fall that are found in sets of three. This trait is easily remembered by an old rhyme "leaves of three, let them be." Black dots of dried sap (resin) on the leaves are also characteristic of the plant. It is the resin called "urushiol," derived from the Japanese word for "sap," that poses a threat to sensitive individuals. The skin reacts to the resin upon contact causing dermatitis characterized by linear streaks and red bumps where the plant has brushed against the skin. Contact with the smoke from burning poison oak also causes severe reactions in the respiratory tract and exposed skin in sensitive individuals. Signs and symptoms of exposure are redness, swelling, blisters, and intense itching. Blisters form within 24 hours, weeping, crusting and scaling of the blisters within a few days, and complete healing occurs in about 10 days.

Poison oak first-aid procedures are: Washing, without scrubbing, of the affected area with mild soap and water, application of a paste of baking soda and water on the area several times a day, or application of an anti-cortical cream or lotion, such as Calamine or Caladryl, to help soothe the area. Antihistamines, such as Benadryl, may also help dry up the sores. If the condition worsens or persists and affects large areas of the body or the face, see a doctor. It may be necessary to give anti-inflammatory drugs, such as corticosteroids, or other medications to relieve discomfort.

3.3.2 Venomous Snakes

Venomous snakes, primarily the rattlesnake, may be encountered during site work. The rattlesnake has a series of dark and light bands near the tail just before the rattles that are different from the rest of the body. Rattlesnake bite signs and symptoms of envenomation include: fang marks; metallic or rubbery taste in mouth; tingling of the tongue; numbness; swelling within 10 minutes of bite; nausea, weakness, temperature change; and discoloration within 3-6 hours.

Rattlesnake precautions include: Avoid walking in areas known to be populated with snakes; avoid traveling on foot at night; avoid traveling off trails or paths in grassy or brush-laden areas; do <u>not</u> climb into rocky areas without visual inspection for snakes; be alert when moving debris as snakes seek shelter in shaded areas; wear high-top boots and long pants when walking in grassy areas; clear brush from around buildings, check/repair leaky faucets, and keep trash in containers with secure lids. If a snake is encountered, look around, there may be others, then turn around and walk away on the same path traveled.

Rattlesnake bite first-aid procedures are: Summon emergency medical help immediately; have victim stay calm and remain motionless; position victim so that bite is kept below heart level; do <u>not</u> use ice, cold packs, sprays, alcohol, or any drugs; do <u>not</u> use a tight tourniquet but instead apply a light constricting band above the bite (be able to insert finger under band) and do <u>not</u> release the band unless it is too tight from swelling; do <u>not</u>

make an incision across the bite to suck out the venom; and do not wait to see if symptoms develop, seek medical attention as soon as possible.

3.3.3 Venomous Spiders

Venomous spiders, such as the black widow spider or the brown recluse spider, may be encountered during site work. Spiders are usually found in dark, cool, protected areas and such areas should be inspected before placing hands or feet in these areas. Venomous spiders are commonly found in woodpiles, sheds, basements, garages, and privies.

The primary species of black widow spider encountered has a glossy black appearance with an orange-red hourglass shape on the underside of the body. Black widow spider bite signs and symptoms are: Initial pain followed by dull, occasionally numbing pain in the affected extremity; pain and cramps in one or several of the large body muscles; abdominal pain and cramping; sweating, increased salivation, anxiety, weakness, headache, and dizziness; and severe cases can result in uncontrollable muscle spasms, coma, and respiratory failure. Black widow spider bite first-aid procedures are: wash wound; apply a cold pack; and get medical care (e.g., muscle relaxants; antivenin)

The brown recluse spider is also known as the "violin or fiddle back" spider and is light brown in color with a darker brown violin-like marking on the top of the body. The brown recluse spider is non aggressive, and most bites occur when the spider is trapped in clothing being put on, stepped on, and when areas where the spider resides are disturbed. Brown recluse spider bite signs and symptoms are: Localized burning sensation within 2 hours to 8 hours with itching and redness; small blanched area around immediate bite area appears; reddened area enlarges and becomes purple during subsequent 1 hour to 8 hours; and fever, malaise, stomach cramps, nausea, vomiting, and some cases have resulted in death. Brown recluse spider bite first-aid procedures are: wash wound; apply a cold pack; and seek immediate medical care.

3.3.4 Rodents

Rodents include rats, mice, squirrels, and other related mammals and are characterized by gnawing and nibbling traits. Rodents can act as a vector for many diseases that may be transmitted directly or through other vectors such as fleas or ticks. Diseases that can be transmitted include plague, typhus, Leptospirosis, relapsing fever, and others including Hantavirus pulmonary syndrome.

3.3.5 Insects

Ant bites and bee stings can be deadly to those who are hypersensitive. Anaphylactic shock can occur to sensitized individuals upon stinging. Signs and symptoms of envenomation are usually local pain, redness, itching, and swelling. Sensitive individuals may have more serious symptoms such as welts, itching palms and feet, headache, nausea, vomiting, labored breathing, and in severe cases, respiratory paralysis or heart failure. Bee precautions include: Conduct a reconnaissance of areas where bee, hornet and wasp hives may be encountered (i.e., clearing and grubbing) before beginning work in an area; apply insecticide (where allowed) to rid the work area of bees; ensure that site

personnel who have a recent history of bee, hornet and/or wasp stings have reported this to the SSHO; hypersensitive individuals should carry a bee sting injection kit prescribed by the physician with them in case of emergency; and over-the-counter antihistamine medication should be available in case of a bee sting.

3.4 Radiological Hazards

No radiological hazards are expected for site work.

3.5 Ordnance and Explosives Hazards

No ordnance and explosive hazards are expected for site work.

3.6 Dust Control

Airborne dust will be controlled at work sites using water spray application, as necessary.

3.7 Activity Hazard Analyses

Activity Hazard Analyses (AHAs) are prepared before beginning each major phase of work operations. The AHAs summarize and review hazards and control measures for primary site tasks. The AHA defines the activities to be performed and identifies, in summary form, the sequence of work, specific hazards anticipated, and control measures to be implemented to eliminate or reduce each hazard to an acceptable level. Work does not proceed on that phase of work until the AHA has been accepted by the COR and the AHA has been reviewed with personnel involved with the activity. The AHA is periodically reviewed and modified when appropriate to address changing site conditions or operations. AHA modification occurs only with the concurrence of the SHM, PM, Site Superintendent, SSHO, and COR.

AHAs for the following major project tasks are provided in Attachment 6:

- Mobilization and Site Preparation
- EW/MW Installation
- Aquifer Pump Testing
- MW and Boring Abandonment
- Pipe Trenching and Installation
- Surveying
- Building Demolition
- Groundwater Well Pump – 1 Temporary Bypass
- GTS Building and Pump House Construction
- GTS Equipment Installation
- GTS Electrical Installation
- GTS Supervisory Control and Data Acquisition System Installation
- GTS Water Supply Piping
- Groundwater Well Sampling
- Start-up and Performance Testing
- Excavation, Grading and Backfilling for Flood Storage Creation

- Concrete Reinforcement and Formwork
- Concrete mixing, placement, curing and finishing
- Transportation and Disposal of Waste/Spoils
- Site Restoration and Demobilization.

4.0 EXPOSURE MONITORING

Air monitoring will be necessary to determine personnel exposures to chemical contaminants and/or physical agents during various project activities. The SSHO, or designee, will be responsible for completing air monitoring activities during field operations where there is potential exposure to combustible gases, oxygen deficiency, and/or airborne contaminants above OSHA 8-hour time-weighted average (TWA) and 15-minute short-term exposure limit (STEL) PELs or ACGIH TLVs. A description of the plan for exposure monitoring to be implemented during the project is provided in this section of the SSHP (see Table 2).

4.1 Air Contaminants

The air contaminants that may be encountered during project fieldwork are VOCs, asbestos, and lead.

4.2 Exposure Monitoring Plan

Air monitoring for VOCs, asbestos, and lead will be conducted during the project scope of work (see Table 2). The SSHO or designee completes exposure monitoring. Should action level concentrations be exceeded, response actions will be initiated to implement engineering controls, safe work practices, upgrade or downgrade in PPE, work stoppage, emergency evacuation, and notification and evaluation by the PM and SSHO. The SSHO is responsible for maintaining copies of applicable monitoring records at the site for the duration of the project. The SSHO notifies site personnel of air monitoring results through correspondence or posting of information.

4.2.1 Volatile Organic Compounds

Monitoring for VOCs is conducted during contaminated soil handling and other operations where the presence of VOCs is suspected. If VOCs are detected or suspected to be present in an area, sampling of the work area and breathing zone of workers is conducted periodically during work. VOC measurements that are below 5 parts per million (ppm) will be considered acceptable for Level D protection work. If VOCs exceed 5 ppm, but are less than 50 ppm, the SSHO will implement requirements for use of engineering controls, safe work practices, and respiratory protection.

VOCs will be measured with a photoionization detector (PID). The PID (RAE Systems MiniRAE 2000, Thermo Environmental 580B OVM, or equivalent) uses photoionization to detect compounds that have an ionization potential below the energy of the lamp installed in the instrument. Lamp energy is measured in electron volts (eV) and most PIDs have a 10.6 eV lamp installed. The PID measures VOCs within a range of 0.1-2,000 ppm. The PID is calibrated before use to a known concentration of isobutylene calibration gas (or equivalent).

4.2.1.1 VOC Monitoring Action Levels:

- VOC concentrations in the workers breathing zone are less than 25 ppm. ACTION: Use Level D protection. Contact the SSHO to evaluate

- VOC concentrations in the workers breathing zone are greater than, or equal to, 25 ppm (sustained over a 1-minute period in the breathing zone), and less than 50 ppm. ACTION: Use Level C protection. Contact the SSHO to evaluate.

- VOC concentrations in the workers breathing zone are greater than, or equal to, 50 ppm. ACTION: Stop work. Contact the SSHO to evaluate.

4.2.2 Asbestos

4.2.2.1 Asbestos Worker Monitoring

Monitoring for asbestos is conducted to determine representative exposures of personnel during activities involving asbestos handling. Exposure monitoring representative of each work task or worst-case situation is completed to establish a negative exposure assessment or to verify the adequacy of protection levels.

Asbestos abatement worker exposure monitoring is completed from the collection and analysis of breathing zone air samples that are representative of 8-hour TWA and 30-minute Excursion Limit (EL) exposures. Eight-hour TWA monitoring consists of one or more samples that represent full-shift worker exposures. Thirty-minute EL monitoring consists of one or more samples that represent exposures that are most likely to produce worker exposures above the EL.

Exposure monitoring samples are collected and analyzed according to the "OSHA Reference Method" procedures of the OSHA standard (29 CFR 1926.1001 Appendix A). For asbestos exposure monitoring, personal sampling pumps are used to draw air through 25-millimeter (mm) diameter, 0.8-micrometer (µm) pore-size, mixed cellulose ester filters in carbon-filled polypropylene cassettes with 50-mm extension cowls. Air samples are collected "open face" at flow rates between 1 and 2.5 liters per minute (LPM) to determine both 8-hour TWA and 30-minute EL exposures. Sample collection filters are placed in worker breathing zones. Air sampling pumps are calibrated before, and after sampling periods (pre-/post-calibration), with a rotameter, electronic bubble meter calibrator, or equivalent. The average of the pre- and post-calibration is used as a measure of the "true" flow rate.

A minimum of two field blank samples (or 10 percent of total samples, whichever is greater) is collected for each set of samples submitted for analysis. Air samples are analyzed at an American Industrial Hygiene Association (AIHA)-accredited laboratory by phase contrast microscopy (PCM) for fibers according to the OSHA Reference Method. Fibers counted during analysis are assumed to be asbestos unless otherwise reanalyzed by Transmission Electron Microscopy (TEM) for asbestos confirmation.

Abatement-related work is suspended if worker exposure monitoring results indicate airborne asbestos concentrations in excess of action levels established for the PPE in use. Work is resumed when the appropriate level of PPE is donned. Affected workers are required to be notified of air monitoring results through individual correspondence or posting of information.

4.2.2.2 Asbestos Worker Exposure Monitoring Action Level

Asbestos concentrations in the worker breathing zone is greater than, or equal to the OSHA PEL (0.1 f/cc as an 8-hour TWA exposure) or Excursion Limit (1 f/cc as a 30-minute exposure). ACTION: Advise the Asbestos CP and SSHO. Use Level C protection. Asbestos CP and SSHO to monitor for compliance with asbestos regulations (29 CFR 1926.1101).

4.2.2.3 Asbestos Area Monitoring

Area air monitoring is completed, as required, while remediation/abatement operations are in progress. Area sampling is conducted at the perimeter of the regulated area during these activities. Area air monitoring results that indicate airborne fiber concentrations above 0.01 f/cc, or above background levels, whichever is greater, will require modification of the removal method and/or technique to reduce airborne fiber concentrations.

For area air monitoring, personal sampling pumps, or high-volume air sampling pumps, are used to draw air through 25-mm-diameter, 0.8-µm pore size, mixed-cellulose ester filters in carbon-filled polypropylene cassettes with 50-mm extension cowls. Air samples are collected "open face" at flow rates between 1 and 2.5 LPM. Air sampling pumps are calibrated before and after use (pre-/post-calibration) with a rotameter or electronic bubble meter calibrator (or equivalent). The average of the pre- and post-calibration is used as a measure of the “true” flow rate. A minimum of two field blank samples (or 10 percent of total samples, whichever is greater) is collected for each set of samples submitted for analysis. Air samples are analyzed at an AIHA-accredited laboratory for "fibers" by PCM per the OSHA reference method. Fibers counted during analysis are assumed to be asbestos unless otherwise reanalyzed by TEM for asbestos confirmation.

4.2.2.4 Asbestos Area Air Monitoring Action Levels:

Asbestos area monitoring concentrations at the perimeter of the regulated area are greater than or equal to 0.01 f/cc, or above background levels. ACTION: Modify the removal method and/or technique to reduce airborne fiber concentrations. Contact the Asbestos CP and SSHO to evaluate. SSHO to advise the COR.

4.2.3 Lead

4.2.3.1 Lead Worker Monitoring

The SSHO is responsible for coordinating exposure monitoring during field operations where there is potential exposure to lead. Monitoring is required to determine personnel

exposures to lead during site work. Monitoring during project operations is completed by the Lead CP, or designee. Exposure monitoring results are compared against the OSHA action level of 30 micrograms per cubic meter (µg/m^3) for an 8-hour TWA exposure and a PEL of 50 µg/m^3 for an 8-hour TWA exposure. Personal air monitoring samples are collected during the performance of lead-related work. Monitoring is conducted on those site personnel who are expected to have exposures to lead above the action level. Exposure monitoring representative of each work task or worst-case situation is conducted to establish a negative exposure assessment or to verify the adequacy of protection levels. Lead exposure monitoring is completed from the collection and analysis of breathing zone air samples that are representative of 8-hour TWA exposures. Eight-hour TWA monitoring consists of one or more samples that represent full-shift worker exposures. If lead airborne concentrations exceed respirator upgrade concentrations, response actions are to be initiated to implement additional engineering controls, safe work practices, or upgrade in respiratory protection.

Personal sampling pumps are used to collect air samples on 37-mm diameter, 0.8-µm pore-size, mixed- cellulose ester filters. Air samples are collected in worker breathing zones at flow rates between 1 and 4 LPM to determine 8-hour TWA exposures. A minimum of two field blank samples (or 10 percent of total samples, whichever is greater) is collected for each set of samples submitted for analysis. Air samples are analyzed at an AIHA-accredited laboratory by atomic absorption spectrophotometry in accordance with the National Institute for Occupational Safety and Health (NIOSH) 7082 or 7300 Method. Air sampling pumps are calibrated before and after use (pre-/post-calibration) with an electronic bubble meter calibrator, rotameter (calibrated against a primary standard), or equivalent. The average of the pre- and post-calibration is used as a measure of the "true" flow rate. Where the pump flow rate variation is greater than 5 percent, the sampling is repeated.

4.2.3.2 Lead Worker Exposure Monitoring Action Level:

- Airborne lead concentrations in worker breathing zone are greater than, or equal to, the OSHA action level of 30 µg/m^3 and less than 500 µg/m^3 (PEL of 50 µg/m^3 as an 8-hour TWA exposure). ACTION: Advise the SSHO. Use Level C protection. Lead CP and SSHO to monitor for compliance with lead regulations (29 CFR 1926.62)
- Lead concentrations in worker breathing zone are greater than 500 µg/m^3 (PEL of 50 µg/m^3 as an 8-hour TWA exposure). ACTION: Stop work. Contact the Lead CP and SSHO to evaluate.

4.2.3.3 Lead Area Monitoring

Lead area air monitoring is completed while lead component removal/abatement operations are in progress. Area sampling is conducted at the perimeter of the regulated area during lead removal work activities. Lead area air monitoring concentrations at the perimeter of the regulated area are greater than or equal to 50 µg/m^3, or above background levels, whichever is greater, will require modification of the removal method and/or technique to reduce airborne lead concentrations.

4.2.3.4 Lead Area Monitoring Action Level:

Airborne lead concentrations at the perimeter of the regulated area are greater than or equal to 50 µg/m^3, or above background levels. ACTION: Modify the removal method and/or technique to reduce airborne lead concentrations. Contact the Lead CP and SSHO to evaluate. SSHO to advise the COR.

4.3 Physical Hazard Monitoring

4.3.1 Heat Stress Monitoring

Personnel will be made aware that heat stress can occur during periods of elevated ambient temperatures. This hazard significantly increases with moderate to heavy workloads and when impermeable protective clothing is in use. Personnel will be informed regarding the various forms of heat stress (e.g., heat cramps, heat exhaustion, heat stroke) and the signs and symptoms of exposure: Heat Cramps and Heat Exhaustion: Initial symptoms are cramps, faintness, dizziness or disorientation, and pale, clammy skin. Heat Stroke: Heat stroke is an extremely serious medical emergency with sudden onset and symptoms that include dilated pupils, dry and hot skin, loss of consciousness, and convulsions.

Initial phases of work activity are closely monitored to identify personnel who are more susceptible to heat exposure. Workers are responsible for observing each other and themselves for development of heat stress symptoms. Personnel will be encouraged to drink generous amounts of water and electrolyte replacement fluids (even if not thirsty) to prevent dehydration. Adequate shelter will be provided to protect personnel from direct sun exposure. Sufficient breaks will be provided so that personnel can remove protective clothing and cool down.

A monitoring program for heat stress will be implemented for work in elevated ambient temperatures and are wearing impermeable protective garments. Work/rest regimens will be established and adjusted as required to avoid heat stress. Heat stress monitoring will be completed for site personnel using impermeable protective clothing when ambient temperatures exceed 70°F.

Heat stress monitoring and establishment of work-rest regimens for heat stress prevention will be completed through physiological monitoring of workers heart rate. Heart rate is determined by measuring the worker's radial pulse rate. Monitoring will be completed by site personnel at the beginning of work and following each work period by measuring the radial pulse for 30 seconds and multiplying the value by two. The results will be recorded on a log that will be monitored and maintained by the SSHO. The SSHO will review procedures for heart rate monitoring as a daily safety meeting topic.

4.3.1.1 Heart Rate Monitoring

Complete baseline measurements at the start of work before entering the Exclusion Zone (EZ). Measure the heart rate (HR) by counting the radial pulse for a 30-second period and multiply the value by two to determine the number of beats per minute (bpm). Following

the first work period, measure the HR as early as possible in the resting period. If the HR exceeds 110 bpm, then reduce the next work period by one-third while keeping the length of the rest period the same. Following the next work period, if the HR still exceeds 110 bpm, then again shorten the following work cycle by one-third while keeping the length of the rest period the same. Watch for signs and symptoms of heat stress throughout the work process. Contact the SSHO for an evaluation when a worker's HR exceeds 110 bpm.

4.3.1.2 Heat Stress Monitoring Action Levels: Heart Rate

- HR baseline measurement is greater than or equal to 110 bpm. ACTION: Advise the SSHO. Reduce the work cycle by one-third without changing the duration of the rest period. Advise site personnel to continuously observe the condition of the individual and to immediately report signs of heat stress to the SSHO.

- HR measurement following the first work period exceeds 110 bpm. ACTION: Reduce the next work cycle by one-third without changing the duration of the rest period.

- HR measurement following the next work period still exceeds 110 bpm. ACTION: Again reduce the next work cycle by one-third while keeping the length of the rest period the same.

5.0 SITE CONTROL

Site control procedures are established to: restrict access to controlled areas of the worksite, identify means for site communication, and establish measures for site security.

5.1 Site Work Zones

Site work zones are established based on the type of operations to be conducted in the work zone, the potential for exposure to contaminants, and the potential for contact with other safety hazards. The establishment of controlled work zones (i.e., EZ, contamination reduction zone [CRZ], and support zone) may be required only during specific operations identified by the SSHO. Site work zone requirements are established to limit access to work areas to authorized personnel, prevent the spread of contamination from the work area, and establish site communication and site security measures. Work zone demarcation will be established through the use of caution tape or other means (e.g., barricades, fencing, signs) as approved by the SSHO.

5.1.1 Exclusion or Hot Zone

The EZ is the work zone that represents the area of highest contamination at the site. The EZ will be identified by the SSHO for each work area. The level of protection used within the EZ may vary depending upon the various work tasks to be conducted and is determined by the SSHO.

5.1.2 Contamination Reduction Zone

The CRZ is the work zone that represents the transition area between the EZ and the support zone at the site. Entry to/exit from the EZ will be through a designated location in the CRZ. Upon exit from the EZ, workers will be required to pass through the CRZ before entering the support zone. Personnel decontamination will occur within the decontamination station in the CRZ.

5.1.3 Support Zone

The support zone is the work zone outside of the CRZ that represents the clean areas established at the site. The command post, medical station, equipment and supplies, and other support facilities will be located in the support zone. All breaks, lunch, and meetings will take place in the support zone. Whenever possible, support zone activities will be located upwind of the EZ to reduce the possibility of vapor and/or dust exposures.

5.1.4 Location of Site Work Zones

The EZ generally coincides with the extent of contamination/excavation. The CRZ is located between the EZ and the support zone. The CRZ comprises the personnel and equipment decontamination area.

5.2 Site Control Log

A log of personnel visiting, entering, or working at the site will be maintained. A Site Control Log form will be completed daily. This log includes entries for the date, name, organization, and time entering and exiting the site. The Site Control Log is maintained by the SSHO in the CAPE project office. All personnel are required to report and sign in at the CAPE project office upon arrival at the site. Personnel who wish to enter a CRZ or EZ at the site must provide to the SSHO copies of required training, medical fitness for duty, and respirator fit testing documentation before site entry is authorized.

5.3 Site Communications

Site communications are critical to allow for expedient communication of operational instructions, safety information, and emergency communications. Site communications include:

- A telephone will be maintained on site with the Site Superintendent and SSHO
- Emergency communication instructions are found in the emergency response plan section of the SSHP.

5.4 Site Security

Site security measures are required to prevent unauthorized access to controlled areas of the site. Site security measures include:

- Personnel are required to check-in at the project office and sign in on the Site Control Log form before entering controlled areas of the site. Unauthorized persons are not allowed into the controlled areas of the site
- Temporary fencing, barricades, signs, and/or caution tape will be used for delineation of controlled areas, if needed
- Protection is required around open holes during off hours (e.g., temporary fencing, barricades with flashing lights and signs/caution tape)
- Site personnel are required to comply with facility security measures.

6.0 PERSONAL PROTECTIVE EQUIPMENT

PPE will be required for certain field operations based on the potential for contaminant exposures. The SSHO and SHM will establish appropriate levels of protection for each work activity based on review of historical site information, existing contaminant data, and evaluation of the potential for exposure. The SSHO and SHM will establish action levels for upgrade or downgrade in the initial minimum levels of protection.

PPE requirements will be referenced to the EPA levels of protection system that consists of four levels of protection (A-D) as described below:

Level A Protection: Level A protection is worn when the highest level of respiratory, eye, and skin protection is needed. Level A protection is used for initial entry into certain confined spaces, entry into areas with extensive skin and respiratory hazards, and entry into areas where the hazard of significant exposure to unknown contaminant concentrations exists.

Level B Protection: Level B protection is worn when the highest level of respiratory and eye protection is needed, but a lesser level of skin protection is needed than for Level A. Level B protection is used for initial entry into certain confined spaces, entry into areas with significant skin and respiratory hazards, and entry into areas where the hazard of significant exposure to unknown contaminant concentrations exists.

Level C Protection: Level C protection is worn when a similar level of skin protection as Level B is needed, but a lower level of respiratory protection is needed. Level C protection is used when limited skin hazards exist and concentrations of contaminants are within the protection factor of an APR.

Level D Protection: Level D protection is worn when minimal protection is needed and activities are not likely to involve direct contact with contaminated materials. Modified-Level D protection is used when some skin protection is desired for protection against accidental skin contact with contaminants.

6.1 PPE Requirements

It is anticipated that Level C, Modified Level D, and Level D protection use will be required for project activities. Level A and B work are not expected. The primary basis for the level of protection selection is as follows:

- Level C protection is used for work where there is potential for low-level exposure to air contaminants above exposure monitoring plan action levels and limited direct contact with contaminants
- Modified-Level D protection is used for work where there is no potential for significant air contaminant exposure and protective clothing is used for protection from limited direct contact with contaminants
- Level D protection is used for work where there is no significant potential for contaminant exposure.

6.2 Levels of Protection for Major Work Tasks

Levels of protection to be used for the following major project activities are reviewed below:

- Mobilization and Site Preparation
- EW/MW Installation
- Aquifer Pump Testing
- MW and Boring Abandonment
- Pipe Trenching and Installation
- Surveying
- Building Demolition
- Groundwater Well Pump – 1 Temporary Bypass
- GTS Building and Pump House Construction
- GTS Equipment Installation
- GTS Electrical Installation
- GTS Supervisory Control and Data Acquisition System Installation
- GTS Water Supply Piping
- Groundwater Well Sampling
- Start-up and Performance Testing
- Excavation, Grading and Backfilling for Flood Storage Creation
- Concrete Reinforcement and Formwork
- Concrete mixing, placement, curing and finishing
- Transportation and Disposal of Waste/Spoils
- Site Restoration and Demobilization.

Mobilization and Site Preparation: Level D protection will be used during mobilization and site preparation work tasks (i.e., laydown area setup, work zone delineation, safety fence and sign installation, utility locating and mark-out, brush removal, mowing and obstacle removal, erosion and sediment controls). Level D protection is used for activities that do not involve exposure to contaminants.

EW/MW Installation: Level D and Modified-Level D protection will be used for EW/MW installation activities. Level C protection upgrade will occur if airborne contaminant concentrations exceed exposure monitoring action levels.

Aquifer Pump Testing: Level D and Modified-Level D protection will be used for pump testing work tasks.

MW and Boring Abandonment: Level D protection and Modified-Level D protection will be used for MW and boring hole abandonment activities. Level C protection upgrade will occur if airborne contaminant concentrations exceed exposure monitoring action levels.

Pipe Trenching and Installation: Level D protection and Modified-Level D protection will be used for trenching, excavating soil removal, and piping installation activities. Level C protection upgrade will occur if airborne contaminant concentrations exceed exposure monitoring action levels.

Surveying: Level D protection will be used for site surveying work activities.

Building Demolition: Level D protection and Modified-Level D protection will be used for most building demolition activities. Level C protection upgrade will be used for asbestos and lead abatement activities.

Groundwater Well Pump – 1 Temporary Bypass: Level D protection and Modified-Level D protection will be used for groundwater well pump bypass activities. Level C protection upgrade will occur if airborne contaminant concentrations exceed exposure monitoring action levels.

GTS Building and Pump House Construction: Level D protection and Modified-Level D protection will be used for general construction activities.

GTS Equipment Installation: Level D protection and Modified-Level D protection will be used for GTS equipment installation (equipment and electrical) activities. Level C protection upgrade will occur if airborne contaminant concentrations exceed exposure monitoring action levels.

GTS Water Supply Piping: Level D protection and Modified-Level D protection will be used for water supply piping activities. Level C protection upgrade will occur if airborne contaminant concentrations exceed exposure monitoring action levels.

Groundwater Well Sampling: Level D protection and Modified-Level D protection will be used for groundwater sampling activities. Level C protection upgrade will occur if airborne contaminant concentrations exceed exposure monitoring action levels.

Excavation, Grading and Backfilling for Flood Storage Creation: Level D protection and Modified-Level D protection will be used for soil removal and earthwork related activities. Level C protection upgrade will occur if airborne contaminant concentrations exceed exposure monitoring action levels.

Concrete Reinforcement and Formwork, Mixing, Placement, Curing and Finishing: Level D and Modified Level D protection will be used for all concrete and masonry related work activities. Level C protection upgrade will occur if site conditions warrant a need for an upgrade in worker protection.

Transportation and Disposal of Waste/Spoils: Level D protection and Modified-Level D protection will be used for transportation and disposal of waste activities. Modified-Level D will be used if conditions warrant the need to handle waste for housekeeping tasks.

Site Restoration and Demobilization: Modified Level D and Level D protection will be used for site cleanup, backfill and compaction, and demobilization activities. Modified Level D protection will be used for equipment decontamination before demobilization from the site. Level D protection will be used for general site cleanup activities.

6.3 Levels of Protection Description

6.3.1 Level C Protection

Level C protection consists of:

- Air-Purifying Respirator (APR) or Powered APR (PAPR), full-face, or half-face with dust filter (P-100)
- Disposable coveralls, chemical-resistant (Kleenguard® or Tyvek® for dust exposure; Polyethylene Tyvek® for incidental splash protection; polyvinyl chloride [PVC] for liquid contact protection)
- Boots, steel-toed/shank, chemical-resistant (PVC or equivalent) with optional boot covers (PVC or latex)
- Gloves, inner, chemical-resistant (surgical nitrile or latex) and outer gloves, chemical-resistant (nitrile for dexterity; PVC for heavy work)
- Hard hat; safety glasses with side shields (for use with half-face respirator); goggles (for use with half-face respirator when liquid splash hazard present); ear protection (if noise levels exceed 85 dBA); high-visibility safety vest with reflective striping (if vehicle or equipment traffic); and two-way radio communication (optional).

6.3.2 Modified-Level D Protection

Modified-Level D protection consists of:

- Disposable coveralls (Kleenguard® or Tyvek® for dust exposure; Polyethylene Tyvek® for incidental splash protection; PVC for liquid contact protection)
- Boots, steel-toed/shank, chemical-resistant (PVC or equivalent) or steel-toed work boots (leather) with boot covers (PVC or latex)
- Gloves, inner, chemical-resistant (surgical nitrile or latex) and outer gloves, chemical-resistant (nitrile for dexterity; PVC for heavy work)
- Hard hat; safety glasses with side shields; goggles (if liquid splash hazard); face shield (polycarbonate for pressure washing); ear plugs (if noise levels exceed 85 dBA); high-visibility safety vest with reflective striping (if vehicle or equipment traffic); and two-way radio communication (optional).

6.3.3 Level D Protection

Level D protection consists of:

- Coveralls or standard work clothing
- Steel-toed work boots (leather)
- Hard hat; safety glasses with side shields; goggles (if liquid splash hazard); face shield (polycarbonate for pressure washing); gloves (if material handling-cotton or leather); ear plugs (if noise levels exceed 85 dBA); high-visibility safety vest with reflective striping (if vehicle or equipment traffic); and two-way radio communication (optional).

6.4 Respiratory Protection

Respiratory protection will be selected, used, and maintained in accordance with the CAPE S&H Program Respiratory Protection Standard Operating Procedure (SOP). The SSHO is responsible for implementing the respiratory protection program at the site. The SSHO is responsible for ensuring that workers have had required medical examinations, respirator training, and respirator fit testing current within the past year. SSHO respiratory protection program duties include:

- Ensuring that workers complete medical exams and are approved for respirator use
- Arranging for and/or conduct respirator training
- Conducting and documenting respirator fit tests
- Ensuring the availability of appropriate respirators and supplies
- Reviewing tasks requiring the use of respiratory protection
- Monitoring work areas and operations continually to identify respiratory hazards
- Monitoring and enforcing the proper use of respirators
- Ensuring that respirators are properly cleaned, maintained, and stored
- Maintaining respirator training and fit testing records.

6.4.1 Respirator General Use Procedures

Respiratory protection requirements include:

- Respirator users are evaluated first by a licensed physician to determine their physical ability to use a respirator. The licensed physician must provide a written fitness for duty statement that the worker may safely use a respirator. The SSHO is responsible for ensuring that workers have required medical exams and copies of medical certifications are maintained and available according to OSHA recordkeeping requirements
- Personnel using APRs must have passed a qualitative fit-test within the past year. Qualitative fit testing will be conducted by the SSHO, as needed, and will be documented on a Respirator Fit Testing Record form

- Visitors will be required to provide documentation of respiratory protection instruction and fit testing for entry into controlled work zones that require respirator use
- Personnel must use respirators under conditions according to training and instruction received. Respirators shall be used according to manufacturer recommendations.
- Facial hair is not allowed that interferes with respirator fit
- Personnel must conduct a user seal check each time that they don a respirator. Employees can use either a positive or negative pressure user seal check (depending on which test works best for them).
- Personnel are permitted to leave the work area to maintain their respirator (employees should notify their supervisor before leaving the area) for the following reasons: to clean their respirator if the respirator is impeding their ability to work; change filters or cartridges; replace parts; or to inspect respirator if it stops functioning as intended
- Whenever respirators are required, no person will remove a respirator in the EZ or CRZ, or enter these work zones without a respirator
- Personnel are not permitted to wear tight-fitting respirators if they have any condition, such as facial scars, facial hair, or missing dentures, that prevents them from achieving a good seal. Personnel are not permitted to wear headphones, jewelry, or other articles that may interfere with the respirator facepiece-to-face seal.
- For any malfunction of an APR (e.g., breakthrough, facepiece leakage, or improperly working valve), the respirator user should inform his or her supervisor that the respirator is not functioning properly and go to the designated safe area to maintain the respirator. The supervisor must ensure that the employee receives the needed parts to repair the respirator or is provided with a new respirator.

6.4.2 Respirator Cleaning

Respirators are to be regularly cleaned and disinfected after each use by the user. Respirators issued for the exclusive use of an employee shall be cleaned as often as necessary to maintain effective performance. Emergency use respirators are to be cleaned and disinfected after each use.

The following procedure is to be used when cleaning and disinfecting respirators:

1. Disassemble respirator, removing any filters, canisters, or cartridges
2. Wash the facepiece and parts in a mild detergent with warm water (do <u>not</u> use a solvent)
3. Rinse completely in clean warm water
4. Wipe the respirator with anti-bacterial disinfectant wipes
5. Air-dry in a clean area

6. Reassemble the respirator and replace any defective parts
7. Place in a clean, dry plastic bag or other airtight container.

Note: The Supervisor will ensure an adequate supply of appropriate cleaning and disinfecting supplies at the job site. If supplies are low, employees should contact their supervisor.

6.4.3 Respirator Maintenance

Respirators are to be properly maintained by the user at all times in order to ensure that they function properly and adequately protect the employee. Maintenance involves a thorough visual inspection for cleanliness and defects. Worn or deteriorated parts will be replaced prior to use. Components will not be replaced or repairs made beyond those recommended by the manufacturer. Repairs to regulators or alarms of atmosphere-supplying respirators will be conducted by the manufacturer.

The following items/parts will be inspected by the user before each use of a respirator:

- Facepiece: Inspect for cracks, tears, holes, facemask distortion, and cracked or loose lenses/shield
- Head straps: Inspect for breaks, tears, loss of elasticity, and broken buckles
- Valves: Inspect for residue or dirt; cracks, tears, loss of elasticity
- Filters/cartridges: Inspect for approval designation, gaskets, cracks, dents in housing, proper cartridge for hazard, and end-of-service-life-indicator (if applicable).

6.4.4 Respirator Change-Out Schedules

Employees wearing APRs or PAPRs with P-100 filters for protection against airborne particulates shall change respirator cartridges if they experience difficulty breathing (i.e., resistance) while wearing their respirator.

6.4.5 Respirator Storage

Respirators must be stored in a clean, dry area and according to manufacturer recommendations. Employees will clean and inspect personal-issue APRs and store their respirator in a plastic bag kept in their possession. The employee will place his/her name on the bag and that bag will only be used to store that employee's respirator. New respirators in storage shall be kept in the original manufacturer's packaging until issue.

6.4.6 Defective Respirators

Respirators that are defective or have defective parts shall be taken out of service immediately. If, during an inspection, an employee discovers a defective respirator, he/she is to bring the defective respirator to his or her supervisor. The supervisor will decide whether to: Temporarily take the respirator out of service until it can be repaired;

perform a simple fix on the spot such as replacing a head strap; or dispose of the respirator due to an irreparable problem or defect.

6.5 PPE Maintenance

PPE is required as directed by the SSHP or the SSHO. Personnel are responsible for proper use of required PPE. Torn protective clothing or damaged PPE will be immediately repaired or replaced. Contaminated PPE will be disposed of properly (as contaminated waste). Maintenance of reusable personal issue PPE (e.g., hard hats, safety glasses, steel-toed PVC boots) is the responsibility of each worker for individually assigned equipment. Personnel are responsible for proper maintenance, cleaning, storage, and use of individually assigned respirators. Respirators will be cleaned after each use, placed in a plastic bag, and inspected before using again.

7.0 DECONTAMINATION

Personnel and equipment decontamination measures will be required for site work. Personnel and equipment decontamination requirements will be identified by the SSHO. It is anticipated that dry decontamination measures will be used for site work.

7.1 Personnel Decontamination

The SSHO will determine the procedures to be used for personnel decontamination. A dry decontamination method will be used when there is limited contact with contaminants (i.e., soil excavation). A wet decontamination method will be used when there is significant contact with contaminants due to contact with liquid contaminants, muddy surface contamination, or other heavy contamination. General personnel decontamination requirements include:

- The SSHO must review specific decontamination procedures with personnel required to enter controlled work zones of the site and will monitor and ensure use of prescribed decontamination procedures
- Personnel will be instructed to minimize contact with contaminants, to the extent feasible, to reduce the potential for personal or equipment contamination
- Personnel decontamination occurs at the decontamination station established within the CRZ for each work location. Decontamination activities occur in the CRZ after working in the EZ and before entrance into the support zone
- Personnel must clean, remove, and place contaminated disposable protective clothing in marked containers before leaving the CRZ
- Workers will be instructed to practice good personal hygiene by washing the face, hands and forearms before eating, drinking, smoking, etc.

7.1.1 Dry Decontamination Procedures

A dry decontamination method will be used when there is limited contact with contaminants and when the SSHO has determined that a wet decontamination method is not necessary. The decontamination sequence should be completed as follows:

- Station 1 - Equipment Drop: Deposit used equipment on sheet plastic or in container with plastic liner
- Station 2 - Outer Boot Covers and Outer Gloves Removal: Remove outer boot covers and outer gloves. Deposit in container with plastic liner
- Station 3 - Boots and Outer Garment Removal: Remove boots and suit and deposit in containers with plastic liners
- Station 4 - Respirator Facepiece and Inner Gloves Removal: Remove respirator facepiece (avoid touching face with fingers) and deposit on sheet plastic or in plastic bag. Remove inner gloves
- Station 5 - Field Wash: Wash hands and face thoroughly.

7.1.2 Decontamination Procedures – Wet Method

A wet decontamination method will be used when there is significant contact with contaminants (e.g., contact with liquid contaminants, muddy surface contamination, other heavy contamination), or when the SSHO has determined it is necessary. The decontamination sequence should be completed as follows:

- Station 1 - Equipment Drop: Deposit used equipment on sheet plastic or in container with plastic liner
- Station 2 - Boots and Outer Garments Wash/Rinse: Scrub outer boots, outer gloves, and suit with detergent/water solution. Rinse off with water

  Station 3 - Outer Boot Covers and Outer Gloves Removal: Remove outer boot covers and outer gloves. Deposit in container with plastic liner
- Station 4 - Cartridge/Canister or Mask Change-Out: Change-out APR cartridges/canister or face piece as needed. For respirator change-out and return to EZ, don new outer gloves and boot covers, tape at joints, and return to EZ. For entry into the support zone, continue decontamination sequence
- Station 5 - Boots and Outer Garment Removal: Remove boots and suit and deposit on sheet plastic or in containers with plastic liners
- Station 6 - Respirator Face Piece and Inner Gloves Removal: Remove respirator face piece (avoid touching face with fingers) and deposit on sheet plastic or in plastic bag. Remove inner gloves
- Station 7 - Field Wash: Wash hands and face thoroughly.

7.2 Equipment Decontamination

Procedures are required to prevent the spread of contamination from vehicles and equipment used in the EZ into support zone and offsite areas. Equipment will be decontaminated by procedures established by the SSHO.

7.2.1 Equipment Decontamination Facilities and Procedures

A decontamination facility (decontamination pad) will be established as needed for decontamination of vehicles and equipment. Equipment will be decontaminated by precautions and procedures established by the SSHO and include:

- Vehicle and equipment use in the EZ and/or contact of vehicle and equipment tires with contaminated surfaces will be minimized to the extent possible
- Dirt will be brushed or scraped off of vehicles and heavy equipment to remove visible materials before moving from the CRZ off site
- Following decontamination, the equipment will be inspected and an Equipment Decontamination Release Authorization form prepared by the SSHO to document decontamination before equipment will be allowed to move off site.

8.0 GENERAL WORK PRACTICES

8.1 Safety Policy

It is the policy of CAPE to perform work in a safe and healthful manner. The S&H of employees is considered to be of paramount concern in performance of company operations as employees are the company's most important asset and their well being its greatest responsibility. The S&H of every worker must be a primary consideration in every business decision and plan. CAPE management will maintain an S&H program that conforms to the best practice of organizations of this type. To be successful, such a program must encourage proper attitudes toward incident prevention on the part of both supervisors and employees. It also requires cooperation in all S&H program aspects, not only between supervisors and employees, but also between employees and their fellow workers. Only through such a cooperative effort can an effective S&H program be maintained.

One of the primary objectives of the CAPE S&H Program is to prevent incident occurrence. There is no phase of company operations of greater importance than incident prevention. CAPE's S&H goal at is to have incident-free operations. This goal can only be achieved through total and demonstrated commitment to this S&H policy from each individual CAPE staff member. All personnel must recognize and understand that incidents and injuries are preventable.

To establish and maintain an effective S&H program, the following must be accomplished:

- CAPE must provide a safe work environment by having a safe workplace, equipment, and materials
- CAPE must establish safe work operations, safe work rules and procedures, and comply with accepted safe work practices and S&H regulations
- CAPE must provide effective S&H training so that every CAPE staff member has the necessary knowledge to identify potential hazards and the necessary protocols, tools and equipment to appropriately mitigate identified hazards

- CAPE personnel must understand that they have a duty and responsibility to maintain their own safety and the safety of their co-workers, at all times and in all situations
- Everyone must actively support the CAPE S&H Program and embrace the philosophy that "Incidents Can Be Prevented."

8.2 Standard Work Procedures

8.2.1 General Safe Work Practices

Site personnel must work in a safe manner. Standard work procedures for site work include, but are not limited to, the following:

- Personnel must report to work in a ready-to-work state
- Personnel must report to work in suitable work clothing.
- Illicit drugs and alcohol are not allowed on site
- Firearms are not allowed on site
- Horseplay is not allowed on work sites
- Gambling is not allowed on site
- Use of personal radios or other items that may distract attention are not permitted.

8.2.2 Hazard Communication

The SSHO will maintain copies of MSDSs for hazardous substances used during project work. Site personnel will be informed of the hazardous substances they will be working with through SSHP review and attendance at daily safety meetings. Refer to the CAPE Hazard Communication Program SOP for additional guidance and requirements.

8.2.3 Reporting of Hazards and Safety Inspections

Site personnel are encouraged to immediately report unsafe work conditions or unsafe work practices observed to their supervisor and the SSHO without fear of reprisal. The Site Superintendent and the SSHO will conduct periodic safety inspections at the site to identify and correct hazards.

8.2.4 Visitors

Visitors must have approval from the COR and PM before entering controlled areas of the site. Visitors must meet applicable medical and training requirements and review pertinent aspects of the SSHP.

8.2.5 Illumination

Illumination requirements include those contained in the OSHA 29 CFR 1910.120 and 29 CFR 1926.65 Hazardous Waste Operations and Emergency Response standards and in the EM 385-1-1 Section entitled Lighting. In the absence of adequate lighting (5-10-foot

candles) at outdoor construction locations, portable lights, or light stands will be used to illuminate work areas.

8.2.6 Sanitation

Sanitation requirements include those contained in the EM 385-1-1 Section entitled Sanitation. Sanitation procedures include:

- Food, beverages, tobacco products, or cosmetics are not allowed in contaminated areas or potentially contaminated areas. Eating, drinking, chewing gum or tobacco, and smoking are allowed only in designated areas
- Good personal hygiene and decontamination practices will be followed at all times
- Site washing facilities will be provided at the job location and personnel will be required to wash their hands and face when exiting the EZ (field wash station) and before breaks and lunch
- Drinking water will be provided to workers in disposable bottles or portable drinking water dispensers with lids and a tap. Dispensers will be clearly marked "Drinking Water" and will not be used for other purposes. Individual disposable cups will be used. Use of a common cup or dipping from the container is prohibited. Disposable cups will be stored in a sanitary container and a waste receptacle will be available for used cups and empty disposable bottles
- Portable toilets will be readily available at the job location or a vehicle (not the emergency vehicle) will be available to transport workers to nearby toilet facilities.

8.2.7 Housekeeping

Housekeeping requirements include those contained in EM 385-1-1 (14.C) "Housekeeping." Housekeeping procedures policies include:

- Work areas and means of access must be maintained orderly and safe
- Personnel and equipment will be provided to comply with housekeeping requirements
- Daily inspections will be made of work areas for adequate housekeeping and findings recorded on daily inspection reports
- Stairways, passageways, and access ways must be kept free of materials, supplies, and obstructions at all times
- Loose or light material must not be placed on roofs or floors that are not closed in, unless properly secured
- Tools, material, extension cords, hoses, or debris must not cause tripping or other hazards
- Tools, materials, and equipment that could be displaced or fall must be secured

- Empty bags that previously contained lime, cement, or other dust-producing material, must be periodically removed
- Forms, scrap lumber, and debris must be cleared from work areas and access ways in and around building storage yards and other structures
- Protruding nails in scrap wood must be removed, hammered in, or bent over flush with the wood
- Storage and construction sites must be kept free from combustible material accumulation
- Weeds and grass must not be allowed to become overgrown such that it becomes a fire or housekeeping hazard
- Rubbish, brush, long grass, or other combustible matter must be kept from areas where combustible or flammable liquids are stored, handled, or processed
- Liquids, particularly combustible or flammable liquids, must not be allowed to accumulate on floors, walls, etc.
- All spills of combustible or flammable liquids must be immediately cleaned up.

8.2.8 Safety Inspections

Requirements for safety inspections are contained in the EM 385-1-1 Section entitled Program Management. Safety inspection procedures include:

- The SSHO will complete daily safety inspections of work sites to identify and correct hazards. Other contractor personnel may also conduct and document safety inspections. An inspection checklist for construction safety is provided (see Attachment 1).
- The SSHO will record any identified safety and health issues and deficiencies, and will indicate the actions, timetable, and responsibility for correction of deficiencies on the CAPE Safety Inspection Report form, or equivalent. The SSHO will conduct follow-up inspections to ensure identified deficiencies have been corrected, and will document these inspections in a like manner.

8.2.9 Incident Reporting and Investigation

Employees must immediately report all incidents, injuries and illnesses, property damage, liability exposure cases, spills, fires, and near miss incidents to their supervisor or the SSHO. Supervisors are responsible for notifying the Site Superintendent and SSHO, who in turn are responsible for notifying the CAPE PM, SHM, Corporate Risk Manager, and Corporate Health and Safety Manager (CHSM). The SHM and/or CHSM should be contacted immediately in injury or illness cases to assist with coordination of required medical assistance and related workers' compensation case management follow-up.

USACE requires that all accidents be reported to the Contracting Officer (CO)/COR as soon as possible but not more than 24 hours afterwards. The accident shall be thoroughly investigated and the findings of the investigation submitted along with appropriate

corrective actions to the CO/COR, in the prescribed format, as soon as possible but no later than five (5) working days following the accident. Corrective actions shall be implemented as soon as reasonably possible. Immediate accident notification is required for: a fatal injury, a permanent total disability, a permanent partial disability, the hospitalization of three or more people resulting from a single occurrence, and property damage of $200,000 or more. The CAPE PM, Site Superintendent, and/or SSHO are responsible for notifying the COR of all incidents.

Additional important requirements for incident reporting and follow-up are described below.

- Employees must immediately report all incidents, injuries and illnesses, property damage, liability exposure cases, spills, fires, and serious near miss incidents to their supervisor or the SSHO
- In the event of a serious incident, supervisors are responsible for notifying the Site Superintendent and SSHO, who in turn are responsible for notifying the CAPE PM, SHM, Corporate Risk Manager, and CHSM. The CHSM should be contacted immediately in injury or illness cases to assist with coordination of required medical assistance and related workers' compensation case management follow-up
- If a serious injury occurs during the project, the Site Superintendent and SSHO will immediately report the incident to the PM, SHM, COR, and the appropriate government agencies. CAPE will give the COR verbal notification immediately following a lost workday injury, followed by a written notification within 24 hours using ENG FORM 3394, USACE Accident Investigation Report
- The SSHO and the supervisor(s) responsible for an activity involved in an incident will participate in a complete investigation, and will inspect the area or equipment involved (as applicable). This includes completion and filing of ENG FORM 3394, USACE Accident Investigation Report with the COR; and completion and filing of an Incident Report by Supervisor, Incident Statement by Employee, Incident Statement by Witness, Injury and Illness Report, Property Damage, Loss, and General Liability Report, and Vehicle Accident Report, as applicable, with the SHM within 24 hours of the injury (immediately for a serious injury or fatality)
- The CHSM and the SHM must be notified immediately of any incident involving hospitalization of three employees or a fatality. The CHSM and the SHM will conduct an immediate investigation. The CHSM and the SHM are responsible for notifying the jurisdictional OSHA office as soon as possible and no later than 8 hours after the accident. (Note: This notification includes weekend days as 24-hour emergency reporting access is available). The CHSM and the SHM will act as the agency interface upon their investigation. The report to OSHA must include: time and date of accident; employer's name, address, and telephone number; name and job title of person reporting the accident; address of the site of the accident; name of person to contact at the site of the accident; name and address of any injured employee(s); nature of injury; location where the injured employee was moved to; list and identity of other law enforcement agencies

present at the site of the accident; and description of the accident and whether the accident scene has been altered

- The SSHO, with the assistance of the PM and Site Superintendent, will obtain a doctor's first report of injury for every injury or illness requiring medical treatment and will immediately forward to the CHSM
- An injured worker is not allowed back to work until a return-to-work notice issued by the treating physician and negative drug and alcohol test documentation (as applicable) are presented to the SSHO. Any injured worker issued a work restriction will be under the direct supervision of the SSHO and will be assigned work activities within the restriction until a full duty status clearance has been received
- The CHSM will make a telephone report for all claims covered under the CAPE Workers' Compensation Policy. Reports are made to the workers' compensation insurance claim-reporting center where an employer's first report of injury or illness form is completed over the phone. After reporting a claim to the reporting center, the information is faxed by the reporting center to the claims service office to handle the claim. Any subsequent medical bills and reports received for the claim are forwarded to the CHSM who will subsequently mail them to the claims service office
- When a worker returns to work after an injury or illness, the CHSM will contact the claims servicing office to advise them of the actual date of return to work. Questions or inquires are to be directed to the CHSM who will contact the claims service office or the CAPE insurance company, as needed
- The CHSM records each injury or illness on the OSHA Form No. 300, Log of Work-Related Injuries and Illnesses, and the OSHA Form 300A, Summary of Work-Related Injuries and Illnesses. The OSHA 300 form is posted annually no later than February 1 (of the following year) and is kept posted for 3 months (until April 30).

8.2.10 Safety Rule Enforcement

Workers must obey directives from the SSHO. The PM and SSHO may immediately dismiss personnel from the site who do not comply with safety requirements. Site personnel must strictly adhere to established safe work practices and work procedures. Violation of a safety procedure or rule may result in disciplinary action in accordance with the severity of the infraction. The PM, Site Superintendent, or SSHO will report unsafe work performance to company management. Disciplinary action may include the following, depending upon the severity of the safety infraction:

- Verbal warning
- Written warning notice
- Termination of employment
- Other disciplinary action.

8.3 Standard Operating Procedures

CSHP SOPs and site-specific S&H SOPs are developed and maintained to establish protocol for implementation of various safety programs and requirements. Employee compliance with these procedures is mandatory and is a condition of employment.

CSHP SOPs include written programs for:

- Assignment of safety responsibilities
- Safety meetings
- safety training
- Incident reporting and investigation
- Emergency action plans; hazard communication
- Medical surveillance
- PPE
- Respiratory protection
- SSHPs
- Hearing conservation
- Permit-required confined space
- loto
- Electrical safety
- Fall protection
- Ladder safety
- Scaffolding safety
- Heat and cold stress
- Medical services and first-aid
- Bloodborne pathogens
- Fire prevention and hot work
- Excavation and trenching safety
- Heavy equipment operation
- Drill rig safety
- Water safety
- Ordnance and explosives safety
- Aerial lift and scissor lift operation
- Exposure monitoring
- Recordkeeping
- Health and safety forms
- Contractor safety qualification
- Process safety management
- Vehicle safety
- Powered industrial truck operation
- Housekeeping
- unsafe condition reporting
- Equipment grounding conductor inspection
- Compressed gas cylinders
- Hand and power tool safety
- Back injury prevention

- Behavior-based safety
- Waste disposal
- Safety task analysis cards
- Emergency contact cards
- Field work safety incentive program
- Safety equipment purchase assistance
- SSHO qualification, assignment, and duties
- Tuberculosis prevention
- DOT drug and alcohol testing.

8.4 Site-Specific Procedures

8.4.1 Permits

The SSHO will obtain and comply with an installation dig permit and other work permit requirements.

9.0 EMERGENCY RESPONSE PLAN

Emergency/Contingency plans will be established to address possible site emergencies. Emergency plans must be established and include escape procedures and routes, critical plant operations, employee accounting following an emergency evacuation, rescue and medical duties, means of reporting emergencies, and persons to be contacted for information or clarification.

Onsite emergency planning shall be integrated with offsite emergency support. The SSHO will contact the local EMS and apprise them of the location, schedule, type of work, and inventory of flammable materials to be on site. The SSHO will offer the emergency service providers with an onsite orientation to the project and review the associated hazards. The SSHO will document the emergency service agreements (e.g., documentation may include written agreements, memoranda for record, telephone conversation logs).

For major emergency events (e.g., large fires, gas line or electrical line breaks) personnel will be evacuated to a designated refuge area and local fire, police, and/or emergency medical service personnel will be notified. The COR, PM, and SSHO will work cooperatively to resolve emergency events. All site personnel are required to immediately notify the SSHO and/or PM immediately in the event of any type of site emergency.

9.1 Site and Emergency Communications

Site and emergency communication procedures include:

- Cellular telephones will be used for site and emergency communications. If cellular telephones are not available, the closest land line telephone will be located before work being initiated
- The CAPE SSHO will maintain an Emergency Contact List (see Attachment 2). The SSHO is responsible for designating an emergency hospital and determining the route to the emergency hospital before the start of field operations

- The SSHO will ask CAPE site personnel to complete an Emergency Medical Notification Form to advise the SSHO of emergency contacts in case of medical emergency and conditions that could require emergency medical assistance (i.e., hypersensitivity to bee stings)
- The SSHO will establish emergency communications procedures before site work and will communicate this information to site personnel during site orientation briefings and safety meetings.

9.2 Emergency Supplies

Emergency supplies will be immediately available at the site and will include:

- First-aid kit
- Fire extinguisher
- Supply of potable water
- Eyewash supplies
- Spill kit.

9.3 Emergency Hospital and Route Information

The SSHO will select an emergency hospital and determine the route to the emergency hospital before site work. The designated emergency hospital, location and route map (see Figure 1) will remain on site during field operations.

9.4 Emergency Evacuation Procedures

For an emergency event that requires evacuation (e.g., large fire, gas line or electrical line break, chemical spill) personnel will be evacuated to the designated refuge area following the designated evacuation route (as specified on the daily safety meeting form). Local fire, police, and/or emergency medical service personnel shall be notified by the SSHO and/or Site Superintendent. Personnel shall remain at the refuge area until a head count has been performed by the SSHO and/or Site Superintendent.

9.5 Response to Fire Incident

The SSHO will consult with the local fire department before initiating site activities regarding response to fire incidents associated with site work. In the event of a fire, the following will be implemented:

- Large fire (beyond the immediate control of a small onsite fire extinguisher): The site alarm will be sounded, personnel will immediately evacuate and assemble at a predetermined upwind site location, the fire department will be called, and personnel will not reenter the fire area and will wait for fire department arrival
- Small fire (within the immediate control of a small onsite fire extinguisher): The site alarm will be sounded, trained personnel will use an onsite fire extinguisher to put out the fire.

9.6 Response to Chemical Spill Incident

A spill kit will be available on site (located in designated area by CAPE project office) with supplies for spill containment and control and includes: sandbags; absorbent pads; solid absorbent; 55-gallon drums; fire extinguisher; PPE; eyewash supplies; and a first-aid kit).

In the event of a small chemical spill incident, the PM and SSHO will be immediately notified. The SSHO will obtain information regarding the spill and will respond immediately to the spill location. The SSHO shall determine the hazards and hazardous or toxic agents involved. As needed, the SSHO will contact the SHM (industrial hygienist) to assist with the hazard assessment, evaluation and control measures needed to perform the response. Atmospheric hazard monitoring, PPE, and work methods shall be implemented as specified by the SSHO in order to perform a response.

If containment can be done safely without exposure to personnel, the following will be implemented:

- Liquid chemical spills will be contained through prompt application of absorbents (e.g., absorbent pads or solid absorbent)
- Solid chemical spills are contained by covering with sheet plastic (or by an equivalent method). Spilled material is collected in bags, drums, or other suitable containers and disposed of as required.

In the event of a large uncontrolled chemical spill incident, the PM, SSHO, and COR will be immediately notified. The SSHO will obtain information regarding the spill and will respond immediately to the spill location. The SSHO shall determine the hazards and hazardous or toxic agents involved. As needed, the SSHO will contact the SHM (industrial hygienist) to assist with the hazard assessment, evaluation and control measures needed to perform the response. Atmospheric hazard monitoring, PPE, and work methods shall be implemented as specified by the SSHO in order to perform a response.

9.7 Response to Medical Emergency Incident

In the event of a medical emergency, the following procedures will be implemented:

- The exposed or injured person will be removed from immediate danger, first aid and/or CPR will be administered by trained site personnel
- Emergency medical assistance will be called and will be informed of the following: name and location of person reporting; location of accident or incident; specific directions to the emergency location, as needed; phone number from which the person is calling; number persons needing help; what is currently being done for the victim (for life-threatening injuries, request instructions from emergency services dispatcher); name and affiliation of injured party; description of injuries; details of any chemical involved; summary of the accident, including

suspected causes and time of occurrence; and temporary control measures taken to minimize further risk

- Nonessential personnel will be evacuated from the work area until the SSHO determines that it is safe for work to resume
- A medical emergency involving chemical exposure will require communication between the SSHO and emergency hospital personnel regarding chemicals involved
- The SSHO will designate an individual to accompany or follow the victim to the emergency hospital to assist with any needs that arise and to report back regarding the victims status.

10.0 TRAINING

Copies of S&H training certificates will be reviewed and maintained by the SSHO. Personnel will not be allowed to start fieldwork until such documentation has been presented to the SSHO.

10.1 Preconstruction Safety Conference

A preconstruction safety conference will be held before the start of site work. The COR and representatives will meet with CAPE to review and discuss requirements associated with planning and administration of the project safety program.

10.2 HAZWOPER Training

Personnel involved in hazardous waste activities at the site must have completed hazardous waste operations and emergency response (HAZWOPER) training as required by the OSHA HAZWOPER standard. Certificates of HAZWOPER training will be maintained by the SSHO at the site. Copies of current training certification statements will be submitted before initial entry onto the work site. Required HAZWOPER training includes the following:

- Worker Training: 40 hours of initial training and 3 days of supervised field experience
- Manager and Supervisor Training: 8 hours of additional specialized manager/supervisor training
- Refresher Training: 8 hours of refresher training annually.

10.3 Site Orientation Briefing

New workers must receive a site orientation briefing and review the SSHP before start of work. Personnel will sign a form documenting that they have reviewed the plan, understand the SSHP requirements, and agree to follow the plan.

Personnel will provide training and medical fitness for duty documentation to the SSHO if required for site work activities.

Before start of work, the SSHO will provide a site orientation briefing to workers related to project operations and SSHP requirements. The briefing will include review of (as applicable): provisions of the SSHP, facility background and scope of work, key personnel and S&H responsibilities, site hazards anticipated, exposure monitoring program, site control procedures, PPE requirements, procedures for reporting unsafe conditions or unsafe work practices, procedures for reporting an injury/illness, emergency procedures including warning signals and evacuation procedures, location/route to the emergency hospital, training requirements, medical surveillance requirements, and recordkeeping procedures.

10.4 Safety Meetings

Daily safety meetings will be conducted at the beginning of each work shift by the Site Superintendent or SSHO to review, with the work crew, past activities; to plan for new or changed operations; to review pertinent aspects of appropriate AHAs (by trade); to establish safe working procedures for anticipated hazards; and to provide pertinent safety and health training and motivation. Attendance by all project personnel is mandatory. Meetings will be documented, including the date, subjects discussed, name of individual who conducted the meeting and attendees. Those in attendance will be required to sign the Tailgate Safety Meeting, Toolbox Safety Meeting Record, or equivalent form. Documentation will be maintained and copies furnished to the designated authority on request.

10.5 Monthly Supervisor Safety Meetings

Supervisor safety meetings will be held at least once a month for all supervisors on the project location. The SHM and/or SSHO will conduct the safety meeting and will discuss safety-related issues directed toward supervisor responsibilities. Meetings will be documented and attending personnel will sign a Safety Meeting Attendance Roster. Safety meeting forms will be maintained by the SSHO and copies will be furnished to the COR upon request.

10.6 First-Aid/CPR Training

Supervisory site personnel will have completed first-aid and CPR training within the past year. At least two persons trained in first-aid/CPR will be on site during project activities.

10.7 30-Hour OSHA Construction Safety and Health Training

Personnel who are assigned as a SSHO shall have attended a 30-Hour OSHA Construction S&H Training class. An equivalent course applicable to the work to be performed (i.e., OSHA 500 Trainer Course in Occupational S&H for the Construction Industry) is considered acceptable. Class topics typically reviewed during the 30-hour OSHA Construction S&H class include:

- Introduction to OSHA
- Fall Protection, Subpart M
- Electrical, Subpart K

- Struck By
- Caught In/Between
- Personal Protective and Lifesaving Equipment, Subpart E
- Health Hazards in Construction
- Stairways and Ladders, Subpart X
- Fire Protection and Prevention, Subpart F
- Materials, Handling, Storage, Use and Disposal, Subpart H
- Tools – Hand and Power, Subpart I
- Welding and Cutting, Subpart J
- Scaffolds, Subpart L
- Cranes, Derricks, Hoists, Elevators, and Conveyors, Subpart N
- Motor Vehicles/Mechanized Equipment/Marine Operations, Subpart O
- Rollover Protective Structures & Overhead Protection, Subpart W
- Signs, Signals and Barricades, Subpart G
- Excavations, Subpart P
- Concrete and Masonry Construction, Subpart Q
- Confined Space Entry
- Powered Industrial Vehicles
- Ergonomics
- Other construction industry hazards or policies.

10.8 Asbestos Training

Asbestos training is required for personnel who handle ACM containing more than 1 percent asbestos and who may potentially be exposed to asbestos above the OSHA PEL or EL. Training is required for workers that perform Class I-IV asbestos work as per the applicable OSHA regulation for asbestos (29 CFR 1926.1101). Asbestos training must be provided at no cost to the worker and is required at initial assignment and at least annually thereafter. The training program must be conducted in a manner that the worker is able to understand.

Asbestos training requirements for Class I and II asbestos work, as defined in the OSHA asbestos in construction standard, are: asbestos worker training meeting EPA Model Accreditation Plan requirements (4 days/32 hours); asbestos supervisor training meeting EPA Model Accreditation Plan requirements (5 days/40 hours); and asbestos refresher training meeting EPA Model Accreditation Plan requirements (1 day/8 hours annually).

Site personnel who will be completing asbestos-related construction work at the site are required to be EPA and/or state certified, as applicable. Such personnel must have completed asbestos EPA AHERA worker, contractor/supervisor, building inspector, management planner, and project designer training, as applicable, and/or other training as required by federal, state, and local regulations.

The Asbestos CP will conduct a safety conference before the commencement of asbestos abatement work. The safety conference includes contractor representatives, the employer, workers, and worker representatives. The safety conference includes a discussion of planned asbestos-related work activities and hazard control measures to be implemented.

10.9 Lead Training

Personnel who may potentially be exposed to inorganic lead above the OSHA action level or PEL are subject to the requirements of the OSHA regulation for lead (29 CFR 1926.62). Lead hazard information must be communicated to workers including, but not limited to, warning signs and labels, MSDSs, and employee information and training. Workers are required to attend a training program if they are exposed to lead at or above the action level on any day and/or exposed to lead compounds that may cause skin or eye irritation. Initial training must be provided before time of job assignment involving potential lead exposure. Training must be provided on at least an annual basis for each worker who is subject to lead exposure at or above the action level on any day.

The content of the inorganic lead employee information and training includes review of:

- Content of the OSHA standard and its appendices
- Specific nature of operations that could result in lead exposure at or above the action level
- Purpose, proper selection, fitting, use, and limitations of respirators
- Purpose and description of medical surveillance and medical removal protection programs
- Engineering controls and safe work practices
- Contents of any compliance plan in effect
- Instructions regarding chelating agent use
- Employee right of access to records.

The Lead CP will conduct a safety conference before the commencement of lead-related work. The safety conference includes contractor representatives, the employer, workers, and worker representatives. The safety conference includes a discussion of planned lead-related work activities and hazard control measures to be implemented.

11.0 MEDICAL SURVEILLANCE

Medical surveillance requirements exist for site personnel who will be entering site E Zs. Medical surveillance requirements include baseline, annual, reassignment, and termination (exit) medical examinations. Required medical qualification documentation consists of a written physician opinion regarding any detected medical conditions that may limit hazardous waste remediation activities and an opinion regarding protective clothing and respirator use. Copies of medical surveillance examination reports for site personnel will be reviewed by the SHM and SSHO and maintained by the SSHO and will be made available to the COR as required.

11.1 Medical Examinations and Reports

CAPE medical examinations for field personnel are completed before job assignment and annually thereafter. CAPE uses WorkCare for medical service outsourcing. WorkCare physicians, that are American Board of Preventive Medicine, Board-Certified (or Board-Eligible) provide occupational physician support services to CAPE.

The CAPE standard medical examination protocol consists of the following: medical and occupational history, comprehensive physical examination, vision test, audiometric testing, pulmonary function tests (FVC and FEV 1.0), complete blood count with differential, urinalysis with microscopic examination, blood chemistry panel, chest X-ray (every 3 years for persons 40 years and younger, yearly for persons over 40 years old), and electrocardiogram (yearly for persons over 40 years old).

Medical examination reports for personnel are presented in the form of work status medical reports. These reports indicate any detected medical conditions that would increase an individual's risk of material health impairment from occupational exposure or if the individual has limitations in the use of PPE such as protective clothing or respirator use. Copies of medical examination reports for site personnel will be maintained by the SSHO and will be provided to the COR, as required.

11.2 Drug and Alcohol Testing Program

CAPE has a policy for a drug-free workplace. CAPE requires all prospective employees to complete pre-employment drug testing. Drug testing procedures are coordinated through the CAPE Human Resources department for confidentiality of records.

Post-accident drug and/or alcohol testing will be conducted as soon as possible following: a job-related recordable injury; property damage accident involving $2,000 or more; or other incident where in the judgment of the PM, SSHO, and CAPE management, there is reasonable suspicion that substance abuse may have been a contributing factor. Post-accident drug and/or alcohol testing must be conducted immediately following a job-related injury or accident. If there are extenuating circumstances preventing an employee from going for drug and/or alcohol testing immediately, the testing must be conducted within 24 hours of the incident. Workers are not allowed back to work until documentation has been provided to the SSHO in the form of a negative drug and/or alcohol test.

12.0 RECORDKEEPING

S&H documentation records associated with SSHP implementation will be maintained by the SSHO.

12.1 Health and Safety Documentation

S&H documentation records, as applicable, include the following: MSDSs, S&H training documentation, medical surveillance examination documentation, respirator fit testing forms, SSHP review and safety meeting records, safety inspection reports, equipment inspection forms, confined space entry permits, hot work permits, exposure monitoring records and employee notifications, incident reporting and investigation records, and other S&H documents.

12.2 Site Safety and Health Plan Forms

Completed SSHP forms are maintained on site by the SSHO for the duration of the project. SSHP forms (Attachment 1) that may be used during the project are indicated below:

- APP Review
- Activity Hazard Analysis Preparatory Phase Training Log
- Airborne Dust Monitoring Log
- Air Monitoring Log
- Calibration Log: Direct-Reading Monitoring Instrument
- Certificate of Worker/Visitor Acknowledgment
- Emergency Medical Notification Form
- Equipment Decontamination Release Authorization
- Hazardous Substance Inventory List
- Heavy Equipment Inspection Report
- Incident Report by Supervisor
- Incident Statement by Employee
- Incident Statement by Witness
- Injury and Illness Report
- Property Damage, Loss, and General Liability Report
- Safety and Occupational Health Deficiency Tracking List
- Safety Inspection Report
- Site Control Log
- Site Safety and Health Plan Change Approval Form
- Site Safety and Health Plan Distribution to Subcontractor
- Site Safety and Health Plan Review
- Tailgate Safety Meeting Record
- Training Attendance Roster
- Vehicle Accident Report.
- Inspection Checklist: Construction Safety (REMCON)
- USACE ENG 3394 Accident Investigation Report.

FIGURE 1

EMERGENCY HOSPITAL ROUTE MAP

FIGURE 1

EMERGENCY HOSPITAL ROUTE MAP

Emergency Hospital:
Saint Clare's Hospital
25 Pocono Road, Denville, NJ 07834
(973) 625-6000

Emergency Hospital Route:
1) From 1 East Main Street, Rockaway, NJ;
2) Go toward Franklin Avenue, Mill Lane (go 0.9 miles);
3) Continue on US-46 (go 1.2 miles);
4) Bear Right toward RT-53 North (go 0.1 miles);
5) Turn Right on E. Main Street (RT-53 North) (go 0.1 miles);
6) Turn Right on Diamond Springs Road (go 0.3 miles);
7) Turn Right on Pocono Road (go 0.5 miles);
8) Arrive at Saint Clare's Hospital.

FIGURE 2

SITE LOCATION AND WORK AREA MAP

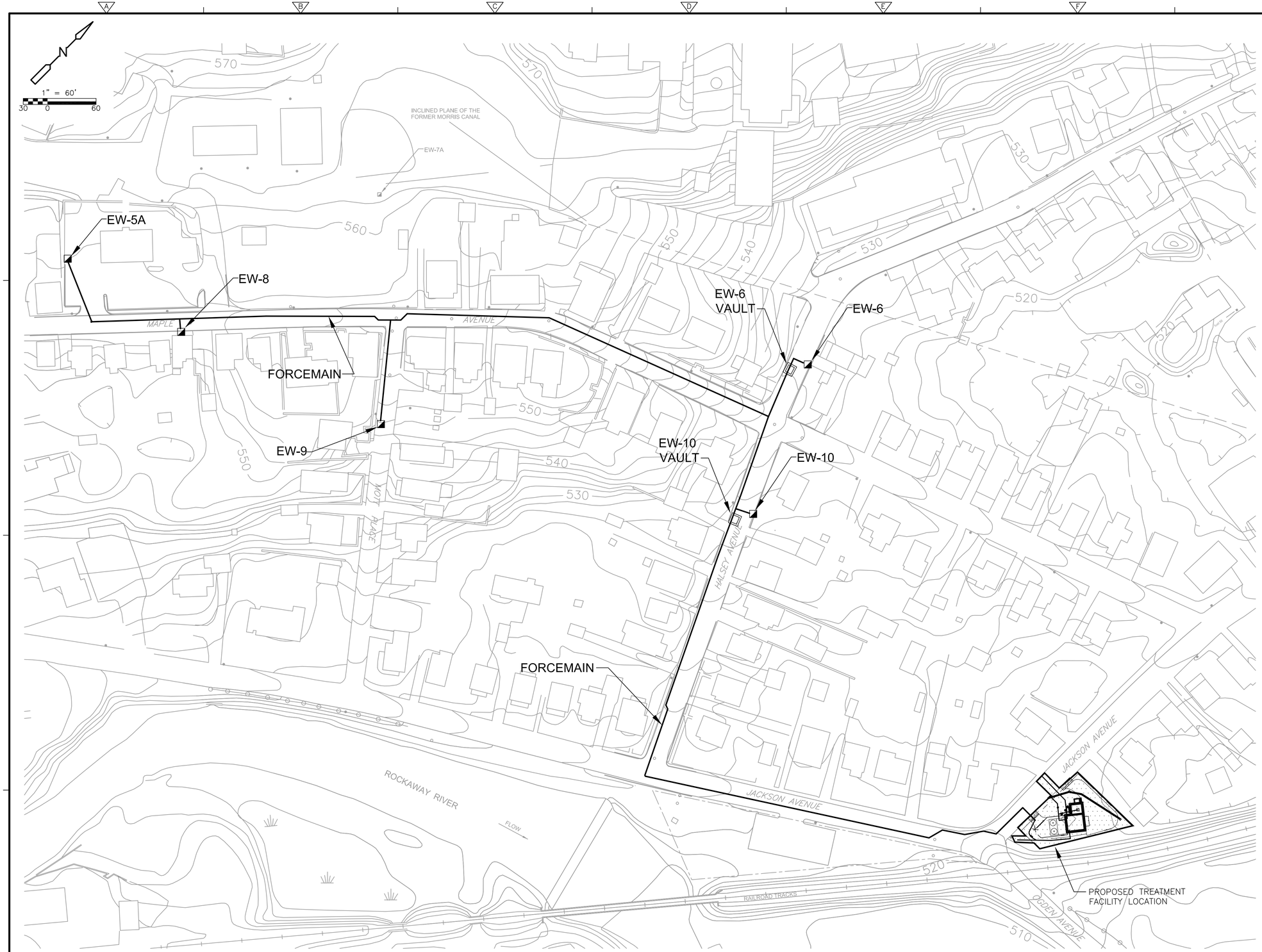

LEGEND

- NEW FORCE MAIN LINE
- NEW GROUNDWATER EXTRACTION WELL
- APPROXIMATE LIMITS OF DESIGN PACKAGE

NOTES

1. DRAWINGS ARE BASED ON SURVEY PREPARED BY STEWART SURVEYING & ENGINEERING LLC DATED AUGUST 2004 AND JULY 2005 AND LAN ASSOCIATES AUGUST 2007.
2. HORIZONTAL COORDINATE SYSTEM IS NEW JERSEY STATE PLANE NAD27. VERTICAL COORDINATE SYSTEM IS NGVD 1929.

100% SUBMITTAL

KERSHU TAN
PROFESSIONAL ENGINEER
NJ LICENSE NO.
24GE04395200

REV. NO.	DATE	DRWN	CHKD	REMARKS

DESIGNED BY: E. GALLERIE
DRAWN BY: E. GALLERIE
SHEET CHK'D BY: M. POPPER
CROSS CHK'D BY: K. TAN
APPROVED BY: K. TAN
DATE: NOVEMBER 2010

PREPARED BY:
CDM Federal Programs Corporation

FOR:
CAPE
CAPE Environmental Management, Inc.

US Army Corps of Engineers Kansas City District
GROUNDWATER TREATMENT FACILITY PACKAGE
ROCKAWAY BOROUGH SUPERFUND SITE
EAST MAIN/WALL STREET PLUME - OU2
ROCKAWAY BOROUGH, NEW JERSEY

AREA MAP

PROJECT #61090-6170-004
FILE NAME: GSTPL002

SHEET NO.
G-2

TABLE 1

CHEMICAL HAZARD INFORMATION

TABLE 1

CHEMICAL HAZARD INFORMATION

Compound	Exposure Limits	Route of Exposure/Primary Health Effects
Trichloroethene (TCE)	50 ppm (TLV-TWA); 100 ppm (TLV-STEL)	Inhalation, ingestion and dermal routes of exposure. Eye, skin and respiratory irritation; Central nervous system depression; Possible liver, kidney, cardiovascular and gastrointestinal injury; Dermatitis
Asbestos, as fibers	0.1 f/cc (PEL); 1.0 f/cc (EL)	Inhalation and ingestion routes of exposure. Asbestosis; mesothelioma; pleural plaques; lung cancer; gastrointestinal cancer
Lead	30 $\mu g/m^3$ (action level) 50 $\mu g/m^3$ (PEL)	Inhalation, ingestion and dermal routes of exposure. Gastrointestinal disturbances; anemia; neuromuscular dysfunction; encephalopathy; nephropathy

LEGEND:

f/cc: Fibers per cubic centimeter of air
$\mu g/m^3$ Micrograms per cubic meter
mg/m^3: Milligrams per cubic meter
ppm: Parts per million
PEL: Occupational Safety and Health Administration (OSHA) 8-hour Time-Weighted Average (TWA) Permissible Exposure Limit
EL: OSHA 30-minute TWA Excursion Limit
TWA: Time-weighted average
TLV-TWA: American Conference of Governmental Industrial Hygienists (ACGIH) 8-hour TWA Threshold Limit Value (TLV).
TLV-STEL: ACGIH 15-minute TWA Short Term Exposure Limit.

TABLE 2

EXPOSURE MONITORING INFORMATION

TABLE 2

EXPOSURE MONITORING INFORMATION

Exposure Element	Activity / Method of Monitoring	Action Levels / Action
Volatile Organic Compounds (VOCs)	Tasks where VOCs may be present (excavation, sampling). Use RAE Systems MiniRAE 2000, Thermo Environmental 580B OVM, or equivalent. Initial and periodic monitoring of work areas and worker breathing zone.	Greater than 25 ppm to less than, or equal to, 50 ppm (>1 minute sustained reading): Implement engineering controls. Use Level C protection. Contact the SSHO to evaluate Greater than 50 ppm: Stop work. Contact the SSHO to evaluate. Also evaluate work methods, engineering controls and work practices.
Asbestos area monitoring	Area monitoring at perimeter of regulated area during abatement. Use Air sampling pumps; 25-mm, 0.8-µm pore size, MCE filter; Lab analysis by OSHA Reference Method. During abatement work where airborne asbestos may be present.	Greater than 0.01 f/cc or background, whichever is greater: Modify the abatement method and/or technique to reduce airborne fiber concentrations. Use engineering controls. Contact the Asbestos CP and SSHO to evaluate. SSHO to advise the COR.
Asbestos worker exposure monitoring	Worker exposure monitoring during asbestos-related work. Use Air sampling pumps; 25-mm, 0.8-µm pore size, MCE filter; Lab analysis by OSHA Reference Method. Representative worker and work area monitoring during asbestos-related work.	Greater than 0.1 f/cc to less than 1 f/cc: Use APR. Use work area engineering controls. Use wet methods. 1 f/cc or greater: Increase wetting. Contact the CP and SSHO to observe and evaluate removal methods and engineering and work practice controls.

Exposure Element	Activity / Method of Monitoring	Action Levels / Action
Lead worker exposure monitoring	Worker exposure monitoring during lead-related work. Use Personal air sampling pump; 37-mm diameter, 0.8-µm pore size, MCE filter. Lab analysis by NIOSH 7082. Representative worker and work area monitoring during lead-related work.	Greater than 30 µg/m^3 (action level) to less than 50 µg/m^3 (PEL): Set up Lead "Regulated Area." Use work practice controls (wet methods). 50 µg/m^3 or greater: Use APR. Contact the CP and SSHO to observe and evaluate removal methods and engineering and work practice controls.
Lead area monitoring	Area monitoring at perimeter of regulated area during abatement activities. Use Personal air sampling pump; 37-mm diameter, 0.8-µm pore size, MCE filter. Lab analysis by NIOSH 7082. During abatement work where lead may be present.	Greater than 50 µg/m^3 or background, whichever is greater: Modify the abatement method and/or technique to reduce airborne lead concentrations. Use engineering controls. Contact the Lead CP and SSHO to evaluate. SSHO to advise the COR.
Heat Stress (radial pulse for heart rate)	Tasks where elevated ambient temperatures (greater than 70ºF), moderate to heavy workloads, and impermeable protective clothing is being used. Conduct initial baseline and periodic monitoring at the end and beginning of each work period.	Baseline: HR greater than 110 bpm: Reduce next work period by one-third. Next: HR greater than 110 bpm: Reduce next work period by one-third. HR slow recovery to less than 110 bpm: Alert SSHO to evaluate.

LEGEND:

f/cc:	Fibers per cubic centimeter of air
µg/m^3	Micrograms per cubic meter
µm:	Micrometer
mm:	Millimeter
mg/m^3:	Milligrams per cubic meter
ppm:	Part Per Million
PEL:	Occupational Safety and Health Administration (OSHA) 8-hour Time-Weighted Average (TWA) Permissible Exposure Limit
NIOSH:	National Institute for Occupational Safety and Health
ºF:	Degrees Fahrenheit
HR:	Heart rate measured by checking radial pulse rate
bpm:	Beats per minute
APR:	Air-Purifying Respirator
MCE:	Mixed cellulose ester

ATTACHMENT 1

SSHP FORMS

ACCIDENT PREVENTION PLAN REVIEW

Project Name:	
Project Location:	
Date:	
Conducted By:	

I have reviewed the CAPE Accident Prevention Plan for the above indicated site and understand the hazards and control measures required on this project.

I agree to follow the procedures outlined in this plan and to inform the CAPE Project Manager, Superintendent, and/or Site Safety and Health Officer should any unsafe condition be noted.

I understand that failure to follow safety regulations can be reason for removal from this project.

Date	Name	Signature	Company

ACTIVITY HAZARD ANALYSIS PREPARATORY PHASE TRAINING LOG

Activity Hazard Analysis Phase Number(s): _____

Project Name:	
Project Location:	
Date:	
Conducted By:	

The following individuals have reviewed and have agreed to follow the Activity Hazard Analysis prepared by CAPE for the above indicated site and understand the hazards and control measures required on this phase of the project.

I agree to follow the procedures outlined in this plan and to inform the CAPE Project Manager, Site Superintendent, and/or Site Safety and Health Officer should any unsafe condition be noted.

I understand that failure to follow safety regulations can be reason for removal from this project.

Name	Signature	Company

AIRBORNE DUST MONITORING LOG

Project Name:	
Project Location:	
Date:	
Conducted By:	
Instrument:	
Page Number:	

Time	Location	ET (min.)	Conc (mg/m^3)	TWA (mg/m^3)	Max (mg/m^3)	STEL (mg/m^3)

LEGEND:
ET Elapsed Time
Conc Concentration
TWA Time-Weighted Average
Max Maximum
STEL Short-Term Exposure Limit
Min. Minutes
mg/m^3: Milligrams per cubic meter

AIR MONITORING LOG

Project Name:	
Project Location:	
Date:	
Conducted By:	
Page Number:	

Time	**Location**	**_____ (____)**	**_____ (____)**	**_____ (____)**	**_____ (____)**	**_____ (____)**

LEGEND:

VOC: Volatile organic compound
PID: Photoionization detector
FID: Flame ionization detector
LEL: Lower explosive limit
O_2: Oxygen meter
mg/m^3: Milligrams per cubic meter
ppm: Parts per million

CALIBRATION LOG: DIRECT-READING MONITORING INSTRUMENT

Project Name:	
Project Location:	
Conducted By:	
Instrument:	

Date: **Name:**	**Calibration Gas:** **Concentration:**
Initial Reading: **Adjusted Reading:**	**Comments:**

Date: **Name:**	**Calibration Gas:** **Concentration:**
Initial Reading: **Adjusted Reading:**	**Comments:**

Date: **Name:**	**Calibration Gas:** **Concentration:**
Initial Reading: **Adjusted Reading:**	**Comments:**

Date: **Name:**	**Calibration Gas:** **Concentration:**
Initial Reading: **Adjusted Reading:**	**Comments:**

Date: **Name:**	**Calibration Gas:** **Concentration:**
Initial Reading: **Adjusted Reading:**	**Comments:**

CERTIFICATE OF WORKER AND VISITOR ACKNOWLEDGMENT

Name:	
Organization:	
Project Name:	
Project Location:	

The contract for the above indicated project requires the following: That you be provided with formal and site-specific training on the applicable aspects of the Site Safety and Health Plan (SSHP); that you be supplied with proper personal protective equipment (PPE) including respirators and that you be trained in its use; that you receive a medical examination to evaluate your physical capacity to perform your assigned work tasks, under the environmental conditions expected, while wearing the required PPE. These are to be done at no cost to you. By signing this certification, you are acknowledging that your employer has met these obligations to you.

I HAVE REVIEWED, UNDERSTAND AND AGREE TO FOLLOW THE SSHP FOR THIS SITE.

_____

Signature / Date

FORMAL TRAINING: I have completed the following formal hazardous waste operations (HazWOPER) training courses that meet OSHA requirements:

____ 40-Hour HazWOPER Worker (date completed): _____
____ 8-Hour HazWOPER Supervisor (date completed): _____
____ 8-Hour HazWOPER Refresher (date completed): _____

SITE-SPECIFIC TRAINING: I have been provided and have completed the site-specific training required by this Contract. Name of the Site Safety and Health Officer (SSHO) who conducted the training: _____

RESPIRATORY PROTECTION AND RESPIRATOR FIT-TEST TRAINING: I have been trained in accordance with the criteria in the [Contractors] [Employers] respiratory protection program. I have been trained in proper work procedures, use and limitations of the respirator(s) that I will wear. I have been trained in and will abide by the facial hair policy. I have been trained in the proper selection, fit, use, care, cleaning, maintenance, and storage of respirator(s) that I will wear. I have been fit-tested in accordance with criteria in the [Contractors] ([Employers] respirator program and have received a satisfactory fit. [I have been assigned my individual respirator.] I have been taught how to properly perform a positive and negative pressure user seal check upon donning a negative pressure respirator each time: Initial: _____

MEDICAL EXAMINATION: I have had a medical examination within the last twelve months that was paid for by my employer. The examination included a health history, pulmonary function test, and may have included an evaluation of a chest X-ray. A physician made determinations regarding my physical capacity to perform work tasks on the project while wearing PPE including a respirator. I was personally provided a copy and informed of the results of that examination. My employers industrial hygienist evaluated the medical certification provided by the physician and checked the following information.

Date of Medical Exam: _____

Physician Determined: _____ No limitations to performing the required work tasks
_____ Physical limitations to performing required work tasks identified

[Employee] [Visitor] Printed Name / Signature / Date: _____

Contractor SSHO Printed Name / Signature / Date: _____

EMERGENCY MEDICAL NOTIFICATION FORM

Employee Name:	
Mailing Address:	
Home Telephone:	

EMERGENCY NOTIFICATION INFORMATION

IN CASE OF EMERGENCY NOTIFY:
Name / Relationship / Telephone:
Name / Relationship / Telephone:
ALLERGIES
List any health-threatening allergies (i.e., medications, food, bee stings):
MEDICATIONS
List current medications that may affect the ability to safely operate equipment and machinery:
OTHER INFORMATION
List any other information that should be known in case of an emergency:

Name (print):	
Signature:	
Date:	

EQUIPMENT DECONTAMINATION RELEASE AUTHORIZATION

Date / Day:	
Project Name:	
Project Location:	
Equipment Type:	
Mfr / Model:	

Item	Inspection Description	Clean	Not Clean	N/A
1	Tires / Rims, outside			
2	Tires / Rims, inside			
3	Buckets / Blades			
4	Rippers / Other			
5	Cross-members			
6	Undercarriage			
7	Tracks			
8	Drive carriage			
9	Drip pans			
10	Brush guards			
11	Belly pans			
12	Scraper can interior			
13	Truck beds			
14	Frames			
15	Engine compartment			
16	Cab			

Equipment Use:

Decontamination Description:

I certify that I have inspected the equipment indicated above and have observed that visible material has been removed from the equipment.

Inspected By:	
Signature:	
Date:	

HAZARDOUS SUBSTANCE INVENTORY LIST

Project Name:	
Project Location:	

MSDS on File	Product Name	Manufacturer	Location and Container Type

HEAVY EQUIPMENT INSPECTION REPORT

Date / Day:	
Project Name:	
Project Location:	
Equipment Type:	
Mfr / Model:	

Inspection Description	Checked	Observations (readings, levels, condition, damage, repairs needed)
General appearance		
Hour meter reading		
Engine operation / check belts		
Engine oil / water level		
Transmission oil level		
Hydraulic / misc. oil level		
Brake operation / fluid level		
Grease		
Batteries		
Fuel level (gas / diesel)		
Hoses & fittings (air, hydraulic…)		
Operation / controls		
Tires / tracks		
Cab (mirrors, seatbelt, glass, horn, turn signals, lights, wipers)		
Back-up lights and alarm		
Fire extinguisher condition		
Coupling devices and connectors		
Exhaust system		
Blade / boom / bucket		
Frame, ladders and walkway		
Steering		

Defects and Repairs Needed / Comments:

Inspected By: Signature:

POST AT JOB SITE

INCIDENT REPORTING AND INVESTIGATION PROCEDURES

(Injury/Property Damage/Liability Exposure/Spills/Fires/Serious Near Miss Incidents)

Notify the Site Supervisor or Site Safety and Health Officer (SSHO) immediately of injuries, property damage, liability exposure, spills, fires, and serious near miss incidents. The Site Supervisor or his/her representative shall:

- Take care of injured personnel immediately and secure the area
- Secure remaining dangerous conditions to prevent accidents and additional damage
- Secure the incident scene to preserve information
- Identify employees involved in the incident and witnesses and obtain initial information
- Notify the Project Manager (PM), Corporate Health and Safety Manager (CHSM), and Corporate Risk Manager (RM) about the incident and receive instructions. Drug/alcohol testing may be needed. **Notify as soon as possible - No later than 2 hours of the incident**
- Initiate fact finding. Investigate the site, interview witnesses, and document circumstances and facts. Take photos of the incident area and equipment involved. Complete preliminary documentation forms. Depending upon incident severity and complexity, fact finding may involve other investigators as determined by the CHSM
- Complete required CAPE forms: Incident Statement by Employee, Incident Statement by Witness, Incident Report by Supervisor, Injury and Illness Report, Vehicle Accident Report, and/or Property Damage, Loss and General Liability Report. Submit all forms (if a form is not applicable write N/A on the form.)
- **Submit completed forms to the CHSM, RM and PM within 24 hours of an incident and immediately forward additional information as it becomes available**.

NOTE: Accidents resulting in a fatality or multiple hospitalizations require reporting to the nearest OSHA office within 8 hours (1-800-321-OSHA). This report shall be made by the CHSM. A written report shall follow that provides OSHA with all details of the accident required by 29 CFR 1904.8. Any equipment, material, or related evidence that might help in an investigation must not be moved except to prevent further accidents.

INCIDENT REPORTING CONTACT INFORMATION:

PM: _____ - Office _____ – Fax _____ – Cell _____

CHSM: Glen Mayekawa – Office (714) 599-9071 – Fax (714) 599-9087 – Cell (714) 920-7483

RM: Chris Caviness – Office (770) 908-7200 – Fax (770) 908-7219

FAILURE OF A CAPE EMPLOYEE TO PROMPTLY REPORT A SAFETY INCIDENT OR FAILURE TO PRESERVE AN ACCIDENT SCENE UNTIL AN INVESTIGATION IS COMPLETED, IS GROUNDS FOR DISCIPLINARY ACTION.

INCIDENT REPORT BY SUPERVISOR

Date / Time of Incident:
Project Name / Project No.:
Client Name / Location:
Specific Location of Incident:
Employees Involved in Incident (if applicable):
Detailed Description of Incident:
Primary Cause of Incident:
Contributing Cause(s) of Incident:
Recommendation for Preventing Such Incidents in the Future:
Supervisor Name (print):
Signature:
Date:

INCIDENT STATEMENT BY EMPLOYEE

Employee Name:
Date / Time of Incident:
Project Name / Project No.:
Client Name / Location:
Specific Location of Incident:
Describe What You Were Doing Just Before the Incident:
Detailed Description of How the Incident Occurred:
Names of Witnesses:
Other Relevant Information:
How Can the Likelihood of this Happening Again Be Reduced:
Employee Name (print):
Signature:
Date:

INCIDENT STATEMENT BY WITNESS

Witness Name / Address / Telephone:
Employer / Telephone:
Date / Time of Incident:
Project Name / Project No.:
Client / Location:
Specific Location of Incident:
DETAILED DESCRIPTION OF INCIDENT BASED ON PERSONAL OBSERVATION
Describe where you were and what you were doing just before the incident:
Describe any injuries:
Describe any property damaged:
Describe what was the apparent nature of the injury and/or damage:
Describe what personnel and/or equipment were involved:
Describe what caused the injury and/or damage:
Describe the sequence of events:
List any observed unsafe acts or conditions:
Names of other witnesses:
Other relevant information:
Witness Name (print):
Signature:
Date:

INJURY AND ILLNESS REPORT

Injured Employee Name:	Date / Time of Injury:
Social Security Number:	Date of Birth / Age:
Sex: M ☐ F ☐ # of Dependents:	Date of Hire:
Job Title:	Pay Rate:
Home Address:	Home Telephone:
CAPE Home Office:	Injury on CAPE Premises: Yes☐ No☐
Client / Location:	Injury on Client Premises: Yes☐ No☐
Specific Accident Location:	
Nature of Injury:	
Exact Body Part Injured:	
Medical Attention: None ☐ First Aid ☐ Paramedics ☐ Doctor ☐ Hospital ER ☐ Overnight ☐	
Medical Attention Description:	
Hospital / Doctor Name / Telephone:	
Hospital / Doctor Address:	
Date / Time Injury Reported / By Whom:	
Time employee began work:	Avg. # of hours worked per week:
Did employee leave work: Yes ☐ No ☐ When:	
Has employee returned to work: Yes ☐ No ☐ When:	
Note: Employee must present a return to work release from examining physician before return to work	
Did employee have a work activity restriction: Yes ☐ No ☐ Describe:	Dates restricted:
Did employee miss a regularly scheduled work shift: Yes☐ No☐	Dates missed:
Injury Incident Description:	
What actions have been taken to prevent recurrence:	
What was the employee doing just before the incident occurred?	
Witness Name:	Telephone:
Address:	Statement Attached: Yes ☐ No ☐
INVESTIGATION AND REVIEW (Report to CHSM within 2 hours of injury)	
Completed by Name (print) / Signature / Date:	
Title / Phone:	
Site Supervisor Name (print) / Signature / Date:	
Project Manager Name (print) / Signature / Date:	
CHSM Name (print) / Signature / Date:	
Attached to this report: ☐ Incident Statement by Employee ☐ Incident Report by Supervisor ☐ Incident Statement by Witness ☐ Photographs ☐ Maps/Sketches ☐ Other _____	
(Section to be completed by a CAPE Safety Team Representative)	

PROPERTY DAMAGE, LOSS AND GENERAL LIABILITY REPORT

Project Name / Project No.:
Project Location:
Project Manager / Supervisor:
Date / Time of Damage or Loss:
Description / Identification of damaged or lost property:
Location of damaged or lost property (before loss):
Detailed description of how the damage or loss occurred:
Cause and corrective action recommended to prevent recurrence:
OWNER
Owner of damaged or lost property Name / Telephone:
Address:
Employer Name and Address:
WITNESS
Witness Name / Telephone:
Witness Address:
Employer Name and Address:
WITNESS
Witness Name / Telephone:
Witness Address:
Employer Name and Address:
REPAIR COST
Repair or Replacement Cost:
Attachments: [ ] Photographs [ ] Police Report [ ] Incident Statement by Witness [ ] Incident Report by Supervisor [ ] Incident Statement by Employee [ ] Injury Report
Supervisor Name (print):
Signature:
Date:

SAFETY AND OCCUPATIONAL HEALTH DEFICIENCY TRACKING LIST

List and monitor the status of safety and health deficiencies in chronological order. Post this list on the project safety bulletin board (or post a notice as to its location) and update daily.

Date Deficiency Identified	Description of Deficiency	Name of Person Responsible to Correct Deficiency	Projected Date Deficiency to be Resolved	Date Deficiency Was Actually Resolved

SAFETY INSPECTION REPORT

Date / Day:	
Project Name:	
Project Location:	
Work Description:	
Comments:	

OBSERVATIONS

Safety Conditions Requiring Corrective Action	Corrective Action, Assignment, and Completion Date

Project Manager:	
Safety Inspector:	
Distribution:	

SAFETY MEETING ATTENDANCE ROSTER

Project Name:	
Project Location:	
Date:	
Topic:	

Name	Signature	Company

Conducted By:	
Signature:	
Date:	

SITE CONTROL LOG

Date / Day / Time:	
Project Name:	
Project Location:	

Time		Name	Organization
In	**Out**		

SITE SAFETY AND HEALTH PLAN
CHANGE APPROVAL FORM

Project Name: _____

Project Location: _____

Date: _____

Requested By: _____

Approval By: _____

Distribution: _____

DESCRIPTION OF SSHP CHANGE REQUESTED

SUPPORTING DOCUMENTATION FOR SSHP CHANGE
(Describe and list attachments)

SSHP CHANGE APPROVAL

SSHO Name / Signature / Date: _____

SHM Name / Signature / Date: _____

PM Name / Signature / Date: _____

COR Name / Signature / Date: _____

SITE SAFETY AND HEALTH PLAN DISTRIBUTION TO SUBCONTRACTOR

A copy of the CAPE Site Safety and Health Plan for the site is being provided to subcontractors who may be affected by activities covered under the scope of this plan. Distribution of the Site Safety and Health Plan to subcontractor firms and their designated contact person is with the understanding that subcontractor personnel involved in this project will review this document, abide by its provisions, and comply with OSHA and other applicable health and safety rules and regulations for work on site.

Date	Name	Signature	Organization

SITE SAFETY AND HEALTH PLAN REVIEW

Project Name:	
Project Location:	
Date:	
Conducted By:	

I have reviewed the CAPE Site Safety and Health Plan for the above indicated site and understand the hazards and control measures required on this project.

I agree to follow the procedures outlined in this plan and to inform the CAPE Project Manager, Site Superintendent, and/or SSHO should any unsafe condition be noted.

I understand that failure to follow safety regulations can be reason for removal from this project.

Date	Name	Signature	Company

TAILGATE SAFETY MEETING RECORD

Date / Day**:**	Time**:**
Project Name**:**	Project Number**:**
Client**:**	Location**:**
Specific Location**:**	
Work Description**:**	
Comments**:**	
SAFETY TOPICS PRESENTED	
Protective Clothing / Equipment**:**	
Chemical Hazards**:**	
Physical Hazards**:**	
Emergency Procedures**:**	
Emergency Hospital**:**	
Hospital Telephone**:**	
Hospital Directions**:**	
Special Equipment**:**	
Other**:**	
NOTE: Company policy requires that you notify your supervisor of any injury or safety incident.	
SAFETY MEETING ATTENDEES	
Name Printed / Initial	Name Printed / Initial
1.	**6.**
2.	**7.**
3.	**8.**
4.	**9.**
5.	**10.**
Meeting conducted by (print name / signature)**:**	

TRAINING ATTENDANCE ROSTER

Project Name:	
Project Location:	
Date:	
Topic	

Date	Name	Signature	Company

Instructor Name:	
Signature:	
Date:	

VEHICLE ACCIDENT REPORT

CAPE VEHICLE	
Date / Time:	Location:
Driver Name:	Accident Date:
Drivers License #:	State:
Driver Address:	Project Location:
Vehicle Year/Make /Model:	
License Plate #:	State:
Vehicle Owner (Circle): Owned / Leased / Rented / Private	
Vehicle Owner Name:	Telephone:
Vehicle Owner Address:	
Vehicle Damage:	Est. Repair Cost:
OTHER VEHICLE	
Driver Name:	Telephone:
Drivers License #:	State
Drivers Address:	
Vehicle Owner Name:	Telephone:
Vehicle Owner Address:	
Insurance Company:	Telephone:
Address:	Policy No.:
Vehicle Year / Make / Model:	Agents Name:
License Plate No.:	State:
Vehicle Damage:	
Passengers (list on back): Yes / No	Injuries (list on back): Yes / No
ACCIDENT DESCRIPTION	
Sketch Attached: Yes / No	Photos Attached: Yes / No
Description:	
WITNESS INFORMATION	
Witness Name:	Telephone:
Address:	
Statement Attached: Yes / No	
POLICE REPORT	
Police Department:	Telephone:
Police Officer Name:	Police Report #:
Date / Time Reported:	
INVESTIGATION AND REVIEW	
Report Prepared By / Date:	
Supervisor Name / Signature / Date:	

(For Safety Staff only)	REPORT NO.	EROC CODE	**UNITED STATES ARMY CORPS OF ENGINEERS ACCIDENT INVESTIGATION REPORT** *(For Use of this Form See Help Menu and USACE Suppl to AR 385-40)*	**REQUIREMENT CONTROL SYMBOL: CEEC-S-8(R2)**

1. ACCIDENT CLASSIFICATION

PERSONNEL CLASSIFICATION	INJURY/ILLNESS/FATAL	PROPERTY DAMAGE	MOTOR VEHICLE INVOLVED	DIVING
GOVERNMENT ☐ CIVILIAN ☐ MILITARY	☐	☐ FIRE INVOLVED ☐ OTHER	☐	☐
☐ CONTRACTOR	☐	☐ FIRE INVOLVED ☐ OTHER	☐	☐
☐ PUBLIC	☐ FATAL ☐ OTHER		☐	

2. PERSONAL DATA

a. Name *(Last, First, MI)*

b. AGE

c. SEX ☐ MALE ☐ FEMALE

d. SOCIAL SECURITY NUMBER

e. GRADE

f. JOB SERIES/TITLE

g. DUTY STATUS AT TIME OF ACCIDENT ☐ ON DUTY ☐ TDY ☐ OFF DUTY

h. EMPLOYMENT STATUS AT TIME OF ACCIDENT ☐ ARMY ACTIVE ☐ ARMY RESERVE ☐ VOLUNTEER ☐ PERMANENT ☐ FOREIGN NATIONAL ☐ SEASONAL ☐ TEMPORARY ☐ STUDENT ☐ OTHER *(Specify)*

3. GENERAL INFORMATION

a. DATE OF ACCIDENT *(month/day/year)*

b. TIME OF ACCIDENT *(Military time)* hrs

c. EXACT LOCATION OF ACCIDENT

d. CONTRACTOR'S NAME (1) PRIME: (2) SUBCONTRACTOR:

e. CONTRACT NUMBER ☐ CIVIL WORKS ☐ MILITARY ☐ OTHER *(Specify)*

f. TYPE OF CONTRACT ☐ CONSTRUCTION ☐ SERVICE ☐ A/E ☐ DREDGE ☐ OTHER *(Specify)*

g. HAZARDOUS/TOXIC WASTE ACTIVITY ☐ SUPERFUND ☐ DERP ☐ IRP ☐ OTHER *(Specify)*

4. CONSTRUCTION ACTIVITIES ONLY *(Fill in line and corresponding code number in box from list - see help menu)*

a. CONSTRUCTION ACTIVITY (CODE) #

b. TYPE OF CONSTRUCTION EQUIPMENT (CODE) #

5. INJURY/ILLNESS INFORMATION *(Include name on line and corresponding code number in box for items e, f & g - see help menu)*

a. SEVERITY OF ILLNESS/INJURY (CODE) #

B. ESTIMATED DAYS LOST

C. ESTIMATED DAYS HOSPITALIZED

D. ESTIMATED DAYS RESTRICTED DUTY

e. BODY PART AFFECTED (CODE)

PRIMARY #

SECONDARY (CODE) #

f. NATURE OF ILLNESS / INJURY (CODE) #

g. TYPE AND SOURCE OF INJURY/ILLNESS

TYPE (CODE) #

SOURCE (CODE) #

6. PUBLIC FATALITY *(Fill in line and correspondence code number in box - see help menu)*

a. ACTIVITY AT TIME OF ACCIDENT (CODE) #

b. PERSONAL FLOATATION DEVICE USED? ☐ YES ☐ NO ☐ N/A

7. MOTOR VEHICLE ACCIDENT

a. TYPE OF VEHICLE ☐ PICKUP/VAN ☐ AUTOMOBILE ☐ TRUCK ☐ OTHER *(Specify)*

b. TYPE OF COLLISION ☐ SIDE SWIPE ☐ HEAD ON ☐ REAR END ☐ BROADSIDE ☐ ROLL OVER ☐ BACKING ☐ OTHER *(Specify)*

c. SEAT BELTS	USED	NOT USED	NOT AVAILABLE
(1) FRONT SEAT			
(2) REAR SEAT			

8. PROPERTY/MATERIAL INVOLVED

a. NAME OF ITEM	B. OWNERSHIP	C. $ AMOUNT OF DAMAGE
(1)		
(2)		
(3)		

9. VESSEL/FLOATING PLANT ACCIDENT *(Fill in line and correspondence code number in box from list - see help menu)*

a. TYPE OF VESSEL/FLOATING PLANT (CODE) #

b. TYPE OF COLLISION/MISHAP (CODE) #

10. ACCIDENT DESCRIPTION *(Use additional paper, if necessary)*

See attached page.

11. CAUSAL FACTOR(S) *(Read Instruction Before Completing)*

a. (Explain YES answers in item 13)	YES	NO
DESIGN: Was design of facility, workplace or equipment a factor?	☐	☐
INSPECTION/MAINTENANCE: Were inspection & maintenance procedures a factor?	☐	☐
PERSON'S PHYSICAL CONDITION: In your opinion, was the physical condition of the person a factor?	☐	☐
OPERATING PROCEDURES: Were operating procedures a factor?	☐	☐
JOB PRACTICES: Were any job safety/health practices not followed when the accident occurred?	☐	☐
HUMAN FACTORS: Did any human factors such as, size or strength of person, etc., contribute to accident?	☐	☐
ENVIRONMENTAL FACTORS: Did heat, cold, dust, sun, glare, etc., contribute to the accident?	☐	☐

a. *(CONTINUED)*	YES	NO
CHEMICAL AND PHYSICAL AGENT FACTORS: Did exposure to chemical agents, such as dust, fumes, mists, vapors or physical agents, such as, noise, radiation, etc., contribute to accident?	☐	☐
OFFICE FACTORS: Did office setting such as, lifting office furniture, carrying, stooping, etc., contribute to the accident?	☐	☐
SUPPORT FACTORS: Were inappropriate tools/resources provided to properly perform the activity/task?	☐	☐
PERSONAL PROTECTIVE EQUIPMENT: Did the improper selection, use or maintenance of personal protective equipment contribute to the accident?	☐	☐
DRUGS/ALCOHOL: In your opinion, was drugs or alcohol a factor to the accident	☐	☐

b. WAS A WRITTEN JOB/ACTIVITY HAZARD ANALYSIS COMPLETED FOR TASK BEING PERFORMED AT TIME OF ACCIDENT?

☐ YES *(If yes, attach a copy.)* ☐ NO

12. TRAINING

a. WAS PERSON TRAINED TO PERFORM ACTIVITY/TASK?	b. TYPE OF TRAINING.	c. DATE OF MOST RECENT FORMAL TRAINING.
☐ YES ☐ NO	☐ CLASSROOM ☐ ON JOB	(Month) (Day) (Year)

13. FULLY EXPLAIN WHAT ALLOWED OR CAUSED THE ACCIDENT; INCLUDE DIRECT AND INDIRECT CAUSES *(See instruction for definition of direct and indirect causes.) (Use additional paper, if necessary)*

a. DIRECT CAUSE

See attached page.

b. INDIRECT CAUSE(S)

See attached page.

14. ACTION(S) TAKEN, ANTICIPATED OR RECOMMENDED TO ELIMINATE CAUSE(S).

DESCRIBE FULLY:

See attached page.

15. DATES FOR ACTIONS IDENTIFIED IN BLOCK 14.

a. BEGINNING (Month/Day/Year)	b. ANTICIPATED COMPLETION (Month/Day/Year)

c. SIGNATURE AND TITLE OF SUPERVISOR COMPLETING REPORT	d. DATE *(Mo/Da/Yr)*	e. ORGANIZATION IDENTIFIER *(Div, Br, Sect)*	f. OFFICE SYMBOL
CORPS _____ CONTRACTOR _____			

16. MANAGEMENT REVIEW *(1st)*

a. ☐ CONCUR b. ☐ NON CONCUR c. COMMENTS

SIGNATURE	TITLE	DATE

17. MANAGEMENT REVIEW *(2nd - Chief Operations, Construction, Engineering, etc.)*

a. ☐ CONCUR ☐ NON CONCUR c. COMMENTS

SIGNATURE	TITLE	DATE

18. SAFETY AND OCCUPATIONAL HEALTH OFFICE REVIEW

a. ☐ CONCUR b. ☐ NON CONCUR c. ADDITIONAL ACTIONS/COMMENTS

SIGNATURE	TITLE	DATE

19. COMMAND APPROVAL

COMMENTS

COMMANDER SIGNATURE	DATE

10. **ACCIDENT DESCRIPTION** *(Continuation)*

13a. **DIRECT CAUSE** *(Continuation)*

13b.	INDIRECT CAUSES *(Continuation)*

14.	ACTION(S) TAKEN, ANTICIPATED, OR RECOMMENDED TO ELIMINATE CAUSE(S) *(Continuation)*

GENERAL. Complete a separate report for each person who was injured, caused, or contributed to the accident (excluding uninjured personnel and witnesses). Use of this form for reporting USACE employee first-aid type injuries not submitted to the Office of Workers' Compensation Programs (OWCP) shall be at the descretion of the FOA commander. Please type or print legibly. Appropriate items shall be marked with an "X" in box(es). If additional space is needed, provide the information on a separate sheet and attach to the completed form. Ensure that these instructions are forwarded with the completed report to the designated management reviewers indicated in sections 16 and 17.

INSTRUCTIONS FOR SECTION 1 - ACCIDENT CLASSIFICATION

(Mark All Boxes That Are Applicable)

a. GOVERNMENT. Mark "CIVILIAN" box if accident involved government civilian employee; mark "MILITARY" box if accident involved U.S. military personnel.

(1) INJURY/ILLNESS/FATALITY - Mark if accident resulted in any government civilian employee injury, illness, or fatality that requires the submission of OWCP Forms CA-1 (injury), CA-2 (illness) or CA-6 (fatality) to OWCP; mark if accident resulted in military personnel lost-time or fatal injury or illness.

(2) PROPERTY DAMAGE - Mark the appropriate box if accident resulted in any damage of $1000 or more to government property (including motor vehicles).

(3) VEHICLE INVOLVED - Mark if accident involved a motor vehicle, regardless of whether "INJURY/ILLNESS/FATALITY" or "PROPERTY DAMAGE" are marked.

(4) DIVING ACTIVITY - Mark if the accident involved an in-house USACE diving activity.

b. CONTRACTOR.

(1) INJURY/ILLNESS/FATALITY - Mark if accident resulted in any contractor lost-time injury/illness or fatality.

(2) PROPERTY DAMAGE - Mark the appropriate box if accident resulted in any damage of $1000 or more to contractor property (including motor vehicles).

(3) VEHICLE INVOLVED - Mark if accident involved a motor vehicle, regardless of whether "INJURY/ILLNESS/FATALITY" or "PROPERTY DAMAGE" are marked.

(4) DIVING ACTIVITY - Mark if the accident involved a USACE Contractor diving activity.

c. PUBLIC.

(1) INJURY/ILLNESS/FATALITY - Mark if accident resulted in public fatality or permanent total disability. (The "OTHER" box will be marked when requested by the FOA to report an unusual non-fatal public accident that could result in claims against the government or as otherwise directed by the FOA Commander).

(2) VOID SPACE - Make no entry.

(3) VEHICLE INVOLVED - Mark if accident resulted in a fatality to a member of the public and involved a motor vehicle, regardless of whether "INJURY/ILLNESS/FATALITY" is marked.

(4) VOID SPACE - Make no entry.

INSTRUCTIONS FOR SECTION 2 - PERSONAL DATA

a. NAME - (MANDATORY FOR GOVERNMENT ACCIDENTS. OPTIONAL AT THE DISCRETION OF THE FOA COMMANDER FOR CONTRACTOR AND PUBLIC ACCIDENTS). Enter last name, first name, middle initial of person involved.

b. AGE - Enter age.

c. SEX - Mark appropriate box.

d. SOCIAL SECURITY NUMBER - (FOR GOVERNMENT PERSONNEL ONLY) Enter the social security number (or other personal identification number if no social security number issued).

e. GRADE - (FOR GOVERNMENT PERSONNEL ONLY) Enter pay grade. Example: 0-6; E-7; WG-8; WS-12; GS-11; etc.

f. JOB SERIES/TITLE - For government civilian employees enter the pay plan, full series number, and job title, e.g., GS-0810/Civil Engineer. For military personnel enter the primary military occupational specialty (PMOS), e.g., 15A30 or 11G50. For contractor employees enter the job title assigned to the injured person, e.g., carpenter, laborer, surveyor, etc.

g. DUTY STATUS - Mark the appropriate box.

(1) ON DUTY - Person was at duty station during duty hours or person was away from duty station during duty hours but on official business at time of the accident.

(2) TDY - Person was on official business, away from the duty station and with travel orders at time of accident. Line-of-duty investigation required.

(3) OFF DUTY - Person was not on official business at time of accident.

h. EMPLOYMENT STATUS - (FOR GOVERNMENT PERSONNEL ONLY) Mark the most appropriate box. If "OTHER" is marked, specify the employment status of the person.

INSTRUCTION FOR SECTION 3 - GENERAL INFORMATION

a. DATE OF ACCIDENT - Enter the month, day, and year of accident.

b. TIME OF ACCIDENT - Enter the local time of accident in military time. Example: 1430 hrs (not 2:30 p.m.).

c. EXACT LOCATION OF ACCIDENT - Enter facts needed to locate the accident scene, (installation/project name, building number, street, direction and distance from closest landmark, etc.).

d. CONTRACTOR NAME

(1) PRIME - Enter the exact name (title of firm) of the prime contractor.

(2) SUBCONTRACTOR - Enter the name of any subcontractor involved in the accident.

e. CONTRACT NUMBER - Mark the appropriate box to identify if contract is civil works, military, or other: if "OTHER" is marked, specify contract appropriation on line provided. Enter complete contract number of prime contract, e.g., DACW 09-85-C-0100.

f. TYPE OF CONTRACT - Mark appropriate box. A/E means architect/engineer. If "OTHER" is marked, specify type of contract on line provided.

g. HAZARDOUS/TOXIC WASTE ACTIVITY (HTW) - Mark the box to identify the HTW activity being performed at the time of the accident. For Superfund, DERP, and Installation Restoration Program (IRP) HTW activities include accidents that occurred during inventory, predesign, design, and construction. For the purpose of accident reporting, DERP Formerly Used DoD Site (FUDS) activities and IRP activities will be treated separately. For Civil Works O&M HTW activities mark the "OTHER" box.

INSTRUCTIONS FOR SECTION 4 - CONSTRUCTION ACTIVITIES

a. CONSTRUCTION ACTIVITY - Select the most appropriate construction activity being performed at time of accident from the list below. Enter the activity name and place the corresponding code number identified in the box.

CONSTRUCTION ACTIVITY LIST

1. MOBILIZATION
2. SITE PREPARATION
3. EXCAVATION/TRENCHING
4. GRADING (EARTHWORK)
5. PIPING/UTILITIES
6. FOUNDATION
7. FORMING
8. CONCRETE PLACEMENT
9. STEEL ERECTION
10. ROOFING
11. FRAMING
12. MASONRY
13. CARPENTRY
14. ELECTRICAL
15. SCAFFOLDING/ACCESS
16. MECHANICAL
17. PAINTING
18. EOUIPMENT/MAINTENANCE
19. TUNNELING
20. WAREHOUSING/STORAGE
21. PAVING
22. FENCING
23. SIGNING
24. LANDSCAPING/IRRIGATION
25. INSULATION
26. DEMOLITION

b. TYPE OF CONSTRUCTION EQUIPMENT - Select the equipment involved in the accident from the list below. Enter the name and place the corresponding code number identified in the box. If equipment is not included below, use code 24, "OTHER", and write in specific type of equipment.

CONSTRUCTION EQUIPMENT

1. GRADER
2. DRAGLINE
3. CRANE (ON VESSEL/BARGE)
4. CRANE (TRACKED)
5. CRANE (RUBBER TIRE)
6. CRANE (VEHICLE MOUNTED)
7. CRANE (TOWER)
8. SHOVEL
9. SCRAPER
10. PUMP TRUCK (CONCRETE)
11. TRUCK (CONCRETE/TRANSIT MIXER)
12. DUMP TRUCK (HIGHWAY)
13. DUMP TRUCK (OFF HIGHWAY)
14. TRUCK (OTHER)
15. FORKLIFT
16. BACKHOE
17. FRONT-END LOADER
18. PILE DRIVER
19. TRACTOR (UTILITY)
20. MANLIFT
21. DOZER
22. DRILL RIG
23. COMPACTOR/VIBRATORY ROLLER
24. OTHER

INSTRUCTIONS FOR SECTION 5 - INJURY/ILLNESS INFORMATION

a. SEVERITY OF INJURY/ILLNESS - Reference para 2-10 of USACE Suppl 1 to AR 385-40 and enter code and description from list below.

NOI	NO INJURY
FAT	FATALITY
PTL	PERMANENT TOTAL DISABILITY
PPR	ERMANENT PARTIAL DISABILITY
LWD	LOST WORKDAY CASE INVOLVING DAYS AWAY FROM WORK
NLW	RECORDABLE CASE WITHOUT LOST WORKDAYS

b. ESTIMATED DAYS LOST - Enter the estimated number of workdays the person will lose from work.

c. ESTIMATED DAYS HOSPITALIZED - Enter the estimated number of workdays the person will be hospitalized.

d. ESTIMATED DAYS RESTRICTED DUTY - Enter the estimated number of workdays the person, as a result of the accident, will not be able to perform all of their regular duties.

e. BODY PART AFFECTED - Select the most appropriate primary and when applicable, secondary body part affected from the list below. Enter body part name on line and place the corresponding code letters identifying that body part in the box.

GENERAL BODY AREA	CODE	BODY PART NAME
ARM/WRIST	AB	ARM AND WRIST
	AS	ARM OR WRIST
TRUNK, EXTERNAL MUSCULATURE	B1	SINGLE BREAST
	B2	BOTH BREASTS
	B3	SINGLE TESTICLE
	B4	BOTH TESTICLES
	BA	ABDOMEN
	BC	CHEST
	BL	LOWER BACK
	BP	PENIS
	BS	SIDE
	BU	UPPER BACK
	BW	WAIST
	BZ	TRUNK OTHER
HEAD, INTERNAL	C1	SINGLE EAR INTERNAL
	C2	BOTH EARS INTERNAL
	C3	SINGLE EYE INTERNAL
	C4	BOTH EYES INTERNAL
	CB	BRAIN
	CC	CRANIAL BONES
	CD	TEETH
	CJ	JAW
	CL	THROAT, LARYNX
	CM	MOUTH
	CN	NOSE
	CR	THROAT, OTHER
	CT	TONGUE
	CZ	HEAD OTHER INTERNAL
ELBOW	EB	BOTH ELBOWS
	ES	SINGLE ELBOW
FINGER	F1	FIRST FINGER
	F2	BOTH FIRST FINGERS
	F3	SECOND FINGER
	F4	BOTH SECOND FINGERS
	F5	THIRD FINGER
	F6	BOTH THIRD FINGERS
	F7	FOURTH FINGER
	F8	BOTH FOURTH FINGERS
TOE	G1	GREAT TOE
	G2	BOTH GREAT TOES
	G3	TOE OTHER
	G4	TOES OTHER

GENERAL BODY AREA	CODE	BODY PART NAME
HEAD, EXTERNAL	H1	EYES EXTERNAL
	H2	BOTH EYES EXTERNAL
	H3	EAR EXTERNAL
	H4	BOTH EARS EXTERNAL
	HC	CHIN
	HF	FACE
	HK	NECK/THROAT
	HM	MOUTH/LIPS
	HN	NOSE
	HS	SCALP
KNEE	KB	BOTH KNEES
	KS	KNEE
LEG, HIP, ANKLE, BUTTOCK	LB	BOTH LEGS/HIPS/ ANKLES/BUTTOCKS
	LS	SINGLE LEG/HIP ANKLE/BUTTOCK
HAND	MB	BOTH HANDS
	MS	SINGLE HAND
FOOT	PB	BOTH FEET
	PS	SINGLE FOOT
TRUNK, BONES	R1	SINGLE COLLAR BONE
	R2	BOTH COLLAR BONES
	R3	SHOULDER BLADE
	R4	BOTH SHOULDER BLADES
	RB	RIB
	RS	STERNUM (BREAST BONE)
	RV	VERTEBRAE (SPINE; DISC)
	RZ	TRUNK BONES OTHER
SHOULDER	SB	BOTH SHOULDERS
	SS	SINGLE SHOULDER
THUMB	TB	BOTH THUMBS
	TS	SINGLE THUMB
TRUNK, INTERNAL ORGANS	V1	LUNG, SINGLE
	V2	LUNGS, BOTH
	V3	KIDNEY, SINGLE
	V4	KIDNEYS, BOTH
	VH	HEART
	VL	LIVER
	VR	REPRODUCTIVE ORGANS
	VS	STOMACH
	VV	INTESTINES
	VZ	TRUNK, INTERNAL; OTHER

f. NATURE OF INJURY/ILLNESS - Select the most appropriate nature of injury/illness from the list below. This nature of injury/illness shall correspond to the primary body part selected in 5e, above. Enter the nature of injury/illness name on the line and place the corresponding CODE letters in the box provided.

*** The injury or condition selected below must be caused by a specific incident or event which occurred during a single work day or shift.**

GENERAL NATURE CATEGORY	CODE	NATURE OF INJURY NAME
*TRAUMATIC INJURY OR DISABILITY	TA	AMPUTATION
	TB	BACK STRAIN
	TC	CONTUSION; BRUISE; ABRASION
	TD	DISLOCATION
	TF	FRACTURE
	TH	HERNIA
	TK	CONCUSSION
	TL	LACERATION, CUT
	TP	PUNCTURE
	TS	STRAIN, MULTIPLE
	TU	BURN, SCALD, SUNBURN
	TI	TRAUMATIC SKIN DISEASES/CONDITIONS INCLUDING DERMATITIS
	TR	TRAUMATIC RESPIRATORY DISEASE
	TQ	TRAUMATIC FOOD POISONING
	TW	TRAUMATIC TUBERCULOSIS
	TX	TRAUMATIC VIROLOGICAL/ INFECTIVE/PARASITIC DISEASE
	T1	TRAUMATIC CEREBRAL VASCULAR CONDITION/STROKE
	T2	TRAUMATIC HEARING LOSS
	T3	TRAUMATIC HEART CONDITION
	T4	TRAUMATIC MENTAL DISORDER, STRESS; NERVOUS CONDITION
	T8	TRAUMATIC INJURY - OTHER (EXCEPT DISEASE, ILLNESS)

** A nontraumatic physiological harm or loss of capacity produced by systemic infection; continued or repeated stress or strain; exposure to toxins, poisons, fumes, etc.; or other continued and repeated exposures to conditions of the work environment over a long period of time. For practical purposes, an occupational illness/disease or disability is any reported condition which does not meet the definition of traumatic injury or disability as described above.

GENERAL NATURE CATEGORY	CODE	NATURE OF INJURY NAME
**NON-TRAUMATIC ILLNESS/DISEASE OR DISABILITY		
RESPIRATORY DISEASE	RA	ASBESTOSIS
	RB	BRONCHITIS
	RE	EMPHYSEMA
	RP	PNEUMOCONIOSIS
	RS	SILICOSIS
	R9	RESPIRATORY DISEASE, OTHER
VIROLOGICAL, INFECTIVE & PARASITIC DISEASES	VB	BRUCELLOSIS
	VC	COCCIDIOMYCOSIS
	VF	FOOD POISONING
	VH	HEPATITIS
	VM	MALARIA
	VS	STAPHYLOCOCCUS
	VT	TUBERCULOSIS
	V9	VIROLOGICAL/INFECTIVE/ PARASITIC - OTHER
DISABILITY, OCCUPATIONAL	DA	ARTHRITIS, BURSITIS
	DB	BACK STRAIN, BACK SPRAIN
	DC	CEREBRAL VASCULAR CONDITION; STROKE

GENERAL NATURE CATEGORY	CODE	NATURE OF INJURY NAME	CODE
	DD	ENDEMIC DISEASE (OTHER THAN CODE TYPES R&S)	
	DE	EFFECT OF ENVIRONMENTAL CONDITION	
	DH	HEARING LOSS	0310
	DK	HEART CONDITION	0320
	DM	MENTAL DISORDER, EMOTIONAL STRESS, NERVOUS CONDITION	0330
	DR	RADIATION	0410
	DS	STRAIN, MULTIPLE	0420
	DU	ULCER	0430
	DV	OTHER VASCULAR CONDITIONS	0440
	D9	DISABILITY, OTHER	
SKIN DISEASE OR CONDITION	SB	BIOLOGICAL	0510
	SC	CHEMICAL	0520
	S9	DERMATITIS, UNCLASSIFIED	

g. TYPE AND SOURCE OF INJURY/ILLNESS (CAUSE) - Type and Source Codes are used to describe what caused the incident. The Type Code stands for an ACTION and the Source Code for an OBJECT or SUBSTANCE. Together, they form a brief description of how the incident occurred. Where there are two different sources, code the initiating source of the incident (see example 1, below). Examples:

(1) An employee tripped on carpet and struck his head on a desk.
TYPE: 210 (fell on same level) SOURCE: 0110 (walking/working surface).

NOTE: This example would NOT be coded 120 (struck against) and 0140 (furniture).

(2) A Park Ranger contracted dermatitis from contact with poison ivy/oak.
TYPE: 510 (contact) SOURCE: 0920 (plant)

(3) A lock and dam mechanic punctured his finger with a metal sliver while grinding a turbine blade.
TYPE: 410 (punctured by) SOURCE: 0830 (metal)

(4) An employee was driving a government vehicle when it was struck by another vehicle.
TYPE: 800 (traveling in) SOURCE: 0421 (government-owned vehicle, as driver)

NOTE: The Type Code 800, "Traveling In" is different from the other type codes in that its function is not to identify factors contributing to the injury or fatality, but rather to collect data on the type of vehicle the employee was operating or traveling in at the time of the incident.

Select the most appropriate TYPE and SOURCE identifier from the list below and enter the name on the line and the corresponding code in the appropriate box.

CODE	TYPE OF INJURY NAME
	STRUCK
0110	STRUCK BY
0111	STRUCK BY FALLING OBJECT
0120	STRUCK AGAINST
0210	FELL, SLIPPED, TRIPPED
0220	FELL ON SAME LEVEL
0230	FELL ON DIFFERENT LEVEL
	SLIPPED, TRIPPED (NO FALL)
	CAUGHT
	CAUGHT ON
	CAUGHT IN
	CAUGHT BETWEEN
	PUNCTURED, LACERATED
	PUNCTURED BY
	CUT BY
	STUNG BY
	BITTEN BY
	CONTACTED
	CONTACTED WITH (INJURED PERSON MOVING)
	CONTACTED BY (OBJECT WAS MOVING)
	EXERTED
	LIFTED, STRAINED BY (SINGLE ACTION)
	STRESSED BY (REPEATED ACTION)
	EXPOSED
	INHALED
	INGESTED
	ABSORBED
	EXPOSED TO
	TRAVELING IN

CODE	SOURCE OF INJURY NAME
	BUILDING OR WORKING AREA
	WALKING/WORKING SURFACE (FLOOR, STREET, SIDEWALKS, ETC.)
	STAIRS, STEPS
	LADDER
	FURNITURE, FURNISHINGS, OFFICE EQUIPMENT
	BOILER, PRESSURE VESSEL
	EQUIPMENT LAYOUT (ERGONOMIC)
	WINDOWS, DOORS
	ELECTRICITY
	ENVIRONMENTAL CONDITION
	TEMPERATURE EXTREME (INDOOR)
	WEATHER (ICE, RAIN, HEAT, ETC.)
	FIRE, FLAME, SMOKE (NOT TOBACCO)
	NOISE
	RADIATION
	LIGHT
	VENTILATION
	TOBACCO SMOKE
	STRESS (EMOTIONAL)
	CONFINED SPACE
	MACHINE OR TOOL
	HAND TOOL (POWERED; SAW, GRINDER, ETC.)
	HAND TOOL (NONPOWERED)
	MECHANICAL POWER TRANSMISSION APPARATUS
	GUARD, SHIELD (FIXED, MOVEABLE, INTERLOCK)

CODE	TYPE OF INJURY NAME
0350	VIDEO DISPLAY TERMINAL
0360	PUMP, COMPRESSOR, AIR PRESSURE TOOL
0370	HEATING EQUIPMENT
0380	WELDING EQUIPMENT
0400	VEHICLE
0411	AS DRIVER OF PRIVATELY OWNED/RENTAL VEHICLE
0412	AS PASSENGER OF PRIVATELY OWNED/RENTAL VEHICLE
0421	DRIVER OF GOVERNMENT VEHICLE
0422	PASSENGER OF GOVERNMENT VEHICLE
0430	COMMON CARRIER (AIRLINE, BUS, ETC.)
0440	AIRCRAFT (NOT COMMERCIAL)
0450	BOAT, SHIP, BARGE
0500	MATERIAL HANDLING EQUIPMENT
0510	EARTHMOVER (TRACTOR, BACKHOE, ETC.)
0520	CONVEYOR (FOR MATERIAL AND EQUIPMENT)
0530	ELEVATOR, ESCALATOR, PERSONNEL HOIST
0540	HOIST, SLING CHAIN, JACK
0550	CRANE
0551	FORKLIFT
0560	HANDTRUCK, DOLLY
0600	DUST, VAPOR, ETC.
0610	DUST (SILICA, COAL, ETC.)
0620	FIBERS
0621	ASBESTOS
0630	GASES
0631	CARBON MONOXIDE
0640	MIST, STEAM, VAPOR, FUME
0641	WELDING FUMES
0650	PARTICLES (UNIDENTIFIED)
0700	CHEMICAL, PLASTIC, ETC.
0711	DRY CHEMICAL - CORROSIVE
0712	DRY CHEMICAL - TOXIC
0713	DRY CHEMICAL - EXPLOSIVE
0714	DRY CHEMICAL FLAMMABLE
0721	LIQUID CHEMICAL - CORROSIVE
0722	LIQUID CHEMICAL - TOXIC
0723	LIQUID CHEMICAL - EXPLOSIVE
0724	LIQUID CHEMICAL - FLAMMABLE
0730	PLASTIC
0740	WATER
0750	MEDICINE
0800	INAMINATE OBJECT
0810	BOX, BARREL, ETC.
0820	PAPER
0830	METAL ITEM, MINERAL
0831	NEEDLE
0840	GLASS

CODE	SOURCE OF INJURY NAME
0850	SCRAP, TRASH
0860	WOOD
0870	FOOD
0880	CLOTHING, APPAREL, SHOES
0900	ANIMATE OBJECT
0911	DOG
0912	OTHER ANIMAL
0920	PLANT
0930	INSECT
0940	HUMAN (VIOLENCE)
0950	HUMAN (COMMUNICABLE DISEASE)
0960	BACTERIA, VIRUS (NOT HUMAN CONTACT)
1000	PERSONAL PROTECTIVE EQUIPMENT
1010	PROTECTIVE CLOTHING, SHOES, GLASSES, GOGGLES
1020	RESPIRATOR, MASK
1021	DIVING EQUIPMENT
1030	SAFETY BELT, HARNESS
1040	PARACHUTE

INSTRUCTIONS FOR SECTION 6 - PUBLIC FATALITY

a. ACTIVITY AT TIME OF ACCIDENT - Select the activity being performed at the time of the accident from the list below. Enter the activity name on the line and the corresponding number in the box. If the activity performed is not identified on the list, select from the most appropriate primary activity area (water related, non-water related or other activity), the code number for "Other", and write in the activity being performed at the time of the accident.

WATER RELATED RECREATION

1. Sailing
2. Boating-powered
3. Boating-unpowered
4. Water skiing
5. Fishing from boat
6. Fishing from bank dock or pier
7. Fishing while wading
8. Swimming/supervised area
9. Swimming/designated area
10. Swimming/other area
11. Underwater activities (skin diving, scuba, etc.)
12. Wading
13. Attempted rescue
14. Hunting from boat
15. Other

NON-WATER RELATED RECREATION

16. Hiking and walking
17. Climbing (general)
18. Camping/picnicking authorized area
19. Camping/picnicking unauthorized area
20. Guided tours
21. Hunting
22. Playground equipment
23. Sports/summer (baseball, football, etc.)
24. Sports/winter (skiing, sledding, snowmobiling etc.)
25. Cycling (bicycle, motorcycle, scooter)
26. Gliding
27. Parachuting
28. Other non-water related

OTHER ACTIVITIES

29. Unlawful acts (fights, riots, vandalism, etc.)
30. Food preparation/serving
31. Food consumption
32. Housekeeping
33. Sleeping
34. Pedestrian struck by vehicle
35. Pedestrian other acts
36. Suicide
37. "Other" activities

b. PERSONAL FLOTATION DEVICE USED - If fatality was water-related was the victim wearing a person flotation device? Mark the appropriate box.

INSTRUCTIONS FOR SECTION 7 - MOTOR VEHICLE ACCIDENT

a. TYPE OF VEHICLE - Mark appropriate box for each vehicle involved. If more than one vehicle of the same type is involved, mark both halves of the appropriate box. USACE vehicle(s) involved shall be marked in left half of appropriate box.

b. TYPE OF COLLISION - Mark appropriate box.

c. SEAT BELT - Mark appropriate box.

INSTRUCTIONS FOR SECTION 8 - PROPERTY/MATERIAL INVOLVED

a. NAME OF ITEM - Describe all property involved in accident. Property/material involved means material which is damaged or whose use or misuse contributed to the accident. Include the name, type, model; also include the National Stock Number (NSN) whenever applicable.

b. OWNERSHIP - Enter ownership for each item listed. (Enter one of the following: USACE; OTHER GOVERNMENT; CONTRACTOR; PRIVATE)

c. $ AMOUNT OF DAMAGE - Enter the total estimated dollar amount of damage (parts and labor), if any.

INSTRUCTIONS FOR SECTION 9 - VESSEL/ FLOATING PLANT ACCIDENT

a. TYPE OF VESSEL/FLOATING PLANT - Select the most appropriate vessel/floating plant from list below. Enter name and place corresponding number in box. If item is not listed below, enter item number for "OTHER" and write in specific type of vessel floating plant.

VESSEL/FLOATING PLANTS

1. ROW BOAT
2. SAIL BOAT
3. MOTOR BOAT
4. BARGE
5. DREDGE/HOPPER
6. DREDGE/SIDE CASTING
7. DREDGE/DIPPER
8. DREDGE/CLAMSHELL, BUCKET
9. DREDGE/PIPE LINE
10. DREDGE/DUST PAN
11. TUG BOAT
12. OTHER

b. COLLISION/MISHAP - Select from the list below the object(s) that contributed to the accident or were damaged in the accident.

COLLISION/MISHAP

1. COLLISION W/OTHER VESSEL
2. UPPER GUIDE WALL
3. UPPER LOCK GATES
4. LOCK WALL
5. LOWER LOCK GATES
6. LOWER GUIDE WALL
7. HAULAGE UNIT
8. BREAKING TOW
9. TOW BREAKING UP
10. SWEPT DOWN ON DAM
11. BUOY/DOLPHIN/CELL
12. WHARF OR DOCK
13. OTHER

INSTRUCTIONS FOR SECTION 10 - ACCIDENT DESCRIPTION

DESCRIBE ACCIDENT - Fully describe the accident. Give the sequence of events that describe what happened leading up to and including the accident. Fully identify personnel and equipment involved and their role(s) in the accident. Ensure that relationships between personnel and equipment are clearly specified. Continue on blank sheets if necessary and attach to this report.

INSTRUCTIONS FOR SECTION 11 - CAUSAL FACTORS

a. Review thoroughly. Answer each question by marking the appropriate block. If any answer is yes, explain in item 13 below. Consider, as a minimum, the following:

(1) DESIGN - Did inadequacies associated with the building or work site play a role? Would an improved design or layout of the equipment or facilities reduce the likelihood of similar accidents? Were the tools or other equipment designed and intended for the task at hand?

(2) INSPECTION/MAINTENANCE - Did inadequately or improperly maintained equipment, tools, workplace, etc. create or worsen any hazards that contributed to the accident? Would better equipment, facility, work site or work activity inspections have helped avoid the accident?

(3) PERSON'S PHYSICAL CONDITION - Do you feel that the accident would probably not have occurred if the employee was in "good" physical condition? If the person involved in the accident had been in better physical condition, would the accident have been less severe or avoided altogether? Was over exertion a factor?

(4) OPERATING PROCEDURES - Did a lack of or inadequacy within established operating procedures contribute to the accident? Did any aspect of the procedures introduce any hazard to, or increase the risk associated with the work process? Would establishment or improvement of operating procedures reduce the likelihood of similar accidents?

(5) JOB PRACTICES - Were any of the provisions of the Safety and Health Requirements Manual (EM 385-1-1) violated? Was the task being accomplished in a manner which was not in compliance with an established job hazard analysis or activity hazard analysis? Did any established job practice (including EM 385-1-1) fail to adequately address the task or work process? Would better job practices improve the safety of the task?

(6) HUMAN FACTORS - Was the person under undue stress (either internal or external to the job)? Did the task tend toward overloading the capabilities of the person; i.e., did the job require tracking and reacting to many external inputs such as displays, alarms, or signals? Did the arrangement of the workplace tend to interfere with efficient task performance? Did the task require reach, strength, endurance, agility, etc., at or beyond the capabilities of the employee? Was the work environment ill-adapted to the person? Did the person need more training, experience, or practice in doing the task? Was the person inadequately rested to perform safely?

(7) ENVIRONMENTAL FACTORS - Did any factors such as moisture, humidity, rain, snow, sleet, hail, ice, fog, cold, heat, sun, temperature changes, wind, tides, floods, currents, dust, mud, glare, pressure changes, lightning, etc., play a part in the accident?

(8) CHEMICAL AND PHYSICAL AGENT FACTORS - Did exposure to chemical agents (either single shift exposure or long-term exposure) such as dusts, fibers (asbestos, etc.), silica, gases (carbon monoxide, chlorine, etc.,), mists, steam, vapors, fumes, smoke, other particulates, liquid or dry chemicals that are corrosive, toxic, explosive or flammable, byproducts of combustion or physical agents such as noise, ionizing radiation, non-ionizing radiation (UV radiation created during welding, etc.) contribute to the accident/incident?

(9) **OFFICE FACTORS** - Did the fact that the accident occurred in an office setting or to an office worker have a bearing on its cause? For example, office workers tend to have less experience and training in performing tasks such as lifting office furniture. Did physical hazards within the office environment contribute to the hazard?

(10) **SUPPORT FACTORS** - Was the person using an improper tool for the job? Was inadequate time available or utilized to safely accomplish the task? Were less than adequate personnel resources (in terms of employee skills, number of workers, and adequate supervision) available to get the job done properly? Was funding available, utilized, and adequate to provide proper tools, equipment, personnel, site preparation, etc.?

(11) **PERSONAL PROTECTIVE EQUIPMENT** - Did the person fail to use appropriate personal protective equipment (gloves, eye protection, hard-toed shoes, respirator, etc.) for the task or environment? Did protective equipment provided or worn fail to provide adequate protection from the hazard(s)? Did lack of or inadequate maintenance of protective gear contribute to the accident?

(12) **DRUGS/ALCOHOL** - Is there any reason to believe the person's mental or physical capabilities, judgment, etc., were impaired or altered by the use of drugs or alcohol? Consider the effects of prescription medicine and over the counter medications as well as illicit drug use. Consider the effect of drug or alcohol induced "hangovers".

b. **WRITTEN JOB/ACTIVITY HAZARD ANALYSIS** - Was a written Job/Activity Hazard Analysis completed for the task being performed at the time of the accident? Mark the appropriate box. If one was performed, attach a copy of the analysis to the report.

INSTRUCTIONS FOR SECTION 12 - TRAINING

a. **WAS PERSON TRAINED TO PERFORM ACTIVITY/TASK?** - For the purpose of this section "trained" means the person has been provided the necessary information (either formal and/or on-the-job (OJT) training) to competently perform the activity/task in a safe and healthful manner.

b. **TYPE OF TRAINING** - Mark the appropriate box that best indicates the type of training; (classroom or on-the-job) that the injured person received before the accident happened.

c. **DATE OF MOST RECENT TRAINING** - Enter the month, day, and year of the last formal training completed that covered the activity task being performed at the time of the accident.

INSTRUCTIONS FOR SECTION 13 - CAUSES

a. DIRECT CAUSES - The direct cause is that single factor which most directly lead to the accident. See examples below.

b. INDIRECT CAUSES - Indirect causes are those factors which contributed to but did not directly initiate the occurrence of the accident.

Examples for section 13:

a. Employee was dismantling scaffold and fell 12 feet from unguarded opening.

Direct cause: failure to provide fall protection at elevation.
Indirect causes: failure to enforce USACE safety requirements; improper training/motivation of employee (possibility that employee was not knowledgeable of USACE fall protection requirements or was lax in his attitude towards safety); failure to ensure provision of positive fall protection whenever elevated; failure to address fall protection during scaffold dismantling in phase hazard analysis.

b. Private citizen had stopped his vehicle at intersection for red light when vehicle was struck in rear by USACE vehicle. (Note: USACE vehicle was in proper/safe working condition).

Direct cause: failure of USACE driver to maintain control of and stop USACE vehicle within safe distance.
Indirect cause: failure of employee to pay attention to driving (defensive driving).

INSTRUCTIONS FOR SECTION 14 - ACTION TO ELIMINATE CAUSE(S)

DESCRIPTION - Fully describe all the actions taken, anticipated, and recommended to eliminate the cause(s) and prevent reoccurrence of similar accidents/illnesses. Continue on blank sheets of paper if necessary to fully explain and attach to the completed report form.

INSTRUCTIONS FOR SECTION 15 - DATES FOR ACTION

a. **BEGIN DATE** - Enter the date when the corrective action(s) identified in section 14 will begin.

b. **COMPLETE DATE** - Enter the date when the corrective action(s) identified in section 14 will be completed.

c. **TITLE AND SIGNATURE** - Enter the title and signature of supervisor completing the accident report. For a GOVERNMENT employee accident/illness the immediate supervisor will complete and sign the report. For PUBLIC accidents the USACE Project Manager/Area Engineer responsible for the USACE property where the accident happened shall complete and sign the report. For CONTRACTOR accidents the Contractor's project manager shall complete and sign the report and provide to the USACE supervisor responsible for oversight of that contractor activity. This USACE supervisor shall also sign the report. Upon entering the information required in 15.d, 15.e and 15.f below, the responsible USACE supervisor shall forward the report for mangement review as indicated in section 16.

d. **DATE SIGNED** - Enter the month, day, and year that the report was signed by the responsible supervisor.

e. **ORGANIZATION NAME** - For GOVERNMENT employee accidents enter the USACE organization name (Division, Branch, Section, etc.) of the injured employee. For PUBLIC accidents enter the USACE organization name for the person identified in block 15.c. For CONTRACTOR accidents enter the USACE organization name for the USACE office responsible for providing contract administration oversight.

f. **OFFICE SYMBOL** - Enter the latest complete USACE Office Symbol for the USACE organization identified in block 15.e.

INSTRUCTIONS FOR SECTION 16 - MANAGEMENT REVIEW (1st)

1ST REVIEW - Each USACE FOA shall determine who will provide 1st management review. The responsible USACE supervisor in section 15.c shall forward the completed report to the USACE office designated as the 1st Reviewer by the FOA. Upon receipt, the Chief of the Office shall review the completed report, mark the appropriate box, provide substantive comments, sign, date, and forward to the FOA Staff Chief (2nd review) for review and comment.

INSTRUCTIONS FOR SECTION 17 - MANAGEMENT REVIEW (2nd)

2ND REVIEW - The FOA Staff Chief (i.e., FOA Chief of Construction, Operations, Engineering, Planning, etc.) shall mark the appropriate box, review the completed report, provide substantive comments, sign, date, and return to the FOA Safety and Occupational Health Office.

INSTRUCTIONS FOR SECTION 18 - SAFETY AND OCCUPATIONAL HEALTH REVIEW

3RD REVIEW - The FOA Safety and Occupational Health Office shall review the completed report, mark the appropriate box, ensure that any inadequacies, discrepancies, etc. are rectified by the responsible supervisor and management reviewers, provide substantive comments, sign, date and forward to the FOA Commander for review, comment, and signature.

INSTRUCTION FOR SECTION 19 - COMMAND APPROVAL

4TH REVIEW - The FOA Commander shall (to include the person designated Acting Commander in his absence) review the completed report, comment if required, sign, date, and forward the report to the FOA Safety and Occupational Health Office. Signature authority shall not be delegated.

ATTACHMENT 2

EMERGENCY CONTACT LIST

ATTACHMENT 2

EMERGENCY CONTACT LIST

Contact	Telephone Number
Ambulance/Paramedics/Fire/Police – Emergency	9-1-1
Emergency Hospital: Saint Clare's Hospital 25 Pocono Road, Denville, NJ 07834	(973) 625-6000
Borough of Rockaway Department of Public Works Joe Rossi, DPW Supervisor	Office: (973) 713-8139 Mobile: (973) 627-7025
USACE NY District ACO Neal Kolb, PE	Office: (743) 846-5830 Mobile: (732) 616-8209
USACE NY District COR (Michael C. Johnson)	Office: (201) 226-6602 Mobile: (973) 418-0586
USACE NY District Project Engineer (Kevin P. O'Brien) 21 Pine Street, Suite 121, Rockaway, NJ 07866	Office: (973) 627-2013 Mobile: (862) 219-1163
USACE NY District Alt. Project Engineer (Kam Chan)	Office: (973) 627-2013 Mobile: (201) 226-6643
USACE KC District Project Manager (Saqib Khan)	Office: (816) 389-3239 Mobile: (816) 695-5082
CAPE Project Office (Rockaway, NJ) 41 Pine Street, Suite 110, Rockaway, NJ 07866	Office: (973) 627-4705 FAX: (973) 627-4706
CAPE Project Manager (David H. Bettendorf, PG)	Office: (443) 276-1994 Mobile: (240) 625-4409
CAPE Project Superintendent (Charlie McNeil)	Office: (973) 627-4705 Mobile: (732) 237-4141
CAPE Site Safety and Health Officer (Robert Landle, PG)	Office: (973) 627-4705 Mobile: (732) 904-5630
CAPE Alt. Project Superintendent/Foreman (Chris Morrison)	Office: (973) 627-4705 Mobile: (856) 491-3308
CAPE CQCSM (Humberto Altamirano)	Office: (973) 627-4705 Mobile: (478) 256-8819
CAPE Safety and Health Manager (Glen Mayekawa, CIH)	Office: (714) 599-9071 Mobile: (714) 920-7483

EMERGENCY HOSPITAL AND ROUTE

Emergency Hospital:
Saint Clare's Hospital
25 Pocono Road, Denville, NJ 07834
(973) 625-6000

Emergency Hospital Route:

1) From 1 East Main Street, Rockaway, NJ; Go toward Franklin Avenue, Mill Lane (go 0.9 miles);
2) Continue on US-46 (go 1.2 miles);
3) Bear Right toward RT-53 North (go 0.1 miles);
4) Turn Right on E. Main Street (RT-53 North) (go 0.1 miles);
5) Turn Right on Diamond Springs Road (go 0.3 miles);
6) Turn Right on Pocono Road (go 0.5 miles);
7) Arrive at Saint Clare's Hospital.

NOTE: SSHO must drive emergency hospital route before start of field work.

ATTACHMENT 3

LIST OF SUBCONTRACTORS

ATTACHMENT 3

LIST OF KEY SUBCONTRACTORS

Project Name:	Remedial Action Activities at the East Main/Wall Street Plume of the Rockaway Borough Well Field Superfund Site
Project Location:	Rockaway Borough, Morris County, NJ

CAPE Subcontractor (Surveyor): Lan Associates Engineering Address: 445 Godwin Ave., Midland Park, NJ Contact: Matthew Webb	Office: (201) 447-6400 FAX: (201) 447-1233
CAPE Subcontractor (Geotechnical Engineering): ANS Consultants, Inc Address: 4405 South Clinton Avenue, South Plainfield, NJ Contact: Atul Shah	Office: (800) 545-2885 FAX: (908) 754-8633
CAPE Subcontractor (Engineering Services): Camp Dresser & McKee, Inc. Address: Raritan Plaza I, Edison, NJ 08818 Contact: Kershu Tan	Office: (732) 225-7000 FAX: (732) 225-7851
CAPE Subcontractor (Drilling Services): B&B Drilling P.O. Box 8, Netcong, NJ 07857 Contact: Robert Seybold	Office: (973) 347-2250 FAX: (973) 347-3864
CAPE Subcontractor (Transporter): Soil Safe, Inc. Address: 378 Route 30, Logan NJ Contact: Tara Bernard	Office: (856) 562-5052 FAX: (856) 467-0515
CAPE Subcontractor (Laboratory): Test America Labs Address: 4955 Yarrow Street, Arvarda, CO Contact: Debra Hinderer	Office: (303) 736-0134

ATTACHMENT 4

LIST OF DESIGNATED FIRST-AID RESPONDERS

ATTACHMENT 4

LIST OF DESIGNATED FIRST-AID RESPONDERS

Project Name:	Remedial Action Activities at the East Main/Wall Street Plume of the Rockaway Borough Well Field Superfund Site
Project Location:	Rockaway Borough, Morris County, NJ

CAPE has designated personnel to act in the capacity of first-aid responders for medical emergencies on this project as indicated below.

Name	First-Aid Training	CPR Training	BBP Training
Mayekawa, Glen (CAPE)	11/20/09[ARC]	11/20/09[ARC]	9/16/03
Robert Landle (CAPE)	3/1/09	3/1/09	7/28/10
Ken Beatty (CAPE)	7/09/10 [ARC]	7/09/10 [ARC]	5/13/04

Legend:

AHA: American Heart Association
ARC: American Red Cross
BBP: Bloodborne Pathogen
CPR: Cardiopulmonary Resuscitation.

ATTACHMENT 5

LIST OF DESIGNATED COMPETENT PERSONS

ATTACHMENT 5

LIST OF DESIGNATED COMPETENT PERSONS

Project Name:	Remedial Action Activities at the East Main/Wall Street Plume of the Rockaway Borough Well Field Superfund Site
Project Location:	Rockaway Borough, Morris County, NJ

CAPE has designated the personnel below to perform as competent persons on this project.

Competent Person Description	Applicability	Competent Person
General Safety and Health Provisions (29 CFR 1926 Subpart C)	Yes	SSHO (Robert Landle)
Occupational Health and Environmental Controls (29 CFR 1926 Subpart D)	Yes	SSHO (Robert Landle)
Personal Protective and Life Saving Equipment (29 CFR 1926 Subpart E)	Yes	SSHO (Robert Landle)
Fire Protection and Prevention (29 CFR 1926 Subpart F)	Yes	SSHO (Robert Landle)
Signs, Signals, and Barricades (29 CFR 1926 Subpart G)	Yes	SSHO (Robert Landle)
Rigging (29 CFR 1926 Subpart H)	Yes	SSHO (Robert Landle)
Hand and Power Tools (29 CFR 1926 Subpart I)	Yes	SSHO (Robert Landle)
Welding and Cutting (29 CFR 1926 Subpart J)	Yes	SSHO (Robert Landle)
Electrical (29 CFR 1926 Subpart K)	Yes	SSHO (Robert Landle)
Scaffolding (29 CFR 1926 Subpart L)	Yes	SSHO (Robert Landle)
Fall Protection (29 CFR 1926 Subpart M)	Yes	SSHO (Robert Landle)
Cranes, Derricks, Hoists, Elevators, and Conveyors (29 CFR 1926 Subpart N)	No	NA
Motor Vehicles, Mechanized Equipment and Marine Operations (29 CFR 1926 Subpart O)	Yes	SSHO (Robert Landle)
Excavations (29 CFR 1926 Subpart P)	Yes	SSHO (Robert Landle)
Concrete and Masonry (29 CFR 1926 Subpart Q)	Yes	SSHO (Robert Landle)
Steel Erection (29 CFR 1926 Subpart R)	No	NA
Underground Construction, Caissons, Cofferdams, and Compressed Air (29 CFR 1926 Subpart S)	No	NA
Demolition (29 CFR 1926 (Subpart T)	Yes	SSHO (Robert Landle)
Blasting and Use of Explosives (29 CFR 1926 Subpart U)	No	NA
Confined Spaces (29 CFR 1910.146)	No	NA
Other (Specify):		

ATTACHMENT 6

ACTIVITY HAZARD ANALYSES

ACTIVITY HAZARD ANALYSIS

ACTIVITY: MOBILIZATION AND SITE PREPARATION & SURVEYING

Accepted By:

Risk Assessment Code (RAC): **L**

Date Prepared: 12/03/10
Prepared By: Ken Beatty, CSP, CHST
Reviewed By: Charlie McNeil

E = Extremely High Risk
H = High Risk
M = Moderate Risk
L = Low Risk

Recommended Protective Clothing and Equipment: Use Level D protection for site preparation tasks.
Level D protection consists of: Hardhat, steel-toed boots, work gloves, safety glasses, high-visibility safety vest (if vehicle or equipment traffic), earplugs (if noise present.)

		PROBABILITY				
		Frequent	Likely	Occasional	Seldom	Unlikely
SEVERITY	Catastrophic	**E**	**E**	**H**	**H**	**M**
	Critical	**E**	**H**	**H**	**M**	**L**
	Marginal	**H**	**M**	**M**	**L**	**L**
	Negligible	**M**	**L**	**L**	**L**	**L**

LIST OF COMPETENT PERSONS FOR THIS AHA:
General S&H: SSHO (Robert Landle).

RISK ASSESSMENT DEFINITIONS:

SEVERITY	
Catastrophic:	Mission failure; death or permanent disabling injury; damage to property >$200K.
Critical:	Major mission degradation; severe injury; occupational illness; or major system damage.
Marginal:	Minor mission degradation; injury; minor occupational illness; or minor system damage.
Negligible:	Less than minor mission degradation; injury; occupational illness; or minor system damage.
PROBABILITY	
Frequent:	Occurs often in the life of a system. Continuously experienced.
Likely:	Occurs often in the life of a system. Continuously experienced.
Occasional:	Will occur in the life of the system. Occurs sporadically.
Seldom:	Unlikely but can expect to occur in the life of the system. Occurs seldom.
Unlikely:	Unlikely but could occur in the life of a system. Occurs very rarely.

ACTIVITY HAZARD ANALYSIS

WORK TASK	POTENTIAL HAZARDS
Mobilization and Site Preparation: -Mobilize personnel and equipment -Conduct safety orientation briefing/APP-SSHP review -Set-up lay down area, equipment and supply storage -Receive and inspect equipment -Conduct/review utility clearance -Surveying -Delineate work zones -Conduct minor grubbing (as necessary) -Set-up decontamination/staging areas -Complete other site preparation tasks.	**Chemical Hazards**: No anticipated exposure to chemical hazards during this activity. **Biological Hazards**: Potential exposure to poisonous plants, snakes, spiders, rodents, and insects. **Physical Hazards**: Potential exposure to physical hazards: Fire protection; overhead utilities; heavy equipment operation; material handling; tools, machinery, and equipment use; electrical equipment; noise exposure; heat stress; cold stress; inclement weather and adverse environmental conditions; miscellaneous physical hazards. **SEE RECOMMENDED HAZARD CONTROLS BELOW**.

RECOMMENDED HAZARD CONTROLS
Chemical Hazards: No expected exposure to chemical hazards during this activity. Observe for any chemical hazards. Advise the SSHO if chemical hazards are observed and the potential for contact exists.
Biological Hazards: Biological hazards may be present. Watch for, and avoid contact with, poisonous plants, snakes, spiders, rodents, and insects.
Fire Protection: Gasoline and diesel fuel will be used for vehicle and equipment operation. No hot work is expected. Require fire extinguishers for each location. Allow smoking only in designated areas.
Overhead Utilities: Overhead utilities may be present. Make sure delivered equipment is kept clear of overhead lines. Survey for overhead utilities before bringing equipment with high extensions (i.e., heavy equipment, dump truck, roll-off bin truck) into a work area. Do not operate equipment within 10-feet of overhead lines. Determine and comply with the required distance from energized overhead electric lines per EM 385-1-1 11F and Tables 11-1 and 11-3.
Heavy Equipment Operation: Heavy equipment will be delivered to the site and off-loaded. Use a spotter to assist during unloading of heavy equipment off of delivery trailers. Inspect heavy equipment daily and document. Check operation of backup alarms. Survey area for utilities prior to initiating excavation work. Have ground personnel wear high-visibility safety vests with reflective striping. Maintain positive contact between operator and ground personnel at all times. Use hand signals. Do not cross path of moving equipment or cross behind equipment. Position ground personnel out of heavy equipment operating area when possible. Require operators to look before backing.
Material Handling: Material handling involving lifting, and carrying will occur. Wear work gloves when handling materials. Watch for items that can cut, puncture, pinch, or crush. Use proper lifting technique: size up load, get help for heavy or awkward items, get good grasp on object to be lifted, keep load close to body, keep back straight, lift with legs not with back, and do not twist when lifting. Review material handling procedures during safety meetings.
Tools, Machinery and Equipment Use: Hand and power tools may be used. Use the proper tool for the job. Use GFCIs for power tool operation. Use safety glasses. Do not use damaged tools. Properly secure materials when working on them. Make sure area is adequately clear when using equipment. Inspect electrical cords.
Electrical Equipment: Generators may be used to provide electrical power. Use GFCIs for portable electrical equipment. Inspect electrical extension cords for damage and ground plugs. Keep electrical equipment/cords away from water and fuel materials.

Lockout/Tagout: Lockout/tagout procedures may be needed for repairs to heavy equipment and establishing site trailer utility services. Use lockout/tagout procedures for equipment repair and establishing utility services as needed. De-energize equipment and take measure of protect from release of stored energy. Turn off energy sources for equipment or disconnect. Lockout and tagout switches before servicing equipment. Lower parts of equipment and set on ground when possible or block equipment. Use standardized locks and tags to indicate the identity of the individual using them. Require each lockout/tagout device to be removed by the individual who applied the device.

Noise Exposure: Noise exposure above 85 dBA is expected when working near or operating machinery and equipment. Wear earplugs for protection.

Heat Stress: Heat stress may occur when elevated ambient temperatures, moderate to heavy workloads, and/or use of impermeable protective clothing occur. Adjust work-rest schedules as needed. Work at a steady pace. Drink plenty of fluids. Take rest breaks and use shaded rest area. Know the signs/symptoms of heat exposure and emergency treatment.

Cold Stress: Cold stress may occur during the fall/winter/spring months when decreased ambient temperatures are present. For cold stress prevention, minimize exposure to temperatures below 45˚F. Wear insulated clothing for cold temperature work. Know the signs/symptoms of cold exposure and emergency treatment. Drink adequate fluids.

Inclement Weather and Adverse Environmental Conditions: Inclement weather conditions such as strong winds, heavy rain or lightning, and snow may occur during outdoor operations. Establish designated take cover area. Suspend outdoor operations during inclement weather or when other adverse environmental conditions exist. In case of work stoppage due to lightning, stay under shelter 30 minutes after last show of lightning or sound of thunder clap. Work will not resume until an all-clear signal has been communicated by the SSHO to affected personnel.

Miscellaneous Physical Hazards: General safety hazards will be present during site tasks. Use PPE for head, eye, hand, foot, and body protection. Follow safe work practices. Watch for slip, trip, and fall hazards from uneven, wet, slippery ground surfaces. Keep ground areas clear of tripping hazards such as hoses, cords, boxes, and debris. Maintain good housekeeping. Look where walking. Maintain balance. Maintain three-point contact when stepping off equipment. Use short steps when walking on slippery surfaces. Communicate general safety information during safety meetings.

Site Emergencies: Preparation for site emergencies is always a requirement for site work. Set-up emergency communications. Prepare emergency supplies. Post emergency contact and hospital route information. Maintain emergency phone list/hospital location/route map on site. Have first-aid kit, fire extinguisher, and safety supplies available. Have cell phones available. Designate evacuation location and emergency signals. See the "Emergency Response Plan" section of SSHP.

EQUIPMENT TO BE USED	INSPECTION REQUIREMENTS	TRAINING REQUIREMENTS
Hand and power tools; Generator; Heavy equipment.	Safety inspection; Tool inspection; Heavy equipment inspection.	Site orientation briefing and APP/SSHP/AHA review; HazWOPER training; Lockout/tagout training; First-aid/CPR training (minimum two persons on site).

ACTIVITY HAZARD ANALYSIS

ACTIVITY: EXTRACTION WELL/MONITORING WELL INSTALLATION

Accepted By:

Risk Assessment Code (RAC): **M**

Date Prepared: 12/03/10
Prepared By: Ken Beatty, CSP, CHST
Reviewed By: Charlie McNeil

E = Extremely High Risk
H = High Risk
M = Moderate Risk
L = Low Risk

Recommended Protective Clothing and Equipment: Use Level D protection for set-up of traffic control equipment, establishing site work zones and decontamination stations and installation of locks on extraction and monitoring wells. Modified Level D protection may be necessary for installation of extraction wells and to pump, treat and discharge water.

Level D protection consists of: Hardhat, steel-toed boots, work gloves, safety glasses, high-visibility safety vest (if vehicle or equipment traffic), earplugs (if noise present). Modified Level D protection consists of: Level D protection plus chemical protective clothing (disposable coveralls, PVC or nitrile gloves, PVC boots or boot covers).

SEVERITY	PROBABILITY: Frequent	Likely	Occasional	Seldom	Unlikely
Catastrophic	**E**	**E**	**H**	**H**	**M**
Critical	**E**	**H**	**H**	**M**	**L**
Marginal	**H**	**M**	**M**	**L**	**L**
Negligible	**M**	**L**	**L**	**L**	**L**

LIST OF COMPETENT PERSONS FOR THIS AHA:
General S&H: SSHO (Robert Landle)
Fall Protection: SSHO (Robert Landle)
Fire Protection: SSHO (Robert Landle).

RISK ASSESSMENT DEFINITIONS:

SEVERITY	
Catastrophic:	Mission failure; death or permanent disabling injury; damage to property >$200K.
Critical:	Major mission degradation; severe injury; occupational illness; or major system damage.
Marginal:	Minor mission degradation; injury; minor occupational illness; or minor system damage.
Negligible:	Less than minor mission degradation; injury; occupational illness; or minor system damage.
PROBABILITY	
Frequent:	Occurs often in the life of a system. Continuously experienced.
Likely:	Occurs often in the life of a system. Continuously experienced.
Occasional:	Will occur in the life of the system. Occurs sporadically.
Seldom:	Unlikely but can expect to occur in the life of the system. Occurs seldom.
Unlikely:	Unlikely but could occur in the life of a system. Occurs very rarely.

ACTIVITY HAZARD ANALYSIS

WORK TASK	POTENTIAL HAZARDS
Extraction Well/Monitoring Well Installation: -Review utility clearance -Set-up traffic control equipment -Establish site work zone demarcation -Prepare decontamination station -Install extraction wells, install monitoring wells -Pump, treat and discharge water -Install locks on monitoring and extraction wells.	**Chemical Hazards**: Minor potential exposure to site low-level VOC concentrations (PPE, air monitoring). **Biological Hazards**: Potential exposure to poisonous plants, snakes, spiders, rodents, and insects. **Physical Hazards**: Potential exposure to physical hazards: Fire protection and hot work; overhead utilities; underground utilities; heavy equipment operation; elevated work locations and fall protection; vehicle and equipment traffic; material handling; tools, machinery, and equipment use; electrical equipment; noise exposure; heat stress; cold stress; drill rig safety; compressed gas cylinders; vacuum truck operation; pressure washer operation; inclement weather and adverse environmental conditions; miscellaneous physical hazards. **SEE RECOMMENDED HAZARD CONTROLS BELOW**.

RECOMMENDED HAZARD CONTROLS

Chemical Hazards: Minor potential for exposure to site contaminants during extraction and monitoring well installation and equipment decontamination. Use prescribed levels of protection described in the PPE section of the SSHP. Properly don and doff protective clothing. Avoid contact with contaminated surfaces when possible. Use prescribed decontamination measures.

Biological Hazards: Biological hazards may be present. Watch for, and avoid contact with, poisonous plants, snakes, spiders, rodents, and insects. Apply repellant containing 20% - 30% DEET if needed.

Fire Protection and Hot Work: Gasoline and/or diesel fuel will be used for vehicle operation. Hot work may be conducted. Require fire extinguishers for each site location. Allow smoking only in designated areas. Use hot work safety procedures, hot work permit and fire watch for hot work. OSHA-approved metal safety cans, painted red with a yellow stripe, that have self-closing lids and flame arrestors must be used to store small quantities of flammable liquids.

Overhead Utilities: Overhead utilities may be present. Keep heavy equipment away from overhead lines. Survey for overhead utilities before bringing equipment with high extensions (i.e., heavy equipment, dump truck, roll-off bin truck) into a work area. Do not operate equipment within 10-feet of overhead lines. Determine and comply with the required distance from energized overhead electric lines per EM 385-1-1 11F and Tables 11-1 and 11-3.

Underground Utilities: Underground utilities may be present. Review utility clearance information before conducting subsurface work. Coordinate utility clearance prior to digging. Review and inspect utility mark-outs before excavating. Hand dig in immediate vicinity of marked utilities. Immediately contact the Contracting Officer should damage to underground utilities or subsurface construction occur.

Heavy Equipment Operation: Heavy equipment will be used for extraction well/monitoring well installation. Inspect heavy equipment daily and document. Check operation of backup alarms. Survey area for utilities prior to initiating excavation work. Have ground personnel wear high-visibility safety vests with reflective striping. Maintain positive contact between operator and ground personnel at all times. Use hand signals. Do not cross path of moving equipment or cross behind equipment. Position ground personnel out of heavy equipment operating area when possible. Require operators to look before backing.

Elevated Work Locations and Fall Protection: Work at elevated locations may occur. Personal fall arrest systems (full body harness, shock-absorbing lanyard, anchorage point) will be used for fall protection for work where there is a fall hazard of 6 feet or more.

Vehicle and Equipment Traffic: Concurrent use of heavy equipment, vehicles, and ground personnel will occur. Establish traffic control procedures when there is vehicle, heavy equipment, and/or pedestrian traffic present. Have workers wear high-visibility safety vests with reflective striping when working near traffic areas. Advise workers to look carefully where they walk to avoid vehicles and moving equipment and to maintain eye contact with heavy equipment operators. Use traffic control devices as needed. Use spotters if needed for backing of equipment and vehicles into tight work areas.

Material Handling: Material handling involving lifting and carrying will occur. Wear work gloves when handling materials. Watch for items that can cut, puncture, pinch, or crush. Use proper lifting technique: size up load, get help for heavy or awkward items, get good grasp on object to be lifted, keep load close to body, keep back straight, lift with legs not with back, and do not twist when lifting. Review material handling procedures during safety meetings.
Tools, Machinery and Equipment Use: Hand tools will be used and power tools may be used. Use the proper tool for the job. Use GFCIs for power tool operation. Use safety glasses. Do not use damaged tools. Properly secure materials when working on them. Make sure area is adequately clear when using equipment. Inspect electrical cords.
Electrical Equipment: Generators may be used to provide electrical power. Use GFCIs for portable electrical equipment. Inspect electrical extension cords for damage and ground plugs. Keep electrical equipment/cords away from water and fuel materials. Use lockout/tagout procedures if needed.
Noise Exposure: Noise exposure above 85 dBA is expected when working near or operating machinery and equipment. Wear earplugs for protection.
Heat Stress: Heat stress may occur when elevated ambient temperatures, moderate to heavy workloads, and/or use of impermeable protective clothing occur. Adjust work-rest schedules as needed. Work at a steady pace. Drink plenty of fluids. Take rest breaks and use shaded rest area. Know the signs and symptoms of heat exposure and emergency treatment.
Cold Stress: Cold stress may occur during the fall/winter/spring months when decreased ambient temperatures are present. For cold stress prevention, minimize exposure to temperatures below 45˚F. Wear insulated clothing for cold temperature work. Know the signs/symptoms of cold exposure and emergency treatment. Drink adequate fluids.
Drill Rig Safety: Drill rig equipment will be used for extraction well/monitoring well installation. Check for above and below ground utilities before drilling. Do not operate drill rig within 10 feet of overhead lines. Inspect drilling equipment and test drill rig kill switch. Establish communication system between driller, helper, and others. Use proper handling and lifting techniques for material handling.
Compressed Gas Cylinders: Compressed gas cylinders will be used for hot work (if needed). Gas cylinders will be moved with caps installed, and stored upright and secured with rope of chain. Acetylene and oxygen cylinders must be stored a minimum of 20 feet away from each other or separated by a 5-foot fire rated wall.
Vacuum Truck Operation: A vacuum truck may be used to pump out liquids. Use PPE especially gloves and splash protection; use proper technique in handling hoses; ground vacuum truck during transfer of flammable or combustible liquids to prevent discharge of static electricity sparks; use hose on pump exhaust and direct away from the work area as needed; clear hoses and use bucket to prevent spills when disconnecting hoses.
Pressure Washer Operation: Pressure washer equipment may be used for equipment cleaning. Use gloves, face, and eye protection during pressure washer operation. Use metatarsal guards as necessary. Keep area clear when washing. Do not clean boots with pressure washer. Watch for slippery surfaces and handling of slippery materials. Have fire extinguisher and emergency eyewash supplies immediately available.
Inclement Weather and Adverse Environmental Conditions: Inclement weather conditions such as strong winds, heavy rain or lightning, and snow may occur during outdoor operations. Establish designated take cover area. Suspend outdoor operations during inclement weather or when other adverse environmental conditions exist. In case of work stoppage due to lightning, stay under shelter 30 minutes after last show of lightning or sound of thunder clap. Work will not resume until an all-clear signal has been communicated by the SSHO to affected personnel.
Miscellaneous Physical Hazards: General safety hazards will be present during all site tasks. Use PPE for head, eye, hand, foot, and body protection. Follow safe work practices. Watch for slip, trip, and fall hazards from uneven, wet, slippery ground surfaces. Keep ground areas clear of tripping hazards such as hoses, cords, boxes, and debris. Maintain good housekeeping. Look where walking. Maintain balance. Maintain three-point contact when stepping off equipment. Use short steps when walking on slippery surfaces. Communicate general safety information during safety meetings.
Site Emergencies: Preparation for site emergencies is always a requirement for site work. Set-up emergency communications. Prepare emergency supplies. Post emergency contact and hospital route information. Maintain emergency phone list/hospital location/route map on site. Have first-aid kit, fire extinguisher, and safety supplies available. Have cell phones available. Designate evacuation location and emergency signals. See the "Emergency Response Plan" section of SSHP.

EQUIPMENT TO BE USED	INSPECTION REQUIREMENTS	TRAINING REQUIREMENTS
Hand tools; Power tools; Generator; Heavy equipment; Decon solutions (detergent, nitric acid, deionized water); Hand sprayer; 5-gallon buckets; 55-gallon drum; Sample containers; Decon equipment; Pressure Washer; Trash pump; Vacuum Truck; Carbon-treatment unit; Fall protection gear (if climbing drill rig mast); Spill kit; Safety tote; PPE.	Safety inspection; Tool inspection; Heavy equipment inspection.	Site orientation briefing and APP/SSHP/AHA review; HAZWOPER training; Fall protection training; First-aid/CPR training (minimum two persons on site); Flagger training; Fire extinguisher training; PPE training; HAZCOM training; Lockout/tagout training

ACTIVITY HAZARD ANALYSIS

ACTIVITY: AQUIFER PUMP TESTING; GTS START-UP & PERFORMANCE TESTING

Accepted By:

Risk Assessment Code (RAC): **M**

Date Prepared: 12/03/10
Prepared By: Ken Beatty, CSP, CHST
Reviewed By: Charlie McNeil

E = Extremely High Risk
H = High Risk
M = Moderate Risk
L = Low Risk

Recommended Protective Clothing and Equipment: Use Level D protection for set-up and testing work tasks. Use Modified Level D protection if potential for contact with site contaminants exist.

Level D protection consists of: Hardhat, steel-toed boots, work gloves, safety glasses, high-visibility safety vest (if vehicle or equipment traffic), earplugs (if noise present). Modified Level D protection consists of: Level D protection plus chemical protective clothing (disposable coveralls, PVC or nitrile gloves, PVC boots or boot covers).

SEVERITY	PROBABILITY: Frequent	Likely	Occasional	Seldom	Unlikely
Catastrophic	**E**	**E**	**H**	**H**	**M**
Critical	**E**	**H**	**H**	**M**	**L**
Marginal	**H**	**M**	**M**	**L**	**L**
Negligible	**M**	**L**	**L**	**L**	**L**

LIST OF COMPETENT PERSONS FOR THIS AHA:
General S&H: SSHO (Robert Landle)
Fire Protection: SSHO (Robert Landle).

RISK ASSESSMENT DEFINITIONS:

SEVERITY	
Catastrophic:	Mission failure; death or permanent disabling injury; damage to property >$200K.
Critical:	Major mission degradation; severe injury; occupational illness; or major system damage.
Marginal:	Minor mission degradation; injury; minor occupational illness; or minor system damage.
Negligible:	Less than minor mission degradation; injury; occupational illness; or minor system damage.
PROBABILITY	
Frequent:	Occurs often in the life of a system. Continuously experienced.
Likely:	Occurs often in the life of a system. Continuously experienced.
Occasional:	Will occur in the life of the system. Occurs sporadically.
Seldom:	Unlikely but can expect to occur in the life of the system. Occurs seldom.
Unlikely:	Unlikely but could occur in the life of a system. Occurs very rarely.

ACTIVITY HAZARD ANALYSIS

WORK TASK	POTENTIAL HAZARDS
Aquifer Pump Testing, GTS Start-up and Performance Testing: -Baseline groundwater monitoring work tasks -Aquifer pump testing -GTS start-up testing -GTS performance testing	**Chemical Hazards**: Minor potential for exposure site low-level VOC concentrations. **Biological Hazards**: Potential exposure to poisonous plants, snakes, spiders, rodents, and insects. **Physical Hazards**: Potential exposure to physical hazards: Fire protection; material handling; tools, machinery, and equipment use; electrical equipment; noise exposure; heat stress; cold stress; lockout/tagout; inclement weather and adverse environmental conditions; miscellaneous physical hazards. **SEE RECOMMENDED HAZARD CONTROLS BELOW**.

RECOMMENDED HAZARD CONTROLS
Chemical Hazards: Minimal potential for exposure to site contaminants during Aquifer pump testing, GTS Start-up work tasks and GTS performance testing work activities. Use prescribed levels of protection described in the PPE section of the SSHP. Properly don and doff protective clothing. Avoid contact with contaminated surfaces when possible. Use prescribed decontamination measures.
Biological Hazards: Biological hazards may be present. Watch for, and avoid contact with, poisonous plants, snakes, spiders, rodents, and insects. Apply repellant containing 20% - 30% DEET if needed.
Fire Protection: Gasoline and diesel fuel will be used for equipment operation. No hot work is expected. Require fire extinguishers for each site location. Allow smoking only in designated areas.
Material Handling: Material handling involving lifting and carrying will occur. Wear work gloves when handling materials. Watch for items that can cut, puncture, pinch, or crush. Use proper lifting technique: size up load, get help for heavy or awkward items, get good grasp on object to be lifted, keep load close to body, keep back straight, lift with legs not with back, and do not twist when lifting. Review material handling procedures during safety meetings.
Tools, Machinery and Equipment Use: Hand tools will be used and power tools may be used. Use the proper tool for the job. Use GFCIs for power tool operation. Use safety glasses. Do not use damaged tools. Properly secure materials when working on them. Make sure area is adequately clear when using equipment. Inspect electrical cords.
Electrical Equipment: Generators may be used to provide electrical power. Use GFCIs for portable electrical equipment. Inspect electrical extension cords for damage and ground plugs. Keep electrical equipment/cords away from water and fuel materials. Use lockout/tagout procedures.
Noise Exposure: Noise exposure above 85 dBA is expected when working near or operating machinery and equipment. Wear earplugs for protection.
Heat Stress: Heat stress may occur when elevated ambient temperatures, moderate to heavy workloads, and/or use of impermeable protective clothing occur. Adjust work-rest schedules as needed. Work at a steady pace. Drink plenty of fluids. Take rest breaks and use shaded rest area. Know the signs/symptoms of heat exposure and emergency treatment.
Cold Stress: Cold stress may occur during the fall/winter/spring months when decreased ambient temperatures are present. For cold stress prevention, minimize exposure to temperatures below 45˚F. Wear insulated clothing for cold temperature work. Know the signs/symptoms of cold exposure and emergency treatment. Drink adequate fluids.
Lockout/Tagout: Lockout/tagout procedures may be needed during initial start-up and site testing work activities. Use lockout/tagout procedures for equipment repair and establishing utility services as needed. De-energize equipment and take measure of protect from release of stored energy. Turn off energy sources for equipment or disconnect. Lockout and tagout switches before servicing equipment. Lower parts of equipment and set on ground when possible or block equipment. Use standardized locks and tags to indicate the identity of the individual using them. Require each lockout/tagout device to be removed by the individual who applied the device.

Inclement Weather and Adverse Environmental Conditions: Inclement weather conditions such as strong winds, heavy rain or lightning, and snow may occur during outdoor operations. Establish designated take cover area. Suspend outdoor operations during inclement weather or when other adverse environmental conditions exist. In case of work stoppage due to lightning, stay under shelter 30 minutes after last show of lightning or sound of thunder clap. Work will not resume until an all-clear signal has been communicated by the SSHO to affected personnel. Use decontamination procedures, as necessary, to remove bird or rodent excreta.		
Miscellaneous Physical Hazards: General safety hazards will be present during all site tasks. Use PPE for head, eye, hand, foot, and body protection. Follow safe work practices. Watch for slip, trip, and fall hazards from uneven, wet, slippery ground surfaces. Keep ground areas clear of tripping hazards such as hoses, cords, boxes, and debris. Maintain good housekeeping. Look where walking. Maintain balance. Maintain three-point contact when stepping off equipment. Use short steps when walking on slippery surfaces. Communicate general safety information during safety meetings.		
Site Emergencies: Preparation for site emergencies is always a requirement for site work. Set-up emergency communications. Prepare emergency supplies. Post emergency contact and hospital route information. Maintain emergency phone list/hospital location/route map on site. Have first-aid kit, fire extinguisher, and safety supplies available. Have cell phones available. Designate evacuation location and emergency signals. See the "Emergency Response Plan" section of SSHP.		
EQUIPMENT TO BE USED	**INSPECTION REQUIREMENTS**	**TRAINING REQUIREMENTS**
Hand and power tools; GPS unit; Sampling equipment; Decon solutions (detergent, nitric acid, deionized water); Hand sprayer; 5-gallon buckets; Sample containers; Spill kit; Safety tote; PPE.	Safety inspection; Tool inspection.	Site orientation briefing and APP/SSHP/AHA review; HazWOPER training (site personnel); First-aid/CPR training (minimum two persons on site).

ACTIVITY HAZARD ANALYSIS

ACTIVITY: MONITORING WELL AND BORING ABANDONMENT

Accepted By:

Risk Assessment Code (RAC): **M**

Date Prepared: 12/03/10
Prepared By: Ken Beatty, CSP, CHST
Reviewed By: Charlie McNeil

E = Extremely High Risk
H = High Risk
M = Moderate Risk
L = Low Risk

Recommended Protective Clothing and Equipment: Use Level D protection for set-up and monitoring well and boring abandonment activities. Modified Level D protection may be necessary if potential for contact with contaminated surfaces exist.

Level D protection consists of: Hardhat, steel-toed boots, work gloves, safety glasses, high-visibility safety vest (if vehicle or equipment traffic), earplugs (if noise present). Modified Level D protection consists of: Level D protection plus chemical protective clothing (disposable coveralls, PVC or nitrile gloves, PVC boots or boot covers).

		PROBABILITY				
		Frequent	Likely	Occasional	Seldom	Unlikely
SEVERITY	Catastrophic	**E**	**E**	**H**	**H**	**M**
	Critical	**E**	**H**	**H**	**M**	**L**
	Marginal	**H**	**M**	**M**	**L**	**L**
	Negligible	**M**	**L**	**L**	**L**	**L**

LIST OF COMPETENT PERSONS FOR THIS AHA:
-General S&H: SSHO (Robert Landle)
-Fire Protection: SSHO (Robert Landle).

RISK ASSESSMENT DEFINITIONS:

SEVERITY	
Catastrophic:	Mission failure; death or permanent disabling injury; damage to property >$200K.
Critical:	Major mission degradation; severe injury; occupational illness; or major system damage.
Marginal:	Minor mission degradation; injury; minor occupational illness; or minor system damage.
Negligible:	Less than minor mission degradation; injury; occupational illness; or minor system damage.
PROBABILITY	
Frequent:	Occurs often in the life of a system. Continuously experienced.
Likely:	Occurs often in the life of a system. Continuously experienced.
Occasional:	Will occur in the life of the system. Occurs sporadically.
Seldom:	Unlikely but can expect to occur in the life of the system. Occurs seldom.
Unlikely:	Unlikely but could occur in the life of a system. Occurs very rarely.

ACTIVITY HAZARD ANALYSIS

WORK TASK	POTENTIAL HAZARDS
Monitoring Well and Boring Abandonment: -Abandon monitoring wells.	**Chemical Hazards**: Minor potential for exposure to low-level VOC concentrations (PPE, air monitoring). **Biological Hazards**: Potential exposure to poisonous snakes, spiders, rodents, ants, bees, and mosquitoes. **Physical Hazards**: Potential exposure to physical hazards: Fire protection and hot work; overhead utilities; underground utilities; heavy equipment operation; vehicle and equipment traffic; material handling; tools, machinery, and equipment use; electrical equipment; lockout/tagout; noise exposure; heat stress; cold stress; forklift operation; compressed gas cylinder safety; ladder safety; elevated work locations and fall protection; hoisting and rigging; power saw operation; inclement weather and adverse environmental conditions; miscellaneous physical hazards. **SEE RECOMMENDED HAZARD CONTROLS BELOW**.

RECOMMENDED HAZARD CONTROLS
Chemical Hazards: Minimal potential for exposure to site contaminants during this activity. Use prescribed levels of protection described in the PPE section of the SSHP. Properly don and doff protective clothing. Avoid contact with contaminated surfaces when possible. Use prescribed decontamination measures.
Biological Hazards: Biological hazards may be present in work areas. Watch for, and avoid contact with, poisonous snakes, spiders, rodents, ants, bees, and mosquitoes. Apply repellant containing 20% - 30% DEET if needed.
Fire Protection and Hot Work: Gasoline and diesel fuel will be used for vehicles and machinery operation. Hot work may be needed. Require fire extinguishers for each site location. Allow smoking only in designated areas. OSHA-approved metal safety cans, painted red with a yellow stripe, that have self-closing lids and flame arrestors must be used to store small quantities of flammable liquids. Hot work is prohibited in areas where flammable materials or equipment containing flammable materials may be present. Follow hot work safety procedures including the use of a hot work permit and fire watch for hot work.
Overhead Utilities: Overhead utilities may be present. Survey for overhead utilities before bringing equipment with high extensions (heavy equipment, dump trucks, roll-off bin truck) into a work area. Do not operate equipment within 10-feet of overhead lines. Determine/comply with the required distance from energized overhead electric lines per EM 385-1-1 11E and Tables 11-1 and 11-3. De-energize and/or use engineering controls for protection.
Underground Utilities: Underground utilities may be present. Obtain a dig permit before any ground disturbance. Obtain and review base utility map. Marked locations of existing utilities will be approximate. Contact a utility locator to mark-out underground utilities in the work area. Complete utility clearance before subsurface work. Review and inspect utility mark-outs before excavating. If utilities are indicated in an area to be excavated, hand dig (or pot hole by air knife or water injection) two feet on either side of the marked utility to locate it. De-energize and/or use engineering controls for protection.
Heavy Equipment Operation: Heavy equipment may be used for abandonment activities. Inspect heavy equipment. Check backup alarms. Survey for utilities. Have ground personnel wear high-visibility safety vests. Maintain positive contact between operator and ground personnel. Use hand signals. Do not cross path of moving equipment or walk behind equipment. Keep out of heavy equipment operating area when possible. Require operators to look before backing. Maintain dust control. Place bucket on the ground for equipment shut down.
Vehicle and Mobile Equipment Traffic: Concurrent use of mobile equipment, vehicles, and ground personnel will occur. Establish traffic control procedures. Have workers wear high-visibility safety vests in traffic areas. Have workers look where they walk to avoid moving vehicles and equipment. Maintain eye contact with equipment operators. Use traffic control devices. Use spotters for backing into tight work areas. For driver safety: Wear seat belts. Observe posted speeds and traffic signs. Keep load secure. Wear required PPE. Check overhead clearance from utilities. Set brakes and use chocks on an incline.
Material Handling: Material handling involving lifting and carrying will occur. Wear work gloves when handling materials. Watch for items that can cut, puncture, pinch, or crush. Use proper lifting technique: size up load, get help for heavy or awkward items, get good grasp on object to be lifted, keep load close to body, keep back straight, lift with legs not with back, and do not twist when lifting. Review material handling procedures during safety meetings.

Tools, Machinery and Equipment Use: Hand tools will be used and power tools will be used. Use the proper tool for the job. Use GFCIs for power tool operation. Use safety glasses. Do not use damaged tools. Properly secure materials when working on them. Make sure area is adequately clear when using equipment. Inspect electrical cords.
Electrical Equipment: Fuel-powered generators may be used to provide electrical power on site. Use qualified electrical subcontractor to perform electrical work. Personnel must use GFCIs in conjunction with portable electric tools or other equipment connected to electrical extension cords. An assured equipment grounding conductor program must be implemented if GFCIs are not exclusively used. Portable electric tools must not be lifted or lowered by their power cord. The plugs must not be altered or used incorrectly (such as the addition of non-grounded plug adapters). Electrical equipment cords should be kept coiled when not in use. When electrical equipment is in use, cords should be protected and positioned to avoid being run over by vehicles or equipment. Inspect electrical extension cords for damage and ground plugs. Keep electrical equipment/cords away from water and fuel materials.
Lockout/Tagout: LOTO may be required. De-energize equipment and take measures to protect from release of stored energy. Turn off energy sources for equipment or disconnect. LOTO switches before servicing equipment. Lower parts of equipment and set on ground when possible or block equipment. Use standardized locks and tags to indicate the identity of the individual using them. Require each LOTO device to be removed by the individual who applied the device.
Noise Exposure: Hazard from noise exposure (hearing damage) during power tool and equipment operation. Wear earplugs when operating or working near operating machinery or equipment.
Heat Stress: Heat stress may occur when elevated ambient temperatures, moderate to heavy workloads, and/or use of impermeable protective clothing occur. Adjust work-rest schedules as needed. Work at a steady pace. Drink plenty of fluids. Take rest breaks and use shaded rest area. Know the signs and symptoms of heat exposure and emergency treatment.
Cold Stress: Cold stress may occur during the fall/winter/spring months when decreased ambient temperatures are present. For cold stress prevention, minimize exposure to temperatures below 45˚F. Wear insulated clothing for cold temperature work. Know the signs/symptoms of cold exposure and emergency treatment.
Forklift Operation: A forklift may be used to load and off load materials. Inspect forklift daily. Check for backup alarms. Use experienced and trained operators. Have personnel maintain eye contact with forklift operators. Do not allow ground personnel to cross the path of forklift. Keep forks lowered and travel at safe speeds.
Compressed Gas Cylinder Safety: Compressed gas cylinders may be used if hot work is conducted. Move gas cylinders with caps installed. Make sure cylinder valves are securely closed and leak-free when not in use. Store cylinders upright and secure with chain. Maintain a minimum 20-foot between oxygen and acetylene cylinders in storage.
Ladder Safety: Ladders may be needed to access work areas. Do not stand on top two rungs of a ladder. Do not use metal ladders around electrical equipment. Have ladder extend at least 3 feet above elevated landings. Do not lean outward from ladder. Tie off extension ladders to secure.
Elevated Work Locations and Fall Protection: Work at elevated locations may occur. Personal fall arrest systems (full body harness, shock-absorbing lanyard, anchorage point) will be used for fall protection for work where there is a fall hazard of 6 feet or more.
Hoisting and Rigging: Hoisting and rigging may be needed. Require that operators know capacities and operating characteristics and limits of equipment. Know weight of load and do not load beyond manufacturer's load rating. Inspect slings and other hoisting and rigging equipment for damage before and during use. Use tag lines. Use standard hand signals or verbal commands from a signal person. Do not allow loads above personnel. Do not allow persons in the swing radius of rotating equipment.
Power Saw Operation: Power saw equipment will be used. Use eye and face protection. Ensure that operators know the proper operation of the saw. Do not allow saws to be operated with one hand or used at a height above chest level. Keep work areas clear of unnecessary personnel.
Inclement Weather and Adverse Environmental Conditions: Inclement weather conditions such as snow, strong winds, heavy rain, or lightning may occur during outdoor operations. Suspend outdoor operations during inclement weather or when other adverse environmental conditions exist.
Miscellaneous Physical Hazards: General safety hazards will be present during all site tasks. Use PPE for head, eye, hand, foot, and body protection. Follow safe work practices. Watch for slip, trip, and fall hazards from uneven, wet, slippery ground surfaces. Keep ground areas clear of tripping hazards such as hoses, cords, boxes, and debris. Maintain good housekeeping. Look where walking. Maintain balance. Maintain three-point contact when stepping off equipment. Use short steps when walking on slippery surfaces. Communicate general safety information during safety meetings.

ACTIVITY HAZARD ANALYSIS

PPE: Use prescribed levels of protection described in the PPE section of the SSHP for the applicable work task. Hardhat, steel-toed boots, work gloves, safety glasses, face shield (grinding, cutting, and pressure washing); high-visibility safety vest (if vehicle or equipment traffic), and earplugs (if noise present). Use personal fall arrest systems (full-body harness, shock-absorbing lanyard, anchorage point) for activities at elevated work locations with a fall hazard of six-feet or more. Wear PVC work gloves when handling concrete. Wear PVC or rubber boots if on wet concrete. Note: Welders will use leather gloves and a welding hood or goggles with filtered lenses for welding and torch cutting. A welding jacket (and chaps if leg exposure hazard) will additionally be used where there is a hazard of flying sparks and slag.		
Site Emergencies: Preparation for site emergencies is always a requirement for site work. Set-up emergency communications. Prepare emergency supplies. Post emergency contact and hospital route information. Maintain emergency phone list/hospital location/route map on site. Have first-aid kit, fire extinguisher, and safety supplies available. Have cell phones available. Designate evacuation location and emergency signals. See the "Emergency Response Plan" section of SSHP.		
EQUIPMENT TO BE USED	**INSPECTION REQUIREMENTS**	**TRAINING REQUIREMENTS**
Hand and power tools; Generator; Compressor; Heavy equipment; Drill rig; Jackhammer; Forklift; Roll-off bins; Slings; Shackles; Power saws; Pressure Washer; Spill kit; Safety tote; PPE.	Hot work permit (if hot work conducted; Safety inspection; Tool inspection; Heavy equipment inspection; Forklift inspection.	Site orientation briefing and SSHP/AHA review; HAZWOPER training; First-aid/CPR training (minimum two persons on site); Forklift training (operator); Fall protection training (site personnel).

ACTIVITY HAZARD ANALYSIS

ACTIVITY: GTS PIPE TRENCHING AND INSTALLATION; WATER SUPPLY PIPING

Accepted By:

Risk Assessment Code (RAC): **M**

Date Prepared: 12/03/10
Prepared By: Ken Beatty, CSP, CHST
Reviewed By: Charlie McNeil

E = Extremely High Risk
H = High Risk
M = Moderate Risk
L = Low Risk

Recommended Protective Clothing and Equipment: Use Level D protection for set-up, GTS pipe trenching, GTS pipe installation and GTS water supply piping installation. Use Modified Level D protection if potential for contact with site contaminants exist.

Level D protection consists of: Hardhat, steel-toed boots, work gloves, safety glasses, high-visibility safety vest (if vehicle or equipment traffic), earplugs (if noise present). Modified Level D protection consists of: Level D protection plus chemical protective clothing (disposable coveralls, PVC or nitrile gloves, PVC boots or boot covers).

SEVERITY	PROBABILITY: Frequent	Likely	Occasional	Seldom	Unlikely
Catastrophic	**E**	**E**	**H**	**H**	**M**
Critical	**E**	**H**	**H**	**M**	**L**
Marginal	**H**	**M**	**M**	**L**	**L**
Negligible	**M**	**L**	**L**	**L**	**L**

LIST OF COMPETENT PERSONS FOR THIS AHA:
General S&H: SSHO (Robert Landle)
Excavation CP: SSHO (Robert Landle)
Fire Protection: SSHO (Robert Landle).

RISK ASSESSMENT DEFINITIONS:

SEVERITY	
Catastrophic:	Mission failure; death or permanent disabling injury; damage to property >$200K.
Critical:	Major mission degradation; severe injury; occupational illness; or major system damage.
Marginal:	Minor mission degradation; injury; minor occupational illness; or minor system damage.
Negligible:	Less than minor mission degradation; injury; occupational illness; or minor system damage.
PROBABILITY	
Frequent:	Occurs often in the life of a system. Continuously experienced.
Likely:	Occurs often in the life of a system. Continuously experienced.
Occasional:	Will occur in the life of the system. Occurs sporadically.
Seldom:	Unlikely but can expect to occur in the life of the system. Occurs seldom.
Unlikely:	Unlikely but could occur in the life of a system. Occurs very rarely.

ACTIVITY HAZARD ANALYSIS

WORK TASK	POTENTIAL HAZARDS
GTS Trenching and Pipe Installation and Water Supply Piping: -Excavation and trenching -GTS Piping installation -GTS water supply piping installation -Pipe leak testing -Well vault installation.	**Chemical Hazards**: Potential exposure to VOCs during excavation and piping installation work activities. **Biological Hazards**: Potential exposure to poisonous plants, snakes, spiders, rodents, and insects. **Physical Hazards**: Potential exposure to physical hazards: Fire protection; overhead utilities; underground utilities; excavation and trench safety; heavy equipment operation; vehicle and equipment traffic; material handling; tools, machinery, and equipment use; electrical equipment; noise exposure; heat stress; cold stress; hoisting and rigging; power saw operation; inclement weather and adverse environmental conditions; miscellaneous physical hazards. **SEE RECOMMENDED HAZARD CONTROLS BELOW**.

RECOMMENDED HAZARD CONTROLS
Chemical Hazards: Potential for exposure to site contaminants during excavation of soils, piping installation and equipment decontamination. Use prescribed levels of protection described in the PPE section of the SSHP. Properly don and doff protective clothing. Avoid contact with contaminated surfaces when possible. Use prescribed decontamination measures.
Biological Hazards: Biological hazards may be present. Watch for, and avoid contact with, poisonous plants, snakes, spiders, rodents, and insects. Apply repellant containing 20% - 30% DEET if needed.
Fire Protection: Gasoline and diesel fuel will be used for equipment operation. No hot work is expected. Require fire extinguishers for each site location. Allow smoking only in designated areas.
Overhead Utilities: Overhead utilities may be present. Keep heavy equipment away from overhead lines. Survey for overhead utilities before bringing equipment with high extensions (i.e., heavy equipment, dump truck, roll-off bin truck) into a work area. Do not operate equipment within 10-feet of overhead lines. Determine and comply with the required distance from energized overhead electric lines per EM 385-1-1 11F and Tables 11-1 and 11-3.
Underground Utilities: Underground utilities may be present. Review utility clearance information before conducting subsurface work. Coordinate utility clearance prior to digging. Review and inspect utility mark-outs before excavating. Hand dig in immediate vicinity of marked utilities. Immediately contact the Contracting Officer should damage to underground utilities or subsurface construction occur.
Excavation and Trench Safety: Excavation operations may involve personnel entry into trenches or excavations greater than 4 feet in depth. Complete excavation entry operations according to OSHA requirements if entry into trenches 4 feet or more in depth or excavations 5 feet or more in depth. Check for underground utilities before excavation. Survey for overhead utilities before bringing equipment with high extensions (heavy equipment) into a work area. Do not operate equipment within 10 feet of overhead lines. For excavation entry operations, have a "Competent Person" supervise operations, conduct daily inspections, and implement protective systems for excavation operations (sloping, benching, shielding, and/or shoring).
Heavy Equipment Operation: Heavy equipment will be used for excavation and piping installation. Inspect heavy equipment daily and document. Check operation of backup alarms. Survey area for utilities prior to initiating excavation work. Have ground personnel wear high-visibility safety vests with reflective striping. Maintain positive contact between operator and ground personnel at all times. Use hand signals. Do not cross path of moving equipment or cross behind equipment. Position ground personnel out of heavy equipment operating area when possible. Require operators to look before backing.
Vehicle and Equipment Traffic: Concurrent use of heavy equipment, vehicles, and ground personnel will occur. Establish traffic control procedures when there is vehicle, heavy equipment, and/or pedestrian traffic present. Have workers wear high-visibility safety vests with reflective striping when working near traffic areas. Advise workers to look carefully where they walk to avoid vehicles and moving equipment and to maintain eye contact with heavy equipment operators. Use traffic control devices as needed. Use spotters if needed for backing of equipment and vehicles into tight work areas.

Material Handling: Material handling involving lifting and carrying will occur. Wear work gloves when handling materials. Watch for items that can cut, puncture, pinch, or crush. Use proper lifting technique: size up load, get help for heavy or awkward items, get good grasp on object to be lifted, keep load close to body, keep back straight, lift with legs not with back, and do not twist when lifting. Review material handling procedures during safety meetings.

Tools, Machinery and Equipment Use: Hand tools will be used and power tools may be used. Use the proper tool for the job. Use GFCIs for power tool operation. Use safety glasses. Do not use damaged tools. Properly secure materials when working on them. Make sure area is adequately clear when using equipment. Inspect electrical cords.

Electrical Equipment: Generators may be used to provide electrical power. Use GFCIs for portable electrical equipment. Inspect electrical extension cords for damage and ground plugs. Keep electrical equipment/cords away from water and fuel materials. Use lockout/tagout procedures.

Noise Exposure: Noise exposure above 85 dBA is expected when working near or operating machinery and equipment. Wear earplugs for protection.

Heat Stress: Heat stress may occur when elevated ambient temperatures, moderate to heavy workloads, and/or use of impermeable protective clothing occur. Adjust work-rest schedules as needed. Work at a steady pace. Drink plenty of fluids. Take rest breaks and use shaded rest area. Know the signs/symptoms of heat exposure and emergency treatment.

Cold Stress: Cold stress may occur during the fall/winter/spring months when decreased ambient temperatures are present. For cold stress prevention, minimize exposure to temperatures below 45˚F. Wear insulated clothing for cold temperature work. Know the signs/symptoms of cold exposure and emergency treatment. Drink adequate fluids.

Hoisting and Rigging: Hoisting and rigging will occur. Require that operators know capacities and operating characteristics and limits of equipment. Know weight of load and do not load beyond manufacturer's load rating. Inspect slings and other hoisting and rigging equipment for damage before and during use. Use tag lines. Use standard hand signals or verbal commands from a signal person. Do not allow loads above personnel. Do not allow persons in the swing radius of rotating equipment.

Power Saw Operation: Power saw equipment may be used. Use eye and face protection. Ensure that operators know the proper operation of the saw. Do not allow saws to be operated with one hand or used at a height above chest level. Keep work areas clear of unnecessary personnel.

Inclement Weather and Adverse Environmental Conditions: Inclement weather conditions such as strong winds, heavy rain or lightning, and snow may occur during outdoor operations. Establish designated take cover area. Suspend outdoor operations during inclement weather or when other adverse environmental conditions exist. In case of work stoppage due to lightning, stay under shelter 30 minutes after last show of lightning or sound of thunder clap. Work will not resume until an all-clear signal has been communicated by the SSHO to affected personnel. Use decontamination procedures, as necessary, to remove bird or rodent excreta.

Miscellaneous Physical Hazards: General safety hazards will be present during all site tasks. Use PPE for head, eye, hand, foot, and body protection. Follow safe work practices. Watch for slip, trip, and fall hazards from uneven, wet, slippery ground surfaces. Keep ground areas clear of tripping hazards such as hoses, cords, boxes, and debris. Maintain good housekeeping. Look where walking. Maintain balance. Maintain three-point contact when stepping off equipment. Use short steps when walking on slippery surfaces. Communicate general safety information during safety meetings.

Site Emergencies: Preparation for site emergencies is always a requirement for site work. Set-up emergency communications. Prepare emergency supplies. Post emergency contact and hospital route information. Maintain emergency phone list/hospital location/route map on site. Have first-aid kit, fire extinguisher, and safety supplies available. Have cell phones available. Designate evacuation location and emergency signals. See the "Emergency Response Plan" section of SSHP.

EQUIPMENT TO BE USED	INSPECTION REQUIREMENTS	TRAINING REQUIREMENTS
Hand and power tools; Generator; Heavy equipment; Dump trucks; Water truck; PPE.	Safety inspection; Tool inspection; Heavy equipment inspection Excavation inspection.	Site orientation briefing and APP/SSHP/AHA review; HAZWOPER training (site personnel); First-aid/CPR training (minimum two persons on site); Excavation Safety training.

ACTIVITY HAZARD ANALYSIS

ACTIVITY: BUILDING DEMOLITION (Including ACM/Lead Abatement)

Accepted By:

Risk Assessment Code (RAC): **M**

Date Prepared: 12/03/10
Prepared By: Ken Beatty, CSP, CHST
Reviewed By: Charlie McNeil

E = Extremely High Risk
H = High Risk
M = Moderate Risk
L = Low Risk

Recommended Protective Clothing and Equipment: Use Level D protection for general building demolition work activities. Use Modified Level D protection or Level C protection if elevated airborne dust concentrations levels are anticipated.
Level D protection consists of: Hardhat, steel-toed boots, work gloves, safety glasses, high-visibility safety vest (if vehicle or equipment traffic), earplugs (if noise present).
Modified Level D protection consists of: Level D protection plus chemical protective clothing (disposable coveralls, PVC or nitrile gloves, PVC boots or boot covers).
Level C protection consists of: Modified Level D protection plus an Air Purifying Respirator
-The project Asbestos Hazard Abatement Plan and Lead Hazard Control Plan prescribe PPE requirements for ACM and Lead Abatement and removal activities.

SEVERITY	PROBABILITY				
	Frequent	Likely	Occasional	Seldom	Unlikely
Catastrophic	**E**	**E**	**H**	**H**	**M**
Critical	**E**	**H**	**H**	**M**	**L**
Marginal	**H**	**M**	**M**	**L**	**L**
Negligible	**M**	**L**	**L**	**L**	**L**

LIST OF COMPETENT PERSONS FOR THIS AHA:
-General S&H: SSHO (Robert Landle)
-Fire Protection: SSHO (Robert Landle)
-Fall Protection: SSHO (Robert Landle)
-Asbestos-Containing Material (ACM) and Lead Abatement: (Subcontractor)

RISK ASSESSMENT DEFINITIONS:

SEVERITY	
Catastrophic:	Mission failure; death or permanent disabling injury; damage to property >$200K.
Critical:	Major mission degradation; severe injury; occupational illness; or major system damage.
Marginal:	Minor mission degradation; injury; minor occupational illness; or minor system damage.
Negligible:	Less than minor mission degradation; injury; occupational illness; or minor system damage.
PROBABILITY	
Frequent:	Occurs often in the life of a system. Continuously experienced.
Likely:	Occurs often in the life of a system. Continuously experienced.
Occasional:	Will occur in the life of the system. Occurs sporadically.
Seldom:	Unlikely but can expect to occur in the life of the system. Occurs seldom.
Unlikely:	Unlikely but could occur in the life of a system. Occurs very rarely.

ACTIVITY HAZARD ANALYSIS

WORK TASK	POTENTIAL HAZARDS
Building Demolition: -Use trained workers for hazardous and regulated material removal -Establish regulated material work area removal controls -Remediate and clean-up remediation work areas -Demolition and removal of structures and associated components -Staging and stockpiling of all waste debris -Transport and dispose of waste materials	**Chemical Hazards**: Potential hazard of exposure to asbestos (abatement), lead (abatement) and airborne dust (demolition). **Biological Hazards**: Potential exposure to poisonous snakes, spiders, rodents, ants, bees, and mosquitoes. **Physical Hazards**: Potential exposure to physical hazards: Fire protection and hot work; overhead utilities; underground utilities; heavy equipment operation; vehicle and equipment traffic; material handling; tools, machinery, and equipment use; electrical equipment; lockout/tagout; noise exposure; heat stress; cold stress; compressed gas cylinder safety; ladder safety; elevated work locations and fall protection; hoisting and rigging; power saw operation; aerial lift operation; pressure washer operation; inclement weather and adverse environmental conditions; miscellaneous physical hazards. **SEE RECOMMENDED HAZARD CONTROLS BELOW**.

RECOMMENDED HAZARD CONTROLS
Chemical Hazards: Possible exposure to asbestos and lead during building abatement work tasks. Possible exposure to airborne dust during demolition activities. Follow Asbestos Hazard Abatement Plan (AHAP) and Lead Hazard Compliance Plan (LHCP) requirements during abatement work tasks. Use dust control measures (water spray application) to minimize dust during demolition and other dust generating activities. Use prescribed levels of protection described in the PPE section of the AHAP, LHCP and SSHP for the applicable work task.
Biological Hazards: Biological hazards may be present in work areas. Watch for, and avoid contact with, poisonous snakes, spiders, rodents, ants, bees, and mosquitoes. Apply repellant containing 20% - 30% DEET if needed.
Fire Protection and Hot Work: Gasoline and diesel fuel will be used for vehicles and machinery operation. Hot work may be needed. Require fire extinguishers for each site location. Allow smoking only in designated areas. OSHA-approved metal safety cans, painted red with a yellow stripe, that have self-closing lids and flame arrestors must be used to store small quantities of flammable liquids. Hot work is prohibited in areas where flammable materials or equipment containing flammable materials may be present. Follow hot work safety procedures including the use of a hot work permit and fire watch for hot work.
Overhead Utilities: Overhead utilities may be present. Survey for overhead utilities before bringing equipment with high extensions (heavy equipment, dump trucks, roll-off bin truck) into a work area. Do not operate equipment within 10-feet of overhead lines. Determine/comply with the required distance from energized overhead electric lines per EM 385-1-1 11E and Tables 11-1 and 11-3. De-energize and/or use engineering controls for protection.
Underground Utilities: Underground utilities may be present. Obtain a dig permit before any ground disturbance. Obtain and review base utility map. Marked locations of existing utilities will be approximate. Contact a utility locator to mark-out underground utilities in the work area. Complete utility clearance before subsurface work. Review and inspect utility mark-outs before excavating. If utilities are indicated in an area to be excavated, hand dig (or pot hole by air knife or water injection) two feet on either side of the marked utility to locate it. De-energize and/or use engineering controls for protection.
Heavy Equipment Operation: Heavy equipment may be used for demolition activities. Inspect heavy equipment. Check backup alarms. Survey for utilities. Have ground personnel wear high-visibility safety vests. Maintain positive contact between operator and ground personnel. Use hand signals. Do not cross path of moving equipment or walk behind equipment. Keep out of heavy equipment operating area when possible. Require operators to look before backing. Maintain dust control. Place bucket on the ground for equipment shut down.

Vehicle and Mobile Equipment Traffic: Concurrent use of mobile equipment, vehicles, and ground personnel will occur. Establish traffic control procedures. Have workers wear high-visibility safety vests in traffic areas. Have workers look where they walk to avoid moving vehicles and equipment. Maintain eye contact with equipment operators. Use traffic control devices. Use spotters for backing into tight work areas. For driver safety: Wear seat belts. Observe posted speeds and traffic signs. Keep load secure. Wear required PPE. Check overhead clearance from utilities. Set brakes and use chocks on an incline.
Material Handling: Material handling involving lifting and carrying will occur. Wear work gloves when handling materials. Watch for items that can cut, puncture, pinch, or crush. Use proper lifting technique: size up load, get help for heavy or awkward items, get good grasp on object to be lifted, keep load close to body, keep back straight, lift with legs not with back, and do not twist when lifting. Review material handling procedures during safety meetings.
Tools, Machinery and Equipment Use: Hand tools will be used and power tools will be used. Use the proper tool for the job. Use GFCIs for power tool operation. Use safety glasses. Do not use damaged tools. Properly secure materials when working on them. Make sure area is adequately clear when using equipment. Inspect electrical cords.
Electrical Equipment: Fuel-powered generators will be used to provide electrical power on site. Use qualified electrical subcontractor to perform electrical work. Personnel must use GFCIs in conjunction with portable electric tools or other equipment connected to electrical extension cords. An assured equipment grounding conductor program must be implemented if GFCIs are not exclusively used. Portable electric tools must not be lifted or lowered by their power cord. Electrical extension cords must be rated for the amperage required. The plugs must not be altered or used incorrectly (such as the addition of non-grounded plug adapters). Electrical equipment cords should be kept coiled when not in use. When electrical equipment is in use, cords should be protected and positioned to avoid being run over by vehicles or equipment. Inspect electrical extension cords for damage and ground plugs. Keep electrical equipment/cords away from water and fuel materials. Electrical cords may not be used for raising or lowering the equipment. Electrical cords may not be fastened with staples or otherwise hung in such a fashion that could damage the outer jacket or insulation.
Lockout/Tagout: LOTO may be required. De-energize equipment and take measures to protect from release of stored energy. Turn off energy sources for equipment or disconnect. LOTO switches before servicing equipment. Lower parts of equipment and set on ground when possible or block equipment. Use standardized locks and tags to indicate the identity of the individual using them. Require each LOTO device to be removed by the individual who applied the device.
Noise Exposure: Hazard from noise exposure (hearing damage) during power tool and equipment operation. Wear earplugs when operating or working near operating machinery or equipment.
Heat Stress: Heat stress may occur when elevated ambient temperatures, moderate to heavy workloads, and/or use of impermeable protective clothing occur. Adjust work-rest schedules as needed. Work at a steady pace. Drink plenty of fluids. Take rest breaks and use shaded rest area. Know the signs and symptoms of heat exposure and emergency treatment.
Cold Stress: Cold stress may occur during the fall/winter/spring months when decreased ambient temperatures are present. For cold stress prevention, minimize exposure to temperatures below 45˚F. Wear insulated clothing for cold temperature work. Know the signs/symptoms of cold exposure and emergency treatment.
Compressed Gas Cylinder Safety: Compressed gas cylinders may be used if hot work is conducted. Move gas cylinders with caps installed. Make sure cylinder valves are securely closed and leak-free when not in use. Store cylinders upright and secure with chain. Maintain a minimum 20-foot between oxygen and acetylene cylinders in storage.
Ladder Safety: Ladders may be needed to access work areas. Do not stand on top two rungs of a ladder. Do not use metal ladders around electrical equipment. Have ladder extend at least 3 feet above elevated landings. Do not lean outward from ladder. Tie off extension ladders to secure.
Elevated Work Locations and Fall Protection: Work at elevated locations may occur. Personal fall arrest systems (full body harness, shock-absorbing lanyard, anchorage point) will be used for fall protection for work where there is a fall hazard of 6 feet or more.
Hoisting and Rigging: Hoisting and rigging may be needed. Require that operators know capacities and operating characteristics and limits of equipment. Know weight of load and do not load beyond manufacturer's load rating. Inspect slings and other hoisting and rigging equipment for damage before and during use. Use tag lines. Use standard hand signals or verbal commands from a signal person. Do not allow loads above personnel. Do not allow persons in the swing radius of rotating equipment.
Power Saw Operation: Power saw equipment will be used. Use eye and face protection. Ensure that operators know the proper operation of the saw. Do not allow saws to be operated with one hand or used at a height above chest level. Keep work areas clear of unnecessary personnel.

ACTIVITY HAZARD ANALYSIS

Aerial Lift Operation: An aerial lift (scissor lift) may be needed to access work areas. Aerial lift movement must be controlled by the operator. Survey the work area for overhead power lines. Fall protection (full body harness and shock-absorbing lanyard) must be used at elevated work areas with a fall hazard of 6 feet or greater.		
Pressure Washer Operation: Pressure washer equipment may be used for equipment cleaning. Use gloves, face, and eye protection during pressure washer operation. Keep area clear when washing. Do not clean boots with pressure washer. Watch for slippery surfaces and handling of slippery materials. Have fire extinguisher and emergency eyewash supplies immediately available.		
Inclement Weather and Adverse Environmental Conditions: Inclement weather conditions such as snow, strong winds, heavy rain, or lightning may occur during outdoor operations. Suspend outdoor operations during inclement weather or when other adverse environmental conditions exist.		
Miscellaneous Physical Hazards: General safety hazards will be present during all site tasks. Use PPE for head, eye, hand, foot, and body protection. Follow safe work practices. Watch for slip, trip, and fall hazards from uneven, wet, slippery ground surfaces. Keep ground areas clear of tripping hazards such as hoses, cords, boxes, and debris. Maintain good housekeeping. Look where walking. Maintain balance. Maintain three-point contact when stepping off equipment. Use short steps when walking on slippery surfaces. Communicate general safety information during safety meetings.		
PPE: Use prescribed levels of protection described in the PPE section of the HSP for the applicable work task. Hardhat, steel-toed boots, work gloves, safety glasses, face shield (grinding, cutting, and pressure washing); high-visibility safety vest (if vehicle or equipment traffic), and earplugs (if noise present). Use personal fall arrest systems (full-body harness, shock-absorbing lanyard, anchorage point) for activities at elevated work locations with a fall hazard of six-feet or more. Wear PVC work gloves when handling concrete. Wear PVC or rubber boots if on wet concrete. Note: Welders will use leather gloves and a welding hood or goggles with filtered lenses for welding and torch cutting. A welding jacket (and chaps if leg exposure hazard) will additionally be used where there is a hazard of flying sparks and slag.		
Site Emergencies: Preparation for site emergencies is always a requirement for site work. Set-up emergency communications. Prepare emergency supplies. Post emergency contact and hospital route information. Maintain emergency phone list/hospital location/route map on site. Have first-aid kit, fire extinguisher, and safety supplies available. Have cell phones available. Designate evacuation location and emergency signals. See the "Emergency Response Plan" section of HSP.		
EQUIPMENT TO BE USED	**INSPECTION REQUIREMENTS**	**TRAINING REQUIREMENTS**
Hand tools; Power tools; Generator; Compressor; Heavy equipment; Jackhammer; Roll-off bins; Slings; Shackles; Power saws; Aerial Lift; Pressure Washer; Spill kit; Safety tote; PPE.	Hot work permit; Safety inspection; Tool inspection; Heavy equipment inspection.	Site orientation briefing and HSP/AHA review; First-aid/CPR training (minimum two persons on site); HAZWOPER Training; Asbestos Hazard Training; Lead Hazard Training; Fall protection training.

ACTIVITY HAZARD ANALYSIS

ACTIVITY: GROUNDWATER WELL PUMP (1) BYPASS

Accepted By:

Risk Assessment Code (RAC): **M**

Date Prepared: 12/03/10
Prepared By: Ken Beatty, CSP, CHST
Reviewed By: Charlie McNeil

E = Extremely High Risk
H = High Risk
M = Moderate Risk
L = Low Risk

Recommended Protective Clothing and Equipment: Use Level D protection or upgrade to Modified Level D protection for excavation, dewatering, piping installation and backfilling.
Level D protection consists of: Hardhat, steel-toed boots, work gloves, safety glasses, high-visibility safety vest (if vehicle or equipment traffic), earplugs (if noise present).
Modified Level D protection consists of: Level D protection plus chemical protective clothing (disposable coveralls, PVC or nitrile gloves, PVC boots or boot covers).

		P R O B A B I L I T Y				
		Frequent	Likely	Occasional	Seldom	Unlikely
S E V E R I T Y	Catastrophic	**E**	**E**	**H**	**H**	**M**
	Critical	**E**	**H**	**H**	**M**	**L**
	Marginal	**H**	**M**	**M**	**L**	**L**
	Negligible	**M**	**L**	**L**	**L**	**L**

LIST OF COMPETENT PERSONS FOR THIS AHA:
General S&H: SSHO (Robert Landle).
Fire Protection: SSHO (Robert Landle).
Fall Protection: SSHO (Robert Landle).
Excavation: SSHO (Robert Landle).

RISK ASSESSMENT DEFINITIONS:

SEVERITY	
Catastrophic:	Mission failure; death or permanent disabling injury; damage to property >$200K.
Critical:	Major mission degradation; severe injury; occupational illness; or major system damage.
Marginal:	Minor mission degradation; injury; minor occupational illness; or minor system damage.
Negligible:	Less than minor mission degradation; injury; occupational illness; or minor system damage.
PROBABILITY	
Frequent:	Occurs often in the life of a system. Continuously experienced.
Likely:	Occurs often in the life of a system. Continuously experienced.
Occasional:	Will occur in the life of the system. Occurs sporadically.
Seldom:	Unlikely but can expect to occur in the life of the system. Occurs seldom.
Unlikely:	Unlikely but could occur in the life of a system. Occurs very rarely.

ACTIVITY HAZARD ANALYSIS

WORK TASK	POTENTIAL HAZARDS
Groundwater Well Pump (1) Temporary Bypass: -Excavation and Trenching -Piping Installation -Electrical Installation -Backfilling -Perform site cleanup and decontaminate equipment	**Chemical Hazards**: Potential exposure to VOCs during groundwater well pump bypass activities. **Biological Hazards**: Potential exposure to poisonous plants, snakes, spiders, rodents, and insects. **Physical Hazards**: Potential exposure to physical hazards: Fire protection; overhead utilities; underground utilities; heavy equipment operation; vehicle and equipment traffic; material handling; tools, machinery, and equipment use; electrical equipment; lockout/tagout; noise exposure; heat stress; cold stress; inclement weather and adverse environmental conditions; miscellaneous physical hazards. **SEE RECOMMENDED HAZARD CONTROLS BELOW**.

RECOMMENDED HAZARD CONTROLS
Chemical Hazards: Minimal potential for exposure to VOCs during equipment decontamination. Use prescribed levels of protection described in the PPE section of the SSHP. Properly don and doff protective clothing. Avoid contact with contaminated surfaces when possible. Use prescribed decontamination measures.
Biological Hazards: Biological hazards may be present. Watch for, and avoid contact with, poisonous plants, snakes, spiders, rodents, and insects. Apply repellant containing 20% - 30% DEET if needed.
Fire Protection: Gasoline and diesel fuel will be used for vehicle and equipment operation. No hot work is expected. Require fire extinguishers for each location. Allow smoking only in designated areas.
Overhead Utilities: Overhead utilities may be present. Keep heavy equipment away from overhead lines. Survey for overhead utilities before bringing equipment with high extensions (i.e., heavy equipment, dump truck, roll-off bin truck) into a work area. Do not operate equipment within 10-feet of overhead lines. Determine and comply with the required distance from energized overhead electric lines per EM 385-1-1 11F and Tables 11-1 and 11-3.
Underground Utilities: Underground utilities may be present. Obtain a dig permit before any ground disturbance. Marked locations of existing utilities will be approximate. Contact a utility locator to mark-out underground utilities in the work area. Complete utility clearance before subsurface work. Review and inspect utility mark-outs before excavating. If utilities are indicated in an area to be excavated, hand dig (or pot hole by air knife or water injection) two feet on either side of the marked utility to locate it. De-energize and/or use engineering controls for protection.
Heavy Equipment Operation: Heavy equipment will be used to excavate, backfill, and grade soil. Inspect heavy equipment daily and document. Check operation of backup alarms. Survey area for utilities. Have ground personnel wear high-visibility safety vests with reflective striping. Maintain positive contact between operator and ground personnel at all times. Use hand signals. Do not cross path of moving equipment or cross behind equipment. Position ground personnel out of the swing radius of operating heavy equipment when possible. Do not walk underneath loaded buckets. Require equipment operators to look before backing. Maintain dust control. Place bucket on the ground for equipment shut down.
Vehicle and Equipment Traffic: Concurrent use of vehicles and ground personnel will occur. Establish traffic control procedures when there is vehicle, heavy equipment, and/or pedestrian traffic present. Have workers wear high-visibility safety vests with reflective striping when working near traffic areas. Advise workers to look carefully where they walk to avoid vehicles and moving equipment. Maintain eye contact with heavy equipment operators. Use traffic control devices as needed. Use spotters if needed for backing of equipment and vehicles into tight work areas.
Material Handling: Material handling involving lifting, and carrying will occur. Wear work gloves when handling materials. Watch for items that can cut, puncture, pinch, or crush. Use proper lifting technique: size up load, get help for heavy or awkward items, get good grasp on object to be lifted, keep load close to body, keep back straight, lift with legs not with back, and do not twist when lifting. Review material handling procedures during safety meetings.

Tools, Machinery and Equipment Use: Hand and power tools may be used. Use the proper tool for the job. Use GFCIs for power tool operation. Use safety glasses. Do not use damaged tools. Properly secure materials when working on them. Make sure area is adequately clear when using equipment. Inspect electrical cords.
Electrical Equipment: Electrical equipment may be used. Generators may be used to provide electrical power. Use GFCIs for portable electrical equipment. Inspect electrical extension cords for damage and ground plugs. Keep electrical equipment/cords away from water and fuel materials. Use lockout/tagout procedures.
Lockout/Tagout: LOTO may be required. De-energize equipment and take measures to protect from release of stored energy. Turn off energy sources for equipment or disconnect. LOTO switches before servicing equipment. Lower parts of equipment and set on ground when possible or block equipment. Use standardized locks and tags to indicate the identity of the individual using them. Require each LOTO device to be removed by the individual who applied the device.
Noise Exposure: Noise exposure above 85 dBA is expected when working near or operating machinery and equipment. Wear earplugs for protection.
Heat Stress: Heat stress may occur when elevated ambient temperatures, moderate to heavy workloads, and/or use of impermeable protective clothing occur. Adjust work-rest schedules as needed. Work at a steady pace. Drink plenty of fluids. Take rest breaks and use shaded rest area. Know the signs and symptoms of heat exposure and emergency treatment.
Cold Stress: Cold stress may occur during the fall/winter/spring months when decreased ambient temperatures are present. For cold stress prevention, minimize exposure to temperatures below 45˚F. Wear insulated clothing for cold temperature work. Know the signs/symptoms of cold exposure and emergency treatment. Drink adequate fluids.
Inclement Weather and Adverse Environmental Conditions: Inclement weather conditions such as strong winds, heavy rain or lightning, and snow may occur during outdoor operations. Establish designated take cover area. Suspend outdoor operations during inclement weather or when other adverse environmental conditions exist. In case of work stoppage due to lightning, stay under shelter 30 minutes after last show of lightning or sound of thunder clap. Work will not resume until an all-clear signal has been communicated by the SSHO to affected personnel. Use decontamination procedures, as necessary, to remove bird or rodent excreta.
Miscellaneous Physical Hazards: General safety hazards will be present during site tasks. Use PPE for head, eye, hand, foot, and body protection. Follow safe work practices. Watch for slip, trip, and fall hazards from uneven, wet, slippery ground surfaces. Keep ground areas clear of tripping hazards such as hoses, cords, boxes, and debris. Maintain good housekeeping. Look where walking. Maintain balance. Maintain three-point contact when stepping off equipment. Use short steps when walking on slippery surfaces. Communicate general safety information during safety meetings.
Site Emergencies: Preparation for site emergencies is always a requirement for site work. Set-up emergency communications. Prepare emergency supplies. Post emergency contact and hospital route information. Maintain emergency phone list/hospital location/route map on site. Have first-aid kit, fire extinguisher, and safety supplies available. Have cell phones available. Designate evacuation location and emergency signals. See the "Emergency Response Plan" section of SSHP.

EQUIPMENT TO BE USED	INSPECTION REQUIREMENTS	TRAINING REQUIREMENTS
Hand tools; Power tools; Generator; Heavy equipment; Compactor; Dump truck; Spill kit; Safety tote; PPE.	Dig permit; Safety inspection; Tool inspection; Heavy equipment inspection; Equipment decontamination release authorization.	Site orientation briefing and APP/SSHP/AHA review; HAZWOPER training (site personnel); Excavation Competent Person (CP) First-aid/CPR training (minimum of two persons on site).

ACTIVITY HAZARD ANALYSIS

ACTIVITY: GROUNDWATER WELL SAMPLING

Accepted By:

Risk Assessment Code (RAC): **M**

Date Prepared: 12/03/10
Prepared By: Ken Beatty, CSP, CHST
Reviewed By: Charlie McNeil

E = Extremely High Risk
H = High Risk
M = Moderate Risk
L = Low Risk

Recommended Protective Clothing and Equipment: Use Level D protection for set-up and general groundwater well sampling activities. Modified Level D protection will be used for sample collection.

Level D protection consists of: Hardhat, steel-toed boots, work gloves, safety glasses, high-visibility safety vest (if vehicle or equipment traffic), earplugs (if noise present). Modified Level D protection consists of: Level D protection plus chemical protective clothing (disposable coveralls, PVC or nitrile gloves, PVC boots or boot covers).

		PROBABILITY				
		Frequent	Likely	Occasional	Seldom	Unlikely
SEVERITY	Catastrophic	**E**	**E**	**H**	**H**	**M**
	Critical	**E**	**H**	**H**	**M**	**L**
	Marginal	**H**	**M**	**M**	**L**	**L**
	Negligible	**M**	**L**	**L**	**L**	**L**

LIST OF COMPETENT PERSONS FOR THIS AHA:
General S&H: SSHO (Robert Landle)
Fire Protection: SSHO (Robert Landle).

RISK ASSESSMENT DEFINITIONS:

SEVERITY	
Catastrophic:	Mission failure; death or permanent disabling injury; damage to property >$200K.
Critical:	Major mission degradation; severe injury; occupational illness; or major system damage.
Marginal:	Minor mission degradation; injury; minor occupational illness; or minor system damage.
Negligible:	Less than minor mission degradation; injury; occupational illness; or minor system damage.
PROBABILITY	
Frequent:	Occurs often in the life of a system. Continuously experienced.
Likely:	Occurs often in the life of a system. Continuously experienced.
Occasional:	Will occur in the life of the system. Occurs sporadically.
Seldom:	Unlikely but can expect to occur in the life of the system. Occurs seldom.
Unlikely:	Unlikely but could occur in the life of a system. Occurs very rarely.

ACTIVITY HAZARD ANALYSIS

WORK TASK	POTENTIAL HAZARDS
Groundwater Well Sampling: -Collect and calibrate sampling equipment and set-up - Collect groundwater samples -Submit groundwater samples for laboratory analysis	**Chemical Hazards**: Minor potential for exposure to low-level VOC concentrations (PPE, air monitoring). **Biological Hazards**: Potential exposure to poisonous plants, snakes, spiders, rodents, and insects. **Physical Hazards**: Potential exposure to physical hazards: Fire protection; material handling; tools, machinery, and equipment use; electrical equipment; noise exposure; heat stress; cold stress; inclement weather and adverse environmental conditions; miscellaneous physical hazards. **SEE RECOMMENDED HAZARD CONTROLS BELOW**.

RECOMMENDED HAZARD CONTROLS
Chemical Hazards: Minimal potential for exposure to site contaminants during this activity. Use prescribed levels of protection described in the PPE section of the SSHP. Properly don and doff protective clothing. Avoid contact with contaminated surfaces when possible. Use prescribed decontamination measures.
Biological Hazards: Biological hazards may be present. Watch for, and avoid contact with, poisonous plants, snakes, spiders, rodents, and insects. Apply repellant containing 20% - 30% DEET if needed.
Fire Protection: Gasoline and diesel fuel will be used for equipment operation. No hot work is expected. Require fire extinguishers for each site location. Allow smoking only in designated areas.
Material Handling: Material handling involving lifting and carrying will occur. Wear work gloves when handling materials. Watch for items that can cut, puncture, pinch, or crush. Use proper lifting technique: size up load, get help for heavy or awkward items, get good grasp on object to be lifted, keep load close to body, keep back straight, lift with legs not with back, and do not twist when lifting. Review material handling procedures during safety meetings.
Tools, Machinery and Equipment Use: Hand tools will be used and power tools may be used. Use the proper tool for the job. Use GFCIs for power tool operation. Use safety glasses. Do not use damaged tools. Properly secure materials when working on them. Make sure area is adequately clear when using equipment. Inspect electrical cords.
Electrical Equipment: Generators may be used to provide electrical power. Use GFCIs for portable electrical equipment. Inspect electrical extension cords for damage and ground plugs. Keep electrical equipment/cords away from water and fuel materials. Use lockout/tagout procedures.
Noise Exposure: Noise exposure above 85 dBA is expected when working near or operating machinery and equipment. Wear earplugs for protection.
Heat Stress: Heat stress may occur when elevated ambient temperatures, moderate to heavy workloads, and/or use of impermeable protective clothing occur. Adjust work-rest schedules as needed. Work at a steady pace. Drink plenty of fluids. Take rest breaks and use shaded rest area. Know the signs/symptoms of heat exposure and emergency treatment.
Cold Stress: Cold stress may occur during the fall/winter/spring months when decreased ambient temperatures are present. For cold stress prevention, minimize exposure to temperatures below 45˚F. Wear insulated clothing for cold temperature work. Know the signs/symptoms of cold exposure and emergency treatment. Drink adequate fluids.
Inclement Weather and Adverse Environmental Conditions: Inclement weather conditions such as strong winds, heavy rain or lightning, and snow may occur during outdoor operations. Establish designated take cover area. Suspend outdoor operations during inclement weather or when other adverse environmental conditions exist. In case of work stoppage due to lightning, stay under shelter 30 minutes after last show of lightning or sound of thunder clap. Work will not resume until an all-clear signal has been communicated by the SSHO to affected personnel. Use decontamination procedures, as necessary, to remove bird or rodent excreta.
Miscellaneous Physical Hazards: General safety hazards will be present during all site tasks. Use PPE for head, eye, hand, foot, and body protection. Follow safe work practices. Watch for slip, trip, and fall hazards from uneven, wet, slippery ground surfaces. Keep ground areas clear of tripping hazards such as hoses, cords, boxes, and debris. Maintain good housekeeping. Look where walking. Maintain balance. Maintain three-point contact when stepping off equipment. Use short steps when walking on slippery surfaces. Communicate general safety information during safety meetings.

Site Emergencies: Preparation for site emergencies is always a requirement for site work. Set-up emergency communications. Prepare emergency supplies. Post emergency contact and hospital route information. Maintain emergency phone list/hospital location/route map on site. Have first-aid kit, fire extinguisher, and safety supplies available. Have cell phones available. Designate evacuation location and emergency signals. See the "Emergency Response Plan" section of SSHP.		
EQUIPMENT TO BE USED	**INSPECTION REQUIREMENTS**	**TRAINING REQUIREMENTS**
Hand tools; Sampling equipment; Decon solutions (detergent, nitric acid, deionized water); Hand sprayer; 5-gallon buckets; Sample containers; Coolers; Spill kit; Safety tote; PPE.	Safety inspection; Tool inspection.	Site orientation briefing and APP/SSHP/AHA review; HAZWOPER training (site personnel); First-aid/CPR training (minimum two persons on site).

ACTIVITY HAZARD ANALYSIS

ACTIVITY: GTS EQUIPMENT INSTALLATION, ELECTRICAL INSTALLATION, & SUPERVISORY CONTROL AND DATA ACQUISITION SYSTEM INSTALLATION

Accepted By:

Risk Assessment Code (RAC): **M**

Date Prepared: 12/03/10
Prepared By: Ken Beatty, CSP, CHST
Reviewed By: Chalie McNeil

E = Extremely High Risk
H = High Risk
M = Moderate Risk
L = Low Risk

Recommended Protective Clothing and Equipment: Use Level D protection for set-up and GTS equipment installation work activities.

Level D protection consists of: Hardhat, steel-toed boots, work gloves, safety glasses, high-visibility safety vest (if vehicle or equipment traffic), earplugs (if noise present).

		P R O B A B I L I T Y				
		Frequent	Likely	Occasional	Seldom	Unlikely
S E V E R I T Y	Catastrophic	**E**	**E**	**H**	**H**	**M**
	Critical	**E**	**H**	**H**	**M**	**L**
	Marginal	**H**	**M**	**M**	**L**	**L**
	Negligible	**M**	**L**	**L**	**L**	**L**

LIST OF COMPETENT PERSONS FOR THIS AHA:
General S&H: SSHO (Robert Landle)
Fire Protection: SSHO (Robert Landle).

RISK ASSESSMENT DEFINITIONS:

SEVERITY	
Catastrophic:	Mission failure; death or permanent disabling injury; damage to property >$200K.
Critical:	Major mission degradation; severe injury; occupational illness; or major system damage.
Marginal:	Minor mission degradation; injury; minor occupational illness; or minor system damage.
Negligible:	Less than minor mission degradation; injury; occupational illness; or minor system damage.
PROBABILITY	
Frequent:	Occurs often in the life of a system. Continuously experienced.
Likely:	Occurs often in the life of a system. Continuously experienced.
Occasional:	Will occur in the life of the system. Occurs sporadically.
Seldom:	Unlikely but can expect to occur in the life of the system. Occurs seldom.
Unlikely:	Unlikely but could occur in the life of a system. Occurs very rarely.

ACTIVITY HAZARD ANALYSIS

WORK TASK	POTENTIAL HAZARDS
GTS Equipment Installation: -GTS equipment installation -GTS electrical installation -GTS supervisory control and data acquisition system installation	**Chemical Hazards**: No anticipated exposure to chemical hazards during this activity. **Biological Hazards**: Potential exposure to poisonous plants, snakes, spiders, rodents, and insects. **Physical Hazards**: Potential exposure to physical hazards: Fire protection; overhead utilities; underground utilities; heavy equipment operation; hoisting and rigging; vehicle and equipment traffic; material handling; tools, machinery, and equipment use; electrical equipment; noise exposure; heat stress; cold stress; inclement weather and adverse environmental conditions; miscellaneous physical hazards. **SEE RECOMMENDED HAZARD CONTROLS BELOW**.

RECOMMENDED HAZARD CONTROLS
Chemical Hazards: No expected exposure to chemical hazards during this activity. Observe for any chemical hazards. Advise the SSHO if chemical hazards are observed and the potential for contact exists.
Biological Hazards: Biological hazards may be present. Watch for, and avoid contact with, poisonous plants, snakes, spiders, rodents, and insects. Apply repellant containing 20% - 30% DEET if needed.
Fire Protection: Gasoline and diesel fuel will be used for equipment operation. No hot work is expected. Require fire extinguishers for each site location. Allow smoking only in designated areas.
Overhead Utilities: Overhead utilities may be present. Keep heavy equipment away from overhead lines. Survey for overhead utilities before bringing equipment with high extensions (i.e., heavy equipment, dump truck, roll-off bin truck) into a work area. Do not operate equipment within 10-feet of overhead lines. Determine and comply with the required distance from energized overhead electric lines per EM 385-1-1 11F and Tables 11-1 and 11-3.
Underground Utilities: Underground utilities may be present. Review Base utility clearance information before conducting subsurface work. Coordinate utility clearance and obtain dig permit with Base Civil Engineering prior to digging. Review and inspect utility mark-outs before excavating. Hand dig in immediate vicinity of marked utilities. Immediately contact the Contracting Officer should damage to underground utilities or subsurface construction occur.
Heavy Equipment Operation: Heavy equipment will be used for soil excavation and loading. Inspect heavy equipment daily and document. Check operation of backup alarms. Survey area for utilities prior to initiating excavation work. Have ground personnel wear high-visibility safety vests with reflective striping. Maintain positive contact between operator and ground personnel at all times. Use hand signals. Do not cross path of moving equipment or cross behind equipment. Position ground personnel out of heavy equipment operating area when possible. Require operators to look before backing.
Hoisting and Rigging: Hoisting and rigging will occur. Require that operators know capacities and operating characteristics and limits of equipment. Know weight of load and do not load beyond manufacturer's load rating. Inspect slings and other hoisting and rigging equipment for damage before and during use. Use tag lines. Use standard hand signals or verbal commands from a signal person. Do not allow loads above personnel. Do not allow persons in the swing radius of rotating equipment.
Vehicle and Equipment Traffic: Concurrent use of heavy equipment, vehicles, and ground personnel will occur. Establish traffic control procedures when there is vehicle, heavy equipment, and/or pedestrian traffic present. Have workers wear high-visibility safety vests with reflective striping when working near traffic areas. Advise workers to look carefully where they walk to avoid vehicles and moving equipment and to maintain eye contact with heavy equipment operators. Use traffic control devices as needed. Use spotters if needed for backing of equipment and vehicles into tight work areas.
Material Handling: Material handling involving lifting and carrying will occur. Wear work gloves when handling materials. Watch for items that can cut, puncture, pinch, or crush. Use proper lifting technique: size up load, get help for heavy or awkward items, get good grasp on object to be lifted, keep load close to body, keep back straight, lift with legs not with back, and do not twist when lifting. Review material handling procedures during safety meetings.

ACTIVITY HAZARD ANALYSIS

Tools, Machinery and Equipment Use: Hand tools will be used and power tools may be used. Use the proper tool for the job. Use GFCIs for power tool operation. Use safety glasses. Do not use damaged tools. Properly secure materials when working on them. Make sure area is adequately clear when using equipment. Inspect electrical cords.
Electrical Equipment: Generators may be used to provide electrical power. Use GFCIs for portable electrical equipment. Inspect electrical extension cords for damage and ground plugs. Keep electrical equipment/cords away from water and fuel materials. Use lockout/tagout procedures if needed.
Noise Exposure: Noise exposure above 85 dBA is expected when working near or operating machinery and equipment. Wear earplugs for protection.
Heat Stress: Heat stress may occur when elevated ambient temperatures, moderate to heavy workloads, and/or use of impermeable protective clothing occur. Adjust work-rest schedules as needed. Work at a steady pace. Drink plenty of fluids. Take rest breaks and use shaded rest area. Know the signs and symptoms of heat exposure and emergency treatment.
Cold Stress: Cold stress may occur during the fall/winter/spring months when decreased ambient temperatures are present. For cold stress prevention, minimize exposure to temperatures below 45˚F. Wear insulated clothing for cold temperature work. Know the signs/symptoms of cold exposure and emergency treatment. Drink adequate fluids.
Inclement Weather and Adverse Environmental Conditions: Inclement weather conditions such as strong winds, heavy rain or lightning, and snow may occur during outdoor operations. Establish designated take cover area. Suspend outdoor operations during inclement weather or when other adverse environmental conditions exist. In case of work stoppage due to lightning, stay under shelter 30 minutes after last show of lightning or sound of thunder clap. Work will not resume until an all-clear signal has been communicated by the SSHO to affected personnel. Use decontamination procedures, as necessary, to remove bird or rodent excreta.
Miscellaneous Physical Hazards: General safety hazards will be present during all site tasks. Use PPE for head, eye, hand, foot, and body protection. Follow safe work practices. Watch for slip, trip, and fall hazards from uneven, wet, slippery ground surfaces. Keep ground areas clear of tripping hazards such as hoses, cords, boxes, and debris. Maintain good housekeeping. Look where walking. Maintain balance. Maintain three-point contact when stepping off equipment. Use short steps when walking on slippery surfaces. Communicate general safety information during safety meetings.
Site Emergencies: Preparation for site emergencies is always a requirement for site work. Set-up emergency communications. Prepare emergency supplies. Post emergency contact and hospital route information. Maintain emergency phone list/hospital location/route map on site. Have first-aid kit, fire extinguisher, and safety supplies available. Have cell phones available. Designate evacuation location and emergency signals. See the "Emergency Response Plan" section of SSHP.

EQUIPMENT TO BE USED	INSPECTION REQUIREMENTS	TRAINING REQUIREMENTS
Hand and power tools; Heavy equipment; Spill kit; Safety tote; PPE.	Safety inspection; Tool inspection; Heavy equipment inspection.	Site orientation briefing and APP/SSHP/AHA review; HazWOPER training (site personnel); First-aid/CPR training (minimum two persons on site).

ACTIVITY HAZARD ANALYSIS

ACTIVITY: GTS BUILDING AND PUMP HOUSE CONSTRUCTION; CONCRETE REINFORCEMENT AND FORMWORK; & CONCRETE MIXING, PLACEMENT, CURING AND FINISHING

Accepted By:

Risk Assessment Code (RAC): **M**

Date Prepared: 12/03/10
Prepared By: Ken Beatty, CSP, CHST
Reviewed By: Charlie McNeil

E = Extremely High Risk
H = High Risk
M = Moderate Risk
L = Low Risk

Recommended Protective Clothing and Equipment: Use Level D protection for general construction work tasks. Use Modified Level D protection for potential direct contact with concrete and associated substances.

Level D protection consists of: Hardhat, steel-toed boots, work gloves, safety glasses, high-visibility safety vest (if vehicle or equipment traffic), earplugs (if noise present). Modified Level D protection consists of: Level D protection plus chemical protective clothing (disposable coveralls, PVC or nitrile gloves, PVC boots or boot covers).

		P R O B A B I L I T Y				
		Frequent	Likely	Occasional	Seldom	Unlikely
S E V E R I T Y	Catastrophic	**E**	**E**	**H**	**H**	**M**
	Critical	**E**	**H**	**H**	**M**	**L**
	Marginal	**H**	**M**	**M**	**L**	**L**
	Negligible	**M**	**L**	**L**	**L**	**L**

LIST OF COMPETENT PERSONS FOR THIS AHA:
General S&H: SSHO (Robert Landle)
Fire Protection: SSHO (Robert Landle).
Fall Protection: SSHO (Robert Landle).
Scaffold Safety: SSHO (Robert Landle).
Crane Operation: Crane operator (TBD).

RISK ASSESSMENT DEFINITIONS:

SEVERITY	
Catastrophic:	Mission failure; death or permanent disabling injury; damage to property >$200K.
Critical:	Major mission degradation; severe injury; occupational illness; or major system damage.
Marginal:	Minor mission degradation; injury; minor occupational illness; or minor system damage.
Negligible:	Less than minor mission degradation; injury; occupational illness; or minor system damage.
PROBABILITY	
Frequent:	Occurs often in the life of a system. Continuously experienced.
Likely:	Occurs often in the life of a system. Continuously experienced.
Occasional:	Will occur in the life of the system. Occurs sporadically.
Seldom:	Unlikely but can expect to occur in the life of the system. Occurs seldom.
Unlikely:	Unlikely but could occur in the life of a system. Occurs very rarely.

ACTIVITY HAZARD ANALYSIS

WORK TASK	POTENTIAL HAZARDS
General Construction: Concrete reinforcement and formwork Concrete mixing, placement, curing and finishing GTS building and pump house construction.	**Chemical Hazards**: Exposure to airborne dust, epoxy coatings and paint during this activity. **Biological Hazards**: Potential exposure to poisonous snakes, spiders, rodents, ants, bees, and mosquitoes. **Physical Hazards**: Potential exposure to physical hazards: Fire protection and hot work; overhead utilities; underground utilities; heavy equipment operation; excavation and trench safety; vehicle and equipment traffic; material handling; tools, machinery, and equipment use; electrical safety; lockout/tagout; noise exposure; heat stress; forklift operation; ladder safety; elevated work locations and fall protection; aerial lift operation; crane operation; hoisting and rigging; power saw operation; inclement weather and adverse environmental conditions; miscellaneous physical hazards.

RECOMMENDED HAZARD CONTROLS

Chemical Hazards: Possible exposure to airborne dust, epoxy coatings and paint. Use dust control measures (water spray application) during dust generating activities. Use respiratory protection during painting. Use prescribed levels of protection described in the PPE section of the SSHP for the applicable work task.

Biological Hazards: Biological hazards may be present in work areas. Watch for, and avoid contact with, poisonous snakes, spiders, rodents, ants, bees, and mosquitoes. Apply repellant containing 20% - 30% DEET if needed.

Fire Protection and Hot Work: Gasoline and diesel fuel will be used for vehicles and machinery operation. Hot work may be needed. Require fire extinguishers for each site location. Allow smoking only in designated areas. OSHA-approved metal safety cans, painted red with a yellow stripe, that have self-closing lids and flame arrestors must be used to store small quantities of flammable liquids. Hot work is prohibited in areas where flammable materials or equipment containing flammable materials may be present. Follow hot work safety procedures including the use of a hot work permit and fire watch for hot work.

Overhead Utilities: Overhead utilities may be present. Survey for overhead utilities before bringing equipment with high extensions (scaffold, aerial lift, scissor lift, crane) into a work area. Do not operate equipment within 10-feet of overhead lines. Determine/comply with the required distance from energized overhead electric lines per EM 385-1-1 11E and Tables 11-1 and 11-3. De-energize and/or use engineering controls for protection.

Underground Utilities: Underground utilities may be present. Obtain a dig permit before any ground disturbance. Obtain and review base utility map. Marked locations of existing utilities will be approximate. Contact a utility locator to mark-out underground utilities in the work area. Complete utility clearance before subsurface work. Review and inspect utility mark-outs before excavating. If utilities are indicated in an area to be excavated, hand dig (or pot hole by air knife or water injection) two feet on either side of the marked utility to locate it. De-energize and/or use engineering controls for protection.

Heavy Equipment Operation: Heavy equipment may be used for construction activities. Inspect heavy equipment. Check backup alarms. Survey for utilities. Have ground personnel wear high-visibility safety vests. Maintain positive contact between operator and ground personnel. Use hand signals. Do not cross path of moving equipment or walk behind equipment. Keep out of heavy equipment operating area when possible. Require operators to look before backing. Maintain dust control. Place bucket on the ground for equipment shut down.

Excavation and Trench Safety: It is not anticipated that excavation activities requiring personnel entry into trenches 4 feet or more in depth or excavations 5 feet or more in depth will be needed. If needed, these activities require strict implementation of excavation safety procedures. Complete excavation entry according to OSHA requirements. Check for underground utilities before excavation. Survey for overhead utilities and do not operate equipment within 10 feet of overhead lines. Have a "Competent Person" supervise operations, conduct daily inspections, and use protective systems (sloping, benching, shielding, and/or shoring) for excavation operations.

Vehicle and Mobile Equipment Traffic: Concurrent use of mobile equipment, vehicles, and ground personnel will occur. Establish traffic control procedures. Have workers wear high-visibility safety vests in traffic areas. Have workers look where they walk to avoid moving vehicles and equipment. Maintain eye contact with equipment operators. Use traffic control devices. Use spotters for backing into tight work areas. For driver safety: Wear seat belts. Observe posted speeds and traffic signs. Keep load secure. Wear required PPE. Check overhead clearance from utilities. Set brakes and use chocks on an incline.

Material Handling: Material handling involving lifting and carrying will occur. Wear work gloves when handling materials. Watch for items that can cut, puncture, pinch, or crush. Use proper lifting technique: size up load, get help for heavy or awkward items, get good grasp on object to be lifted, keep load close to body, keep back straight, lift with legs not with back, and do not twist when lifting. Review material handling procedures during safety meetings.
Tools, Machinery and Equipment Use: Hand tools will be used and power tools may be used. Use the proper tool for the job. Use GFCIs for power tool operation. Use safety glasses. Do not use damaged tools. Properly secure materials when working on them. Make sure area is adequately clear when using equipment. Inspect electrical cords.
Electrical Equipment: Fuel-powered generators may be used to provide electrical power on site. Use qualified electrical subcontractor to perform electrical work. Personnel must use GFCIs in conjunction with portable electric tools or other equipment connected to electrical extension cords. Implement assured equipment grounding conductor program if GFCIs are not exclusively used. Portable electric tools must not be lifted or lowered by their power cord. Electrical extension cords must be rated for the amperage required. The plugs must not be altered or used incorrectly (such as the addition of non-grounded plug adapters). Electrical equipment cords should be kept coiled when not in use. When electrical equipment is in use, cords should be protected and positioned to avoid being run over by vehicles or equipment. Inspect electrical extension cords for damage and ground plugs. Keep electrical equipment/cords away from water and fuel materials. Electrical cords may not be used for raising or lowering the equipment. Electrical cords may not be fastened with staples or otherwise hung in such a fashion that could damage the outer jacket or insulation.
Lockout/Tagout: LOTO procedures may be needed. Deenergize equipment and take measures to protect from release of stored energy. Turn off energy sources for equipment or disconnect. LOTO switches before servicing equipment. Use standardized locks and tags to indicate the identity of the individual using them. Require each LOTO device to be removed only by the individual who applied the device.
Noise Exposure: Hazard from noise exposure (hearing damage) during power tool and equipment operation. Wear earplugs when operating or working near operating machinery or equipment.
Heat Stress: Hazard from heat exposure when moderate to heavy workloads and elevated ambient temperatures are present. Adjust work-rest schedules. Work at a steady pace. Drink fluids. Take rest breaks and use shaded rest area. Know the signs and symptoms of heat stress and treatment. Monitor for heat stress, as required.
Cold Stress: Cold stress may occur during the fall/winter/spring months when decreased ambient temperatures are present. For cold stress prevention, minimize exposure to temperatures below 45˚F. Wear insulated clothing for cold temperature work. Know the signs/symptoms of cold exposure and emergency treatment.
Compressed Gas Cylinder Safety: Compressed gas cylinders may be used if hot work is conducted. Move gas cylinders with caps installed. Make sure cylinder valves are securely closed and leak-free when not in use. Store cylinders upright and secure with chain. Maintain a minimum 20-foot between oxygen and acetylene cylinders in storage.
Ladder Safety: Ladders may be needed to access work areas. Do not stand on top two rungs of a ladder. Do not use metal ladders around electrical equipment. Have ladder extend at least 3 feet above elevated landings. Do not lean outward from ladder. Tie off extension ladders to secure.
Elevated Work Locations and Fall Protection: Work at elevated locations will occur. Personal fall arrest systems (full body harness, shock-absorbing lanyard, anchorage point) will be used for fall protection for work where there is a fall hazard of 6 feet or more.
Aerial Lift Operation: An aerial lift may be used to access elevated work locations. Survey the work area for overhead utilities. Man lifts and scissor lifts are not allowed to operate within a 10-foot radius (minimum distance) of overhead power lines. Personnel working in elevated locations with a fall hazard of 6 feet or more require use of personal fall arrest systems (full-body harness, shock-absorbing lanyard, and anchorage point). Personnel must always stand firmly on the man lift basket floor or scissor lift platform, and must not sit or climb on the guardrails to obtain a work position.
Crane Operation: A crane may be used to lift building materials and/or equipment. Require that operators know and do not exceed load capacities of the crane. Check for load limit data plate and operating manual in cab and posting of crane hand signals. Check for current crane inspection certification. Do not allow work within 10 feet of overhead lines. Ensure that crane is leveled on a flat surface. Use outriggers. Balance and secure load with swing path clear of obstacles and personnel. Properly rig load. Use tag lines on loads. Do not permit personnel underneath loads.

Hoisting and Rigging: Hoisting and rigging will be needed. Require that operators know capacities and operating characteristics and limits of equipment. Know weight of load and do not load beyond manufacturer's load rating. Inspect slings and other hoisting and rigging equipment for damage before and during use. Use tag lines. Use standard hand signals or verbal commands from a signal person. Do not allow loads above personnel. Do not allow persons in the swing radius of rotating equipment.

Power Saw Operation. Hazard from power saw operation (cut, puncture, pinch or crush; noise exposure; hand, eye or other injury; electrical shock or electrocution) when using power saws (concrete saw; chop saw). Use eye and face protection. Ensure that operators know the proper operation of the saw. Do not allow saws to be operated with one hand or used at a height above chest level. Keep work areas clear of unnecessary personnel. Use concrete saws with water injection to prevent dust.

Concrete Construction: Concrete construction will be performed. Wear PVC work gloves when handling concrete. Wear PVC or rubber boots if on wet concrete. Check concrete mix for proper water content and thickness. Follow safe work practices. Do not allow persons to work above or in positions exposed to protruding rebar or other impalement hazards. Use reinforced rebar caps to cover protruding rebar and use fall protection when working above covered rebar as caps have a very limited protection rating. Watch material handling of the fabric with the wire mesh for impalement hazards. Properly erect and support forms. Wear rubber boots and gloves to avoid chemical burns from fresh concrete. Avoid pinch point on concrete chutes. Do not remove forms until the person responsible for forming determines that the concrete has gained sufficient strength to support its weight and superimposed loads.

Inclement Weather and Adverse Environmental Conditions: Hazards from inclement weather conditions such as snow, heavy rain, lightning, and strong winds (wet and slippery surfaces, electrocution, falling objects) during site work. : Suspend outdoor work if inclement weather or when other adverse environmental conditions exist.

Miscellaneous Physical Hazards: Hazards from various site conditions such as uneven or wet ground surfaces (slip, trip, and fall hazard) and when performing miscellaneous tasks (hand, eye or other injury hazard). Use PPE for head, eye, hand, foot, and body protection; follow safe work practices; watch for slip, trip, and fall hazards from uneven, wet, slippery ground surfaces; keep ground areas clear of tripping hazards such as hoses, cords, boxes, and debris; maintain good housekeeping.

PPE: Use prescribed levels of protection described in the PPE section of the SSHP for the applicable work task. Hardhat, steel-toed boots, work gloves, safety glasses, face shield (grinding, cutting, and pressure washing); high-visibility safety vest (if vehicle or equipment traffic), and earplugs (if noise present). Use personal fall arrest systems (full-body harness, shock-absorbing lanyard, anchorage point) for activities at elevated work locations with a fall hazard of six-feet or more. Wear PVC work gloves when handling concrete. Wear PVC or rubber boots if on wet concrete. Note: Welders will use leather gloves and a welding hood or goggles with filtered lenses for welding and torch cutting. A welding jacket (and chaps if leg exposure hazard) will additionally be used where there is a hazard of flying sparks and slag.

Site Emergencies: Preparation for site emergencies is always a requirement for site work. Set-up emergency communications. Prepare emergency supplies. Post emergency contact and hospital route information. Maintain emergency phone list/hospital location/route map on site. Have first-aid kit, fire extinguisher, and safety supplies available. Have cell phones available. Designate evacuation location and emergency signals. See the "Emergency Response Plan" section of SSHP.

EQUIPMENT TO BE USED	INSPECTION REQUIREMENTS	TRAINING REQUIREMENTS
Hand tools; Power tools; Generator; Compressor; Forklift; Boom truck crane; Slings; Shackles; Ladder; Rolling tower scaffold; Aerial lift; Power saws; Concrete pump truck; Concrete vibrator; Painting equipment and materials; Air monitoring instrument; Spill kit; Safety tote; PPE.	Hot work permit; Safety inspection; Tool inspection; Heavy Equipment Inspection Aerial lift inspection.	Site orientation briefing and SSHP/AHA review; First-aid/CPR training (minimum two persons on site); HazWOPER training (site personnel); Fall protection training (site personnel); Aerial lift training (operator and users);

ACTIVITY HAZARD ANALYSIS

ACTIVITY: EXCAVATION, GRADING AND BACKFILLING FOR FLOOD STORAGE CREATION

Accepted By:

Risk Assessment Code (RAC): **M**

Date Prepared: 12/03/10
Prepared By: Ken Beatty, CSP, CHST
Reviewed By: Charlie McNeil

E = Extremely High Risk
H = High Risk
M = Moderate Risk
L = Low Risk

Recommended Protective Clothing and Equipment: Use Level D protection for set-up, excavation, grading and backfilling for flood storage creation work tasks. Use Modified Level D protection if potential for contact with contaminated substances exist.

Level D protection consists of: Hardhat, steel-toed boots, work gloves, safety glasses, high-visibility safety vest (if vehicle or equipment traffic), earplugs (if noise present). Modified Level D protection consists of: Level D protection plus chemical protective clothing (disposable coveralls, PVC or nitrile gloves, PVC boots or boot covers).

		PROBABILITY				
		Frequent	Likely	Occasional	Seldom	Unlikely
SEVERITY	Catastrophic	**E**	**E**	**H**	**H**	**M**
	Critical	**E**	**H**	**H**	**M**	**L**
	Marginal	**H**	**M**	**M**	**L**	**L**
	Negligible	**M**	**L**	**L**	**L**	**L**

LIST OF COMPETENT PERSONS FOR THIS AHA:
General S&H: SSHO (Robert Landle)
Fire Protection: SSHO (Robert Landle)
Excavation CP: SSHO (Robert Landle).

RISK ASSESSMENT DEFINITIONS:

SEVERITY	
Catastrophic:	Mission failure; death or permanent disabling injury; damage to property >$200K.
Critical:	Major mission degradation; severe injury; occupational illness; or major system damage.
Marginal:	Minor mission degradation; injury; minor occupational illness; or minor system damage.
Negligible:	Less than minor mission degradation; injury; occupational illness; or minor system damage.
PROBABILITY	
Frequent:	Occurs often in the life of a system. Continuously experienced.
Likely:	Occurs often in the life of a system. Continuously experienced.
Occasional:	Will occur in the life of the system. Occurs sporadically.
Seldom:	Unlikely but can expect to occur in the life of the system. Occurs seldom.
Unlikely:	Unlikely but could occur in the life of a system. Occurs very rarely.

ACTIVITY HAZARD ANALYSIS

WORK TASK	POTENTIAL HAZARDS
Excavation, Grading and Backfilling for Flood Storage Creation: -Excavation -Backfilling -Grading -Survey and final grading	**Chemical Hazards**: No anticipated exposure to chemical hazards during this activity. **Biological Hazards**: Potential exposure to poisonous plants, snakes, spiders, rodents, and insects. **Physical Hazards**: Potential exposure to physical hazards: Fire protection; overhead utilities; underground utilities; excavation and trench safety; heavy equipment operation; vehicle and equipment traffic; material handling; tools, machinery, and equipment use; electrical equipment; noise exposure; heat stress; cold stress; inclement weather and adverse environmental conditions; miscellaneous physical hazards. **SEE RECOMMENDED HAZARD CONTROLS BELOW**.

RECOMMENDED HAZARD CONTROLS
Chemical Hazards: No expected exposure to chemical hazards during this activity. Observe for any chemical hazards. Advise the SSHO if chemical hazards are observed and the potential for contact exists.
Biological Hazards: Biological hazards may be present. Watch for, and avoid contact with, poisonous plants, snakes, spiders, rodents, and insects. Apply repellant containing 20% - 30% DEET if needed.
Fire Protection: Gasoline and diesel fuel will be used for equipment operation. No hot work is expected. Require fire extinguishers for each site location. Allow smoking only in designated areas.
Overhead Utilities: Overhead utilities may be present. Keep heavy equipment away from overhead lines. Survey for overhead utilities before bringing equipment with high extensions (i.e., heavy equipment, dump truck, roll-off bin truck) into a work area. Do not operate equipment within 10-feet of overhead lines. Determine and comply with the required distance from energized overhead electric lines per EM 385-1-1 11F and Tables 11-1 and 11-3.
Underground Utilities: Underground utilities may be present. Review utility clearance information before conducting subsurface work. Coordinate utility clearance prior to digging. Review and inspect utility mark-outs before excavating. Hand dig in immediate vicinity of marked utilities. Immediately contact the Contracting Officer should damage to underground utilities or subsurface construction occur.
Excavation and Trench Safety: Excavation operations may involve personnel entry into trenches or excavations greater than 4 feet in depth. Complete excavation entry operations according to OSHA requirements if entry into trenches 4 feet or more in depth or excavations 5 feet or more in depth. Check for underground utilities before excavation. Survey for overhead utilities before bringing equipment with high extensions (heavy equipment) into a work area. Do not operate equipment within 10 feet of overhead lines. For excavation entry operations, have a "Competent Person" supervise operations, conduct daily inspections, and implement protective systems for excavation operations (sloping, benching, shielding, and/or shoring).
Heavy Equipment Operation: Heavy equipment will be used for excavation, backfilling and grading activities. Inspect heavy equipment daily and document. Check operation of backup alarms. Survey area for utilities prior to initiating excavation work. Have ground personnel wear high-visibility safety vests with reflective striping. Maintain positive contact between operator and ground personnel at all times. Use hand signals. Do not cross path of moving equipment or cross behind equipment. Position ground personnel out of heavy equipment operating area when possible. Require operators to look before backing.
Vehicle and Equipment Traffic: Concurrent use of heavy equipment, vehicles, and ground personnel will occur. Establish traffic control procedures when there is vehicle, heavy equipment, and/or pedestrian traffic present. Have workers wear high-visibility safety vests with reflective striping when working near traffic areas. Advise workers to look carefully where they walk to avoid vehicles and moving equipment and to maintain eye contact with heavy equipment operators. Use traffic control devices as needed. Use spotters if needed for backing of equipment and vehicles into tight work areas.

Material Handling: Material handling involving lifting and carrying will occur. Wear work gloves when handling materials. Watch for items that can cut, puncture, pinch, or crush. Use proper lifting technique: size up load, get help for heavy or awkward items, get good grasp on object to be lifted, keep load close to body, keep back straight, lift with legs not with back, and do not twist when lifting. Review material handling procedures during safety meetings.

Tools, Machinery and Equipment Use: Hand tools will be used and power tools may be used. Use the proper tool for the job. Use GFCIs for power tool operation. Use safety glasses. Do not use damaged tools. Properly secure materials when working on them. Make sure area is adequately clear when using equipment. Inspect electrical cords.

Electrical Equipment: Generators may be used to provide electrical power. Use GFCIs for portable electrical equipment. Inspect electrical extension cords for damage and ground plugs. Keep electrical equipment/cords away from water and fuel materials. Use lockout/tagout procedures.

Noise Exposure: Noise exposure above 85 dBA is expected when working near or operating machinery and equipment. Wear earplugs for protection.

Heat Stress: Heat stress may occur when elevated ambient temperatures, moderate to heavy workloads, and/or use of impermeable protective clothing occur. Adjust work-rest schedules as needed. Work at a steady pace. Drink plenty of fluids. Take rest breaks and use shaded rest area. Know the signs/symptoms of heat exposure and emergency treatment.

Cold Stress: Cold stress may occur during the fall/winter/spring months when decreased ambient temperatures are present. For cold stress prevention, minimize exposure to temperatures below 45˚F. Wear insulated clothing for cold temperature work. Know the signs/symptoms of cold exposure and emergency treatment. Drink adequate fluids.

Inclement Weather and Adverse Environmental Conditions: Inclement weather conditions such as strong winds, heavy rain or lightning, and snow may occur during outdoor operations. Establish designated take cover area. Suspend outdoor operations during inclement weather or when other adverse environmental conditions exist. In case of work stoppage due to lightning, stay under shelter 30 minutes after last show of lightning or sound of thunder clap. Work will not resume until an all-clear signal has been communicated by the SSHO to affected personnel. Use decontamination procedures, as necessary, to remove bird or rodent excreta.

Miscellaneous Physical Hazards: General safety hazards will be present during all site tasks. Use PPE for head, eye, hand, foot, and body protection. Follow safe work practices. Watch for slip, trip, and fall hazards from uneven, wet, slippery ground surfaces. Keep ground areas clear of tripping hazards such as hoses, cords, boxes, and debris. Maintain good housekeeping. Look where walking. Maintain balance. Maintain three-point contact when stepping off equipment. Use short steps when walking on slippery surfaces. Communicate general safety information during safety meetings.

Site Emergencies: Preparation for site emergencies is always a requirement for site work. Set-up emergency communications. Prepare emergency supplies. Post emergency contact and hospital route information. Maintain emergency phone list/hospital location/route map on site. Have first-aid kit, fire extinguisher, and safety supplies available. Have cell phones available. Designate evacuation location and emergency signals. See the "Emergency Response Plan" section of SSHP.

EQUIPMENT TO BE USED	INSPECTION REQUIREMENTS	TRAINING REQUIREMENTS
Hand and power tools; Generator; Heavy equipment; Dump trucks; Water truck; Spill kit; Safety tote; PPE.	Safety inspection; Heavy equipment inspection; Excavation inspection; Tool inspection.	Site orientation briefing and APP/SSHP/AHA review; HazWOPER training (site personnel); First-aid/CPR training (minimum two persons on site); Excavation Safety training.

ACTIVITY HAZARD ANALYSIS

ACTIVITY: TRANSPORTATION AND DISPOSAL OF WASTE/SPOILS

Accepted By:

Risk Assessment Code (RAC): **M**

Date Prepared: 12/03/10
Prepared By: Ken Beatty, CSP, CHST
Reviewed By: Charlie McNeil

E = Extremely High Risk
H = High Risk
M = Moderate Risk
L = Low Risk

Recommended Protective Clothing and Equipment: Use Level D protection for transportation and disposal work tasks. Use Modified Level D protection if potential for contact with contaminated substances exist.

Level D protection consists of: Hardhat, steel-toed boots, work gloves, safety glasses, high-visibility safety vest (if vehicle or equipment traffic), earplugs (if noise present). Modified Level D protection consists of: Level D protection plus chemical protective clothing (disposable coveralls, PVC or nitrile gloves, PVC boots or boot covers).

		P R O B A B I L I T Y				
		Frequent	Likely	Occasional	Seldom	Unlikely
S E V E R I T Y	Catastrophic	**E**	**E**	**H**	**H**	**M**
	Critical	**E**	**H**	**H**	**M**	**L**
	Marginal	**H**	**M**	**M**	**L**	**L**
	Negligible	**M**	**L**	**L**	**L**	**L**

LIST OF COMPETENT PERSONS FOR THIS AHA:
General S&H: SSHO (Robert Landle)
Fire Protection: SSHO (Robert Landle).

RISK ASSESSMENT DEFINITIONS:

SEVERITY	
Catastrophic:	Mission failure; death or permanent disabling injury; damage to property >$200K.
Critical:	Major mission degradation; severe injury; occupational illness; or major system damage.
Marginal:	Minor mission degradation; injury; minor occupational illness; or minor system damage.
Negligible:	Less than minor mission degradation; injury; occupational illness; or minor system damage.
PROBABILITY	
Frequent:	Occurs often in the life of a system. Continuously experienced.
Likely:	Occurs often in the life of a system. Continuously experienced.
Occasional:	Will occur in the life of the system. Occurs sporadically.
Seldom:	Unlikely but can expect to occur in the life of the system. Occurs seldom.
Unlikely:	Unlikely but could occur in the life of a system. Occurs very rarely.

ACTIVITY HAZARD ANALYSIS

WORK TASK	POTENTIAL HAZARDS
Transportation and Disposal of Waste/Spoils: -Staging and stockpiling of spoils and waste debris -Transport and disposal of waste materials.	**Chemical Hazards**: Minor potential exposure to site waste contaminants. **Biological Hazards**: Potential exposure to poisonous plants, snakes, spiders, rodents, and insects. **Physical Hazards**: Potential exposure to physical hazards: Fire protection; overhead utilities; heavy equipment operation; vehicle and equipment traffic; material handling; tools, machinery, and equipment use; electrical equipment; noise exposure; heat stress; cold stress; water safety; inclement weather and adverse environmental conditions; miscellaneous physical hazards. **SEE RECOMMENDED HAZARD CONTROLS BELOW**.

RECOMMENDED HAZARD CONTROLS
Chemical Hazards: Minimal potential for exposure to site waste contaminants during this work activity. Use prescribed levels of protection described in the PPE section of the SSHP. Properly don and doff protective clothing. Avoid contact with contaminated surfaces when possible. Use prescribed decontamination measures.
Biological Hazards: Biological hazards may be present. Watch for, and avoid contact with, poisonous plants, snakes, spiders, rodents, and insects. Apply repellant containing 20% - 30% DEET if needed.
Fire Protection: Gasoline and diesel fuel will be used for equipment operation. No hot work is expected. Require fire extinguishers for each site location. Allow smoking only in designated areas.
Overhead Utilities: Overhead utilities may be present. Keep heavy equipment away from overhead lines. Survey for overhead utilities before bringing equipment with high extensions (i.e., heavy equipment, dump truck, roll-off bin truck) into a work area. Do not operate equipment within 10-feet of overhead lines. Determine and comply with the required distance from energized overhead electric lines per EM 385-1-1 11F and Tables 11-1 and 11-3.
Heavy Equipment Operation: Heavy equipment will be used for loading waste in preparation for transport. Inspect heavy equipment daily and document. Check operation of backup alarms. Survey area for utilities prior to initiating excavation work. Have ground personnel wear high-visibility safety vests with reflective striping. Maintain positive contact between operator and ground personnel at all times. Use hand signals. Do not cross path of moving equipment or cross behind equipment. Position ground personnel out of heavy equipment operating area when possible. Require operators to look before backing.
Vehicle and Equipment Traffic: Concurrent use of heavy equipment, vehicles, and ground personnel will occur. Establish traffic control procedures when there is vehicle, heavy equipment, and/or pedestrian traffic present. Have workers wear high-visibility safety vests with reflective striping when working near traffic areas. Advise workers to look carefully where they walk to avoid vehicles and moving equipment and to maintain eye contact with heavy equipment operators. Use traffic control devices as needed. Use spotters if needed for backing of equipment and vehicles into tight work areas.
Material Handling: Material handling involving lifting and carrying will occur. Wear work gloves when handling materials. Watch for items that can cut, puncture, pinch, or crush. Use proper lifting technique: size up load, get help for heavy or awkward items, get good grasp on object to be lifted, keep load close to body, keep back straight, lift with legs not with back, and do not twist when lifting. Review material handling procedures during safety meetings.
Tools, Machinery and Equipment Use: Hand tools will be used and power tools may be used. Use the proper tool for the job. Use GFCIs for power tool operation. Use safety glasses. Do not use damaged tools. Properly secure materials when working on them. Make sure area is adequately clear when using equipment. Inspect electrical cords.
Electrical Equipment: Generators may be used to provide electrical power. Use GFCIs for portable electrical equipment. Inspect electrical extension cords for damage and ground plugs. Keep electrical equipment/cords away from water and fuel materials. Use lockout/tagout procedures.
Noise Exposure: Noise exposure above 85 dBA is expected when working near or operating machinery and equipment. Wear earplugs for protection.

Heat Stress: Heat stress may occur when elevated ambient temperatures, moderate to heavy workloads, and/or use of impermeable protective clothing occur. Adjust work-rest schedules as needed. Work at a steady pace. Drink plenty of fluids. Take rest breaks and use shaded rest area. Know the signs/symptoms of heat exposure and emergency treatment.		
Cold Stress: Cold stress may occur during the fall/winter/spring months when decreased ambient temperatures are present. For cold stress prevention, minimize exposure to temperatures below 45˚F. Wear insulated clothing for cold temperature work. Know the signs/symptoms of cold exposure and emergency treatment. Drink adequate fluids.		
Inclement Weather and Adverse Environmental Conditions: Inclement weather conditions such as strong winds, heavy rain or lightning, and snow may occur during outdoor operations. Establish designated take cover area. Suspend outdoor operations during inclement weather or when other adverse environmental conditions exist. In case of work stoppage due to lightning, stay under shelter 30 minutes after last show of lightning or sound of thunder clap. Work will not resume until an all-clear signal has been communicated by the SSHO to affected personnel. Use decontamination procedures, as necessary, to remove bird or rodent excreta.		
Miscellaneous Physical Hazards: General safety hazards will be present during all site tasks. Use PPE for head, eye, hand, foot, and body protection. Follow safe work practices. Watch for slip, trip, and fall hazards from uneven, wet, slippery ground surfaces. Keep ground areas clear of tripping hazards such as hoses, cords, boxes, and debris. Maintain good housekeeping. Look where walking. Maintain balance. Maintain three-point contact when stepping off equipment. Use short steps when walking on slippery surfaces. Communicate general safety information during safety meetings.		
Site Emergencies: Preparation for site emergencies is always a requirement for site work. Set-up emergency communications. Prepare emergency supplies. Post emergency contact and hospital route information. Maintain emergency phone list/hospital location/route map on site. Have first-aid kit, fire extinguisher, and safety supplies available. Have cell phones available. Designate evacuation location and emergency signals. See the "Emergency Response Plan" section of SSHP.		
EQUIPMENT TO BE USED	**INSPECTION REQUIREMENTS**	**TRAINING REQUIREMENTS**
Hand and power tools; Heavy equipment; Generator; Spill kit; Safety tote; PPE.	Safety inspection; Tool inspection; Heavy equipment inspection.	Site orientation briefing and APP/SSHP/AHA review; HazWOPER training (site personnel); First-aid/CPR training (minimum two persons on site).

ACTIVITY HAZARD ANALYSIS

ACTIVITY: SITE RESTORATION AND DEMOBILIZATION

Accepted By:

Date Prepared: 12/03/10
Prepared By: Ken Beatty, CSP, CHST
Reviewed By: Charlie McNeil

Risk Assessment Code (RAC): **M**

E = Extremely High Risk
H = High Risk
M = Moderate Risk
L = Low Risk

Recommended Protective Clothing and Equipment: Use Level D protection for backfilling, compaction, tilling, seeding, and site restoration. Use Modified Level D protection for equipment decontamination.

Level D protection consists of: Hardhat, steel-toed boots, work gloves, safety glasses, high-visibility safety vest (if vehicle or equipment traffic), earplugs (if noise present). Modified Level D protection consists of: Level D protection plus chemical protective clothing (disposable coveralls, PVC or nitrile gloves, PVC boots or boot covers).

		P R O B A B I L I T Y				
		Frequent	Likely	Occasional	Seldom	Unlikely
S E V E R I T Y	Catastrophic	**E**	**E**	**H**	**H**	**M**
	Critical	**E**	**H**	**H**	**M**	**L**
	Marginal	**H**	**M**	**M**	**L**	**L**
	Negligible	**M**	**L**	**L**	**L**	**L**

LIST OF COMPETENT PERSONS FOR THIS AHA:
General S&H: SSHO (Robert Landle)
Fire Protection: SSHO (Robert Landle).

RISK ASSESSMENT DEFINITIONS:

SEVERITY	
Catastrophic:	Mission failure; death or permanent disabling injury; damage to property >$200K.
Critical:	Major mission degradation; severe injury; occupational illness; or major system damage.
Marginal:	Minor mission degradation; injury; minor occupational illness; or minor system damage.
Negligible:	Less than minor mission degradation; injury; occupational illness; or minor system damage.
PROBABILITY	
Frequent:	Occurs often in the life of a system. Continuously experienced.
Likely:	Occurs often in the life of a system. Continuously experienced.
Occasional:	Will occur in the life of the system. Occurs sporadically.
Seldom:	Unlikely but can expect to occur in the life of the system. Occurs seldom.
Unlikely:	Unlikely but could occur in the life of a system. Occurs very rarely.

ACTIVITY HAZARD ANALYSIS

WORK TASK	POTENTIAL HAZARDS
Site Restoration and Demobilization: -Backfill and compact impacted areas -Conduct site restoration tasks -Perform site cleanup and decontaminate equipment -Transport and dispose of waste at approved facilities -Demobilize personnel and equipment.	**Chemical Hazards**: No anticipated exposure to site contaminants during site restoration activities. Potential exposure to VOCs during equipment decontamination. **Biological Hazards**: Potential exposure to poisonous plants, snakes, spiders, rodents, and insects. **Physical Hazards**: Potential exposure to physical hazards: Fire protection; overhead utilities; heavy equipment operation; vehicle and equipment traffic; material handling; tools, machinery, and equipment use; electrical equipment; noise exposure; heat stress; cold stress; inclement weather and adverse environmental conditions; miscellaneous physical hazards. **SEE RECOMMENDED HAZARD CONTROLS BELOW**.

RECOMMENDED HAZARD CONTROLS
Chemical Hazards: Minimal potential for exposure to VOCs during equipment decontamination. Use prescribed levels of protection described in the PPE section of the SSHP. Properly don and doff protective clothing. Avoid contact with contaminated surfaces when possible. Use prescribed decontamination measures.
Biological Hazards: Biological hazards may be present. Watch for, and avoid contact with, poisonous plants, snakes, spiders, rodents, and insects. Apply repellant containing 20% - 30% DEET if needed.
Fire Protection: Gasoline and diesel fuel will be used for vehicle and equipment operation. No hot work is expected. Require fire extinguishers for each location. Allow smoking only in designated areas.
Overhead Utilities: Overhead utilities may be present. Keep heavy equipment away from overhead lines. Survey for overhead utilities before bringing equipment with high extensions (i.e., heavy equipment, dump truck, roll-off bin truck) into a work area. Do not operate equipment within 10-feet of overhead lines. Determine and comply with the required distance from energized overhead electric lines per EM 385-1-1 11F and Tables 11-1 and 11-3.
Heavy Equipment Operation: Heavy equipment will be used to backfill, grade and compact soil for site restoration. Inspect heavy equipment daily and document. Check operation of backup alarms. Survey area for utilities. Have ground personnel wear high-visibility safety vests with reflective striping. Maintain positive contact between operator and ground personnel at all times. Use hand signals. Do not cross path of moving equipment or cross behind equipment. Position ground personnel out of the swing radius of operating heavy equipment when possible. Do not walk underneath loaded buckets. Require equipment operators to look before backing. Maintain dust control. Place bucket on the ground for equipment shut down.
Vehicle and Equipment Traffic: Concurrent use of vehicles and ground personnel will occur. Establish traffic control procedures when there is vehicle, heavy equipment, and/or pedestrian traffic present. Have workers wear high-visibility safety vests with reflective striping when working near traffic areas. Advise workers to look carefully where they walk to avoid vehicles and moving equipment. Maintain eye contact with heavy equipment operators. Use traffic control devices as needed. Use spotters if needed for backing of equipment and vehicles into tight work areas.
Material Handling: Material handling involving lifting, and carrying will occur. Wear work gloves when handling materials. Watch for items that can cut, puncture, pinch, or crush. Use proper lifting technique: size up load, get help for heavy or awkward items, get good grasp on object to be lifted, keep load close to body, keep back straight, lift with legs not with back, and do not twist when lifting. Review material handling procedures during safety meetings.
Tools, Machinery and Equipment Use: Hand and power tools may be used. Use the proper tool for the job. Use GFCIs for power tool operation. Use safety glasses. Do not use damaged tools. Properly secure materials when working on them. Make sure area is adequately clear when using equipment. Inspect electrical cords.
Electrical Equipment: Electrical equipment may be used. Generators may be used to provide electrical power. Use GFCIs for portable electrical equipment. Inspect electrical extension cords for damage and ground plugs. Keep electrical equipment/cords away from water and fuel materials. Use lockout/tagout procedures.

ACTIVITY HAZARD ANALYSIS

Noise Exposure: Noise exposure above 85 dBA is expected when working near or operating machinery and equipment. Wear earplugs for protection.		
Heat Stress: Heat stress may occur when elevated ambient temperatures, moderate to heavy workloads, and/or use of impermeable protective clothing occur. Adjust work-rest schedules as needed. Work at a steady pace. Drink plenty of fluids. Take rest breaks and use shaded rest area. Know the signs and symptoms of heat exposure and emergency treatment.		
Cold Stress: Cold stress may occur during the fall/winter/spring months when decreased ambient temperatures are present. For cold stress prevention, minimize exposure to temperatures below 45˚F. Wear insulated clothing for cold temperature work. Know the signs/symptoms of cold exposure and emergency treatment. Drink adequate fluids.		
Inclement Weather and Adverse Environmental Conditions: Inclement weather conditions such as strong winds, heavy rain or lightning, and snow may occur during outdoor operations. Establish designated take cover area. Suspend outdoor operations during inclement weather or when other adverse environmental conditions exist. In case of work stoppage due to lightning, stay under shelter 30 minutes after last show of lightning or sound of thunder clap. Work will not resume until an all-clear signal has been communicated by the SSHO to affected personnel. Use decontamination procedures, as necessary, to remove bird or rodent excreta.		
Miscellaneous Physical Hazards: General safety hazards will be present during site tasks. Use PPE for head, eye, hand, foot, and body protection. Follow safe work practices. Watch for slip, trip, and fall hazards from uneven, wet, slippery ground surfaces. Keep ground areas clear of tripping hazards such as hoses, cords, boxes, and debris. Maintain good housekeeping. Look where walking. Maintain balance. Maintain three-point contact when stepping off equipment. Use short steps when walking on slippery surfaces. Communicate general safety information during safety meetings.		
Site Emergencies: Preparation for site emergencies is always a requirement for site work. Set-up emergency communications. Prepare emergency supplies. Post emergency contact and hospital route information. Maintain emergency phone list/hospital location/route map on site. Have first-aid kit, fire extinguisher, and safety supplies available. Have cell phones available. Designate evacuation location and emergency signals. See the "Emergency Response Plan" section of SSHP.		
EQUIPMENT TO BE USED	**INSPECTION REQUIREMENTS**	**TRAINING REQUIREMENTS**
Hand tools; Power tools; Generator; Heavy equipment; Compactor; Dump truck; Water truck; Spill kit; Safety tote; PPE.	Safety inspection; Tool inspection; Heavy equipment inspection; Equipment decontamination release authorization.	Site orientation briefing and APP/SSHP/AHA review; HazWOPER training (site personnel); First-aid/CPR training (minimum of two persons on site).

APPENDIX C

PROJECT PERSONNEL TRAINING INFORMATION

-REVISION 005-

CONTRACTOR QUALITY CONTROL PLAN

ROCKAWAY WELLFIELD
SUPERFUND SITE
EAST MAIN/WALL STREET (EM/WS) PLUME
MORRIS COUNTY, NEW JERSEY

Contract No.: W912DQ-05-D-0001
Task Order No.: 0005

Prepared for:

U.S. ARMY CORPS OF ENGINEERS
KANSAS CITY DISTRICT
601 East 12th Street, Room 410
Kansas City, Missouri 64106-2896

Prepared by:

180 Gordon Drive, Suite 105
Exton, Pennsylvania 19341-1340

CAPE Project No.: 50001.005

May 2011

TABLE OF CONTENTS

Section ***Page***

LIST OF ABBREVIATIONS AND ACRONYMS iii

1.0 INTRODUCTION 1
- 1.1 Site Location and Background 1
- 1.2 Scope of Work 3
- 1.3 Specification Crosswalk 5
- 1.4 Definable Features of Work 5
- 1.5 Contractor Quality Control Plan Objectives 5

2.0 PROJECT ORGANIZATION AND RESPONSIBILITIES 7
- 2.1 General 7
- 2.2 CQC Management Organization 7
- 2.3 Responsibilities 7
  - 2.3.1 Project Manager 7
  - 2.3.2 Contractor Quality Controls Systems Manager 8
  - 2.3.3 Quality Manager 8
  - 2.3.4 Remedial Design Technical Lead 8

3.0 INSPECTION AND TESTING 9
- 3.1 Inspections 9
  - 3.1.1 Preparatory Inspection 9
  - 3.1.2 Initial Inspection 10
  - 3.1.3 Follow-Up Inspection 11
  - 3.1.4 Inspection of Delivered Materials 11
  - 3.1.5 Punch-Out Inspection 11
  - 3.1.6 Pre-Final Inspection 11
  - 3.1.7 Final Acceptance Inspection 12
- 3.2 Testing 12
  - 3.2.1 Compaction and Density Testing 12
  - 3.2.2 Hydrostatic Testing 13
  - 3.2.3 Pavement Testing 13
    - 3.2.3.1 Step Drawdown / Specific Capacity Testing 13
  - 3.2.4 Concrete Testing 14
  - 3.2.5 Submersible Pump Field Testing 15
  - 3.2.6 Hydraulic Testing of Groundwater Treatment Facilities 15
  - 3.2.7 Motor Tests and Checks 15
  - 3.2.8 Electrical Distribution Field Testing 16
- 3.3 Standards 16

4.0 PROJECT MEETING 17
- 4.1 Project Meeting 17
  - 4.1.1 Preconstruction Meeting 17
  - 4.1.2 Monthly Coordination Meetings 17

4.1.3 Weekly Progress Report 17
4.1.4 Problem Resolution Meeting 18

5.0 REPORTING AND DOCUMENTATION 19
5.1 Contractor Quality Control Reports.....19
5.2 Submittals 20
5.3 Submittal Register.....21
5.4 Deficiency Tracking System.....21
5.5 Inspections and Review Documentation.....22
5.6 As-Built Drawings 22

FIGURES

1 Site Location Map
2 Organizational Chart

TABLES

1 Specification Crosswalk
2 Preparatory and Initial Inspection Schedule
3 Master Deficiency List
4 CQC Test Report List
5 Testing Matrix Table

APPENDICES

A Resumes of Project Staff
B Construction Daily Quality Control Report
C ENG Form 4288
D ENG Form 4025

LIST OF ABBREVIATIONS AND ACRONYMS

amsl	Above Mean Sea Level
API	American Petroleum Institute
APP	Accident Prevention Plan
ASTM	American Society for Testing and Materials
ATK	Alliant Techsystems
AWS	American Welding Society
AWWA	American Water Works Association
°C	Celsius
CAPE	CAPE Environmental Management Inc
CDM	Camp, Dresser & McKee (CDM Federal Programs Corporation)
CO	Contracting Officer
COR	Contracting Officer's Representative
CQC	Contractor Quality Control
CQCP	Contractor Quality Control Plan
CQCSM	Contractor Quality Controls Systems Manager
CRA	Conestoga-Rovers & Associates
DC	Direct Current
DFW	Definable Feature of Work
DQCR	Daily Quality Control Reports
DSW	Discharge to Surface Water
EM/WS	East Main/Wall Street
EPA	U.S. Environmental Protection Agency
°F	Fahrenheit
FSP	Field Sampling Plan
ft^2	square foot/feet
GTS	groundwater treatment system
HDPE	High-Density Polyethylene
HDR	HDR, Inc.
HP	Horsepower
IDLH	Immediately Dangerous to Life and Health
K&K	Klockner & Klockner
mg/kg	milligrams per kilogram
mg/l	milligrams per liter
NEMA	National Electrical Manufacturers Association
NETA	National Electrical Testing Association
NFPA	National Fire Protection Association
NJDEP	New Jersey Department of Environmental Protection

NJDOTSS	New Jersey Department of Transportation Standard Specifications
NPL	National Priority List
O&M	Operation and Maintenance
OBG	O'Brien and Gere
PCE	Tetrachloroethene
PDI	Pre-design Investigation
PE	Professional Engineer
PG	Professional Geologist
PGM	Program Manager
PM	Project Manager
ppm	parts per million
QA	Quality Assurance
QAPP	Quality Assurance Project Plan
QC	Quality Control
QCS	Quality Control System
RA	Remedial Action
RD	Remedial Design
RI/FS	Remedial Investigation/Feasibility Study
RMS	Resident Management System
ROD	Record of Decision
SAP	Sampling and Analysis Plan
SERAS	Scientific, Engineering, Response, & Analytical Services
SOP	Standard Operating Procedure
SOW	Statement of Work
SSHO	Site Safety & Health Officer
SSHP	Site Safety and Health Plan
TBD	To Be Determined
TCE	Trichloroethylene
TO	Task Order
UL	Underwriters Laboratory
USACE	U.S. Army Corps of Engineers
V	Volt
VOC	Volatile Organic Compounds
yd^3	Cubic Yard(s)

1.0 INTRODUCTION

This Contractor Quality Control (CQC) Plan (CQCP) establishes a comprehensive Quality Control (QC) System (QCS) to be implemented by CAPE Environmental Management Inc (CAPE) for services associated with the U.S. Army Corps of Engineers (USACE) *Rockaway Wellfield Superfund Site, East Main/Wall Street (EM/WS), Morris County, New Jersey* project (Figure 1). Work is being performed by USACE for the Environmental Protection Agency (EPA). CAPE project work will be conducted under Contract Number W912DQ-05-D-0001, Task Order (TO) No. 0005, for the USACE, Kansas City District.

The CQCP describes CAPE's proposed procedures for inspections, monitoring, follow-up, and corrective actions for all phases of work. The information provided in this plan will ensure compliance with the quality and schedule goals and applicable statutory and regulatory requirements.

Additional plans that have been developed for this comprehensive project will be referenced throughout this document and are summarized below:

- Sample and Analysis Plan (SAP) – A Field Sampling Plan (FSP) and a Quality Assurance Project Plan (QAPP) are incorporated into the SAP. The FSP provides guidance for the field sampling activities by defining in detail the sampling and data-gathering methods that will be employed during the soil removal activities. The FSP will define the sampling protocols in accordance with New Jersey Department of Environmental Protection (NJDEP) and federal standards. The QAPP describes the policy, organization, functional activities, and quality assurance (QA)/QC protocols necessary to achieve the data quality objectives for the individual projects

- Accident Prevention Plan (APP) – The Site Safety and Health Plan (SSHP) is incorporated into the APP. The APP provides site-specific facility information on waste types and characteristics, potential types of hazards, levels of protection required, monitoring and equipment required, and emergency procedures to be implemented in the event of an emergency.

1.1 Site Location and Background

The Rockaway Borough Well Field Site is located in the north central region of New Jersey and encompasses approximately 2.1 square miles (Figure 1). Rockaway Borough obtains its potable water supply from groundwater using three supply wells (GW-1, GW-5, and GW-6). The municipal well field serves approximately 10,000 residents of Rockaway Borough and its surrounding communities at a rate of approximately 1.2 million gallons per day.

In 1981, contamination by volatile organic compounds (VOCs) was discovered in the municipal water supply and a granular activated carbon treatment system was installed. In 1993, an air stripping system was added in advance of the carbon treatment system to improve system operation and reduce operating costs.

Extensive soil and groundwater studies were conducted within Rockaway Borough by the NJDEP and the EPA. These studies led to a 1986 Record of Decision (ROD) for continued

operation and maintenance (O&M) of the Rockaway Borough water treatment system. A second ROD was issued in 1991, which called for groundwater extraction of plumes emanating from the Klockner & Klockner (K&K) and the EM/WS areas.

In 1994, EPA and Thiokol entered into a Consent Decree whereby Thiokol agreed to, among other things, conduct the Remedial Design (RD) for the Rockaway Borough Well Field Site. In the RD, Thiokol was required to address both the tetrachloroethene (PCE) plume emanating from the EM/WS area and the trichloroethene (TCE) plume emanating from the K&K site, but only to remediate the K&K plume via a groundwater remedy. Thiokol was not required to implement the remedial action (RA) for the PCE plume or for any sources of contamination throughout the Borough, emanating from the EM/WS area.

In 2001, Alliant Techsystems (ATK) replaced Thiokol as the Responsible Party for this project and completed the RD.

In November 2002, an Intermediate (65%) Design Report was prepared and submitted for the EM/WS Plume. In July 2003, the Borough of Rockaway decided against granting access to the EPA for constructing the EM/WS Plume treatment building in the Borough of Rockaway Public Works Yard.

In May 2004, the Borough of Rockaway wrote that it was unable to allow for the construction of the EM/WS treatment building in its public works yard, but was receptive to other locations. In September 2004, two potential locations were identified on land owned by the Borough. In November 2004, the Borough of Rockaway passed a resolution that authorized the Borough of Rockaway to enter into an access agreement with the EPA to construct the EM/WS treatment building in Rockaway River Park along Jackson Avenue.

On July 12, 2005, a technical meeting was held between the EPA, the USACE, and their subcontractors along with Conestoga-Rovers & Associates (CRA). The purpose of the meeting was to discuss the changes to the EM/WS RD with respect to the location of the EM/WS plume treatment building, the alignment of the new forcemain route, and preparation of project specifications and drawings. Based on the results of the July 12, 2005, meeting, the Revised Intermediate (65%) Design Report was prepared.

In August 2005, a Revised Intermediate (65%) Design Report was submitted that presented updated drawings and specifications to reflect the new EM/WS Plume groundwater treatment building and forcemain route.

On September 28, 2005, CRA, on behalf of ATK, submitted the Pre-Final (95%) Design Report to the EPA. The Pre-Final (95%) Design Report presented updated drawings and specifications, along with an updated cost estimate.

On November 9, 2005, the EPA submitted comments to ATK on the Pre-Final (95%) Design Report. The Final (100%) Design Report was submitted in February 2006.

CAPE was originally tasked with the RA, through its pre-placed RA contract W912DQ-05-D-0001, TO 005. CAPE's initial scope included installing extraction wells EW-5, EW-6 and EW-7 and conducting an aquifer pumping test. These wells were installed in the summer of

2007 in accordance with the design documents developed by CAPE's design subcontractor, Camp, Dresser & McKee (CDM), in accordance with the preliminary design developed by CRA. At the EPA's request a piezometer, EW-7A was also installed in the summer of 2007 to better understand the hydrogeologic conditions during the pumping tests due to concerns about the possible presence of a confining layer in the EW-7 area noted during the pilot hole boring program. CDM conducted step drawdown tests to evaluate well performance and constant rate pumping tests to estimate/understand the effects of long-term pumping and the influence of the extraction wells on the aquifer. During the performance of these tests and the subsequent reporting of results, CAPE and CDM presented a report that identified data gaps that required resolution before the RA could proceed. In the spring of 2008, EPA concurred that the data gaps required resolution, so an RD contractor was tasked to perform additional groundwater investigation to further refine the government's understanding of the hydrogeologic conditions.

From April-June 2009, EPA's RD contractor, HDR, Inc. (HDR)|O'Brien and Gere (OBG) Joint Venture, conducted a Pre-Design Investigation (PDI) as part of OU2 which included the installation of monitoring wells and piezometers throughout the EM/WS plume and completion of an aquifer (pumping) test to determine whether the current extent of contamination had been defined and whether the source(s) had been adequately characterized, which ultimately effects the RA at the site (groundwater extraction and treatment).

From January-March 2010, HDR|OBG and Lockheed Martin Scientific, Engineering, Response, & Analytical Services (SERAS) assisted EPA in the additional assessment of the groundwater contaminant plume. Work consisted of the installation and sampling of 11 overburden piezometers located outside the source area to better define both the horizontal and vertical extent of the groundwater plume. The results of the PDI provided additional information that was used to update the conceptual site model and relocated two of the existing extraction locations (EW-5 and EW-7) and add EW-9 and EW-10, since the understanding of the plume location had changed. The Revision 0 PDI Report was completed in April 2010.

In October 2010, CAPE's TO was modified to include the revised RA scope involving the relocation of EW-5 and EW-7 (new well will be called EW-8) along with the installation of EW-9 and EW-10. Also included in the modified scope of work, CAPE was tasked to construct a combined groundwater treatment system (GTS) / GW-1 pump house building. The existing pump house for GW-1 (one of Rockaway Borough's public supply wells) requires demolition and construction to bring the combined building into building and fire code compliance. Under this revised scope, CAPE will install four new extraction wells, install vaults and force main to convey extracted groundwater to a GTS, construct the GTS, demolish and construct the GW-1 pump house, perform system start up and operational checks. Once this scope is complete, CAPE will turnover O&M of the GTS to another long term response action contractor.

1.2 Scope of Work

The scope of work identified in this CQCP includes all work necessary to provide complete plant installation, certification, and initial operation for one year following the completion of

the pre-mobilization work for the RA for the Rockaway Borough Well Field Superfund Site. The required tasks are outlined in the following sections.

The work consists primarily of the construction and testing of a GTS, construction of pipelines from extraction wells to GTS, and from groundwater system to the point of discharge.

Specific tasks associated with the completion of activities outlined in the statement of work include, but are not limited to:

- Obtaining the necessary permits and approvals from the applicable federal, state and/or local agencies to execute this phase of work
- Providing all utilities, materials, equipment, labor and facilities required to perform the work in accordance with the previously received plans and specifications prepared by CDM
- Complying with all applicable health and safety requirements
- Establishing temporary facilities and security
- Performing a utility site survey prior to construction activities
- Taking pre-construction photographs and videos; progress photographs and completion photographs
- Installation of soil erosion and sediment control measures
- Providing site surveys, including but not limited to pre-construction topographical, construction layout, quantities calculation and as-builts
- Demolition of existing pump house and implementation of bypass system for Rockaway Borough's water supply well GW-1 during demolition and subsequent construction of the new combined building
- Installation of treatment plant and new pump house (co-located in one building), equipment and all associated utilities
- Construction of a basin within HUC 14-06CA09 to compensate for loss of flood storage volume due to construction of the pump house/treatment plant building within the flood zone
- Installation of influent piping from extraction wells to the treatment system and effluent piping from the treatment system to the point of discharge
- Backfill and compaction of pipe trenching
- Treatment of contaminated groundwater
- Sampling and analysis of influent and effluent to meet the NJDEP/Discharge to Surface Water (DSW) sampling requirements and to evaluate whether the surface water discharge criteria is met during start up and performance testing periods only
- Site restoration and restoration of all disturbed areas
- Demobilization and securing the sites

- Providing all submittals to the Contracting Officer (CO) representative (COR)
- Providing initial training of government employees or agents on the operation of the treatment plant.

1.3 Specification Crosswalk

A specification crosswalk has been developed to highlight the specification for which CRA or USACE will provide the governing documentation for construction and operation activities for this project. Table 1 illustrates the crosswalk between the CRA and USACE specifications to highlight which specification sets the performance criteria and which specification provides construction QC parameters.

1.4 Definable Features of Work

For the purposes of this CQCP, CAPE has organized project activities into the following primary field project work tasks:

- Mobilization
- Site Preparation
- Extraction/Monitoring Well Installation
- Aquifer Pump Testing
- Monitoring Well and Boring Abandonment
- Pipe Trenching and Installation
- Surveying
- Building Demolition
- GW-1 Bypass System
- GTS Building and Pump House Construction
- GTS Equipment Installation
- GTS Electrical Installation
- GTS Supervisory Control and Data Acquisition System Installation
- GTS Water Supply piping
- Start-up and Performance Testing
- Excavation, Grading, and Backfilling for Flood Storage Creation
- Groundwater Sampling
- Concrete Reinforcement and Formwork
- Concrete mixing, placement, curing and finishing
- Site Restoration and Demobilization
- Transportation and Disposal of Waste/Spoils.

1.5 Contractor Quality Control Plan Objectives

This CQCP has been prepared in accordance with USACE requirements. The plan describes the construction activities and CQC systems that CAPE will employ to ensure that construction activities comply with the requirements of the project scope.

The CQCP identifies the personnel, procedures, instructions, records, and forms to be used in the QC management of this project. The plan addresses each component of the QCS,

including responsibility and authority, inspections, testing and sampling, and documentation and reporting. The following sections describe the components of the QCS.

2.0 PROJECT ORGANIZATION AND RESPONSIBILITIES

2.1 General

CAPE will have the responsibility and authority for development, modification, and implementation of the CQCP. The CQCP will be implemented independently of the oversight performed by USACE representatives. Resumes for key personnel are presented in Appendix A.

2.2 CQC Management Organization

An organizational chart showing the reporting relationship of personnel involved in this project is provided as Figure 2. The chart illustrates the lines of authority from the CAPE project manager (PM) through the project personnel and subcontractors.

The organizational structure of this project illustrates the project management organization; describes the responsibilities and authorities of key personnel; identifies the responsibilities of personnel to assess and implement the requirements established by the CQCP; and describes the reporting relationships and lines of communication and authority.

All CQC personnel will have successfully completed the USACE Training Course, Construction Quality Management for Contractors, and will review and received an adequate briefing on the Site Specific CQCP prior to working at the site.

2.3 Responsibilities

Responsibilities of the CQC personnel are described in the following sections. Safety is an integral part of all operations and is part of the responsibility of all project staff. All observed safety deficiencies will be reported to the Site Safety & Health Officer (SSHO). Any activities that are deemed to be immediately dangerous to life or health (IDLH) will be stopped immediately and the Site Superintendent and SSHO will be notified.

2.3.1 Project Manager

The PM, Dave Bettendorf, PG, will have the overall responsibility for all technical, contractual, safety, and administrative matters for CAPE under this contract. He will ensure that a high degree of client responsiveness is maintained. Additionally, he will be responsible for reviewing and approving plans, overseeing staff selection, monitoring contract and task funds and schedules, and implementing QA/QC processes. He is also responsible for the overall conformance of the work to USACE requirements and specifications. This responsibility includes the preparation and timely submission of all required work plans. The PM will also see that the project schedule and budget allow sufficient resources to properly construct and document the required elements of the work in accordance with the approved work plans.

The PM will be the primary contact between USACE and CAPE. He will be in regular contact with the COR regarding project status, potential schedule and cost impacts, and QC issues.

2.3.2 Contractor Quality Controls Systems Manager

The Contractor Quality Controls Systems Manager (CQCSM), Humberto Altamirano, is responsible for the overall management of the QCS and has the authority to act independently in all QC matters. The responsibilities of the CQCSM include:

- Management of the performance of all onsite and offsite inspections and testing
- Evaluation of the results of the inspections and testing
- Notification of the PM of acceptance or rejection of the work
- Management of the documentation of all inspections and testing, and notifications to project management through Daily QC Reports (DQCRs)
- Review all required submittals relating to QC, and forwarding all submittals to the COR.

The CQCSM will have the authority to suspend work that does not meet the standards established by the work performance specifications. Should modifications or revisions to the specifications relating to QC be required, the CQCSM will prepare a request for modification to revisions, and submit the request to the COR. The CQCSM will ensure that approval of the modification or revision is received before allowing the modifications to occur in the field.

2.3.3 Quality Manager

The Quality Manager for CAPE's remediation unit, Henry Vaca, will supervise the QC activities of the CQCSM. In addition, the quality manager will ensure that additional QC resources are provided to the project to provide oversight on specialized tasks, as deemed necessary. All QC records and activities are subject to review by the Quality Manager.

2.3.4 Remedial Design Technical Lead

The RD Technical Lead for this project is Michael Popper. Mr. Popper and his engineering staff at CDM will provide review of all submittals to ensure compliance with design package.

3.0 INSPECTION AND TESTING

3.1 Inspections

To ensure all construction activities comply with the requirements of the specifications, the CQCSM will perform three phases of inspection, as described in the following sections. The phased inspection system will be implemented for all definable features of the work (DFWs), as specified in the work plan. All inspections will be recorded and attached to the Construction DQCRs.

A copy of the Construction DQCR is provided in Appendix B. The DFWs addressed by this section include:

- Mobilization
- Site Preparation
- Extraction/Monitoring Well Installation
- Aquifer Pump Testing
- Monitoring Well and Boring Abandonment
- Pipe Trenching and Installation
- Surveying
- Building Demolition
- GW-1 Bypass System
- GTS Building and Pump House Construction
- GTS Equipment Installation
- GTS Electrical Installation
- GTS Supervisory Control and Data Acquisition System Installation
- GTS Water Supply piping
- Groundwater Sampling
- Start-up and Performance Testing
- Excavation, Grading, and Backfilling for Flood Storage Creation
- Concrete Reinforcement and Formwork
- Concrete mixing, placement, curing and finishing
- Site Restoration and Demobilization
- Transportation and Disposal of Waste/Spoils.

A spread sheet for scheduled inspection dates has been provided in Table 2.

3.1.1 Preparatory Inspection

A preparatory phase inspection will be performed prior to the commencement of work on each DFW. In some cases, multiple DFWs will be covered in a single preparatory meeting. The preparatory phase will include:

- Reviewing each paragraph of applicable specifications
- Reviewing contract drawings and plans
- Checking to ensure that all materials and/or equipment have been tested, submitted, and approved

- Reviewing provisions that have been made to provide required control inspection and testing
- Examining the work area to ensure that all required preliminary work has been completed and is in compliance with the contract
- Physically examining required materials, equipment, and sample work to ensure that they are on hand, conform to approved shop drawings or submitted data, and are properly stored
- Reviewing appropriate activity hazard analysis, to ensure that safety requirements are met per the SSHP
- Discussing procedures for constructing the work including repetitive deficiencies and documenting construction tolerances and workmanship standards for that phase of work
- Checking to ensure that the portion of the plan for the work to be performed has been approved by the CO
- Discussing the initial control phase
- Notifying the CO at least 48 hours in advance of beginning the preparatory control phase meeting.

This phase will include a meeting conducted by the CQCSM with the superintendent, other CQC personnel (as applicable), and the foreman responsible for the definable feature. The results of the preparatory phase actions will be documented by separate minutes prepared by the CQCSM and attached to the DQCR. CAPE's CQCSM will communicate to applicable workers the results of the preparatory phase, to include materials, construction methods, workmanship standards, safety considerations and procedures, and preparatory phase meeting minutes.

3.1.2 Initial Inspection

The initial phase inspection will be performed as soon as a representative portion of the DFW has been accomplished. The initial phase will include:

- Reviewing minutes of the preparatory meeting
- Checking the preliminary work to ensure that it is in compliance with contract requirements
- Verifying full contract compliance and required control inspection and testing
- Establishing a level of workmanship and verifying that it meets minimum acceptable workmanship standards; compare with sample panels if appropriate
- Resolving all differences
- Checking safety, including compliance with and upgrading of the safety plan and activity hazard analysis
- Reviewing the activity hazard analysis with each worker

- The government will be notified at least 48 hours in advance of beginning the initial phase.

This phase shall include a meeting conducted by the CQCSM and attended by the Site Superintendent, other CQC personnel (as applicable), and the foreman responsible for the definable feature and the work crew(s) for the appropriate DFW. Separate minutes of this phase will be prepared by the CQCSM using the Record of Preparatory and Initial Inspections (located in Appendix B) and QCS. The exact location of initial phase will be indicated for future reference and comparison with follow-up phases. The initial phase will be repeated for each new crew to work on site, if work is resumed after a substantial period of work, or any time acceptable specified quality standards are not being met.

3.1.3 Follow-Up Inspection

The follow-up phase inspection will be performed routinely to ensure continuing compliance with contract requirements, including:

- QC testing
- Completion of each DFW.

A record of the follow-up inspection will be included as part of the CQC Report. A final follow-up inspection will be conducted, and any deficiencies corrected prior to the commencement of construction of a new DFW.

3.1.4 Inspection of Delivered Materials

All materials delivered to the site will be inspected for conformance to the contract plans and specifications prior to being unloaded at the site by the CQCSM. Upon acceptance of these materials, the items will be unloaded and placed in an appropriate storage area. Materials subject to damage from wind/rain will be placed indoors or under a protective covering. All materials will be placed on dunnage to avoid contact with the ground and the introduction of excess moisture. Quantities of the delivered materials will be verified against the delivery ticket during the unloading process and any discrepancies will be resolved prior to the delivery trucks departure.

3.1.5 Punch-Out Inspection

Near the completion of all work, or any increments thereof, the CQCSM will conduct an inspection of the work and develop a “punch list” of items that do not conform to the approved drawings and specifications. The “punch-list” will include an estimated date by which the deficiency will be corrected and will be included in the CQC documentation. The CQCSM will make a second inspection to ascertain that all deficiencies have been corrected and, once complete, will notify the government that the facility is ready for its “Pre-Final Inspection.”

3.1.6 Pre-Final Inspection

The CO will perform this inspection and develop a “Pre-Final Punch List.” All items will be

addressed by CAPE and notice of completion will be sent to the CO so that a "Final" inspection with the EPA can be scheduled.

3.1.7 Final Acceptance Inspection

The Final Acceptance Inspection will be formally scheduled by the CO based upon the results of the Pre-Final Inspection. Notice will be given to the CO by CAPE at least 14-days prior to the Final Acceptance Inspection, that all Pre-Final Inspection items are complete and acceptable for inspection. The CQCSM, Site Superintendent, or other primary management personnel will attend this inspection.

3.2 Testing

Numerous industry standards and field QC tests will be used to ensure that materials, equipment, and field activities are in compliance with the requirements of the Statement of Work (SOW), the CQCP, and associated addenda. The following sections describe some industry standards and tests that will be used to ensure the quality of completed project tasks.

CAPE shall perform the following testing activities and record and provide the following data:

- Verifying that testing procedures comply with contract requirements
- Verifying that facilities and testing equipment are available and comply with testing standards
- Checking test instrument calibration data against certified standards
- Verifying that recording forms and test identification control number system, including all of the test documentation requirements, have been prepared
- Results of all tests taken, both passing and failing, shall be recorded on the CQC report for the day taken.

A list of test requirements in matrix form has been included as Table 5 of this document per accordance with Specification Section 01451, paragraph 3.2.2.5. A CQC Test Report List will be used to document and track test results. A copy of the CQC Test Report List has been provided in Table 4.

3.2.1 Compaction and Density Testing

Compaction testing will be performed for all backfill/fill materials as required in *Specification Section 02300 Earthwork* paragraph 3.05 F. Common fill will be placed in 12-inch lifts and compacted to 92 percent of American Society for Testing and Materials (ASTM) D 1557 maximum dry density. Structural fill will be placed in 8-inch lifts and compacted to 95 percent maximum dry density. In confined areas where compaction will be obtained with hand-operated machine compactors, lift thickness will not exceed 4 inches loose thickness. During the pipe trenching and installation phase, density testing will be performed daily by an onsite technician. A minimum of one test will be performed per 500 (cubic yards) yd^3 of material placed, or at maximum 100-foot intervals along trenches, with at least one test per lift. Equipment will be calibrated using ASTM D 1556 at the beginning

of each working day and for each type of material encountered. Compaction and Density Testing will be conducted by a USACE-approved testing laboratory.

Prior to the use of any backfill on site, chemical testing, sieve analysis, and moisture density testing will be conducted on all proposed borrow material. All testing will be performed by an offsite laboratory. The sieve analysis will be performed in accordance with ASTM D 421 and 422 with a retest for every 3,000 yd^3 of material. Moisture density tests will be performed in accordance with ASTM D 698 with a retest for every 3,000 yd^3 of material, and no less than one test per borrow area.

3.2.2 Hydrostatic Testing

Hydrostatic testing of high-density polyethylene (HDPE) pipelines will be completed in accordance with the Contract Specifications, specifically Section 15200 of the Trench Package.

Hydrostatic testing of GTS and Pump House piping will be completed in accordance with the Specification 15051 of the GTS Package.

3.2.3 Pavement Testing

The thickness of the asphalt paving will be tested routinely to ensure that it meets the requirements of minimum 2-inch thickness shown on the Contract Drawings and is placed in accordance with the Contract Specifications Section 02550, *Asphaltic Paving*. The measured thickness shall not exceed the thickness by more than 0.5 inches. The final surface shall have a uniform texture and will conform to the required grad and cross section. Low or defective areas will immediately be corrected by saw-cutting out the faulty areas and replacing them with new material.

Sampling and testing of materials will be in accordance with the Contract Specifications, Section 02550, 1.04, Sampling and Testing, as well as applicable New Jersey Department of Transportation Standard Specifications (NJDOTSS) and ASTM standards. The sampling and testing of aggregates will be conducted in accordance with Paragraph 1.04A of the Contract Specification Section 02576. The sampling and testing of Bituminous Concrete will be conducted in accordance with Paragraph 1.04B of the Contract Specification Section 02576. The sampling and testing of Bituminous Materials will be conducted in accordance with Paragraph 1.04C of the Contract Specification Section 02576. Pavement Testing will be conducted by a USACE-approved testing laboratory.

3.2.3.1 Step Drawdown / Specific Capacity Testing

Step drawdown will be conducted during the extraction well installation process. The pump used during testing will be located at the final design elevation. Pumping shall commence at a constant rate equal to half the estimated maximum flow rate, and will continue for 2 hours. Water levels in the well will be measured and recorded during the test, at a minimum, every minute for the first 10 minutes, every 5 minutes for 10-30 minutes, and every 15 minutes for 30-120 minutes. Immediately following this step (Step 1), three additional steps will be conducted at flow rates of 1.0 (Step 2), 1.5 (Step 3), and 2 (Step 4) times the maximum

estimated yield, if each well has sufficient capacity to produce at those rates for 120 minutes per step. The water level in the well will be recorded every 15 minutes for Steps 2-4. If the pump breaks suction at a pumping rate prior to the 2 hours, subsequent steps at higher rates need not be attempted. However, the flow rate will be reduced until the water level while pumping stabilizes at least 5 feet above the pump intake and the test continued for the remainder of the 2 hours. Step-Drawdown Testing will be conducted by the drilling subcontractor.

3.2.4 Concrete Testing

The batching, mixing, transporting, placing, and curing of concrete will be subject to inspection by the CO at all times, per Contract Specification Section 03301 *Concrete and Reinforcing Steel*, paragraph 3.03. The Designer of Record will inspect the preparations for concreting including the preparation of previously placed concrete, the reinforcing steel and the alignment, cleanliness and tightness of formwork. No placement will be made without the inspection and acceptance of the CO.

Sets of field control cylinder specimens will be taken by the CO (or inspector) during the progress of the work, in compliance with ASTM C31. The number of sets of concrete test cylinders taken of each class of concrete placed each day will not be less than one set per day, nor less than one set for each 150 yd^3 of concrete nor less than one set for each 5,000 square feet (ft^2) of surface area for slabs or walls.

A “set” of test cylinders consists of four cylinders: one to be tested at 7 days and two to be tested and the strengths averaged at 28 days. The fourth may be used for a special test at 3 days or to verify strength after 28 days if 28-day test results are low.

When the average 28-day compressive strength of the cylinders in any set falls below the specified design strength or below proportional minimum 7-day strengths (where proper relation between 7- and 28-day strengths have been established by tests), proportions, water content, or temperature conditions will be changed to achieve the required strengths.

CAPE will cooperate in the making of tests by allowing free access to the work for the selection of samples, providing an insulated closed curing box for specimens, affording protection to the specimens against injury or loss through the operations, and furnish material and labor required for the purpose of taking concrete cylinder samples.

Slump tests will be made in the field immediately prior to placing the concrete. Such tests will be made in accordance with ASTM C143. If the slump is greater than the specified range, the concrete will be rejected.

Tests for air content will be made on fresh concrete samples. Air content for concrete made of ordinary aggregates having low absorption will be made in compliance with either the pressure method complying with ASTM C231 or by the volumetric method complying with ASTM C173. If lightweight aggregates or aggregates with high absorptions are used, the latter test method will be used.

Finished surfaces will not deviate from testing edge of a 10-foot straightedge by more than

1/8” from the intended surface, as defined in Section 03301, *Concrete and Reinforcing Steel*.

3.2.5 Submersible Pump Field Testing

The submersible pumps will be field tested per the manufacturer’s specifications. The test will be conducted to establish the actual load and flow characteristics of the pump as installed. Process startup testing will demonstrate that the equipment operates without overheating and without excessive vibration or noise. Submersible Pump Field Testing will be conducted by the drilling subcontractor.

3.2.6 Hydraulic Testing of Groundwater Treatment Facilities

Once all relevant systems have been documented and accepted by the CO as mechanically complete, CAPE will conduct a hydraulic test on the systems consisting of operating the facility at the maximum design flow rate for at least 2 continuous hours using potable water. During the test, all system components, including tanks, pumps, piping, valves, meters, level controls, and connections will be inspected to confirm that no system components leak and that the system performs correctly. Any observed deficiencies will be corrected and the system will be retested after the repairs have been made. The hydraulic testing will not be deemed complete until the system has operated under normal operating conditions without any leaks or other related deficiencies for 2 consecutive hours. Water used during such testing will be discharged to surface water outfall.

3.2.7 Motor Tests and Checks

All motors will be field-tested and checked per the requirements of Contract Specification Section 01121, *Electric Motors to 250 HP*. Motor Tests and Checks will be conducted by a certified electrician. Field Testing and commissioning shall be done in accordance with the latest revision of NETA Standards ATS-1995.

CAPE will megger (1,000 volts DC) each motor winding before energizing the motor and if insulation resistance is found to be low, will notify the CO and will not energize the motor. The following table gives minimum acceptable insulation resistance in megohms at various temperatures and for various voltages with readings being taken after 1 minute of megger test run.

Winding Temperature		**Voltage**		
°F	**°C**	**115V**	**230V**	**460V**
37	3.9	60	108	210
50	10	32	60	120
68	20	13	26	50
86	30	5.6	11	21
104	45	2.4	4.5	8.8
122	50	1	2	3.7
140	60	0.50	0.85	1.6

CAPE will check all motors for correct clearance, alignment, and lubrication, and will

lubricate if required in accordance with manufacturer's instructions. CAPE will check direction of rotation of all motors and reverse connections if necessary. The correction for wrong rotational direction will be made at the motor.

CAPE will provide to the CO a typed list of all motors 1 HP and larger listing the no load motor current and voltage and the full load current and voltage. Any phase current imbalance greater than 10 percent will be reported to the CO.

3.2.8 Electrical Distribution Field Testing

Electrical Distribution Field Testing will be performed by the subcontracted electrician as required by Contract Specification 16375, *Electrical Distribution System, Underground,* paragraph 3.8. Electrical Distribution Field Testing will be conducted by a certified electrician.

3.3 Standards

Analytical testing, materials of construction, and equipment supplied will conform to the following recognized standards, as appropriate: ASTM; the American Petroleum Institute (API); the American Water Works Association (AWWA); the American Welding Society (AWS); the National Electrical Manufacturers Association (NEMA); National Fire Protection Association (NFPA); the EPA and associated addenda. All testing used to verify conformance to specific standards will be performed using properly calibrated equipment and following recognized standard operating procedures (SOPs).

The need for additional testing will be determined by the PM and the CQCSM, based on a detailed review of the quality of construction and test results. The testing performed by suppliers may be verified by additional testing by CAPE, if it is determined to be necessary based on the supplier's certification and material inspection.

If the CQC system identifies that any part of the construction has deficiencies and/or does not meet the requirements of the base specifications and SOW, corrective actions will be implemented until control measures are found to be adequate by the CQCSM and the USACE onsite representative. Deficiencies and corrective actions will be recorded in the CQC documentation.

4.0 PROJECT MEETING

4.1 Project Meeting

As required by job site events, the CQCSM will conduct periodic meetings, including:

- Preconstruction meetings
- Monthly coordination meetings
- Weekly progress reports
- Problem resolution meetings.

4.1.1 Preconstruction Meeting

The CQCSM and CAPE's management personnel and subcontractors will attend a preconstruction meeting before initiation of major work components. The purpose of the meeting is to:

- Provide each organization with all relevant CQC documents
- Discuss details of the above documents
- Determine if changes are necessary based on site conditions
- Review the responsibilities of each organization
- Review the lines of authority and communication
- Discuss the inspection program
- Discuss the protocol and procedures for testing
- Discuss the protocol and procedures for retesting
- Review documentation requirements
- Review documentation distribution and storage
- Review work area security and safety
- Document hazardous waste site safety training.

The meeting minutes will be prepared by the CQCSM and will be minutes transmitted to the organizations involved.

4.1.2 Monthly Coordination Meetings

Monthly coordination meetings will address schedule updates and payment requests as well as the QCS. The meetings will be documented in writing by the CQCSM. Meeting records will be available for review at the CAPE site office.

4.1.3 Weekly Progress Report

Weekly progress meetings will be held to review activities and accomplishments. The meetings will be brief and to the point, and any questions that arise will be addressed. The meetings will be documented in writing by the CQCSM. Meeting records will be available for review at the CAPE site office.

4.1.4 Problem Resolution Meeting

Problem resolution meetings will be held when special conditions warrant. They will be attended by at least the CQCSM and the related contractor personnel. The purpose of the meeting will be to define and discuss a problem, review solutions, and select an appropriate solution. The meeting will be documented by the CQCSM, and transmitted to the appropriate organizations.

5.0 REPORTING AND DOCUMENTATION

Data and contract information will be communicated between the USACE and CAPE through the use of the RMS/QCS system. Administrative functions will include the tracking of pay activities and progress payments, an updated submittal register and transmittal log, daily reports, three-phase checks, activity schedules, and safety guidelines. Imports/exports between CAPE and the USACE will occur on a weekly basis (minimum) or other specified time period as mutually agreed upon.

5.1 Contractor Quality Control Reports

CAPE will maintain daily records and submit DQCRs. The reports will be factual records containing numerical data of the contractor's daily QC activities and resulting actions. The reports will be submitted to the USACE authorized representative or their designated representative using the DQCR form presented in Appendix B.

The DQCR will contain a record of inspections for all work accomplished subsequent to the previous work. Separate reports for different phases of work may be submitted by the responsible QC inspectors, or the reports may be consolidated into one report if all QC activities and results are covered, and the responsible QC inspectors are identified in the consolidated report. In all cases, the report(s) will be reviewed, verified, and signed by the CQCSM. The verification will contain the statement that all supplies and materials incorporated in the work are in compliance with the terms of the contract, except as noted.

Each DQCR will include the following information:

- Phase(s) of construction underway during the time of the report
- Type, number, and locations of inspections performed
- Results of inspections, including the nature of the deficiencies observed, and the corrective actions taken (or to be taken)
- Report of tests performed with the results of the tests, including failures, the specification requirement, and any tolerance (where applicable), and RA taken or to be taken. Test results, including all computations, will be attached to the report. When test results cannot be completed by the time the report is submitted, a notation will be made that the test was performed and the approximate date the test results will be available. Delayed test results will be submitted with the DQCR on the date received
- Other information as applicable to the project, such as:
  - Weather conditions
  - Subcontractor operations
  - Monitoring of materials and equipment upon arrival at the project site for compliance with approved shop drawings, damage during transit, and proper storage
  - Offsite surveillance activities

- Job safety
- Daily manpower/equipment report showing the cumulative manpower totals and the daily equipment inventory
- Sediment and erosion control inspection results.

5.2 Submittals

Submittals will group into preconstruction submittals, shop drawings, product data, samples, or administrative submittals.

Preconstruction submittals will consist of work plans and a schedule.

Shop drawings will be prepared to show intended methods of construction. Drawings will be accompanied by calculations, mix designs, analyses, or other data used to determine product selection or design the part of the work. Each drawing will be specifically prepared to illustrate some portion of the work.

Product data will consist of catalog cuts; illustrations; schedules; diagrams; performance charts; instructions; and brochures illustrating size, the physical appearance, and other characteristics of materials or equipment for some portion of the work.

Samples will be physical examples of materials, equipment, or workmanship that illustrate functional and aesthetic characteristics of a material or product and establish standards by which the work will be judged.

The CQCSM or CQC task manager will review all submittals and certify that submittals are in compliance with contract requirements. This includes but is not limited to: a review of the design to ensure that it will comply with the specified performance criteria; and a review of all pre-engineered systems to ensure designs are coordinated with all other aspects of the project and proper interfaces are maintained. The CQSSM will perform the following tasks:

- ▲ Transmiting submittals in accordance with the schedule on an approved Submittal Register
- ▲ Advising USACE COR of variations
- ▲ Correcting and resubmitting submittals as directed by approving authority
- ▲ Furnishing additional copies of the submittal when requested by the COR
- ▲ Ensuring that no work has begun until submittals for that work have been returned as “approved” or “approved as noted.”

Submittals will be identified using the “Construction Contractor Module” of the Resident Management System (RMS), referred to as the QCS, to record, maintain, and submit information throughout the contract period. Each submittal will have a unique identifier based on the specification sections and item number. Each submittal will be transmitted to the USACE with an ENG Form 4025. The transmittal form will identify the following:

- Project title and location
- Construction contract number
- Section number of the specification section by which the submittal is required
- Submittal description number of each component of the submittal
- When a resubmission, add the alphabetic suffix on the submittal description.

Variations from the contract will be discussed with the USACE CO or COR before submission. This will ensure functional and quality requirements are met and minimize rejections and resubmittals. Formal variations will consist of a written request with documentation of the nature and feature of the variation and an explanation of why the variation is desirable or beneficial to the government. Included in the variation documentation will be submittals required for the variation. Variations will be clearly marked on all documentation.

The CQCSM will submit six copies of each submittal to the USACE. The scheduling of submittals will be conducted through the RMS/QCS system. Once the submittal register is input into the system, it is linked with the contract schedule, producing a submittal register, complete with dates.

Approving authority on submittals falls to the CQCSM, unless otherwise specified for a specific submittal. Submittals listed on the Submittal Register with the notation "G" indicate the USACE CO or COR is the approving authority for that submittal item.

5.3 Submittal Register

The submittals will be tracked using the Submittal Register provided in the RD package prepared by CDM. The Submittal Register will be uploaded to RMS. Appendix C provides the Submittal Register with each DFW on ENG Form 4288. All items shown on the Submittal Register will be submitted to the government using ENG Form 4025. A copy of ENG FORM 4025 is located in Appendix D.

5.4 Deficiency Tracking System

The CAPE QC process will identify deficiencies throughout the project. These deficiencies will be tracked using the QCS system. A list of deficiencies will be numerically tracked using the QC punch list items in the QCS database. The QCS punch list module gives CAPE a means to communicate to the USACE comments resulting from an inspection, site visit, or various other reviews. This communication is a record keeping system, also referred to as a Deficiency Tracking System. In addition to the QCS/RMS tracking system, CAPE will also maintain a written log of noted deficiency and punch-list items on a Master Deficiency List (Table 3).

The USACE will log the deficiencies it has identified using its QA punch list items. The QA Punch List Items gives the USACE a means to communicate any noted deficiencies to CAPE.

Using the Punch List Items function in RMS, the government can draw CAPE's attention to an overlooked item. As the comment is issued as an action item, the comment is placed on

the QC list to be corrected by CAPE, reported as corrected by CAPE, and then verified by the USACE. The USACE's QA punch list items will be included in its export file to CAPE. CAPE will acknowledge receipt of these QA punch list items by specific number reference on the DQCR. CAPE will update the correction status of both QC and QA punch list items on a bi-weekly basis.

5.5 Inspections and Review Documentation

CAPE will maintain current records providing factual evidence that required CQC activities and/or tests have been performed. The records will include the work of subcontractors and suppliers and will be recorded on the applicable forms, DQCR, List of Deficiencies CQC Test Report List, and Record of Preparatory and Initial Inspections that include, at a minimum, the following information:

- Contractor/Subcontractor and their area of responsibility
- Operating plant/equipment with hours worked, idle, or down for repair
- Work performed each day with given location, description and by whom
- Test and/or control activities performed with results and references to Contract documents. Control phase identified with listed deficiencies and corrective action
- Materials received with statement as to acceptability, storage, and reference to Contract Documents
- Submittals reviewed with contract reference, by whom, and action taken
- Offsite surveillance activities, including actions taken
- Job safety evaluations and corrective actions
- Instructions given/received and conflicts in the Contract Documents
- Contractor's verification statement.

All inspections will be recorded on the DQCR. The preparatory, initial, and follow-up inspections will be detailed on this report, and additional report pages will be generated, as needed. These reports will be used to track deficiencies and corrective actions. Any deficiencies that cannot be corrected at the time of discovery by the person making the discovery or that otherwise affect the quality or schedule of other work must be treated as a noncompliance condition.

The completed reports will be reviewed by the CQCSM and Site Superintendent, and distributed according to the distribution requirements, thus becoming a permanent part of the site CQCP records. The reports are generated through the RMS/QCS system. A hard copy of the report will be printed and signed by the CQCSM for submission and will be tracked electronically through the RMS/QCS system.

5.6 As-Built Drawings

All data received throughout the course of the project regarding specific as-built information will be incorporated into the as-built drawings on a regular basis to accurately reflect in-the-

field conditions. This data will be compiled and input into the final as-built drawings which will be submitted upon completion of the project.

FIGURES

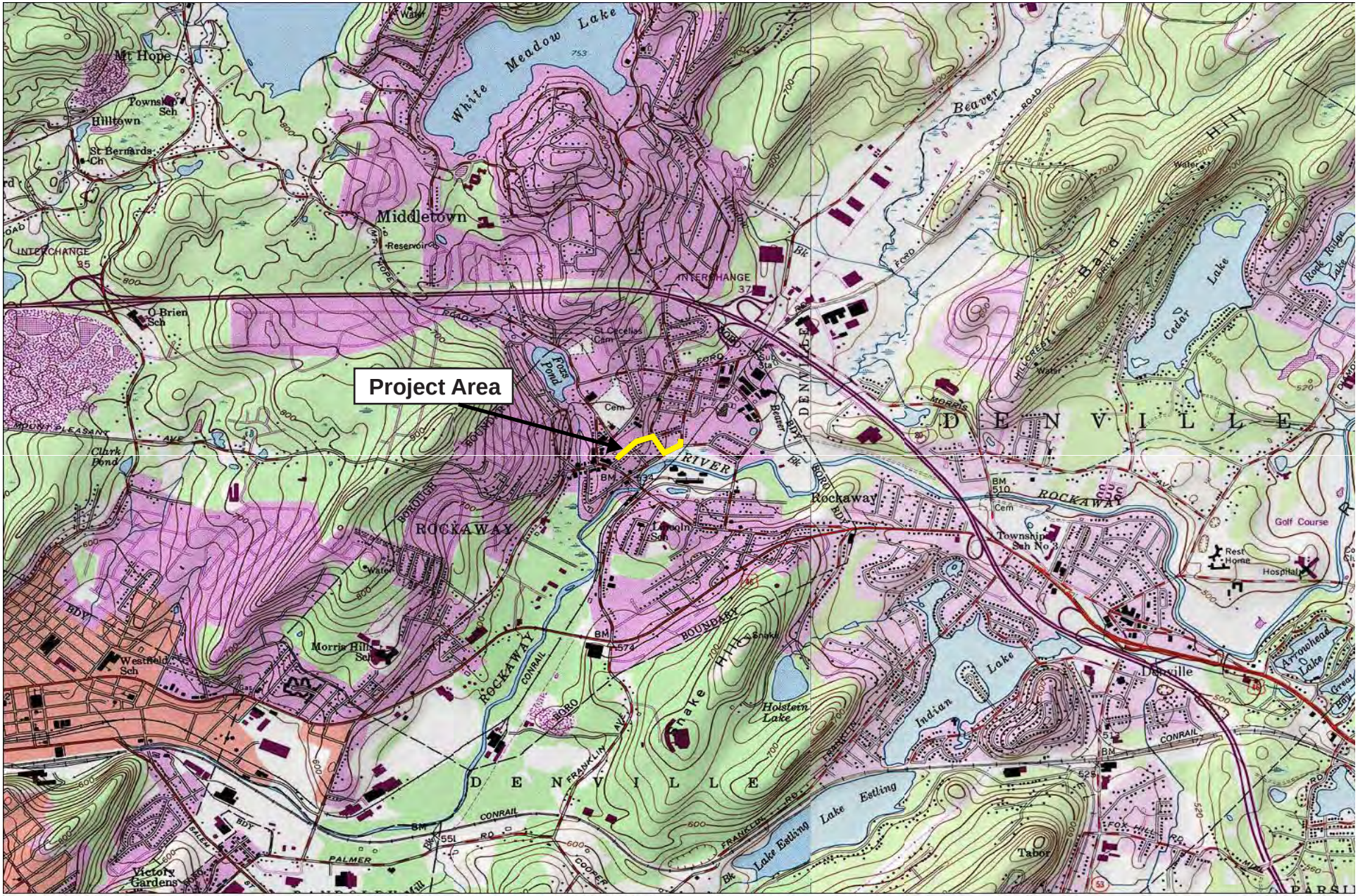

Map created with TOPO!® ©2002 National Geographic (www.nationalgeographic.com/topo)

Figure 1

Site Location Map

Rockaway Borough Superfund Site

East Main/Wall Street Plume Remediation

Morris County, NJ

CAPE

FIGURE 2
Organization Chart
Rockaway Borough Well Field Site Groundwater Treatment System

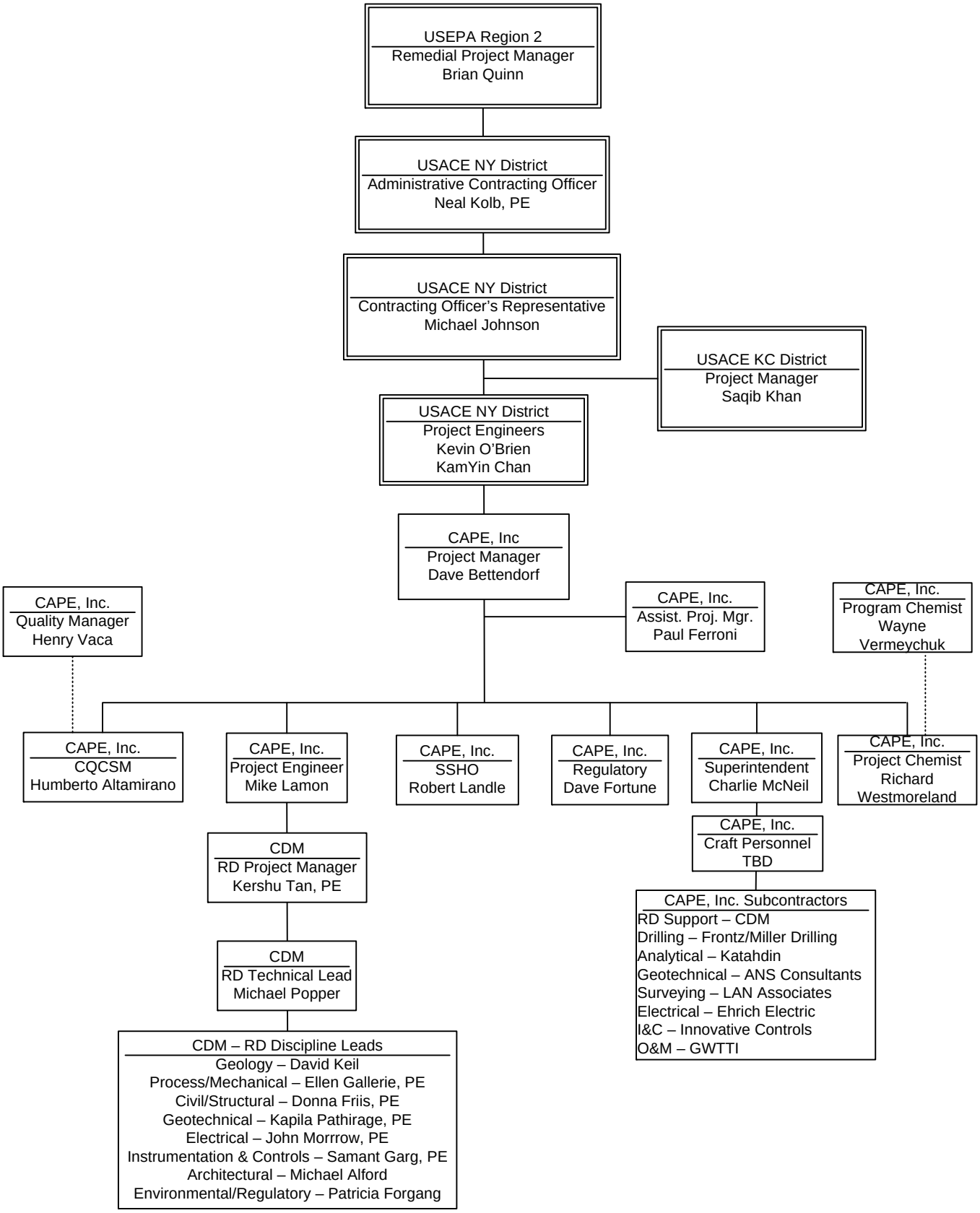

TABLES

TABLE 1

Specification Crosswalk

TABLE 1 - SPECIFICATION CROSSWALK

SPECIFICATION NO. AND TITLE	PKG
01045 - Cutting Coring and Patching	CDM
01060 - Regulatory Requirements	USACE
01145 - Pipeline Testing and Cleaning	CDM
01170 - Special Provisions	CDM
01171 - Electric Motors to 250 HP	CDM
01172 - Pipe Penetrations	CDM
01201 - Pre-Construction and Pre-Work Conferences	USACE
01202 - Project Progress Meetings	USACE
01203 - Job Site Administration	USACE
01270 - Measurement and Payment	USACE
01312 - Quality Control System (QCS)	USACE
01320 - Project Schedule	USACE
01330 - Submittal Procedures	USACE
01351 - Safety, Health, and Emergency Response	USACE
01355 - Environmental Protection	USACE
01380 - Project Photographs	USACE
01381 - Videotaping	USACE
01450 - Chemical Data Quality Control	USACE
01451 - Contractor Quality Control	USACE
01550 - Surveying	USACE
01580 - Signs	USACE
01720 - Project Record Documents	USACE
01730 - Operation and Maintenance Data	CDM
01735 - Project Closeout	USACE
01740 - Warranties and Bonds	CDM
02100 - Site Preparation	CDM
02120 - Offsite Transportation and Disposal	CDM
02300 - Earthwork	CDM
02550 - Asphaltic Pavement	CDM
02616 - Ductile Iron Pipe and Fittings	CDM
02622 - Plastic Pipe	CDM
02640 - Buried Valves	CDM
02821 - Metal Fence and Gates	CDM
02950 - Loaming and Hydroseeding	CDM
03301 - Concrete and Reinforcing Steel	CDM
03320 - Flowable Fill	CDM
03410 - Precast Concrete Structures	CDM
03511 - Sidewalks and Curbs	CDM
05500 - Miscellaneous Metal	CDM
09901 - Surface Preparation and Shop Prime Painting	CDM

TABLE 1 - SPECIFICATION CROSSWALK

SPECIFICATION NO. AND TITLE	PKG
11350 - Remvable Tray Air Stripper	CDM
11396 - Vapor Phase Granular Activated Carbon Adsorbers	CDM
13305 - Control Sequences	CDM
13420 - Instruments	CDM
13431 - Control Panels	CDM
13451 - Programmable Controllers	CDM
13452 - SCADA Computer System	CDM
15051 - Piping - General Requirements	CDM
15063 - Copper Pipe and Tubing	CDM
15064 - Plastic Pipe and Fittings	CDM
15072 - Ductile Iron Pipe and Fittings	CDM
15100 - Valves	CDM
15120 - Piping Specialties	CDM
15250 - Thermal Insulation	CDM
15500 - HVAC	CDM
16000 - Electrical - General Provisions	CDM
16110 - Raceways, Boxes, Fittings, and Supports	CDM
16120 - Wires and Cables (600V Maximum)	CDM
16122 - Fiberoptic Cable	CDM
16141 - Wiring Devices	CDM
16191 - Miscellaneous Electrical Equipment	CDM
16375 - Electrical Distribution System, Underground	CDM
16470 - Panelboards	CDM
16482 - Variable Frequency Drive Controllers	CDM
16502 - Lightning Protection Design	CDM
16600 - Underground System	CDM
16660 - Grounding System	CDM
16720 - Integrated Fire and Security Alarm Panel	CDM

TABLE 2

Preparatory and Initial Inspection

Schedule

TABLE 2

PREPARATORY AND INITIAL INSPECTION SCHEDULE
Rockaway Borough Wellfield Superfund Site, Morris County, NJ

DEFINABLE FEATURE OF WORK	PREPARATORY INSPECTION		INITIAL INSPECTION	
	Scheduled Date	Actual Date	Scheduled Date	Actual Date
Mobilization and Site Preparation				
Pump House Demolition				
Transportation and Disposal				
GW-1 Bypass				
GTS Building Construction				
GTS System Construction				
Extraction Well Installation				
Groundwater Sampling				
Forcemain Installation				
Creating Flood Storage				
Startup/Performance Testing of GTS				
Site Restoration and Demobilization				

TABLE 3

Master Deficiency List

TABLE 3

MASTER DEFICIENCY LIST

Item Number	Description of Deficiency	Date Noted	CQC Corrective Action Date	USACE QA Verification Date

TABLE 4

CQC Test Report List

TABLE 4
TEST MATRIX TABLE

Test Type	GTS Specification Section	Responsible Party	Associated DFW	Test Standard and Frequency
Motors - insulation resistance test & phase rotation test	01171, para 3.01 D	CAPE & Certified Electrician	GTS System Construction	Per manufacturer's instructions during field commissioning
Pipeline Testing (Exfiltration, Low Air Pressure, Pressure)	01445, para 3.03, 3.04	CAPE	Forcemain Installation	ASTM C828 & AWWA C600
Backfill and Topsoil Testing	02300, para 1.04, 3.05F	CAPE & Subcontracted Certified Testing Lab	Forcemain Installation and GTS Building Construction	a) Grain size analysis & modified proctor - ASTM D 422 and ASTM D 1557; once per 3,000 CY and at least once per borrow area
				b)Chemical analysis - NJAC 7:26; once per 5,000 CY and at least once per borrow area
				c) Compaction test - once per 500 CY or at least once per lift; for trenches, once every 100 LF or once per lift
Backfill Lift Thickness	02300, para 3.05 B	Contracting Officer	Forcemain Installation	once per 3,000 SF surface area placed or at least once per lift; for trenches, once every 100 LF or once per lift
Asphalt Pavement Testing	02550, para 1.04	CAPE & Subcontracted Certified Testing Lab	Site Restoration and Demobilization	a) Aggregate test - ASTM D 75 and NJDOTSS 901
				b) Bituminous concrete mix test - NJDOTSS 903.03
				c) Bituminous materials test - ASTM D 140 and NJDOTSS
Asphalt Pavement Thickness & Smoothness	02550, para 3.13 B	CAPE	Site Restoration and Demobilization	Routine testing for final, finished surfaces
Ductile Iron Pipe Hydrostatic Testing	02616, para 3.04	CAPE	Forcemain Installation	AWWA C600; after installation
Gravity Plastic Pipe Deflection Testing	02622, para 3.04	CAPE	Forcemain Installation	After backfilling is complete
Valves Functionality Testing	02640, para 3.04	CAPE	Startup/Performance Testing of GTS	Once for each valve, including actuator and valve control equipment
Topsoil Testing	02950, para 2.01 B1	Rutgers Co-op or other lab	Site Restoration and Demobilization	At least 10 days prior to beginning topsoil activities
Soil Fertilization Testing	02950, para 3.03 D	CAPE & Subcontracted Certified Testing Lab	Site Restoration and Demobilization	After Final Inspection but before Provisional Acceptance
Concrete Testing	03301, para 3.07	CAPE & Subcontracted Certified Testing Lab	GTS Building Construction	a) Test Cylinders – ASTM C 31, ASTM C 39; immediately prior to placement; at least -one set per day, one set per 150 CY of concrete or one set per 5,000 SF of surface area for slabs or walls
				b) Slump Test – ASTM C 143; immediately prior to placement
				c) Air Test – ASTM C 173 and ASTM C 231; immediately prior to placement
Precast Concrete Leakage Test	03410, para 3.02	CAPE	Forcemain Installation and GTS Building Construction	Once for each concrete structure, after assembly
Sidewalk Concrete Testing - Finished Edge	03511, para 3.03 D	CAPE	Site Restoration and Demobilization	After construction of sidewalks is completed
Vapor Phase Carbon Adsorber Field Test	11396, para 3.02 B	Manufacturer's shop inspector	Startup/Performance Testing of GTS	After installation and inspection, for each tank
Control Panel actory Acceptance Test	13431, para 3.2	Manufacturer, in presence of USACE Engineer	Startup/Performance Testing of GTS	Prior to delivery and acceptance of control panels
Programmable Controllers Functionality Test	13451, para 3.3 & 3.5	CAPE & USACE Engineer	Startup/Performance Testing of GTS	After installation
SCADA Functionality Test	13452, para 3.3	CAPE & USACE Engineer	Startup/Performance Testing of GTS	After installation
Pipe Testing	15051, para 3.07 & Hydrostatic Test and Pressure Test Sections	CAPE	Forcemain Installation and GTS Building Construction	After installation and prior to placing in service
Plastic Piping Testing	15064, para 3.02	CAPE	Forcemain Installation and GTS Building Construction	At least 8 hours after installation, and after cooling and curing of all joints

TABLE 4
TEST MATRIX TABLE

Test Type	GTS Specification Section	Responsible Party	Associated DFW	Test Standard and Frequency
Valve Functionality Test	15100, para 3.03	CAPE	GTS Building Construction	After installation and prior to startup, for each valve
HVAC Testing & Balancing	15500, para 2.07 & 3.03	Competent personnel employed by an agency that has at least two test and balance engineers certified by the AABC or NEBB	Startup/Performance Testing of GTS	After installation and prior to final acceptance
Wire & Cable Testing	16120, para 3.02 J 12 & 3.06	CAPE & Certified Electrician	Startup/Performance Testing of GTS	Test insulation after installation and prior to termination; NETA Standard ATS-1999
Fiberoptic Cable Functionality Testing	16122, para 3.05	CAPE & Certified Electrician	Startup/Performance Testing of GTS	After cable installation
Alarm Panel Testing	16191, para 3.02	CAPE & Certified Electrician	Startup/Performance Testing of GTS	Before supplying power to the alarm panels
VFD Controllers Testing	16482, para 3.02	CAPE & Certified Electrician	Startup/Performance Testing of GTS	Prior to calling in manufacturer's rep for testing and adjustment
Grounding and Bonding System Testing	16660, para 3.02	CAPE & Certified Electrician	Startup/Performance Testing of GTS	After installation
Fire and Security Alarm Panel Testing, Functionality Testing	16720, para 3.01 C & D, 3.03	CAPE & Certified Electrician & Manufacturer's Representative	Startup/Performance Testing of GTS	Upon completion of installation
Fire and Security Alarm Panel Performance Testing	16720, para 3.04	CAPE	Startup/Performance Testing of GTS	NFPA 72 and AHJ Regulations

TABLE 5

Testing Matrix Table

TABLE 5
TESTING MATRIX TABLE

Test Type	GTS Specification Section	Responsible Party	Associated DFW	Test Standard and Frequency
Motors - insulation resistance test & phase rotation test	01171, para 3.01 D	CAPE & Certified Electrician	GTS System Construction	Per manufacturer's instructions during field commissioning
Pipeline Testing (Exfiltration, Low Air Pressure, Pressure)	01445, para 3.03, 3.04	CAPE	Forcemain Installation	ASTM C828 & AWWA C600
Backfill and Topsoil Testing	02300, para 1.04, 3.05F	CAPE & Subcontracted Certified Testing Lab	Forcemain Installation and GTS Building Construction	a) Grain size analysis & modified proctor - ASTM D 422 and ASTM D 1557; once per 3,000 CY and at least once per borrow area
				b)Chemical analysis - NJAC 7:26; once per 5,000 CY and at least once per borrow area
				c) Compaction test - once per 500 CY or at least once per lift; for trenches, once every 100 LF or once per lift
Backfill Lift Thickness	02300, para 3.05 B	Contracting Officer	Forcemain Installation	once per 3,000 SF surface area placed or at least once per lift; for trenches, once every 100 LF or once per lift
Asphalt Pavement Testing	02550, para 1.04	CAPE & Subcontracted Certified Testing Lab	Site Restoration and Demobilization	a) Aggregate test - ASTM D 75 and NJDOTSS 901
				b) Bituminous concrete mix test - NJDOTSS 903.03
				c) Bituminous materials test - ASTM D 140 and NJDOTSS
Asphalt Pavement Thickness & Smoothness	02550, para 3.13 B	CAPE	Site Restoration and Demobilization	Routine testing for final, finished surfaces
Ductile Iron Pipe Hydrostatic Testing	02616, para 3.04	CAPE	Forcemain Installation	AWWA C600; after installation
Gravity Plastic Pipe Deflection Testing	02622, para 3.04	CAPE	Forcemain Installation	After backfilling is complete
Valves Functionality Testing	02640, para 3.04	CAPE	Startup/Performance Testing of GTS	Once for each valve, including actuator and valve control equipment
Topsoil Testing	02950, para 2.01 B1	Rutgers Co-op or other lab	Site Restoration and Demobilization	At least 10 days prior to beginning topsoil activities
Soil Fertilization Testing	02950, para 3.03 D	CAPE & Subcontracted Certified Testing Lab	Site Restoration and Demobilization	After Final Inspection but before Provisional Acceptance
Concrete Testing	03301, para 3.07	CAPE & Subcontracted Certified Testing Lab	GTS Building Construction	a) Test Cylinders – ASTM C 31, ASTM C 39; immediately prior to placement; at least -one set per day, one set per 150 CY of concrete or one set per 5,000 SF of surface area for slabs or walls
				b) Slump Test – ASTM C 143; immediately prior to placement
				c) Air Test – ASTM C 173 and ASTM C 231; immediately prior to placement
Precast Concrete Leakage Test	03410, para 3.02	CAPE	Forcemain Installation and GTS Building Construction	Once for each concrete structure, after assembly
Sidewalk Concrete Testing - Finished Edge	03511, para 3.03 D	CAPE	Site Restoration and Demobilization	After construction of sidewalks is completed
Vapor Phase Carbon Adsorber Field Test	11396, para 3.02 B	Manufacturer's shop inspector	Startup/Performance Testing of GTS	After installation and inspection, for each tank
Control Panel actory Acceptance Test	13431, para 3.2	Manufacturer, in presence of USACE Engineer	Startup/Performance Testing of GTS	Prior to delivery and acceptance of control panels
Programmable Controllers Functionality Test	13451, para 3.3 & 3.5	CAPE & USACE Engineer	Startup/Performance Testing of GTS	After installation
SCADA Functionality Test	13452, para 3.3	CAPE & USACE Engineer	Startup/Performance Testing of GTS	After installation
Pipe Testing	15051, para 3.07 & Hydrostatic Test and Pressure Test Sections	CAPE	Forcemain Installation and GTS Building Construction	After installation and prior to placing in service
Plastic Piping Testing	15064, para 3.02	CAPE	Forcemain Installation and GTS Building Construction	At least 8 hours after installation, and after cooling and curing of all joints

TABLE 5
TESTING MATRIX TABLE

Test Type	GTS Specification Section	Responsible Party	Associated DFW	Test Standard and Frequency
Valve Functionality Test	15100, para 3.03	CAPE	GTS Building Construction	After installation and prior to startup, for each valve
HVAC Testing & Balancing	15500, para 2.07 & 3.03	Competent personnel employed by an agency that has at least two test and balance engineers certified by the AABC or NEBB	Startup/Performance Testing of GTS	After installation and prior to final acceptance
Wire & Cable Testing	16120, para 3.02 J 12 & 3.06	CAPE & Certified Electrician	Startup/Performance Testing of GTS	Test insulation after installation and prior to termination; NETA Standard ATS-1999
Fiberoptic Cable Functionality Testing	16122, para 3.05	CAPE & Certified Electrician	Startup/Performance Testing of GTS	After cable installation
Alarm Panel Testing	16191, para 3.02	CAPE & Certified Electrician	Startup/Performance Testing of GTS	Before supplying power to the alarm panels
VFD Controllers Testing	16482, para 3.02	CAPE & Certified Electrician	Startup/Performance Testing of GTS	Prior to calling in manufacturer's rep for testing and adjustment
Grounding and Bonding System Testing	16660, para 3.02	CAPE & Certified Electrician	Startup/Performance Testing of GTS	After installation
Fire and Security Alarm Panel Testing, Functionality Testing	16720, para 3.01 C & D, 3.03	CAPE & Certified Electrician & Manufacturer's Representative	Startup/Performance Testing of GTS	Upon completion of installation
Fire and Security Alarm Panel Performance Testing	16720, para 3.04	CAPE	Startup/Performance Testing of GTS	NFPA 72 and AHJ Regulations

APPENDIX A

RESUMES OF PROJECT STAFF

David H. Bettendorf, PG
Senior Project Manager

Why Selected? 23 years of professional experience working on environmental investigation and remediation projects as a Senior Project Manager and Senior Staff Hydrogeologist ❖ Received numerous awards and commendations from USACE

Education

- BS, Geology, University of Maryland, College Park, Maryland, 1993
- BGS, Environmental Science, University of Maryland, College Park, Maryland, 1987
- Korean Language Training, Defense Language Institute, Presidio of Monterey, California, 1980

Professional Registrations

- Professional Geologist (PG), Commonwealth of Pennsylvania, 1995, PG-002928-G

Certifications/Specialized Training

- Radiation Worker II Training, 1998
- Argonne National Laboratory's "Decontamination and Decommissioning of Research Reactors and Other Small Nuclear Facilities" Training Course, 1999
- 40-Hour Occupational Safety and Health Administration (OSHA) Hazardous Waste Operations and Emergency Response (HazWOPER) Training, 1993
- 8-Hour OSHA HazWOPER Refresher Course, 2007
- 8-Hour OSHA Health and Safety Supervisory Training Course, 1994
- 10-Hour Construction Safety Course, 1995
- Cardiopulmonary Resuscitation (CPR) Training - American Red Cross, 2001
- Immunoassay Field Sampling Training Course, 1994
- Hazardous Substance Training Course, Johns Hopkins University, 1989
- Groundwater Modeling, Maryland Department of Environment, 1989
- Medical Waste Incidents, Maryland Department of Environment, 1989
- Hazardous Materials Handling for DOT 49 Transportation Regulations, 2003/2007

Summary of Experience

Dave has 23 years of professional experience working on environmental investigation and remediation projects as a Senior Project Manager (PM) and Senior Staff Hydrogeologist. He has participated in projects with the following agencies: the U.S. Environmental Protection Agency (EPA), Agency for International Development (AID), U.S. Army Corps of Engineers (USACE), U.S. Air Force Center for Engineering and the Environment (AFCEE), the Maryland Department of Environment (MDE), and the Anne Arundel County Health Department. He has managed PCB contaminated soil excavation, building demolition, AST and UST demolition, wetland restoration and LNAPL removal projects. Dave understands the investigative, design, and remedial phases of environmental program management. Dave has managed more than $100M of remedial construction work with no OSHA recordable incidents. He is a skilled Senior PM and has extensive experience managing cost-reimbursable (CR) projects. Dave has been recognized for outstanding work by USACE, including Outstanding Projects for Tacony Warehouse demolition, Outstanding Project Team Delivery Award for the DuPont Chambers Works, New Jersey, project; the Secretary of Defense Environmental Security Award for Cameron Station, Virginia, project; and a commendation for significant contributions to the Environmental Restoration Program (ERP) for Fort Meade, Maryland, project. Dave has bachelors' degrees in geology and environmental science, and is a registered Professional Geologist in Pennsylvania.

Experience

May 01–present ***CAPE, Columbia, MD***

General Manager of Operations

Dave provides overall project direction and coordination of project activities for CAPE's remediation projects. He serves as principal project contact and liaison with the client PM, ensures the quality and timeliness of deliverables, performs schedule and budget tracking, prepares progress reports, oversees problem resolution, and implements health and safety activities.

USACE Louisville Multiple Award Remediation Contract (MARC)

- ***Caven Point Remediaiton Project, Caven Point New Jersey, $5.8M FFP/PBC, 2008-2010.*** GMO. Design/build remediation project to excavate contaminated soil and perform a groundwater study to support a No Further Action from the New Jersey Department of Environmental Regulation.
- ***USACE Louisville District MARC, MEC Removal Design, Camp Ellis, IL, 2007-2008, $2.4M FFP/CPFF/PBC.*** GMO. TO to provide institutional controls, DGM, and MMR actions for MEC at FUDS site.

USACE Baltimore Multi-Award Environmental Services Contractor

- ***Ft Meade Buried Waste Removal Project, Ft Meade MD, $8.1M FFP/PBC, 2008-2010.*** PGM. Design/build remediation project to excavate, segregate, size reduce and dispose of classified buried waste. CAPE designed a material handling process to remove large amounts of audio tape and reels from soil.

USACE Kansas City District Pre-placed Remedial Action Contract (PRAC) (2006-present)

- ***Rockaway Superfund Site, Rockaway, NJ. (2006-present)*** PM. $5.6M FFP design/build remediation project. CAPE is teamed with CDM to design and construct a groundwater treatment plant to remove and treat groundwater contaminated with chlorinated solvents. CDM is designing the system and CAPE is constructing the system.
- ***Cornell Dubilier Electronics (CDE) Superfund Site, South Plainfield, NJ. (2006-2008)*** PM. $1.6M CPFF removal of PCB contaminated soil from residential properties surrounding the CDE Plant. Replaced PM to complete field characterization and final excavation and restoration of PCB-contaminated soil from four residential properties surrounding the CDE Plant. Coordinated with the EPA Remedial Project Manager (RPM) to ensure that Region 2 met their commitments to NJDEP, including cleanup levels, schedules, and restoration activities. Overcame several technical and management challenges to complete the project on time and within budget.
- ***Brook Industrial Park Superfund Site, $4M CPFF, 2006-2007.*** PM. Remediation project involving the removal of approximately 3,800 tons of contaminated soil and debris. Project included the decontamination and re-construction of two plating pits inside an active plating facility. Worked with tenants of an active industrial facility to complete the work with minimum interference of their businesses. Met weekly with owner representative to provide a description of upcoming work. Coordinated work with RPM, Conrail, and MCUA. Worked with NJDEP to negotiate wetland restoration and repair of the restoration after a hurricane.

USACE Baltimore District, Multiple Award Remediation Contract (MARC). (3/00–present) PM. Responsible for three projects to date worth a total of $10.2M.

- ***USACE, Baltimore District, Tacony Warehouse Facility Demolition, Philadelphia, PA. (2004-2005)*** PM for $2M FFP demolition of the five multiple story Warehouse Buildings. Project included the removal of asbestos, lead based paint, utility disconnects, segregation and recycling of materials, processing of brick and concrete with crusher, and excavation, removal and disposal of RCRA characteristic hazardous soils. Project received award for accelerating schedule for the transfer of the property from the Army to developers. At the request of the Baltimore District Mr. Bettendorf presented this project at the Baltimore District SAME meeting.

- ***USACE, Baltimore District,* In Situ *Chemical Oxidation Fort Dix, NJ. (2005-2006)*** PM for $1M CPFF *In Situ* Chemical Oxidation project to remediate No. 2 Fuel Oil at Fort Dix, New Jersey. Project included the soil sampling, groundwater monitoring and the installation of temporary wells for injection of Fenton's Reagent.
- ***USACE, Baltimore District, Source Area Remediation, Fort Drum, NY, $7.5M CPFF and $2.7M FFP, 2002–2008.*** PM for two TOs for the design/build of multiphase extraction systems. The projects included the performance of a pilot study to determine system operational requirements, the installation of more than 150 wells, the construction of four treatment systems, and the O&M of the systems. Led a project team of 12 personnel to design, build, and operate the largest groundwater treatment project at Ft. Drum. Systems included air sparging (AS), multiple-phase extraction (MPE), granular activated carbon (GAC), and catalytic oxidation for contaminated air treatment, air strippers for contaminated water treatment, soil vapor extraction (SVE), and bioventing at four areas. Coordinated closely with the installation's CSX representative and Ft. Drum to ensure that the rail line remained open and unimpeded, and road closures were minimized. Received commendation from Brett Gorham, USACE Ft. Drum Resident Office: *"You and your team were extremely cooperative with our customer…It was truly a team effort resulting in quality projects delivered on time and within budget."*
- ***USACE, Baltimore District, Building Decontamination and Soil Removal, Letterkenny Army Depot, Chambersburg, PA. (2001–2002).*** PM. $3.7M CPFF remediation project involving the removal and disposal of 40,000 yards of dioxin- and lead-contaminated soil and debris from an old Property Disposal Office (PDO) scrapyard and placement of clean fill. The project also included the decontamination of three 40,000-square-foot buildings contaminated with tannin residue. The decontamination of the buildings was completed on schedule and under budget
- ***USACE, Baltimore District, Disposal of Radiologically Contaminated Debris Removal. (1/99–1/00)*** PM. $1M CPFF FUSRAP project to transport and dispose (T&D) of approximately 500 tons of radiologically contaminated debris. Project was completed on time and under budget. Radian received a letter of commendation from the USACE for outstanding performance.
- ***USACE, Baltimore District, Removal of Petroleum-Contaminated Soil, Vint Hill Farms, VA (11/01).*** PM. $250,000 project to demolish existing canopy structures and excavate and dispose of petroleum-contaminated soil at a Base Realignment and Closure (BRAC) Armed Forces Examining and Entrance Station (AFEES) gas station. Project was completed on time and under budget. CAPE received a letter of commendation from the Department of the Army for outstanding performance.
- ***USACE Baltimore District, Hart Miller Island, MD. (2003).*** Senior Technical Reviewer for $951K CPFF TO. Provided technical oversight for the screening of more than 6,000 CY of dredging spoils to identify and recover UXO- and ordnance-related items. Reviewed plans, including an Explosives Safety Plan.

Air Force Center for Engineering and the Environment

- ***AFCEE, PCB Soil Removal at SS-01 Former Brandywine DRMO Site, Andrews Air Force Base (AFB), MD, $1.9M CPFF, 2006-2008.*** PM. Removal of 6,363 tons of PCB-contaminated soils and sediments from a wetland. Restoration included 8 acres of wetland restoration, 500 linear feet of stream restoration, and habitat creation. Responsible for scope, schedule, budget, QC, and S&H compliance. Coordinated with multiple stakeholders, including AFCEE, Andrews AFB, EPA Region 3, CSX Railroad, MDE, state of Maryland, Prince George's County Health Department (PGCHD), and the EPA's Biological Technical Assistance Group (BTAG). Attesting to Dave's resourcefulness, he prepared the outline of the Interim RA Completion Report (IRACR) before starting fieldwork to ensure that all project information required was gathered in real time. This resulted in achieving remedy in place (RIP) and completing the project 2 months ahead of schedule, $150K below budget, and to a high level of safety and quality. This project received an Honorable Mention in the Restoration category at the 2007 DOD/EPA/States Region 3 Environmental Colloquium.
- ***AFCEE, Lift Station Upgrade and Repair Project, Andrews AFB, MD (05/01–present).*** PM. $1.4M project to repair and upgrade lift stations at Andrews AFB. The project includes the design/build of new lift stations and the design and installation of new collection lines.

Engineering Field Activity Northeast (EFANE), Lakehurst, NJ. (7/00–7/01) PM. Design and installation of a 16- by 10-inch-diameter double-cased, under-reamed, gravel-packed, 200-gallon-per-minute (gpm) production well to an estimated depth of 1,000 feet. The work included drilling the well and furnishing and installing the casing, well screen, gravel pack, testing, and everything necessary and incidental to the construction of the well. The work also included electric and gamma logging, sampling, chemical water analysis, and well development. During project planning research, it was identified that previous aquifer pumping tests had been conducted in the area where the new well was to be installed. These tests were on file with the New Jersey Department of Environmental Protection (NJDEP) and the New Jersey Geologic Survey. After discussions with the NJDEP, the requirements for a 72-hour pump test were waived, negating the need for installing two test wells, resulting in a savings of $190,700 to EFANE.

2005-2006 ***Conti, Frederick, MD***

Omaha Rapid Response, $20M CPFF, Homeland Security – Classified. Worked with Omaha District, Architect of the Capitol and others to provide Homeland security structures.

USACE Baltimore District, Unexploded Ordnance (UXO) Removal Project, Engineering Proving Grounds Ft. Belvoir, VA, $12M CPFF, 2004-2006. PM for the identification and removal of unexploded ordnances in support of property transferred to the Commonwealth of Virginia for the completion of the Fairfax County Parkway. The project included the preparation and submission of an ESS; the geophysical acquisition of anomalies 3 mV and above; the identification and removal of 3,925 items with 900 items requiring destruction with over 125 items blown in place; and the removal of eight mine/fuse burial pits.

USACE Baltimore District, In Situ Chemical Oxidation Ft. Dix, NJ, $1M CPFF. PM for *in situ* chemical oxidation project to remediate No. 2 Fuel Oil. Project included the soil sampling, groundwater monitoring, and the installation of temporary wells for injection of Fenton's Reagent.

Aug 93–May 01 ***Radian International/URS***

Project Manager

USACE, Baltimore District, Occoquan Bay National Wildlife Refuge Building Demolition. (4/98–4/99) PM. $550,000 project to demolish four buildings totaling 80,000 square feet. Before demolition of the buildings, all nonfriable asbestos floor tile, nonfriable asbestos roofing material, light ballast, and tubes were removed from the buildings. Project was completed on time and under budget. Radian received an "Outstanding Project Team Award" from the USACE for outstanding performance.

USACE, Baltimore District, WR Grace Decontamination and Debris Removal. (7/97–9/97) PM. FUSRAP project to sample and T&D of radiologically contaminated debris. Interacted with the MDE concerning the regulatory status of the debris.

USACE, Baltimore District, Landfill Remediation. (3/98–7/99) PM. $3.4M landfill remediation project involving the removal of unexploded ordnance (UXO) and placement of UXO safety cover. Participated in a Tier I partnering team with the USACE, EPA Region 3, MDE, and Fort Meade Environmental Office to establish project objectives, schedule, and funding.

USACE, Tulsa District. Fort Sill Groundwater Sampling, Fort Sill, OK. (3/95–1/00) PM. $2M CPFF Resource Conservation and Recovery Act (RCRA) detection groundwater monitoring program located in Fort Sill, OK. Sampled 66 monitoring wells at eight Solid Waste Management Units (SWMUs) and wrote quarterly technical reports. Reviewed historical data generated from previous work to determine if monitoring wells were properly located at the SWMUs. Successfully negotiated closure of all SWMUs with the Oklahoma Department of Environmental Quality.

USACE, Baltimore District, Cameron Station Groundwater Pump-and-Treat and Soil Vapor Extraction (SVE) System Operation and Maintenance, Alexandria, VA. (3/92–3/95) O&M of two groundwater pump-and-treat systems and one SVE system. Contaminants of concern were petroleum products and chlorinated solvents. Successfully negotiated with the Virginia Department of Environmental Quality, EPA, and the city of Alexandria a

change in the remedial endpoints for the treatment systems from EPA's Maximum Contaminant Level (MCL) to a Risk-Based Alternative Cleanup Level (ACL).

USACE, Baltimore Architect and Engineering Division, Curtis Bay Site Investigation, Curtis Bay, MD. (4/95–4/96) Site investigation under the direction of the USACE Baltimore District for the Curtis Bay Area Marine Facility. Investigation included drilling soil borings using a Geoprobe, installing monitoring wells, and collecting soil and groundwater samples to determine if a release of metals, polychlorinated biphenyls (PCBs), petroleum products, and/or septic wastes had occurred at the site.

Allied Signal, RCRA Facility Investigation (RFI), Metropolis, IL. (3/95–7/96) Project Hydrogeologist. Responsible for the implementation of field investigations involving monitoring well installation, groundwater sampling, aquifer testing, and data analysis to characterize soil and water contaminant plumes. Primary author of a Phase III RFI report. The draft Phase III RFI report was accepted as final without comment by EPA Region 5.

Military District of Washington Soil Remediation at Fort Myer, Cameron Station, and Fort McNair, VA. Field Task Manager/Project Geologist. Excavation and disposal of petroleum-contaminated soils. Used an imuno-assay field test kit to direct excavation efforts. Received a personal letter of commendation from the USACE Baltimore District for the work performed at the Fort Myer Logistics Center.

USACE, Tulsa District, Fort Sill Petroleum Contamination Delineation and the Installation of Product Recovery Wells, Lawton, OK. (6/94–1/95) Field Task Manager/Project Geologist. Overseeing the drilling of 100 soil borings and the installation of 11 monitoring wells and five recovery wells to delineate the extent of petroleum contamination and recover existing free product. The project was completed under budget and a letter of commendation was received from the USACE Tulsa District for outstanding performance on this project.

USACE, Tulsa District, Longhorn Army Ammunition Plant, Marshall, TX. (3/93–10/93) Field Task Manager/Project Geologist. Project involved the installation of soil borings and monitoring wells to determine lower boundary of an interceptor collection trench used to recover dense nonaqueous-phase liquids (DNAPLs). Also served as the field geologist during the installation of a horizontal well installed as part of a pilot study to remediate DNAPLs.

USACE New York District, Claremont Polychemical Superfund Site, Old Bethpage, NY. (7/96–7/97) Project Hydrogeologist. Responsibilities included the design and installation oversight of three 130-gpm groundwater extraction wells located in the Magothy Aquifer in Long Island, NY. Also interacted with New York Department of Environmental Protection concerning water allocation issues for the Magothy Aquifer.

USACE Baltimore District, DuPont Chamber Works, Disposal of Radiologically Contaminated Debris Removal, Deepwater, NJ, $1M CPFF. PM. Formerly Utilized Sites Remedial Action Program (FUSRAP) project to transport and dispose (T&D) of approximately 500 tons of radiologically contaminated debris. Project was completed on time and under budget. Received a letter of commendation from the USACE for outstanding performance.

Jun 92–Aug 93 ***Briggs Associates, Inc.***

Geologist

Commercial Bank, Montgomery County, MD. (792–8/93) Project Hydrogeologist. Designed and implemented a study of groundwater flow characteristics in a Central Piedmont drainage basin. Duties included maintaining geologic logs, aquifer characteristic testing, groundwater sampling, and field acquisition of physical and chemical characteristics of groundwater. Compared field data to computer-generated models using Surfer and Modflow.

Jul 89–Sep 91 ***Anne Arundel County Health Department***

Environmental Sanitarian III

Responsibilities included the oversight of the installation of potable water wells in the Magothy Aquifer located in Anne Arundel County, MD. Ensured compliance with local, state, and federal regulations; participated in hydrogeologic studies with the Maryland Department of Natural Resources concerning salt water intrusion in the Magothy Aquifer; and reviewed and signed well permits. Investigated groundwater contamination of domestic and

commercial water supplies and recommended remedial solutions. Selected well locations, prepared geologic logs, and sampled monitoring wells. Reviewed technical reports concerning the interpretation of field data in technical reports submitted by industry. Designed and maintained a database of data concerning properties with environmental problems within Anne Arundel County. Inspected landfills and sludge disposal sites to ensure compliance with county and state regulations.

1987–1989 ***Dynamac Corporation***

Junior Staff Scientist

Duties included acquisition of field equipment, maintenance of field equipment, biological and soil sampling, sample preservation, data management, and statistical analysis of data.

Agency for International Development, Sudan. Member of a four-person team sent to the Sudan to assess the environmental impacts of six different pesticides.

U.S. Environmental Protection Agency, Office of Solid Waste, Washington, DC. As Junior Staff Scientist, developed and maintained a database of analytical methods for the EPA Office of Solid Waste. Performed an extensive literature search of analytical methods for chemicals of interest to the EPA's regional laboratories.

1983–1987 ***U.S. Air Force Active Reserves***

Voice Processing Specialist

Served as a Korean linguist translating from Korean to English. One-year overseas tour at Osan AFB, Korea.

1979–1983 ***U.S. Air Force***

Voice Processing Specialist

Regulatory Experience

Dave has extensive experience working with federal and state regulators in evaluating and negotiating cleanup criteria. He has 22 years of experience working with RCRA, CERCLA, SARA, Leaking Underground Storage Tank (LUST), TSCA, CWA/Oil Pollution Act (OPA), Clean Air Act (CAA), National Oil and Hazardous Substances Contingency Plan (NCP), and other federal, state, and local regulations, and has worked in EPA Regions 2, 3, and 4, negotiating cleanup criteria with NJ, NY, MD, VA, and PA state regulators. Specifically in EPA Region 2, Dave worked with both EPA and New York State Department of Environmental Conservation (NYSDEC) regulators to achieve landfill closure and reduce the level of effort for the operation and maintenance (O&M) of several treatment systems. At Caven Point Army Reserve Center, NJ, Dave negotiated the requirements for achieving an NFA with the NJDEP.

Henry A. Vaca
Corporate Quality Assurance Manager

Why Selected? Extensive experience as a Quality Assurance Manager ❖ Prior experience working for the GSA ❖ Graduate-level education in Quality Assurance

Education

- BS, Mechanical Engineering, National University of Columbia, Bogotá, Columbia, 1981
- MS, Quality Assurance (Quality Systems Concentration), Southern Polytechnic State University, Marietta GA, 2006

Professional Registrations

- Mechanical Engineer; The Professional Council Division of Engineering and Architecture of Colombia, 01/12/1981, #25230-05981
- American Society for Quality (ASQ)-Certified Manager of Quality/Organizational Excellence (CMQ/OE), #9657ASQ-Certified Quality Auditor (CQA), 2008, #37311

Certifications/Specialized Training

- 40-Hour Occupational Safety and Health Administration (OSHA) Hazardous Waste Operations and Emergency Response (HazWOPER) Training, 2001
- 8-Hour OSHA HazWOPER Refresher Training, 2009 (current)
- U.S. Army Corps of Engineers (USACE) Construction Quality Management for Contractors Training, June 2008
- 32-Hour Environmental Sampling Field Course, April 2010
- DOT Hazardous Materials Training, March 2007
- Uniform Federal Policy for Quality Assurance Project Plant, March 2007
- Systematic Planning Process, e-learning Module, March 2007
- ASQ-Quality Auditor Refresher, 2008
- Navy Systematic Planning Process (including training on data quality objectives [DQOs]), 2007
- USAF Construction Quality Mgmt. Workshop, 2007
- ASQ – Quality Manager Refresher, 2005
- DOD – New Earned Value Management Policy (0.15 CEUs) 2005
- Air Sampling and Monitoring, Corpus Christi Army Depot

Summary of Experience

Mr. Vaca has more than 26 years of professional experience. He is a CMQ/OE and a CQA, and is the Corporate Quality Assurance/Quality Control (QA/QC) Manager responsible for designing and developing CAPE's Quality Management System, and for documenting processes and training tools used companywide. Henry is responsible for overall management of CQC and has authority to act in all matters for CAPE. He ensures compliance with CQC Plans and SOW on environmental remediation and construction projects. He is knowledgeable in using of the USACE RMS/QCS and field sampling techniques, including the use of PIDs, flame ionizing instruments, combustible gas/oxygen meters, ionizing radiation meters, XRF, and pH and conductivity meters.

Experience

AUG 2000–present ***CAPE, Atlanta, GA***

Corporate Quality Assurance Manager

Air Force Center for Engineering and the Environment (AFCEE). Contractor QC System Manager for several projects at a variety of bases:

- Andrews Air Force Base (AFB), MD – Lift Station upgrades-Phase IV, and Maintenance of oil/water separators, grease traps, and lift station wet wells.
- Columbus AFB, MS – Tank repairs and upgrades.
- Defense Fuel Supply Point (DFSP), San Pedro, CA – Repair aboveground storage tank (AST) #3 and repair underground bulk fuel storage tank 14.
- DFSP, Charleston, SC – Construct Fuel Facility addition.
- March AFB, CA – Inspect and Repair AST/Replace pipeline leak detection /Replace liquid level indicators.

QA Manager for several construction/O&M projects executed in Iraq:

- Communications and Navigation Systems, Basrah International Airport, Iraq
- Install air conditioners (A/Cs) for barracks, design/install new generators, and bathroom renovations at Buildings 37, 39, and 40, QTM Baghdad, Iraq
- Solid Waste Collection, Hazardous Waste Collection, and Wastewater Treatment Management, Kirkuk AFB, Kirkuk, Iraq – ***AFCEE, Hazardous Waste Storage, Water Treatment Plant, and Land Farming, Kirkuk Regional Air Base, Iraq, $14.7M CPFF.*** CQCSM. Developed QC plans and procedures for onsite laboratory techniques and testing of petroleum-contaminated soils being land farmed as well as effluent from water treatment plant. Worked with Kurt Gates, Rob Vinson, and Chris Caviness.
- Environmental Implementation and Base Support, Kirkuk AFB, Kirkuk, Iraq

QA Manager for several construction/remediation projects:

- Repair/Upgrade of small arms firing range at Robins AFB, GA
- Demolish and replace existing sludge thickener at the Industrial Waste Treatment Plant (IWTP) at Robins AFB, GA
- Apply Epoxy Coatings throughout 170,000sf, relocation of industrial equipment and concrete repairs at Robins AFB, GA
- Environmental Services at Former Kelly AFB, TX – ***AFCEE, Lead Remediation Kelly AFB, TX, $618K CPFF.*** CQCSM for the identification, design, and remediation of lead in paint and in soil, as well as asbestos abatement associated with military family housing as part of the Base Realignment and Closure (BRAC) turnover in accordance with EPA and OSHA requirements. Field sampling included XRF, air monitoring, and collecting asbestos samples. Established and monitored QC procedures for field sampling and onsite laboratory techniques, including XRF. Worked with Kurt Gates and Glen Mayekawa.
- Install Safe Drains and construct bowser parking area, Grissom AFB, IN.

USACE (Louisville District.). QA Manager for several projects:

- Closure of two underground missile magazines at the former Nike Missile Battery C45 in Gary, IN – ***USACE Louisville District, Former Nike Missile Battery C-45, Gary, IN, $503K CPFF.*** CQCSM for project involving closure of missile magazines. Worked with Mike Healy and Glen Mayekawa to develop and implement CQC Plan.
- Site survey and UST removal at 4 sites Chicago and Cook County, IL
- Segregation and Disposal of small Arms Ammunition Debris, Asbestos Removal, Replacement of Loading Dock, and Imhoff Tank demolition at Savannah Army Depot, Savanna IL – ***USACE Louisville District, Sa-***

vanna Army Depot, IL, $572K FFP. CQCSM for project involving segregation and disposal of small arms ammunition debris, asbestos removal, replacement of loading dock, and tank demolition. Project included using onsite laboratory techniques, including XRF for analyzing lead in soil and TNT screening using Immunoassay. Exempted the waste from the RCRA "contained-in" rule and gained acceptance to dispose of the soil at a local landfill as nonhazardous special waste, resulting in a net savings of $160K. Worked with Mike Healy, Charlie Williams, and Chris Caviness.

- UST removals and electrical transformer disposal at Former Nike C-47, Hobart, IN – ***USACE Louisville District, Former Nike C-47, Hobart, IN.*** CQCSM for project involving UST removals and electrical transformer disposal. Worked with Mike Healy and Glen Mayekawa to develop and enforce the CQC Plan.
- Removal of former post hospital, building 209 with option to remove barracks, building 311 at Fort Wayne, Detroit, Wayne County, MI.
- ***USACE Louisville District, Various FUDS Sites, IL and IN, $2.2M CPFF/FFP.*** CQCSM for multiple projects involving UST removals and electrical transformer disposal. Developed and enforced the CQC Plan. Worked with Mike Healy and Glen Mayekawa.

USACE (Omaha District.). QA Manager for several projects:

- Remedial Action for the correction of encroachment at Landfill-02, Nellis AFB, NV
- Hydrant Fuels Pool A contract: API 653 Tank construction repairs and coatings at Andrews AFB, Dover AFB, Fort Drum, Fort Campbell, Fort Hood, Sheppard AFB, Dyess AFB, McConnell AFB, Grand Forks AFB, Ellsworth AFB, Fort McCoy, Volk Field, Creech AFB, Tonopah test range, Fort Lee, Arnold AFB, Birmingham ANGB – ***USACE Omaha District, Hydrant Fuels Pool A Contract, $95M FFP.*** CQCSM for API 653 Tank construction repairs and coatings at Andrews AFB, Dover AFB, Ft. Drum, Ft. Campbell, Ft. Hood, Sheppard AFB, Dyess AFB, McConnell AFB, Grand Forks AFB, Ellsworth AFB, Ft. McCoy, Volk Field, Creech AFB, Tonopah test range, Ft. Lee, Arnold AFB, and Birmingham ANGB. Responsible for developing and monitoring QC plans and procedures. Worked with Mike Healy, Steve Scavone, Glen Mayekawa, and Wayne Vermeychuk.
- Hydrant Fuels Pool D contract: Hunter AAF, Dyess AFB, Fairchild AFB, and Fort Hood.

USACE (Tulsa District.). CQCSM:

- ***USACE Tulsa District, Little Rock AFB, AR, $5.6M FFP PBC.*** Reviewed CQC Plan for PBC project involving environmental investigation, design, and construction for six sites. The PBC objectives included achieving cleanup criteria for TPH and RCRA metals constituents, including USACE and USAF concurrence, as well as receiving NFA documents from the ADEQ. Worked with Kurt Gates, Charlie Williams, Glen Mayekawa, Chris Caviness, and Tom Strader.

USACE (Baltimore District.). CQCSM:

- ***USACE Baltimore District, Source Area Remediation, Ft. Drum, NY, $2.7M FFP.*** Developed CQC Plan for construction of remedial systems at Site 1795. Worked with PM Dave Bettendorf to address USACE comments.

USACE (Kansas City District.). CQCSM for several projects:

- ***USACE Kansas City District, RHMW/MTHD, Skillman, NJ, $369K FFP.*** Developed and enforced CQC Plan for Long-Term Response Action (LTRA) for the groundwater remediation systems. Worked with Mike Healy and Chris Caviness.
- ***USACE Kansas City District, CDE Superfund Site, NJ, $1.6M CPFF.*** Performed QC audits for removal of 2,300 tons of PCB-contaminated soil from four residential/commercial properties. Audits included a review of field project documentation. (Dave Bettendorf)
- ***USACE Kansas City District, Brook Industrial Superfund Site, Bound Brook, NJ, $3.9M CPFF.*** Alternate CQCSM. Provided QC oversight for RA of VOC-, chlorinated solvents-, and metal-contaminated stream and pits associated with former metal plating operations at an active industrial facility. Provided temporary over-

sight while primary CQCSM was on vacation. QC activities included responsibility for compliance with SOW, including chemical and geological activities. Worked with Kurt Gates, Dave Bettendorf, Ken Beatty, Glen Mayekawa, and Chris Caviness.

General Services Administration (GSA) Region 9, Federal Building and U.S. Courthouse, Phoenix, AZ. Responsible for conducting a prerenovation survey to verify and identify asbestos-containing materials (ACM) and lead-based paint (LBP).

Southern Division, Naval Facilities Engineering Command, Corpus Christi Army Depot, Corpus Christi, TX. Responsible for conducting an ACM survey of 63 selected buildings at the Army Depot.

AFCEE, Kelly AFB, San Antonio, TX. Responsible for conducting an ACM and LBP survey of 135 selected buildings on the former Kelly AFB.

Metropolitan Atlanta Rapid Transit Authority (MARTA), Railroad Service Facility, Atlanta, GA. Responsible for conducting a hazardous materials survey of approximately 40 buildings.

Naval Air Station (NAS) Jacksonville, FL. Responsible for performing a survey inventory and assessing ACM at Building 11 of NAS Jacksonville.

FEB 00–JUL 00 ***Smith Kline and Beecham Columbia, Bogotá, Colombia***

General Contractor

Started up the in-house plastic bottle manufacturing plant for the Colombian Operation. This involved setting up the processes, starting up the manufacturing plant, quality control (QC), process documentation, and planning and cost control.

OCT 98–FEB 00 ***Simany LTDA, Bogotá, Colombia***

General Manager

Oversaw the total operation of a uniform and industrial supply company.

SEP 95–SEP 98 ***Soplex S.A., Bogotá Colombia***

General Manager

Oversaw the total operation of a plastic bottle and mold company.

FEB 92–SEP 95 ***Placa S.A., Bogotá, Colombia***

Plant Manager

Responsible for the Manufacturing Division. Oversaw design, maintenance, manufacturing, and quality assurance of a plastic bottle and mold company.

FEB 88–OCT 91 ***Famoplast LTDA, Bogotá, Colombia***

Plant Manager

Responsible for the Manufacturing Division. Oversaw design, maintenance, manufacturing, and QA of a plastic bottle and mold company.

JAN 86–FEB 88 ***McKesson Columbia, S.A. Bogotá, Colombia***

Engineering Manager

Responsible for the maintenance of the two manufacturing plants for pharmaceutical and personal care products. Also responsible for their laboratory facilities.

SEP 81–JAN 86 ***Cofre S.A., Bogotá, Colombia***

Quality Control Manager

Performed as Quality Control Manager for an automotive parts plant.

Regulatory Experience

Henry has 9 years of experience working with RCRA, CERCLA, SARA, LUST, TSCA, CWA/OPA, CAA, OSHA, and other federal, state, and local regulations on federal government, state government, and commercial projects throughout the country. He has experience in EPA Regions 2, 3, 4, 5, 6, 7, 8, and 9, and 36 U.S. states and Puerto Rico.

Publications

- Vaca, Henry, *Evaluation and Optimization of a Solar-Powered Water Heating System*. National University of Colombia, Bogotá, Colombia, 1981.

Professional Affiliations

- Member, American Society for Quality

References

To be provided upon request

Henry A. Vaca, CQM, CQC System Manager — CAPE

Duties and Responsibilities

As the CQC System Manager, Henry is responsible for preparing CQC Plans, and ensuring compliance with the QC requirements identified in the SOW, Work Plan, and CQC Plan. He will conduct inspections and document that the site work is in compliance with CQC Plan, and supervise QC testing as required by contract documents. He will also review and approve of all submittals.

Chronology of Experience

8/2000 – Present	CAPE
2/2000 – 7/2000	Smith Kline and Beecham
10/1998 – 2/2000	Simany LTDA
9/1995 – 9/1998	Soplex S.A.
2/1992 – 9/1995	Placa S.A.
11/1991 – 1/1992	Technical Consultant
2/1988 – 10/1991	Famoplast LTDA
1/1986 – 2/1988	McKesson Colombia, S.A.
9/1981 – 1/1986	Cofre S.A.

Education

- BS, Mechanical Engineering, National University of Columbia, Bogotá, Columbia, 1981
- MS, Quality Assurance, Southern Polytechnic State University, Marietta, GA, 2006

Registrations/Certifications

- Mechanical Engineer; The Professional Council Division of Engineering and Architecture of Colombia, 01/12/1981, #25230-05981
- Certified Quality Manager (CQM), American Society for Quality, 10/22/2005, # 9657

Specialized Training

- Certified Quality Manager Refresher Class, American Society for Quality, August 2005
- USACE Construction Quality Management for Contractors Training, May 2003
- 40 Hr HazWOPER, 8/16/2001 and 8 Hr annually refreshers since then
- Safety and Environmental Management Surveys for GSA, September 2003

Project Experience

CQC System Manager, Maintain/Repair Jet Fuel Storage Tanks at Stewart ANG, Newburgh, NY, $250,000, 1/06 – present. Responsible for implementation of CQC Plan, project quality oversight, and CQC activities. This project is relevant because it was completed at a DOD fuel facility and included storage tank rehabilitation.

Primary POC for customer – Kevin Fenner, Ordering Officer, Stewart ANG, NY, (845) 563-2832

CQC System Manager, AFCESA, Repairs to POL Hydrant System and Repairs to POL Area at Pittsburgh ANG, Corapolis, PA, $2,918,460, 9/05 – present. Responsible for implementation of CQC Plan, quality oversight, and CQC activities for proper project execution. This project is relevant because it was completed at a DOD fuel facility and included tank and piping system repairs and upgrades.

Primary POC for customer – Kevin Grievson, S/R&M PM, POL, AFCESA, (850) 283-6293

CQC System Manager, AFCEE, API 653 Integrity Inspection for Five ASTs, Tinker AFB, OK, $173,990, 1/05 – 7/05. Responsible for implementation of CQC Plan, quality oversight, and CQC activities for proper project execution. This project is relevant because it was completed at a DOD facility and included an API 653 integrity inspection on fuels storage tanks.

Primary POC for customer – Lonnie Wolfe, COR, AFCEE, Brooks City-Base, TX, (210) 536-5269

CQC System Manager, AFCEE, Repair Underground Bulk Storage Tank, DFSP San Pedro, CA, $961,726, 3/05 – 4/06. Responsible for implementation of CQC Plan, quality oversight, and CQC activities for proper project execution. This project is relevant because it was completed at a DOD fuel facility and included storage tank rehabilitation.

Primary POC for customer – Joseph Trani, Facility Engineer, DESC, San Pedro, CA, (310) 241-2809

CQC System Manager, AFCEE, Fuel Facility Repair and Upgrades, DFSP San Pedro, CA, $1,013,242, 12/04 – 7/05. Responsible for implementation of CQC Plan, quality oversight, and CQC activities for proper project

execution. This project is relevant because it was completed at a DOD fuel facility and included maintenance and repairs of the electrical fuels distribution system and other facility repairs and upgrades.

Primary POC for customer – Joseph Trani, Facility Engineer, DESC, San Pedro, CA, (310) 241-2809

CQC System Manager, AFCEE, Repair Tank #3 Facility 141 and Tank #2 Facility 145, Columbus AFB, MS, $1,059,301, 1/05. Responsible for implementation of CQC Plan, quality oversight, and CQC activities for proper project execution. This project is relevant because it was completed at a DOD fuel facility and included storage tank rehabilitation work and storage tank foundation repair.

Primary POC for customer – Teri DuPriest, Restoration Team Chief, AFCEE. Brooks City-Base, TX, (210) 536 9026.

CQC System Manager, AFCEE, Repair AST 49, DFSP San Pedro, CA, $589,691, 1/05 – 9/05. Responsible for implementation of CQC Plan, quality oversight, and CQC activities for proper project execution. This project is relevant because it was completed at a DOD fuel facility and included storage tank rehabilitation.

Primary POC for customer – Joseph Trani, Facility Engineer, DESC, San Pedro, CA, (310) 241-2809

CQC System Manager, AFCEE, Rehabilitate Truck Loading Racks, DFSP Charleston, SC, $368,752, 4/04 – 5/05. Responsible for implementation of CQC Plan, quality oversight, and CQC activities for proper project execution. This project is relevant because it was completed at a DOD facility and included fuel truck loading system repairs and upgrades.

Primary POC for customer – Joseph Trani, Facility Engineer, DESC, San Pedro, CA, (310) 241-2809

CQC System Manager, AFCEE, Repair 10-inch Pipeline, DFSP San Pedro, CA, $76,751, 8/04 – 11/04. Responsible for implementation of CQC Plan, quality oversight, and CQC activities for proper project execution. This project is relevant because it was completed at a DOD fuel facility and included piping revisions and repairs.

Primary POC for customer – Joseph Trani, Facility Engineer, DESC, San Pedro, CA, (310) 241-2809

January 13, 2011

(Via E-Mail)

Mr. Humberto Altamirano
Cape Environmental Management Inc
100 Corporate Pointe
Warner Robins, Georgia 31088

Re: Contractor Quality Control Systems Manager Delegation of Authority
Rockaway Borough Well Field Superfund Site, East Main / Wall Street Plume
Rockaway Borough, Morris County, New Jersey
Contract No. W912DQ-05-D-0001, Task Order 005

Mr. Altamirano,

Effective 17JAN11, this letter is to authorize you as Contractor Quality Control Systems Manager (CQCSM), replacing Robert Landle. This delegation of authority is consistent with the responsibilities and authority described in the above referenced contract. You will have no other duties than those specified for the CQCSM and are authorized to act on CAPE Environmental Management Inc's (CAPE) behalf in the following manner:

- Perform all CQCSM duties for the project.
- Direct work to ensure compliance with approved statement of work, work plans, drawings, specifications, and applicable regulations.
- Stop work which is not in compliance with the contract
- Designate and supervise QC Task managers, as necessary.
- Review and submit project submittals.
- Coordinates and supervises QC tests.
- Prepares daily activity reports.

Michael Lamon has been retained and is authorized to act as Alternative CQCSM. If you have any questions, please feel free to give me a call at (610) 594-8606.

Sincerely,
CAPE Environmental Management, Inc.

Christopher Karg
Vice President

Copy to: M. Johnson - USACE
D. Bettendorf – CAPE

Humberto Altamirano
Contractor Quality Control Systems Manager

Quality Control/SSHO Professional with more than 8 years of experience in safety supervision of construction and environmental remediation projects.

Education

- High School Diploma, Wenatchee High School, Wenatchee, WA, 1993.
- Industrial Maintenance, Middle Georgia Technical College, Warner Robins, GA, 2004

Certifications/Specialized Training

- USACE Construction Quality Management for Contractors training, 2008
- 40-Hour Occupational Safety and Health Administration (OSHA) Hazardous Waste Operations and Emergency Response (HazWOPER) Training, 2002
- 8-Hour OSHA HazWOPER Supervisor Training, 2007
- 8-Hour OSHA HazWOPER Refresher Training, 2010
- 30-Hour OSHA 510 OSHA Standards for the Construction Industry (2007)
- 30-Hour OSHA Construction S&H training, 2010
- 40-Hour Military EM 385-1-1 Safety training, 2010
- 8-Hour CAPE Site Safety and Health Officer (SSHO) training, 2008
- Confined Space training, 2003
- DOT Hazardous Materials Training, 2007
- Lead Competent Person training, 2007
- RCRA Hazardous Waste Regulations, 2009
- First Aid/CPR, 2009

Experience

2002–present ***CAPE, Costa Mesa, CA***

O&M Supervisor/Site Safety and Health Officer/QC Officer

Summary of Experience

- Acted as QC Officer/SSHO providing S&H support for construction/hazardous waste projects
- **Warner Robins AFB, Georgia.** Installation of Vapor Extraction and AirSparging Wells, Soil Vapor Extraction, AirSparging and Activated Carbon System Installations. Ground Water and Soil Sampling. Hazardous Waste handling and disposal. Air Sampling for Hydrocarbon Vapor destruction to meet Compliance with EPA Standards. Construction QC inspections and Verifications for Defense logistics Agency
- **Anniston Army Depot, Alabama**
- Demolition of above ground storage tank and associated appurtenances. Demo of 500,000 gallons fuel tank. Removal of Asbestos and lead based paint on tank. Disposal of waste per Alabama Department of Environmental Management Standards. QC for USACE Mobile District.
- **Barksdale AFB, Louisiana**
  Landfill 3 Erosion Control repairs. Repair Landfill Chutes, install Geotextile Fabric, erosion controls and rip rap.
- **Lackland AFB, San Antonio TX**

- Replace and Repair of Water Mains. Installed new 6” and 8” C-900 PVC water main pipe. Installed New Fire Hydrants, Cathodic protection, Hydrostatic Testing, Water Sampling, Compaction Testing and Concrete Strength Testing. Responsible for QC and Health and Safety.

- Implemented Site Safety and Health Plans (SSHPs) for hazardous waste site operations
- Supervised confined space entry and remediation systems O&M operations
- Conducted daily safety meetings and monthly supervisor safety meetings
- Performed safety inspections/audits and conducted incident investigations
- Established required levels of protection for site personnel for site activities
- Performed air monitoring and calibration and maintenance of air monitoring instruments
- Conducted air monitoring for combustible gas, oxygen, H_2S, CO, VOCs, asbestos and lead
- SSHO/QC for tank demolition project awarded a USACE-Mobile District safety award (2010).

2001–2002 ***Clifford Manufacturing, Mesa, AZ***

Technician

Manufacturing of Highway Safety and Traffic Control Products.

2000-1998

Team Leader/Technician ***Special Devices, Inc., Mesa AZ***

Manufacturing of energetic devices for the Automotive, Defense and Aerospace and Mining and Blasting industries

Regulatory Experience

8 Years Remediation work pertaining to RCRA Sites at Warner Robins AFB Georgia. Responsible for Soil and Ground Water Remediation, Maintaining Regulatory Compliance during installation, operation and maintenance of Remediation Systems. Activated Carbon Systems, Soil Vapor Extraction, AirSparging, Bio Venting and BioSparging

U.S. ARMY CORPS OF ENGINEERS

PROFESSIONAL DEVELOPMENT SUPPORT CENTER
HUNTSVILLE, ALABAMA

CERTIFICATE

HUMBERTO ALTAMIRANO

has completed the Corps of Engineers Training Course

CONSTRUCTION QUALITY MANAGEMENT FOR CONTRACTORS

(STATE OF FLORIDA, Construction Industry Licensing Board COURSE # 0001674, Provider # 0001330)
(12 CEHs of 16 CEH requirement, 1 CEH for Business Practices (site safety, workman's comp., financing CEHs not included)
(STATE OF FLORIDA, Board of Architecture and Interior Design COURSE # AR.04.579 - 17 Hours - Level of Instruction - Advanced)

is awarded continuing education credits as
*indicated for **16** hours of organized instruction*

CERTIFIED INTERNATIONAL ASSOCIATION FOR CONTINUING EDUCATION AND TRAINING IACET PROVIDER
Certified Provider #199309
1.3 CEUs

CONTINUING EDUCATION AIA
Registered Provider #I009
39 LUs

PE
Registered Provider
13 PDHs

Given at West Palm Beach, FL By Jacksonville District 21 May 2008
Location Instructional District Date

Joseph Tavares
CESAJ-CO-CQ Facilitator (904) 232-3446

THIS CERTIFICATE EXPIRES FIVE YEARS FROM DATE OF ISSUE

Chief, USACE Professional Development Support Center

United States Department of Labor

Occupational Safety and Health Administration
OSHA Training Institute Education Center
Georgia Tech Research Institute

This is to certify that on

OCTOBER 5, 2007

Humberto Altamirano

has diligently and with merit completed training in

OSHA Course # 510

Occupational Safety and Health Standards for the Construction Industry

CEUS earned: 2.6

Henry E. Payne
Director, OSHA Training Institute

Myrtle J. Turner
Director, Education Center

OSHA Occupational Safety and Health Administration

34-600694991

This card acknowledges that the recipient has successfully completed a 30-hour Occupational Safety and Health Training Course in

Construction Safety and Health

HUMBERTO ALTAMIRANO U05865020

VALERIE STAKES

(Trainer name – print or type)

11/19/2010

(Course end date)

HAZWOPER Supervisor

29 CFR 1910.120(e)(4)

has been successfully completed by

Humberto Altamirano

DATE: 02/08/07

Authorized Instructor

T.R.Consulting, Inc.
5351 Setters Way
CO Sprgs CO 80919
(719) 359-8467
#GA07020801

American Heart Association

Learn and Live

Heartsaver® First Aid

Humberto Altamirano

This card certifies that the above individual has successfully completed the objectives and skills evaluations in accordance with the curriculum of the AHA for Heartsaver First Aid Program.

Modules Completed: A C D

11/20/2009
Issue Date

11/30/2011
Recommended Renewal Date

UNIVERSITY OF CALIFORNIA, SAN DIEGO

UCSD EXTENSION

OSHA TRAINING CENTER, REGION IX EDUCATION CENTER

A Division of UCSD Extended Studies and Public Programming

HUMBERTO ALTAMIRANO

HAS DILIGENTLY AND WITH MERIT COMPLETED TRAINING IN

MILITARY EM385-1-1 40 HOUR SAFETY (UCSD 9300)

NOVEMBER 15-19, 2010

DATE

DIRECTOR,
OSHA TRAINING INSTITUTE
UNIVERSITY OF CALIFORNIA, SAN DIEGO EDUCATION CENTER
DIVISION OF EXTENDED STUDIES AND PUBLIC PROGRAMS

APPENDIX B

CONSTRUCTION DAILY QUALITY CONTROL REPORT

CONTRACTORS QUALITY CONTROL REPORT (QCR) DAILY LOG OF CONSTRUCTION	REPORT NUMBER 1,624 Page 1 of 2 DATE 15 Nov 2010 - Monday
PROJECT Rockaway Wellfield Superfund Site, EM/WS	CONTRACT NUMBER W912DQ-05-D-0001 0005
CONTRACTOR CAPE Environmental Management Inc.	WEATHER Weather Caused No Delay Temperature Min 41 °F, Max 54 °F; 0.07 IN Precipitation; No Wind

QC NARRATIVES

List Contractors and Subs Working This Day & Area of Responsiblity

CAPE - Pre-mobilization activities. No physical work performed

Description & Location of Work (Also Indicate days of no work and reasons)

Work Location:
-N/A: No contractors onsite.
-Last day onsite was 11/01/10.

Pre-work Items:
-None to report.

Work Performed:

FIELD WORK:
-No onsite work performed.

GWTS / PUMPHOUSE DESIGN:
-CDM advanced 90% design to 100% design. The design is in peer review.

TRENCH DESIGN:
-Continue working on Trench Design revision.

PERMITS:
-TWA and FHA permits delivered to the Borough of Rockaway for signature.

OTHER:
-Held a By pass meeting with the Borough of Rockaway, USACE, and Ground Water Treatment and Technologies.
-Held progress meeting #041 at the USACE/EPA office.
-Performed a site inspection of 122 Jackson Aveune with the EPA and USACE.

All work was performed safely and in accordance with EM385-1-1.

Work Scheduled for Tomorrow (16NOV10):
-None

Follow-Up Phase Inspection Performed, Results & Corrective Action Taken

Follow-Up Phase Inspections were performed for the following DFWs:
-None

Work is being performed in accordance with the contract requirements.

Job Safety, Indicate What Was Checked, Results, Corrective Action Taken

Daily Tailgate Safety Meeting - N/A

Did Anything Develop that May Lead to a Change Order/Claim?

-JCP&L requires clearance for accessing the new electrical distribution system. The shrub line at 122 Jackson Avenue may need to be trimed. In addition one tree bordering the property may need to be removed in addition to another tree in the rear of the property at the toe of the M&E embankment.

Verbal Instructions Given by Gov't

-During the site inspection at 122 Jackson Avenue, Mr. Brian Quinn of the USEPA suggested having a landscaper evaluate the survival rate of the tree boarding 122 Jackson Avenue after removal of all large branches impeding 122 Jackson Avenue. Mr. Quinn suggested removal only if the tree can not survive trimming.

CONTRACTORS QUALITY CONTROL REPORT (QCR) DAILY LOG OF CONSTRUCTION	REPORT NUMBER 1,624 Page 2 of 2 DATE 15 Nov 2010 - Monday
PROJECT Rockaway Wellfield Superfund Site, EM/WS	CONTRACT NUMBER W912DQ-05-D-0001 0005

Delivery of Equipment and Materials
None.

Addtional Activities and Remarks (i.e., Submittal Actions, Misc Remarks)
Attachments:
None.

PREP/INITIAL DATES (Preparatory and initial dates held and advance notice)

No preparatory or initial inspections were held today

ACTIVITY START/FINISH

No activities were started or finished today

QC REQUIREMENTS

No QC requirements were completed today

QA/QC DEFICIENCY (Describe QC Deficiency items issued, Report QC and QA Deficiency items corrected)

No QC Deficiency items were issued today

No Deficiency items were corrected today

CONTRACTORS ON SITE (Report first and/or last day contractors were on site)

No contractors had their first or last day on site today

LABOR HOURS

No labor hours were Reported today

Total hours worked to date: 5,158.0

EQUIPMENT HOURS

No equipment hours were Reported today

Total operating hours to date: 1,003.00

ACCIDENT REPORTING (Describe accidents)

No accidents reported today

CONTRACTOR CERTIFICATION **On behalf of the contractor, I certify that this Report is complete and correct and all equipment and material used and work performed during this Reporting period are in compliance with the contract plans and specifications, to the best of my knowledge, except as noted above.**

QC REPRESENTATIVE'S SIGNATURE	DATE	SUPERINTENDENT'S INITIALS	DATE

APPENDIX C

ENG FORM 4288

SUBMITTAL REGISTER (ER 415-1-10)

TITLE AND LOCATION: Rockaway Wellfield Superfund Site, EM/WS,Rockaway Borough, East Main/Wall Street, Morris County, NJ

DATE: 05 May 2011

CONTRACTOR: CAPE Environmental Management Inc.

CONTRACT NUMBER: W912DQ-05-D-0001 0005

ACTIVITY No.	TRANS-MITTAL No.	ITEM No.	SPEC PARAGRAPH No.	DESCRIPTION OF SUBMITTAL	TYPE OF SUBMITTAL	CLASSI-FICATION FIO GA, DA or CR	CONTRACTOR REVIEWER	CONTRACTOR SCHEDULE DATES: SUBMIT NEEDED BY	APPROVAL NEEDED BY	MATERIAL NEEDED BY	CONTRACTOR ACTION: CODE	CORPS RECEIVED DATE	GOVERNMENT ACTION: CODE	CORPS RETURNED DATE
SECTION - 01 32 01.00 10			**PROJECT SCHEDULE**											
	4	2	01 32 01.00 10	Schedule Update 004		DA/CR					A	13 Apr 10	B	29 Apr 10
SECTION - 01060			**Regulatory Requirements**											
	1.1	1	01060	Well Head Protection Waiver Letter	RECORDS	FIO		25 May 06	25 May 06	25 May 06	A	02 Aug 10	F	12 Aug 10
SECTION - 01170			**Special Project Provisions**											
A3340		1	01170 1.07.A	Valve Schedule	PRECON SUBMTL	FIO	mdl	29 Jun 11	29 Jun 11	09 Jul 11				
A3340		2	01170 1.07.B	Valve Tag Samples	SAMPLES	DA		29 Jun 11	29 Jun 11	09 Jul 11				
A2290		3	01170 1.08	Noise Level Data	DESIGN DATA	FIO		08 Aug 11	08 Aug 11	08 Aug 11				
		4	01170 1.11.A.2	Seismic Calculations	DESIGN DATA	DA								
A2280		5	01170 1.12	Material Safety Data Sheets	PRODUCT DATA	FIO		25 Jul 11	25 Jul 11	25 Jul 11				
SECTION - 01171			**Electric Motors to 250 HP**											
A2280		1	01171 1.03.A	Electric Motor Report	PRODUCT DATA	DA		25 Jul 11	25 Jul 11	25 Jul 11				
SECTION - 01172			**Pipe Penetrations**											
A2620	1	1	01172 1.02	Link Seal Information	PRODUCT DATA	FIO	mdl	22 Feb 11	22 Feb 11	22 Feb 11	A	14 Feb 11	F	14 Feb 11
SECTION - 01201			**Pre-Construction & Pre-Work Conferences**											
A0120		1	01201 1.5 E	Pre-Construction Mtg Minutes	PRODUCT DATA	GA	mdl							
		2	01201 1.20	Pre-Work Mtg Minutes		GA								
		3	01201 1.30	Pre-Construction QC Mtg Minutes		GA								
		4	01201 1.30	Pre-Construction Safety Mtg Minutes		GA								
		5	01201 1.5.1	Conference Meeting Minutes	PRODUCT DATA	GA								
SECTION - 01202			**Progress Meetings**											
0001	1	1	01202 1.3.1	Progress Meeting Minutes 001	PRODUCT DATA	GA	mdl	22 Nov 10	22 Nov 10	22 Nov 10	A	20 Aug 07	A	29 May 07
	2	2	01202 1.3.1	Progress Meeting Minutes 002	PRODUCT DATA	GA	mdl				A	20 Aug 07	B	05 Jun 07
	3	3	01202 1.3.1	Progress Meeting Minutes 003	PRODUCT DATA	GA	mdl				A	20 Aug 07	B	05 Jun 07
	4	4	01202 1.3.1	Progress Meeting Minutes 004	PRODUCT DATA	GA					A	20 Aug 07	A	12 Jun 07
	5	5	01202 1.3.1	Progress Meeting Minutes 005	PRODUCT DATA	GA	mdl				A	20 Aug 07	A	20 Jun 07
	6	6	01202 1.3.1	Progress Meeting Minutes 006	PRODUCT DATA	GA					A	20 Aug 07	A	09 Jul 07
	7	7	01202 1.3.1	Progress Meeting Minutes 007	PRODUCT DATA	GA	mdl				A	20 Aug 07	A	09 Jul 07
	8	8	01202 1.3.1	Progress Meeting Minutes 008	PRODUCT DATA	GA	mdl				A	20 Aug 07	A	09 Jul 07
	9	9	01202 1.3.1	Progress Meeting Minutes 009	PRODUCT DATA	GA	mdl				A	20 Aug 07	A	02 Aug 07
	10	10	01202 1.3.1	Progress Meeting Minutes 010	PRODUCT DATA	GA	mdl				A	20 Aug 07	G	02 Feb 11
	11	11	01202 1.3.1	Progress Meeting Minutes 011	PRODUCT DATA	GA	mdl				A	20 Aug 07	A	13 Aug 07
	12	12	01202	Progress Meeting Minutes 012	PRODUCT DATA	GA	mdl				A	23 Aug 07	A	14 Aug 07
	13	13	01202 1.3.1	Progress Meeting Minutes 013	PRODUCT DATA	GA	mdl				A	23 Aug 07	A	21 Aug 07
	14	14	01202 1.3.1	Progress Meeting Minutes 014	PRODUCT DATA	GA	mdl				A	29 Aug 07	A	28 Aug 07

RANGE : ALL

SORT : SECTION & ITEM

SUBMITTAL REGISTER (ER 415-1-10)

TITLE AND LOCATION: Rockaway Wellfield Superfund Site, EM/WS,Rockaway Borough, East Main/Wall Street, Morris County, NJ

DATE: 05 May 2011

CONTRACTOR: CAPE Environmental Management Inc.

CONTRACT NUMBER: W912DQ-05-D-0001 0005

ACTIVITY No.	TRANS-MITTAL No.	ITEM No.	SPEC PARAGRAPH No.	DESCRIPTION OF SUBMITTAL	TYPE OF SUBMITTAL	CLASSI-FICATION FIO GA, DA or CR	CONTRACTOR REVIEWER	CONTRACTOR SCHEDULE DATES SUBMIT NEEDED BY	APPROVAL NEEDED BY	MATERIAL NEEDED BY	CONTRACTOR ACTION CODE	CORPS RECEIVED DATE	GOVERNMENT ACTION CODE	CORPS RETURNED DATE
	15	15	01202 1.3.1	Progress Meeting Minutes 015	PRODUCT DATA	GA	mdl				A	05 Sep 07	A	05 Sep 07
	20	16	01202 1.3.1	Progress Meeting Minutes 016	PRODUCT DATA	GA	mdl				A	12 Oct 07	G	02 Feb 11
	20	17	01202 1.3.1	Progress Meeting Minutes 017	PRODUCT DATA	GA	mdl				A	12 Oct 07	G	02 Feb 11
	18	18	01202	Progress Meeting Minutes 018	PRODUCT DATA	GA	mdl				A	21 Sep 07	A	27 Sep 07
	19	19	01202 1.3.1	Progress Meeting Minutes 019	PRODUCT DATA	GA	mdl				A	03 Oct 10	A	03 Oct 07
	21	20	01202 1.3.1	Progress Meeting Minutes 020	PRODUCT DATA	GA	mdl				A	10 Oct 07	A	23 Oct 07
	22	21	01202 1.3.1	Progress Meeting Minutes 021	PRODUCT DATA	GA	mdl				A	16 Oct 07	A	23 Oct 07
	23	22	01202 1.3.1	Progress Meeting Minutes 022	PRODUCT DATA	GA	mdl				A	28 Oct 07	A	31 Oct 07
	24	23	01202 1.3.1	Progress Meeting Minutes 023	PRODUCT DATA	GA	mdl				A	15 Nov 07	A	31 Oct 07
	25	24	01202 1.3.1	Progress Meeting Minutes 024	PRODUCT DATA	GA	mdl				A	15 Nov 07	G	02 Feb 11
	26	25.1	01202 1.3.1	Progress Meeting Minutes 024R1	PRODUCT DATA	GA	mdl				A	29 Nov 07	A	29 Nov 07
	27	26	01202	Progress Meeting Minutes 025	PROGRESS RPTS	GA	mdl				A	29 Nov 07	A	29 Nov 07
	28	27	01202	Progress Meeting Minutes 026	PRODUCT DATA	GA	mdl				A	12 Dec 07	A	19 Dec 07
	29	28	01202	Minutes fr/ Mod 5 Proposal Conference		GA	mdl				A	18 Jan 08	F	04 Feb 08
	30	29	01202	Minutes for NJDEP mtg re: SDWS		GA	mdl				A	27 Feb 08	F	29 Feb 08
	31	30	01202	Progress Meeting Minutes 027	PRODUCT DATA	GA	mdl				A	18 Jan 08	A	04 Feb 08
A0110	32	31	01202	Progress Meeting Minutes #28	PROGRESS RPTS	GA	mdl				A	04 Feb 08	A	04 Feb 08
A0110	33	32	01202	Progress Meeting Minutes #29	PROGRESS RPTS	GA	mdl				A	21 Feb 08	A	21 Feb 08
	34	33	01202	Progress Meeting Minutes 030	PRODUCT DATA	GA	mdl				A	19 Mar 08	A	29 Apr 08
	35	34	01202	Progress Meeting Minutes 031	PRODUCT DATA	GA	mdl				A	29 Apr 08	A	29 Apr 08
	36	35	01202	Progress Meeting Minutes 032	PRODUCT DATA	GA	mdl				A	29 Apr 08	A	29 Apr 08
	37	36	01202	Progress Meeting Minutes 033	PRODUCT DATA	GA	mdl				A	16 May 08	A	16 May 08
	38	37	01202	Piezometer Site Walk Minutes	PRODUCT DATA	GA	mdl				A	13 Jun 08	G	02 Feb 11
	39	38	01202	Piezometer Scoping Discussion Minutes	PRODUCT DATA	GA	mdl				A	17 Jun 08	G	02 Feb 11
	40	39	01202	Progress Meeting Minutes 034	PRODUCT DATA	GA					A	25 Jun 10	A	25 Jun 10
	41	40	01202 1.3.1	Re-start Kickoff Meeting, Revised	PRODUCT DATA	GA	mdl				A	12 Aug 10	B	12 Aug 10
	42	41	01202 1.3.1	Zero Net Fill Meeting Minutes	PRODUCT DATA	GA	mdl				A	12 Aug 10	A	16 Aug 10
	43	42	01202 1.3.1	Borough Meeting Pre Design Minutes	PRODUCT DATA	GA	mdl				A	12 Aug 10	A	16 Aug 10
	44	43	01202 1.3.1	CDM / HDR Conference Call Minutes	PRODUCT DATA	GA	mdl				A	12 Aug 10	B	27 Sep 10
	45	44	01202 1.3.1	Extraction Well Design Meeting Minutes	PRODUCT DATA	GA	mdl				A	23 Sep 10	F	27 Sep 10
	46	45	01202 1.3.1	Boro of Rockaway Mtg Minutes 26AUG10	PROGRESS RPTS	DA/CR	mdl				A	16 Sep 10	A	27 Sep 10
	47	46	01202 1.6	Progress Meeting Minutes 036	PROGRESS RPTS	DA/CR					A	08 Sep 10	A	10 Sep 10
	48	47	01202 1.6	Progress Meeting Minutes 037	PROGRESS RPTS	DA/CR					A	27 Sep 10	A	27 Sep 10
	49	48	01202 1.6	Progress Meeting Minutes 038	PROGRESS RPTS	DA/CR					A	28 Sep 10	A	28 Sep 10
	50	49	01202 1.6	Progress Meeting Minutes 035	PROGRESS RPTS	FIO					A	28 Sep 10	F	05 Oct 10

RANGE : ALL

SORT : SECTION & ITEM

SUBMITTAL REGISTER (ER 415-1-10)

TITLE AND LOCATION: Rockaway Wellfield Superfund Site, EM/WS,Rockaway Borough, East Main/Wall Street, Morris County, NJ

DATE: 05 May 2011

CONTRACTOR: CAPE Environmental Management Inc.

CONTRACT NUMBER: W912DQ-05-D-0001 0005

ACTIVITY No.	TRANS-MITTAL No.	ITEM No.	SPEC PARAGRAPH No.	DESCRIPTION OF SUBMITTAL	TYPE OF SUBMITTAL	CLASSI-FICATION FIO GA, DA or CR	CONTRACTOR REVIEWER	CONTRACTOR SCHEDULE DATES SUBMIT NEEDED BY	APPROVAL NEEDED BY	MATERIAL NEEDED BY	CONTRACTOR ACTION CODE	CORPS RECEIVED DATE	GOVERNMENT ACTION CODE	CORPS RETURNED DATE
	51	50	01202 1.6	Progress Meeting 039	PROGRESS RPTS	DA/CR					A	21 Oct 10	A	26 Oct 10
	52	51	01202 1.6	I&C Presentation Meeting Minutes	PROGRESS RPTS	GA					A	10 Oct 10	A	15 Nov 10
	53	52	01202 1.6	Progress Meeting Minutes 040	PROGRESS RPTS	GA					A	15 Nov 10	A	15 Nov 10
	54	53	01202 1.3.1	Progress Meeting Minutes 041	PROGRESS RPTS	GA	mdl				A	19 Nov 10	B	22 Nov 10
	55	54	01202 1.3.1	Progress Meeting Minutes 042	PRODUCT DATA	GA	mdl				A	24 Nov 10	A	24 Nov 10
	56	55	01202 1.3.1	Progress Meeting Minutes 043	PRODUCT DATA	GA	mdl				A	30 Nov 10	A	30 Nov 10
	57	56	01202 1.3.1	Progress Meeting Minutes 044	PRODUCT DATA	GA	mdl				A	07 Dec 10	A	09 Dec 10
	58	57	01202 1.3.1	Progress Meeting Minutes 045	PRODUCT DATA	GA	mdl				A	17 Dec 10	A	17 Dec 10
	59	58	01202 1.3.1	Progress Meeting Minutes 046	PRODUCT DATA	GA	mdl				A	24 Dec 10	A	29 Dec 10
	60	59	01202 1.3.1	Progress Meeting Minutes 047	PRODUCT DATA	GA	mdl				A	07 Jan 11	A	07 Jan 11
	61	60	01202 1.3.1	Bypass Flowrate Mtg w/ J. Rossi	PRODUCT DATA	GA	mdl				A	07 Jan 11	F	10 Jan 11
	62	61	01202 1.3.1	Progress Meeting Minutes 048	PRODUCT DATA	GA	mdl				A	18 Jan 11	A	14 Jan 11
	63	62	01202 1.3.1	Progress Meeting Minutes 049	PRODUCT DATA	GA	mdl				A	18 Jan 11	A	19 Jan 11
	64	63	01202 1.3.1	Progress Meeting Minutes 050	PRODUCT DATA	GA	mdl				A	26 Jan 11	A	26 Jan 11
	65	64	01202 1.3.1	Progress Meeting Minutes 051	PRODUCT DATA	GA	mdl				A	03 Feb 11	A	04 Feb 11
	66	65	01202 1.3.1	Progress Meeting Minutes 052	PRODUCT DATA	GA	mdl				A	14 Feb 11	A	14 Feb 11
	67	66	01202 1.2.3	Progress Meeting Minutes 053	PRODUCT DATA	GA	mdl				A	16 Feb 11	A	22 Feb 11
	68	67	01202 1.2.3	Progress Meeting Minutes 054	PRODUCT DATA	GA	mdl				A	03 Mar 11	A	08 Mar 11
	69	68	01202 1.2.3	Progress Meeting Minutes 055	PRODUCT DATA	GA	mdl				A	11 Mar 11	A	18 Mar 11
	70	69	01202 1.2.3	Progress Meeting Minutes 056	PRODUCT DATA	GA	mdl				A	16 Mar 11	A	17 Mar 11
	71	70	01202 1.2.3	Progress Meeting Minutes 057	PRODUCT DATA	GA	mdl				A	26 Mar 11	A	28 Mar 11
	72	71	01202 1.2.3	Progress Meeting Minutes 058	PRODUCT DATA	GA	mdl				A	31 Mar 11	A	01 Apr 11
	73	72	01202 1.2.3	Progress Meeting Minutes 059	PRODUCT DATA	GA	mdl				A	08 Apr 11	A	11 Apr 11
	74	73	01202 1.2.3	Progress Meeting Minutes 060	PRODUCT DATA	GA	mdl				A	18 Apr 11	A	18 Apr 11
	75	74	01202 1.2.3	Progress Meeting Minutes 061	PRODUCT DATA	GA	mdl				A	25 Apr 11	A	25 Apr 11
	76	75	01202 1.2.3	Progress Meeting Minutes 062	PRODUCT DATA	GA	mdl				A	28 Apr 11	A	29 Apr 11
SECTION - 01203			**Job Site Administration**											
0001	1	1	01203	B&B Drilling SF-1413	PRECON SUBMTL	GA		22 Nov 10	22 Nov 10	22 Nov 10	A	20 Aug 07	F	02 May 07
0001	1	2	01203	B&B Drilling - Certificate of Insurance	PRECON SUBMTL	FIO	mdl	22 Nov 10	22 Nov 10	22 Nov 10	A	20 Aug 07	FX	02 May 07
0001	4	2.1	01203	B&B Drilling COI - Expires 050808	PRECON SUBMTL	FIO	mdl	22 Nov 10	22 Nov 10	22 Nov 10	A	15 May 07	C	15 May 07
0001	2	3	01203	Delegation of Authority - Superintendent	QUALIFICATIONS	GA	mdl	22 Nov 10	22 Nov 10	22 Nov 10	A	20 Aug 07	G	02 Feb 11
0001	2	4	01203	Delegation of Authority - PJM	QUALIFICATIONS	GA	mdl	22 Nov 10	22 Nov 10	22 Nov 10	A	20 Aug 07	G	02 Feb 11
0001	3	5	01203 n/a	CAPE, COI -Expires 080501	CERTIFICATES	FIO	mdl	22 Nov 10	22 Nov 10	22 Nov 10	A	20 Aug 07	FX	07 May 07
0001	5	6	01203 n/a	CAPE COI, Revision 1	PRECON SUBMTL	FIO	mdl	22 Nov 10	22 Nov 10	22 Nov 10	A	20 Aug 07	FX	01 Jun 07
	6	7	01203 n/a	B&B Drilling COI Revision 2	CERTIFICATES	FIO	mdl				A	20 Aug 07	F	01 Jun 07

RANGE : ALL

SORT : SECTION & ITEM

SUBMITTAL REGISTER (ER 415-1-10)

TITLE AND LOCATION: Rockaway Wellfield Superfund Site, EM/WS,Rockaway Borough, East Main/Wall Street, Morris County, NJ

DATE: 05 May 2011

CONTRACTOR: CAPE Environmental Management Inc.

CONTRACT NUMBER: W912DQ-05-D-0001 0005

ACTIVITY No.	TRANS-MITTAL No.	ITEM No.	SPEC PARAGRAPH No.	DESCRIPTION OF SUBMITTAL	TYPE OF SUBMITTAL	CLASSI-FICATION FIO GA, DA or CR	CONTRACTOR REVIEWER	CONTRACTOR SCHEDULE DATES SUBMIT NEEDED BY	APPROVAL NEEDED BY	MATERIAL NEEDED BY	CONTRACTOR ACTION CODE	CORPS RECEIVED DATE	GOVERNMENT ACTION CODE	CORPS RETURNED DATE
	7	8	01203	Ehrich Electric COI	CERTIFICATES	FIO	mdl				A	20 Aug 07	F	01 Jun 07
	8	9	01203	CAPE Certified Payroll PE051207	PRODUCT DATA	GA	mdl				A	20 Aug 07	E	07 Jun 07
	8	10	01203	CAPE Certified Payroll PE051907	PRODUCT DATA	GA	mdl				A	20 Aug 07	E	07 Jun 07
	9	11	01203	CDM COI	CERTIFICATES	FIO	mdl				A	20 Aug 07	F	20 Jun 07
	9.1	11.1	01203 1.2.3	CDM COI	CERTIFICATES	FIO	mdl				A	25 Jan 11	F	31 Jan 11
	10	12	01203	CAPE Certified Payroll 3	PRODUCT DATA	GA	mdl				A	20 Aug 07	A	20 Jun 07
	10	13	01203	CAPE Certified Payroll 4	PRODUCT DATA	GA	mdl				A	20 Aug 07	A	20 Jun 07
	11	14	01203	B&B Certifired Payroll 1	PRODUCT DATA	GA	mdl				A	20 Aug 07	A	20 Jun 07
	11	15	01203	B&B Certified Payroll 2	PRODUCT DATA	GA	mdl				A	20 Aug 07	A	20 Jun 07
	12	16	01203	USACE Computer Authorization	CERTIFICATES	FIO	mdl				A	20 Aug 07	F	09 Jul 07
	13	17	01203	CAPE Certified Payroll 6	PRODUCT DATA	GA	mdl				A	17 Aug 07	A	21 Aug 07
	14	18	01203	CAPE Certified Payroll 5	PRODUCT DATA	GA	mdl				A	20 Aug 07	A	20 Jul 07
	15	19	01203	Ehrich Electric Certified Payroll 1	PRODUCT DATA	GA	mdl				A	20 Aug 07	A	20 Jul 07
	16	25	01203	CAPE Certified Payroll 7	PRODUCT DATA	GA	mdl				A	20 Aug 07	A	20 Jul 07
	17	26	01203	CAPE Certified Payroll 8	PRODUCT DATA	GA	mdl				A	20 Aug 07	A	20 Jul 07
	18	27	01203	M&E Railway Permit	PRODUCT DATA	FIO	mdl				A	13 Aug 07	B	13 Aug 07
	19	28	01203	CAPE Certified Payroll 9	PRODUCT DATA	GA	mdl				A	20 Aug 07	A	20 Jul 07
	20	29	01203	CAPE Certified Payroll 10	PRODUCT DATA	GA	mdl				A	20 Aug 07	A	02 Aug 07
	20	30	01203	CAPE Certified Payroll 11	PRODUCT DATA	GA	mdl				A	20 Aug 07	A	02 Aug 07
	21	31	01203	CAPE Certified Payroll 12	PRODUCT DATA	GA	mdl				A	20 Aug 07	A	02 Aug 07
A0940	22	32	01203	WTDI COI	CERTIFICATES	FIO	mdl				A	16 Aug 07	F	21 Aug 07
A0970	23	33	01203	GWTTI COI	CERTIFICATES	FIO	mdl				A	18 Sep 07	F	19 Sep 07
	24	34	01203	CAPE Certified Payroll 13	PRODUCT DATA	GA	mdl				A	23 Aug 07	F	23 Aug 07
	24	35	01203	CAPE Certified Payroll 14	PRODUCT DATA	GA	mdl				A	23 Aug 07	F	23 Aug 07
	35	36	01203	CAPE Certified Payroll 15	PRODUCT DATA	GA	mdl				A	12 Oct 07	E	23 Oct 07
	35	37	01203	CAPE Certified Payroll 16	PRODUCT DATA	GA	mdl				A	12 Oct 07	E	23 Oct 07
	35	38	01203	B&B Drilling CP 3	PRODUCT DATA	GA	mdl				A	12 Oct 07	E	23 Oct 07
	35	39	01203	B&B Drilling CP 4	PRODUCT DATA	GA	mdl				A	12 Oct 07	E	23 Oct 07
	35	40	01203	B&B Drilling CP 5	PRODUCT DATA	GA	mdl				A	12 Oct 07	E	23 Oct 07
	35	41	01203	B&B Drilling CP 6	PRODUCT DATA	GA	mdl				A	12 Oct 07	E	23 Oct 07
	35	42	01203	B&B Drilling CP 7	PRODUCT DATA	GA	mdl				A	12 Oct 07	E	23 Oct 07
	35	43	01203	CAPE Certified Payroll 17	PRODUCT DATA	GA	mdl				A	12 Oct 07	E	23 Oct 07
	35	44	01203	B&B Drilling CP 8	PRODUCT DATA	GA	mdl				A	12 Oct 07	E	23 Oct 07
	30	45	01203	CAPE Certified Payroll 18	PRODUCT DATA	GA	mdl				A	21 Sep 07	F	27 Sep 07
	31	46	01203	B&B Drilling CP 9	PRODUCT DATA	GA	mdl				A	27 Sep 07	F	03 Oct 07

RANGE : ALL

SORT : SECTION & ITEM

SUBMITTAL REGISTER (ER 415-1-10)

TITLE AND LOCATION: Rockaway Wellfield Superfund Site, EM/WS,Rockaway Borough, East Main/Wall Street, Morris County, NJ

DATE: 05 May 2011

CONTRACTOR: CAPE Environmental Management Inc.

CONTRACT NUMBER: W912DQ-05-D-0001 0005

ACTIVITY No.	TRANS-MITTAL No.	ITEM No.	SPEC PARAGRAPH No.	DESCRIPTION OF SUBMITTAL	TYPE OF SUBMITTAL	CLASSI-FICATION FIO GA, DA or CR	CONTRACTOR REVIEWER	CONTRACTOR SCHEDULE DATES SUBMIT NEEDED BY	APPROVAL NEEDED BY	MATERIAL NEEDED BY	CONTRACTOR ACTION CODE	CORPS RECEIVED DATE	GOVERNMENT ACTION CODE	CORPS RETURNED DATE
	32	47	01203	CAPE Certified Payroll 19	PRODUCT DATA	GA	mdl				A	03 Oct 07	F	03 Oct 07
	33	48	01203	B&B Drilling CP 10	PRODUCT DATA	GA	mdl				A	03 Oct 07	F	03 Oct 07
	34	49	01203	CAPE Certified Payroll 20	PRODUCT DATA	FIO	mdl				A	03 Oct 07	F	12 Oct 07
	36	50	01203	CAPE's Certified Payroll 21	PRODUCT DATA	GA	mdl				A	16 Oct 07	F	23 Oct 07
	37	51	01203	B&B Drilling CP 11	PRODUCT DATA	GA	mdl				A	16 Oct 07	F	23 Oct 07
	38	52	01203	CAPE Certified Payroll 22	CERTIFICATES	FIO	mdl				A	29 Oct 07	F	31 Oct 07
	39	53	01203	B&B Drilling CP 12	PRODUCT DATA	GA	mdl				A	29 Oct 07	F	31 Oct 07
	40	54	01203	CAPE Certified Payroll 23	PRODUCT DATA	GA	mdl				A	15 Nov 07	F	15 Nov 07
	41	55	01203	CAPE Certified Payroll 24	PRODUCT DATA	GA	mdl				A	15 Nov 07	F	15 Nov 07
	42	56	01203	CAPE Certified Payroll 25	PRODUCT DATA	GA	mdl				A	29 Nov 07	F	29 Nov 07
	43	57	01203	B&B Drilling CP #13	PRODUCT DATA	GA					A	29 Nov 07	F	29 Nov 07
	44	58	01203	B&B CP Confirmed Completeness	STATEMENTS	GA	mdl				A	29 Nov 07	F	29 Nov 07
	45	59	01203	Cape Certified Payroll #26	STATEMENT	GA	mdl				A	29 Nov 07	G	02 Feb 11
	46	60	01203	Non-Haz Signature Signing Authorization	STATEMENT	GA	mdl				A	29 Nov 07	F	29 Nov 07
	47	61	01203	Third Party Signature Authorization	STATEMENT	FIO	mdl				A	29 Nov 07	F	29 Nov 07
A0380	48	62	01203	Road Opening Permit - Rockaway Borough		FIO	mdl				A	29 Nov 07	FX	29 Nov 07
	49	63	01203	CAPE Certified Payroll 27	CERTIFICATES	GA	mdl				A	12 Dec 07	F	12 Dec 07
	50	64	01203	CAPE Certified Payroll 28	CERTIFICATES	GA	mdl				A	12 Dec 07	F	12 Dec 07
	51	65	01203	CAPE Certified Payroll 29	CERTIFICATES	GA	mdl				A	12 Dec 07	F	12 Dec 07
	52	66	01203	CAPE Certified Payroll 30	PRODUCT DATA	GA	mdl				A	12 Dec 07	F	07 Jan 08
0003	53	67	01203	CAPE Certified Payroll 31 (w/e 12/8/07)	CERTIFICATES	GA	mdl				A	07 Jan 08	F	07 Jan 08
	54	68	01203	CAPE Certified Payroll 32 (w/e 12/15/07)	CERTIFICATES	GA	mdl				A	18 Jan 08	F	04 Feb 08
	55	69	01203	CAPE Certified Payroll 33 (w/e 12/22/07)	CERTIFICATES	GA	mdl				A	18 Jan 08	F	04 Feb 08
	56	70	01203	CAPE Certified Payroll 34 (w/e 12/29/07)	CERTIFICATES	GA	mdl				A	18 Jan 08	F	04 Feb 08
	57	71	01203	CAPE Certified Payroll 35 (w/e 1/5/08)	CERTIFICATES	FIO	mdl				A	18 Jan 08	F	04 Feb 08
	58	72	01203	Cape CP #36; w/e 1/12/2008	CERTIFICATES	GA	mdl				A	27 Feb 08	F	29 Feb 08
	59	73	01203	CAPE Certified Payroll 37 (w/e 1/19/08)	CERTIFICATES	GA	mdl				A	04 Feb 08	F	04 Feb 08
	60	74	01203	CDM COI expires 1/1/09	CERTIFICATES	FIO	mdl				A	21 Feb 08	F	29 Feb 08
	61	75	01203	CAPE Certified Payroll 38 (w/e 1/26/08)	CERTIFICATES	GA	mdl				A	21 Feb 08	F	21 Feb 08
	62	76	01203	CAPE Certified Payroll 39 (w/e 2/2/08)	CERTIFICATES	GA	mdl				A	21 Feb 08	F	21 Feb 08
	63	77	01203	CAPE Certified Payroll 40 (WE 2/9/08)	CERTIFICATES	GA	mdl				A	19 Mar 08	F	19 May 08
	64	78	01203	CAPE Certified Payroll 41 (WE 2/16/08)	CERTIFICATES	FIO	mdl				A	19 Mar 08	F	19 May 08
	65	79	01203	CAPE Certified Payroll 42 (WE 2/23/08)	CERTIFICATES	FIO	mdl				A	19 Mar 08	F	19 May 08
	66	80	01203	ANS Consultants COI expires 07FEB09	CERTIFICATES	FIO	mdl				A	19 Mar 08	F	19 May 08
	67	81	01203	CAPE Certified Payroll 43 (WE 3/01/08)	CERTIFICATES	FIO	mdl				A	19 Mar 08	F	19 May 08

RANGE : ALL

SORT : SECTION & ITEM

SUBMITTAL REGISTER (ER 415-1-10)

TITLE AND LOCATION: Rockaway Wellfield Superfund Site, EM/WS,Rockaway Borough, East Main/Wall Street, Morris County, NJ

DATE: 05 May 2011

CONTRACTOR: CAPE Environmental Management Inc.

CONTRACT NUMBER: W912DQ-05-D-0001 0005

ACTIVITY No.	TRANS-MITTAL No.	ITEM No.	SPEC PARAGRAPH No.	DESCRIPTION OF SUBMITTAL	TYPE OF SUBMITTAL	CLASSI-FICATION FIO GA, DA or CR	CONTRACTOR REVIEWER	CONTRACTOR SCHEDULE DATES SUBMIT NEEDED BY	APPROVAL NEEDED BY	MATERIAL NEEDED BY	CONTRACTOR ACTION CODE	CORPS RECEIVED DATE	GOVERNMENT ACTION CODE	CORPS RETURNED DATE
	68	82	01203	CAPE Certified Payroll 044 (WE 3/8/08)	CERTIFICATES	FIO	mdl				A	29 Apr 08	F	19 May 08
	69	83	01203	CAPE Certified Payroll 045 (WE 3/15/08)	CERTIFICATES	FIO	mdl				A	29 Apr 08	F	19 May 08
	70	84	01203	CAPE Certified Payroll 046 (WE 3/22/08)	CERTIFICATES	FIO	mdl				A	29 Apr 08	F	19 May 08
	71	85	01203	CAPE Certified Payroll 047 (WE 3/29/08)	CERTIFICATES	FIO	mdl				A	29 Apr 08	F	19 May 08
	72	86	01203	CAPE Certified Payroll 048 (WE 4/5/08)	CERTIFICATES	FIO	mdl				A	29 Apr 08	F	19 May 08
		87	01203	CAPE Certified Payroll 049 (WE 4/12/08)	CERTIFICATES	FIO	mdl							
		88	01203	CAPE Certified Payroll 050 (WE 4/19/08)	CERTIFICATES	FIO	mdl							
		89	01203	CAPE Certified Payroll 051 (WE 4/26/08)	CERTIFICATES	FIO	mdl							
	73	90	01203	CAPE Certified Payroll 052 (WE 5/3/08)	CERTIFICATES	FIO	mdl				A	13 Jun 08	F	01 Jul 08
	74	91	01203	CFO Delegation of Authority Letter	PRODUCT DATA	FIO	mdl				A	16 Aug 08	G	02 Feb 11
	75	92	01203	CAPE Certified Payroll 056 (WE 8/9/08)	CERTIFICATES	GA	mdl				A	05 Sep 08	F	16 Aug 10
	76	93	01203	CAPE Certified Payroll 057 (WE 8/22/08)	CERTIFICATES	GA	mdl				A	05 Sep 08	F	16 Aug 10
	77	94	01203	CAPE Certified Payroll 058 (WE 8/29/08)	CERTIFICATES	GA					A	06 Sep 08	F	16 Aug 10
	78	95	01203	CAPE Certificate of Insurance 05/01/2011		GA					A	30 Jun 10	F	16 Aug 10
	79	96	01203	CDM Certificate of Insurance 01/01/2011		DA/CR					A	26 Jul 10	F	26 Jul 10
	80	97	01203	B&B Certificate of Insurance 05/09/2011		GA					A	26 Jul 10	F	26 Jul 10
	81	98	01203	B&B Drilling CP #14		DA/CR					A	26 Jul 10	F	26 Jul 10
	82	99	01203 1.3	LAN Certificate of Insurance 05/01/2011	CERTIFICATES	FIO					A	27 Sep 10	F	28 Sep 10
	83	100	01203 1.3	Tectonic Cert of Insurance 09/18/2011	CERTIFICATES	FIO					A	30 Sep 10	F	15 Oct 10
	84	101	01203 1.1	ANS Consultants SF1413	PRECON SUBMTL	FIO					A	20 Oct 10	F	26 Oct 10
0001	85	102	01203 1.3	ANS Consultants COI 02/07/2011		FIO		22 Nov 10	22 Nov 10	22 Nov 10	A	20 Oct 10	F	26 Oct 10
	86	103	01203 1.3	TTI Environmental COI 04/26/2011	PRECON SUBMTL	FIO					A	26 Oct 10	F	26 Oct 10
	87	104	01203 1.1	ANS Consultants Certified Payroll #1	RECORDS	GA					A	10 Nov 10	F	15 Nov 10
	88.1	105	01203	Superintendent DoA - Morrison 17NOV2010	PRECON SUBMTL	GA	mdl				A	18 Apr 11	B	20 Apr 11
	89	106	01203	AltSuperintendent DoA - Landle 17NOV2010	PRECON SUBMTL	GA	mdl				A	24 Nov 10	B	16 Dec 10
	90	107	01203	GWTTI Cert of Insurance	PRECON SUBMTL	FIO	mdl				A	24 Nov 10	F	02 Dec 10
	91	108	01203 1.1	AbateTech Cert of Insurance	PRECON SUBMTL	FIO	mdl				A	24 Nov 10	F	02 Dec 10
	92	109	01203	GWTTI SF-1413	PRECON SUBMTL	FIO	mdl				A	24 Nov 10	F	02 Dec 10
	92.1	109.1	01203 1.2.3	GWTTI SF-1413	PRODUCT DATA	FIO	mdl				A	01 Dec 10	F	06 Dec 10
	96	110	01203 1.2.3	AbateTech SF-1413	PRECON SUBMTL	FIO	mdl				A	08 Feb 11	F	09 Feb 11
	94	111	01203 1.1	Ehrich Electric Cert of Insurance	PRECON SUBMTL	FIO	mdl				A	24 Nov 10	F	06 Dec 10
	95	112	01203 1.1	Soil Safe Cert of Insurance	PRECON SUBMTL	FIO	mdl				A	24 Nov 10	F	06 Dec 10
	95.1	112.1	01203 1.2.3	Soil Safe COI	CERTIFICATES	FIO	mdl				A	27 Jan 11	F	31 Jan 11
	100	113	01203 1.2.1	Project Organizational Chart	PRODUCT DATA	GA	mdl				A	07 Dec 10	C	16 Dec 10
	100.1	113.1	01203 1.2.1	Project Organizational Chart	PRODUCT DATA	GA	mdl				A	19 Jan 11	B	04 Feb 11

RANGE : ALL

SORT : SECTION & ITEM

SUBMITTAL REGISTER (ER 415-1-10)

TITLE AND LOCATION: Rockaway Wellfield Superfund Site, EM/WS,Rockaway Borough, East Main/Wall Street, Morris County, NJ

DATE: 05 May 2011

CONTRACTOR: CAPE Environmental Management Inc.

CONTRACT NUMBER: W912DQ-05-D-0001 0005

ACTIVITY No.	TRANS-MITTAL No.	ITEM No.	SPEC PARAGRAPH No.	DESCRIPTION OF SUBMITTAL	TYPE OF SUBMITTAL	CLASSI-FICATION FIO GA, DA or CR	CONTRACTOR REVIEWER	CONTRACTOR SCHEDULE DATES: SUBMIT NEEDED BY	APPROVAL NEEDED BY	MATERIAL NEEDED BY	CONTRACTOR ACTION: CODE	CORPS RECEIVED DATE	GOVERNMENT ACTION: CODE	CORPS RETURNED DATE
	101	114	01203 1.2.2	Project Manager Name and Experience	PRODUCT DATA	GA	mdl				A	03 Dec 10	B	16 Dec 10
	98	115	01203 1.2.3	M&E Tree Svc SF1413	PRODUCT DATA	FIO	mdl				A	06 Dec 10	F	06 Dec 10
	97	116	01203 1.2.3	A.C. Schultes COI	PRODUCT DATA	FIO	mdl				A	06 Dec 10	F	06 Dec 10
	99	117	01203 1.2.3	M&E Tree Svc COI	PRODUCT DATA	FIO	mdl				A	06 Dec 10	F	06 Dec 10
	102.1	118	01203 1.2.3	AbateTech CP#1	PRODUCT DATA	FIO	mdl				A	26 Jan 11	F	31 Jan 11
	103	119	01203 1.2.3	Maddox Materials SF-1413	PRODUCT DATA	FIO	mdl				A	07 Dec 10	F	09 Dec 10
	104	120	01203 1.2.3	Maddox Materials COI	PRODUCT DATA	FIO	mdl				A	07 Dec 10	F	09 Dec 10
	104.1	120.1	01203 1.2.3	Maddox Materials COI	CERTIFICATES	FIO	mdl				A	26 Jan 11	F	31 Jan 11
	105	121	01203 1.2.3	GWTTI CP#1	PRODUCT DATA	FIO	mdl				A	07 Dec 10	F	09 Dec 10
	106.1	122	01203 1.2.3	BL Myers COI	PRODUCT DATA	FIO	mdl				A	19 Jan 11	F	24 Jan 11
	107	123	01203 1.2.3	Alimi Construction COI	CERTIFICATES	FIO	mdl				A	13 Dec 10	F	29 Dec 10
	108	124	01203 1.2.3	GWTTI CP#2 04DEC2010	CERTIFICATES	FIO	mdl				A	28 Dec 11	F	28 Jan 10
	109	125	01203 1.2.3	M&E Tree Svc CP#1	CERTIFICATES	FIO	mdl				A	08 Feb 11	F	09 Feb 11
	110	126	01203 1.2.3	Advanced Geological Svcs COI	CERTIFICATES	FIO	mdl				A	17 Dec 10	F	29 Dec 10
	111	127	01203 1.2.3	First Class Trucking CP#1	CERTIFICATES	FIO	mdl				A	08 Feb 11	F	09 Feb 11
	112	128	01203 1.2.3	Hawk Drilling COI	CERTIFICATES	FIO	mdl				A	17 Dec 10	F	29 Dec 10
	113	129	01203 1.2.3	First Class Trucking CP#2	CERTIFICATES	FIO	mdl				A	08 Feb 11	F	09 Feb 11
	114	130	01203 1.2.3	Alimi Builders SF-1413	CERTIFICATES	FIO	mdl				A	07 Jan 11	F	29 Dec 10
	115	131	01203 1.2.3	Hager-Richter Geoscience, Inc. COI	CERTIFICATES	FIO	mdl				A	22 Dec 10	F	29 Dec 10
	116	132	01203 1.2.3	Frontz Drilling CP#1	CERTIFICATES	FIO	mdl				A	07 Jan 11	F	11 Jan 11
	117.1	133	01203 1.2.3	Ehrich Elec CP 2010-12-11	CERTIFICATES	FIO	mdl				A	27 Jan 11	F	31 Jan 11
	118	134	01203 1.2.3	Frontz Drilling 2010-12-26	CERTIFICATES	FIO	mdl				A	07 Jan 11	F	11 Jan 11
	119.1	135	01203 1.2.3	Maddox Mat'ls CP 2010-12-19	CERTIFICATES	FIO	mdl				A	26 Jan 11	F	31 Jan 11
	120.1	136	01203 1.2.3	GWTTI CP 2010-12-11	CERTIFICATES	FIO	mdl				A	26 Jan 11	F	31 Jan 11
	121	137	01203 1.2.3	Superintendent DoA - McNeil 14JAN2011	PRODUCT DATA	GA	mdl				A	17 Jan 11	B	19 Jan 11
	122	138	01203 1.2.3	Alt Super DoA - Morrison 14JAN2011	PRODUCT DATA	GA	mdl				A	17 Jan 11	B	19 Jan 11
	123	139	01203 1.2.3	Ehrich Elec CP 18DEC2010	CERTIFICATES	FIO	mdl				A	19 Jan 11	F	31 Jan 11
	124	140	01203 1.2.3	Ehrich Elec CP 25DEC2010	PRODUCT DATA	FIO	mdl				A	19 Jan 11	F	31 Jan 11
	125	141	01203 1.2.3	GWTTI CP 2010-12-18	CERTIFICATES	FIO	mdl				A	26 Jan 11	F	31 Jan 11
	126	142	01203 1.2.3	GWTTI CP 2010-12-25	CERTIFICATES	FIO	mdl				A	26 Jan 11	F	31 Jan 11
	127	143	01203 1.2.3	AC Schultes SF-1413	CERTIFICATES	FIO	mdl				A	08 Feb 11	F	10 Feb 11
	128	144	01203 1.2.3	GWTTI CP 15JAN2011	CERTIFICATES	FIO	mdl				A	10 Feb 11	F	11 Feb 11
	129	145	01203 1.2.3	Maddox Materials CP 23JAN2011	CERTIFICATES	FIO	mdl				A	10 Feb 11	F	11 Feb 11
	130	146	01203 1.2.3	Maddox Materials CP 30JAN2011	CERTIFICATES	FIO	mdl				A	10 Feb 11	F	11 Feb 11
	131	147	01203 1.2.3	AC Schultes CP 16JAN2011	CERTIFICATES	FIO	mdl				A	10 Feb 11	F	11 Feb 11

RANGE : ALL

SORT : SECTION & ITEM

SUBMITTAL REGISTER (ER 415-1-10)

TITLE AND LOCATION: Rockaway Wellfield Superfund Site, EM/WS,Rockaway Borough, East Main/Wall Street, Morris County, NJ

DATE: 05 May 2011

CONTRACTOR: CAPE Environmental Management Inc.

CONTRACT NUMBER: W912DQ-05-D-0001 0005

ACTIVITY No.	TRANS-MITTAL No.	ITEM No.	SPEC PARAGRAPH No.	DESCRIPTION OF SUBMITTAL	TYPE OF SUBMITTAL	CLASSI-FICATION FIO GA, DA or CR	CONTRACTOR REVIEWER	CONTRACTOR SCHEDULE DATES SUBMIT NEEDED BY	APPROVAL NEEDED BY	MATERIAL NEEDED BY	CONTRACTOR ACTION CODE	CORPS RECEIVED DATE	GOVERNMENT ACTION CODE	CORPS RETURNED DATE
	132	148	01203 1.2.3	Ehrich Electric Cert. Payroll 1/15/11	CERTIFICATES	FIO	mdl				A	15 Feb 11	F	15 Feb 11
	133	149	01203 1.2.3	Ehrich Electric Cert. Payroll 1/29/11	CERTIFICATES	FIO	mdl				A	15 Feb 11	F	15 Feb 11
	134	150	01203 1.2.3	Ehrich Electric Cert Payroll 2/5/11	CERTIFICATES	FIO	mdl				A	14 Feb 11	F	15 Feb 11
	135	151	01203 1.2.3	First Class Truck Cert Payroll 2/6/11	CERTIFICATES	FIO	mdl				A	14 Feb 11	F	15 Feb 11
	136	152	01203 1.2.3	Abbott O'Reilly SF1413	CERTIFICATES	FIO	mdl				A	17 Feb 10	F	21 Feb 11
	137	153	01203 1.2.3	Abbott O'Reilly COI	CERTIFICATES	FIO	mdl				A	08 Mar 11	F	12 Mar 11
	138	154	01203 1.2.3	CAPE Cert Payroll 1/22/11	CERTIFICATES	FIO	mdl				A	17 Feb 11	F	22 Feb 11
	139	155	01203 1.2.3	CAPE Cert Payroll 1/29/11	CERTIFICATES	FIO	mdl				A	17 Feb 11	E	22 Feb 11
	140	156	01203 1.2.3	Forte Plumbing - Cert of Insurance	CERTIFICATES	FIO	mdl				A	22 Feb 11	F	24 Feb 11
	141	157	01203 1.2.3	Rainbow Transport Cert of Insurance	CERTIFICATES	FIO	mdl				A	22 Feb 11	F	24 Feb 11
	142	158	01203 1.2.3	Miller Drilling Cert of Insurance	CERTIFICATES	FIO	mdl				A	28 Feb 11	F	28 Feb 11
	143	159	01203 1.2.3	Intex Certificate of Insurance	CERTIFICATES	FIO	mdl				A	19 Mar 11	F	19 Mar 11
	144	160	01203 1.2.3	Intex SF-1413	CERTIFICATES	FIO	mdl				A	28 Feb 11	F	03 Mar 11
	145	161	01203 1.2.3	Morris Security SF1413	CERTIFICATES	FIO	mdl				A	28 Feb 11	F	03 Mar 11
	146	162	01203 1.2.3	First Class Truck Cert Payroll 2/26/11	CERTIFICATES	FIO	mdl				A	01 Mar 11	F	07 Mar 11
	147	163	01203 1.2.3	CAPE Cert Payroll 2/5/11	CERTIFICATES	FIO	mdl				A	07 Mar 11	F	08 Mar 11
	148	164	01203 1.2.3	CAPE Cert Payroll 2/12/11	CERTIFICATES	FIO	mdl				A	01 Mar 11	F	14 Mar 11
	149	165	01203 1.2.3	CAPE Cert Payroll 2/19/11	CERTIFICATES	FIO	mdl				A	01 Mar 11	F	14 Mar 11
	150	166	01203 1.2.3	CAPE Cert Payroll 2/26/11	CERTIFICATES	FIO	mdl				A	01 Mar 11	F	14 Mar 11
	151	167	01203 1.2.3	Ehrich Electric Cert Payroll 2/12/11	CERTIFICATES	FIO	mdl				A	01 Mar 11	F	14 Mar 11
	152	168	01203 1.2.3	Ehrich Electric Cert Payroll 2/26/11	CERTIFICATES	FIO	mdl				A	01 Mar 11	F	14 Mar 11
	153	169	01203 1.2.3	Miller Drilling SF-1413	CERTIFICATES	FIO	mdl				A	02 Mar 11	F	07 Mar 11
	154	170	01203 1.2.3	F Ramos Trucking Cert of Insurance	CERTIFICATES	FIO	mdl				A	02 Mar 11	F	07 Mar 11
	155	171	01203 1.2.3	Reilly Sweeping Cert of Insurance	CERTIFICATES	FIO	mdl				A	02 Mar 11	F	07 Mar 11
	156	172	01203 1.2.3	Bigler Associates Cert of Insurance	CERTIFICATES	FIO	mdl				A	06 Mar 11	F	08 Mar 11
	157	173	01203 1.2.3	Reilly Sweeping SF1413	CERTIFICATES	FIO	mdl				A	08 Mar 11	F	12 Mar 11
	158	174	01203 1.2.3	First Class Truck Cert Payroll 3/09/11	CERTIFICATES	FIO	mdl				A	19 Mar 11	F	19 Mar 11
	159	175	01203 1.2.3	CAPE Cert Payroll 3/05/11	CERTIFICATES	FIO	mdl				A	18 Mar 11	F	
	160	176	01203 1.2.3	Alimi Certified Payroll 3/6/11	CERTIFICATES	FIO	mdl				A	18 Mar 11	F	
	161	177	01203 1.2.3	Morris Secuirty Certificate of Insurance	CERTIFICATES	FIO	mdl				A	18 Mar 11	F	
	162	178	01203 1.2.3	Atlantis Energy Cert of Insurance	CERTIFICATES	FIO	mdl				A	23 Mar 11	F	25 Mar 11
	163	179	01203 1.2.3	Semcor SF1413	CERTIFICATES	FIO	mdl				A	23 Mar 11	A	28 Mar 11
	164	180	01203 1.2.3	CAPE Cert Payroll 3/12/11	CERTIFICATES	FIO	mdl				A	28 Mar 11	F	01 Apr 11
	165	181	01203 1.2.3	York Fencing Certificate of Insurance	CERTIFICATES	FIO	mdl				A	28 Mar 11	F	01 Apr 11
	166	182	01203 1.2.3	York Fencing SF1413	CERTIFICATES	FIO	mdl				A	08 Apr 11	F	08 Apr 11

RANGE : ALL

SORT : SECTION & ITEM

SUBMITTAL REGISTER (ER 415-1-10)

TITLE AND LOCATION Rockaway Wellfield Superfund Site, EM/WS,Rockaway Borough, East Main/Wall Street, Morris County, NJ

DATE 05 May 2011

CONTRACTOR CAPE Environmental Management Inc.

CONTRACT NUMBER W912DQ-05-D-0001 0005

ACTIVITY No.	TRANS-MITTAL No.	ITEM No.	SPEC PARAGRAPH No.	DESCRIPTION OF SUBMITTAL	TYPE OF SUBMITTAL	CLASSI-FICATION FIO GA, DA or CR	CONTRACTOR REVIEWER	CONTRACTOR SCHEDULE DATES SUBMIT NEEDED BY	APPROVAL NEEDED BY	MATERIAL NEEDED BY	CONTRACTOR ACTION CODE	CORPS RECEIVED DATE	GOVERNMENT ACTION CODE	CORPS RETURNED DATE
	167	183	01203 1.2.3	Miller Drilling Cert Payroll 3-12-11	CERTIFICATES	FIO	mdl				A	29 Mar 11	F	01 Apr 11
	168	184	01203 1.2.3	Miller Drilling Cert Payroll 3-19-11	CERTIFICATES	FIO	mdl				A	29 Mar 11	F	01 Apr 11
	169	185	01203 1.2.3	CAPE Cert Payroll 3/19/11	CERTIFICATES	FIO	mdl				A	30 Mar 11	F	01 Apr 11
	170	186	01203 1.2.3	Pave-Rite SF1413	CERTIFICATES	FIO	mdl				A	31 Mar 11	F	18 Apr 11
	171	187	01203 1.2.3	Forte Plumbing SF1413	CERTIFICATES	FIO	mdl				A	31 Mar 11	F	08 Apr 11
	172.1	188	01203 1.2.3	Alimi Certified Payroll 3/13/11	CERTIFICATES	FIO	mdl				A	29 Apr 11	F	29 Apr 11
	173.1	189	01203 1.2.3	Alimi Certified Payroll 3/20/11	CERTIFICATES	FIO	mdl				A	29 Apr 11	F	29 Apr 11
	174	190	01203 1.2.3	First Class Truck Cert Payroll 3-22-11	CERTIFICATES	FIO	mdl				A	04 Apr 11	F	08 Apr 11
	175	191	01203 1.2.3	CAPE Cert Payroll 3/26/11	CERTIFICATES	FIO	mdl				A	07 Apr 11	F	08 Apr 11
	176	192	01203 1.2.3	York Fencing Cert Payroll 3-28-11	CERTIFICATES	FIO	mdl				A	07 Apr 11	F	08 Apr 11
	177	193	01203 1.2.3	Semcor Cert of Insurance	CERTIFICATES	FIO	mdl				A	07 Apr 11	F	18 Apr 11
	178	194	01203 1.2.3	Alimi Certified Payroll 3/27/11	CERTIFICATES	FIO	mdl				A	13 Apr 11	F	18 Apr 11
	179	195	01203 1.2.3	First Class Truck Cert Payroll 4-01-11	CERTIFICATES	FIO	mdl				A	13 Apr 11	F	18 Apr 11
	180	196	01203 1.2.3	Alimi Certified Payroll 4-3-11	CERTIFICATES	FIO	mdl				A	18 Apr 11	F	20 Apr 11
	181	197	01203 1.2.3	Ehrich Electric Cert Payroll 3/5/11	CERTIFICATES	FIO	mdl				A	18 Apr 11	F	20 Apr 11
	182	198	01203 1.2.3	Ehrich Electric Cert Payroll 3-26-11	CERTIFICATES	FIO	mdl				A	18 Apr 11	F	20 Apr 11
	183	199	01203 1.2.3	Ehrich Electric Cert Payroll 4-2-11	CERTIFICATES	FIO	mdl				A	18 Apr 11	F	20 Apr 11
	184.1	200	01203 1.2.3	CAPE Cert Payroll 4-2-11	CERTIFICATES	FIO	mdl				A	29 Apr 11	F	29 Apr 11
	185.1	201	01203 1.2.3	Miller Drilling Cert Payroll 3-26-11	CERTIFICATES	FIO	mdl				A	29 Apr 11		
	186.1	202	01203 1.2.3	Miller Drilling Cert Payroll 4/2/11	CERTIFICATES	FIO	mdl				A	29 Apr 11		
	187.1	203	01203 1.2.3	Miller Drilling Cert Payroll 4/9/11	CERTIFICATES	FIO	mdl				A	29 Apr 11		
	188	204	01203 1.2.3	Reilly Sweeping Cert Payroll 4-10-11	CERTIFICATES	FIO	mdl				A	20 Apr 11	F	21 Apr 11
	189	205	01203 1.2.3	CAPE Cert Payroll 4-9-11	CERTIFICATES	FIO	mdl				A	29 Apr 11	F	29 Apr 11
	190	206	01203 1.2.3	Alimi Certified Payroll 4-10-11	CERTIFICATES	FIO	mdl				A	29 Apr 11	F	29 Apr 11
SECTION - 01270			**Measurement and Payment**											
0001	1	1	01270	Pay Estimate 001 (Partial)	CERTIFICATES	GA	mdl	22 Nov 10	22 Nov 10	22 Nov 10	A	20 Aug 07	A	20 Aug 07
0001	2	2	01270	Pay Estimate 002 (Partial)	CERTIFICATES	GA	mdl	22 Nov 10	22 Nov 10	22 Nov 10	A	20 Aug 07	A	20 Aug 07
	3	3	01270	Pay Estimate 003 (partial)	CERTIFICATES	GA	mdl				A	20 Aug 07	A	20 Aug 07
	4	4	01270	Pay Estimate 004 (partial)	CERTIFICATES	GA	mdl				A	20 Aug 07	A	20 Aug 07
	5	5	01270	Pay Estimate 005 (partial)	CERTIFICATES	GA	mdl				A	29 Aug 07	F	30 Aug 07
	6	6	01270	Pay Estimate 006 (partial)	CERTIFICATES	GA	mdl				A	27 Sep 07	A	20 Sep 07
	7	7	01270	Pay Estimate 007 (partial)	CERTIFICATES	GA	mdl				A	29 Oct 07	A	29 Oct 07
	8	8	01270	Pay Estimate 008 (partial)	CERTIFICATES	GA	mdl				A	12 Dec 07	A	19 Dec 07
	9	9	01270	Pay Estimate 009 (partial)	CERTIFICATES	GA	mdl				A	18 Jan 08	A	18 Feb 08
	10	10	01270	Pay Estimate 010 (partial)	CERTIFICATES	GA	mdl				A	25 Feb 08	A	25 Feb 08

RANGE : ALL

SORT : SECTION & ITEM

SUBMITTAL REGISTER (ER 415-1-10)

TITLE AND LOCATION: Rockaway Wellfield Superfund Site, EM/WS,Rockaway Borough, East Main/Wall Street, Morris County, NJ

DATE: 05 May 2011

CONTRACTOR: CAPE Environmental Management Inc.

CONTRACT NUMBER: W912DQ-05-D-0001 0005

ACTIVITY No.	TRANS-MITTAL No.	ITEM No.	SPEC PARAGRAPH No.	DESCRIPTION OF SUBMITTAL	TYPE OF SUBMITTAL	CLASSI-FICATION FIO GA, DA or CR	CONTRACTOR REVIEWER	CONTRACTOR SCHEDULE DATES: SUBMIT NEEDED BY	CONTRACTOR SCHEDULE DATES: APPROVAL NEEDED BY	CONTRACTOR SCHEDULE DATES: MATERIAL NEEDED BY	CONTRACTOR ACTION: CODE	CONTRACTOR ACTION: CORPS RECEIVED DATE	GOVERNMENT ACTION: CODE	GOVERNMENT ACTION: CORPS RETURNED DATE
	11	11	01270	Pay Estimate 011 (partial)	CERTIFICATES	GA	mdl				A	19 Mar 08	F	16 Aug 10
SECTION - 01320			**Project Schedule**											
0001	1	1	01320 1.4.1	Preliminary Project Schedule	PRECON SUBMTL	GA	mdl	22 Nov 10	22 Nov 10	22 Nov 10	A	20 Aug 07	C	07 May 07
	2	2	01320 1.4.3	Periodic Update 01	PRODUCT DATA	GA	mdl				A	12 Sep 07	B	12 Sep 07
	5	2.2	01320	Periodic Update, Rev 2	PRODUCT DATA	GA	mdl				A	12 Dec 07	C	12 Dec 07
	3	3	01320	Periodic Update 02	PRODUCT DATA	FIO	mdl				A	29 Oct 07	E	02 Nov 07
	4	4	01320	Periodic Update 02, rev#1	PRODUCT DATA	FIO					A	29 Nov 07	E	29 Nov 07
	6	5	01320	Periodic Schedule Update 005	PRODUCT DATA	FIO					A	14 May 10	F	27 May 10
	7	6	01320	Periodic Schedule Update 006		DA/CR					A	14 Jun 10	B	16 Jul 10
	8	7	01320	Periodic Schedule Update 007	SCHEDULES	GA					A	12 Aug 10	B	16 Aug 10
	9	8	01320 1.8	Periodic Schedule Update 008	SCHEDULES	DA/CR					A	08 Sep 10	B	10 Sep 10
	10.1	9	01320 1.8	Periodic Schedule Update 009	SCHEDULES	DA/CR					A	19 Nov 10	FX	19 Nov 10
	11	9.1	01320 1.8	Periodic Schedule Update 010	SCHEDULES	GA					A	15 Nov 11	B	22 Nov 10
	12	10	01320 1.4.3	Periodic Schedule Update 011	PRODUCT DATA	GA	mdl				A	17 Dec 10	C	07 Jan 11
		11	01320 1.4.2	Initial Project Schedule	PRODUCT DATA	GA								
	13	12	01320 1.4.3	Periodic Schedule Update 012	PRODUCT DATA	GA	mdl				A	19 Jan 11	B	31 Jan 11
	14	13	01320 1.4.3	Periodic Schedule Update 013	PRODUCT DATA	GA	mdl				A	01 Mar 11	B	25 Mar 11
	15	14	01320 1.4.3	Periodic Schedule Update 014	PRODUCT DATA	GA	mdl				A	31 Mar 11	B	18 Apr 11
SECTION - 01351			**Safety, Health & Emer Response-HTRW/UST**											
0001	1	1	01351 1.3.1	Accident Prevention Plan - DRAFT	PRECON SUBMTL	GA	mdl	22 Nov 10	22 Nov 10	22 Nov 10	A	20 Aug 07	F	22 Jan 08
0001	2	1.2	01351 1.3.1	Accident Prevention Plan - FINAL	PRECON SUBMTL	GA	mdl	22 Nov 10	22 Nov 10	22 Nov 10	A	20 Aug 07	G	02 Feb 11
0001	2	2	01351 1.3.1	RTC - Draft APP	PRECON SUBMTL	GA	mdl	22 Nov 10	22 Nov 10	22 Nov 10	A	20 Aug 07	G	02 Feb 11
0001	3	3	01351	SSHO Delegation of Authority	QUALIFICATIONS	GA	mdl	22 Nov 10	22 Nov 10	22 Nov 10	A	20 Aug 07	G	02 Feb 11
A0940		6	01351 1.3.3	Activity Hazard Analysis		GA	mdl							
		7	01351 1.3.4	Air Monitoring Data		FIO								
		8	01351 1.3.5	Personnel Health and Safety Certificates		FIO								
		9	01351 1.3.6	Safety and Health Manager Statements		FIO								
		10	01351 1.3.7	Certificate of Worker/Visitor Acknowledg		FIO								
		11	01351 1.3.8	Project Safety and Health Phase-Out Repo		FIO								
		12	01351	CAPE Delegation of Authority (SSHO) Lett		GA								
	4	13	01351	SSHO Delegation Letter-070725	QUALIFICATIONS	GA	mdl				A	20 Aug 07	F	20 Aug 07
	5	14	01351	SSHO Delegation of Authority-070807	QUALIFICATIONS	GA	mdl				A	13 Aug 07	F	13 Aug 07
	6	15	01351 1.2	Accident Prevention Plan, Revision 1	PRECON SUBMTL	GA	mdl				A	23 Aug 07	A	28 Aug 07
	2.2	15.1	01351 1.3.1	Accident Prevention Plan, Rev 2	PRECON SUBMTL	GA	mdl				A	11 Apr 11	C	21 Apr 11
	7	16	01351	SSHO DoA - McNeil 17NOV2010	PRECON SUBMTL	GA	mdl				A	24 Nov 10	E	16 Dec 10

RANGE : ALL

SORT : SECTION & ITEM

SUBMITTAL REGISTER (ER 415-1-10)

TITLE AND LOCATION: Rockaway Wellfield Superfund Site, EM/WS,Rockaway Borough, East Main/Wall Street, Morris County, NJ

DATE: 05 May 2011

CONTRACTOR: CAPE Environmental Management Inc.

CONTRACT NUMBER: W912DQ-05-D-0001 0005

ACTIVITY No.	TRANS-MITTAL No.	ITEM No.	SPEC PARAGRAPH No.	DESCRIPTION OF SUBMITTAL	TYPE OF SUBMITTAL	CLASSI-FICATION FIO GA, DA or CR	CONTRACTOR REVIEWER	CONTRACTOR SCHEDULE DATES: SUBMIT NEEDED BY	APPROVAL NEEDED BY	MATERIAL NEEDED BY	CONTRACTOR ACTION: CODE	CORPS RECEIVED DATE	GOVERNMENT ACTION: CODE	CORPS RETURNED DATE
	8	17	01351	Alt SSHO DoA - Beatty 17NOV2010	PRECON SUBMTL	GA	mdl				A	24 Nov 10	A	16 Dec 10
	9	18	01351	Alt SSHO DoA - Ferroni 17NOV2010	PRECON SUBMTL	GA	mdl				A	24 Nov 10	C	16 Dec 10
		19	01351 1.3.1	Site Safety and Health Plan	PRECON SUBMTL	GA								
		20	01351 1.3.2	Weekly Safety and Accident Reports	PRODUCT DATA	FIO								
		21	01351 1.3.3	Activity Hazard Analysis	PRODUCT DATA	GA								
		22	01351 1.3.4	Air Monitoring Data	PRODUCT DATA	FIO								
		23	01351 1.3.5	Personnel Health and Safety Certificates	CERTIFICATES	FIO								
		24	01351 1.3.6	Safety and Health Manager Statements	CERTIFICATES	FIO								
		25	01351 1.3.7	Certificate of Worker/Visitor Acknowledg	CERTIFICATES	FIO								
		26	01351 1.3.8	Project Safety and Health Phase-Out Repo	CLOSEOUT SUBMTL	FIO								
	10	27	01351 1.3.1	Lead Hazard Compliance Plan	PRECON SUBMTL	GA	mdl				A	07 Dec 10	B	04 Feb 11
	11	28	01351 1.3.1	Asbestos Hazard Abatement Plan	PRECON SUBMTL	GA	mdl				A	07 Dec 10	B	04 Feb 11
	12	29	01351 1.2.3	SSHO DoA - Landle 14JAN2011		GA	mdl				A	17 Jan 11	B	19 Jan 11
	13	30	01351 1.2.3	2nd Alt SSHO DoA - Caudill 20APR2011	PRODUCT DATA	GA	mdl				A	20 Apr 11	C	28 Apr 11
SECTION - 01355			**Environmental Protection**											
A1280	1	1	01355	Soil Erosion & Sediment Control Plan,R0	CERTIFICATES	FIO	mdl	13 Mar 11	13 Mar 11	13 Mar 11	A	29 Aug 07	FX	01 Jun 07
A1280	6	2	01355 1.2.1	Environmental Protection Plan	PRECON SUBMTL	GA	mdl	13 Mar 11	13 Mar 11	13 Mar 11	A	19 Mar 08	A	28 Aug 07
	2	3	01355	MCSCD SESC Plan Approval	PRODUCT DATA	FIO	mdl				A	29 Oct 07	F	31 Oct 07
	3	4	01355	WAPA Permit	DATA	FIO					A	21 Feb 08	F	19 May 08
	4	5	01355	APC Online Permit	DATA	FIO					A	22 Feb 08	F	29 Feb 08
	5	6	01355	Application for 2nd-level AirRisk Screen	DATA	FIO	mdl				A	19 Mar 08	F	19 May 08
	7	7	01355 1.1	NJDEP NJPDES Permit Equivalency	DATA	FIO					A	18 Nov 10	F	24 Jan 11
	8	8	01355 1.1	BGR Permit Equivalent	DESIGN DATA	FIO					A	10 Nov 10	F	15 Nov 10
	9	9	01355 1.1	Physical Connection Permit Application	RECORDS	FIO					A	12 Nov 10	F	15 Nov 10
	10	10	01355 1.1	BSDW Permit Application	RECORDS	FIO					A	12 Nov 10	F	15 Nov 10
	11	11	01355	Construction Permit - Temp Elec Svc	PRECON SUBMTL	FIO	mdl				A	24 Nov 10	F	02 Dec 10
	12	12	01355	Demolition Permit - Pumphouse	PRECON SUBMTL	FIO	mdl				A	24 Nov 10	F	02 Dec 10
	13	13	01355 2.4.4	MCSCD 72-hr Notification	PRECON SUBMTL	FIO	mdl				A	19 Nov 10	F	31 Jan 11
	17	14	01355 1.2.1	2010 Drilling Permits	PRECON SUBMTL	FIO	mdl				A	10 Dec 10	F	13 Dec 10
	14	15	01355 1.3.1	Road Opening Permit	PRODUCT DATA	FIO	mdl				A	10 Dec 10	F	13 Dec 10
	15	16	01355 1.2.1	Lead and Asbestos Evaluation Report	PRODUCT DATA	FIO	mdl				A	10 Dec 10	F	13 Dec 10
	16	17	01355 1.2.1	Structural Evaluation for Demolition	PRODUCT DATA	FIO	mdl				A	10 Dec 10	F	13 Dec 10
	18	18	01355 1.1	BSDW Permit Admin Complete Letter	PRODUCT DATA	FIO	mdl				A	21 Dec 10	F	29 Dec 10
	19	19	01355 1.1	FHA Individual Permit Equivalent App	PRODUCT DATA	FIO	mdl				A	20 Dec 10	F	29 Dec 10
	20	20	01355 1.1	TWA Permit Equivalency App	PRODUCT DATA	FIO	mdl				A	20 Dec 10	F	29 Dec 10

RANGE : ALL

SORT : SECTION & ITEM

SUBMITTAL REGISTER (ER 415-1-10)

TITLE AND LOCATION: Rockaway Wellfield Superfund Site, EM/WS,Rockaway Borough, East Main/Wall Street, Morris County, NJ

DATE: 05 May 2011

CONTRACTOR: CAPE Environmental Management Inc.

CONTRACT NUMBER: W912DQ-05-D-0001 0005

ACTIVITY No.	TRANS-MITTAL No.	ITEM No.	SPEC PARAGRAPH No.	DESCRIPTION OF SUBMITTAL	TYPE OF SUBMITTAL	CLASSI-FICATION FIO GA, DA or CR	CONTRACTOR REVIEWER	CONTRACTOR SCHEDULE DATES SUBMIT NEEDED BY	APPROVAL NEEDED BY	MATERIAL NEEDED BY	CONTRACTOR ACTION CODE	CORPS RECEIVED DATE	GOVERNMENT ACTION CODE	CORPS RETURNED DATE
	21	21	01355 1.1	Rockaway Construction Permit	PRODUCT DATA	FIO	mdl				A	19 Jan 11	F	24 Jan 11
	22	22	01355 1.1	QTRLY Monitoring Report OCT-DEC 2010	PRODUCT DATA	FIO	mdl				A	19 Jan 11	F	24 Jan 11
	23	23	01355 1.1	Physical Connection Permit	PRODUCT DATA	FIO	mdl				A	03 Mar 11	F	07 Mar 11
	24	24	01355 1.1	NJDEP DSW Permit Equivalency Approval	PRODUCT DATA	FIO	mdl				A	04 Mar 11	F	14 Mar 11
	25	25	01355 1.1	APC Pre-construction Permit Equivalency	PRODUCT DATA	FIO	mdl				A	14 Mar 10	F	17 Mar 11
	26	26	01355 1.1	APC Permit Activity Number	PRODUCT DATA	FIO	mdl				A	14 Mar 11	F	17 Mar 11
	27	27	01355 1.1	APC Permit Equivalency Approval	PRODUCT DATA	FIO	mdl				A	17 Mar 11	F	
A2310	28	28	01355 1.1	FHA Permit - Approved	PRODUCT DATA	FIO	mdl	10 Jul 11	09 Aug 11	09 Aug 11	A			
SECTION - 01380			**Project Photographs**											
	3	1	01380 1.2.1	Pre-Con Photos - Parking Lot	PRODUCT DATA	FIO	mdl				A	29 Aug 07	F	27 Aug 07
	2	2	01380 1.2.1	Project Photographs - Pre-Con	PRODUCT DATA	FIO	mdl				A	14 Aug 07	F	14 Aug 07
	2	3	01380 1.2.1	Project Photos - Progress	PRODUCT DATA	FIO	mdl				A	14 Aug 07	F	14 Aug 07
	4	4	01380 1.3.1	Project Photos-Progress (8/9 - 8/24/07)	PRODUCT DATA	FIO	mdl				A	06 Sep 07	F	12 Sep 07
	5	5	01380	Progress Photos 8/27 - 9/7/07	PRODUCT DATA	FIO	mdl				A	16 Oct 07	F	23 Oct 07
	6	6	01380	Progress Photos 091007 - 092807	PRODUCT DATA	FIO	mdl				A	29 Oct 07	F	31 Oct 07
	7	7	01380	Progress Photos 100107 - 101907	PRODUCT DATA	FIO	mdl				A	29 Oct 07	F	31 Oct 07
	8	8	01380 1.2.1	Pre-Con Photos NOV 2010	PRODUCT DATA	FIO	mdl				A	10 Dec 10	C	16 Dec 10
	9	9	01380 1.2.1	ACM Abatement 23NOV2010	PRODUCT DATA	FIO	mdl				A	10 Dec 10	B	16 Dec 10
	10	10	01380 1.2.1	December 2010 Progress Photos	PRODUCT DATA	FIO	mdl				A	07 Jan 11	F	11 Jan 11
	11	11	01380 1.2.1	January 2011 Progress Photos	PRODUCT DATA	FIO	mdl				A	07 Feb 11	F	25 Feb 11
	12	12	01380 1.2.1	February 2011 Progress Photos	PRODUCT DATA	FIO	mdl				A	08 Mar 11	F	12 Mar 11
	13	13	01380 1.2.1	March 2011 Progress Photos	PRODUCT DATA	FIO	mdl				A	11 Apr 11	B	19 Apr 11
SECTION - 01381			**Video Taping**											
	1	1	01381 1.3.1	Pre-Construction Video	PRODUCT DATA	FIO	mdl				A	29 Aug 07	G	02 Feb 11
	2	2	01381 1.3.1	Pre-Construction Video - EW-7	PRODUCT DATA	FIO	mdl				A	29 Aug 07	F	27 Sep 07
		3	01381 1.2.1	Pre-Construction, Progress and Post-Cons	PRODUCT DATA	FIO								
SECTION - 01450			**Chemical Data Quality Control**											
0001	1	1	01450 1.3.1	Sampling and Analysis Plan - DRAFT	PRECON SUBMTL	GA	mdl	22 Nov 10	22 Nov 10	22 Nov 10	A	20 Aug 07	G	02 Feb 11
0001	2	2	01450 1.3.1	Responses to Comments - DRAFT SAP	PRECON SUBMTL	GA	mdl	22 Nov 10	22 Nov 10	22 Nov 10	A	20 Aug 07	F	22 Feb 08
0001	3	3	01450 1.3.1	Response to Comments for RAWP,R0	PRECON SUBMTL	GA	mdl	22 Nov 10	22 Nov 10	22 Nov 10	A	20 Aug 07	B	03 Jun 07
	27	7	01450 1.3.3	QC Labs Certifications	CERTIFICATES	FIO	mdl				A	07 Jan 11	F	07 Feb 11
	28	8	01450 1.3.3	GW-1 Bacteria Results 11FEB2011	TEST REPORTS	FIO	mdl				A	20 Feb 11	F	24 Feb 11
A3180		10	01450	Sampling Trip Reports		FIO		05 Apr 11	05 Apr 11	05 Apr 11				
A3180		11	01450	ANSETS Documentation		FIO		05 Apr 11	05 Apr 11	05 Apr 11				
	4	12	01450 1.3.4	Chemical Data Package - GW Data	TEST REPORTS	FIO	mdl				A	20 Aug 07	F	21 Aug 07

RANGE : ALL

SORT : SECTION & ITEM

SUBMITTAL REGISTER (ER 415-1-10)

TITLE AND LOCATION Rockaway Wellfield Superfund Site, EM/WS,Rockaway Borough, East Main/Wall Street, Morris County, NJ

DATE 05 May 2011

CONTRACTOR CAPE Environmental Management Inc.

CONTRACT NUMBER W912DQ-05-D-0001 0005

ACTIVITY No.	TRANS-MITTAL No.	ITEM No.	SPEC PARAGRAPH No.	DESCRIPTION OF SUBMITTAL	TYPE OF SUBMITTAL	CLASSI-FICATION FIO GA, DA or CR	CONTRACTOR REVIEWER	CONTRACTOR SCHEDULE DATES SUBMIT NEEDED BY	APPROVAL NEEDED BY	MATERIAL NEEDED BY	CONTRACTOR ACTION CODE	CORPS RECEIVED DATE	GOVERNMENT ACTION CODE	CORPS RETURNED DATE
	5	13	01450 1.3.4	Chemical Data Package - SB waste	TEST REPORTS	FIO	mdl				A	13 Aug 07	F	13 Aug 07
	6	14	01450	Work Plan Addendum-Aquifer Testing	PRECON SUBMTL	GA					A	23 Aug 07	G	02 Feb 11
	7	15	01450	Chemical Data Package - GW Data	TEST REPORTS	FIO	mdl				A	23 Aug 07	F	23 Aug 07
	8	16	01450	GW Data Summary Report	TEST REPORTS	FIO	mdl				A	29 Aug 07	F	30 Aug 07
	10	17	01450	Field Sampling Plan Addendum #2	PRECON SUBMTL	GA					A	12 Oct 07	G	02 Feb 11
	11	18	01450	QAPP Addendum	PRECON SUBMTL	GA					A	29 Oct 07	F	29 Apr 08
A0780	12	19	01450	Spent Carbon TCLP Analytical Results	REPORTS	FIO	mdl				A	27 Feb 08	F	29 Feb 08
	13	20	01450	Spent Carbon Disposal Documents		FIO	mdl				A	04 Feb 08	F	04 Feb 08
	14	21	01450	EW Sampling DSR-FEB2008	DATA	FIO	mdl				A	21 Feb 08	F	19 May 08
	15	22	01450	Field Sampling Plan Addendum #3	PRECON SUBMTL	GA	mdl				A	17 Mar 08	F	19 May 08
	16	23	01450	ANSETS-Chronic Tox-10/26/07	PRODUCT DATA	FIO	mdl				A	16 May 08	F	16 May 08
	17	24	01450	ANSETS-Geotech-10/30/07	PRODUCT DATA	FIO	mdl				A	16 May 08	F	16 May 08
	18	25	01450	ANSETS-SB Waste-7/12/07	PRODUCT DATA	FIO	mdl				A	16 May 08	F	16 May 08
	19	26	01450	ANSETS-PumpTestH20-7/17/07	PRODUCT DATA	FIO	mdl				A	16 May 08	F	16 May 08
	20	27	01450	ANSETS-TrenchChara-9/26/07	PRODUCT DATA	FIO	mdl				A	16 May 08	F	16 May 08
	21	28	01450	ANSETS-PurgeH20-10/5/07	PRODUCT DATA	FIO	mdl				A	16 May 08	F	16 May 08
	22	29	01450	ANSETS-PurgeH20-10/30/07	PRODUCT DATA	FIO	mdl				A	16 May 08	F	16 May 08
	23	30	01450	ANSETS-TrenchSpoils-10/18/07	PRODUCT DATA	FIO	mdl				A	16 May 08	F	02 May 08
	24.1	31	01450 1.5	Soil Boring (CDM-2)- Chemical Lab Report	PRODUCT DATA	FIO					A	17 Nov 10	B	22 Nov 10
	25	32	01450 1.5	ANSETS - CDM-2 Soil Boring	PRODUCT DATA	FIO					A	27 Sep 10	F	28 Sep 10
	26	33	01450 1.3.4	TrenchSpoils DER 24NOV2010	TEST REPORTS	FIO	mdl				A	24 Nov 10	F	16 Dec 10
A3180		34	01450 1.3.1	Sampling and Analysis Plan	PRECON SUBMTL	GA		05 Apr 11	05 Apr 11	05 Apr 11				
		35	01450 1.3.2	ANSETS Documentation	PRODUCT DATA	FIO								
	29	36	01450 1.3.3	GW-1 CDD Waste Characterization	TEST REPORTS	FIO	mdl				A	24 Feb 11	F	07 Mar 11
A3180	30	37	01450 1.3.2	Well Inventory for Baseline Event	PRODUCT DATA	GA	mdl	09 Mar 11	08 Apr 11	08 Apr 11	A	29 Mar 11	F	18 Apr 11
SECTION - 01451			**Contractor Quality Control**											
0001	1	1	01451	Delegation of Authority - CQCSM	QUALIFICATIONS	GA	mdl	22 Nov 10	22 Nov 10	22 Nov 10	A	20 Aug 07	G	02 Feb 11
0001	2	2	01451 1.3.2	CQC Organization Chart REV 0	PRODUCT DATA	GA	mdl	22 Nov 10	22 Nov 10	22 Nov 10	A	20 Aug 07	E	07 May 07
0001	3	3	01451 1.3.1	CQC Plan - DRAFT	PRECON SUBMTL	GA	mdl	22 Nov 10	22 Nov 10	22 Nov 10	A	20 Aug 07	E	07 May 07
0001	4	4	01451	DRAFT CQCP - Response to Comments	PRECON SUBMTL	GA	mdl	22 Nov 10	22 Nov 10	22 Nov 10	A	20 Aug 07	C	15 May 07
0001	5	5	01451 1.3.1	Contractor Quality Control Plan, Rev 1	PRECON SUBMTL	GA	mdl	22 Nov 10	22 Nov 10	22 Nov 10	A	11 May 07	D	23 May 07
	6	10	01451	CQCSM Delegation of Authority-070725	QUALIFICATIONS	GA	mdl				A	20 Aug 07	G	02 Feb 11
	7	11	01451	CQCSM Delegation of Authority-070807	QUALIFICATIONS	GA	mdl				A	13 Aug 07	B	13 Aug 07
	8	12	01451	CQC Plan, Revision 2	PRODUCT DATA	GA	mdl				A	05 Sep 07	A	05 Sep 07
	8.2	12.1	01451 1.3.1	CQC Plan, Revision 4	PRECON SUBMTL	GA	mdl				A	11 Apr 11	C	28 Apr 11

RANGE : ALL

SORT : SECTION & ITEM

SUBMITTAL REGISTER (ER 415-1-10)

TITLE AND LOCATION: Rockaway Wellfield Superfund Site, EM/WS,Rockaway Borough, East Main/Wall Street, Morris County, NJ

DATE: 05 May 2011

CONTRACTOR: CAPE Environmental Management Inc.

CONTRACT NUMBER: W912DQ-05-D-0001 0005

ACTIVITY No.	TRANS-MITTAL No.	ITEM No.	SPEC PARAGRAPH No.	DESCRIPTION OF SUBMITTAL	TYPE OF SUBMITTAL	CLASSI-FICATION FIO GA, DA or CR	CONTRACTOR REVIEWER	CONTRACTOR SCHEDULE DATES: SUBMIT NEEDED BY	APPROVAL NEEDED BY	MATERIAL NEEDED BY	CONTRACTOR ACTION: CODE	CORPS RECEIVED DATE	GOVERNMENT ACTION: CODE	CORPS RETURNED DATE
	9	13	01451	WORK PLAN - GTS Construction	PRECON SUBMTL	GA	mdl				A	29 Oct 07	E	15 Nov 07
	10	14	01451	CDM Groundwater Pumping Test Report	REPORTS	GA	mdl				A	04 Feb 08	E	19 May 08
	11	15	01451	Work Plan - GTS Constr. RTCs	PRECON SUBMTL	GA	mdl				A	17 Mar 08	G	02 Feb 11
	12	16	01451	CQCSM Delegation of Authority-20MAR08	QUALIFICATIONS	GA	mdl				A	19 Mar 08	F	19 May 08
	13	17	01451	Alt CQCSM Delegation of Authority10MAR08	QUALIFICATIONS	GA	mdl				A	19 Mar 08	F	19 May 08
	14	18	01451	Work Plan GTS Construction REV 1	PRECON SUBMTL	GA	mdl				A	19 Mar 08	F	16 Aug 10
	14.2	18.1	01451 1.3.1	Work Plan GTS Construction REV 2	PRECON SUBMTL	GA	mdl				A	11 Apr 11	A	21 Apr 11
	15	19	01451	90% GTS Design - Process/Electrical	DESIGN DATA	GA	mdl				A	13 Jun 08	G	02 Feb 11
	16	20	01451 1.1	90% GWTS/Pump House Specs & Drawings	PRECON SUBMTL	FIO	mdl				A	16 Sep 10	C	15 Oct 10
	16.1	20.1	01451 1.1	100% GWTS / Pump House Specs and Draw	PRECON SUBMTL	FIO	mdl				A	29 Nov 11	F	31 Jan 11
	17.1	21	01451	CQCSM DoA - Landle 17NOV2010	PRECON SUBMTL	GA	mdl				A	18 Apr 11	B	21 Apr 11
	18	22	01451	Alt CQCSM DoA - Morrison 17NOV2010	PRECON SUBMTL	GA	mdl				A	24 Nov 10	B	16 Dec 10
	18.2	22.1	01451 1.2.3	Alt CQCSM DoA - Morrison 17NOV2010	PRODUCT DATA	GA	mdl				A	29 Apr 11	B	29 Apr 11
	19	23	01451	100% GWTS/Pump House Design Package	PRECON SUBMTL	GA	mdl				A	17 Jan 11		19 Jan 11
		24	01451 1.1	Work Management Plan, Revision 1	PRODUCT DATA	GA	mdl							
		25	01451 1.1	CQC Plan, Revision 3	PRODUCT DATA	GA	mdl							
		26	01451 1.3.1	CQC Plan	PRECON SUBMTL	GA								
		27	01451 1.3.2	CQC Organizational Changes	PRODUCT DATA	GA								
		28	01451 1.3.3	CQC Report	PRODUCT DATA	FIO								
	19	29	01451 1.2.3	CQCSM DoA - Altamirano	PRODUCT DATA	GA	mdl				A	17 Jan 11	B	19 Jan 11
	20	30	01451 1.2.3	2nd Alt CQCSM DoA - Caudill 20APR2011	PRODUCT DATA	GA	mdl				A	20 Apr 11	B	28 Apr 11
SECTION - 01500			**Temporary Construction Facilities&Utilities**											
0001		1	01500 1.2.1	Site Layout (Laydown Yard) Drawing	SHOP DRAWINGS	GA	mdl	07 Dec 10	07 Dec 10	22 Dec 10				
0001		2	01500 1.2.1	Site Layout (Laydown Yard) REV 1	SHOP DRAWINGS	GA	mdl	22 Nov 10	22 Nov 10	22 Nov 10				
	3	3	01500	Site Layout (Laydown Area) REV 2	SHOP DRAWINGS	GA	mdl				A	06 Jun 07	B	12 Jun 07
	4	4	01500	Site Layout DWG - EW-5	SHOP DRAWINGS	FIO	mdl				A	29 Aug 07	F	27 Aug 07
		5	01500 1.7 A	Project Signs Example		GA								
	4	6	01500	Site Layout DWG - EW-6	SHOP DRAWINGS	FIO	mdl				A	29 Aug 07	F	27 Aug 07
	4	7	01500	Site Layout DWG - EW-7	SHOP DRAWINGS	FIO	mdl				A	29 Aug 07	F	27 Aug 07
	5	8	01500	EW-7A Location	PRODUCT DATA	FIO	mdl				A	27 Sep 07	G	02 Feb 11
SECTION - 01510			**Temporary Site Utilities**											
		1	01510 1.2.1	Site Layout	SHOP DRAWINGS	GA								
SECTION - 01550			**Surveying**											
A2800		1	01550 1.4 A3	5-day Surveying Notification		FIO		17 Dec 10	17 Dec 10	17 Dec 10				
A2800		2	01550 §01550, 1.2	Surveyor Qualifications		FIO		17 Dec 10	17 Dec 10	17 Dec 10				

RANGE : ALL

SORT : SECTION & ITEM

SUBMITTAL REGISTER (ER 415-1-10)

TITLE AND LOCATION: Rockaway Wellfield Superfund Site, EM/WS,Rockaway Borough, East Main/Wall Street, Morris County, NJ

DATE: 05 May 2011

CONTRACTOR: CAPE Environmental Management Inc.

CONTRACT NUMBER: W912DQ-05-D-0001 0005

ACTIVITY No.	TRANS-MITTAL No.	ITEM No.	SPEC PARAGRAPH No.	DESCRIPTION OF SUBMITTAL	TYPE OF SUBMITTAL	CLASSI-FICATION FIO GA, DA or CR	CONTRACTOR REVIEWER	CONTRACTOR SCHEDULE DATES: SUBMIT NEEDED BY	APPROVAL NEEDED BY	MATERIAL NEEDED BY	CONTRACTOR ACTION: CODE	CORPS RECEIVED DATE	GOVERNMENT ACTION: CODE	CORPS RETURNED DATE
A2870		3	01550 1.2.2	Survey Accuracy Documentation		FIO		22 Oct 10	22 Oct 10	22 Oct 10				
A2870		4	01550 1.2.3	Surveyor Field Notes		FIO		22 Oct 10	22 Oct 10	22 Oct 10				
	2	5	01550	GTS Building Site Survey	SHOP DRAWINGS	FIO	mdl				A	19 Sep 07	F	19 Sep 07
		6	01550 1.2.1	Surveyor Qualifications	PRODUCT DATA	FIO								
		7	01550 1.2.2	Survey Accuracy Documentation	PRODUCT DATA	FIO								
		8	01550 1.2.3	Surveyor Field Notes	PRODUCT DATA	FIO								
A2540		9	01550 1.2.4	Extraction Well Certification-Form B	CERTIFICATES	FIO		06 Apr 11	06 Apr 11	06 Apr 11				
A2310		10	01550 1.2.5	As-Built Drawings	CLOSEOUT SUBMTL	GA		09 Aug 11	09 Aug 11	09 Aug 11				
SECTION - 01580			**Signs**											
A2810		1	01580 1.2.1	Site Layout Drawing - GTS location	PRODUCT DATA	GA	mdl	15 Jul 11	15 Jul 11	15 Jul 11				
SECTION - 01730			**Operation and Maintenance Support Information**											
		1	01730 1.02.C	Manufacturer Certificates for Each Piece	CERTIFICATES	FIO								
A2300		2	01730 1.03	O & M Instructions for All Equipmt Furni	MFRS INSTR	FIO		09 Aug 11	09 Aug 11	09 Aug 11				
SECTION - 01735			**Project Closeout**											
A2300		1	01735 1.15	Warranty Documents		FIO		09 Aug 11	09 Aug 11	09 Aug 11				
A2300		2	01735 1.2.4	As-Built Drawings		GA		09 Aug 11	09 Aug 11	09 Aug 11				
A2300		3	01735 3.2.4	Interim Remedial Action Report		GA		09 Aug 11	09 Aug 11	09 Aug 11				
SECTION - 01740			**Warranties and Bonds**											
A2300		1	01740 1.03	Written Warranties	CERTIFICATES	FIO		09 Aug 11	09 Aug 11	09 Aug 11				
SECTION - 01800														
		9	01800 1.2.3	Weekly Operating Logs		FIO								
SECTION - 02100			**Site Preparation**											
A0940	1	1	02100 1.2.1	Road Opening Permit	CERTIFICATES	FIO	mdl				A	16 Aug 07	F	21 Aug 07
		2	02100 1.2.1	Road Opening Permit	CERTIFICATES	FIO								
SECTION - 02120			**Transportation & Disposal**											
	7	1	02120 1.3.3	MCR for Pure Soil Technologies	PRODUCT DATA	FIO	mdl				A	28 Feb 11	F	28 Feb 11
A2450	3	2	02120 1.3.1	Transportation Plan	PRECON SUBMTL	GA	mdl	08 Jul 11	08 Jul 11	08 Jul 11	A	19 Mar 08	G	16 Aug 10
	8	3	02120 1.3.2	Abatetech ACM Final Report	PRODUCT DATA	FIO	mdl				A	18 Apr 11	A	18 Apr 11
A2960	6	4	02120 1.3.3	Pilot Boring Soil Disposal-BillofLading	PRODUCT DATA	FIO	mdl	23 Oct 10	23 Oct 10	23 Oct 10	A	20 Feb 11	F	22 Feb 11
A0940	1	5	02120 1.4.1	Off-site Rule - Allstate Power Vac	PRODUCT DATA	FIO	mdl				A	23 Aug 07	F	23 Aug 07
	1	6	02120 1.4.1	Off-site Rule - Siemens Carbon	PRODUCT DATA	FIO	mdl				A	23 Aug 07	F	23 Aug 07
	1	7	02120 1.4.1	Off-site Rule - Tullytown	PRODUCT DATA	FIO	mdl				A	23 Aug 07	F	23 Aug 07
	1	8	02120 1.4.1	Off-site Rule - Envirotrol, Inc	PRODUCT DATA	FIO	mdl				A	23 Aug 07	F	23 Aug 07
	1	9	02120 1.4.1	Off-site Rule - GROWS Landfille	PRODUCT DATA	FIO	mdl				A	23 Aug 07	F	23 Aug 07
	2	10	02120	Non Hazardous Waste Manifest Tickets	CERTIFICATES	FIO	mdl				A	27 Feb 08	F	29 Feb 08

RANGE : ALL

SORT : SECTION & ITEM

SUBMITTAL REGISTER (ER 415-1-10)

TITLE AND LOCATION: Rockaway Wellfield Superfund Site, EM/WS,Rockaway Borough, East Main/Wall Street, Morris County, NJ

DATE: 05 May 2011

CONTRACTOR: CAPE Environmental Management Inc.

CONTRACT NUMBER: W912DQ-05-D-0001 0005

ACTIVITY No.	TRANS-MITTAL No.	ITEM No.	SPEC PARAGRAPH No.	DESCRIPTION OF SUBMITTAL	TYPE OF SUBMITTAL	CLASSI-FICATION FIO GA, DA or CR	CONTRACTOR REVIEWER	CONTRACTOR SCHEDULE DATES: SUBMIT NEEDED BY	APPROVAL NEEDED BY	MATERIAL NEEDED BY	CONTRACTOR ACTION: CODE	CORPS RECEIVED DATE	GOVERNMENT ACTION: CODE	CORPS RETURNED DATE
	4	11	02120	Waste Management Plan	PRECON SUBMTL	GA	mdl				A	19 Mar 08	G	16 Aug 10
	5	12	02120 1.4.1	Cycle Chem Off Site Rule	PRODUCT DATA	FIO					A	27 Sep 10	F	28 Sep 10
A2310	9	13	02120 1.3.2	Cycle Chem OSR Carbon Disposal	PRODUCT DATA	FIO	mdl	10 Jul 11	09 Aug 11	09 Aug 11	A	07 Apr 11	F	08 Apr 11
A2310	10	14	02120 1.3.2	GROWS Landfill OSR (Carbon)	PRODUCT DATA	FIO	mdl	10 Jul 11	09 Aug 11	09 Aug 11	A	07 Apr 11	F	18 Apr 11
A2310		15	02120 1.3.4	Annual and Biennial Reports	TEST REPORTS	FIO		10 Jul 11	09 Aug 11	09 Aug 11				
A2310		16	02120 1.3.5	Exception Reports	TEST REPORTS	FIO		10 Jul 11	09 Aug 11	09 Aug 11				
A2310		17	02120 1.3.6	Shipping Documents and Packaging Certifi	CERTIFICATES	FIO		10 Jul 11	09 Aug 11	09 Aug 11				
A2310		18	02120 1.3.7	Certificates of Disposal	CERTIFICATES	FIO		10 Jul 11	09 Aug 11	09 Aug 11				
A2310		19	02120 1.3.8	Disposal Facility Names and Permits	PRECON SUBMTL	FIO		10 Jul 11	09 Aug 11	09 Aug 11				
SECTION - 02210			**Excavation, Trenching, Backfilling, Compactio**											
A2020	3	1	02210 1.3.3	Clean Fill Certfications	CERTIFICATES	FIO	mdl	03 Dec 10	03 Dec 10	03 Dec 10	A	15 Nov 07	G	02 Feb 11
	1	7	02210	90% Design Package - Trenching	DESIGN DATA	FIO	mdl				A	27 Sep 07	D	03 Oct 07
	2	8	02210	GTS Geotechnical Memo	PRODUCT DATA	FIO	mdl				A	27 Sep 07	G	02 Feb 11
A3450	4	9	02210	Waiver - Working near Power Lines	PRODUCT DATA	FIO	mdl	14 Jan 11	14 Jan 11	14 Jan 11	A	15 Nov 07	G	16 Aug 10
	5	10	02210	Town Engineer Comments on Trench PKG	PRODUCT DATA	FIO	mdl				A	12 Dec 07	FX	07 Jan 08
	6	11	02210	100% Trench Design	PRECON SUBMTL	GA	mdl				A	17 Mar 08	F	19 May 08
	10.1	11.1	02210 1.1	REV 1 Trench Design	PRECON SUBMTL	FIO	mdl				A	07 Dec 10	F	19 Jan 11
	7	12	02210	Road Opening Permit - Trenching	PRODUCT DATA	FIO					A	10 Apr 08	G	02 Feb 11
	8	13	02210 1.5	Geotechnical Memorandum	DESIGN DATA	FIO					A	27 Sep 10	F	15 Oct 10
	9	14	02210 1.1	Road Opening Permit Application (03NOV10	RECORDS	FIO					A	10 Nov 10	F	15 Nov 10
SECTION - 02270			**Erosion Sediment Control**											
A2170		1	02270 Detail I	Erosion control blanket - list of mater	PRODUCT DATA	DA		18 Nov 10	18 Nov 10	18 Nov 10				
A2170		2	02270 Detail I	Erosion control blanket - shop drawings	SHOP DRAWINGS	DA		18 Nov 10	18 Nov 10	18 Nov 10				
A2170		3	02270 Detail I	Erosion control blanket - certificatio	CERTIFICATES	FIO		18 Nov 10	18 Nov 10	18 Nov 10				
SECTION - 02272			**Geotextile**											
A2130		1	02272 Detail C	Geotextile Fabric - list of material pr	PRODUCT DATA	DA		08 Apr 11	08 Apr 11	08 Apr 11				
		2	02272 Detail C	Geotextile Fabric - shop drawings inclu	SHOP DRAWINGS	DA								
A2310		3	02272 Detail C	Geotextile Fabric - test reports	TEST REPORTS	FIO		09 Aug 11	09 Aug 11	09 Aug 11				
A2310		4	02272 Detail C	Geotextile Fabric - certifications	CERTIFICATES	FIO		09 Aug 11	09 Aug 11	09 Aug 11				
A2130		5	02272 Detail C	Geotextile Fabric - repair protocol	MFRS INSTR	DA		08 Apr 11	08 Apr 11	08 Apr 11				
SECTION - 02300			**Earthwork**											
A2120		1	02300 1.01.F	Proposed Method of Filling/Backfilling &	PRECON SUBMTL	DA		14 Apr 11	14 Apr 11	14 Apr 11				
	2.1	2	02300 1.02.A	Structural and Common Fill Tech Memo	PRODUCT DATA	FIO	mdl				A	19 Jan 11	F	24 Jan 11
	2.2	3	02300 1.02.B	Structural & Common Fill Sample Results	TEST REPORTS	FIO	mdl				A	17 Mar 11	F	
	1.1	4	02300 1.02.C	DGA and 3/4 inch stone	CERTIFICATES	FIO	mdl				A	28 Mar 11	F	18 Apr 11

RANGE : ALL

SORT : SECTION & ITEM

SUBMITTAL REGISTER (ER 415-1-10)

TITLE AND LOCATION: Rockaway Wellfield Superfund Site, EM/WS,Rockaway Borough, East Main/Wall Street, Morris County, NJ

DATE: 05 May 2011

CONTRACTOR: CAPE Environmental Management Inc.

CONTRACT NUMBER: W912DQ-05-D-0001 0005

ACTIVITY No.	TRANS-MITTAL No.	ITEM No.	SPEC PARAGRAPH No.	DESCRIPTION OF SUBMITTAL	TYPE OF SUBMITTAL	CLASSI-FICATION FIO GA, DA or CR	CONTRACTOR REVIEWER	CONTRACTOR SCHEDULE DATES: SUBMIT NEEDED BY	APPROVAL NEEDED BY	MATERIAL NEEDED BY	CONTRACTOR ACTION: CODE	CORPS RECEIVED DATE	GOVERNMENT ACTION: CODE	CORPS RETURNED DATE
A2410	5	5	02300 1.02.D	2011 Utility Clearance - Trenching	PRECON SUBMTL	FIO	mdl	28 Mar 11	28 Mar 11	28 Mar 11	A	31 Mar 11	F	01 Apr 11
A2120		6	02300 1.02.E	Excavation Support Designs	DESIGN DATA	DA		14 Apr 11	14 Apr 11	14 Apr 11				
A2120		7	02300 1.02.E	Shop Drawings for Excavation Support Sys	SHOP DRAWINGS	DA		14 Apr 11	14 Apr 11	14 Apr 11				
A2120		8	02300 1.02.F	Dewatering and Drainage System Designs	DESIGN DATA	DA		14 Apr 11	14 Apr 11	14 Apr 11				
		9	02300 1.04	Representative Fill Sample	SAMPLES	FIO								
	3	10	02300 1.02A	Washed Sand Tech Memo	PRODUCT DATA	FIO	mdl				A	22 Feb 11	F	28 Feb 11
	4	11	02300 1.3A, 2.6	Geotextile - Carthage Mills FX100HS	PRODUCT DATA	FIO	mdl				A	22 Mar 11	F	01 Apr 11
	6	12	02300 1.02.D	Miss Mark Tickets 2011	PRODUCT DATA	FIO	mdl				A			
SECTION - 02316			**Excavation, Trenching & Backfill-Utility**											
	1	1	02316 1.4 B	Materials Source Tech Memo-19MAY2008	CERTIFICATES	GA	mdl				A	13 Jun 08	G	02 Feb 11
SECTION - 02370														
A2170		1	02370 1.3.1	Soil Erosion and Sediment Control Plan		GA		18 Nov 10	18 Nov 10	18 Nov 10				
SECTION - 02550			**Asphaltic Paving**											
A2120	1	1	02550 1.03.A	Ashpalt Mix Design - Paverite	DESIGN DATA	FIO	mdl	14 Apr 11	14 Apr 11	14 Apr 11	A	22 Mar 11	F	01 Apr 11
		2	02550 1.03.B	Aggregate Samples	SAMPLES	DA								
A2310		3	02550 1.03.C	Field Test Results	TEST REPORTS	FIO		09 Aug 11	09 Aug 11	09 Aug 11				
SECTION - 02605			**Precast Concrete Structures**											
	2	1	02605 1.3.1	EW Vault Shop Drawings	SHOP DRAWINGS	GA	mdl				A	29 Aug 07	FX	28 Feb 07
	3	5	02605	EW Vault Shop Drawings	SHOP DRAWINGS	GA	mdl				A	05 Sep 07	F	05 Sep 07
SECTION - 02616			**Ductile Iron Pipe and Fittings**											
	1	1	02616 1.02.A	Shop Drawings	SHOP DRAWINGS	FIO	mdl				A	01 Feb 11	F	04 Feb 11
	1	2	02616 1.02.A	Product Data	PRODUCT DATA	FIO	mdl				A	01 Feb 11	F	04 Feb 11
A3340		3	02616 1.02.B	Supplier and Material List	PRODUCT DATA	FIO		29 Jun 11	29 Jun 11	29 Jun 11				
A3340		4	02616 1.02.C, D	Shop Test Reports	TEST REPORTS	FIO		29 Jun 11	29 Jun 11	29 Jun 11				
A3340		5	02616 1.02.C, F	Affidavit of Compliance	CERTIFICATES	FIO		29 Jun 11	29 Jun 11	29 Jun 11				
A3340		6	02616 1.02.E	Production and Delivery Schedule	PRECON SUBMTL	FIO		29 Jun 11	29 Jun 11	29 Jun 11				
A3340		7	02616 1.02.G	Handling Procedures	MFRS INSTR	FIO		29 Jun 11	29 Jun 11	29 Jun 11				
A3340		8	02616 3.04.B	Test Procedures and Method	PRECON SUBMTL	DA		29 Jun 11	29 Jun 11	29 Jun 11				
SECTION - 02622			**Plastic Pipe**											
	1	1	02622 1.02.A	Manufacturer and Material List	PRODUCT DATA	FIO	mdl				A	07 Jan 11	F	11 Jan 11
	1	2	02622 1.02.B	Pipe Layout and Schedule Shop Drawings	SHOP DRAWINGS	FIO	mdl				A	07 Jan 11	F	11 Jan 11
	1	3	02622 1.02.C	Certified ASTM Test Reports	TEST REPORTS	FIO	mdl				A	07 Jan 11	F	11 Jan 11
A1700	3	4	02622 1.02.D	Certification for HDPE butt-fusion perso	CERTIFICATES	FIO	mdl	30 Jun 11	30 Jun 11	30 Jun 11	A	20 Feb 11	F	22 Feb 11
A2310		5	02622 3.04.B	Deflection Testing Results	TEST REPORTS	FIO		09 Aug 11	09 Aug 11	09 Aug 11				
A2670	2	6	02622 1.03B	PVC Drain Shop Drawings	SHOP DRAWINGS	FIO	mdl	12 Feb 11	14 Mar 11	14 Mar 11	A	14 Feb 11	F	16 Feb 11

RANGE : ALL

SORT : SECTION & ITEM

SUBMITTAL REGISTER (ER 415-1-10)

TITLE AND LOCATION: Rockaway Wellfield Superfund Site, EM/WS,Rockaway Borough, East Main/Wall Street, Morris County, NJ

DATE: 05 May 2011

CONTRACTOR: CAPE Environmental Management Inc.

CONTRACT NUMBER: W912DQ-05-D-0001 0005

ACTIVITY No.	TRANS-MITTAL No.	ITEM No.	SPEC PARAGRAPH No.	DESCRIPTION OF SUBMITTAL	TYPE OF SUBMITTAL	CLASSI-FICATION FIO GA, DA or CR	CONTRACTOR REVIEWER	CONTRACTOR SCHEDULE DATES: SUBMIT NEEDED BY	APPROVAL NEEDED BY	MATERIAL NEEDED BY	CONTRACTOR ACTION: CODE	CORPS RECEIVED DATE	GOVERNMENT ACTION: CODE	CORPS RETURNED DATE
A2670	2	7	02622 1.03A	Floor Drain/Connection Info	PRODUCT DATA	FIO	mdl	12 Feb 11	14 Mar 11	14 Mar 11	A	14 Feb 11	F	16 Feb 11
		8	02622 1.03A	Forcemain Cleanouts	SHOP DRAWINGS	FIO	mdl							
		9	02622 1.03A	Elbows - Dual Containment	SHOP DRAWINGS	FIO	mdl							
		10	02622 1.03A	Forcemain Wyes	SHOP DRAWINGS	FIO	mdl							
		11	02622 1.02.B	Vault Piping Drawings	SHOP DRAWINGS	FIO	mdl							
		12	02622 1.03	Fabricated Fitting Pressure Verification	DESIGN DATA	FIO	mdl							
SECTION - 02640			**Buried Valves**											
		1	02640 1.03.A	Manufacturer's Product Info	PRODUCT DATA	DA								
		2	02640 1.03.B	Test Reports	TEST REPORTS	FIO								
		3	02640 1.03.C	O & M Manuals		FIO								
		4	02640 1.03.D	Certificates of Compliance	CERTIFICATES	FIO								
A1690	1	5	02640 Detail R	Water Main Connection - curb valve, valv	SHOP DRAWINGS	FIO	mdl	28 Jun 11	28 Jun 11	28 Jun 11	A	14 Feb 11	F	22 Feb 11
A1690	1	6	02640 Detail R	Water Main Connection - curb valve, valv	PRODUCT DATA	FIO	mdl	28 Jun 11	28 Jun 11	28 Jun 11	A	14 Feb 11	F	22 Feb 11
A2310		7	02640 Detail R	Water Main Connection - curb valve, valv	TEST REPORTS	FIO		09 Aug 11	09 Aug 11	09 Aug 11				
A2310		8	02640 Detail R	Water Main Connection - curb valve, valv	CERTIFICATES	FIO		09 Aug 11	09 Aug 11	09 Aug 11				
A2310		9	02640 Detail R	Water Main Connection - curb valve, valv	MFRS INSTR	FIO		09 Aug 11	09 Aug 11	09 Aug 11				
A2000		10	02640 Detail R	Water Main Connection - satisfactory ins	CERTIFICATES	FIO		13 Dec 10	13 Dec 10	13 Dec 10				
SECTION - 02670			**Groundwater Extraction and Monitoring Wells**											
	1	1	02670 1.3.15	Monitoring Well Permits - EW-5, 6, & 7	CERTIFICATES	FIO	mdl				A	20 Aug 07	G	02 Feb 11
	1	2	02670 1.3.15	Driller's License (B&B Drilling)	CERTIFICATES	FIO	mdl				A	20 Aug 07	G	02 Feb 11
	1	3	02670 1.3.13	Qualifications - Geologists	CERTIFICATES	FIO	mdl				A	20 Aug 07	G	02 Feb 11
0001	2	4	02670 1.3.15	EW Installation - Once Call Tickets	CERTIFICATES	FIO	mdl	22 Nov 10	22 Nov 10	22 Nov 10	A	15 May 07	F	16 May 07
0001	3	5	02670 1.3.15	Short Term Water Use PermitbyRule, Rev 0	CERTIFICATES	FIO	mdl	22 Nov 10	22 Nov 10	22 Nov 10	A	11 Jun 07	F	20 Jun 07
0001	4	6	02670 1.3.15	EW-6 Road Opening Permit	CERTIFICATES	FIO	mdl	22 Nov 10	22 Nov 10	22 Nov 10	A	20 Aug 07	F	09 Jul 07
0001	5	7	02670 1.3.9	Grain Size Analysis - EW-6	TEST REPORTS	FIO	mdl	22 Nov 10	22 Nov 10	22 Nov 10	A	20 Aug 07	G	02 Feb 11
	6	8	02670 1.3.2	EW-7 Boring Log	PRODUCT DATA	GA	mdl				A	26 Jul 07	FX	26 Jul 07
	7	9	02670 1.3.8	EW-7 Catalog Data (Well Gravel)	PRODUCT DATA	FIO	mdl				A	27 Jul 07	FX	27 Jul 07
	7	10	02670 1.3.9	EW-7 Grain Size Analysis	TEST REPORTS	FIO	mdl				A	27 Jul 07	FX	27 Jul 07
	8	11	02670 1.3.2	EW-6 Boring Log	PRODUCT DATA	GA	mdl				A	02 Jul 07	FX	26 Jul 07
	9	12	02670 1.3.8	EW-6 Catalog Data (Well Gravel)	PRODUCT DATA	FIO	mdl				A	02 Jul 07	FX	26 Jul 07
	9	13	02670 1.3.9	EW-6 Grain Size Analysis	TEST REPORTS	FIO	mdl				A	02 Jul 07	FX	26 Jul 07
	8	14	02670 1.3.2	EW-5 Boring Log	PRODUCT DATA	GA	mdl				A	02 Jul 07	FX	26 Jul 07
	9	16	02670 1.3.9	EW-5 Grain Size Analysis	TEST REPORTS	FIO	mdl				A	02 Jul 07	FX	26 Jul 07
	10	17	02670 1.3.15	EW Installation - One Call Tickets-R1	CERTIFICATES	FIO	mdl				A	20 Jul 07	F	20 Jul 07
	11	18	02670	Wellscreen Design for EW-7	DESIGN DATA	GA	mdl				A	20 Aug 07	B	20 Aug 07

RANGE : ALL

SORT : SECTION & ITEM

SUBMITTAL REGISTER (ER 415-1-10)

TITLE AND LOCATION Rockaway Wellfield Superfund Site, EM/WS,Rockaway Borough, East Main/Wall Street, Morris County, NJ

DATE 05 May 2011

CONTRACTOR CAPE Environmental Management Inc.

CONTRACT NUMBER W912DQ-05-D-0001 0005

ACTIVITY No.	TRANS-MITTAL No.	ITEM No.	SPEC PARAGRAPH No.	DESCRIPTION OF SUBMITTAL	TYPE OF SUBMITTAL	CLASSI-FICATION FIO GA, DA or CR	CONTRACTOR REVIEWER	CONTRACTOR SCHEDULE DATES SUBMIT NEEDED BY	APPROVAL NEEDED BY	MATERIAL NEEDED BY	CONTRACTOR ACTION CODE	CORPS RECEIVED DATE	GOVERNMENT ACTION CODE	CORPS RETURNED DATE
	12	19	02670	Wellscreen Design for EW-6	DESIGN DATA	GA	mdl				A	06 Aug 07	B	13 Aug 07
	13	20	02670	Wellscreen Design for EW-5	DESIGN DATA	GA	mdl				A	20 Aug 07	B	20 Aug 07
	14	21	02670	Pump Test Operator License	CERTIFICATES	FIO	mdl				A	20 Aug 07	F	21 Aug 07
	15	22	02670 1.1	Qtr Monitoring Report 07/01/10-09/30/10	RECORDS	FIO					A	15 Oct 10	F	15 Oct 10
A2140		23	02670 1.3	Well Force Main Connection	SHOP DRAWINGS	DA		28 Jun 11	28 Jun 11	28 Jun 11				
A2030	16.2	24	02670 1.3	Extraction Well Designs 2011	PRODUCT DATA	FIO	mdl	15 Jan 11	14 Feb 11	14 Feb 11	A	15 Feb 11	F	16 Feb 11
	17	25	02670 RFP 9.0A	Extraction Well Materials	PRODUCT DATA	FIO	mdl				A	07 Mar 11	F	18 Apr 11
A2540		26	02670	Mill Certificates		DA/CR		07 Mar 11	06 Apr 11	06 Apr 11				
	17	27	02670 RFP 9.0A	Utility Notifications EW Install 2011	PRODUCT DATA	FIO	mdl				A	07 Mar 11	F	18 Apr 11
	18	28	02670 1.3	Extraction Well Permits 2011	PRECON SUBMTL	FIO	mdl				A	07 Mar 11	F	08 Mar 11
	19	29	02670 1.3	Pump/Pipe Resize Memo	PRODUCT DATA	FIO	mdl				A	10 Mar 11	F	24 Mar 11
	20	30	02670 1.3	Pitless Adapters	PRODUCT DATA	FIO	mdl				A	23 Mar 11	F	01 Apr 11
	21	31	02670 1.2.3	Completed Extraction Well Permits	PRODUCT DATA	FIO	mdl				A			
	22	32	02670 1.1	Qtr Monitoring Report 01/01/11-03/31/11	RECORDS	FIO	mdl				A	29 Apr 11	F	29 Apr 11
SECTION - 02676			**Extraction Well Head Detail**											
		1	02676 Detail C	Shop Drawing for Wellhead Modification a	SHOP DRAWINGS	DA								
SECTION - 02821			**Metal Fence and Gates**											
A2450		1	02821 1.03.A	Fencing Product Data	PRODUCT DATA	FIO	mdl	08 Jul 11	08 Jul 11	08 Jul 11				
A2450		2	02821 1.03.B	Fencing Shop Drawings	SHOP DRAWINGS	FIO	mdl	08 Jul 11	08 Jul 11	08 Jul 11				
A2450		3	02821 1.03.C, 2.0	Certifications	CERTIFICATES	FIO		08 Jul 11	08 Jul 11	08 Jul 11				
SECTION - 02921			**Seeding**											
A2450		1	02921 1.3.1	Seeding Schedule	PRODUCT DATA	FIO		08 Jun 11	08 Jul 11	08 Jul 11				
A2450		2	02921 1.3.2	Seeding Certification	CERTIFICATES	FIO		08 Jun 11	08 Jul 11	08 Jul 11				
A2450		3	02921 1.3.3	Soil Ammendments	CERTIFICATES	FIO		08 Jun 11	08 Jul 11	08 Jul 11				
A2310		4	02921 1.3.4	Maintenance Record	CLOSEOUT SUBMTL	FIO		10 Jul 11	09 Aug 11	09 Aug 11				
SECTION - 02950			**Loaming and Hydroseeding**											
A2450		1	02950 1.04.A	Samples - Material & Equipment	SAMPLES	DA		08 Jul 11	08 Jul 11	08 Jul 11				
A2450		2	02950 1.04.B	Shop Drawings, Upon Engineer's Request	SHOP DRAWINGS	DA		08 Jul 11	08 Jul 11	08 Jul 11				
A2450		3	02950 1.04.B	Test Results, Upon Engineer's Request	TEST REPORTS	FIO		08 Jul 11	08 Jul 11	08 Jul 11				
A2450		4	02950 1.04.B	Product Data, Upon Engineer's Request	PRODUCT DATA	DA		08 Jul 11	08 Jul 11	08 Jul 11				
A2450		5	02950 1.04.D	Qualifications and References of Landsca	PRECON SUBMTL	DA		08 Jul 11	08 Jul 11	08 Jul 11				
A2450		6	02950 2.01 F	Seed Mix Certificate of Compliance	CERTIFICATES	FIO		08 Jul 11	08 Jul 11	08 Jul 11				
A2450		7	02950 3.02.F	Fertilizing and Seeding Schedules	PRECON SUBMTL	DA		08 Jul 11	08 Jul 11	08 Jul 11				
SECTION - 03100			**Structural Concrete Formwork**											
A2620	1	1	03100 1.3.1	Shop Drawings Formwork	SHOP DRAWINGS	FIO	mdl	23 Jan 11	22 Feb 11	22 Feb 11	A	14 Feb 11	F	28 Feb 11

RANGE : ALL

SORT : SECTION & ITEM

SUBMITTAL REGISTER (ER 415-1-10)

TITLE AND LOCATION: Rockaway Wellfield Superfund Site, EM/WS,Rockaway Borough, East Main/Wall Street, Morris County, NJ

DATE: 05 May 2011

CONTRACTOR: CAPE Environmental Management Inc.

CONTRACT NUMBER: W912DQ-05-D-0001 0005

ACTIVITY No.	TRANS-MITTAL No.	ITEM No.	SPEC PARAGRAPH No.	DESCRIPTION OF SUBMITTAL	TYPE OF SUBMITTAL	CLASSI-FICATION FIO GA, DA or CR	CONTRACTOR REVIEWER	CONTRACTOR SCHEDULE DATES: SUBMIT NEEDED BY	APPROVAL NEEDED BY	MATERIAL NEEDED BY	CONTRACTOR ACTION: CODE	CORPS RECEIVED DATE	GOVERNMENT ACTION: CODE	CORPS RETURNED DATE
A2620	1	2	03100 1.3.2	Form Design	PRODUCT DATA	FIO	mdl	23 Jan 11	22 Feb 11	22 Feb 11	A	14 Feb 11	F	28 Feb 11
	2	3	03100 1.3.3	Form Releasing Materials	PRODUCT DATA	FIO	mdl				A	23 Feb 11	F	28 Feb 11
		4	03100 1.3.4	Form Releasing Agents	SAMPLES	FIO								
A2310		5	03100 1.3.6	Certificates	CERTIFICATES	FIO		10 Jul 11	09 Aug 11	09 Aug 11				
	3	6	03100 1.3.2	Drawings - Stem Wall and Slab	SHOP DRAWINGS	FIO	mdl				A	08 Mar 11	F	12 Mar 11
	3	7	03100 1.3.2	Form Design - Stem Wall and Slab	PRODUCT DATA	FIO	mdl				A	08 Mar 11	F	12 Mar 11
A2780	4	8	03100 1.3.2	Drawings-Tie Beam, Pads and Steps	SHOP DRAWINGS	FIO	mdl	26 Mar 11	25 Apr 11	25 Apr 11	A	29 Mar 11	F	
A2780	4	9	03100 1.3.2	Form Design-Tie Beam, Pads and Steps	PRODUCT DATA	FIO	mdl	26 Mar 11	25 Apr 11	25 Apr 11	A	29 Mar 11	F	
SECTION - 03150			**Expansion/Contr & Const Joints, Concrete**											
	1	1	03150 1.3.1	Product Data	PRODUCT DATA	FIO	mdl				A	23 Feb 11	F	28 Feb 11
A2310		2	03150 1.3.2	Certifications	CERTIFICATES	FIO		10 Jul 11	09 Aug 11	09 Aug 11				
SECTION - 03301			**Concrete Reinforcing Steel**											
	3.1	1	03301 1.03.A	Shop Drawings	SHOP DRAWINGS	FIO	mdl				A	04 Mar 11	F	17 Mar 11
	2	2	03301 1.03.A	Water Reducing Admixture - Alimi	PRODUCT DATA	FIO	mdl				A	07 Jan 11	FX	24 Jan 11
A2640	1.1	3	03301 1.03.B	Concrete Mix Design - Allied Concrete	TEST REPORTS	FIO	mdl	04 Mar 11	04 Mar 11	04 Mar 11	A	11 Mar 11	F	17 Mar 11
R1000	4	4	03301 1.03.B	Mix Design Toping Concrete - Alimi	DESIGN DATA	FIO	mdl	31 May 11	31 May 11	31 May 11	A	17 Jan 11	F	19 Jan 11
A2640	5	5	03301 1.03A.3	Pozzolith 220N Water Reducing Admixture	PRODUCT DATA	FIO	mdl	02 Feb 11	04 Mar 11	04 Mar 11	A	17 Jan 11	F	19 Jan 11
A2640	6	6	03301 1.03A.3	MSDSs for curing agents/admixtures	PRODUCT DATA	FIO	mdl	02 Feb 11	04 Mar 11	04 Mar 11	A	19 Jan 11	F	24 Jan 11
A2640	7	7	03301 1.03B	Conc Mix Design Aggregate - Alimi	TEST REPORTS	FIO	mdl	02 Feb 11	04 Mar 11	04 Mar 11	A	25 Jan 11	F	04 Feb 11
A2640	8	8	03301 1.03B	Concrete Mix Design - Alimi	TEST REPORTS	FIO	mdl	02 Feb 11	04 Mar 11	04 Mar 11	A	25 Jan 11	A	04 Feb 11
	9	9	03301 1.03A.2	Polycast Trench Drain & Accessories	PRODUCT DATA	FIO	mdl				A	14 Feb 11	F	16 Feb 11
SECTION - 03320			**Flowable Fill**											
A2120		1	03320 1.3.1	Shop Drawings	SHOP DRAWINGS	FIO		15 Mar 11	14 Apr 11	14 Apr 11				
A2120		2	03320 1.3.1	Product Data	PRODUCT DATA	FIO		15 Mar 11	14 Apr 11	14 Apr 11				
A2310		3	03320 1.3.2	Test Reports	TEST REPORTS	FIO		10 Jul 11	09 Aug 11	09 Aug 11				
SECTION - 03410			**Precast Concrete Structures**											
	1	1	03410 1.04.C, D	Vaults & Handholes Shop Drawings	SHOP DRAWINGS	FIO	mdl				A	23 Mar 11	F	01 Apr 11
	1	2	03410 1.04.D	Vaults & Handholes Materials	PRODUCT DATA	FIO	mdl				A	23 Mar 11	F	01 Apr 11
	1	3	03410 1.04.D	Vaults & Handholes MOC Details	PRODUCT DATA	FIO	mdl				A	23 Mar 11	F	01 Apr 11
	1	4	03410 1.04.D	Vaults & Handholes Design/Calculations	DESIGN DATA	FIO	mdl				A	23 Mar 11	F	01 Apr 11
	1	5	03410 1.04.D	Vaults & Handholes Concrete Mix Design	DESIGN DATA	FIO	mdl				A	23 Mar 11	F	01 Apr 11
A2130		6	03410 1.04.D	Details of Installation	PRODUCT DATA	DA		08 Apr 11	08 Apr 11	08 Apr 11				
A2310	3	7	03410 1.04.D, G	Test Reports for EW-5A, 8 and 9 Vaults	TEST REPORTS	FIO	mdl	09 Aug 11	09 Aug 11	09 Aug 11	A	28 Mar 11	FX	
A2310	4	8	03410 1.04.E	Test Reports for EW-6 and EW-10 Vaults	TEST REPORTS	FIO	mdl	09 Aug 11	09 Aug 11	09 Aug 11	A	31 Mar 11	FX	
A2310		9	03410 1.04.F	Material Certificates	CERTIFICATES	FIO		09 Aug 11	09 Aug 11	09 Aug 11				

RANGE : ALL

SORT : SECTION & ITEM

SUBMITTAL REGISTER (ER 415-1-10)

TITLE AND LOCATION: Rockaway Wellfield Superfund Site, EM/WS,Rockaway Borough, East Main/Wall Street, Morris County, NJ

DATE: 05 May 2011

CONTRACTOR: CAPE Environmental Management Inc.

CONTRACT NUMBER: W912DQ-05-D-0001 0005

ACTIVITY No.	TRANS-MITTAL No.	ITEM No.	SPEC PARAGRAPH No.	DESCRIPTION OF SUBMITTAL	TYPE OF SUBMITTAL	CLASSI-FICATION FIO GA, DA or CR	CONTRACTOR REVIEWER	CONTRACTOR SCHEDULE DATES: SUBMIT NEEDED BY	APPROVAL NEEDED BY	MATERIAL NEEDED BY	CONTRACTOR ACTION: CODE	CORPS RECEIVED DATE	GOVERNMENT ACTION: CODE	CORPS RETURNED DATE
A2310		10	03410 3.02	Leakage Test Results	TEST REPORTS	FIO		09 Aug 11	09 Aug 11	09 Aug 11				
R1000	6	11	03410 1.04D	Hollowcore Roof Plank Design	DESIGN DATA	FIO	mdl	01 May 11	31 May 11	31 May 11	A	05 Apr 11	F	07 Apr 11
A1640	2	12	03410 1.04C/D	Catch Basin and Cleanout Manhole Design	SHOP DRAWINGS	FIO	mdl	29 May 11	28 Jun 11	28 Jun 11	A	28 Mar 11	F	18 Apr 11
A1640	2	13	03410 1.04D	Ladder Rung Product Data	PRODUCT DATA	FIO	mdl	29 May 11	28 Jun 11	28 Jun 11	A	28 Mar 11	F	18 Apr 11
A1640	2	14	03410 1.04D	Convex Catch Basin Cover	PRODUCT DATA	FIO	mdl	29 May 11	28 Jun 11	28 Jun 11	A	28 Mar 11	F	18 Apr 11
A3800	7	15	03410 1.04C/D	EW-6 Manhole	DESIGN DATA	FIO	mdl	23 Mar 11	22 Apr 11	22 Apr 11	A	11 Apr 11	F	18 Apr 11
A2120	5	16	03410 1.04C/D	Forcemain Cleanouts Manholes	DESIGN DATA	FIO	mdl	15 Mar 11	14 Apr 11	14 Apr 11	A	05 Apr 11	F	
SECTION - 03511			**Sidewalks and Curbs**											
A2120	1	1	03511 1.03	Concrete Mix Design - Paverite	DESIGN DATA	FIO	mdl	14 Apr 11	14 Apr 11	14 Apr 11	A	23 Mar 11	F	01 Apr 11
A2310		2	03511 3.09	Concrete Inspection Test Reports	TEST REPORTS	FIO		09 Aug 11	09 Aug 11	09 Aug 11				
A2450	2	3	03511 2.2	Reinforcing Steel - Paverite	PRODUCT DATA	FIO	mdl	08 Jun 11	08 Jul 11	08 Jul 11	A	28 Mar 11	F	01 Apr 11
SECTION - 04200			**Masonry**											
M1010	1.1	1	04200 B	CMU Block Certifications - Alimi	CERTIFICATES	FIO	mdl	28 Apr 11	28 Apr 11	03 May 11	A	01 Apr 11	F	
M1010	1.1	2	04200 D	Mortar Test Results - Alimi	TEST REPORTS	FIO	mdl	28 Apr 11	28 Apr 11	03 May 11	A	01 Apr 11	F	
M1000	2	3	04200 D.7	Portland Lime Mortar Mix Certificate	CERTIFICATES	FIO	mdl	28 Apr 11	28 Apr 11	28 Apr 11	A	17 Jan 11	F	19 Jan 11
M1000	2	4	04200 D.7	Portland Lime Mortar Mat'l Test Report	TEST REPORTS	FIO	mdl	28 Apr 11	28 Apr 11	28 Apr 11	A	17 Jan 11	F	19 Jan 11
M1000	2	5	04200 D.1	Type I/II Portland Cement Certificate	CERTIFICATES	FIO	mdl	29 Mar 11	28 Apr 11	28 Apr 11	A	17 Jan 11	F	19 Jan 11
M1000	2	6	04200 D.1	Type I/II Portland Cement Test Report	TEST REPORTS	FIO	mdl	29 Mar 11	28 Apr 11	28 Apr 11	A	17 Jan 11	F	19 Jan 11
M1000	2	7	04200 D.3	Mortar Sand Test Report	TEST REPORTS	FIO	mdl	29 Mar 11	28 Apr 11	28 Apr 11	A	17 Jan 11	F	19 Jan 11
M1000	2	8	04200 D.2	Finish Lime/Mortar Lime Certificate	CERTIFICATES	FIO	mdl	29 Mar 11	28 Apr 11	28 Apr 11	A	17 Jan 11	F	19 Jan 11
M1000	3	9	04200 A	Face Brick Veneer Anchors	PRODUCT DATA	FIO	mdl	29 Mar 11	28 Apr 11	28 Apr 11	A	17 Jan 11	F	19 Jan 10
M1000	4	10	04200 D.4	Integral Water Repellent	PRODUCT DATA	FIO	mdl	29 Mar 11	28 Apr 11	28 Apr 11	A	19 Jan 11	F	24 Jan 11
M1000	5	11	04200 E.1	Weep Hole Vents	PRODUCT DATA	FIO	mdl	29 Mar 11	28 Apr 11	28 Apr 11	A	31 Jan 11	F	04 Feb 11
M1050	10	12	04200 D.8	Lintels	PRODUCT DATA	FIO	mdl	13 Apr 11	13 May 11	13 May 11	A	26 Apr 11	F	28 Apr 11
M1100	6	13	04200 A.1/2/3	Face Brick	PRODUCT DATA	FIO	mdl	01 May 11	31 May 11	31 May 11	A	17 Mar 11	F	04 Apr 11
	8	14	04200 E.3	Joint Filler - Neoprene	PRODUCT DATA	FIO	mdl				A	26 Apr 11	F	28 Apr 11
	8	15	04200 D.9	Non-shrink Grout	PRODUCT DATA	FIO	mdl				A	26 Apr 11	F	28 Apr 11
	8	16	04200 E	Mortarnet	PRODUCT DATA	FIO	mdl				A	26 Apr 11	F	28 Apr 11
	8	17	04200 E.1	Backer Rod	PRODUCT DATA	FIO	mdl				A	26 Apr 11	F	28 Apr 11
	7	18	04200 D.1	Grout - Corefill	PRODUCT DATA	FIO	mdl				A	26 Apr 11	F	28 Apr 11
	9	19	04200 D.9	Non-shrink Grout - Quikcrete	PRODUCT DATA	FIO	mdl				A	26 Apr 11	F	28 Apr 11
	11	20	04200 Detail C	Control Joint	PRODUCT DATA	FIO	mdl				A			
SECTION - 05500			**Miscellaneous Metal**											
DWP120	3	1	05500 Detail D	Bollard Pipe Product Data	PRODUCT DATA	FIO	mdl	04 Jul 11	04 Jul 11	04 Jul 11	A			
DWP120	1	2	05500 1.03.A	Stair Nosing	PRODUCT DATA	FIO	mdl	04 Jul 11	04 Jul 11	04 Jul 11	A	28 Mar 11	F	01 Apr 11

RANGE : ALL

SORT : SECTION & ITEM

SUBMITTAL REGISTER (ER 415-1-10)

TITLE AND LOCATION: Rockaway Wellfield Superfund Site, EM/WS,Rockaway Borough, East Main/Wall Street, Morris County, NJ

DATE: 05 May 2011

CONTRACTOR: CAPE Environmental Management Inc.

CONTRACT NUMBER: W912DQ-05-D-0001 0005

ACTIVITY No.	TRANS-MITTAL No.	ITEM No.	SPEC PARAGRAPH No.	DESCRIPTION OF SUBMITTAL	TYPE OF SUBMITTAL	CLASSI-FICATION FIO GA, DA or CR	CONTRACTOR REVIEWER	CONTRACTOR SCHEDULE DATES: SUBMIT NEEDED BY	APPROVAL NEEDED BY	MATERIAL NEEDED BY	CONTRACTOR ACTION: CODE	CORPS RECEIVED DATE	GOVERNMENT ACTION: CODE	CORPS RETURNED DATE
DWP120		3	05500 1.03.B	Calculations - Loads on Railings	DESIGN DATA	DA		04 Jul 11	04 Jul 11	04 Jul 11				
DWP120		4	05500 1.03.B	Manufacturer's Load and Deflection Table	PRODUCT DATA	FIO		04 Jul 11	04 Jul 11	04 Jul 11				
DWP120		5	05500 1.03.C	Railing System OSHA Certification	CERTIFICATES	FIO		04 Jul 11	04 Jul 11	04 Jul 11				
DWP120		6	05500 Detail B	Sole Plate	SHOP DRAWINGS	DA		04 Jul 11	04 Jul 11	04 Jul 11				
A2790	2	7	05500 1.03A	Sump Grate and Frame	PRODUCT DATA	FIO	mdl	28 Mar 11	27 Apr 11	27 Apr 11	A	28 Mar 11	F	01 Apr 11
	4	8	05500 3	Louvers	PRODUCT DATA	FIO	mdl				A			
SECTION - 07005			**AMIPRO and Waterproofing**											
	1	1	07005 A,B,C	Dampproofing AMIPRO	PRODUCT DATA	FIO	mdl				A	01 Mar 11	F	12 Mar 11
A2790	2	2	07005 C	Through Wall Flashing	DESIGN DATA	FIO	mdl	27 Apr 11	27 Apr 11	27 Apr 11	A	26 Apr 11	F	28 Apr 11
A2310		3	07005 A,B,C	Dampproofing and Waterproofing	CERTIFICATES	FIO		09 Aug 11	09 Aug 11	09 Aug 11				
SECTION - 07231			**Perimeter Insulation and Vapor Barrier**											
A2650	1	1	07231 A	Perimeter Insulation	PRODUCT DATA	FIO	mdl	07 Mar 11	07 Mar 11	07 Mar 11	A	31 Jan 11	F	04 Feb 11
A2650	2	2	07231 B	Vapor Barrier	PRODUCT DATA	FIO	mdl	05 Feb 11	07 Mar 11	07 Mar 11	A	31 Jan 11	F	04 Feb 11
SECTION - 07510			**SBS Modified Bitumen Roofing System**											
R1000	1	1	07510 C/D/E	SBS Roofing Product Data	PRODUCT DATA	FIO	mdl	31 May 11	31 May 11	31 May 11	A			
R1000		2	07510 A - H	Roofing System	PRODUCT DATA	DA		31 May 11	31 May 11	31 May 11				
R1000		3	07510 A - H	Roofing System	SAMPLES	DA		31 May 11	31 May 11	31 May 11				
R1000		4	07510 A - H	Roofing System	DESIGN DATA	DA		31 May 11	31 May 11	31 May 11				
R1000		5	07510 A - H	Roofing System	TEST REPORTS	FIO		31 May 11	31 May 11	31 May 11				
R1000		6	07510 A - H	Roofing System	CERTIFICATES	FIO		31 May 11	31 May 11	31 May 11				
SECTION - 07700			**Equipment Access Scuttle**											
R1010	1	1	07700 A	Equipment Access Hatch	SHOP DRAWINGS	FIO	mdl	15 Jun 11	15 Jun 11	15 Jun 11	A	05 Apr 11	F	18 Apr 11
R1010	1	2	07700 A	Equipment Access Hatch	PRODUCT DATA	FIO	mdl	15 Jun 11	15 Jun 11	15 Jun 11	A	05 Apr 11	F	18 Apr 11
R1010		3	07700 A	Equipment Access Hatch	DESIGN DATA	DA		31 May 11	31 May 11	31 May 11				
A2310		4	07700 A	Equipment Access Hatch	TEST REPORTS	FIO		09 Aug 11	09 Aug 11	09 Aug 11				
A2310		5	07700 A	Equipment Access Hatch	CERTIFICATES	FIO		09 Aug 11	09 Aug 11	09 Aug 11				
SECTION - 07900			**Joint Sealants**											
M1000	1	1	07900 A,B	Joint Sealant - Sikaflex-15LM	PRODUCT DATA	FIO	mdl	28 Apr 11	28 Apr 11	28 Apr 11	A	26 Apr 11	F	28 Apr 11
M1000		2	07900 A,B	Window and Door Frame Sealant-Intex	PRODUCT DATA	FIO	mdl	29 Mar 11	28 Apr 11	28 Apr 11				
M1000		3	07900 A,B	Joint Sealants	DESIGN DATA	DA		28 Apr 11	28 Apr 11	28 Apr 11				
A2310		4	07900 A,B	Joint Sealants	CERTIFICATES	FIO		10 Jul 11	09 Aug 11	09 Aug 11				
SECTION - 08120			**Aluminum Doors and Frames**											
M1000		1	08120 A - F	Aluminum Doors and Frames	SHOP DRAWINGS	DA		28 Apr 11	28 Apr 11	28 Apr 11				
M1000		2	08120 A - F	Aluminum Doors and Frames	PRODUCT DATA	DA		28 Apr 11	28 Apr 11	28 Apr 11				
M1000		3	08120 A - F	Frame Anchors	PRODUCT DATA	FIO	mdl	29 Mar 11	28 Apr 11	28 Apr 11				

RANGE : ALL

SORT : SECTION & ITEM

SUBMITTAL REGISTER (ER 415-1-10)

TITLE AND LOCATION: Rockaway Wellfield Superfund Site, EM/WS,Rockaway Borough, East Main/Wall Street, Morris County, NJ

DATE: 05 May 2011

CONTRACTOR: CAPE Environmental Management Inc.

CONTRACT NUMBER: W912DQ-05-D-0001 0005

ACTIVITY No.	TRANS-MITTAL No.	ITEM No.	SPEC PARAGRAPH No.	DESCRIPTION OF SUBMITTAL	TYPE OF SUBMITTAL	CLASSI-FICATION FIO GA, DA or CR	CONTRACTOR REVIEWER	CONTRACTOR SCHEDULE DATES: SUBMIT NEEDED BY	APPROVAL NEEDED BY	MATERIAL NEEDED BY	CONTRACTOR ACTION: CODE	CORPS RECEIVED DATE	GOVERNMENT ACTION: CODE	CORPS RETURNED DATE
SECTION - 08390			**Watertight Doors**											
M1000		1	08390 A - J	Watertight Doors	SHOP DRAWINGS	FIO	mdl	28 Apr 11	28 Apr 11	28 Apr 11				
M1000		2	08390 A - J	Watertight Doors	PRODUCT DATA	FIO	mdl	28 Apr 11	28 Apr 11	28 Apr 11				
M1000		3	08390 A - J	Watertight Doors	DESIGN DATA	DA		28 Apr 11	28 Apr 11	28 Apr 11				
A2310		4	08390 A - J	Watertight Doors	TEST REPORTS	FIO		09 Aug 11	09 Aug 11	09 Aug 11				
A2310		5	08390 A - J	Watertight Doors	CERTIFICATES	FIO		09 Aug 11	09 Aug 11	09 Aug 11				
SECTION - 08522			**Aluminum Windows**											
M1000		1	08522 A	Aluminum Windows Drawings	SHOP DRAWINGS	FIO	mdl	28 Apr 11	28 Apr 11	28 Apr 11				
M1000		2	08522 A	Aluminum Windows Product Data	PRODUCT DATA	FIO	mdl	28 Apr 11	28 Apr 11	28 Apr 11				
M1000		3	08522 A	Aluminum Windows Design Data	DESIGN DATA	FIO	mdl	28 Apr 11	28 Apr 11	28 Apr 11				
SECTION - 08710			**Door Hardware**											
M1000		1	08710 A - C	Finish Hardware	PRODUCT DATA	DA		28 Apr 11	28 Apr 11	28 Apr 11				
SECTION - 08800			**Glazing**											
M1000		1	08800 A	Glass	PRODUCT DATA	DA		28 Apr 11	28 Apr 11	28 Apr 11				
SECTION - 09900			**Painting**											
DWP110		1	09900 A,B	Painting	PRODUCT DATA	FIO	mdl	27 Jun 11	27 Jun 11	27 Jun 11				
DWP160		2	09900 A,B	Painting	TEST REPORTS	FIO		05 Jul 11	05 Jul 11	05 Jul 11				
DWP160		3	09900 A,B	Painting	CERTIFICATES	FIO		05 Jul 11	05 Jul 11	05 Jul 11				
SECTION - 09901			**Surface Preparation and Shop Prime Painting**											
DWP110		1	09901 1.03.A	Shop Drawings	SHOP DRAWINGS	DA		27 Jun 11	27 Jun 11	27 Jun 11				
DWP110		2	09901 1.03.A	Manufacturer's Specifications and Data	PRODUCT DATA	DA		27 Jun 11	27 Jun 11	27 Jun 11				
DWP110		3	09901 1.03.B	Primer Samples (if required by Engineer)	SAMPLES	DA		27 Jun 11	27 Jun 11	27 Jun 11				
DWP110		4	09901 3.02.D	Evidence of Compatablilty of Paints	PRODUCT DATA	FIO		27 Jun 11	27 Jun 11	27 Jun 11				
SECTION - 10001														
		4	10001			GA								
SECTION - 10522			**Fire Extinguishers**											
A2430	1	1	10522 A,B	Fire Extinguishers	PRODUCT DATA	FIO	mdl	22 Jul 11	22 Jul 11	22 Jul 11	A	22 Mar 11	F	
A2430		2	10522 A,B	Fire Extinguishers	TEST REPORTS	FIO		22 Jul 11	22 Jul 11	22 Jul 11				
A2430		3	10522 A,B	Fire Extinguishers	CERTIFICATES	FIO		22 Jul 11	22 Jul 11	22 Jul 11				
SECTION - 11319			**Sump Pump**											
A3330		1	11319 Note 18	Sump Pump - shop drawings	SHOP DRAWINGS	DA	mdl	22 Jun 11	22 Jun 11	22 Jun 11				
A3330		2	11319 Note 18	Sump Pump - manufacturers rating curves	DESIGN DATA	DA	mdl	22 Jun 11	22 Jun 11	22 Jun 11				
A3330		3	11319 Note 18	Sump Pump - parts list	PRODUCT DATA	FIO	mdl	22 Jun 11	22 Jun 11	22 Jun 11				
A3330		4	11319 Note 18	Sump Pump - certified pump test data	TEST REPORTS	FIO	mdl	22 Jun 11	22 Jun 11	22 Jun 11				
A3330		5	11319 Note 18	Sump Pump - motor data including Hp, V,	DESIGN DATA	FIO	mdl	22 Jun 11	22 Jun 11	22 Jun 11				

RANGE : ALL

SORT : SECTION & ITEM

SUBMITTAL REGISTER (ER 415-1-10)

TITLE AND LOCATION: Rockaway Wellfield Superfund Site, EM/WS,Rockaway Borough, East Main/Wall Street, Morris County, NJ

DATE: 05 May 2011

CONTRACTOR: CAPE Environmental Management Inc.

CONTRACT NUMBER: W912DQ-05-D-0001 0005

ACTIVITY No.	TRANS-MITTAL No.	ITEM No.	SPEC PARAGRAPH No.	DESCRIPTION OF SUBMITTAL	TYPE OF SUBMITTAL	CLASSI-FICATION FIO GA, DA or CR	CONTRACTOR REVIEWER	CONTRACTOR SCHEDULE DATES: SUBMIT NEEDED BY	APPROVAL NEEDED BY	MATERIAL NEEDED BY	CONTRACTOR ACTION: CODE	CORPS RECEIVED DATE	GOVERNMENT ACTION: CODE	CORPS RETURNED DATE
A3330		6	11319 Note 18	Sump Pump - complete wiring diagram and	DESIGN DATA	DA	mdl	22 Jun 11	22 Jun 11	22 Jun 11				
A2310		7	11319 Note 18	Sump Pump - manufacturers waranty	CERTIFICATES	FIO	mdl	09 Aug 11	09 Aug 11	09 Aug 11				
A2310		8	11319 Note 18	Sump Pump - field test results	TEST REPORTS	FIO	mdl	09 Aug 11	09 Aug 11	09 Aug 11				
SECTION - 11350			**Removable Tray Air Stripper**											
A1820	1	1	11350 1.04.A	Shop and Erection Drawings	SHOP DRAWINGS	FIO	mdl	17 May 11	17 May 11	17 May 11	A			
A1820	1	2	11350 1.04.A	Equipment Information	PRODUCT DATA	FIO	mdl	17 May 11	17 May 11	17 May 11	A			
A1820	1	3	11350 1.04.A	Pressure Drop	DESIGN DATA	FIO	mdl	17 Apr 11	17 May 11	17 May 11	A			
A1820	1	4	11350 1.04.A	System Flow Schematic or Pipe Layout	DESIGN DATA	FIO	mdl	17 May 11	17 May 11	17 May 11	A			
A1820		5	11350 1.04.A	Master Wiring Diagrams and Schematics	DESIGN DATA	FIO	mdl	17 May 11	17 May 11	17 May 11				
A1820		6	11350 1.04.A	List of Spare Parts	PRODUCT DATA	FIO	mdl	17 May 11	17 May 11	17 May 11				
A2310		7	11350 1.04.A	Test Results	TEST REPORTS	FIO	mdl	09 Aug 11	09 Aug 11	09 Aug 11				
A1820	1	8	11350 1.04.A	Weight of Equipment	PRODUCT DATA	FIO	mdl	17 May 11	17 May 11	17 May 11	A			
A1820	1	9	11350 1.04.A	Structural Design Calculations	DESIGN DATA	FIO	mdl	17 May 11	17 May 11	17 May 11	A			
A1820	1	10	11350 1.04.B	O & M Literature	O&M DATA	FIO	mdl	17 May 11	17 May 11	17 May 11	A			
A2310	1	11	11350 3.05	Warranty	CERTIFICATES	FIO	mdl	09 Aug 11	09 Aug 11	09 Aug 11	A			
A3310		12	11350 1.04A.2	Exhaust Fans	PRODUCT DATA	FIO	mdl	06 Jun 11	06 Jul 11	06 Jul 11				
A3310		13	11350 1.04A.2	Unit Heaters	PRODUCT DATA	FIO	mdl	06 Jun 11	06 Jul 11	06 Jul 11				
SECTION - 11355			**Bagfilter**											
A1930	1.1	1	11355 Note 19	Bag filter housing- shop drawings	SHOP DRAWINGS	FIO	mdl	21 Feb 11	21 Feb 11	21 Feb 11	A	08 Mar 11	F	25 Mar 11
A1930	1.1	2	11355 Note 19	Bag filter housing- manufacturers info i	PRODUCT DATA	FIO	mdl	21 Feb 11	21 Feb 11	21 Feb 11	A	08 Mar 11	F	25 Mar 11
A1930	1.1	3	11355 Note 19	Bag filter - certification	CERTIFICATES	FIO	mdl	21 Feb 11	21 Feb 11	21 Feb 11	A	08 Mar 11	F	25 Mar 11
A1930	1.1	4	11355 Note 19	Bag filter - manufacturers waranty	CERTIFICATES	FIO	mdl	21 Feb 11	21 Feb 11	21 Feb 11	A	08 Mar 11	F	25 Mar 11
A2310	2	5	11355 Note 19	Bagfilter - Pressure Test and Inspection	TEST REPORTS	FIO	mdl	09 Aug 11	09 Aug 11	09 Aug 11	A	22 Mar 11	F	01 Apr 11
		6	11355 Note 19	Filter bags - shop drawings	SHOP DRAWINGS	DA								
A1930	1.1	7	11355 Note 19	Filter bags - manfuacturers literature	PRODUCT DATA	FIO	mdl	21 Feb 11	21 Feb 11	21 Feb 11	A	08 Mar 11	F	25 Mar 11
SECTION - 11396			**Vapor Phase GAC Adsorbers**											
A1820	1	1	11396 1.03.A	Shop Drawings	SHOP DRAWINGS	FIO	mdl	17 May 11	17 May 11	17 May 11	A			
A1820	1	2	11396 1.03.A	Manufacturer's literature	PRODUCT DATA	FIO	mdl	17 May 11	17 May 11	17 May 11	A			
A1820	1	3	11396 1.03.A	Design Calculations	DESIGN DATA	FIO	mdl	17 May 11	17 May 11	17 May 11	A			
A1820	1	4	11396 1.03.A	Media Specifications	PRODUCT DATA	FIO	mdl	17 May 11	17 May 11	17 May 11	A			
A1820	1	5	11396 1.03.A	Vessel Interior and Exterior Coating	PRODUCT DATA	FIO	mdl	17 May 11	17 May 11	17 May 11	A			
A1820	1	6	11396 1.03.A	Equipment Weights	PRODUCT DATA	FIO	mdl	17 May 11	17 May 11	17 May 11	A			
A1820	1	7	11396 1.03.A	Design Calculation Certification	CERTIFICATES	FIO	mdl	17 May 11	17 May 11	17 May 11	A			
A1820		8	11396 1.03.A	GAC Vessel Certification	CERTIFICATES	FIO		17 May 11	17 May 11	17 May 11				
A1820		9	11396 1.03.A	Exceptions Proposed by Supplier	PRECON SUBMTL	DA		17 May 11	17 May 11	17 May 11				

RANGE : ALL

SORT : SECTION & ITEM

SUBMITTAL REGISTER (ER 415-1-10)

TITLE AND LOCATION: Rockaway Wellfield Superfund Site, EM/WS,Rockaway Borough, East Main/Wall Street, Morris County, NJ

DATE: 05 May 2011

CONTRACTOR: CAPE Environmental Management Inc.

CONTRACT NUMBER: W912DQ-05-D-0001 0005

ACTIVITY No.	TRANS-MITTAL No.	ITEM No.	SPEC PARAGRAPH No.	DESCRIPTION OF SUBMITTAL	TYPE OF SUBMITTAL	CLASSI-FICATION FIO GA, DA or CR	CONTRACTOR REVIEWER	CONTRACTOR SCHEDULE DATES: SUBMIT NEEDED BY	APPROVAL NEEDED BY	MATERIAL NEEDED BY	CONTRACTOR ACTION: CODE	CORPS RECEIVED DATE	GOVERNMENT ACTION: CODE	CORPS RETURNED DATE
A2310		10	11396 1.03.A	Warranty	CERTIFICATES	FIO		09 Aug 11	09 Aug 11	09 Aug 11				
A2310		11	11396 1.03.A	O & M Instructions		FIO		09 Aug 11	09 Aug 11	09 Aug 11				
A1820		12	11396 1.03.B, 2.0	Factory Test Report	TEST REPORTS	FIO		17 May 11	17 May 11	17 May 11				
A1820		13	11396 1.03.B	Field Inspection	MFRS FLD REPT	FIO		17 May 11	17 May 11	17 May 11				
A2310		14	11396 1.03.B	Test Report	TEST REPORTS	FIO		09 Aug 11	09 Aug 11	09 Aug 11				
A2310		15	11396 1.03.B	Manufacturer's Certificate of Proper Ins	CERTIFICATES	FIO		09 Aug 11	09 Aug 11	09 Aug 11				
A1820		16	11396 1.05.B	Tank Fabrication and Installation Schedu	PRECON SUBMTL	FIO		17 May 11	17 May 11	17 May 11				
A1820		17	11396 2.06.F	GAC Data	PRODUCT DATA	DA		17 May 11	17 May 11	17 May 11				
SECTION - 11760			**First Aid Kits**											
A2310		1	11760 A,B	First Aid Kit	PRODUCT DATA	DA		09 Aug 11	09 Aug 11	09 Aug 11				
SECTION - 13420			**Instruments**											
A3340	1	1	13420 1.3.A	Instrument Shop Drawings	SHOP DRAWINGS	FIO	mdl	29 Jun 11	29 Jun 11	29 Jun 11	A	22 Mar 11	F	01 Apr 11
A3340	1	2	13420 1.3.B	Instrument Product Data	PRODUCT DATA	FIO	mdl	29 Jun 11	29 Jun 11	29 Jun 11	A	22 Mar 11	F	01 Apr 11
A2310		3	13420 1.3.C	Test Reports	TEST REPORTS	FIO		09 Aug 11	09 Aug 11	09 Aug 11				
A3340	1	4	13420 1.3.D	Instrument Manufacturer's Instructions	MFRS INSTR	FIO	mdl	29 Jun 11	29 Jun 11	29 Jun 11	A	22 Mar 11	F	01 Apr 11
A2310		5	13420 1.3.E	Manufacturer's Field Reports	MFRS FLD REPT	FIO		09 Aug 11	09 Aug 11	09 Aug 11				
A2310		6	13420 1.4	Record Documents	CLOSEOUT SUBMTL	FIO		09 Aug 11	09 Aug 11	09 Aug 11				
A2310		7	13420 1.8	Warranty	CERTIFICATES	FIO		09 Aug 11	09 Aug 11	09 Aug 11				
		8	13420 1.3B	GW-1 Instruments	PRODUCT DATA	FIO	mdl							
SECTION - 13431			**Control Panels**											
A3320	2	1	13431 1.3.A	PLC Panel	SHOP DRAWINGS	FIO	mdl	06 Jul 11	06 Jul 11	06 Jul 11	A			
A3320	2	2	13431 1.3.B	PLC Panel Wiring Diagrams	DESIGN DATA	FIO	mdl	06 Jul 11	06 Jul 11	06 Jul 11	A			
A3320	2	3	13431 1.3.C	PLC Panel Layout Drawings	DESIGN DATA	FIO	mdl	06 Jul 11	06 Jul 11	06 Jul 11	A			
A3320		4	13431 1.3.D	Product Data	PRODUCT DATA	DA		06 Jul 11	06 Jul 11	06 Jul 11				
A3320		5	13431 1.3.E	Manufacturer's Instructions	MFRS INSTR	FIO		06 Jul 11	06 Jul 11	06 Jul 11				
A2310		6	13431 1.4	Record Documents	CLOSEOUT SUBMTL	FIO		09 Aug 11	09 Aug 11	09 Aug 11				
A2310		7	13431 1.7	Warranty	CERTIFICATES	FIO		09 Aug 11	09 Aug 11	09 Aug 11				
A3320	1	8	13431 1.3A	Remote I/O Panel	SHOP DRAWINGS	FIO	mdl	06 Jun 11	06 Jul 11	06 Jul 11	A			
A3320	1	9	13431 1.03B	Remote I/O Panel Wiring Diagram	DESIGN DATA	FIO	mdl	06 Jun 11	06 Jul 11	06 Jul 11	A			
A3320	1	10	13431 1.3.C	Remote I/O Panel Layout Drawings	DESIGN DATA	FIO	mdl	06 Jun 11	06 Jul 11	06 Jul 11	A			
SECTION - 13451			**Programmable Controllers**											
A3320		1	13451 1.3.A	Shop Drawings	SHOP DRAWINGS	DA		06 Jul 11	06 Jul 11	06 Jul 11				
A3320		2	13451 1.3.B	Product Data	PRODUCT DATA	DA		06 Jul 11	06 Jul 11	06 Jul 11				
A3320		3	13451 1.3.C	Manufacturer's Instructions	MFRS INSTR	FIO		06 Jul 11	06 Jul 11	06 Jul 11				
A3320		4	13451 1.3.D	PLC Ladder Logic Software and Databases	DESIGN DATA	DA		06 Jul 11	06 Jul 11	06 Jul 11				

RANGE : ALL

SORT : SECTION & ITEM

SUBMITTAL REGISTER (ER 415-1-10)

TITLE AND LOCATION: Rockaway Wellfield Superfund Site, EM/WS,Rockaway Borough, East Main/Wall Street, Morris County, NJ

DATE: 05 May 2011

CONTRACTOR: CAPE Environmental Management Inc.

CONTRACT NUMBER: W912DQ-05-D-0001 0005

ACTIVITY No.	TRANS-MITTAL No.	ITEM No.	SPEC PARAGRAPH No.	DESCRIPTION OF SUBMITTAL	TYPE OF SUBMITTAL	CLASSI-FICATION FIO GA, DA or CR	CONTRACTOR REVIEWER	CONTRACTOR SCHEDULE DATES: SUBMIT NEEDED BY	APPROVAL NEEDED BY	MATERIAL NEEDED BY	CONTRACTOR ACTION: CODE	CORPS RECEIVED DATE	GOVERNMENT ACTION: CODE	CORPS RETURNED DATE
A3320		5	13451 1.4	Backup Copy of PLC Software Source Codes	CLOSEOUT SUBMTL	FIO		06 Jul 11	06 Jul 11	06 Jul 11				
A2310		6	13451 1.9	Warranty	CERTIFICATES	FIO		09 Aug 11	09 Aug 11	09 Aug 11				
		8	13451			GA								
SECTION - 13452			**SCADA Computer System**											
A3320		1	13452 1.3.A	Shop Drawings	SHOP DRAWINGS	DA		06 Jul 11	06 Jul 11	06 Jul 11				
A3320		2	13452 1.3.B	Product Data	PRODUCT DATA	DA		06 Jul 11	06 Jul 11	06 Jul 11				
A3320		3	13452 1.3.C	Manufacturer's Instructions	MFRS INSTR	FIO		06 Jul 11	06 Jul 11	06 Jul 11				
A3320		4	13452 1.3.D	SCADA Screens, Databases, and Codes	DESIGN DATA	DA		06 Jul 11	06 Jul 11	06 Jul 11				
A3320		5	13452 1.4	Backup Copy of SCADA HMI Codes	CLOSEOUT SUBMTL	FIO		06 Jul 11	06 Jul 11	06 Jul 11				
A2310		6	13452 1.8	Warranty	CERTIFICATES	FIO		09 Aug 11	09 Aug 11	09 Aug 11				
SECTION - 15051			**Piping - General Requirements**											
A3340		1	15051 1.03.B	Potable Supply Lines	SHOP DRAWINGS	FIO	mdl	30 May 11	29 Jun 11	29 Jun 11				
A3340	1	2	15051 1.03.B	Copper Pipe & Fittings	PRODUCT DATA	FIO	mdl	29 Jun 11	29 Jun 11	29 Jun 11	A	17 Jan 11	F	19 Jan 11
A3340		3	15051 1.03.C	Samples	SAMPLES	DA		29 Jun 11	29 Jun 11	29 Jun 11				
A3340		4	15051 1.03.D	Design Data	DESIGN DATA	DA		29 Jun 11	29 Jun 11	29 Jun 11				
A3340		5	15051 1.03.E	Shop Test Reports	TEST REPORTS	FIO		29 Jun 11	29 Jun 11	29 Jun 11				
A3340		6	15051 1.03.E	Field Test Reports	TEST REPORTS	FIO		29 Jun 11	29 Jun 11	29 Jun 11				
A3340		7	15051 1.03.F	Welder's Certificates	CERTIFICATES	FIO		29 Jun 11	29 Jun 11	29 Jun 11				
A3340		8	15051 1.03.G	Manufacturer's Installation or Applicati	MFRS INSTR	FIO		29 Jun 11	29 Jun 11	29 Jun 11				
A3340		9	15051 1.03.H	Statement of Qualifications	PRECON SUBMTL	FIO		29 Jun 11	29 Jun 11	29 Jun 11				
A2310		10	15051 1.03.I	Manufacturer's Field Report	MFRS FLD REPT	FIO		09 Aug 11	09 Aug 11	09 Aug 11				
A2310		11	15051 1.03.J	Project Record Documents	CLOSEOUT SUBMTL	FIO		09 Aug 11	09 Aug 11	09 Aug 11				
A2310		12	15051 1.03.K	O&M Data		FIO		09 Aug 11	09 Aug 11	09 Aug 11				
A2310		13	15051 1.03.x	Warranties	CERTIFICATES	FIO		09 Aug 11	09 Aug 11	09 Aug 11				
SECTION - 15055														
		4	15055			GA								
SECTION - 15063			**Copper Pipe and Tubing**											
A1690	1	1	15063 2.03	Lead Free Solder	PRODUCT DATA	FIO	mdl	29 May 11	28 Jun 11	28 Jun 11	A	14 Jan 11	F	31 Jan 11
SECTION - 15072			**Ductile Iron Pipe and Fittings**											
A3340		1	15072 1.02	Affadavit of Compliance from Manufacture	CERTIFICATES	FIO		29 Jun 11	29 Jun 11	29 Jun 11				
A3340		2	15072 3.01.C	Certification of Pipe Loads, if required	CERTIFICATES	FIO		29 Jun 11	29 Jun 11	29 Jun 11				
SECTION - 15075			**Flexible Hose**											
A3340		1	15075 Note 20	Flexible hose - shop drawings	SHOP DRAWINGS	DA		29 Jun 11	29 Jun 11	29 Jun 11				
A3340		2	15075 Note 20	Flexible hose - product data	PRODUCT DATA	DA		29 Jun 11	29 Jun 11	29 Jun 11				
A3340		3	15075 Note 20	Flexible hose - design data	DESIGN DATA	DA		29 Jun 11	29 Jun 11	29 Jun 11				

RANGE : ALL

SORT : SECTION & ITEM

SUBMITTAL REGISTER (ER 415-1-10)

TITLE AND LOCATION Rockaway Wellfield Superfund Site, EM/WS,Rockaway Borough, East Main/Wall Street, Morris County, NJ

DATE 05 May 2011

CONTRACTOR CAPE Environmental Management Inc.

CONTRACT NUMBER W912DQ-05-D-0001 0005

ACTIVITY No.	TRANS-MITTAL No.	ITEM No.	SPEC PARAGRAPH No.	DESCRIPTION OF SUBMITTAL	TYPE OF SUBMITTAL	CLASSI-FICATION FIO GA, DA or CR	CONTRACTOR REVIEWER	CONTRACTOR SCHEDULE DATES SUBMIT NEEDED BY	APPROVAL NEEDED BY	MATERIAL NEEDED BY	CONTRACTOR ACTION CODE	CORPS RECEIVED DATE	GOVERNMENT ACTION CODE	CORPS RETURNED DATE
A3340		4	15075 Note 20	Flexible hose - shop test results	TEST REPORTS	FIO		29 Jun 11	29 Jun 11	29 Jun 11				
A3340		5	15075 Note 20	Flexible hose - manfacturers installatio	MFRS INSTR	FIO		29 Jun 11	29 Jun 11	29 Jun 11				
A2310		6	15075 Note 20	Flexible hose - field test results	TEST REPORTS	FIO		09 Aug 11	09 Aug 11	09 Aug 11				
A2310		7	15075 Note 20	Flexible hose - O&M Data		FIO		09 Aug 11	09 Aug 11	09 Aug 11				
A2310		8	15075 Note 20	Flexible hose - Warranty	CERTIFICATES	FIO		09 Aug 11	09 Aug 11	09 Aug 11				
A2310		9	15075 Note 20	Flexible hose quick connect fittings - s	SHOP DRAWINGS	DA		09 Aug 11	09 Aug 11	09 Aug 11				
A2310		10	15075 Note 20	Flexible hose quick connect fittings - m	PRODUCT DATA	DA		09 Aug 11	09 Aug 11	09 Aug 11				
SECTION - 15100			**Valves**											
A3340	2	1	15100 1.03.A	Equipment Information	PRODUCT DATA	FIO	mdl	29 Jun 11	29 Jun 11	29 Jun 11	A			
A3340	2	2	15100 1.03.A	Shop Drawings	SHOP DRAWINGS	FIO	mdl	29 Jun 11	29 Jun 11	29 Jun 11	A			
A3340		3	15100 1.03.A	Electrical Control Schematics & Wiring D	DESIGN DATA	FIO		29 Jun 11	29 Jun 11	29 Jun 11				
A3340		4	15100 1.03.B	Hydrostatic Test Data	TEST REPORTS	FIO		29 Jun 11	29 Jun 11	29 Jun 11				
A3340		5	15100 1.03.C, 2.0	Affaidavit of Compliance for each valve	CERTIFICATES	FIO		29 Jun 11	29 Jun 11	29 Jun 11				
A3340	2	6	15100 1.03.D	Manufacturer's Installation and Applicat	MFRS INSTR	FIO	mdl	29 Jun 11	29 Jun 11	29 Jun 11	A			
A2310	2	7	15100 1.03.E	O&M Data	O&M DATA	FIO	mdl	09 Aug 11	09 Aug 11	09 Aug 11	A			
A2310	2	8	15100 1.09	Valve Schedule	PRECON SUBMTL	FIO	mdl	09 Aug 11	09 Aug 11	09 Aug 11	A			
A3340	1	9	15100 1.3	Reduced Pressure Zone Backflow Preventer	SHOP DRAWINGS	FIO	mdl	29 Jun 11	29 Jun 11	29 Jun 11	A	27 Jan 11	F	04 Feb 11
A3340		10	15100 1.3	Reduced Pressure Zone Backflow Preventer	PRODUCT DATA	DA		29 Jun 11	29 Jun 11	29 Jun 11				
A2310		11	15100 1.3	Reduced Pressure Zone Backflow Preventer	TEST REPORTS	FIO		09 Aug 11	09 Aug 11	09 Aug 11				
A2310		12	15100 1.3	Reduced Pressure Zone Backflow Preventer	CERTIFICATES	FIO		09 Aug 11	09 Aug 11	09 Aug 11				
SECTION - 15120			**Piping Specialties**											
A3340		1	15120 1.03.B	Shop Drawings	SHOP DRAWINGS	DA		29 Jun 11	29 Jun 11	29 Jun 11				
A3340		2	15120 1.03.B	Product Data	PRODUCT DATA	DA		29 Jun 11	29 Jun 11	29 Jun 11				
A3340		3	15120 1.03.C	Samples	SAMPLES	DA		29 Jun 11	29 Jun 11	29 Jun 11				
A3340		4	15120 1.03.D	Design Data	DESIGN DATA	DA		29 Jun 11	29 Jun 11	29 Jun 11				
A2310		5	15120 1.03.E	Shop Test Reports	TEST REPORTS	FIO		09 Aug 11	09 Aug 11	09 Aug 11				
A2310		6	15120 1.03.E	Field Test Reports	TEST REPORTS	FIO		09 Aug 11	09 Aug 11	09 Aug 11				
A2310		7	15120 1.03.F	Welder's Certificates	CERTIFICATES	FIO		09 Aug 11	09 Aug 11	09 Aug 11				
A3340		8	15120 1.03.G	Manufacturer's Installation or Applicati	MFRS INSTR	FIO		29 Jun 11	29 Jun 11	29 Jun 11				
A3340		9	15120 1.03.H	Statement of Qualifications	PRECON SUBMTL	FIO		29 Jun 11	29 Jun 11	29 Jun 11				
A2310		10	15120 1.03.I	Manufacturer's Field Report	MFRS FLD REPT	FIO		09 Aug 11	09 Aug 11	09 Aug 11				
A2310		11	15120 1.03.J	Project Record Documents	CLOSEOUT SUBMTL	FIO		09 Aug 11	09 Aug 11	09 Aug 11				
A2310		12	15120 1.03.K	O&M Data		FIO		09 Aug 11	09 Aug 11	09 Aug 11				
A2310		13	15120 1.03.x	Warranties	CERTIFICATES	FIO		09 Aug 11	09 Aug 11	09 Aug 11				
A3340		14	15120 1.3	Potable Water Connection	SHOP DRAWINGS	DA		29 Jun 11	29 Jun 11	29 Jun 11				

RANGE : ALL

SORT : SECTION & ITEM

SUBMITTAL REGISTER (ER 415-1-10)

TITLE AND LOCATION: Rockaway Wellfield Superfund Site, EM/WS,Rockaway Borough, East Main/Wall Street, Morris County, NJ

DATE: 05 May 2011

CONTRACTOR: CAPE Environmental Management Inc.

CONTRACT NUMBER: W912DQ-05-D-0001 0005

ACTIVITY No.	TRANS-MITTAL No.	ITEM No.	SPEC PARAGRAPH No.	DESCRIPTION OF SUBMITTAL	TYPE OF SUBMITTAL	CLASSI-FICATION FIO GA, DA or CR	CONTRACTOR REVIEWER	CONTRACTOR SCHEDULE DATES SUBMIT NEEDED BY	APPROVAL NEEDED BY	MATERIAL NEEDED BY	CONTRACTOR ACTION CODE	CORPS RECEIVED DATE	GOVERNMENT ACTION CODE	CORPS RETURNED DATE
A3340		15	15120 1.3	Flow Meter and Straightener	SHOP DRAWINGS	DA		29 Jun 11	29 Jun 11	29 Jun 11				
		16	15120 1.3	Flow Meter and Straightener	SHOP DRAWINGS	DA								
A3340		17	15120 1.3	Flow Meter and Straightener	PRODUCT DATA	DA		29 Jun 11	29 Jun 11	29 Jun 11				
A3340		18	15120 1.3	Flow Meter and Straightener	DESIGN DATA	DA		29 Jun 11	29 Jun 11	29 Jun 11				
A2310		19	15120 1.3	Flow Meter and Straightener	TEST REPORTS	FIO		09 Aug 11	09 Aug 11	09 Aug 11				
A2310		20	15120 1.3	Flow Meter and Straightener	CERTIFICATES	FIO		09 Aug 11	09 Aug 11	09 Aug 11				
A3340		21	15120 1.3	Flow Meter and Straightener	MFRS INSTR	FIO		29 Jun 11	29 Jun 11	29 Jun 11				
A2310		22	15120 1.3	Flow Meter and Straightener	MFRS FLD REPT	FIO		09 Aug 11	09 Aug 11	09 Aug 11				
		23	15120 1.3	Flow Meter and Straightener		FIO								
A3340		24	15120 Detail G	Wash hose station - manufacturers info	PRODUCT DATA	DA		29 Jun 11	29 Jun 11	29 Jun 11				
A3340		25	15120 Detail G	Wash hose station - shop drawings	SHOP DRAWINGS	DA		29 Jun 11	29 Jun 11	29 Jun 11				
SECTION - 15140			**Pumps, Fueling System**											
A3340		1	15140 1.3	Pipe Hanger Supports	SHOP DRAWINGS	DA		29 Jun 11	29 Jun 11	29 Jun 11				
A3340		2	15140 1.3	Pipe Hanger Supports	PRODUCT DATA	DA		29 Jun 11	29 Jun 11	29 Jun 11				
A3340		3	15140 1.3	Pipe Hanger Supports	DESIGN DATA	DA		29 Jun 11	29 Jun 11	29 Jun 11				
A2310		4	15140 1.3	Pipe Hanger Supports	CERTIFICATES	FIO		09 Aug 11	09 Aug 11	09 Aug 11				
SECTION - 15250			**Thermal Insulation**											
A3340		1	15250 1.03.A	Product Data	PRODUCT DATA	DA		29 Jun 11	29 Jun 11	29 Jun 11				
A3340		2	15250 1.03.A	Manufacturer's Instructions for Installa	MFRS INSTR	FIO		29 Jun 11	29 Jun 11	29 Jun 11				
A2310		3	15250 1.03.C, 2.0	Manufacturer's Certifications	CERTIFICATES	FIO		09 Aug 11	09 Aug 11	09 Aug 11				
A3340		4	15250 1.03.D, 1.0	Description of Protective Packaging	PRECON SUBMTL	FIO		29 Jun 11	29 Jun 11	29 Jun 11				
SECTION - 15500			**HVAC**											
A3310		1	15500 1.03.A, 2.0	Shop Drawings	SHOP DRAWINGS	DA		06 Jul 11	06 Jul 11	06 Jul 11				
A3310	1	2	15500 1.03.A, 1.0	HVAC Product Data	PRODUCT DATA	FIO	mdl	06 Jul 11	06 Jul 11	06 Jul 11	A	08 Mar 11	F	12 Mar 11
A2310		3	15500 1.03.A.7	Certificate of Compliance	CERTIFICATES	FIO		09 Aug 11	09 Aug 11	09 Aug 11				
A2310		4	15500 1.03.A.8	Air System Test Reports	TEST REPORTS	FIO		09 Aug 11	09 Aug 11	09 Aug 11				
A2310		5	15500 1.03.A.9	O&M Data		FIO		09 Aug 11	09 Aug 11	09 Aug 11				
A2310		6	15500 1.03.A.9	Manufacturer's Instructions	MFRS INSTR	FIO		09 Aug 11	09 Aug 11	09 Aug 11				
A3310		7	15500 1.06.A	Departure From Specs/Drawings, if necces	PRECON SUBMTL	DA		06 Jul 11	06 Jul 11	06 Jul 11				
A2310		8	15500 1.08.C	Maintenance Records, if requested	PRECON SUBMTL	FIO		09 Aug 11	09 Aug 11	09 Aug 11				
A2310		9	15500 2.07, 3.03	Testing and Balancing Reports	TEST REPORTS	FIO		09 Aug 11	09 Aug 11	09 Aug 11				
SECTION - 16000			**Electrical - General Provisions**											
A3360		1	16000 1.03.A	Shop Drawings	SHOP DRAWINGS	DA		29 Jun 11	29 Jun 11	29 Jun 11				
A3360		2	16000 1.03.D	Manufacturer Information for Ground Syst	PRODUCT DATA	DA		29 Jun 11	29 Jun 11	29 Jun 11				
A3360		3	16000 1.03.E	Ground System Test Results	TEST REPORTS	FIO		29 Jun 11	29 Jun 11	29 Jun 11				

RANGE : ALL

SORT : SECTION & ITEM

SUBMITTAL REGISTER (ER 415-1-10)

TITLE AND LOCATION: Rockaway Wellfield Superfund Site, EM/WS,Rockaway Borough, East Main/Wall Street, Morris County, NJ

DATE: 05 May 2011

CONTRACTOR: CAPE Environmental Management Inc.

CONTRACT NUMBER: W912DQ-05-D-0001 0005

ACTIVITY No.	TRANS-MITTAL No.	ITEM No.	SPEC PARAGRAPH No.	DESCRIPTION OF SUBMITTAL	TYPE OF SUBMITTAL	CLASSI-FICATION FIO GA, DA or CR	CONTRACTOR REVIEWER	CONTRACTOR SCHEDULE DATES: SUBMIT NEEDED BY	APPROVAL NEEDED BY	MATERIAL NEEDED BY	CONTRACTOR ACTION: CODE	CORPS RECEIVED DATE	GOVERNMENT ACTION: CODE	CORPS RETURNED DATE
A3360		4	16000 1.09.H	Redesign Plans, if necessary	DESIGN DATA	DA		29 Jun 11	29 Jun 11	29 Jun 11				
A3360		5	16000 1.10.C	Supplemental Support Steel	SAMPLES	DA		29 Jun 11	29 Jun 11	29 Jun 11				
A2310		6	16000 1.13.A, 1.1	Record Drawings with Wiring Diagrams	CLOSEOUT SUBMTL	FIO		09 Aug 11	09 Aug 11	09 Aug 11				
A2310		7	16000 1.14 C	Warranty	CERTIFICATES	FIO		09 Aug 11	09 Aug 11	09 Aug 11				
A3360		8	16000 3.01.C	Request for Deviation, if necessary	PRECON SUBMTL	DA		29 Jun 11	29 Jun 11	29 Jun 11				
A3300	1	9	16000 n/a	Lighting Fixtures	PRODUCT DATA	FIO	mdl	01 May 11	31 May 11	31 May 11	A	28 Mar 11	F	01 Apr 11
SECTION - 16110			**Raceways, Boxes, Fittings and Supports**											
A2120	1	1	16110 1.03	PVC and RGS Conduit and Fittings	PRODUCT DATA	FIO	mdl	14 Apr 11	14 Apr 11	14 Apr 11	A	16 Mar 11	F	18 Mar 11
A3360		2	16110 1.03A	GTS Electrical - Ehrich Electric	PRODUCT DATA	FIO	mdl	30 May 11	29 Jun 11	29 Jun 11				
SECTION - 16120			**Wire and Cables (600V Maximum)**											
A3360	1	1	16120 1.03.A	GTS Wiring Products-Ehrich	PRODUCT DATA	FIO	mdl	29 Jun 11	29 Jun 11	29 Jun 11	A	29 Mar 11	F	18 Apr 11
A2310		2	16120 3.02.J.4	Printout of Strip Recorder for Fiber Opt	TEST REPORTS	FIO		09 Aug 11	09 Aug 11	09 Aug 11				
A2310		3	16120 3.06	Field Test Report	TEST REPORTS	FIO		09 Aug 11	09 Aug 11	09 Aug 11				
A2310		4	16120 1.05	Warranty	CERTIFICATES	FIO		09 Aug 11	09 Aug 11	09 Aug 11				
SECTION - 16122			**Fiberoptic Cable**											
A3360		1	16122 1.03.A	Shop Drawings	SHOP DRAWINGS	DA		29 Jun 11	29 Jun 11	29 Jun 11				
A3360		2	16122 1.03.A	Product Data	PRODUCT DATA	DA		29 Jun 11	29 Jun 11	29 Jun 11				
A3360		3	16122 1.03.A	Samples	SAMPLES	DA		29 Jun 11	29 Jun 11	29 Jun 11				
A3360		4	16122 1.03.A	Manufacturer's Instructions	MFRS INSTR	FIO		29 Jun 11	29 Jun 11	29 Jun 11				
A2310		5	16122 1.03.B	Test Reports	TEST REPORTS	FIO		09 Aug 11	09 Aug 11	09 Aug 11				
A2310		6	16122 1.03.B	O&M Manuals		FIO		09 Aug 11	09 Aug 11	09 Aug 11				
A2310		7	16122 3.02.D	Strip Recorder Printout	TEST REPORTS	FIO		09 Aug 11	09 Aug 11	09 Aug 11				
SECTION - 16141			**Wiring Devices**											
A3360	1	1	16141 2.01	Wiring Devices Product Data	PRODUCT DATA	FIO	mdl	29 Jun 11	29 Jun 11	29 Jun 11	A	29 Mar 11	F	
SECTION - 16191			**Miscellaneous Equipment**											
A3360		1	16191 1.03	Electrical Equipment Information	PRODUCT DATA	DA		29 Jun 11	29 Jun 11	29 Jun 11				
A2310		2	16191 3.02	Field Test Results	TEST REPORTS	FIO		09 Aug 11	09 Aug 11	09 Aug 11				
SECTION - 16470			**Panelboards**											
A3300		1	16470 1.02	Shop Drawings	SHOP DRAWINGS	DA		31 May 11	31 May 11	31 May 11				
A3300		2	16470 1.02	Panelboards and Accessories	PRODUCT DATA	FIO	mdl	31 May 11	31 May 11	31 May 11				
SECTION - 16482			**Variable Frequency Drive Controllers**											
A3300		1	16482 1.03	Shop Drawings	SHOP DRAWINGS	DA		31 May 11	31 May 11	31 May 11				
A3300		2	16482 1.03	Product Data	PRODUCT DATA	DA		31 May 11	31 May 11	31 May 11				
A2310		3	16482 1.03	Field Test Reports	TEST REPORTS	FIO		09 Aug 11	09 Aug 11	09 Aug 11				
A2310		4	16482 1.03	Inspection Reports	TEST REPORTS	FIO		09 Aug 11	09 Aug 11	09 Aug 11				

RANGE : ALL

SORT : SECTION & ITEM

SUBMITTAL REGISTER (ER 415-1-10)

TITLE AND LOCATION: Rockaway Wellfield Superfund Site, EM/WS,Rockaway Borough, East Main/Wall Street, Morris County, NJ

DATE: 05 May 2011

CONTRACTOR: CAPE Environmental Management Inc.

CONTRACT NUMBER: W912DQ-05-D-0001 0005

ACTIVITY No.	TRANS-MITTAL No.	ITEM No.	SPEC PARAGRAPH No.	DESCRIPTION OF SUBMITTAL	TYPE OF SUBMITTAL	CLASSI-FICATION FIO GA, DA or CR	CONTRACTOR REVIEWER	CONTRACTOR SCHEDULE DATES: SUBMIT NEEDED BY	APPROVAL NEEDED BY	MATERIAL NEEDED BY	CONTRACTOR ACTION: CODE	CORPS RECEIVED DATE	GOVERNMENT ACTION: CODE	CORPS RETURNED DATE
SECTION - 16502			**Lightning Protection System**											
A2430		1	16502 1.01.B	Shop Drawing	SHOP DRAWINGS	DA		22 Jul 11	22 Jul 11	22 Jul 11				
A2430	1	2	16502 1.01.B	Lightning Protection Materials	PRODUCT DATA	FIO	mdl	22 Jul 11	22 Jul 11	22 Jul 11	A	23 Mar 11	F	01 Apr 11
A2310		3	16502 1.01.C	UL Field Inspection Results	TEST REPORTS	FIO		09 Aug 11	09 Aug 11	09 Aug 11				
A2430		4	16502 1.01.D	Alternate Methods of Lightning Protectio	PRECON SUBMTL	DA		22 Jul 11	22 Jul 11	22 Jul 11				
SECTION - 16600			**Underground System**											
A2430		1	16600 1.03.A	Shop Drawings	SHOP DRAWINGS	DA		22 Jul 11	22 Jul 11	22 Jul 11				
A2430		2	16600 1.03.A	Product Data	PRODUCT DATA	DA		22 Jul 11	22 Jul 11	22 Jul 11				
A2430		3	16600 1.03.A	Buoyancy Calculations if required	DESIGN DATA	DA		22 Jul 11	22 Jul 11	22 Jul 11				
SECTION - 16660			**Grounding System**											
A2430		1	16660 1.02 B	Shop Drawings	SHOP DRAWINGS	DA		22 Jul 11	22 Jul 11	22 Jul 11				
A2120	1	2	16660 1.02 B	U/G Warning Tape	PRODUCT DATA	FIO	mdl	14 Apr 11	14 Apr 11	14 Apr 11	A	22 Mar 11	F	
A2310		3	16660 1.02.B, 3.0	Test Results - Grounding and Bonding Res	TEST REPORTS	FIO		09 Aug 11	09 Aug 11	09 Aug 11				
A2430	2	4	16660 2.01A-G	Grounding System Product Data	PRODUCT DATA	FIO	mdl	22 Jun 11	22 Jul 11	22 Jul 11	A	28 Mar 11	F	01 Apr 11
SECTION - 16720			**Integrated Fies & Security Alarm Panel**											
F1000		1	16720 1.03.A.1	Shop Drawings	SHOP DRAWINGS	DA		31 May 11	31 May 11	31 May 11				
F1000		2	16720 1.03.A.2	Product Data	PRODUCT DATA	DA		31 May 11	31 May 11	31 May 11				
F1000		3	16720 1.03.A.3	Wiring Diagrams	DESIGN DATA	DA		31 May 11	31 May 11	31 May 11				
F1000		4	16720 1.03.A.4	Manufacturer's Instructions	MFRS INSTR	FIO		31 May 11	31 May 11	31 May 11				
A2300		5	16720 1.03.B.1	Test Reports	TEST REPORTS	FIO		09 Aug 11	09 Aug 11	09 Aug 11				
A2310		6	16720 1.03.B.2	O&M Manuals		FIO		09 Aug 11	09 Aug 11	09 Aug 11				
A2310		7	16720 1.03.B.3	Training Materials		FIO		09 Aug 11	09 Aug 11	09 Aug 11				
A2310		8	16720 1.03.B.4	Spare Parts List		FIO		09 Aug 11	09 Aug 11	09 Aug 11				
A2310		9	16720 1.03.B.6	Record Documents	CLOSEOUT SUBMTL	FIO		09 Aug 11	09 Aug 11	09 Aug 11				
A2310		10	16720 3.01.C	Test Report Certificate	CERTIFICATES	FIO		09 Aug 11	09 Aug 11	09 Aug 11				

RANGE : ALL

SORT : SECTION & ITEM

APPENDIX D

ENG FORM 4025

TRANSMITTAL OF SHOP DRAWINGS, EQUIPMENT DATA, MATERIAL SAMPLES, OR MANUFACTURER'S CERTIFICATES OF COMPLIANCE

(Read instructions on the reverse side prior to initiating this form)

DATE: 12/3/2007

TRANSMITTAL NO.: 01203-50

SECTION I - REQUEST FOR APPROVAL OF THE FOLLOWING ITEMS

(This section will be initiated by the contractor)

TO: Environmental Residency
US Army Corps of Engineers
214 State Highway 18
East Brunswick, NJ 08816

FROM: CAPE Environmental Management Inc.
180 Gordon Drive, Suite 105
Exton, PA 19341

CONTRACT NO.: W912DQ-05-D-0001 0005

CHECK ONE:
[X] THIS IS A NEW TRANSMITTAL
[ ] THIS IS A RESUBMITTAL OF TRANSMITTAL _____

SPECIFICATION SEC. NO. (Cover only one section with each transmittal): 01203

PROJECT TITLE AND LOCATION: 01-Main Register
Rockaway Wellfield Superfund Site, EM/WS Rockaway Borough, East Main/Wall Street, Morris County, NJ

CHECK ONE: THIS TRANSMITTAL IS
[ ] FOR [ ] FIO [X] GA [ ] DA [ ] CR

ITEM NO. a.	DESCRIPTION OF ITEM SUBMITTED (Type size, model number/etc.) b.	MFG OR CONTR. CAT., CURVE DRAWING OR BROCHURE NO. (See instruction no. 8) c.	NO. OF COPIES d.	CONTRACT REFERENCE DOCUMENT SPEC. PARA. NO. e.	CONTRACT REFERENCE DOCUMENT DRAWING SHEET NO. f.	FOR CONTRACTOR USE CODE g.	VARIATION (See Instruction No. 6) h.	FOR CE USE CODE i.
64	CAPE Certified Payroll 28	CERTIFICATES	2			A	N	F

REMARKS

Two copies provided to Mr. Michael Johnson at the following address:
USACE
9a Wall Street
Rockaway, NJ 07866

One Copy retained for CAPE Project File.

I certify that the above submitted items have been reviewed in detail and are correct and in the strict conformance with the contract drawings and specifications except as otherwise stated.

_____

NAME AND SIGNATURE OF CONTRACTOR

SECTION II - APPROVAL ACTION

ENCLOSURES RETURNED (List by item No.)

NAME, TITLE AND SIGNATURE OF APPROVING AUTHORITY

DATE

START-UP PLAN

FOR

GROUNDWATER TREATMENT FACILITY
ROCKAWAY BOROUGH EAST MAIN/WALL STREET PLUME – OU2
SUPERFUND SITE
MORRIS COUNTY, NEW JERSEY

Contract Number W912DQ-05-D-0001
Task Order No. 0005

CAPE Project No. 50001.005

Prepared for:

DEPARTMENT OF THE ARMY
KANSAS CITY DISTRICT
CORPS OF ENGINEERS
757 Federal Building, 601 East 12th Street, Room 410
Kansas City, Missouri 64106-2896

Prepared by:

180 Gordon Drive, Suite 102
Exton, Pennsylvania 19341-1340

AUGUST 2011

TABLE OF CONTENTS

LIST OF ABBREVIATIONS AND ACRONYMS iv

1.0 GENERAL INFORMATION 1

1.1 INTRODUCTION 1

1.2 SYSTEM DESCRIPTION 1

1.2.1 Groundwater Collection System 1

1.2.2 Treatment System 2

1.2.3 Effluent System 2

1.2.4 Sump System 2

2.0 TESTING LAYOUT AND DESCRIPTION 3

2.1 FUNCTIONALITY TESTS 3

2.1.1 VPGAC 3

2.1.2 Air Stripper 3

2.1.3 Air Stripper and VPGAC 4

2.1.4 Air Stripper, VPGAC, Bag Filter, and Sump 4

2.1.5 Extraction Wells 4

2.1.6 Control Testing 6

2.1.7 Sequences and Alarms 6

2.2 14-DAY OPERATIONAL TEST 6

2.3 48-HOUR PERFORMANCE TEST 8

3.0 START-UP PROCEDURES 10

4.0 OPERATING PROCEDURES 11

4.1 CONTROLS AND INDICATORS 11

5.0 SHUTDOWN PROCEDURES 14

5.1 OPERATION SHUT DOWN 14

5.2 EMERGENCY SHUTDOWN PROCEDURES 14

6.0 PARTIAL SYSTEM SHUTDOWN PROCEDURES 15

7.0 SAFETY PROCEDURES 16

7.1 GENERAL SAFETY 16

7.2 PRESSURIZED EQUIPMENT AND SYSTEMS 16

7.3 ELECTRICAL EQUIPMENT AND LOCKOUT/TAGOUT 17

7.4 LADDER SAFETY 17

7.5 ELEVATED WORK LOCATIONS AND FALL PROTECTION 18

8.0 EMERGENCY PROCEDURES AND EMERGENCY CONTACT LIST 19

8.1 EMERGENCY CONTACT LIST 19

8.2 EMERGENCY HOSPITAL ROUTE 20

9.0 LABORATORY TESTING REQUIREMENTS 21

9.1 SAMPLING REQUIREMENTS AND FREQUENCY 21

9.2 LABORATORY INFORMATION 21

9.3 PHYSICAL PARAMETER MEASUREMENTS 21

9.3.1 Water Quality Parameters 21

9.3.2 Water Level Measurements 22

9.4 SAMPLE NUMBERING 22

9.4.1 Sample Numbering System 22

10.0 RECORD KEEPING REQUIREMENTS 24

10.1 OPERATOR LOGS 24

TABLES

TABLE 1.1 NJDEP PERMIT EQUIVALENCY
TABLE 1.2 NJDEP AIR POLLUTION CONTROL PERMIT EQUIVALENCY
TABLE 1.3 EXTRACTION WELL PUMPING RATES
TABLE 2.1 SYSTEM ALARMS
TABLE 2.2 14-DAY STARTUP SCHEDULE
TABLE 2.3 48-HOUR PERFORMANCE TEST SCHEDULE
TABLE 3.1 VALVE ALIGNMENT
TABLE 9.1 SAMPLE CONTAINERS FOR STARTUP TESTING

ATTACHMENTS

ATTACHMENT 1 FUNCTIONALITY TESTING FORMS
ATTACHMENT 2 STARTUP TESTING CHECKLISTS
ATTACHMENT 3 14-DAY OPERATIONAL TESTING FORMS
ATTACHMENT 4 48-HOUR PERFORMANCE TESTING FORMS

LIST OF ABBREVIATIONS AND ACRONYMS

CAPE	CAPE Inc
EW	extraction well
gpm	gallons per minute
GWTF	Groundwater Treatment Facility
HAPs	hazardous air pollutants
NJDPES	New Jersey Discharge Pollutant Elimination System
PCE	tetrachloroethylene
PID	photoionization detector
PLC	programmable logic controller
RB EM/WS	Rockaway Borough East Main/Wall Street
SCADA	supervisory control and data acquisition
VFD	variable frequency drive
VOC	volatile organic contaminants
VPGAC	vapor phase granular activated carbon

1.0 GENERAL INFORMATION

This Start-up Plan has been prepared for the Groundwater Treatment Facility (GWTF) at the Rockaway Borough East Main/Wall Street Plume (RB EM/WS) Superfund site in Morris County, New Jersey. This plan provides the instructions necessary to start-up the treatment plant and to perform the 14-day operational and 48-hour performance testing.

1.1 Introduction

Start-up testing must be conducted on the GWTF to identify the operating and performance capabilities of the designed system. This testing is implemented in three phases: equipment functionality, 14-day operational testing, and 48-hour performance testing. The equipment functionality testing is designed to ensure each portion of the treatment system functions correctly prior to the treatment system running as a whole. The 14-day operational test is designed to test the treatment system with each extraction well individually and then test the system as a whole. At the end of the 14-day operational test, the optimum performance criteria will be established for the GWTF. The following list provides key activities and/or approvals that must be obtained before proceeding with the next phase of testing under this startup plan:

- All mechanical problems noted during each functionality test must be fixed prior to the next functionality test. After all functionality tests, all mechanical problems noted during the 14-day test will be fixed, prior to 48-hour performance test.
- CAPE Inc (CAPE) must receive written notification from the Contracting Officer that 14-day operational test is successfully completed before proceeding to 48-hour performance test
- CAPE must receive written notification from the Contracting Officer that 48-hour performance test is successfully completed before proceeding to full operation of the treatment system.

Following identification of the performance criteria (i.e., optimum extraction flow rates), the 48-hour performance test will be initiated to verify system reproducibility at the optimum performance criteria.

1.2 System Description

The following sections describe the various components that comprise the treatment system at the GWTF. Each component and system will be tested during startup testing to ensure proper function and performance.

1.2.1 Groundwater Collection System

The groundwater collection system is comprised of five extraction wells (EW-5A, EW-6, EW-8, EW-9, and EW-10). The wells are designed to collect and transfer tetrachloroethylene (PCE)-impacted groundwater to the GWTF using submersible centrifugal pumps (EWP-100, EWP-200, EWP-300, EWP-700, and EWP-800). Drawdown induced during pumping is monitored using dedicated transmitters (LT-100,

LT-200, LT-300, LT-700, and LT-800) to avoid pumping the well dry and to prevent damage to the pump. The anticipated pumping rate ranges for the respective wells are provided in Table 1.3. These flow rates are based on step drawdown testing conducted during well development and installation.

1.2.2 Treatment System

The treatment system is comprised of a combination of particle filtration and air stripping. Particle filtration is achieved using a bag filter (BF-400) having a pore size of 25 microns to reduce particulates in groundwater prior to flowing through the air stripper. The groundwater is then treated using an air stripper (AST-400) equipped with a 40 HP blower (BLR-400) and an in-line duct heater. The air stripper is capable of treating a process flow rate of 210 gpm. Vapor from the air stripper is treated prior to discharge through a vapor phase granular activated carbon system (VPGAC) consisting of two 3,000 pound vapor phase carbon adsorption units: GAC-401 and GAC-402. The VPGAC system is designed to remove greater than 95% of all volatile organic contaminants from the air stripper off gas prior to discharge through the exhaust stack. The two adsorbers are operated in a lead-lag arrangement ensuring that vapor discharged from the system meets the permit equivalency summarized in Table 1.2. When breakthrough is discovered in the lead adsorber, the interconnecting valve tree will be configured so that the lag vessel becomes the lead vessel. Once complete, the operator will request carbon replacement from the carbon supplier for the adsorber where breakthrough has occurred.

1.2.3 Effluent System

Water discharged from the air stripper is discharged to the Rockaway River via an existing storm sewer connection. At the discharge point from the treatment system piping to the storm sewer system, the catch basin has been fitted with a level switch high designed to alert the programmable logic controller (PLC) of potential flow / flooding concerns.

1.2.4 Sump System

The sump system is composed of a trench and sump collection system. A submersible pump (PMP-500) will be used to transfer water collected by the trench and sump system through the air stripper for treatment. Any condensate water from the VPGACs and VPGAC air piping will also be sent to the sump system and run through the air stripper for treatment. PMP-500 has an integral float to trigger on/off operations. A pumping running contact is wired to the control system to indicate pump operation. Once the timer is exceeded, an alarm will be generated and the plant will be shut down for operator inspection. In addition, the sump is equipped with a high level alarm that will also shutdown the plant.

2.0 TESTING LAYOUT AND DESCRIPTION

Prior to any startup testing, all utility connections to the system should be verified to be properly connected and functional.

2.1 Functionality Tests

Equipment will be tested by the manufacturer when installed at the GWTF. Functionality tests conducted at the beginning of the startup sequence will verify that each portion of the treatment system will function properly separately. As each piece of equipment is found to be functional, another component of the GWTF will be tested, until all of the treatment system components have been tested. Extraction well functionality tests are to test submersible pumps functionality. Extraction wells will not be connected to the treatment system until the 14 day operational test begins. A potable water connection will be used to test treatment system functionality. For the extraction wells, extracted water will be collected in a frac tank and then treated in a portable temporary treatment system.

2.1.1 VPGAC

Both lead and lag configurations must be tested for functionality. All data collected should be included in the Functionality Testing Forms, included as Attachment 1. Refer to Table 3.1 for the proper valve alignment for the first VPGAC configuration. To test this lead lag configuration, turn the blower on at the air stripper so clean air is sent to the VPGACs. Then, startup the in-line duct heater so air can now flow from the blower, through the heater and to the VPGACs. Allow blower to operate for 1 hour, then check and record readings for pressure, flow rates, and temperature. After measurements are collected, shut off the heater and air stripper so air will stop flowing to the VPGACs, then close valves so all are in the system off position per Table 3.1. To test the second configuration, align the associated valves at the VPGACs to achieve the desired configuration; refer to Table 3.1 for valve alignment. Startup the blower and the heater as described above. Check and record readings for pressure, flow rate, and temperature. Turn off the blower and align all valves into the system off position.

2.1.2 Air Stripper

The air stripper functionality test will be conducted with potable water, so water can be directly discharged to the municipal storm sewer. Additionally, because potable water will be used, any vapor from the air stripper can be directly discharged without VPGAC treatment. All data collected should be included in the Functionality Testing Forms, included as Attachment 1. Refer to Table 3.1 for the proper valve alignment to startup only the air stripper. Startup the air stripper and blower, then connect potable water to the air stripper. Allow air stripper to operate for 1 hour, then check and record readings for pressure and flow rates. Also confirm that the air stripper water discharge is functioning properly and ensure that there is no back pressure. Turn off the potable water, turn off the blower and the air stripper, and align all valves into the system off position.

2.1.3 Air Stripper and VPGAC

The air stripper and VPGAC functionality test will be conducted with potable water and clean air, so water can be directly discharged to the municipal storm sewer and vapor can be directly discharged from the VPGACs without vapor monitoring. All data collected should be included in the Functionality Testing Forms, included as Attachment 1_. Refer to Table 3.1 for the proper valve alignment to startup the air stripper and the VPGACs, in both VPGAC lead and lag configurations. Align valves per the valve alignment table for VPGAC configuration one, then startup the blower, the in-line heater, and the air stripper. Connect potable water to the air stripper. Verify that the air stripper discharge, the VPGAC water discharge, and the VPGAC vapor discharge are properly functioning. Allow system to operate for 1 hour, then check and record readings for pressure, flow and temperature. Once data is collected, shut off the potable water, and shut off the blower, air stripper, and in-line heater. Align all valves into the system off position. Next, align valves in the second VPGAC configuration and follow the steps described above. Check and record readings for pressure, flow and temperature. Once data is collected, shut off the potable water and shut off equipment as described above. Align all valves into the system off position.

2.1.4 Air Stripper, VPGAC, Bag Filter, and Sump

This functionality test will be conducted with potable water and clean air, so water can be directly discharged to the municipal storm sewer and vapor can be directly discharged from the VPGACs without vapor monitoring. All data collected should be included in the Functionality Testing Forms, included as Attachment 1. Refer to Table 3.1 for the proper valve alignment to startup the air stripper, the VPGACs (both configurations will be tested), the bag filter, and the sump. Align valves per the valve alignment table for VPGAC configuration one, next startup the blower, the in-line heater, the air stripper, and the sump. Connect potable water to the system, before the bag filter, so the potable water will flow through the treatment system. Check and record readings for differential pressure, pressure, flow, and temperature. Verify that the air stripper discharge, the VPGAC discharge, and the sump are functioning properly. Once data is collected, shut off the potable water connection, so water will no longer flow. Then shut off the blower, air stripper, in-line heater, and close valves so the system is in off position. Align valves in the second VPGAC configuration and follow the steps described above. Allow the system to operate for 1 hour, then check and record readings for differential pressure, pressure, flow, and temperature. Once data is collected, shut off the potable water and shut off equipment as described above. Align all valves into the system off position. The sump will also be tested during the 14-day operational testing by filling the trench with treated water. Once the pump is activated, the operator will monitor the system to ensure that the control system has stopped the well pumping cycle and has initiated the sump pumping cycle. This test will occur during a period of convenience for the operator to ensure the 14-day test is not hindered.

2.1.5 Extraction Wells

A functionality test will be performed for each extraction well. The purpose of these functionality tests are to ensure the submersible pumps will properly function when the

wells are pressurized to the anticipated operating pressure. During each functionality test, the water pumped from the wells will be observed to ensure each well was properly developed, so sediment will not be carried to the treatment system when the 14 day operation testing begins. During each extraction well functionality test, extracted water will be containerized in a frac tank. Water from the frac tank will then be pumped and treated through a portable treatment system prior to discharging. An effluent water sample will be collected from the portable treatment system prior to discharge of the treated water. The duration of each extraction well functionality test will be a minimum of 8 hours.

2.1.5.1 **EW-5A:** EW-5A has the lowest anticipated pumping rate range for the extraction wells at 20 to 50 gpm. Connect the frac tank to the well piping and turn on the submersible pump. Restrict the well discharge so that the pressure is at the anticipated operating pressure. Check and record readings for pressure, water level, and flow. Once readings have been collected, shut off the submersible pump and disconnect the frac tank.

2.1.5.2 **EW-9:** EW-9 has an anticipated pumping rate range from 20 to 60 gpm. Connect the frac tank to the well piping and turn on the submersible pump. Restrict the well discharge so that the pressure is at the anticipated operating pressure. Check and record readings for pressure, water level, and flow. Once readings have been collected, shut off the submersible pump and disconnect the frac tank.

2.1.5.3 **EW-8:** EW-8 has an anticipated pumping rate range from 20 to 60 gpm. Connect the frac tank to the well piping and turn on the submersible pump. Restrict the well discharge so that the pressure is at the anticipated operating pressure. Check and record readings for pressure, water level, and flow. Once readings have been collected, shut off the submersible pump and disconnect the frac tank.

2.1.5.4 **EW-10:** EW-10 has an anticipated pumping rate range from 40 to 100 gpm. Connect the frac tank to the well piping and turn on the submersible pump. Restrict the well discharge so that the pressure is at the anticipated operating pressure. Check and record readings for pressure, water level, and flow. Once readings have been collected, shut off the submersible pump and disconnect the frac tank.

2.1.5.5 **EW-6:** EW-6 has an anticipated pumping rate range from 40 to 100 gpm. Connect the frac tank to the well piping and turn on the submersible pump. Restrict the well discharge so that the pressure is at the anticipated operating pressure. Check and record readings for pressure, water level, and flow. Once readings have been collected, shut off the submersible pump and disconnect the frac tank.

2.1.6 Control Testing

Following the raw functionality testing, perform a test of the control loops for the air stripper blower (Control Loop 400) and the Process (Control Loop 999). Use the Control Loop Test Forms included in Attachment 1. In addition, I/O calibration checks will be performed for all analog and I/O elements, including:

- Flow Indicator FI-400
- Solenoid Status HS-400
- Sump Status
- Bag Filter Differential Pressure
- Air Stripper Blower Status
- Air Stripper Pressure
- Blower Line Pressure
- Blower Line Flow
- Vent Heater Status
- Vent Heater Temperature
- Treated Water Discharge Flow.

Document the I/O calibration checks using the I/O Module Calibration Check and Sign Off form included in Attachment 1. These two loops comprise the groundwater treatment system control. After these loops are tested and the calibration checks are complete, perform loop tests for each of the extraction wells, Loop 100, Loop 200, Loop 300, Loop 700, and Loop 800. Also, complete the Calibration Check and Sign Off forms for each extraction well's associated flow indicator and level indicator.

2.1.7 Sequences and Alarms

The following sequences will be verified and documented using the I/O Calibration Check Sign Off form:

- Sequence 01: Shutdown All Extraction Well Pumps

- Sequence 02: Shutdown All Extraction Well Pumps, Sump Pump, Disable Air Stripper Blower and Heater

- Sequence 03: Shutdown Individual Extraction Well Pumps.

In addition, Table 2.1 Lists all alarms associated with the control system. Each alarm and its control function shall be verified and documented on an I/O Calibration Check Sign Off form.

2.2 <u>14-Day Operational Test</u>

After each functionality test is conducted and all tests are approved, the 14-day operational test can begin. During this testing period, various flow scenarios will be tested to assure that all anticipated system states and configurations will perform to meet or exceed the expected and acceptable standards. Samples and field parameter readings will be collected for the influent and effluent from each well and starting on Day 1. Table

2.2, 14-Day Startup Schedule, provides a summary of the 14-day operational test. Additionally, 14-Day Operational Checklists 14-Day Operation Data Form is included in Attachment 2 and Attachment 3, respectively. Once the entire system is online monitoring and sample collection for vapor emissions will begin. Initial design flow rates were identified during step drawdown testing of the extraction wells following installation. These design flow rates will be used to initially operate the system. The following list summarizes the proposed activities of the 14-day operational test:

PERFORMANCE TESTING

The following flow scenarios will be tested during the 14-day test:

Day 1 through Day 6 – Run Scenario 1 summarized in the table, below.

Day 7 through Day 14 – Run subsequent flow scenarios summarized in the table, below. Run the five below plus 2 others, designed in the field based on the results of scenarios 1 through 5. Each scenario should be run approximately 24 hours. If system shuts down during the 24 hour period, a decision should be made in the field whether to start test again or move to next flow scenario (based on whether groundwater levels have stabilized). The sump pump should be tested once per scenario and also if possible simulate clogged bag filters.

Collect manual water level measurements one round per hour for first 6-8 hours (first day), then collect 2 rounds one hour apart the next morning before switching to next flow scenario.

Scenario 1	Scenario 2	Scenario 3	Scenario 4	Scenario 5
EW-5A: 20 gpm	EW-5A: 20 gpm	EW-5A: 20 gpm	EW-5A: 50 gpm	EW-5A: 0 gpm
EW-8: 20 gpm	EW-8: 20 gpm	EW-8: 0 gpm	EW-8: 60 gpm	EW-8: 20 gpm
EW-9: 20 gpm	EW-9: 20 gpm	EW-9: 25 gpm	EW-9: 60 gpm	EW-9: 0 gpm
EW-6: 75 gpm	EW-6: 95 gpm	EW-6: 55 gpm	EW-6: 40 gpm	EW-6: 95 gpm
EW-10: 75 gpm	EW-10: 0 gpm	EW-10: 55 gpm	EW-10: 0 gpm	EW-10: 95 gpm
Total: 210 gpm	Total: 155 gpm	Total: 155 gpm	Total: 210 gpm	Total: 210 gpm

- Individual well flow rates will be determined during the 14-Day Performance Testing activities
- Test GWTF at design flow rate of 210 gpm. This rate may be adjusted pending the testing of the individual well systems and the resulting drawdown in each respective well. Well flow rates may be adjusted further to ensure wells are not

pumped dry during the extended performance testing phase of the 14-day operational test.

- Collect groundwater Influent Sample (one for the week)
- Collect Water Effluent Sample (one for the week, including Chronic Toxicity)
- Collect field parameters for groundwater extracted from the extraction wells
- Collect field parameters for Water Effluent
- Collect water level measurements for wells in vicinity of the treatment plant
- Monitor level control range for the GWTF wells and adjust individual well flow rates to prevent pumping the well dry
- Collect vapor flow rate through VPGACs (daily)
- Collect PID readings at the VPGACs influent and emissions sample ports (daily)
- Collect operating VOC control efficiency via canister sampling prior to the VPGAC and at the stack at the frequency described in Note (4) of Table 2.2
- Conduct process sampling after the bag filter.

All samples collected during the 14-day operational tests will be analyzed for quick turnaround analysis (i.e., 24-hour results). These results will provide a data set to support compliance with the New Jersey Discharge Pollutant Elimination System (NJDPES) discharge permit requirements. Additionally, PID readings for Total VOCs, HAPs, and PCE will be collected daily for instantaneous results to support compliance with the New Jersey Department of Environmental Protection Air Pollution Control Preconstruction Permit and Certificate to Operate. Sampling methodology, analytical requirements, and sample numbering is covered in Section 9.0.

At the end of the 14-day operational test, the operating parameters of the plant will be verified. These parameters will then be used to program the system for the 48-hour performance test.

2.3 48-hour Performance Test

The 48-hour performance test will be used to verify that the plant design parameters that were fine tuned during the 14-day operational testing. Table 2.3 provides a summary of the 48-hour performance test schedule. Additionally, 48 Hour Performance Test Checklists and 48 Hour Performance Test Data Forms are included in Attachment 2 and Attachment 4, respectively. This test will ensure the surrounding groundwater can be pumped for at least 24-hours without overpumping the system dry. The following list provides the daily details for the 48-hour performance test:

DAY 1

- Test the GWTF anticipated design flow, 210 gpm or modified design flow per 14-day operational testing data
- Collect groundwater Influent Samples from extraction well ports (EW-5A, EW-6, EW-8, EW-9, and EW-10) and the common influent port
- Collect Lead GAC and water Effluent Samples, chronic toxicity to be excluded
- Collect field parameters for groundwater Influent from individual well sampling ports and the common plant influent sampling port.
- Collect field parameters for Effluent
- Collect water level measurements for wells in vicinity of the treatment plant
- Collect vapor flow rate through VPGACs (daily)
- Collect total VOCs, HAPs, and PCE readings via PID at the VPGACs emissions (daily)
- Collect operating VOC control efficiency via PID prior to the VPGAC and at the stack (once a week).

DAY 2

- Test the GWTF anticipated design flow, 210 gpm or modified design flow per 14-day operational testing data. Monitor well levels and identify any loss in performance over the testing period
- Collect groundwater Influent Samples from extraction well ports (EW-5A, EW-6, EW-8, EW-9, and EW-10) and the common influent port
- Collect Lead GAC and water Effluent Samples, chronic toxicity to be excluded
- Collect field parameters for Influent from individual well sampling ports and the common plant influent sampling port
- Collect field parameters for Effluent
- Collect water level measurements for wells in vicinity of the treatment plant
- Collect vapor flow rate through VPGACs (daily)
- Collect total VOCs, HAPs, and PCE readings via PID at the VPGACs effluent (daily).

3.0 START-UP PROCEDURES

This section covers the procedures necessary to start the process from off through system standby prior to full operation. The following series of steps shall be taken in order to prevent injury to personnel or damage to equipment:

1. Review Table 3.1, Valve Alignment, to ensure that process valves are in the correct position. Keep in mind that the system is configured so that each vessel can serve as the lead vessel. On Table 3.1, there is a valve alignment for each VPGAC configuration (lead-lag). The valve alignment sheet is configured for multiple operations, so double check the valve sequence on the table and on the process lines before proceeding.

2. Once valve alignment has been verified, the operator shall proceed to the motor control center and in the following sequences, start the air stripper and the well pumps.

3. The operator shall turn the Off-Auto (OA) switch to the AUTO position for the air stripper and each well pump (EW-5A, EW-9, EW-8, EW-10, and EW-6) in that order).

    a. Note: Prior to starting the extraction well pumps, the heater permissive shall turn on, the blower must be running for at least one minute, the sump pump enable shall turn on, and the solenoid valve (FC-400/BU-406) must be open.

4. At this point the system is in Standby Mode and awaiting initiation by the control system.

4.0 OPERATING PROCEDURES

This section describes the procedures to start plant operations from the Standby Mode. The following steps should be taken in order:

1. Check Air Stripper's flow indicator, the VPGAC differential pressure, and the VPGAC's flow indicator.

2. Verify and document the that all valves are in the correct position prior to operation.

3. Assure that the bag filter is secure.

4. At the Operator-Interface Terminal (OIT), the operator shall initiate the pump start sequence in the following order: EW-5A, EW-9, EW-8, EW-10, and EW-6.

5. The operator shall review the plant flow rate as indicated by FE/FIT-400.

6. The operator shall verify the flow and pressure indications for each influent leg of the influent header and document the respective pressures on a log sheet. The flow indicators are FI-100, FI-200, FI-300, FI-700, and FI-800. The pressure indicators are PI-100, PI-200, PI-300, PI-700, and PI-800.

7. The operator shall also verify the differential pressure across the bag filter (BF-400) and the carbon filters (determined from the difference between GAC-401 and GAC-402). A high differential pressure (greater than ___ inches water) indicated by BF-400 would signify the potential need for bag filter changeout. A greater than 2 psi difference between GAC-401 and GAC-402 may indicate a problem with vapor flow through the carbon filters.

8. The operator shall also verify the set points for the pressure switches located upstream of the VPGAC. This pressure switch is used to prevent damaging the VPGAC vessels.

4.1 <u>Controls and Indicators</u>

The GWTF operates fully automatically to maintain a target draw-down aquifer level condition at the five extraction wells. Process logic is executed by the supervisory control and data acquisition (SCADA) PLC system, with both local monitoring and control via touch-screen Operator Interface Terminal (OIT) and remote monitoring and control (via modem connection) capabilities. The OIT allows touch-screen operator input and displays system operational status and alarm conditions. SCADA access through the OIT (or external modem) is password protected for various user authorization groups. Various screen selections allow the operator to "dig down" for operational, status and historic data information. Operational data, historic trending and alarm history are maintained through the SCADA PLC system. An associated software Auto-Dialer provides external communication of all alarm conditions.

Analog input signals from each of the five extraction wells pressure transmitters (input signal configured to represent equivalent flow rates) support PLC output to the associated well pump motor variable frequency drives (VFDs). The VFDs are adjusted individually

by the PLC to maintain set point flow rate at the subject well. Software programming logic buffers VFD adjustment to prevent overcorrection. A high aquifer water level (LH-adjustable set point) triggers a well-specific notification alarm ("Inadequate Drawdown in Well EW-XX"). A low aquifer water level (LL-adjustable set point) triggers a well-specific critical alarm ("Excessive Drawdown in Well EW-XX"), shutting down the affected well pump until operator-initiated restart. Well pump motors are protected by the VFDs, with protective shutdowns monitored and reported by the SCADA ("EW-XX Motor Run Failure"). Flow from each well is routed to a pipe assembly header inside the GWTF building where the extracted groundwater is combined. Pressure indicators, mechanical flow meters and valves allow flow monitoring and minor balancing. Inflow combines to a single line downstream of the pipe assembly.

The combined plant flow is measured by a flow meter (mag meter). The PLC maintains flow within target range (155 gpm min, 210 gpm max) and to record flow rate trending and cumulative flow volumes. A low flow condition (FL-adjustable set point, 150 gpm initial) triggers a notification alarm ("Low Treatment System Flow"). A high flow condition (FH-adjustable set point, 215 gpm initial) triggers a critical alarm ("High Treatment System Flow – System Shutdown"), shutting down the GWTF until operator-initiated restart. In addition, interlock I-23 will alarm when the sum of flows from the wells, as indicated by the individual well flow transmitters, is more than 10% different from the combined influent flow indicated by flow transmitter FIT-400.

Influent pressure at VPGAC is closely monitored by the high pressure switch. The high pressure switch shall have a set point of 4 psig. The set point for the high pressure switch may be adjusted based on process conditions encountered during the startup testing. A high pressure condition (PSH – adjustable) triggers a critical alarm ("VPGAC High Pressure – System Shutdown"), shutting down the GWTF until operator-initiated restart.

A floor trench drain and sump collect any leakage from the GWTF process equipment. An associated sump pump (with self-contained ON-OFF level switch) returns captured water to the process train for treatment. The SCADA monitors the sump pump running signal as indicated by the sump pump's starter contactor, temporarily interrupting process flow from the well pumps during sump pump operations to ensure low system backpressure. The PLC will monitor the sump pump running time. If the sump pump runs for 15 minutes, an alarm will be generated and the plant will be shut down for operator inspection. A high level switch (LSH-fixed) monitors for high water condition at the sump. A high water level condition triggers a critical alarm ("Sump High Water Level – System Shutdown"), shutting down the GWTF until operator-initiated restart.

Treated water is discharged to a storm water inlet basin near the GWTF building. A high level switch (LSH-fixed) at the basin monitors for high storm water levels in the storm inlet basin. A high water level condition triggers a critical alarm ("Storm Inlet High Water Level – System Shutdown"), shutting down the GWTF until operator-initiated restart.

The GWTF building is protected with a local fire alarm system and a local security alarm system. These systems are monitored by the SCADA for required interface to the Auto-Dialer.

Assigned analog (A) and digital (D) SCADA input (I) and output (O) signals are as numbered on the updated P&ID. Alarm (AL) output signals are also presented. Field instruments (FC-XXXX, non-I/O) are also listed.

In addition, the following I/O and control conditions will be tested and documented on an I/O Module Calibration Check and Sign Off form:

- VFD fault condition
- Low flow in line between air stripper and blower
- Low and high vacuum in line between air stripper and blower
- High level in air-stripper sump
- Closing of solenoid valve under alarm and no power conditions
- High temperature on blower discharge line
- Differential pressure across bag filter
- Heater function
- Autodialer function
- Proper operation of shutdown sequences 1, 2 and 3 as described in Section 13305
- Extraction wells pumps and sump pump are unable to run if blower is not on for both auto and hand mode (to prevent discharge of untreated water)
- Blower continues to run for 5 minutes after all EW pumps and sump pump are shut down (to prevent discharge of untreated water)
- Blower shuts down if all EW pumps and sump pump are not running (to prevent freezing in air stripper)
- A 2-5 minute delay after blower shutdown to allow the blower to reach a complete stop before it can be re-started (to prevent damage to blower).

The system will also be demonstrated using both the OIT and remote controls.

5.0 SHUTDOWN PROCEDURES

This section describes shutdown procedures for standard operation and maintenance and for emergency shutdown.

5.1 Operation Shut Down

This section describes the procedures necessary for safe shutdown of the treatment system from system standby as initiated by the control system. Refer to valve alignment table for off positions. The following steps shall be taken to safely shutdown the system for maintenance or repair:

1. From the Standby Mode, the operator shall turn the OA switches (at the motor control center [MCC]) to the OFF mode for the following pumps (in order): EW-5A, EW-9, EW-8, EW-10, and EW-6.

2. The operator shall verify all flow and pressure indication within the system including, influent, interconnecting process, and effluent lines.

3. Check all pressure indicators for all water and vapor conveyance piping.

4. Once safe conditions have been identified, the system shall be de-energized at the MCC to permit the necessary repairs or maintenance. Lock out / Tag out procedures shall be followed on any energized equipment work (See Section 7.3 for Lock out / Tag out procedures).

5.2 Emergency Shutdown Procedures

Upon emergency shutdown, no maintenance or repairs shall be performed before the system is de-energized in accordance to shut down procedures.

6.0 PARTIAL SYSTEM SHUTDOWN PROCEDURES

The system may need to be partially shut down for maintenance and/or repair. Partial system shutdown procedures will be discussed in the Rockaway GWTF Operation and Maintenance Manual.

7.0 SAFETY PROCEDURES

7.1 General Safety

Personnel performing these startup activities will be required to document OSHA training in accordance with 29 CFR 1910.120 (e), Hazardous Waste Operations and Emergency Response (HAZWOPER). In addition, all personnel will be required to attend site-specific health and safety training in accordance with the project health and safety plan, and all personnel will be required to attend the daily safety training briefings prior to proceeding with the order of the day.

The project health and safety plan describes all required PPE for startup activities. In addition, all personnel performing startup activities will review the confined space entry requirements (for EW vault entry) and hearing protection requirements during the initial safety training and during daily safety briefings. Additional specific safety procedures will be observed as follows.

7.2 Pressurized Equipment and Systems

The following safety procedures should be followed when dealing with pressurized equipment or systems:

1. Before accessing potentially pressurized systems, ensure that the valve alignment provided in Table 3.1 (shutdown) has been completed.

2. Verify system pressure using the pressure indicators provided with the groundwater treatment system

3. Confirm all pumps are in the “OFF” position

4. Using the appropriate bleed valve, relieve pressure by slowly opening the manual valve

5. Once pressure has been relieved, ensure that all valves are configured in the shutdown alignment as indicated in Table 3.1.

The following precautions/practices should also be followed when dealing with pressurized systems:

- Any pressurized equipment or system found to be in an unsafe operating condition shall be tagged **"OUT OF SERVICE -DO NOT USE"** at the controls and its use shall be prohibited until the unsafe conditions have been corrected.

- The normal operating pressure of pressurized equipment and systems shall not exceed the design pressure.

- No safety appliance or device shall be removed or made ineffective, except for making immediate repairs or adjustments, and then only after the pressure has been relieved and the power shut off.

- The discharge from safety valves, relief valves, and blowoffs shall be located so that it is not a hazard to personnel.

- A pressure gauge shall be provided on all pressurized equipment and systems.

- Safety and relief valves shall be provided on all pressurized equipment and systems.

7.3 Electrical Equipment and Lockout/Tagout

Electrical equipment use on site requires positive control of hazardous energy during servicing and maintenance of equipment where unexpected energization, startup of equipment, or release of stored energy could occur. Electrical equipment and lockout/tagout procedures include:

- Personnel working on site must ensure that electrical power tools, lighting equipment, etc., that are to be used have ground plugs and are plugged into ground outlets or extension cords. The plugs are not to be altered or used incorrectly (such as the addition of non-grounded plug adapters).

- Personnel must use ground fault circuit interrupters in conjunction with extension cords

- Energy sources for equipment must be turned off or disconnected and switches locked out and tagged out before servicing of equipment. Standardized locks and tags are to be used to indicate the identity of the individual using them. Each lockout/tagout device is required to be removed by the individual who applied the device.

7.4 Ladder Safety

Ladder safety requirements include those contained in EM 385-1-1 (21) (D) “Safe Access and Fall Protection - Ladders.” Ladder safety procedures include:

Ladders must be of sound construction and are to be inspected before use. Metal ladders are not allowed near electrical equipment. Wooden ladders are not to be used if painted over in such a way that cracks or defects can be hidden.

- Extension ladders must be placed so a minimum 4:1 angle ratio (4 feet up and 1 foot out) is used. Extension ladders must have anti-slip footings and be secured by substantial rope or other means. Extension ladders must extend a minimum 3 feet above the landing to be used.

- The top two rungs of a ladder are not to be used

Personnel are not allowed to stand below occupied ladders where tools and objects could fall

- Personal fall restraint systems (full-body harness and shock absorbing lanyard - no body belts) must be used and rigged to minimize free-fall distance to a maximum of 6 feet and such that the individual will not contact any lower level.

7.5 Elevated Work Locations and Fall Protection

Elevated work locations and fall protection requirements include:

- Use fall protection when exposure to fall hazards of 6 feet or greater through use of guardrail systems, safety nets or personal fall arrest systems. Use personal fall arrest systems (full-body harness and shock-absorbing lanyard - no body belts) with locking snap hooks for personal fall arrest and positioning systems rigged to minimize free-fall distance to a maximum of 6 feet and such that the individual will not contact any lower level.

- Develop written site-specific fall protection plans where significant fall hazards are present

- See that training provided to workers who may be exposed to fall hazards includes discussion of:

  - Nature of fall hazards in the area

  - Procedures for erecting, maintaining, disassembling, and inspecting fall protection systems to be used

  - Use and operation of fall protection systems (i.e., guardrails, personal fall arrest, safety nets, warning lines, safety monitoring, controlled access zones, and others to be used)

  - Employee roles in the safety monitoring system when used

  - Limitations on use of mechanical equipment

  - Procedures for handling and storage of equipment/materials and erection of overhead protection

  - Role of employees in fall protection plans

  - Review of the applicable requirements of the Occupational Safety and Health Administration fall protection requirements.

8.0 EMERGENCY PROCEDURES AND EMERGENCY CONTACT LIST

8.1 Emergency Contact List

Contact	Telephone Number
Ambulance/Paramedics/Fire/Police – Emergency	9-1-1
Emergency Hospital: Saint Clare's Hospital 25 Pocono Road, Denville, NJ 07834	973-625-6000
Rockaway Borough Fire Department (Non-emergency)	973-627-0157
Rockaway Borough Police Department (Non-emergency)	973-627-1314
Rockaway Township Fire Department (Non-emergency)	973-983-2865
Poison Control Center	1-800-492-2414
Emergency Spill Response (State of New Jersey)	1-877-927-6337
National Response Center	1-800-424-8802
Chemtrec (Chemical Transportation Emergency Center)	1-800-424-9300
Borough of Rockaway Department of Public Works Joe Rossi, DPW Supervisor	Office: 973-627-7025 Mobile: 973-713-8139
USACE NY District ACO Neal F. Kolb, P.E.	Office: 732-846-5830 Mobile: 732-616-8209
USACE NY District COR (Michael C. Johnson)	Office: 201-226-6602 Mobile: 973-418-0586
USACE NY District Project Engineer (Kevin P. O'Brien) 21 Pine Street, Suite 121, Rockaway, NJ 07866	Office: 973-627-2013 Mobile: 862-219-1163
USACE NY District Alt. Project Engineer (Kam Chan)	Office: 973-627-2013 Mobile: 201-226-6643
USACE KC District Project Manager	Office: 816-389-3239

(Saqib Khan)	Mobile: 816-695-5082
CAPE - Exton, PA 180 Gordon Drive, Suite 102, Exton, PA 19341	Office: 610-594-8606 FAX: 610-594-8609
CAPE - Corporate Office, Atlanta, GA 500 Pinnacle Court, Suite 100, Norcross, GA 30071	Office: 770-908-7200 FAX: 770-908-7219
CAPE Project Manager Michael Lamon	Office: 865-692-1283 Cell: 865-765-3643
CAPE Corporate Health and Safety Manager Glen Mayekawa, CIH	Office: 949-474-3090 Cell: 714-920-7817

8.2 Emergency Hospital Route

Emergency Hospital:

Saint Clare's Hospital

25 Pocono Road, Denville, NJ 07834

973-625-6000

Emergency Hospital Route:

1. From 1 East Main Street, Rockaway, NJ;
2. Go toward Franklin Avenue, Mill Lane (go 0.9 miles);
3. Continue on US-46 (go 1.2 miles);
4. Bear Right toward RT-53 North (go 0.1 miles);
5. Turn Right on E. Main Street (RT-53 North) (go 0.1 miles);
6. Turn Right on Diamond Springs Road (go 0.3 miles);
7. Turn Right on Pocono Road (go 0.5 miles);
8. Arrive at Saint Clare's Hospital.

9.0 LABORATORY TESTING REQUIREMENTS

This section identifies the sampling and analysis requirements for the 14-day startup and 48-hour performance testing.

9.1 Sampling Requirements and Frequency

The sampling requirements for the 14-day start-up test are summarized in Table 2.1 for the GWTF. Table 9.1 also provides a list of bottle requirements for each analysis along with the associated preservative needs and holding times.

The sampling requirements for the 48-hour performance test are summarized in Table 2.2 for GWTF. Table 9.1 also provides a list of bottle requirements for each analysis along with the associated preservative needs and holding times.

9.2 Laboratory Information

During startup and performance testing, quick turnaround time analyses are required to verify system operating conditions and performance with regard to contaminant removal from the groundwater matrix. Due to the needs of quick turnaround analyses and laboratory availability, the following labs have been pre-selected as viable options for sample analysis:

Katahdin

600 Technology Way

Scarborough, ME 04074

Tel: 207.874.2400 Fax: 207.775.4029

Point of Contact: Kelly Perkins

9.3 Physical Parameter Measurements

During startup and performance testing physical parameter such as dissolved oxygen, oxidation-reduction potential, pH, conductivity, temperature, and water level. The measurement of physical parameters will be split into two activities: water quality parameters and water level measurements from surrounding monitoring wells.

9.3.1 Water Quality Parameters

During startup and performance testing, physical parameters will be collected to monitor changing influent or effluent conditions. These changes can be indicators of potential problems that inhibit system performance. Water quality parameters will be collected in accordance with Table 2.1. Collection of data will involve the use of a Horiba U-22 or YSI water quality meter that has the capability to monitor dissolved oxygen, oxidation-reduction potential, pH, conductivity, and temperature. The instrument shall be calibrated and response checked in accordance with the manufacturer's recommendations. Sample screening will be implemented by inserting the probe of the Horiba U-22 or YSI into a flow through cell, which is specifically designed for the Horiba U-22 or YSI. The flow through cell will be connected to the influent or effluent

sample port using tubing. Once the sample port valve is actuated, the water will pass through the flow through cell for measurement of water quality parameters. The resulting water will be discharged to a 5-gallon bucket through another piece of tubing. Measurements should level off quickly and the system purge volume shall not exceed 5-gallons during this activity.

9.3.2 Water Level Measurements

Water level measurements will be monitored for the following wells and piezometers in the vicinity of GWTF: PZ-5, RBW-11, RBW-2, PZ-10A, PZ-10B, PZ-10C, PZ-7, PZ-8, MW-1R, MW-1A, RBW-1A, EW-5, PZ-9A, PZ-9B, and PZ-9C. A Solinst water level monitor will be used to measure the water level in the wells and piezometers which do not have transducers (i.e., PZ-5, PZ-10A, PZ-10C, PZ-8, MW-1R, MW-1A, PZ-9A, PZ-9B, and PZ-9C). All measurements using the Solinst water level monitor will be collected from the top of inner casing and measured to the nearest 0.1 foot. The water level measurements for RBW-11, RBW-2, PZ-10B, PZ-7, RBW-1A, and EW-5 will be collected using dedicated level transducers provided by USACE/CDM.

9.4 Sample Numbering

Sample numbering shall comply with the Field Sampling Plan and Quality Assurance Project Plan Addendum for Groundwater Treatment Systems Rockaway Borough East Main/Wall Street Plume Superfund Site prepared by CAPE under contract number DACW41-01-D-0028, task order number 002. The following excerpt from the approved plan identifies the sample numbering scheme and has been modified to only represent the required matrices.

9.4.1 Sample Numbering System

A unique sample identification number will be assigned before sample collection. This number will include site identification, location identification, and the station identification. Sample numbers will be used for coding, tracking, and reporting chemical data. Sample numbers will encode sample type, site identification, and sample sequence.

All chemical data produced by the project laboratory will be reported using the sample number. Samples will be numbered as follows:

AA-BB- CCCCC-DDDDDD-E

Conventions for generating sample numbers are presented below.

- AA: Project or Site Identification Code: Each sample will be identified by a two-digit alpha code corresponding to the Project Site Identification represented by AA, such as RB (i.e., Rockaway Borough)

- BB: Sample Matrix Code: Each sample will be identified by a two-digit sample matrix code as follows:

  SE Sediment

WW Wastewater (including sump water)

GW Groundwater

- CCCCC: Location/Station Identification Code: Each sample will be identified by an alpha-code corresponding to the sample station, followed by a two-digit sample number. Examples are: EW05A and TFE (Extraction Well 05A and Groundwater Treatment Facility Effluent, respectively).

- DDDDDD: The Sample Date: Use 6 digit sample date as month (MM), day (DD), and year (YY).

- E: Sample QA/QC Type Code: Each sample will be identified by a one-digit alpha-code corresponding to the sample QA/QC-type. Matrix Spike (MS)/Matrix Spike Duplicate (MSD) volumes and QA samples will use the same sample identification as the primary sample. The codes are as follows:

  A Field QC duplicate

  C Trip blank

  D Field equipment blank

  MS Field Matrix Spike

  MSD Field Matrix Spike Duplicate

10.0 RECORD KEEPING REQUIREMENTS

10.1 Operator logs

The operator shall keep a log of system performance and changes in the testing procedure. This log shall also contain the following items:

- Operator's name and signature
- Date
- Operating conditions and flow records with flow rates from each extraction well and total flow to the storm sewer
- Site visitors
- Shipments received
- Samples submitted for analysis
- Results of water quality parameters.

A log form is provided in Attachment 1.

TABLES

Table 1.1

NJDEP Permit Equivalency

PARAMETER	Units*	Daily Minimum	Monthly Average	Daily Maximum
Flow	gpd		(1)	(1)
pH		6.5		8.5
Total Suspended Solids (TSS)	mg/L		(1)	40
Total Organic Carbon				
Chronic Toxicity, IC25	%	61 (1) (2)		
Tetrachloroethylene (PCE)	µg/L		(1)	16
Trichloroethylene (TCE)				
1,1-Dichloroethylene (DCE)				
Chromium(3)	µg/L		50	100
Copper(3)	µg/L		50	100
Nickel	µg/L		72	144
Zinc	µg/L		100	200

*gpd – gallons per day
mg/L – milligrams per liter
µg/L – micrograms per liter
(1) Monitor and report only
(2) The final limitation of 61% becomes mandatory at the Effective Date of Permit Equivalency + 3 years
(3) Although chromium and copper are not listed in the permit tables, they are required per the permit narrative.

Notes:

- Chronic Toxicity will be sampled quarterly and all other parameters will be sampled weekly during startup testing, then monthly during operations (except for flow which will continue to be reported weekly).
- Flow will be metered and all other samples will be grab type.
- Full Target Analyte List/Target Compound List analysis must occur once per year in accordance with the DSW permit.

Table 1.2

NJDEP Air Pollution Control Permit Equivalency

PARAMETER	Units*	Daily Maximum
Flow (Groundwater through Stripper)	gpm	≤ 210[1]
VOC (Total)	lb/hr	≤ 0.03[2]
HAPs[3]	lb/hr	≤ 0.03[2]
Tetrachloroethylene	lb/hr	≤ 0.03[2]
Operating VOC Control Efficiency	%	≥ 95[4]

*gpm – gallons per minute
lb/hr – pounds per hour
≤ - less than or equal to
≥ - greater than or equal to
[1] Monitor flow rate by material feed/flow monitoring continuously, based on 1 minute intervals. Monitor flow rate with a continuous flow meter. Install, calibrate, and maintain the monitor in accordance with manufacturer's specification.
[2] Monitor by periodic emission monitoring daily, based on an instantaneous determination, using a PID. PID should be calibrated according to manufacturer's specifications.
[3] HAPs – EPA's list of Hazardous Air Pollutants
[4] Monitored by periodic emission monitoring at the approved frequency by summa canister sampling and EPA TO-15 analysis. VOCs monitored prior to carbon unit and at the stack while operating under normal conditions. Frequency of monitoring: Week (1) – Once per day, days 1, 2 and one additional day during the week. Week (2-7) – Once per week. Week (8-completion) – Monthly.
[5] If PID exceeds the Daily Maximum Permit limit, canister samples will be collected and analyzed for Total VOCs.

TABLE 1.3
EXTRACTION WELL PUMPING RATES
GWTF

WELL NUMBER	TARGET FLOW RANGE [GPM]
EW-5A	20 - 50
EW-6	40 - 100
EW-8	20 - 60
EW-9	20 - 60
EW-10	40 - 100
PLANT INFLUENT MAX. FLOW [GPM]	**210**

TABLE 2.1
CONTROL SYSTEM ALARMS
Startup Plan
Groundwater Treatment Facility For Rockaway Borough East Main/Wall Street Plume OU2 Superfund Site

Tag	Interlock No.	Condition	Sequence	Response
LAHL-100	N/A	The level in the well EW-5A has reached the high level alarm.	Operator alarm. Autodialer to advise on-call operator.	Inspect chamber and verify proper operation of well pump.
YA-100	I-3	The well EW-5A VFD has fault or overload condition.	Trip Sequence No.3. Disable Well Pump EWP-100. Autodialer to advise on-call operator.	Inspect well pump for proper operation.
LAHL-200	N/A	The level in the well EW-9 has reached the high level alarm.	Operator alarm. Autodialer to advise on-call operator.	Inspect chamber and verify proper operation of well pump.
YA-200	I-3	The well EW-9 VFD has fault or overload condition.	Trip Sequence No.3. Disable Well Pump EWP-200. Autodialer to advise on-call operator.	Inspect well pump for proper operation.
LAHL-300	N/A	The level in the well EW-6 has reached the high level alarm.	Operator alarm. Autodialer to advise on-call operator.	Inspect chamber and verify proper operation of well pump.
YA-300	I-3	The well EW-6 VFD has fault or overload condition.	Trip Sequence No.3. Disable Well Pump EWP-300. Autodialer to advise on-call operator.	Inspect well pump for proper operation.
FAL-100	I-3	The flow from the well EW-5A is below the low flow setpoint	Trip Sequence No.3. Disable Well Pump EWP-100. Autodialer to advise on-call operator.	Inspect chamber and verify proper operation of well pump.
FAL-200	I-3	The flow from the well EW-9 is below the low flow setpoint	Trip Sequence No.3. Disable Well Pump EWP-200. Autodialer to advise on-call operator.	Inspect chamber and verify proper operation of well pump.
FAL-300	I-3	The flow from the well EW-6 is below the low flow setpoint	Trip Sequence No.3. Disable Well Pump EWP-300. Autodialer to advise on-call operator.	Inspect chamber and verify proper operation of well pump.
LAHH-500	I-2	The Building Sump flooded	Trip Sequence No. 2. System Shutdown- Shuts down all extraction well pumps, sump pump, heater and Air Stripper Blower. (Blower shall continue running for a period of 5 minutes after stopping all well pumps and sump pump). Autodialer to advise on-call operator.	Inspect Air Stripper and associated piping for leaks. Arrange repairs as necessary.
TE-100	N/A	Enclosure Temperature High	Operator alarm. Autodialer to advise on-call operator.	Inspect Temperature of Air Blower/Air Stripper/Sump Pump Enclosure
YIC-100	N/A	Process On/Off	Operator alarm. Autodialer to advise on-call operator.	Inspect System for proper operation.

TABLE 2.1, Continued
CONTROL SYSTEM ALARMS
Startup Plan
Groundwater Treatment Facility For Rockaway Borough East Main/Wall Street Plume OU2 Superfund Site

FAL-400	I-2	Low flow detected in blower discharge line	Trip Sequence No. 2. System Shutdown- Shuts down all extraction well pumps, sump pump, heater and Air Stripper Blower.Autodialer to advise on-call operator.	Inspect Air Stripper Blower and associated piping.
PAHL-410	I-2	High & Low vacuum detected in blower suction line	Trip Sequence No. 2. System Shutdown- Shuts down all extraction well pumps, sump pump, heater and Air Stripper Blower.Autodialer to advise on-call operator.	Inspect Air Stripper Blower and associated piping.
PAH-400	I-2	High discharge pressure blower	Trip Sequence No. 2. System Shutdown- Shuts down all extraction well pumps, sump pump, heater and Air Stripper Blower.Autodialer to advise on-call operator.	Inspect Air Stripper Blower and associated piping.
YA-400	I-2	Air Stripper Blower motor overload.	Trip Sequence No. 2. System Shutdown- Shuts down all extraction well pumps, sump pump, heater and Air Stripper Blower.Autodialer to advise on-call operator.	Inspect Air Stripper Blower.
LAH-410	N/A	The level in the Air Stripper has reached the high level alarm.	Trip Sequence No. 2. System Shutdown- Shuts down all extraction well pumps, sump pump, heater and Air Stripper Blower.Autodialer to advise on-call operator.	Inspect Air Stripper. Arrange repairs as necessary.
LAHH-420	I-2	Manhole flooded	Trip Sequence No. 2. System Shutdown- Shuts down all extraction well pumps, sump pump, heater and Air Stripper Blower. (Blower shall continue running for a period of 5 minutes after stopping all well pumps and sump pump). Autodialer to advise on-call operator.	Inspect manhole for obstructions. Arrange repairs as necessary.
LAHL-700	N/A	The level in the well EW-8 has reached the high level alarm.	Operator alarm. Autodialer to advise on-call operator.	Inspect chamber and verify proper operation of well pump.
YA-700	I-3	The well EW-8 VFD has fault or overload condition.	Trip Sequence No.3. Disable Well Pump EWP-700. Autodialer to advise on-call operator.	Inspect well pump for proper operation.

TABLE 2.1, Continued
CONTROL SYSTEM ALARMS
Startup Plan
Groundwater Treatment Facility For Rockaway Borough East Main/Wall Street Plume OU2 Superfund Site

FAL-700	I-3	The flow from the well EW-8 is below the low flow setpoint	Trip Sequence No.3. Disable Well Pump EWP-700. Autodialer to advise on-call operator.	Inspect well pump for proper operation.
DPAH-400	N/A	High Differential Pressure	Operator alarm. Autodialer to	Inspect Bag Filter for proper
FY-100	I-1	Low flow detected in discharge lines from all wells.	Trip Sequence No. 1. Shuts down all extraction well pumps. Autodialer to advise on-call operator.	Inspect well pumps and control system for proper operation.
FY-400	I-1	Sum of the flows from all wells is +/-10% of the flow entering the bag filter (FI-400).	Trip Sequence No. 1. Shuts down all extraction well pumps. Autodialer to advise on-call operator.	Inspect flowmeters and control system for proper operation.
LALL-100	I-3	The level in the well EW-5A has reached the low-low level alarm.	Trip Sequence No.3. Disable Well Pump EWP-100. Autodialer to advise on-call operator.	Inspect well pump for proper operation.
LALL-700	I-3	The level in the well EW-8 has reached the low-low level alarm.	Trip Sequence No.3. Disable Well Pump EWP-700. Autodialer to advise on-call operator.	Inspect well pump for proper operation.
LALL-200	I-3	The level in the well EW-9 has reached the low-low level alarm.	Trip Sequence No.3. Disable Well Pump EWP-200. Autodialer to advise on-call operator.	Inspect well pump for proper operation.
LALL-300	I-3	The level in the well EW-6 has reached the low-low level alarm.	Trip Sequence No.3. Disable Well Pump EWP-300. Autodialer to advise on-call operator.	Inspect well pump for proper operation.
TAH-400	I-2	Blower Discharge Temperature High	Trip Sequence No. 2. System Shutdown- Shuts down all extraction well pumps, sump pump, heater and Air Stripper Blower. Autodialer to advise on-call operator.	Inspect Air Stripper Blower and associated piping.
DPAHH-400	I-2	High-High Differential Pressure detected across Bag Filter	Trip Sequence No. 2. System Shutdown- Shuts down all extraction well pumps, sump pump, heater and Air Stripper Blower. (Blower shall continue running for a period of 5 minutes after stopping all well pumps and sump pump). Autodialer to advise on-call operator.	Inspect Bag Filter for proper operation

Note: Interlock number indicates which Shutdown Sequence (No. 1, 2, or 3) is activated.

TABLE 2.2

14-DAY START-UP SCHEDULE FOR GWTF

Startup Plan

Groundwater Treatment Facility For Rockaway Borough East Main/Wall Street Plume OU2 Superfund Site

Activity #	Flow Rate [gpm]	Activity	Day	Locations	Frequency	Matrix	Parameters	Total Samples
EW-5A (Flow Scenario 1)	20	Water Level Measurements	Days 1 - 6	*Refer to Note #1*	One round/hour for first 8 hours, then 2 rounds per day	GW	Water Levels	20 (min)
		Extraction Well Sampling	Days 1 - 6	Extraction Well Sample Port	1 per well per week (min)	GW	TCL VOCs, TAL Metals, Wet Chemistry	1 (min)
		Extraction Well Monitoring	Days 1 - 6	Extraction Well Sample Port	1 per well (min)	GW	FM – *Refer to Note #2*	1 (min)
EW-9 (Flow Scenario 1)	20	Water Level Measurements	Days 1 - 6	*Refer to Note #1*	3 rounds per step	GW	Water Levels	57 (min)
		Extraction Well Sampling	Days 1 - 6	Extraction Well Sample Port	1 per well per week (min)	GW	TCL VOCs, TAL Metals, Wet Chemistry	1 (min)
		Extraction Well Monitoring	Days 1 - 6	Extraction Well Sample Port	1 per well (min)	GW	FM – *Refer to Note #2*	1 (min)
EW-8 (Flow Scenario 1)	20	Water Level Measurements	Days 1 - 6	*Refer to Note #1*	3 rounds per step	GW	Water Levels	57 (min)
		Extraction Well Sampling	Days 1 - 6	Extraction Well Sample Ports	1 per well per week (min)	GW	TCL VOCs, TAL Metals, Wet Chemistry	1 (min)
		Extraction Well Monitoring	Days 1 - 6	Extraction Well Sample Ports	1 per well (min)	GW	FM – *Refer to Note #2*	1 (min)
EW-10 (Flow Scenario 1)	75	Water Level Measurements	Days 1 - 6	*Refer to Note #1*	3 rounds per step	GW	Water Levels	57 (min)
		Extraction Well Sampling	Days 1 - 6	Extraction Well Sample Ports	1 per well per week (min)	GW	TCL VOCs, TAL Metals, Wet Chemistry	1 (min)
		Extraction Well Monitoring	Days 1 - 6	Extraction Well Sample Ports	1 per well (min)	GW	FM – *Refer to Note #2*	1 (min)

TABLE 2.2, Continued
14-DAY START-UP SCHEDULE FOR GWTF
Startup Plan
Groundwater Treatment Facility For Rockaway Borough East Main/Wall Street Plume OU2 Superfund Site

EW-6 (Flow Scenario 1)	75	Water Level Measurements	Days 1 - 6	*Refer to Note #1*	3 rounds per step	GW	Water Levels	57 (min)
		Extraction Well Sampling	Days 1 - 6	Extraction Well Sample Ports	1 per well per week (min)	GW	TCL VOCs, TAL Metals, Wet Chemistry	1 (min)
		Extraction Well Monitoring	Days 1 - 6	Extraction Well Sample Ports	1 per well (min)	GW	FM – *Refer to Note #2*	1 (min)
Groundwater Treatment System	210	Influent Sampling	Days 1 - 6	Influent Sample Port	1 per day (min)	GW	TCL VOCs, Wet Chemistry	6 (min)
		Influent Monitoring	Days 1 - 6	Influent Sample Port	1 per day (min)	GW	FM – *Refer to Note #2*	6 (min)
		Effluent Sampling	Days 1 - 6	Effluent Sample Port	1 per day (min)	GW	TCL VOCs, TAL Metals, Wet Chemistry	6 (min)
		Effluent Monitoring	Days 1 - 6	Effluent Sample Port	1 per week (min)	GW	FM – *Refer to Note #2*	1 (min)
Extended Performance Testing of Flow Scenarios (Section 2.2 of Plan)	Plant Flow - Scenarios 1, 4, and 5: 210 gpm Scenarios 2 and 3: 155 gpm	Water Level Measurements	Day 7 - 14	*Refer to Note #1*	3 Rounds per day (min)	GW	Water Levels	24 (min)
		Extraction Well Sampling	Day 7 - 14	Extraction Well Sample Ports	1 per well per week (min)	GW	TCL VOCs	6 (min)
		Extraction Well Monitoring	Day 7 - 14	Extraction Well Sample Ports	1 per well per week (min)	GW	FM – *Refer to Note #2*	6 (min)
		Influent Sampling	Day 7 - 14	Influent Sample Port	1 per week during Scenario 4 (min)	GW	TCL VOCs, TAL Metals	1 (min)
		Influent Monitoring	Day 7 - 14	Influent Sample Port	1 per week (min)	GW	FM – *Refer to Note #2*	1 (min)
		Process Sampling	Day 7 - 14	After Bag Filter	1 per week during Scenario 4 (min)	GW	TCL VOCs, TAL Metals, TSS, Hardness, Alkalinity	1 (min)
		Effluent Sampling	Day 7 - 14	Effluent Sample Port	1 per week during Scenario 4 (min)	GW	(*Refer to Note #3*) Chronic Toxicity Included	1 (min)
		Effluent Monitoring	Day 7 - 14	Effluent Sample Port	1 per week (min)	GW	FM – *Refer to Note #2*	1 (min)
		APC Permit Monitoring	Day 7 - 14	Effluent Stack Sample Port	One per day	Vapor	VOCs, HAPs, PCE	1/day
		APC Permit Monitoring	Day 7 - 14	Effluent Stack and VPGAC Ports	*Refer to Note #4*	Vapor - Collected into Summa Canister	VOC Control effeciency (VOCs, HAPs, PCE by TO-15)	1 (min)

Note #1: Well List: PZ-5, RBW-11, RBW-2, PZ-10A, PZ-10B, PZ-10C, PZ-7, PZ-8, MW-1R, MW-1A, RBW-1A, PZ-9A, PZ-9B, and PZ-9C
Note #2: FM – Field Monitoring parameters: Water Level, Dissolved Oxygen (DO), pH, Conductivity, Temperature, Oxidation Reduction Potential (ORP)
Note #3: Effluent water quality shall conform to NJPDES/DSW permit equivalency requirements. Chronic Toxicity to be excluded for well testing.
Note #4: Frequency of monitoring: Week (1) – Once per day, days 1, 2 and one additional day during the week. Week (2-7) – Once per week. Week (8-completion) – Monthly

TABLE 2.3

48-HOUR PERFORMANCE TEST SCHEDULE

Startup Plan

Groundwater Treatment Facility For Rockaway Borough East Main/Wall Street Plume OU2 Superfund Site

Activity	Sample Location	Samples per Event	Frequency	Parameters	Total Samples
Extraction Well Sampling	Extraction Well Sampling Ports; EW-5A, EW-6, EW-8, EW-9, and EW-10	One (1) at each well location	One per day for two (2) days	TCL VOC's	10
Extraction Well Monitoring	Extraction Well Sampling Ports; EW-5A, EW-6, EW-8, EW-9, and EW-10	One (1) at each well location	One per day for two (2) days	Water Level, Dissolved Oxygen, pH, Conductivity, Temperature, Oxidation/Reduction Potential	10
Influent Sampling	Influent Sampling Port	One (1)	One per day for two (2) days	TCL VOC's	2
Influent Monitoring	Influent Sampling Port	One (1)	One per day for two (2) days	Water Level, Dissolved Oxygen, pH, Conductivity, Temperature, Oxidation/Reduction Potential	2
Effluent Sampling	Effluent Sampling Port	One (1)	One per day for two (2) days	TCL VOCs	2
Effluent Sampling	Effluent Sampling Port	One (1)	One per day for two (2) days	*Refer to Note #1*	2
Vapor Sampling	Effluent Stack	One (1)	one/day	VOCs HAPs, PCE, *Refer to Note #2*	2
Vapor Sampling	Effluent Stack and VPGAC Ports	One (1)	one/week	VOC Control effeciency, *Refer to Note #3*	3

Note #1: As per NJPDES permit equivalency requirements, effluent water will conform to permit equivalency standards. See Table 1.1 of the Startup Plan. Chronic Toxicity to be excluded.

Note # 2: Vapor sampling will be performed with a properly calibrated photoionization detector (PID). See Table 1.2 of the Startup Plan.

Note #3: VOC Control efficiency samples will be collected using Summa Cannisters and sent to a fixed laboratory for VOCs analysis.

TCL VOC - Target Compound List Volatile Organic Compound

Table 3.1 Valve Alignment

VALVE NUMBER	VALVE TYPE	VALVE MFG	VALVE MODEL NO.	VALVE POSITION					DESCRIPTION
				AIR STRIPPER OPERATING	VPGAC LEAD 1	VPGAC LEAD 2	STANDBY	SHUTDOWN	
101	TWCV	CHEMLINE	WP SERIES	OPEN	OPEN	OPEN	OPEN	OPEN	2" WAFER CHECK VALVE FOR EW-5A (PR-03)
102	GATE	ASAHI	TYPE P	OPEN	OPEN	OPEN	OPEN	OPEN	2" GATE VALVE FOR EW-5A (PR-03)
103	BALL	ASAHI	TYPE 21	CLOSE	CLOSE	CLOSE	CLOSE	CLOSE	1/2" BALL VALVE FOR EW-5A (PR-03)
104	BALL	ASAHI	TYPE 21	OPEN	OPEN	OPEN	OPEN	OPEN	1/2" BALL VALVE FOR EW-5A (PR-03)
201	TWCV	CHEMLINE	WP SERIES	OPEN	OPEN	OPEN	OPEN	OPEN	2" WAFER CHECK VALVE FOR EW-9 (PR-03)
202	GATE	ASAHI	TYPE P	OPEN	OPEN	OPEN	OPEN	OPEN	2" GATE VALVE FOR EW-9 (PR-03)
203	BALL	ASAHI	TYPE 21	CLOSE	CLOSE	CLOSE	CLOSE	CLOSE	1/2" BALL VALVE FOR EW-9 (PR-03)
204	BALL	ASAHI	TYPE 21	OPEN	OPEN	OPEN	OPEN	OPEN	1/2" BALL VALVE FOR EW-9 (PR-03)
205	BALL	ASAHI	TYPE 21	CLOSE	CLOSE	CLOSE	CLOSE	CLOSE	1/2" BALL VALVE FOR EW-9 (PR-03)
301	TWCV	CHEMLINE	WP SERIES	OPEN	OPEN	OPEN	OPEN	OPEN	3" WAFER CHECK VALVE FOR EW-6 (PR-03)
302	GATE	ASAHI	TYPE P	OPEN	OPEN	OPEN	OPEN	OPEN	3" GATE VALVE FOR EW-6 (PR-03)
303	BALL	ASAHI	TYPE 21	CLOSE	CLOSE	CLOSE	CLOSE	CLOSE	1/2" BALL VALVE FOR EW-6 (PR-03)
304	BALL	ASAHI	TYPE 21	OPEN	OPEN	OPEN	OPEN	OPEN	1/2" BALL VALVE FOR EW-6 (PR-03)
306	BALL	ASAHI	TYPE 21	CLOSE	CLOSE	CLOSE	CLOSE	CLOSE	1/2" BALL VALVE FOR EW-6 (PR-03)
401	BALL	ASAHI	TYPE 21	CLOSE	CLOSE	CLOSE	CLOSE	CLOSE	1/2" BALL VALVE CLEANOUT MANHOLE (PR-04)
402	BALL	ASAHI	TYPE 21	OPEN	OPEN	OPEN	OPEN	CLOSE	4" BALL VALVE BETWEEN CLEANOUT MANHOLE TO BAG FILTER (PR-04)
403	BALL	ASAHI	TYPE 21	CLOSE	CLOSE	CLOSE	CLOSE	CLOSE	1/2" BALL VALVE BETWEEN CLEANOUT MANHOLE AND BAG FILTER (PR-04)
404	BALL	ASAHI	TYPE 21	OPEN	OPEN	OPEN	OPEN	OPEN	3" BALL VALVE BETWEEN CLEANOUT MANHOLE AND BAG FILTER (PR-04)
405	BALL	ASAHI	TYPE 21	OPEN	OPEN	OPEN	OPEN	OPEN	3" BALL VALVE BETWEEN CLEANOUT MANHOLE AND BAG FILTER (PR-04)
406	SV	MAGNATROL	44A39	OPEN	OPEN	OPEN	CLOSE	CLOSE	3" SOLENOID BALL VALVE BETWEEN CLEANOUT MANHOLE AND BAG FILTER (PR-04)
407	BALL	ASAHI	TYPE 21	OPEN	OPEN	OPEN	OPEN	OPEN	3" BALL VALVE BETWEEN CLEANOUT MANHOLE AND BAG FILTER (PR-04)
408	BALL	ASAHI	TYPE 21	OPEN	OPEN	OPEN	OPEN	OPEN	1/2" BALL VALVE NEAR BAG FILTER (PR-04)
409	BALL	ASAHI	TYPE 21	OPEN	OPEN	OPEN	OPEN	OPEN	1/2" BALL VALVE NEAR BAG FILTER (PR-04)
410	BALL	ASAHI	TYPE 21	OPEN	OPEN	OPEN	OPEN	OPEN	3" BALL VALVE AFTER BAG FILTER (PR-04)
411	BALL	ASAHI	TYPE 21	OPEN	OPEN	OPEN	OPEN	OPEN	1/2" BALL VALVE WITH STRIPPER (PR-04)
412	BALL	ASAHI	TYPE 21	OPEN	OPEN	OPEN	OPEN	OPEN	1/2" BALL VALVE WITH STRIPPER (PR-04)
413	BALL	ASAHI	TYPE 21	OPEN	OPEN	OPEN	OPEN	OPEN	1/2" BALL VALVE WITH STRIPPER (PR-04)
414	BU	ASAHI	TYPE 57L	OPEN	OPEN	OPEN	OPEN	CLOSE (MANUAL)	6" BUTTERFLY VALVE AFTER STRIPPER (PR-04)
415	BU	ASAHI	TYPE 57L	OPEN	OPEN	OPEN	OPEN	CLOSE (MANUAL)	6" BUTTERFLY VALVE AFTER STRIPPER (PR-04)
416	BALL	ASAHI	TYPE 21	CLOSE	CLOSE	CLOSE	CLOSE	CLOSE	1/2" BALL VALVE AFTER AIR STRIPPER (PR-04)
417	BALL	ASAHI	TYPE 21	CLOSE	CLOSE	CLOSE	CLOSE	CLOSE	1/2" BALL VALVE CLEANOUT MANHOLE (PR-04)
418	TWCV	CHEMLINE	WP SERIES	OPEN	OPEN	OPEN	OPEN	OPEN	6" CHECK VALVE AFTER AIR STRIPPER (PR-04)
419	BU	ASAHI	TYPE 21	OPEN	OPEN	OPEN	OPEN	CLOSE (MANUAL)	10" BUTTERFLY VALVE WITH STRIPPER (PR-04)
420	BALL	ASAHI	TYPE 21	CLOSE	CLOSE	CLOSE	CLOSE	CLOSE	1/2" BALL VALVE BETWEEN BAG FILTER AND STRIPPER (PR-04)
421	BALL	ASAHI	TYPE 21	OPEN	OPEN	OPEN	OPEN	OPEN	1/4" BALL VALVE FROM VENT TO GAC (PR-05)
422	BALL	ASAHI	TYPE 21	CLOSE	CLOSE	CLOSE	CLOSE	CLOSE	1/4" BALL VALVE FROM VENT TO GAC (PR-05)
423	BALL	HAYWARD	TB SERIES	OPEN	OPEN	OPEN	OPEN	OPEN	1/4" BALL VALVE FROM PI440 TO GAC1 (PR-05)

VALVE NUMBER	VALVE TYPE	VALVE MFG	VALVE MODEL NO.	VALVE POSITION					DESCRIPTION
				AIR STRIPPER OPERATING	VPGAC LEAD 1	VPGAC LEAD 2	STANDBY	SHUTDOWN	
424	BALL	HAYWARD	TB SERIES	CLOSE	CLOSE	CLOSE	CLOSE	CLOSE	1/4" BALL VALVE FROM PI440 TO GAC1 (PR-05)
425	BALL	ASAHI	TYPE 21	CLOSE	CLOSE	CLOSE	CLOSE	CLOSE	1-1/2" BALL VALVE FROM SUMP TO GAC1 (PR-05)
426	BALL	HAYWARD	TB SERIES	OPEN	OPEN	OPEN	OPEN	OPEN	1/4" BALL VALVE FROM PI450 TO GAC2 (PR-05)
427	BALL	HAYWARD	TB SERIES	CLOSE	CLOSE	CLOSE	CLOSE	CLOSE	1/4" BALL VALVE FROM PI450 TO GAC2 (PR-05)
428	BALL	ASAHI	TYPE 21	CLOSE	CLOSE	CLOSE	CLOSE	CLOSE	1-1/2" BALL VALVE FROM SUMP TO GAC2 (PR-05)
429	BALL	ASAHI	TYPE 21	OPEN	OPEN	OPEN	OPEN	CLOSE	1/2" BALL VALVE FROM GACS TO STACK (PR-05)
430	BV	ASAHI	TYPE 57L	NOTE 2	CLOSE	OPEN	NOTE 2	NOTE 2	12" BUTTERFLY VALVE BETWEEN GACS (PR-05)
431	BV	ASAHI	TYPE 57L	NOTE 2	OPEN	CLOSE	NOTE 2	NOTE 2	12" BUTTERFLY VALVE BETWEEN GACS (PR-05)
432	BV	ASAHI	TYPE 57L	NOTE 2	CLOSE	OPEN	NOTE 2	NOTE 2	12" BUTTERFLY VALVE BETWEEN GACS (PR-05)
433	BV	ASAHI	TYPE 57L	NOTE 2	OPEN	CLOSE	NOTE 2	NOTE 2	12" BUTTERFLY VALVE BETWEEN GACS (PR-05)
434	BV	ASAHI	TYPE 57L	NOTE 2	CLOSE	OPEN	NOTE 2	NOTE 2	12" BUTTERFLY VALVE BETWEEN GACS (PR-05)
435	BV	ASAHI	TYPE 57L	NOTE 2	OPEN	CLOSE	NOTE 2	NOTE 2	12" BUTTERFLY VALVE BETWEEN GACS (PR-05)
436	BALL	ASAHI	TYPE 21	CLOSE	CLOSE	CLOSE	CLOSE	CLOSE	1/2" BALL VALVE BETWEEN GACS (PR-05)
437	BALL	ASAHI	TYPE 21	CLOSE	CLOSE	CLOSE	CLOSE	CLOSE	1/2" BALL VALVE BETWEEN SUMP AND CLEANOUT MANHOLE (PR-04)
438	BV	ASAHI	TYPE 57L	OPEN	CLOSE	CLOSE	CLOSE	CLOSE	6" BUTTERFLY VALVE TO DRAIN MANHOLE (PR-04)
439	BALL	ASAHI	TYPE 21	CLOSE	CLOSE	CLOSE	CLOSE	CLOSE	1/2" BALL VALVE FROM BAG FILTER (PR-04)
440	BALL	ASAHI	TYPE 21	CLOSE	CLOSE	CLOSE	CLOSE	CLOSE	1/2" BALL VALVE BETWEEN BAG FILTER AND STRIPPER (PR-04)
441	BALL	ASAHI	TYPE 21	CLOSE	CLOSE	CLOSE	CLOSE	CLOSE	1/2" BALL VALVE BAG FILTER (PR-04)
442	BALL	ASAHI	TYPE 21	OPEN	OPEN	OPEN	OPEN	OPEN	1/2" BALL VALVE BETWEEN AIR STRIPPER AND HEATER (PR-04)
443	BALL	ASAHI	TYPE 21	OPEN	OPEN	OPEN	OPEN	OPEN	1/2' BALL VALVE BETWEEN AIR STRIPPER AND BLOWER (PR-04)
501	BCV	GA INDUSTRIES	240-T GA INDUSTRIES	OPEN	OPEN	OPEN	OPEN	OPEN	2" CHECK VALVE SUMP (PR-04)
502	BALL	ASAHI	TYPE 21	OPEN	OPEN	OPEN	OPEN	OPEN	2" BALL VALVE SUMP (PR-04)
503	RCV	PROCO PRODUCTS	STYLE 730	OPEN	OPEN	OPEN	OPEN	OPEN	1-1/2" RUBBER CHECK VALVE SUMP (PR-04)
504	RCV	PROCO PRODUCTS	STYLE 730	OPEN	OPEN	OPEN	OPEN	OPEN	2" RUBBER CHECK VALVE SUMP (PR-04)
600	BPV	WATS	SERIES 919	OPEN	OPEN	OPEN	OPEN	OPEN	3/4" BACK FLOW PREVENTER (PR-04)
601	BALL	METSO	JAMESBURY CLINCHER SERIES 2000 STYLE 21-11	CLOSE	CLOSE	CLOSE	CLOSE	CLOSE	1" BALL VALVE BEFORE BACKFLOW PREVENTER (PR-04)
701	TWCV	CHEMLINE	WP SERIES	OPEN	OPEN	OPEN	OPEN	OPEN	2" CHECK VALVE FOR EW-8 (PR-03)
702	GATE	ASAHI	TYPE P	OPEN	OPEN	OPEN	OPEN	OPEN	2" GATE VALVE FOR EW-8 (PR-03)
703	BALL	ASAHI	TYPE 21	CLOSE	CLOSE	CLOSE	CLOSE	CLOSE	1/2" BALL VALVE FOR EW-8 (PR-03)
704	BALL	ASAHI	TYPE 21	OPEN	OPEN	OPEN	OPEN	OPEN	1/2" BALL VALVE FOR EW-8 (PR-03)
801	TWCV	CHEMLINE	WP SERIES	OPEN	OPEN	OPEN	OPEN	OPEN	2" CHECK VALVE FOR EW-10 (PR-03)
802	GATE	ASAHI	TYPE P	OPEN	OPEN	OPEN	OPEN	OPEN	3" GATE VALVE FOR EW-10 (PR-03)
803	BALL	ASAHI	TYPE 21	CLOSE	CLOSE	CLOSE	CLOSE	CLOSE	1/2" BALL VALVE FOR EW-10 (PR-03)
804	BALL	ASAHI	TYPE 21	OPEN	OPEN	OPEN	OPEN	OPEN	1/2" BALL VALVE FOR EW-10 (PR-03)
806	BALL	ASAHI	TYPE 21	CLOSE	CLOSE	CLOSE	CLOSE	CLOSE	1/2" BALL VALVE FOR EW-10 (PR-03)

NOTE 1 Check valves and the backflow preventer cannot close; therefore the position of those valves do not impact the operation.
NOTE 2 VPGAC valves which determine lead or lag configuration will be positioned in one of the VPGAC lead configurations for the air stripper operating, standby, and shutdown system states.

TABLE 9.1
SAMPLE CONTAINERS FOR STARTUP TESTING
Startup Plan
Groundwater Treatment Facility For Rockaway Borough East Main/Wall Street Plume OU2 Superfund Site

ANALYSIS	METHOD	#	and TYPE OF CONTAINTERS	PRESERVATION
TCL VOCs	EPA Method 8260B	3	40 mL vials w/ Teflon-lined Septum CAP	HCl to pH < 2
TAL Metals and Chromium, Copper, Nickel & Zinc	EPA Method 6020A	1	500 mL HDPE	HNO3 to pH < 2
Wet Chemistry (hardness, alkalinity, conductivity)	EPA Methods 130.1, 310.2, 120.1	1	500 mL HDPE	Neat
pH	Field measured with calibrated Horiba or YSI instrument	1	4- or 8-ounce glass jar	Neat
Total Suspended Solids (TSS)	EPA Method SM2540D	1	500 mL HDPE	Neat
Chronic Toxicity	EPA Method 1002-0	6	1 gal. HDPE	Neat

Collected Chronic Toxicity samples 2 containers at-a-time for 3 alternating days

HDPE - High Density Polyethylene

mL - Milliliter

L - Liter

ATTACHMENTS

Attachment 1

OPERATOR LOG FORM

Startup Plan

Groundwater Treatment Facility For Rockaway Borough East Main/Wall Street Plume OU2 Superfund Site

Date _____ Note: complete new log form for each date.

Operator Name (Print): _____

Time In (Military): _____ Time Out (Military): _____

Flow Readings (gal/min):

Collect readings upon arrival and just before leaving.

Time	EW-5A	EW-6	EW-8	EW-9	EW-10

List Site Visitors:

Time In	Visitor Name	Time Out

Materials / Equipment Receipt Log:

Description	Specifications Section	QC Inspection
		Pass Fail
		Pass Fail
		Pass Fail
		Pass Fail
		Pass Fail
		Pass Fail

Attachment 1, Continued
OPERATOR LOG FORM
Startup Plan
Groundwater Treatment Facility For Rockaway Borough East Main/Wall Street Plume OU2 Superfund Site

Sample Collection Log:

Sample ID	Description/Location	Time Collected	Tracking #

Water Quality Data:

Parameter	EW-5A	EW-6	EW-8	EW-9	EW-10	Units
pH						Log H Unit
DO						mg/L
Conductivitiy						mS
Temperature						˚F
ORP						millivolts

Vapor-Phase Granular Activited Carbon PID Readings

Circle Lead and Lag Units

	Lead		Lag		
	VGAC-1	VGAC-2	VGAC-1	VGAC-2	Emissions Stack
Inlet					
Outlet					
Time					

ATTACHMENT 1
ROCKAWAY STARTUP FUNCTIONALITY TESTING FORM

VPGAC FUNCTIONALITY TESTING		
CONFIGURATION 1		
Blower to Heater Readings		
	°F	Temperature (TI-400)
	psi	Pressure (PI-400)
Heater to VPGAC Units Readings		
	psi	Pressure (PI-430)
VPGAC 1		
	°F	Temperature (TI-460)
	psi	Pressure (PI-440)
VPGAC 2		
	°F	Temperature (TI-470)
	psi	Pressure (PI-450)
CONFIGURATION 2		
Blower to Heater Readings		
	°F	Temperature (TI-400)
	psi	Pressure (PI-400)
Heater to VPGAC Units Readings		
	psi	Pressure (PI-430)
VPGAC 1		
	°F	Temperature (TI-460)
	psi	Pressure (PI-440)
VPGAC 2		
	°F	Temperature (TI-470)
	psi	Pressure (PI-450)

ATTACHMENT 1
ROCKAWAY STARTUP FUNCTIONALITY TESTING FORM

AIR STRIPPER FUNCTIONALITY TESTING		
AIR STRIPPER		
Air Stripper Water		
	psi	Pressure (PI-410)
Air Stripper Vapor		
	psi	Pressure (PI-420)
	cfm	Flow (FI-400)
Air Stripper Discharge		
	gpm	Flow (FI-420)

ATTACHMENT 1
ROCKAWAY STARTUP FUNCTIONALITY TESTING FORM

VPGAC AND AIR STRIPPER FUNCTIONALITY TESTING					
CONFIGURATION 1				**CONFIGURATION 2**	
Blower to Heater Readings				Blower to Heater Readings	
	°F	Temperature (TI-400)		°F	Temperature (TI-400)
	psi	Pressure (PI-400)		psi	Pressure (PI-400)
Heater to VPGAC Units Readings				Heater to VPGAC Units Readings	
	psi	Pressure (PI-430)		psi	Pressure (PI-430)
VPGAC 1				VPGAC 1	
	°F	Temperature (TI-460)		°F	Temperature (TI-460)
	pis	Pressure (PI-440)		psi	Pressure (PI-440)
VPGAC 2				VPGAC 2	
	°F	Temperature (TI-470)		°F	Temperature (TI-470)
	psi	Pressure (PI-450)		psi	Pressure (PI-450)
AIR STRIPPER				**AIR STRIPPER**	
Air Stripper Water				Air Stripper Water	
	psi	Pressure (PI-410)		psi	Pressure (PI-410)
Air Stripper Vapor				Air Stripper Vapor	
	psi	Pressure (PI-420)		psi	Pressure (PI-420)
	cfm	Flow (FI-400)		cfm	Flow (FI-400)
Air Stripper Discharge				Air Stripper Discharge	
	gpm	Flow (FI-420)		cfm	Flow (FI-420)

ATTACHMENT 1
ROCKAWAY STARTUP FUNCTIONALITY TESTING FORM

VPGAC, AIR STRIPPER, BAG FILTER, AND SUMP FUNCTIONALITY TESTING						
CONFIGURATION 1				**CONFIGURATION 2**		
Blower to Heater Readings				Blower to Heater Readings		
	°F	Temperature (TI-400)			°F	Temperature (TI-400)
	psi	Pressure (PI-400)			psi	Pressure (PI-400)
Heater to VPGAC Units Readings				Heater to VPGAC Units Readings		
	psi	Pressure (PI-430)			psi	Pressure (PI-430)
VPGAC 1				VPGAC 1		
	°F	Temperature (TI-460)			°F	Temperature (TI-460)
	psi	Pressure (PI-440)			psi	Pressure (PI-440)
VPGAC 2				VPGAC 2		
	°F	Temperature (TI-470)			°F	Temperature (TI-470)
	psi	Pressure (PI-450)			psi	Pressure (PI-450)
AIR STRIPPER				**AIR STRIPPER**		
Air Stripper Water				Air Stripper Water		
	psi	Pressure (PI-410)			psi	Pressure (PI-410)
Air Stripper Vapor				Air Stripper Vapor		
	psi	Pressure (PI-420)			psi	Pressure (PI-420)
	cfm	Flow (FI-400)			cfm	Flow (FI-400)
Air Stripper Discharge				Air Stripper Discharge		
	gpm	Flow (FI-420)			cfm	Flow (FI-420)
BAG FILTER				**BAG FILTER**		
	in-WC	Differential Pressure (DP-400)			in-WC	Differential Pressure (DP-400)

ATTACHMENT 1
ROCKAWAY STARTUP FUNCTIONALITY TESTING FORM

EXRACTION WELLS FUNCTIONALITY TESTING

Initial		
EW-5A		
	gpm	Flow Rate (FI-100)
	psi	Pressure (PI-100)
	feet	Water Level (LI-100)
clear/murky/muddy		Water Appearance
EW-6		
	gpm	Flow Rate (FI-300)
	psi	Pressure (PI-300)
	feet	Water Level (LI-300)
clear/murky/muddy		Water Appearance
EW-8		
	gpm	Flow Rate (FI-700)
	psi	Pressure (PI-700)
	feet	Water Level (LI-700)
clear/murky/muddy		Water Appearance
EW-9		
	gpm	Flow Rate (FI-200)
	psi	Pressure (PI-200)
	feet	Water Level (LI-200)
clear/murky/muddy		Water Appearance
EW-10		
	gpm	Flow Rate (FI-800)
	psi	Pressure (PI-800)
	feet	Water Level (LI-800)
clear/murky/muddy		Water Appearance

90%		
EW-5A		
	gpm	Flow Rate (FI-100)
	psi	Pressure (PI-100)
	feet	Water Level (LI-100)
clear/murky/muddy		Water Appearance
EW-6		
	gpm	Flow Rate (FI-300)
	psi	Pressure (PI-300)
	feet	Water Level (LI-300)
clear/murky/muddy		Water Appearance
EW-8		
	gpm	Flow Rate (FI-700)
	psi	Pressure (PI-700)
	feet	Water Level (LI-700)
clear/murky/muddy		Water Appearance
EW-9		
	gpm	Flow Rate (FI-200)
	psi	Pressure (PI-200)
	feet	Water Level (LI-200)
clear/murky/muddy		Water Appearance
EW-10		
	gpm	Flow Rate (FI-800)
	psi	Pressure (PI-800)
	feet	Water Level (LI-800)
clear/murky/muddy		Water Appearance

Steady State		
EW-5A		
	gpm	Flow Rate (FI-100)
	psi	Pressure (PI-100)
	feet	Water Level (LI-100)
clear/murky/muddy		Water Appearance
EW-6		
	gpm	Flow Rate (FI-300)
	psi	Pressure (PI-300)
	feet	Water Level (LI-300)
clear/murky/muddy		Water Appearance
EW-8		
	gpm	Flow Rate (FI-700)
	psi	Pressure (PI-700)
	feet	Water Level (LI-700)
clear/murky/muddy		Water Appearance
EW-9		
	gpm	Flow Rate (FI-200)
	psi	Pressure (PI-200)
	feet	Water Level (LI-200)
clear/murky/muddy		Water Appearance
EW-10		
	gpm	Flow Rate (FI-800)
	psi	Pressure (PI-800)
	feet	Water Level (LI-800)
clear/murky/muddy		Water Appearance

ATTACHMENT 1
LOOP 400 (BLOWER SYSTEM) TEST PROCEDURE
Rockaway Borough Groundwater Extraction and Treatment System

Date _____ Time _____

Initial/Sign Off

_____ 1. At SCADA HMI, place extraction wells and Process in "OFF" mode. At Blower Panel, place blower in "HAND" mode.
_____ 2. Verify correct flow (upward vertical through air stripper).
_____ 3. Place blower in "AUTO" mode.
_____ 4. Verify blower is not operating.
_____ 5. At SCADA HMI, place blower in "ON" mode.
_____ 6. After 30 minutes of operation, collect Extraction Well and System Data, below.
_____ 7. At SCADA HMI, place blower in "AUTO" mode.
_____ 8. Verify blower is not operating.
_____ 9. Continue operation in "AUTO" mode for remaining control loop tests.

Extraction Well Data

	EW-5A	EW-6	EW-8	EW-9	EW-10	Units
Status	H O A	H O A	H O A	H O A	H O A	Hand/Off/Auto
Frequency						Hertz
Level						inches
Flow						gal/min
Turbidity						NTUs

System Data

Flow (FI-400)		gal/min
Solenoid Status (HS-400)	O C	open/closed
Sump Status (YIC-500)	ON OFF	
Bag Filter dP (DPIT-400)		in-water
Air Stripper Blower Status (YIC-400)	ON OFF	
Air Stripper Pressure (PI-410)		in-water
Blower Line Vacuum (PI-420)		in-water
Blower Line Flow (FI-400)		scfm
Vent Heater Status (YR-550)	ON OFF	
Vent Heater Temperature (TIC-550)		˚F
Treated WaterDischarge Flow (FI-420)		gal/min
GAC Inlet Pressure (PI-430)		psig
GAC No. 1 Exhaust Pressure (PI-440)		psig
GAC No. 1 Exhaust Temperature (TI-460)		˚F
GAC No. 2 Exhaust Pressure (PI-450)		psig
GAC No. 2 Exhaust Temperature (TI-470)		˚F

Notes:
in = inches
gal = gallons
min = minutes

ATTACHMENT 1
LOOP 400 (BLOWER SYSTEM) TEST PROCEDURE
Rockaway Borough Groundwater Extraction and Treatment System

Check Offs / Sign Offs

_____	Panel Interface Terminations
_____	I/O Interface Terminations
_____	I/O Signal Operation
_____	I/O Operational
_____	Total Loop Operation
NA	Process controller scaling and adjustment

Comments: _____

ATTACHMENT 1
LOOP 999 (PROCESS ON/OFF) TEST PROCEDURE
Rockaway Borough Groundwater Extraction and Treatment System

Date _____ Time _____

Initial/Sign Off

_____ 1. Place blower and run enables for the heater and sump in "AUTO" mode. Do not place extraction well pumps in "AUTO" mode at this time.
_____ 2. Put Process in "ON" mode.
_____ 3. Operate 30 minutes and collect system data, below.
_____ 4. Continue operation for remaining control loop tests.

Extraction Well Data

	EW-5A	EW-6	EW-8	EW-9	EW-10	Units
Status	H O A	H O A	H O A	H O A	H O A	Hand/Off/Auto
Frequency						Hertz
Level						inches
Flow						gal/min
Turbidity						NTUs

System Data

Flow (FI-400)		gal/min
Solenoid Status (HS-400)	O C	open/closed
Sump Status (YIC-500)	ON OFF	
Bag Filter dP (DPIT-400)		in-water
Air Stripper Blower Status (YIC-400)	ON OFF	
Air Stripper Pressure (PI-410)		in-water
Blower Line Vacuum (PI-420)		in-water
Blower Line Flow (FI-400)		scfm
Vent Heater Status (YR-550)	ON OFF	
Vent Heater Temperature (TIC-550)		˚F
Treated Water Discharge Flow (FI-420)		gal/min
GAC Inlet Pressure (PI-430)		psig
GAC No. 1 Exhaust Pressure (PI-440)		psig
GAC No. 1 Exhaust Temperature (TI-460)		˚F
GAC No. 2 Exhaust Pressure (PI-450)		psig
GAC No. 2 Exhaust Temperature (TI-470)		˚F

Notes:
in = inches
gal = gallons
min = minutes

ATTACHMENT 1
LOOP 999 (PROCESS ON/OFF) TEST PROCEDURE
Rockaway Borough Groundwater Extraction and Treatment System

Check Offs / Sign Offs

_____	Panel Interface Terminations
_____	I/O Interface Terminations
_____	I/O Signal Operation
_____	I/O Operational
_____	Total Loop Operation
NA	Process controller scaling and adjustment

Comments: _____

ATTACHMENT 1
LOOP 100 (EXTRACTION WELL 5A PUMP) TEST PROCEDURE
Rockaway Borough Groundwater Extraction and Treatment System

Date _____ Time _____

Initial/Sign Off

_____ 1. Place blower and run enables for the heater and sump in "AUTO" mode. Place PROCESS (LOOP 999) in "ON" mode. At EW-5A VFD controller, place only EW-5A in "AUTO" mode.
_____ 2. Set minimum flow setpoint to gal/min and maximum to gal/min.
_____ 3. Operate pump from SCADA HMI at maximum flow.
_____ 4. After 15 minutes of operation, collect Extraction Well Data and System Data, below.
_____ 5. Continue operation for 24 hours. Collect Extraction Well Data and System data, below, each hour for 8 hours and after 24 hours.
_____ 6. Adjust flow to optimum flow rate from CDM and proceed to Loop 200 Test.

Extraction Well Data

	EW-5A	EW-6	EW-8	EW-9	EW-10	Units
Status	H O A	H O A	H O A	H O A	H O A	Hand/Off/Auto
Frequency						Hertz
Level						inches
Flow						gal/min
Turbidity						NTUs

System Data

Flow (FI-400)		gal/min
Solenoid Status (HS-400)	O C	open/closed
Sump Status (YIC-500)	ON OFF	
Bag Filter dP (DPIT-400)		in-water
Air Stripper Blower Status (YIC-400)	ON OFF	
Air Stripper Pressure (PI-410)		in-water
Blower Line Vacuum (PI-420)		in-water
Blower Line Flow (FI-400)		scfm
Vent Heater Status (YR-550)	ON OFF	
Vent Heater Temperature (TIC-550)		˚F
Treated Water Discharge Flow (FI-420)		gal/min
GAC Inlet Pressure (PI-430)		psig
GAC No. 1 Exhaust Pressure (PI-440)		psig
GAC No. 1 Exhaust Temperature (TI-460)		˚F
GAC No. 2 Exhaust Pressure (PI-450)		psig
GAC No. 2 Exhaust Temperature (TI-470)		˚F

Notes: in = inches
gal = gallons
min = minutes

ATTACHMENT 1
LOOP 100 (EXTRACTION WELL 5A PUMP) TEST PROCEDURE
Rockaway Borough Groundwater Extraction and Treatment System

Check Offs / Sign Offs

_____ Panel Interface Terminations
_____ I/O Interface Terminations
_____ I/O Signal Operation
_____ I/O Operational
_____ Total Loop Operation
_____ Process controller scaling and adjustment

Comments: _____
_____
_____
_____
_____

ATTACHMENT 1
LOOP 200 (EXTRACTION WELL 9 PUMP) TEST PRODCEDURE
Rockaway Borough Groundwater Extraction and Treatment System

Date _____ Time _____

Initial/Sign Off

_____ 1. Set minimum flow setpoint to gal/min and maximum to gal/min.
_____ 2. Operate pump from SCADA HMI at maximum flow.
_____ 3. After 15 minutes of operation, collect Extraction Well Data and System Data, below.
_____ 4. Continue operation for 24 hours. Collect Extraction Well Data and System data, below, each hour for 8 hours and after 24 hours.
_____ 5. Adjust flow to optimum flow rate from CDM and proceed to Loop 300 Test.

Extraction Well Data

	EW-5A	EW-6	EW-8	EW-9	EW-10	Units
Status	H O A	H O A	H O A	H O A	H O A	Hand/Off/Auto
Frequency						Hertz
Level						inches
Flow						gal/min
Turbidity						NTUs

System Data

Flow (FI-400)		gal/min
Solenoid Status (HS-400)	O C	open/closed
Sump Status (YIC-500)	ON OFF	
Bag Filter dP (DPIT-400)		in-water
Air Stripper Blower Status (YIC-400)	ON OFF	
Air Stripper Pressure (PI-410)		in-water
Blower Line Vacuum (PI-420)		in-water
Blower Line Flow (FI-400)		scfm
Vent Heater Status (YR-550)	ON OFF	
Vent Heater Temperature (TIC-550)		˚F
Treated Water Discharge Flow (FI-420)		gal/min
GAC Inlet Pressure (PI-430)		psig
GAC No. 1 Exhaust Pressure (PI-440)		psig
GAC No. 1 Exhaust Temperature (TI-460)		˚F
GAC No. 2 Exhaust Pressure (PI-450)		psig
GAC No. 2 Exhaust Temperature (TI-470)		˚F

Notes: in = inches
gal = gallons
min = minutes

ATTACHMENT 1
LOOP 200 (EXTRACTION WELL 9 PUMP) TEST PRODCEDURE
Rockaway Borough Groundwater Extraction and Treatment System

Check Offs / Sign Offs

_____ Panel Interface Terminations
_____ I/O Interface Terminations
_____ I/O Signal Operation
_____ I/O Operational
_____ Total Loop Operation
_____ Process controller scaling and adjustment

Comments: _____
_____
_____
_____
_____

ATTACHMENT 1
LOOP 300 (EXTRACTION WELL 6 PUMP) TEST PROCEDURE
Rockaway Borough Groundwater Extraction and Treatment System

Date _____ Time _____

Initial/Sign Off

_____ 1. Set minimum flow setpoint to gal/min and maximum to gal/min.
_____ 2. Operate pump from SCADA HMI at maximum flow.
_____ 3. After 15 minutes of operation, collect Extraction Well Data and System Data, below.
_____ 4. Continue operation for 24 hours. Collect Extraction Well Data and System data, below, each hour for 8 hours and after 24 hours.
_____ 5. Adjust flow to optimum flow rate from CDM and proceed to Loop 700 Test.

Extraction Well Data

	EW-5A	EW-6	EW-8	EW-9	EW-10	Units
Status	H O A	H O A	H O A	H O A	H O A	Hand/Off/Auto
Frequency						Hertz
Level						inches
Flow						gal/min
Turbidity						NTUs

System Data

Flow (FI-400)		gal/min
Solenoid Status (HS-400)	O C	open/closed
Sump Status (YIC-500)	ON OFF	
Bag Filter dP (DPIT-400)		in-water
Air Stripper Blower Status (YIC-400)	ON OFF	
Air Stripper Pressure (PI-410)		in-water
Blower Line Vacuum (PI-420)		in-water
Blower Line Flow (FI-400)		scfm
Vent Heater Status (YR-550)	ON OFF	
Vent Heater Temperature (TIC-550)		˚F
Treated Water Discharge Flow (FI-420)		gal/min
GAC Inlet Pressure (PI-430)		psig
GAC No. 1 Exhaust Pressure (PI-440)		psig
GAC No. 1 Exhaust Temperature (TI-460)		˚F
GAC No. 2 Exhaust Pressure (PI-450)		psig
GAC No. 2 Exhaust Temperature (TI-470)		˚F

Notes: in = inches
gal = gallons
min = minutes

ATTACHMENT 1
LOOP 300 (EXTRACTION WELL 6 PUMP) TEST PROCEDURE
Rockaway Borough Groundwater Extraction and Treatment System

Check Offs / Sign Offs

_____ Panel Interface Terminations
_____ I/O Interface Terminations
_____ I/O Signal Operation
_____ I/O Operational
_____ Total Loop Operation
_____ Process controller scaling and adjustment

Comments: _____
_____
_____
_____
_____

ATTACHMENT 1
LOOP 700 (EXTRACTION WELL 8 PUMP) TEST PROCEDURE
Rockaway Borough Groundwater Extraction and Treatment System

Date _____ Time _____

Initial/Sign Off

_____ 1. Set minimum flow setpoint to gal/min and maximum to gal/min.
_____ 2. Operate pump from SCADA HMI at maximum flow.
_____ 3. After 15 minutes of operation, collect Extraction Well Data and System Data, below.
_____ 4. Continue operation for 24 hours. Collect Extraction Well Data and System data, below, each hour for 8 hours and after 24 hours.
_____ 5. Adjust flow to optimum flow rate from CDM and proceed to Loop 800 Test.

Extraction Well Data

	EW-5A	EW-6	EW-8	EW-9	EW-10	Units
Status	H O A	H O A	H O A	H O A	H O A	Hand/Off/Auto
Frequency						Hertz
Level						inches
Flow						gal/min
Turbidity						NTUs

System Data

Flow (FI-400)		gal/min
Solenoid Status (HS-400)	O C	open/closed
Sump Status (YIC-500)	ON OFF	
Bag Filter dP (DPIT-400)		in-water
Air Stripper Blower Status (YIC-400)	ON OFF	
Air Stripper Pressure (PI-410)		in-water
Blower Line Vacuum (PI-420)		in-water
Blower Line Flow (FI-400)		scfm
Vent Heater Status (YR-550)	ON OFF	
Vent Heater Temperature (TIC-550)		˚F
Treated Water Discharge Flow (FI-420)		gal/min
GAC Inlet Pressure (PI-430)		psig
GAC No. 1 Exhaust Pressure (PI-440)		psig
GAC No. 1 Exhaust Temperature (TI-460)		˚F
GAC No. 2 Exhaust Pressure (PI-450)		psig
GAC No. 2 Exhaust Temperature (TI-470)		˚F

Notes: in = inches
gal = gallons
min = minutes

ATTACHMENT 1
LOOP 700 (EXTRACTION WELL 8 PUMP) TEST PROCEDURE
Rockaway Borough Groundwater Extraction and Treatment System

Check Offs / Sign Offs

_____ Panel Interface Terminations
_____ I/O Interface Terminations
_____ I/O Signal Operation
_____ I/O Operational
_____ Total Loop Operation
_____ Process controller scaling and adjustment

Comments: _____
_____
_____
_____
_____

ATTACHMENT 1
LOOP 700 (EXTRACTION WELL 10 PUMP) TEST PROCEDURE
Rockaway Borough Groundwater Extraction and Treatment System

Date _____ Time _____

Initial/Sign Off

_____ 1. Set minimum flow setpoint to gal/min and maximum to gal/min.
_____ 2. Operate pump from SCADA HMI at maximum flow.
_____ 3. After 15 minutes of operation, collect Extraction Well Data and System Data, below.
_____ 4. Continue operation for 24 hours. Collect Extraction Well Data and System data, below, each hour for 8 hours and after 24 hours.
_____ 5. Adjust flow to optimum flow rate from CDM and continue 14-day test.

Extraction Well Data

	EW-5A	EW-6	EW-8	EW-9	EW-10	Units
Status	H O A	H O A	H O A	H O A	H O A	Hand/Off/Auto
Frequency						Hertz
Level						inches
Flow						gal/min
Turbidity						NTUs

System Data

Flow (FI-400)		gal/min
Solenoid Status (HS-400)	O C	open/closed
Sump Status (YIC-500)	ON OFF	
Bag Filter dP (DPIT-400)		in-water
Air Stripper Blower Status (YIC-400)	ON OFF	
Air Stripper Pressure (PI-410)		in-water
Blower Line Vacuum (PI-420)		in-water
Blower Line Flow (FI-400)		scfm
Vent Heater Status (YR-550)	ON OFF	
Vent Heater Temperature (TIC-550)		˚F
Treated Water Discharge Flow (FI-420)		gal/min
GAC Inlet Pressure (PI-430)		psig
GAC No. 1 Exhaust Pressure (PI-440)		psig
GAC No. 1 Exhaust Temperature (TI-460)		˚F
GAC No. 2 Exhaust Pressure (PI-450)		psig
GAC No. 2 Exhaust Temperature (TI-470)		˚F

Notes: in = inches
gal = gallons
min = minutes

ATTACHMENT 1
LOOP 700 (EXTRACTION WELL 10 PUMP) TEST PROCEDURE
Rockaway Borough Groundwater Extraction and Treatment System

Check Offs / Sign Offs

_____ Panel Interface Terminations
_____ I/O Interface Terminations
_____ I/O Signal Operation
_____ I/O Operational
_____ Total Loop Operation
_____ Process controller scaling and adjustment

Comments: _____
_____
_____
_____
_____

ATTACHMENT 1
I/O Module Calibration Check and Sign Off
Rockaway Borough Groundwater Extraction and Treatment System

_____ Loop Number
_____ Component Tag Number of I/O Module Number
_____ Component Code Number Analog System
_____ Manufacturer of Analog System Element
_____ Model Number
_____ Serial Number

Summary of element function (include computing function, scale and range of function, output type [e.g. digital, analog, chart, etc.] and parameters of controllers [e.g. proportional, integral, derivative, reverse/forward acting, etc.])

_____
_____
_____
_____
_____
_____
_____

Test Data

Use direct measurement method to determine input (actual) value, such as water level measurement, bucket test results for flow, hot-wire velocity readings for air flow, etc.

	0%	10%	50%	100%
Input Value				
Output Value				

Note: For 2-state devices such as switches, mark out the 10% and 50% blocks and input data at 0% and 100%.

Comments

_____
_____
_____
_____
_____
_____
_____

Contractor Sign Off

_____
Name (Print)

_____ _____
Signature Date

ATTACHMENT 2
ROCKAWAY STARTUP TESTING CHECKLISTS

14 Day Operational Checklist

Circle DAY 1	DAY 2	DAY 3	DAY 4	DAY 5
_____	Test _____ at anticipated flow rate			
_____	Collect Influent Sample. Sample ID:			_____
_____	Collect field parameters for Influent			
	_____	DO		
	_____	ORP		
	_____	pH		
	_____	Conductivity		
	_____	Temperature		
_____	Collect several water level measurements for well in vicinity of GWTF			
	_____	water level	PZ-5	
	_____	water level	RBW-11	
	_____	water level	RBW-2	
	_____	water level	PZ-10A	
	_____	water level	PZ-10B	
	_____	water level	PZ-10C	
	_____	water level	PZ-7	
	_____	water level	PZ-8	
	_____	water level	MW-1R	
	_____	water level	MW-1A	
	_____	water level	RBW-1A	
	_____	water level	EW-5	
	_____	water level	PZ-9A	
	_____	water level	PZ-9B	
	_____	water level	PZ-9C	
_____	Establish level control range for _____ at design pumping rate			
	_____	level control range		
	Test Sump System? (test once per 14 day tests)			

Notes:
EW-5A will be tested on Day 1, EW-8 will be tested on Day 2,
EW-9 will be tested on Day 3, EW-10 will be tested on Day 4,
and EW-6 will be tested on Day 5.

ATTACHMENT 2
ROCKAWAY STARTUP TESTING CHECKLISTS

14 Day Operational Checklist

Circle

DAY 6 DAY 7 DAY 8 DAY 9 DAY 10

DAY 11 DAY 12 DAY 13 DAY 14

_____ Test GWTF at anticipated flow rate

_____ *Collect GWTF Influent Sample. Sample ID: _____

_____ *Collect GWTF Effluent Sample. Sample ID: _____

_____ Collect field parameters for Influent (daily)

- _____ DO
- _____ ORP
- _____ pH
- _____ Conductivity
- _____ Temperature

_____ Collect field parameters for Effluent (daily)

- _____ DO
- _____ ORP
- _____ pH
- _____ Conductivity
- _____ Temperature

_____ Collect water level measurements for well in vicinity of GWTF (daily)

- _____ water level PZ-5
- _____ water level RBW-11
- _____ water level RBW-2
- _____ water level PZ-10A
- _____ water level PZ-10B
- _____ water level PZ-10C
- _____ water level PZ-7
- _____ water level PZ-8
- _____ water level MW-1R
- _____ water level MW-1A
- _____ water level RBW-1A
- _____ water level EW-5
- _____ water level PZ-9A
- _____ water level PZ-9B
- _____ water level PZ-9C

monitor level control range for GWTF wells at design pumping rate

- _____ EW-5A level ok?
- _____ EW-6 level ok?
- _____ EW-8 level ok?
- _____ EW-9 level ok?
- _____ EW-10 level ok?

*Collect only one sample for the week

ATTACHMENT 2
ROCKAWAY STARTUP TESTING CHECKLISTS

14 Day Operational Checklist - Continued

Circle

DAY 6 DAY 7 DAY 8 DAY 9 DAY 10

DAY 11 DAY 12 DAY 13 DAY 14

_____ Collect vapor flow rates through VPGACs (daily)

_____ VPGAC 1

_____ VPGAC 2

_____ Collect PID readings at VPGACs effluent for (daily):

_____ Total VOCs

_____ HAPs

_____ PCE

_____ *Collect Operating VOC Control Efficiency

_____ VOC prior to lead GAC

_____ VOC prior to lag GAC

_____ VOC at stack

_____ Test Sump System? (test once per 14 day tests)

*Collect only one sample for the week

ATTACHMENT 2
ROCKAWAY STARTUP TESTING CHECKLISTS

48 Hour Test Checklist

DAY 1

_____ Test GWTF at anticipated flow rate
_____ Collect GWTF Influent Sample. Sample ID: _____
_____ Collect GWTF Effluent Sample. Sample ID: _____
_____ Collect field parameters for GWTF Influent
- _____ DO
- _____ ORP
- _____ pH
- _____ Conductivity
- _____ Temperature

_____ Collect field parameters for GWTF Effluent
- _____ DO
- _____ ORP
- _____ pH
- _____ Conductivity
- _____ Temperature

_____ Collect water level measurements for well in vicinity of GWTF
- _____ water level PZ-5
- _____ water level RBW-11
- _____ water level RBW-2
- _____ water level PZ-10A
- _____ water level PZ-10B
- _____ water level PZ-10C
- _____ water level PZ-7
- _____ water level PZ-8
- _____ water level MW-1R
- _____ water level MW-1A
- _____ water level RBW-1A
- _____ water level EW-5
- _____ water level PZ-9A
- _____ water level PZ-9B
- _____ water level PZ-9C

_____ Collect vapor flow rates through VPGACs (daily):
- _____ VPGAC 1
- _____ VPGAC 2

_____ Collect PID readings at VPGACs effluent for (daily):
- _____ Total VOCs
- _____ HAPs
- _____ PCE

ATTACHMENT 2
ROCKAWAY STARTUP TESTING CHECKLISTS

48 Hour Test Checklist

DAY 1 Continued

_____ Collect Operating VOC Control Efficiency (once per week)
- _____ VOC prior to lead GAC
- _____ VOC prior to lag GAC
- _____ VOC at stack

_____ Collect EW-5A Sample. Sample ID:

_____ Collect field parameters for EW-5A
- _____ DO
- _____ ORP
- _____ pH
- _____ Conductivity
- _____ Temperature

_____ Collect EW-6 Sample. Sample ID:

_____ Collect field parameters for EW-6
- _____ DO
- _____ ORP
- _____ pH
- _____ Conductivity
- _____ Temperature

_____ Collect EW-8 Sample. Sample ID:

_____ Collect field parameters for EW-8
- _____ DO
- _____ ORP
- _____ pH
- _____ Conductivity
- _____ Temperature

_____ Collect EW-9 Sample. Sample ID:

_____ Collect field parameters for EW-9
- _____ DO
- _____ ORP
- _____ pH
- _____ Conductivity
- _____ Temperature

_____ Collect EW-10 Sample. Sample ID:

_____ Collect field parameters for EW-10
- _____ DO
- _____ ORP
- _____ pH
- _____ Conductivity
- _____ Temperature

ATTACHMENT 2
ROCKAWAY STARTUP TESTING CHECKLISTS

48 Hour Test Checklist

DAY 2

_____ Test GWTF at anticipated flow rate
_____ Collect GWTF Influent Sample. Sample ID: _____
_____ Collect GWTF Effluent Sample. Sample ID: _____
_____ Collect field parameters for GWTF Influent
- _____ DO
- _____ ORP
- _____ pH
- _____ Conductivity
- _____ Temperature

_____ Collect field parameters for GWTF Effluent
- _____ DO
- _____ ORP
- _____ pH
- _____ Conductivity
- _____ Temperature

_____ Collect water level measurements for well in vicinity of GWTF
- _____ water level PZ-5
- _____ water level RBW-11
- _____ water level RBW-2
- _____ water level PZ-10A
- _____ water level PZ-10B
- _____ water level PZ-10C
- _____ water level PZ-7
- _____ water level PZ-8
- _____ water level MW-1R
- _____ water level MW-1A
- _____ water level RBW-1A
- _____ water level EW-5
- _____ water level PZ-9A
- _____ water level PZ-9B
- _____ water level PZ-9C

_____ Collect vapor flow rates through VPGACs (daily):
- _____ VPGAC 1
- _____ VPGAC 2

_____ Collect PID readings at VPGACs effluent for (daily):
- _____ Total VOCs
- _____ HAPs
- _____ PCE

ATTACHMENT 2
ROCKAWAY STARTUP TESTING CHECKLISTS

48 Hour Test Checklist

DAY 2 Continued

_____ Collect Operating VOC Control Efficiency (once per week)
- _____ VOC prior to lead GAC
- _____ VOC prior to lag GAC
- _____ VOC at stack

_____ Collect EW-5A Sample. Sample ID:

_____ Collect EW-5A water level

_____ Note if water level has fluctuated since Day 1

_____ Collect field parameters for EW-5A
- _____ DO
- _____ ORP
- _____ pH
- _____ Conductivity
- _____ Temperature

_____ Collect EW-6 Sample. Sample ID:

_____ Collect EW-6 water level

_____ Note if water level has fluctuated since Day 1

_____ Collect field parameters for EW-6
- _____ DO
- _____ ORP
- _____ pH
- _____ Conductivity
- _____ Temperature

_____ Collect EW-8 Sample. Sample ID:

_____ Collect EW-8 water level

_____ Note if water level has fluctuated since Day 1

_____ Collect field parameters for EW-8
- _____ DO
- _____ ORP
- _____ pH
- _____ Conductivity
- _____ Temperature

_____ Collect EW-9 Sample. Sample ID:

_____ Collect EW-9 water level

_____ Note if water level has fluctuated since Day 1

_____ Collect field parameters for EW-9
- _____ DO
- _____ ORP
- _____ pH
- _____ Conductivity
- _____ Temperature

ATTACHMENT 2
ROCKAWAY STARTUP TESTING CHECKLISTS

48 Hour Test Checklist

DAY 2 Continued

_____ Collect EW-10 Sample. Sample ID:

_____ Collect EW-10 water level

_____ Note if water level has fluctuated since Day 1

_____ Collect field parameters for EW-10

- _____ DO
- _____ ORP
- _____ pH
- _____ Conductivity
- _____ Temperature

ATTACHMENT 3
ROCKAWAY STARTUP 14-DAY OPERATIONAL TESTING FORM

CIRCLE
DAY 1 DAY 2 DAY 3 DAY 4 DAY 5

EXTRACTION WELL		
	gpm	Anticipated Flow Rate
Extraction Well Measurements		
	gpm	EW-_____ Flow Rate (FI-__00)
	feet	EW-_____ Water Level (LI-__00)
	psi	EW-_____ Pressure (PI-__00)
Sample Collection		
	time	Influent Sample ID:
Extracted Groundwater Field Parameters		
	mg/L	DO
	mV	ORP
	SU	pH
	umhos/cm	Conductivity
	°C	Temperature
Water Level Measurements - Sentry Wells		
	ft bgs	PZ-5
	ft bgs	RBW-11
	ft bgs	RBW-2
	ft bgs	PZ-10A
	ft bgs	PZ-10B
	ft bgs	PZ-10C
	ft bgs	PZ-7
	ft bgs	PZ-8
	ft bgs	MW-1R
	ft bgs	MW-1A
	ft bgs	RBW-1A
	ft bgs	EW-5
	ft bgs	PZ-9A
	ft bgs	PZ-9B
	ft bgs	PZ-9C

EXTRACTION WELL - Continued		
Level Control Range		
	gpm	Pumping Rate
	Units	level control
	Units	level control
TREATMENT SYSTEM MEASUREMENTS		
Blower to Heater Readings		
	°F	Temperature (TI-400)
	psi	Pressure (PI-400)
Heater to VPGAC Units Readings		
	psi	Pressure (PI-430)
VPGAC 1		
	°F	Temperature (TI-460)
	cfm	Pressure (PI-440)
VPGAC 2		
	°F	Temperature (TI-470)
	cfm	Pressure (PI-450)
Air Stripper Water		
	psi	Pressure (PI-410)
Air Stripper Vapor		
	psi	Pressure (PI-420)
	cfm	Flow (FI-400)
Air Stripper Discharge		
	gpm	Flow (FI-420)
Bag Filter		
	in-WC	Differential Pressure (DP-400)
SUMP SYSTEM		
	Sump pump, controls, and switches properly function? Test once during 14 day tests.	

NOTES:
EW-5A will be tested on Day 1, EW-9 will be tested on Day 2, EW-8 will be tested on Day 3, EW-10 will be tested on Day 4, and EW-6 will be tested on Day 5.

ATTACHMENT 3
ROCKAWAY STARTUP 14-DAY OPERATIONAL TESTING FORM

CIRCLE

DAY 6	DAY 7	DAY 8	DAY 9	DAY 10
EXTRACTION WELLS				
EW-5A				
	gpm	Flow Rate (FI-100)		
	feet	Water Level (LI-100)		
	psi	Pressure (PI-100)		
		Level Control Range		
		Level Control Range		
EW-6				
	gpm	Flow Rate (FI-300)		
	feet	Water Level (LI-300)		
	psi	Pressure (PI-300)		
		Level Control Range		
		Level Control Range		
EW-8				
	gpm	Flow Rate (FI-700)		
	feet	Water Level (LI-700)		
	psi	Pressure (PI-700)		
		Level Control Range		
		Level Control Range		
EW-9				
	gpm	Flow Rate (FI-200)		
	feet	Water Level (LI-200)		
	psi	Pressure (PI-200)		
		Level Control Range		
		Level Control Range		
EW-10				
	gpm	Flow Rate (FI-800)		
	feet	Water Level (LI-800)		
	psi	Pressure (PI-800)		
		Level Control Range		
		Level Control Range		
Water Level Measurements - Sentry Wells				
	ft bgs	PZ-5		
	ft bgs	RBW-11		
	ft bgs	RBW-2		
	ft bgs	PZ-10A		
	ft bgs	PZ-10B		
	ft bgs	PZ-10C		
	ft bgs	PZ-7		
	ft bgs	PZ-8		
	ft bgs	MW-1R		
	ft bgs	MW-1A		
	ft bgs	RBW-1A		
	ft bgs	EW-5		
	ft bgs	PZ-9A		
	ft bgs	PZ-9B		
	ft bgs	PZ-9C		
AIR PERMIT MONITORING				
Permit Flow Rate Monitoring[1]				
	cfm	Flow Rate (1 min. intervals)		
	cfm	Flow Rate (1 min. intervals)		
	cfm	Flow Rate (1 min. intervals)		

DAY 11	DAY 12	DAY 13	DAY 14
Effluent PID Readings			
	ppm	Total VOCs	
	ppm	HAPs	
	ppm	PCE	
Removal Efficiency Testing[2]			
	ppm	Total VOCs (before lead vessel)	
	ppm	Total VOCs (before lag vessel)	
	ppm	Total VOCs (at stack)	
TREATMENT SYSTEM			
	gpm	Anticipated Flow Rate	
Sample Collection			
	time	Influent Sample ID:	
	time	Effluent Sample ID:	
Influent Field Parameters			
	mg/L	DO	
	mV	ORP	
	SU	pH	
	umhos/cm	Conductivity	
	°C	Temperature	
Effluent Field Parameters			
	mg/L	DO	
	mV	ORP	
	SU	pH	
	umhos/cm	Conductivity	
	°C	Temperature	
TREATMENT SYSTEM MEASUREMENTS			
Blower to Heater Readings			
	°F	Temperature (TI-400)	
	psi	Pressure (PI-400)	
Heater to VPGAC Units Readings			
	psi	Pressure (PI-430)	
VPGAC 1			
	°F	Temperature (TI-460)	
	cfm	Pressure (PI-440)	
VPGAC 2			
	°F	Temperature (TI-470)	
	cfm	Pressure (PI-450)	
Air Stripper Water			
	psi	Pressure (PI-410)	
Air Stripper Vapor			
	psi	Pressure (PI-420)	
	cfm	Flow (FI-400)	
Air Stripper Discharge			
	gpm	Flow (FI-420)	
Bag Filter			
	in-WC	Differential Pressure (DP-400)	

NOTES:

(1) Permit Flow Rate Monitoring - feed/flow monitoring continuously based on 1 minute intervals

(2) Collect efficiency PID readings on Day 6, Day 7, and any day between Day 7 and Day 12, and then Day 13. After Day 13 collect weekly.

ATTACHMENT 3

ROCKAWAY STARTUP 14-DAY OPERATIONAL TESTING FORM

Day 1 Monitoring Well and Piezometer Water Level Measurements

MW/PZ ID	Level (ft bgs)	Time	Level (ft bgs)	Time	Level (ft bgs)	Time	Level (ft bgs)	Time	Level (ft bgs)	Time
PZ-5										
RBW-11*										
RBW-2*										
PZ-10A										
PZ-10B*										
PZ-10C										
PZ-7*										
PZ-8										
MW-1R										
MW-1A										
RBW-1A*										
EW-5*										
PZ-9A										
PZ-9B										
PZ-9C										

Notes:
MW - Monitoring Well
PZ - Piezometer
* - Monitoring well or piezometer has a transducer

ATTACHMENT 4
ROCKAWAY STARTUP 48 HOUR PERFORMANCE TESTING FORM

DAY 1

TREATMENT SYSTEM		
	gpm	Anticipated Flow Rate
	gpm	Actual Flow Rate
Sample Collection		
	time	GWTF Influent ID:
	time	GWTF Effluent ID:
Influent Field Parameters		
	mg/L	DO
	mV	ORP
	SU	pH
	umhos/cm	Conductivity
	°C	Temperature
Effluent Field Parameters		
	mg/L	DO
	mV	ORP
	SU	pH
	umhos/cm	Conductivity
	°C	Temperature
Water Level Measurements - Sentry Wells		
	ft bgs	PZ-5
	ft bgs	RBW-11
	ft bgs	RBW-2
	ft bgs	PZ-10A
	ft bgs	PZ-10B
	ft bgs	PZ-10C
	ft bgs	PZ-7
	ft bgs	PZ-8
	ft bgs	MW-1R
	ft bgs	MW-1A
	ft bgs	RBW-1A
	ft bgs	EW-5
	ft bgs	PZ-9A
	ft bgs	PZ-9B
	ft bgs	PZ-9C
AIR PERMIT MONITORING		
Permit Flow Rate Monitoring(1)		
	cfm	Flow Rate (1 min. intervals)
	cfm	Flow Rate (1 min. intervals)
	cfm	Flow Rate (1 min. intervals)
Effluent PID Readings		
	ppm	Total VOCs
	ppm	HAPs
	ppm	PCE
Removal Efficiency Testing(2)		
	ppm	Total VOCs (before lead vessel)
	ppm	Total VOCs (before lag vessel)
	ppm	Total VOCs (at stack)

NOTES:
(1) Permit Flow Rate Monitoring - feed/flow monitoring continuously based on 1 minute intervals
(2) Collect efficiency PID readings on a weekly basis after the 14-day operational testing for 7 weeks.

EXTRACTION WELLS		
EW-5A		
Sample Collection		
	time	Sample ID:
Extracted Water Field Parameters		
	mg/L	DO
	mV	ORP
	SU	pH
	umhos/cm	Conductivity
	°C	Temperature
EW-6		
Sample Collection		
	time	Sample ID:
Extracted Water Field Parameters		
	mg/L	DO
	mV	ORP
	SU	pH
	umhos/cm	Conductivity
	°C	Temperature
EW-8		
Sample Collection		
	time	Sample ID:
Extracted Water Field Parameters		
	mg/L	DO
	mV	ORP
	SU	pH
	umhos/cm	Conductivity
	°C	Temperature
EW-9		
Sample Collection		
	time	Sample ID:
Extracted Water Field Parameters		
	mg/L	DO
	mV	ORP
	SU	pH
	umhos/cm	Conductivity
	°C	Temperature
EW-10		
Sample Collection		
	time	Sample ID:
Extracted Water Field Parameters		
	mg/L	DO
	mV	ORP
	SU	pH
	umhos/cm	Conductivity
	°C	Temperature

ATTACHMENT 4
ROCKAWAY STARTUP 48 HOUR PERFORMANCE TESTING FORM

DAY 2

TREATMENT SYSTEM		
	gpm	Anticipated Flow Rate
	gpm	Actual Flow Rate
Sample Collection		
	time	GWTF Influent ID:
	time	GWTF Effluent ID:
Influent Field Parameters		
	mg/L	DO
	mV	ORP
	SU	pH
	umhos/cm	Conductivity
	°C	Temperature
Effluent Field Parameters		
	mg/L	DO
	mV	ORP
	SU	pH
	umhos/cm	Conductivity
	°C	Temperature
Water Level Measurements - Sentry Wells		
	ft bgs	PZ-5
	ft bgs	RBW-11
	ft bgs	RBW-2
	ft bgs	PZ-10A
	ft bgs	PZ-10B
	ft bgs	PZ-10C
	ft bgs	PZ-7
	ft bgs	PZ-8
	ft bgs	MW-1R
	ft bgs	MW-1A
	ft bgs	RBW-1A
	ft bgs	EW-5
	ft bgs	PZ-9A
	ft bgs	PZ-9B
	ft bgs	PZ-9C
AIR PERMIT MONITORING		
Permit Flow Rate Monitoring(1)		
	cfm	Flow Rate (1 min. intervals)
	cfm	Flow Rate (1 min. intervals)
	cfm	Flow Rate (1 min. intervals)
Effluent PID Readings		
	ppm	Total VOCs
	ppm	HAPs
	ppm	PCE
Removal Efficiency Testing(2)		
	ppm	Total VOCs (before lead vessel)
	ppm	Total VOCs (before lag vessel)
	ppm	Total VOCs (at stack)

NOTES:
(1) Permit Flow Rate Monitoring - feed/flow monitoring continuously based on 1 minute intervals
(2) Collect efficiency PID readings on a weekly basis after the 14-day operational testing for 7 weeks.

EXTRACTION WELLS		
EW-5A		
Sample Collection		
	time	Sample ID:
	ft bgs	Water Level
	Water level fluctuating? Y/N	
Extracted Groundwater Field Parameters		
	mg/L	DO
	mV	ORP
	SU	pH
	umhos/cm	Conductivity
	°C	Temperature
EW-6		
Sample Collection		
	time	Sample ID:
	ft bgs	Water Level
	Water level fluctuating? Y/N	
Extracted Groundwater Field Parameters		
	mg/L	DO
	mV	ORP
	SU	pH
	umhos/cm	Conductivity
	°C	Temperature
EW-8		
Sample Collection		
	time	Sample ID:
	ft bgs	Water Level
	Water level fluctuating? Y/N	
Extracted Groundwater Field Parameters		
	mg/L	DO
	mV	ORP
	SU	pH
	umhos/cm	Conductivity
	°C	Temperature
EW-9		
Sample Collection		
	time	Sample ID:
	ft bgs	Water Level
	Water level fluctuating? Y/N	
Extracted Groundwater Field Parameters		
	mg/L	DO
	mV	ORP
	SU	pH
	umhos/cm	Conductivity
	°C	Temperature
EW-10		
Sample Collection		
	time	Sample ID:
	ft bgs	Water Level
	Water level fluctuating? Y/N	
Extracted Groundwater Field Parameters		
	mg/L	DO
	mV	ORP
	SU	pH
	umhos/cm	Conductivity
	°C	Temperature

SUBMITTAL REGISTER (ER 415-1-10)

TITLE AND LOCATION: Rockaway Wellfield Superfund Site, EM/WS,Rockaway Borough, East Main/Wall Street, Morris County, NJ

DATE: 15 Aug 2012

CONTRACTOR: CAPE Environmental Management Inc.

CONTRACT NUMBER: W912DQ-05-D-0001 0005

ACTIVITY No.	TRANS-MITTAL No.	ITEM No.	SPEC PARAGRAPH No.	DESCRIPTION OF SUBMITTAL	TYPE OF SUBMITTAL	CLASSI-FICATION FIO GA, DA or CR	CONTRACTOR REVIEWER	CONTRACTOR SCHEDULE DATES SUBMIT NEEDED BY	APPROVAL NEEDED BY	MATERIAL NEEDED BY	CONTRACTOR ACTION CODE	CORPS RECEIVED DATE	GOVERNMENT ACTION CODE	CORPS RETURNED DATE
SECTION - 01 32 01.00 10			**PROJECT SCHEDULE**											
	4	2	01 32 01.00 10	Schedule Update 004		DA/CR					A	13 Apr 10	B	29 Apr 10
SECTION - 01060			**Regulatory Requirements**											
	1.1	1	01060	Well Head Protection Waiver Letter	RECORDS	FIO		25 May 06	25 May 06	25 May 06	A	02 Aug 10	F	12 Aug 10
SECTION - 01170			**Special Project Provisions**											
A3340	1	2	01170 1.07B	Valve Tags	PRODUCT DATA	FIO	SysAdmin	29 Jun 11	29 Jun 11	09 Jul 11	A	14 Dec 11	F	21 Dec 11
A2290		3	01170 1.08	Noise Level Data	DESIGN DATA	FIO		08 Aug 11	08 Aug 11	08 Aug 11				
	2	6	01170 N/A	Building Construction Inspection Tags	RECORDS	FIO	SysAdmin				A	13 Jan 11	F	20 Jan 12
	3	7	01170 N/A	Construction Completion Certificate	CERTIFICATES	FIO	SysAdmin				A	06 Feb 12	F	08 Feb 12
SECTION - 01172			**Pipe Penetrations**											
A2620	1	1	01172 1.02	Link Seal Information	PRODUCT DATA	FIO	mdl	22 Feb 11	22 Feb 11	22 Feb 11	A	14 Feb 11	F	14 Feb 11
SECTION - 01201			**Pre-Construction & Pre-Work Conferences**											
A0120		1	01201 1.5 E	Pre-Construction Mtg Minutes	PRODUCT DATA	GA	mdl							
		2	01201 1.20	Pre-Work Mtg Minutes		GA								
		3	01201 1.30	Pre-Construction QC Mtg Minutes		GA								
		4	01201 1.30	Pre-Construction Safety Mtg Minutes		GA								
		5	01201 1.5.1	Conference Meeting Minutes	PRODUCT DATA	GA								
SECTION - 01202			**Progress Meetings**											
0001	1	1	01202 1.3.1	Progress Meeting Minutes 001	PRODUCT DATA	GA	mdl	23 Oct 10	22 Nov 10	22 Nov 10	A	20 Aug 07	A	29 May 07
	2	2	01202 1.3.1	Progress Meeting Minutes 002	PRODUCT DATA	GA	mdl				A	20 Aug 07	B	05 Jun 07
	3	3	01202 1.3.1	Progress Meeting Minutes 003	PRODUCT DATA	GA	mdl				A	20 Aug 07	B	05 Jun 07
	4	4	01202 1.3.1	Progress Meeting Minutes 004	PRODUCT DATA	GA					A	20 Aug 07	A	12 Jun 07
	5	5	01202 1.3.1	Progress Meeting Minutes 005	PRODUCT DATA	GA	mdl				A	20 Aug 07	A	20 Jun 07
	6	6	01202 1.3.1	Progress Meeting Minutes 006	PRODUCT DATA	GA					A	20 Aug 07	A	09 Jul 07
	7	7	01202 1.3.1	Progress Meeting Minutes 007	PRODUCT DATA	GA	mdl				A	20 Aug 07	A	09 Jul 07
	8	8	01202 1.3.1	Progress Meeting Minutes 008	PRODUCT DATA	GA	mdl				A	20 Aug 07	A	09 Jul 07
	9	9	01202 1.3.1	Progress Meeting Minutes 009	PRODUCT DATA	GA	mdl				A	20 Aug 07	A	02 Aug 07
	104.1	10	01202 1.3.1	Progress Meeting Minutes 010	PRODUCT DATA	GA	mdl				A	08 Nov 11	A	15 Nov 11
	11	11	01202 1.3.1	Progress Meeting Minutes 011	PRODUCT DATA	GA	mdl				A	20 Aug 07	A	13 Aug 07
	12	12	01202	Progress Meeting Minutes 012	PRODUCT DATA	GA	mdl				A	23 Aug 07	A	14 Aug 07
	13	13	01202 1.3.1	Progress Meeting Minutes 013	PRODUCT DATA	GA	mdl				A	23 Aug 07	A	21 Aug 07
	14	14	01202 1.3.1	Progress Meeting Minutes 014	PRODUCT DATA	GA	mdl				A	29 Aug 07	A	28 Aug 07
	15	15	01202 1.3.1	Progress Meeting Minutes 015	PRODUCT DATA	GA	mdl				A	05 Sep 07	A	05 Sep 07
	20.1	16	01202 1.3.1	Progress Meeting Minutes 016	PRODUCT DATA	GA	mdl				A	08 Nov 11	A	15 Nov 11
	20.2	17	01202 1.3.1	Progress Meeting Minutes 017	PRODUCT DATA	GA	mdl				A	08 Nov 11	A	15 Nov 11

RANGE : ALL

SORT : SECTION & ITEM

SUBMITTAL REGISTER (ER 415-1-10)

TITLE AND LOCATION: Rockaway Wellfield Superfund Site, EM/WS,Rockaway Borough, East Main/Wall Street, Morris County, NJ

DATE: 15 Aug 2012

CONTRACTOR: CAPE Environmental Management Inc.

CONTRACT NUMBER: W912DQ-05-D-0001 0005

ACTIVITY No.	TRANS-MITTAL No.	ITEM No.	SPEC PARAGRAPH No.	DESCRIPTION OF SUBMITTAL	TYPE OF SUBMITTAL	CLASSI-FICATION FIO GA, DA or CR	CONTRACTOR REVIEWER	CONTRACTOR SCHEDULE DATES: SUBMIT NEEDED BY	APPROVAL NEEDED BY	MATERIAL NEEDED BY	CONTRACTOR ACTION: CODE	CORPS RECEIVED DATE	GOVERNMENT ACTION: CODE	CORPS RETURNED DATE
	18	18	01202	Progress Meeting Minutes 018	PRODUCT DATA	GA	mdl				A	21 Sep 07	A	27 Sep 07
	19	19	01202 1.3.1	Progress Meeting Minutes 019	PRODUCT DATA	GA	mdl				A	03 Oct 10	A	03 Oct 07
	21	20	01202 1.3.1	Progress Meeting Minutes 020	PRODUCT DATA	GA	mdl				A	10 Oct 07	A	23 Oct 07
	22	21	01202 1.3.1	Progress Meeting Minutes 021	PRODUCT DATA	GA	mdl				A	16 Oct 07	A	23 Oct 07
	23	22	01202 1.3.1	Progress Meeting Minutes 022	PRODUCT DATA	GA	mdl				A	28 Oct 07	A	31 Oct 07
	24	23	01202 1.3.1	Progress Meeting Minutes 023	PRODUCT DATA	GA	mdl				A	15 Nov 07	A	31 Oct 07
	25	24	01202 1.3.1	Progress Meeting Minutes 024	PRODUCT DATA	GA	mdl				A	15 Nov 07	G	02 Feb 11
	26	25.1	01202 1.3.1	Progress Meeting Minutes 024R1	PRODUCT DATA	GA	mdl				A	29 Nov 07	A	29 Nov 07
	27	26	01202	Progress Meeting Minutes 025	PROGRESS RPTS	GA	mdl				A	29 Nov 07	A	29 Nov 07
	28	27	01202	Progress Meeting Minutes 026	PRODUCT DATA	GA	mdl				A	12 Dec 07	A	19 Dec 07
	29	28	01202	Minutes fr/ Mod 5 Proposal Conference		GA	mdl				A	18 Jan 08	F	04 Feb 08
	30	29	01202	Minutes for NJDEP mtg re: SDWS		GA	mdl				A	27 Feb 08	F	29 Feb 08
	31	30	01202	Progress Meeting Minutes 027	PRODUCT DATA	GA	mdl				A	18 Jan 08	A	04 Feb 08
A0110	32	31	01202	Progress Meeting Minutes #28	PROGRESS RPTS	GA	mdl				A	04 Feb 08	A	04 Feb 08
A0110	33	32	01202	Progress Meeting Minutes #29	PROGRESS RPTS	GA	mdl				A	21 Feb 08	A	21 Feb 08
	34	33	01202	Progress Meeting Minutes 030	PRODUCT DATA	GA	mdl				A	19 Mar 08	A	29 Apr 08
	35	34	01202	Progress Meeting Minutes 031	PRODUCT DATA	GA	mdl				A	29 Apr 08	A	29 Apr 08
	36	35	01202	Progress Meeting Minutes 032	PRODUCT DATA	GA	mdl				A	29 Apr 08	A	29 Apr 08
	37	36	01202	Progress Meeting Minutes 033	PRODUCT DATA	GA	mdl				A	16 May 08	A	16 May 08
	38	37	01202	Piezometer Site Walk Minutes	PRODUCT DATA	GA	mdl				A	13 Jun 08	G	02 Feb 11
	39	38	01202	Piezometer Scoping Discussion Minutes	PRODUCT DATA	GA	mdl				A	17 Jun 08	G	02 Feb 11
	40	39	01202	Progress Meeting Minutes 034	PRODUCT DATA	GA					A	25 Jun 10	A	25 Jun 10
	41	40	01202 1.3.1	Re-start Kickoff Meeting, Revised	PRODUCT DATA	GA	mdl				A	12 Aug 10	B	12 Aug 10
	42	41	01202 1.3.1	Zero Net Fill Meeting Minutes	PRODUCT DATA	GA	mdl				A	12 Aug 10	A	16 Aug 10
	43	42	01202 1.3.1	Borough Meeting Pre Design Minutes	PRODUCT DATA	GA	mdl				A	12 Aug 10	A	16 Aug 10
	44	43	01202 1.3.1	CDM / HDR Conference Call Minutes	PRODUCT DATA	GA	mdl				A	12 Aug 10	B	27 Sep 10
	45	44	01202 1.3.1	Extraction Well Design Meeting Minutes	PRODUCT DATA	GA	mdl				A	23 Sep 10	F	27 Sep 10
	46	45	01202 1.3.1	Boro of Rockaway Mtg Minutes 26AUG10	PROGRESS RPTS	DA/CR	mdl				A	16 Sep 10	A	27 Sep 10
	47	46	01202 1.6	Progress Meeting Minutes 036	PROGRESS RPTS	DA/CR					A	08 Sep 10	A	10 Sep 10
	48	47	01202 1.6	Progress Meeting Minutes 037	PROGRESS RPTS	DA/CR					A	27 Sep 10	A	27 Sep 10
	49	48	01202 1.6	Progress Meeting Minutes 038	PROGRESS RPTS	DA/CR					A	28 Sep 10	A	28 Sep 10
	50	49	01202 1.6	Progress Meeting Minutes 035	PROGRESS RPTS	FIO					A	28 Sep 10	F	05 Oct 10
	51	50	01202 1.6	Progress Meeting 039	PROGRESS RPTS	DA/CR					A	21 Oct 10	A	26 Oct 10
	52	51	01202 1.6	I&C Presentation Meeting Minutes	PROGRESS RPTS	GA					A	10 Oct 10	A	15 Nov 10
	53	52	01202 1.6	Progress Meeting Minutes 040	PROGRESS RPTS	GA					A	15 Nov 10	A	15 Nov 10

RANGE : ALL

SORT : SECTION & ITEM

SUBMITTAL REGISTER (ER 415-1-10)

TITLE AND LOCATION: Rockaway Wellfield Superfund Site, EM/WS,Rockaway Borough, East Main/Wall Street, Morris County, NJ

DATE: 15 Aug 2012

CONTRACTOR: CAPE Environmental Management Inc.

CONTRACT NUMBER: W912DQ-05-D-0001 0005

ACTIVITY No.	TRANS-MITTAL No.	ITEM No.	SPEC PARAGRAPH No.	DESCRIPTION OF SUBMITTAL	TYPE OF SUBMITTAL	CLASSI-FICATION FIO GA, DA or CR	CONTRACTOR REVIEWER	CONTRACTOR SCHEDULE DATES SUBMIT NEEDED BY	APPROVAL NEEDED BY	MATERIAL NEEDED BY	CONTRACTOR ACTION CODE	CORPS RECEIVED DATE	GOVERNMENT ACTION CODE	CORPS RETURNED DATE
	54	53	01202 1.3.1	Progress Meeting Minutes 041	PROGRESS RPTS	GA	mdl				A	19 Nov 10	B	22 Nov 10
	55	54	01202 1.3.1	Progress Meeting Minutes 042	PRODUCT DATA	GA	mdl				A	24 Nov 10	A	24 Nov 10
	56	55	01202 1.3.1	Progress Meeting Minutes 043	PRODUCT DATA	GA	mdl				A	30 Nov 10	A	30 Nov 10
	57	56	01202 1.3.1	Progress Meeting Minutes 044	PRODUCT DATA	GA	mdl				A	07 Dec 10	A	09 Dec 10
	58	57	01202 1.3.1	Progress Meeting Minutes 045	PRODUCT DATA	GA	mdl				A	17 Dec 10	A	17 Dec 10
	59	58	01202 1.3.1	Progress Meeting Minutes 046	PRODUCT DATA	GA	mdl				A	24 Dec 10	A	29 Dec 10
	60	59	01202 1.3.1	Progress Meeting Minutes 047	PRODUCT DATA	GA	mdl				A	07 Jan 11	A	07 Jan 11
	61	60	01202 1.3.1	Bypass Flowrate Mtg w/ J. Rossi	PRODUCT DATA	GA	mdl				A	07 Jan 11	F	10 Jan 11
	62	61	01202 1.3.1	Progress Meeting Minutes 048	PRODUCT DATA	GA	mdl				A	18 Jan 11	A	14 Jan 11
	63	62	01202 1.3.1	Progress Meeting Minutes 049	PRODUCT DATA	GA	mdl				A	18 Jan 11	A	19 Jan 11
	64	63	01202 1.3.1	Progress Meeting Minutes 050	PRODUCT DATA	GA	mdl				A	26 Jan 11	A	26 Jan 11
	65	64	01202 1.3.1	Progress Meeting Minutes 051	PRODUCT DATA	GA	mdl				A	03 Feb 11	A	04 Feb 11
	66	65	01202 1.3.1	Progress Meeting Minutes 052	PRODUCT DATA	GA	mdl				A	14 Feb 11	A	14 Feb 11
	67	66	01202 1.2.3	Progress Meeting Minutes 053	PRODUCT DATA	GA	mdl				A	16 Feb 11	A	22 Feb 11
	68	67	01202 1.2.3	Progress Meeting Minutes 054	PRODUCT DATA	GA	mdl				A	03 Mar 11	A	08 Mar 11
	69	68	01202 1.2.3	Progress Meeting Minutes 055	PRODUCT DATA	GA	mdl				A	11 Mar 11	A	18 Mar 11
	70	69	01202 1.2.3	Progress Meeting Minutes 056	PRODUCT DATA	GA	mdl				A	16 Mar 11	A	17 Mar 11
	71	70	01202 1.2.3	Progress Meeting Minutes 057	PRODUCT DATA	GA	mdl				A	26 Mar 11	A	28 Mar 11
	72	71	01202 1.2.3	Progress Meeting Minutes 058	PRODUCT DATA	GA	mdl				A	31 Mar 11	A	01 Apr 11
	73	72	01202 1.2.3	Progress Meeting Minutes 059	PRODUCT DATA	GA	mdl				A	08 Apr 11	A	11 Apr 11
	74	73	01202 1.2.3	Progress Meeting Minutes 060	PRODUCT DATA	GA	mdl				A	18 Apr 11	A	18 Apr 11
	75	74	01202 1.2.3	Progress Meeting Minutes 061	PRODUCT DATA	GA	mdl				A	25 Apr 11	A	25 Apr 11
	76	75	01202 1.2.3	Progress Meeting Minutes 062	PRODUCT DATA	GA	mdl				A	28 Apr 11	A	29 Apr 11
	77	76	01202 1.2.3	Progress Meeting Minutes 063	PRODUCT DATA	GA	mdl				A	06 May 11	A	05 May 11
	78	77	01202 1.2.3	Progress Meeting Minutes 064	PRODUCT DATA	GA	mdl				A	12 May 11	A	12 May 11
	79	78	01202 1.2.1	Progress Meeting Minutes 065	PRODUCT DATA	GA	mdl				A	19 May 11	A	19 May 11
	80	79	01202 1.2.1	Progress Meeting Minutes 066	PRODUCT DATA	GA	mdl				A	26 May 11	A	27 May 11
	81	80	01202 1.2.1	Progress Meeting Minutes 067	PRODUCT DATA	GA	mdl				A	02 Jun 11	A	02 Jun 11
	82	81	01202 1.2.1	Progress Meeting Minutes 068	PRODUCT DATA	GA	mdl				A	10 Jun 11	A	13 Jun 11
	83	82	01202 1.2.1	Progress Meeting Minutes 069	PRODUCT DATA	GA	mdl				A	17 Jun 11	A	17 Jun 11
	84	83	01202 1.2.1	Progress Meeting Minutes 070	PRODUCT DATA	FIO	mdl				A	24 Jun 11	A	27 Jun 11
	85	84	01202 1.2.1	Progress Meeting Minutes 071	PRODUCT DATA	FIO	mdl				A	30 Jun 11	A	30 Jun 11
	86	85	01202 1.2.1	Progress Meeting Minutes 072	PRODUCT DATA	GA	mdl				A	14 Jul 11	A	14 Jul 11
	87	86	01202 1.2.1	Progress Meeting Minutes 073	PRODUCT DATA	GA	mdl				A	25 Jul 11	A	25 Jul 11
	88	87	01202 1.2.1	Progress Meeting Minutes 074	PRODUCT DATA	GA	mdl				A	28 Jul 11	A	29 Jul 11

RANGE : ALL

SORT : SECTION & ITEM

SUBMITTAL REGISTER (ER 415-1-10)

TITLE AND LOCATION: Rockaway Wellfield Superfund Site, EM/WS,Rockaway Borough, East Main/Wall Street, Morris County, NJ

DATE: 15 Aug 2012

CONTRACTOR: CAPE Environmental Management Inc.

CONTRACT NUMBER: W912DQ-05-D-0001 0005

ACTIVITY No.	TRANS-MITTAL No.	ITEM No.	SPEC PARAGRAPH No.	DESCRIPTION OF SUBMITTAL	TYPE OF SUBMITTAL	CLASSI-FICATION FIO GA, DA or CR	CONTRACTOR REVIEWER	CONTRACTOR SCHEDULE DATES SUBMIT NEEDED BY	APPROVAL NEEDED BY	MATERIAL NEEDED BY	CONTRACTOR ACTION CODE	CORPS RECEIVED DATE	GOVERNMENT ACTION CODE	CORPS RETURNED DATE
	89	88	01202 1.2.1	Progress Meeting Minutes 075	PRODUCT DATA	GA	mdl				A	04 Aug 11	A	04 Aug 11
	90	89	01202 1.2.1	Progress Meeting Minutes 076	PRODUCT DATA	GA	mdl				A	15 Aug 11	A	15 Aug 11
	91	90	01202 1.2.1	Progress Meeting Minutes 077	PRODUCT DATA	GA	mdl				A	18 Aug 11	A	19 Aug 11
	92	91	01202 1.2.1	Progress Meeting Minutes 078	PRODUCT DATA	GA	mdl				A	25 Aug 11	A	29 Aug 11
	93.1	92	01202 1.2.1	GW-1 Reinstallation Meeting Minutes	PRODUCT DATA	GA	mdl				A	25 Oct 11	F	03 Nov 11
	94	93	01202 1.2.1	Progress Meeting Minutes 079	PRODUCT DATA	GA					A	19 Sep 11	A	19 Sep 11
	95	94	01202 1.2.1	Progress Meeting Minutes 080	PRODUCT DATA	GA					A	21 Sep 11	A	22 Sep 11
	96	95	01202 1.2.1	GW-1 Completion Meeting Minutes	PRODUCT DATA	GA					A	03 Oct 11	A	03 Oct 11
	97	96	01202 1.3.1	Progress Meeting Minutes 081	PRODUCT DATA	GA					A	03 Oct 11	F	03 Oct 11
	98	97	01202 1.3.1	Rockaway Meeting Minutes 082	PRODUCT DATA	GA					A	10 Oct 11	A	11 Oct 11
	99	98	01202	CDM Memo (GW-1 Bacteria)	PRODUCT DATA	FIO					A	10 Oct 11	F	11 Oct 11
	100	99	01202 1.3.1	Well Vault Pitless Adapter Minutes	PRODUCT DATA	GA					A	13 Oct 11	F	17 Oct 11
	101	100	01202 1.3.1	Progress Meeting Minutes 083	PRODUCT DATA	GA					A	14 Oct 11	A	17 Oct 11
	102	101	01202 1.3.1	Progress Meeting Minutes 084	PRODUCT DATA	GA					A	24 Oct 11	A	24 Oct 11
	103	102	01202 1.3.1	Progress Meeting Minutes 085	PRODUCT DATA	GA					A	02 Nov 11	A	03 Nov 11
	104	103	01202 1.3.1	Progress Meeting Minutes 086	PRODUCT DATA	GA					A	03 Nov 11	A	04 Nov 11
	105	104	01202 1.3.1	Progress Meeting Minutes 087	PRODUCT DATA	GA					A	09 Nov 11	A	15 Nov 11
	106	105	01202 1.3.1	Progress Meeting Minutes 089	PRODUCT DATA	GA					A	17 Nov 11	A	21 Nov 11
	107	106	01202 1.3.1	Progress Meeting 089	PRODUCT DATA	GA					A	09 Jan 12	A	08 Feb 12
SECTION - 01203			**Job Site Administration**											
0001	1	1	01203	B&B Drilling SF-1413	PRECON SUBMTL	GA		22 Nov 10	22 Nov 10	22 Nov 10	A	20 Aug 07	F	02 May 07
0001	100.5	2	01203	B&B Drilling - Certificate of Insurance	PRECON SUBMTL	FIO	mdl	22 Nov 10	22 Nov 10	22 Nov 10	A	08 Mar 12	F	24 May 12
0001	49.1	2.1	01203	B&B Drilling COI - Expires 050808	PRECON SUBMTL	FIO	SysAdmin	22 Nov 10	22 Nov 10	22 Nov 10	A	02 Nov 11	F	03 Nov 11
0001	2	3	01203	Delegation of Authority - Superintendent	QUALIFICATIONS	GA	mdl	22 Nov 10	22 Nov 10	22 Nov 10	A	20 Aug 07	G	02 Feb 11
0001	2	4	01203	Delegation of Authority - PJM	QUALIFICATIONS	GA	mdl	22 Nov 10	22 Nov 10	22 Nov 10	A	20 Aug 07	G	02 Feb 11
0001	39.1	5	01203 n/a	CAPE, COI -Expires 080501	CERTIFICATES	FIO	mdl	22 Nov 10	22 Nov 10	22 Nov 10	A	02 Nov 11	F	03 Nov 11
0001	59.1	6	01203 1.2.3	CAPE Certificate of Insurance	PRECON SUBMTL	FIO	mdl	22 Nov 10	22 Nov 10	22 Nov 10	A	11 May 11	F	12 May 11
	6	7	01203 n/a	B&B Drilling COI Revision 2	CERTIFICATES	FIO	mdl				A	20 Aug 07	F	01 Jun 07
	7	8	01203	Ehrich Electric COI	CERTIFICATES	FIO	mdl				A	20 Aug 07	F	01 Jun 07
	88.2	9	01203	CAPE Certified Payroll PE051207	PRODUCT DATA	GA	mdl				A	08 Nov 11	F	22 Nov 11
	88.2	10	01203	CAPE Certified Payroll PE051907	PRODUCT DATA	GA	mdl				A	08 Nov 11	F	22 Nov 11
	9	11	01203	CDM COI	CERTIFICATES	FIO	mdl				A	20 Aug 07	F	20 Jun 07
	9.1	11.1	01203 1.2.3	CDM COI	CERTIFICATES	FIO	mdl				A	25 Jan 11	F	31 Jan 11
	10	12	01203	CAPE Certified Payroll 3	PRODUCT DATA	GA	mdl				A	20 Aug 07	A	20 Jun 07
	10	13	01203	CAPE Certified Payroll 4	PRODUCT DATA	GA	mdl				A	20 Aug 07	A	20 Jun 07

RANGE : ALL

SORT : SECTION & ITEM

SUBMITTAL REGISTER (ER 415-1-10)

TITLE AND LOCATION Rockaway Wellfield Superfund Site, EM/WS,Rockaway Borough, East Main/Wall Street, Morris County, NJ

DATE 15 Aug 2012

CONTRACTOR CAPE Environmental Management Inc.

CONTRACT NUMBER W912DQ-05-D-0001 0005

ACTIVITY No.	TRANS-MITTAL No.	ITEM No.	SPEC PARAGRAPH No.	DESCRIPTION OF SUBMITTAL	TYPE OF SUBMITTAL	CLASSI-FICATION FIO GA, DA or CR	CONTRACTOR REVIEWER	CONTRACTOR SCHEDULE DATES SUBMIT NEEDED BY	APPROVAL NEEDED BY	MATERIAL NEEDED BY	CONTRACTOR ACTION CODE	CORPS RECEIVED DATE	GOVERNMENT ACTION CODE	CORPS RETURNED DATE
	11	14	01203	B&B Certifired Payroll 1	PRODUCT DATA	GA	mdl				A	20 Aug 07	A	20 Jun 07
	11	15	01203	B&B Certified Payroll 2	PRODUCT DATA	GA	mdl				A	20 Aug 07	A	20 Jun 07
	12	16	01203	USACE Computer Authorization	CERTIFICATES	FIO	mdl				A	20 Aug 07	F	09 Jul 07
	13	17	01203	CAPE Certified Payroll 6	PRODUCT DATA	GA	mdl				A	17 Aug 07	A	21 Aug 07
	14	18	01203	CAPE Certified Payroll 5	PRODUCT DATA	GA	mdl				A	20 Aug 07	A	20 Jul 07
	15	19	01203	Ehrich Electric Certified Payroll 1	PRODUCT DATA	GA	mdl				A	20 Aug 07	A	20 Jul 07
	16	25	01203	CAPE Certified Payroll 7	PRODUCT DATA	GA	mdl				A	20 Aug 07	A	20 Jul 07
	17	26	01203	CAPE Certified Payroll 8	PRODUCT DATA	GA	mdl				A	20 Aug 07	A	20 Jul 07
	18	27	01203	M&E Railway Permit	PRODUCT DATA	FIO	mdl				A	13 Aug 07	B	13 Aug 07
	19	28	01203	CAPE Certified Payroll 9	PRODUCT DATA	GA	mdl				A	20 Aug 07	A	20 Jul 07
	20	29	01203	CAPE Certified Payroll 10	PRODUCT DATA	GA	mdl				A	20 Aug 07	A	02 Aug 07
	20	30	01203	CAPE Certified Payroll 11	PRODUCT DATA	GA	mdl				A	20 Aug 07	A	02 Aug 07
	21	31	01203	CAPE Certified Payroll 12	PRODUCT DATA	GA	mdl				A	20 Aug 07	A	02 Aug 07
A0940	22	32	01203	WTDI COI	CERTIFICATES	FIO	mdl				A	16 Aug 07	F	21 Aug 07
A0970	23	33	01203	GWTTI COI	CERTIFICATES	FIO	mdl				A	18 Sep 07	F	19 Sep 07
	24	34	01203	CAPE Certified Payroll 13	PRODUCT DATA	GA	mdl				A	23 Aug 07	F	23 Aug 07
	24	35	01203	CAPE Certified Payroll 14	PRODUCT DATA	GA	mdl				A	23 Aug 07	F	23 Aug 07
	35	36	01203	CAPE Certified Payroll 15	PRODUCT DATA	GA	mdl				A	12 Oct 07	E	23 Oct 07
	35	37	01203	CAPE Certified Payroll 16	PRODUCT DATA	GA	mdl				A	12 Oct 07	E	23 Oct 07
	35	38	01203	B&B Drilling CP 3	PRODUCT DATA	GA	mdl				A	12 Oct 07	E	23 Oct 07
	35	39	01203	B&B Drilling CP 4	PRODUCT DATA	GA	mdl				A	12 Oct 07	E	23 Oct 07
	35	40	01203	B&B Drilling CP 5	PRODUCT DATA	GA	mdl				A	12 Oct 07	E	23 Oct 07
	35	41	01203	B&B Drilling CP 6	PRODUCT DATA	GA	mdl				A	12 Oct 07	E	23 Oct 07
	35	42	01203	B&B Drilling CP 7	PRODUCT DATA	GA	mdl				A	12 Oct 07	E	23 Oct 07
	35	43	01203	CAPE Certified Payroll 17	PRODUCT DATA	GA	mdl				A	12 Oct 07	E	23 Oct 07
	35	44	01203	B&B Drilling CP 8	PRODUCT DATA	GA	mdl				A	12 Oct 07	E	23 Oct 07
	30	45	01203	CAPE Certified Payroll 18	PRODUCT DATA	GA	mdl				A	21 Sep 07	F	27 Sep 07
	31	46	01203	B&B Drilling CP 9	PRODUCT DATA	GA	mdl				A	27 Sep 07	F	03 Oct 07
	32	47	01203	CAPE Certified Payroll 19	PRODUCT DATA	GA	mdl				A	03 Oct 07	F	03 Oct 07
	33	48	01203	B&B Drilling CP 10	PRODUCT DATA	GA	mdl				A	03 Oct 07	F	03 Oct 07
	34	49	01203	CAPE Certified Payroll 20	PRODUCT DATA	FIO	mdl				A	03 Oct 07	F	12 Oct 07
	36	50	01203	CAPE's Certified Payroll 21	PRODUCT DATA	GA	mdl				A	16 Oct 07	F	23 Oct 07
	37	51	01203	B&B Drilling CP 11	PRODUCT DATA	GA	mdl				A	16 Oct 07	F	23 Oct 07
	38	52	01203	CAPE Certified Payroll 22	CERTIFICATES	FIO	mdl				A	29 Oct 07	F	31 Oct 07
	39	53	01203	B&B Drilling CP 12	PRODUCT DATA	GA	mdl				A	29 Oct 07	F	31 Oct 07

RANGE : ALL

SORT : SECTION & ITEM

SUBMITTAL REGISTER (ER 415-1-10)

TITLE AND LOCATION Rockaway Wellfield Superfund Site, EM/WS,Rockaway Borough, East Main/Wall Street, Morris County, NJ

DATE 15 Aug 2012

CONTRACTOR CAPE Environmental Management Inc.

CONTRACT NUMBER W912DQ-05-D-0001 0005

ACTIVITY No.	TRANS-MITTAL No.	ITEM No.	SPEC PARAGRAPH No.	DESCRIPTION OF SUBMITTAL	TYPE OF SUBMITTAL	CLASSI-FICATION FIO GA, DA or CR	CONTRACTOR REVIEWER	CONTRACTOR SCHEDULE DATES SUBMIT NEEDED BY	APPROVAL NEEDED BY	MATERIAL NEEDED BY	CONTRACTOR ACTION CODE	CORPS RECEIVED DATE	GOVERNMENT ACTION CODE	CORPS RETURNED DATE
	40	54	01203	CAPE Certified Payroll 23	PRODUCT DATA	GA	mdl				A	15 Nov 07	F	15 Nov 07
	41	55	01203	CAPE Certified Payroll 24	PRODUCT DATA	GA	mdl				A	15 Nov 07	F	15 Nov 07
	42	56	01203	CAPE Certified Payroll 25	PRODUCT DATA	GA	mdl				A	29 Nov 07	F	29 Nov 07
	43	57	01203	B&B Drilling CP #13	PRODUCT DATA	GA					A	29 Nov 07	F	29 Nov 07
	44	58	01203	B&B CP Confirmed Completeness	STATEMENTS	GA	mdl				A	29 Nov 07	F	29 Nov 07
	45	59	01203	Cape Certified Payroll #26	STATEMENT	GA	mdl				A	29 Nov 07	G	02 Feb 11
	46	60	01203	Non-Haz Signature Signing Authorization	STATEMENT	GA	mdl				A	29 Nov 07	F	29 Nov 07
	47	61	01203	Third Party Signature Authorization	STATEMENT	FIO	mdl				A	29 Nov 07	F	29 Nov 07
A0380	48.1	62	01203	Road Opening Permit - Rockaway Borough		FIO	mdl				A	08 Nov 11	F	15 Nov 11
	49	63	01203	CAPE Certified Payroll 27	CERTIFICATES	GA	mdl				A	12 Dec 07	F	12 Dec 07
	50	64	01203	CAPE Certified Payroll 28	CERTIFICATES	GA	mdl				A	12 Dec 07	F	12 Dec 07
	51	65	01203	CAPE Certified Payroll 29	CERTIFICATES	GA	mdl				A	12 Dec 07	F	12 Dec 07
	52	66	01203	CAPE Certified Payroll 30	PRODUCT DATA	GA	mdl				A	12 Dec 07	F	07 Jan 08
0003	53	67	01203	CAPE Certified Payroll 31 (w/e 12/8/07)	CERTIFICATES	GA	mdl				A	07 Jan 08	F	07 Jan 08
	54	68	01203	CAPE Certified Payroll 32 (w/e 12/15/07)	CERTIFICATES	GA	mdl				A	18 Jan 08	F	04 Feb 08
	55	69	01203	CAPE Certified Payroll 33 (w/e 12/22/07)	CERTIFICATES	GA	mdl				A	18 Jan 08	F	04 Feb 08
	56	70	01203	CAPE Certified Payroll 34 (w/e 12/29/07)	CERTIFICATES	GA	mdl				A	18 Jan 08	F	04 Feb 08
	57	71	01203	CAPE Certified Payroll 35 (w/e 1/5/08)	CERTIFICATES	FIO	mdl				A	18 Jan 08	F	04 Feb 08
	58	72	01203	Cape CP #36; w/e 1/12/2008	CERTIFICATES	GA	mdl				A	27 Feb 08	F	29 Feb 08
	59	73	01203	CAPE Certified Payroll 37 (w/e 1/19/08)	CERTIFICATES	GA	mdl				A	04 Feb 08	F	04 Feb 08
	60	74	01203	CDM COI expires 1/1/09	CERTIFICATES	FIO	mdl				A	21 Feb 08	F	29 Feb 08
	61	75	01203	CAPE Certified Payroll 38 (w/e 1/26/08)	CERTIFICATES	GA	mdl				A	21 Feb 08	F	21 Feb 08
	62	76	01203	CAPE Certified Payroll 39 (w/e 2/2/08)	CERTIFICATES	GA	mdl				A	21 Feb 08	F	21 Feb 08
	63	77	01203	CAPE Certified Payroll 40 (WE 2/9/08)	CERTIFICATES	GA	mdl				A	19 Mar 08	F	19 May 08
	64	78	01203	CAPE Certified Payroll 41 (WE 2/16/08)	CERTIFICATES	FIO	mdl				A	19 Mar 08	F	19 May 08
	65	79	01203	CAPE Certified Payroll 42 (WE 2/23/08)	CERTIFICATES	FIO	mdl				A	19 Mar 08	F	19 May 08
	66	80	01203	ANS Consultants COI expires 07FEB09	CERTIFICATES	FIO	mdl				A	19 Mar 08	F	19 May 08
	67	81	01203	CAPE Certified Payroll 43 (WE 3/01/08)	CERTIFICATES	FIO	mdl				A	19 Mar 08	F	19 May 08
	68	82	01203	CAPE Certified Payroll 044 (WE 3/8/08)	CERTIFICATES	FIO	mdl				A	29 Apr 08	F	19 May 08
	69	83	01203	CAPE Certified Payroll 045 (WE 3/15/08)	CERTIFICATES	FIO	mdl				A	29 Apr 08	F	19 May 08
	70	84	01203	CAPE Certified Payroll 046 (WE 3/22/08)	CERTIFICATES	FIO	mdl				A	29 Apr 08	F	19 May 08
	71	85	01203	CAPE Certified Payroll 047 (WE 3/29/08)	CERTIFICATES	FIO	mdl				A	29 Apr 08	F	19 May 08
	72	86	01203	CAPE Certified Payroll 048 (WE 4/5/08)	CERTIFICATES	FIO	mdl				A	29 Apr 08	F	19 May 08
	73	90	01203	CAPE Certified Payroll 052 (WE 5/3/08)	CERTIFICATES	FIO	mdl				A	13 Jun 08	F	01 Jul 08
	74	91	01203	CFO Delegation of Authority Letter	PRODUCT DATA	FIO	mdl				A	16 Aug 08	G	02 Feb 11

RANGE : ALL

SORT : SECTION & ITEM

SUBMITTAL REGISTER (ER 415-1-10)

TITLE AND LOCATION Rockaway Wellfield Superfund Site, EM/WS,Rockaway Borough, East Main/Wall Street, Morris County, NJ

DATE 15 Aug 2012

CONTRACTOR CAPE Environmental Management Inc.

CONTRACT NUMBER W912DQ-05-D-0001 0005

ACTIVITY No.	TRANS-MITTAL No.	ITEM No.	SPEC PARAGRAPH No.	DESCRIPTION OF SUBMITTAL	TYPE OF SUBMITTAL	CLASSI-FICATION FIO GA, DA or CR	CONTRACTOR REVIEWER	CONTRACTOR SCHEDULE DATES SUBMIT NEEDED BY	APPROVAL NEEDED BY	MATERIAL NEEDED BY	CONTRACTOR ACTION CODE	CORPS RECEIVED DATE	GOVERNMENT ACTION CODE	CORPS RETURNED DATE
	75	92	01203	CAPE Certified Payroll 056 (WE 8/9/08)	CERTIFICATES	GA	mdl				A	05 Sep 08	F	16 Aug 10
	76	93	01203	CAPE Certified Payroll 057 (WE 8/22/08)	CERTIFICATES	GA	mdl				A	05 Sep 08	F	16 Aug 10
	77	94	01203	CAPE Certified Payroll 058 (WE 8/29/08)	CERTIFICATES	GA					A	06 Sep 08	F	16 Aug 10
	78	95	01203	CAPE Certificate of Insurance 05/01/2011		GA					A	30 Jun 10	F	16 Aug 10
	79	96	01203	CDM Certificate of Insurance 01/01/2011		DA/CR					A	26 Jul 10	F	26 Jul 10
	80	97	01203	B&B Certificate of Insurance 05/09/2011		GA					A	26 Jul 10	F	26 Jul 10
	81	98	01203	B&B Drilling CP #14		DA/CR					A	26 Jul 10	F	26 Jul 10
	82	99	01203 1.3	LAN Certificate of Insurance 05/01/2011	CERTIFICATES	FIO					A	27 Sep 10	F	28 Sep 10
	83	100	01203 1.3	Tectonic Cert of Insurance 09/18/2011	CERTIFICATES	FIO					A	30 Sep 10	F	15 Oct 10
	84	101	01203 1.1	ANS Consultants SF1413	PRECON SUBMTL	FIO					A	20 Oct 10	F	26 Oct 10
0001	85	102	01203 1.3	ANS Consultants COI 02/07/2011		FIO		22 Nov 10	22 Nov 10	22 Nov 10	A	20 Oct 10	F	26 Oct 10
	86	103	01203 1.3	TTI Environmental COI 04/26/2011	PRECON SUBMTL	FIO	SysAdmin				A	26 Oct 10	F	26 Oct 10
	87	104	01203 1.1	ANS Consultants Certified Payroll #1	RECORDS	GA					A	10 Nov 10	F	15 Nov 10
	88.1	105	01203	Superintendent DoA - Morrison 17NOV2010	PRECON SUBMTL	GA	mdl				A	18 Apr 11	B	20 Apr 11
	89	106	01203	AltSuperintendent DoA - Landle 17NOV2010	PRECON SUBMTL	GA	mdl				A	24 Nov 10	B	16 Dec 10
	90	107	01203	GWTTI Cert of Insurance	PRECON SUBMTL	FIO	mdl				A	24 Nov 10	F	02 Dec 10
	91	108	01203 1.1	AbateTech Cert of Insurance	PRECON SUBMTL	FIO	mdl				A	24 Nov 10	F	02 Dec 10
	92	109	01203	GWTTI SF-1413	PRECON SUBMTL	FIO	mdl				A	24 Nov 10	F	02 Dec 10
	92.1	109.1	01203 1.2.3	GWTTI SF-1413	PRODUCT DATA	FIO	mdl				A	01 Dec 10	F	06 Dec 10
	96	110	01203 1.2.3	AbateTech SF-1413	PRECON SUBMTL	FIO	mdl				A	08 Feb 11	F	09 Feb 11
	94	111	01203 1.1	Ehrich Electric Cert of Insurance	PRECON SUBMTL	FIO	mdl				A	24 Nov 10	F	06 Dec 10
	95	112	01203 1.1	Soil Safe Cert of Insurance	PRECON SUBMTL	FIO	mdl				A	24 Nov 10	F	06 Dec 10
	95.1	112.1	01203 1.2.3	Soil Safe COI	CERTIFICATES	FIO	mdl				A	27 Jan 11	F	31 Jan 11
	100.4	113	01203 1.2.1	Project Organizational Chart	PRODUCT DATA	GA	SysAdmin				A	08 Mar 12	B	24 May 12
	100.1	113.1	01203 1.2.1	Project Organizational Chart	PRODUCT DATA	GA	mdl				A	19 Jan 11	B	04 Feb 11
	101	114	01203 1.2.2	Project Manager Name and Experience	PRODUCT DATA	GA	mdl				A	03 Dec 10	B	16 Dec 10
	98	115	01203 1.2.3	M&E Tree Svc SF1413	PRODUCT DATA	FIO	mdl				A	06 Dec 10	F	06 Dec 10
	97	116	01203 1.2.3	A.C. Schultes COI	PRODUCT DATA	FIO	mdl				A	06 Dec 10	F	06 Dec 10
	99	117	01203 1.2.3	M&E Tree Svc COI	PRODUCT DATA	FIO	mdl				A	06 Dec 10	F	06 Dec 10
	102.1	118	01203 1.2.3	AbateTech CP#1	PRODUCT DATA	FIO	mdl				A	26 Jan 11	F	31 Jan 11
	103	119	01203 1.2.3	Maddox Materials SF-1413	PRODUCT DATA	FIO	mdl				A	07 Dec 10	F	09 Dec 10
	104	120	01203 1.2.3	Maddox Materials COI	PRODUCT DATA	FIO	mdl				A	07 Dec 10	F	09 Dec 10
	104.1	120.1	01203 1.2.3	Maddox Materials COI	CERTIFICATES	FIO	mdl				A	26 Jan 11	F	31 Jan 11
	105	121	01203 1.2.3	GWTTI CP#1	PRODUCT DATA	FIO	mdl				A	07 Dec 10	F	09 Dec 10
	106.1	122	01203 1.2.3	BL Myers COI	PRODUCT DATA	FIO	mdl				A	19 Jan 11	F	24 Jan 11

RANGE : ALL

SORT : SECTION & ITEM

SUBMITTAL REGISTER (ER 415-1-10)

TITLE AND LOCATION Rockaway Wellfield Superfund Site, EM/WS,Rockaway Borough, East Main/Wall Street, Morris County, NJ

DATE 15 Aug 2012

CONTRACTOR CAPE Environmental Management Inc.

CONTRACT NUMBER W912DQ-05-D-0001 0005

ACTIVITY No.	TRANS-MITTAL No.	ITEM No.	SPEC PARAGRAPH No.	DESCRIPTION OF SUBMITTAL	TYPE OF SUBMITTAL	CLASSI-FICATION FIO GA, DA or CR	CONTRACTOR REVIEWER	CONTRACTOR SCHEDULE DATES SUBMIT NEEDED BY	APPROVAL NEEDED BY	MATERIAL NEEDED BY	CONTRACTOR ACTION CODE	CORPS RECEIVED DATE	GOVERNMENT ACTION CODE	CORPS RETURNED DATE
	107	123	01203 1.2.3	Alimi Construction COI	CERTIFICATES	FIO	mdl				A	13 Dec 10	F	29 Dec 10
	108	124	01203 1.2.3	GWTTI CP#2 04DEC2010	CERTIFICATES	FIO	mdl				A	28 Dec 11	F	28 Jan 10
	109	125	01203 1.2.3	M&E Tree Svc CP#1	CERTIFICATES	FIO	mdl				A	08 Feb 11	F	09 Feb 11
	110	126	01203 1.2.3	Advanced Geological Svcs COI	CERTIFICATES	FIO	mdl				A	17 Dec 10	F	29 Dec 10
	111	127	01203 1.2.3	First Class Trucking CP#1	CERTIFICATES	FIO	mdl				A	08 Feb 11	F	09 Feb 11
	112	128	01203 1.2.3	Hawk Drilling COI	CERTIFICATES	FIO	mdl				A	17 Dec 10	F	29 Dec 10
	113	129	01203 1.2.3	First Class Trucking CP#2	CERTIFICATES	FIO	mdl				A	08 Feb 11	F	09 Feb 11
	114	130	01203 1.2.3	Alimi Builders SF-1413	CERTIFICATES	FIO	mdl				A	07 Jan 11	F	29 Dec 10
	115	131	01203 1.2.3	Hager-Richter Geoscience, Inc. COI	CERTIFICATES	FIO	mdl				A	22 Dec 10	F	29 Dec 10
	116	132	01203 1.2.3	Frontz Drilling CP#1	CERTIFICATES	FIO	mdl				A	07 Jan 11	F	11 Jan 11
	117.1	133	01203 1.2.3	Ehrich Elec CP 2010-12-11	CERTIFICATES	FIO	mdl				A	27 Jan 11	F	31 Jan 11
	118	134	01203 1.2.3	Frontz Drilling 2010-12-26	CERTIFICATES	FIO	mdl				A	07 Jan 11	F	11 Jan 11
	119.1	135	01203 1.2.3	Maddox Mat'ls CP 2010-12-19	CERTIFICATES	FIO	mdl				A	26 Jan 11	F	31 Jan 11
	120.1	136	01203 1.2.3	GWTTI CP 2010-12-11	CERTIFICATES	FIO	mdl				A	26 Jan 11	F	31 Jan 11
	121	137	01203 1.2.3	Superintendent DoA - McNeil 14JAN2011	PRODUCT DATA	GA	mdl				A	17 Jan 11	B	19 Jan 11
	122	138	01203 1.2.3	Alt Super DoA - Morrison 14JAN2011	PRODUCT DATA	GA	mdl				A	17 Jan 11	B	19 Jan 11
	123	139	01203 1.2.3	Ehrich Elec CP 18DEC2010	CERTIFICATES	FIO	mdl				A	19 Jan 11	F	31 Jan 11
	124	140	01203 1.2.3	Ehrich Elec CP 25DEC2010	PRODUCT DATA	FIO	mdl				A	19 Jan 11	F	31 Jan 11
	125	141	01203 1.2.3	GWTTI CP 2010-12-18	CERTIFICATES	FIO	mdl				A	26 Jan 11	F	31 Jan 11
	126	142	01203 1.2.3	GWTTI CP 2010-12-25	CERTIFICATES	FIO	mdl				A	26 Jan 11	F	31 Jan 11
	127	143	01203 1.2.3	AC Schultes SF-1413	CERTIFICATES	FIO	mdl				A	08 Feb 11	F	10 Feb 11
	128	144	01203 1.2.3	GWTTI CP 15JAN2011	CERTIFICATES	FIO	mdl				A	10 Feb 11	F	11 Feb 11
	129	145	01203 1.2.3	Maddox Materials CP 23JAN2011	CERTIFICATES	FIO	mdl				A	10 Feb 11	F	11 Feb 11
	130	146	01203 1.2.3	Maddox Materials CP 30JAN2011	CERTIFICATES	FIO	mdl				A	10 Feb 11	F	11 Feb 11
	131	147	01203 1.2.3	AC Schultes CP 16JAN2011	CERTIFICATES	FIO	mdl				A	10 Feb 11	F	11 Feb 11
	132	148	01203 1.2.3	Ehrich Electric Cert. Payroll 1/15/11	CERTIFICATES	FIO	mdl				A	15 Feb 11	F	15 Feb 11
	133	149	01203 1.2.3	Ehrich Electric Cert. Payroll 1/29/11	CERTIFICATES	FIO	mdl				A	15 Feb 11	F	15 Feb 11
	134	150	01203 1.2.3	Ehrich Electric Cert Payroll 2/5/11	CERTIFICATES	FIO	mdl				A	14 Feb 11	F	15 Feb 11
	135	151	01203 1.2.3	First Class Truck Cert Payroll 2/6/11	CERTIFICATES	FIO	mdl				A	14 Feb 11	F	15 Feb 11
	136	152	01203 1.2.3	Abbott O'Reilly SF1413	CERTIFICATES	FIO	mdl				A	17 Feb 10	F	21 Feb 11
	137	153	01203 1.2.3	Abbott O'Reilly COI	CERTIFICATES	FIO	mdl				A	08 Mar 11	F	12 Mar 11
	138	154	01203 1.2.3	CAPE Cert Payroll 1/22/11	CERTIFICATES	FIO	mdl				A	17 Feb 11	F	22 Feb 11
	139.1	155	01203 1.2.3	CAPE Cert Payroll 1/29/11	CERTIFICATES	FIO	mdl				A	08 Nov 11	F	22 Nov 11
	140	156	01203 1.2.3	Forte Plumbing - Cert of Insurance	CERTIFICATES	FIO	mdl				A	22 Feb 11	F	24 Feb 11
	141	157	01203 1.2.3	Rainbow Transport Cert of Insurance	CERTIFICATES	FIO	mdl				A	22 Feb 11	F	24 Feb 11

RANGE : ALL

SORT : SECTION & ITEM

SUBMITTAL REGISTER (ER 415-1-10)

TITLE AND LOCATION: Rockaway Wellfield Superfund Site, EM/WS,Rockaway Borough, East Main/Wall Street, Morris County, NJ

DATE: 15 Aug 2012

CONTRACTOR: CAPE Environmental Management Inc.

CONTRACT NUMBER: W912DQ-05-D-0001 0005

ACTIVITY No.	TRANS-MITTAL No.	ITEM No.	SPEC PARAGRAPH No.	DESCRIPTION OF SUBMITTAL	TYPE OF SUBMITTAL	CLASSI-FICATION FIO GA, DA or CR	CONTRACTOR REVIEWER	CONTRACTOR SCHEDULE DATES SUBMIT NEEDED BY	APPROVAL NEEDED BY	MATERIAL NEEDED BY	CONTRACTOR ACTION CODE	CORPS RECEIVED DATE	GOVERNMENT ACTION CODE	CORPS RETURNED DATE
	142	158	01203 1.2.3	Miller Drilling Cert of Insurance	CERTIFICATES	FIO	mdl				A	28 Feb 11	F	28 Feb 11
	143	159	01203 1.2.3	Intex Certificate of Insurance	CERTIFICATES	FIO	mdl				A	19 Mar 11	F	19 Mar 11
	144	160	01203 1.2.3	Intex SF-1413	CERTIFICATES	FIO	mdl				A	28 Feb 11	F	03 Mar 11
	145	161	01203 1.2.3	Morris Security SF1413	CERTIFICATES	FIO	mdl				A	28 Feb 11	F	03 Mar 11
	146	162	01203 1.2.3	First Class Truck Cert Payroll 2/26/11	CERTIFICATES	FIO	mdl				A	01 Mar 11	F	07 Mar 11
	147	163	01203 1.2.3	CAPE Cert Payroll 2/5/11	CERTIFICATES	FIO	mdl				A	07 Mar 11	F	08 Mar 11
	148	164	01203 1.2.3	CAPE Cert Payroll 2/12/11	CERTIFICATES	FIO	mdl				A	01 Mar 11	F	14 Mar 11
	149	165	01203 1.2.3	CAPE Cert Payroll 2/19/11	CERTIFICATES	FIO	mdl				A	01 Mar 11	F	14 Mar 11
	150	166	01203 1.2.3	CAPE Cert Payroll 2/26/11	CERTIFICATES	FIO	mdl				A	01 Mar 11	F	14 Mar 11
	151	167	01203 1.2.3	Ehrich Electric Cert Payroll 2/12/11	CERTIFICATES	FIO	mdl				A	01 Mar 11	F	14 Mar 11
	152	168	01203 1.2.3	Ehrich Electric Cert Payroll 2/26/11	CERTIFICATES	FIO	mdl				A	01 Mar 11	F	14 Mar 11
	153	169	01203 1.2.3	Miller Drilling SF-1413	CERTIFICATES	FIO	mdl				A	02 Mar 11	F	07 Mar 11
	154	170	01203 1.2.3	F Ramos Trucking Cert of Insurance	CERTIFICATES	FIO	mdl				A	02 Mar 11	F	07 Mar 11
	155	171	01203 1.2.3	Reilly Sweeping Cert of Insurance	CERTIFICATES	FIO	mdl				A	02 Mar 11	F	07 Mar 11
	156	172	01203 1.2.3	Bigler Associates Cert of Insurance	CERTIFICATES	FIO	mdl				A	06 Mar 11	F	08 Mar 11
	157	173	01203 1.2.3	Reilly Sweeping SF1413	CERTIFICATES	FIO	mdl				A	08 Mar 11	F	12 Mar 11
	158	174	01203 1.2.3	First Class Truck Cert Payroll 3/09/11	CERTIFICATES	FIO	mdl				A	19 Mar 11	F	19 Mar 11
	159	175	01203 1.2.3	CAPE Cert Payroll 3/05/11	CERTIFICATES	FIO	mdl				A	18 Mar 11	F	
	160	176	01203 1.2.3	Alimi Certified Payroll 3/6/11	CERTIFICATES	FIO	mdl				A	18 Mar 11	F	
	161	177	01203 1.2.3	Morris Secuirty Certificate of Insurance	CERTIFICATES	FIO	mdl				A	18 Mar 11	F	
	162	178	01203 1.2.3	Atlantis Energy Cert of Insurance	CERTIFICATES	FIO	mdl				A	23 Mar 11	F	25 Mar 11
	163	179	01203 1.2.3	Semcor SF1413	CERTIFICATES	FIO	mdl				A	23 Mar 11	A	28 Mar 11
	164	180	01203 1.2.3	CAPE Cert Payroll 3/12/11	CERTIFICATES	FIO	mdl				A	28 Mar 11	F	01 Apr 11
	165	181	01203 1.2.3	York Fencing Certificate of Insurance	CERTIFICATES	FIO	mdl				A	28 Mar 11	F	01 Apr 11
	166	182	01203 1.2.3	York Fencing SF1413	CERTIFICATES	FIO	mdl				A	08 Apr 11	F	08 Apr 11
	167	183	01203 1.2.3	Miller Drilling Cert Payroll 3-12-11	CERTIFICATES	FIO	mdl				A	29 Mar 11	F	01 Apr 11
	168	184	01203 1.2.3	Miller Drilling Cert Payroll 3-19-11	CERTIFICATES	FIO	mdl				A	29 Mar 11	F	01 Apr 11
	169	185	01203 1.2.3	CAPE Cert Payroll 3/19/11	CERTIFICATES	FIO	mdl				A	30 Mar 11	F	01 Apr 11
	170	186	01203 1.2.3	Pave-Rite SF1413	CERTIFICATES	FIO	mdl				A	31 Mar 11	F	18 Apr 11
	171	187	01203 1.2.3	Forte Plumbing SF1413	CERTIFICATES	FIO	mdl				A	31 Mar 11	F	08 Apr 11
	172.1	188	01203 1.2.3	Alimi Certified Payroll 3/13/11	CERTIFICATES	FIO	mdl				A	29 Apr 11	F	29 Apr 11
	173.1	189	01203 1.2.3	Alimi Certified Payroll 3/20/11	CERTIFICATES	FIO	mdl				A	29 Apr 11	F	29 Apr 11
	174	190	01203 1.2.3	First Class Truck Cert Payroll 3-22-11	CERTIFICATES	FIO	mdl				A	04 Apr 11	F	08 Apr 11
	175	191	01203 1.2.3	CAPE Cert Payroll 3/26/11	CERTIFICATES	FIO	mdl				A	07 Apr 11	F	08 Apr 11
	176	192	01203 1.2.3	York Fencing Cert Payroll 3-28-11	CERTIFICATES	FIO	mdl				A	07 Apr 11	F	08 Apr 11

RANGE : ALL

SORT : SECTION & ITEM

SUBMITTAL REGISTER (ER 415-1-10)

TITLE AND LOCATION Rockaway Wellfield Superfund Site, EM/WS,Rockaway Borough, East Main/Wall Street, Morris County, NJ

DATE 15 Aug 2012

CONTRACTOR CAPE Environmental Management Inc.

CONTRACT NUMBER W912DQ-05-D-0001 0005

ACTIVITY No.	TRANS-MITTAL No.	ITEM No.	SPEC PARAGRAPH No.	DESCRIPTION OF SUBMITTAL	TYPE OF SUBMITTAL	CLASSI-FICATION FIO GA, DA or CR	CONTRACTOR REVIEWER	CONTRACTOR SCHEDULE DATES SUBMIT NEEDED BY	APPROVAL NEEDED BY	MATERIAL NEEDED BY	CONTRACTOR ACTION CODE	CORPS RECEIVED DATE	GOVERNMENT ACTION CODE	CORPS RETURNED DATE
	177	193	01203 1.2.3	Semcor Cert of Insurance	CERTIFICATES	FIO	mdl				A	07 Apr 11	F	18 Apr 11
	178	194	01203 1.2.3	Alimi Certified Payroll 3/27/11	CERTIFICATES	FIO	mdl				A	13 Apr 11	F	18 Apr 11
	179	195	01203 1.2.3	First Class Truck Cert Payroll 4-01-11	CERTIFICATES	FIO	mdl				A	13 Apr 11	F	18 Apr 11
	180	196	01203 1.2.3	Alimi Certified Payroll 4-3-11	CERTIFICATES	FIO	mdl				A	18 Apr 11	F	20 Apr 11
	181	197	01203 1.2.3	Ehrich Electric Cert Payroll 3/5/11	CERTIFICATES	FIO	mdl				A	18 Apr 11	F	20 Apr 11
	182	198	01203 1.2.3	Ehrich Electric Cert Payroll 3-26-11	CERTIFICATES	FIO	mdl				A	18 Apr 11	F	20 Apr 11
	183	199	01203 1.2.3	Ehrich Electric Cert Payroll 4-2-11	CERTIFICATES	FIO	mdl				A	18 Apr 11	F	20 Apr 11
	184.1	200	01203 1.2.3	CAPE Cert Payroll 4-2-11	CERTIFICATES	FIO	mdl				A	29 Apr 11	F	29 Apr 11
	185.1	201	01203 1.2.3	Miller Drilling Cert Payroll 3-26-11	CERTIFICATES	FIO	mdl				A	29 Apr 11	F	06 May 11
	186.1	202	01203 1.2.3	Miller Drilling Cert Payroll 4/2/11	CERTIFICATES	FIO	mdl				A	29 Apr 11	F	06 May 11
	187.1	203	01203 1.2.3	Miller Drilling Cert Payroll 4/9/11	CERTIFICATES	FIO	mdl				A	29 Apr 11	F	06 May 11
	188	204	01203 1.2.3	Reilly Sweeping Cert Payroll 4-10-11	CERTIFICATES	FIO	mdl				A	20 Apr 11	F	21 Apr 11
	189	205	01203 1.2.3	CAPE Cert Payroll 4-9-11	CERTIFICATES	FIO	mdl				A	29 Apr 11	F	29 Apr 11
	190	206	01203 1.2.3	Alimi Certified Payroll 4-10-11	CERTIFICATES	FIO	mdl				A	29 Apr 11	F	29 Apr 11
	191	207	01203 1.2.3	Alimi Certified Payroll 4-17-11	CERTIFICATES	FIO	mdl				A	05 May 11	F	06 May 11
	192	208	01203 1.2.3	Alimi Certified Payroll 4-24-11	CERTIFICATES	FIO	mdl				A	05 May 11	F	06 May 11
	193	209	01203 1.2.3	Ehrich Electric Cert Payroll 4-9-11	CERTIFICATES	FIO	mdl				A	05 May 11	F	06 May 11
	194	210	01203 1.2.3	Reilly Sweeping Cert Payroll 4-24-11	CERTIFICATES	FIO	mdl				A	05 May 11	F	06 May 11
	195	211	01203 1.2.3	F. Ramos Trucking Cert Payroll 4-16-11	CERTIFICATES	FIO	mdl				A	05 May 11	F	06 May 11
	196	212	01203 1.2.3	F. Ramos Trucking Cert Payroll 4-23-11	CERTIFICATES	FIO	mdl				A	05 May 11	F	06 May 11
	197	213	01203 1.2.3	CAPE Cert Payroll 4-16-11	CERTIFICATES	FIO	mdl				A	06 May 11	F	12 May 11
	198	214	01203 1.3.1	CAPE Cert Payroll 4-23-11	CERTIFICATES	FIO	mdl				A	11 May 12	F	12 May 11
	199	215	01203 1.2.3	Alimi Certified Payroll 5-01-11	CERTIFICATES	FIO	mdl				A	19 May 11	F	23 May 11
	200	216	01203 1.2.3	CAPE Cert Payroll 4-30-11	CERTIFICATES	FIO	mdl				A	19 May 11	F	23 May 11
	201	217	01203 1.2.3	CAPE Cert Payroll 5-7-11	CERTIFICATES	FIO	mdl				A	19 May 11	F	23 May 11
	202	218	01203 1.2.3	SEMCOR Cert Payroll 4-22-11	CERTIFICATES	FIO	mdl				A	19 May 11	F	23 May 11
	203	219	01203 1.2.3	SEMCOR Cert Payroll 4-29-11	CERTIFICATES	FIO	mdl				A	19 May 11	F	23 May 11
	204.1	220	01203 1.2.3	Boccella Precast Cert of Insurance	CERTIFICATES	FIO	mdl				A	22 Jul 11	F	29 Jul 11
	205	221	01203 1.2.3	Alimi Certified Payroll 5-08-11	CERTIFICATES	FIO	mdl				A	26 May 11	F	26 May 11
	206	222	01203 1.2.3	Alimi Certified Payroll 5-15-11	CERTIFICATES	FIO	mdl				A	26 May 11	F	26 May 11
	207	223	01203 1.2.3	F. Ramos Trucking Cert Payroll 4-30-11	CERTIFICATES	FIO	mdl				A	26 May 11	F	27 May 11
	208	224	01203 1.2.3	F. Ramos Trucking Cert Payroll 5-07-11	CERTIFICATES	FIO	mdl				A	26 May 11	F	27 May 11
	209	225	01203 1.2.3	F. Ramos Trucking Cert Payroll 5-14-11	CERTIFICATES	FIO	mdl				A	26 May 11	F	27 May 11
	210	226	01203 1.2.3	F. Ramos Trucking Cert Payroll 5-21-11	CERTIFICATES	FIO	mdl				A	26 May 11	F	27 May 11
	211	227	01203 1.2.3	Ehrich Electric Cert Payroll 5-14-11	CERTIFICATES	FIO	mdl				A	26 May 11	F	27 May 11

RANGE : ALL

SORT : SECTION & ITEM

SUBMITTAL REGISTER (ER 415-1-10)

TITLE AND LOCATION: Rockaway Wellfield Superfund Site, EM/WS,Rockaway Borough, East Main/Wall Street, Morris County, NJ

DATE: 15 Aug 2012

CONTRACTOR: CAPE Environmental Management Inc.

CONTRACT NUMBER: W912DQ-05-D-0001 0005

ACTIVITY No.	TRANS-MITTAL No.	ITEM No.	SPEC PARAGRAPH No.	DESCRIPTION OF SUBMITTAL	TYPE OF SUBMITTAL	CLASSI-FICATION FIO GA, DA or CR	CONTRACTOR REVIEWER	CONTRACTOR SCHEDULE DATES: SUBMIT NEEDED BY	APPROVAL NEEDED BY	MATERIAL NEEDED BY	CONTRACTOR ACTION: CODE	CORPS RECEIVED DATE	GOVERNMENT ACTION: CODE	CORPS RETURNED DATE
	212	228	01203 1.2.3	CAPE Cert Payroll 5-14-11	CERTIFICATES	FIO	mdl				A	26 May 11	F	27 May 11
	213	229	01203 1.2.3	CAPE Cert Payroll 5-21-11	CERTIFICATES	FIO	mdl				A	06 Jun 11	F	13 Jun 11
	214	230	01203 1.2.3	Ehrich Electric Cert Payroll 5-21-11	CERTIFICATES	FIO	mdl				A	06 Jun 11	F	13 Jun 11
	215	231	01203 1.2.3	F&C Aluminum Railing SF-1413	PRODUCT DATA	FIO	mdl				A	10 Jun 11	F	10 Jun 11
	216	232	01203 1.2.3	Alimi Certified Payroll 5-22-11	CERTIFICATES	FIO	mdl				A	10 Jun 11	F	13 Jun 11
	217	233	01203 1.2.3	Alimi Certified Payroll 5-29-11	CERTIFICATES	FIO	mdl				A	10 Jun 11	F	13 Jun 11
	218	234	01203 1.2.3	SEMCOR Cert Payroll 5-27-11	CERTIFICATES	FIO	mdl				A	10 Jun 11	F	13 Jun 11
	219	235	01203 1.2.3	CAPE Cert Payroll 5-28-11	CERTIFICATES	FIO	mdl				A	13 Jun 11	F	17 Jun 11
	220	236	01203 1.2.3	CAPE Cert Payroll 6-04-11	CERTIFICATES	FIO	mdl				A	17 Jun 11	F	17 Jun 11
	221	237	01203 1.2.3	First Class Truck Cert Payroll 5-15-11	CERTIFICATES	FIO	mdl				A	17 Jun 11	F	17 Jun 11
	222	238	01203 1.2.3	F. Ramos Trucking Cert Payroll 6-4-11	CERTIFICATES	FIO	mdl				A	17 Jun 11	F	20 Jun 11
	223	239	01203 1.2.3	Beltran Constructor Cert Payroll 1-23-11	CERTIFICATES	FIO	mdl				A	17 Jun 11	F	20 Jun 11
	224	240	01203 1.2.3	Beltran Constructor Cert Payroll 1-30-11	CERTIFICATES	FIO	mdl				A	17 Jun 11	F	20 Jun 11
	225	241	01203 1.2.3	Beltran Constructor Cert Payroll 2-6-11	CERTIFICATES	FIO	mdl				A	17 Jun 11	F	20 Jun 11
	226	242	01203 1.2.3	Beltran Constructor Cert Payroll 5-15-11	CERTIFICATES	FIO	mdl				A	17 Jun 11	F	20 Jun 11
	227	243	01203 1.2.3	Beltran Constructor Cert Payroll 5-22-11	CERTIFICATES	FIO	mdl				A	17 Jun 11	F	20 Jun 11
	228	244	01203 1.2.3	Beltran Constructor Cert Payroll 5-29-11	CERTIFICATES	FIO	mdl				A	17 Jun 11	F	20 Jun 11
	229	245	01203 1.2.3	Beltran Constructor Cert Payroll 6-5-11	CERTIFICATES	FIO	mdl				A	17 Jun 11	F	20 Jun 11
	230	246	01203 1.2.3	Jonasz Precast SF-1413	CERTIFICATES	FIO	mdl				A	11 Nov 11	FX	16 Nov 11
	231.1	247	01203 1.2.3	Jonasz Precast Cert of Insurance	CERTIFICATES	FIO	mdl				A	27 Oct 11	FX	27 Oct 11
	232.1	248	01203 1.2.3	Jensen Koerner Crane Cert of Insurance	CERTIFICATES	FIO	mdl				A	27 Oct 11	FX	27 Oct 11
	233	249	01203 1.2.3	Jensen Koerner Crane SF-1413	CERTIFICATES	FIO	mdl				A	20 Jun 11	FX	15 Aug 11
	234	250	01203 1.2.3	Alimi Certified Payroll 6-5-11	CERTIFICATES	FIO	mdl				A	21 Jun 11	F	27 Jun 11
	235	251	01203 1.2.3	Alimi Certified Payroll 6-12-11	CERTIFICATES	FIO	mdl				A	21 Jun 11	F	27 Jun 11
	236	252	01203 1.2.3	Alimi Certified Payroll 6-19-11	CERTIFICATES	FIO	mdl				A	29 Jun 11	F	01 Jul 11
	237	253	01203 1.2.3	Warren Lightning Rod Company SF-1413	PRODUCT DATA	FIO	mdl				A	29 Jun 11	F	01 Jul 11
	238	254	01203 1.2.3	CAPE Certified Payroll 6-11-11	CERTIFICATES	FIO	mdl				A	29 Jun 11	F	01 Jul 11
	239	255	01203 1.2.3	Ehrich Electric Cert. Payroll 5-28-11	CERTIFICATES	FIO	mdl				A	29 Jun 11	F	01 Jul 11
	240	256	01203 1.2.3	Ehrich Electric Cert. Payroll 6-4-11	CERTIFICATES	FIO	mdl				A	29 Jun 11	F	01 Jul 11
	241	257	01203 1.2.3	Ehrich Electric Cert. Payroll 6-11-11	CERTIFICATES	FIO	mdl				A	29 Jun 11	F	01 Jul 11
	242	258	01203 1.2.3	Ehrich Electric Cert. Payroll 6-18-11	CERTIFICATES	FIO	mdl				A	29 Jun 11	F	01 Jul 11
	243	259	01203 1.2.3	F. Ramos Trucking Cert Payroll 5-28-11	CERTIFICATES	FIO	mdl				A	29 Jun 11	F	01 Jul 11
	244	260	01203 1.2.3	Beltran Contractor Cert Payroll 6-12-11	CERTIFICATES	FIO	mdl				A	05 Jul 11	F	05 Jul 11
	245	261	01203 1.2.3	Beltran Contractor Cert Payroll 6-19-11	CERTIFICATES	FIO	mdl				A	05 Jul 11	F	05 Jul 11
	246	262	01203 1.2.3	F. Ramos Trucking Cert Payroll 6-11-11	CERTIFICATES	FIO	mdl				A	05 Jul 11	F	05 Jul 11

RANGE : ALL

SORT : SECTION & ITEM

SUBMITTAL REGISTER (ER 415-1-10)

TITLE AND LOCATION: Rockaway Wellfield Superfund Site, EM/WS,Rockaway Borough, East Main/Wall Street, Morris County, NJ

DATE: 15 Aug 2012

CONTRACTOR: CAPE Environmental Management Inc.

CONTRACT NUMBER: W912DQ-05-D-0001 0005

ACTIVITY No.	TRANS-MITTAL No.	ITEM No.	SPEC PARAGRAPH No.	DESCRIPTION OF SUBMITTAL	TYPE OF SUBMITTAL	CLASSI-FICATION FIO GA, DA or CR	CONTRACTOR REVIEWER	CONTRACTOR SCHEDULE DATES: SUBMIT NEEDED BY	APPROVAL NEEDED BY	MATERIAL NEEDED BY	CONTRACTOR ACTION: CODE	CORPS RECEIVED DATE	GOVERNMENT ACTION: CODE	CORPS RETURNED DATE
	247	263	01203 1.2.3	F. Ramos Trucking Cert Payroll 6-18-11	CERTIFICATES	FIO	mdl				A	05 Jul 11	F	05 Jul 11
	248	264	01203 1.2.3	CAPE Certified Payroll 6-18-11	CERTIFICATES	FIO	mdl				A	05 Jul 11	F	05 Jul 11
	249	265	01203 1.2.3	CAPE Certified Payroll 6-25-11	CERTIFICATES	FIO	mdl				A	11 Jul 11	F	12 Jul 11
	250	266	01203 1.2.3	Beltran Contractor Cert Payroll 6-26-11	CERTIFICATES	FIO	mdl				A	18 Jul 11	F	25 Jul 11
	251	267	01203 1.2.3	Beltran Contractor Cert Payroll 7-3-11	CERTIFICATES	FIO	mdl				A	18 Jul 11	F	25 Jul 11
	252	268	01203 1.2.3	Beltran Contractor Cert Payroll 7-10-11	CERTIFICATES	FIO	mdl				A	18 Jul 11	F	25 Jul 11
	253	269	01203 1.2.3	F. Ramos Trucking Cert Payroll 6-25-11	CERTIFICATES	FIO	mdl				A	18 Jul 11	F	25 Jul 11
	254	270	01203 1.2.3	F. Ramos Trucking Cert Payroll 7-2-11	CERTIFICATES	FIO	mdl				A	18 Jul 11	F	25 Jul 11
	255	271	01203 1.2.3	F. Ramos Trucking Cert Payroll 7-9-11	CERTIFICATES	FIO	mdl				A	18 Jul 11	F	25 Jul 11
	256	272	01203 1.2.3	CAPE Certified Payroll 7-2-11	CERTIFICATES	FIO	mdl				A	18 Jul 11	F	25 Jul 11
	257	273	01203 1.2.3	CAPE Certified Payroll 7-9-11	CERTIFICATES	FIO	mdl				A	21 Jul 11	F	25 Jul 11
	258	274	01203 1.2.3	Ehrich Electric Cert. Payroll 7-2-11	CERTIFICATES	FIO	mdl				A	25 Jul 11	F	29 Jul 11
	259	275	01203 1.2.3	Ehrich Electric Cert. Payroll 7-9-11	CERTIFICATES	FIO	mdl				A	25 Jul 11	F	29 Jul 11
	260	276	01203 1.2.3	Alimi Certified Payroll 6-26-11	CERTIFICATES	FIO	mdl				A	25 Jul 11	F	29 Jul 11
	261	277	01203 1.2.3	Alimi Certified Payroll 7-3-11	CERTIFICATES	FIO	mdl				A	25 Jul 11	F	29 Jul 11
	262	278	01203 1.2.3	Jonasz Precast Certified Payroll 6-26-11	CERTIFICATES	FIO	mdl				A	25 Jul 11	F	29 Jul 11
	263	279	01203 1.2.3	SEMCOR Cert Payroll 7-15-11	CERTIFICATES	FIO	mdl				A	28 Jul 11	F	29 Jul 11
	264	280	01203 1.2.3	CAPE Certified Payroll 7-16-11	CERTIFICATES	FIO	mdl				A	03 Aug 11	F	04 Aug 11
	265	281	01203 1.2.3	Stellar Machine Cert of Insurance	CERTIFICATES	FIO	mdl				A	03 Aug 11	F	04 Aug 11
	266	282	01203 1.2.3	Pave-Rite Certified Payroll 7-12-11	CERTIFICATES	FIO	mdl				A	03 Aug 11	F	04 Aug 11
	267	283	01203 1.2.3	Pave-Rite Certified Payroll 7-19-11	CERTIFICATES	FIO	mdl				A	03 Aug 11	F	04 Aug 11
	268	284	01203 1.2.3	Pave-Rite Certified Payroll 7-26-11	CERTIFICATES	FIO	mdl				A	03 Aug 11	F	04 Aug 11
	269	285	01203 1.2.3	Foster Contracting Cert. Payroll 7-12-11	CERTIFICATES	FIO	mdl				A	03 Aug 11	F	04 Aug 11
	270	286	01203 1.2.3	Foster Contracting Cert. Payroll 7-19-11	CERTIFICATES	FIO	mdl				A	03 Aug 11	F	04 Aug 11
	271	287	01203 1.2.3	Foster Contracting Cert. Payroll 7-26-11	CERTIFICATES	FIO	mdl				A	03 Aug 11	F	04 Aug 11
	272	288	01203 1.2.3	AC Shultes Cert. Payroll 5-1-11	CERTIFICATES	FIO	mdl				A	03 Aug 11	F	04 Aug 11
	273	289	01203 1.2.3	AC Shultes Cert. Payroll 6-26-11	CERTIFICATES	FIO	mdl				A	03 Aug 11	F	04 Aug 11
	274	290	01203 1.2.3	AC Shultes Cert. Payroll 7-3-11	CERTIFICATES	FIO	mdl				A	03 Aug 11	F	04 Aug 11
	275	291	01203 1.2.3	EMSI Certified Payroll 5-8-11	CERTIFICATES	FIO	mdl				A	03 Aug 11	F	04 Aug 11
	276	292	01203 1.2.3	EMSI Certified Payroll 7-3-11	CERTIFICATES	FIO	mdl				A	03 Aug 11	F	04 Aug 11
	277.1	293	01203 1.2.3	Boccella Precast SF-1413	CERTIFICATES	FIO	mdl				A	25 Oct 11	F	27 Oct 11
	278.1	294	01203 1.2.3	CAPE Certified Payroll 7-23-11	CERTIFICATES	FIO	mdl				A	25 Oct 11	F	27 Oct 11
	279	295	01203 1.2.3	F. Ramos Trucking Cert Payroll 7-16-11	CERTIFICATES	FIO	mdl				A	08 Aug 11	F	12 Aug 11
	280	296	01203 1.2.3	F. Ramos Trucking Cert Payroll 7-23-11	CERTIFICATES	FIO	mdl				A	08 Aug 11	F	12 Aug 11
	281	297	01203 1.2.3	F. Ramos Trucking Cert Payroll 7-30-11	CERTIFICATES	FIO	mdl				A	08 Aug 11	F	12 Aug 11

RANGE : ALL

SORT : SECTION & ITEM

SUBMITTAL REGISTER (ER 415-1-10)

TITLE AND LOCATION Rockaway Wellfield Superfund Site, EM/WS,Rockaway Borough, East Main/Wall Street, Morris County, NJ

DATE 15 Aug 2012

CONTRACTOR CAPE Environmental Management Inc.

CONTRACT NUMBER W912DQ-05-D-0001 0005

ACTIVITY No.	TRANS-MITTAL No.	ITEM No.	SPEC PARAGRAPH No.	DESCRIPTION OF SUBMITTAL	TYPE OF SUBMITTAL	CLASSI-FICATION FIO GA, DA or CR	CONTRACTOR REVIEWER	CONTRACTOR SCHEDULE DATES SUBMIT NEEDED BY	APPROVAL NEEDED BY	MATERIAL NEEDED BY	CONTRACTOR ACTION CODE	CORPS RECEIVED DATE	GOVERNMENT ACTION CODE	CORPS RETURNED DATE
	282	298	01203 1.2.3	Beltran Contractor Cert Payroll 7-17-11	CERTIFICATES	FIO	mdl				A	08 Aug 11	F	12 Aug 11
	283	299	01203 1.2.3	CAPE Certified Payroll 7-30-11	CERTIFICATES	FIO	mdl				A	09 Aug 11	F	12 Aug 11
	284	300	01203 1.2.3	Ehrich Electric Cert. Payroll 7-16-11	CERTIFICATES	FIO	mdl				A	10 Aug 11	F	12 Aug 11
	285	301	01203 1.2.3	Ehrich Electric Cert. Payroll 7-23-11	CERTIFICATES	FIO	mdl				A	10 Aug 11	F	12 Aug 11
	286	302	01203 1.2.3	Ehrich Electric Cert. Payroll 7-30-11	CERTIFICATES	FIO	mdl				A	10 Aug 11	F	12 Aug 11
	287	303	01203 1.2.3	Beltran Contractor Cert Payroll 8-7-11	CERTIFICATES	FIO	mdl				A	18 Aug 11	F	29 Aug 11
	288	304	01203 1.2.3	Stellar Machine SF-1413	PRODUCT DATA	FIO	mdl				A	18 Aug 11	F	18 Aug 11
	289	305	01203 1.2.3	Foster Contracting SF-1413	PRODUCT DATA	FIO	mdl				A	18 Aug 11	F	18 Aug 11
	290	306	01203 1.2.3	Ehrich Electric SF-1413	PRODUCT DATA	FIO	mdl				A	18 Aug 11	F	18 Aug 11
	291	307	01203 1.2.3	Alimi Certified Payroll 7-17-11	CERTIFICATES	FIO	mdl				A	18 Aug 11	F	19 Aug 11
	292	308	01203 1.2.3	Alimi Certified Payroll 7-24-11	CERTIFICATES	FIO	mdl				A	18 Aug 11	F	19 Aug 11
	293	309	01203 1.2.3	Alimi Certified Payroll 7-31-11	CERTIFICATES	FIO	mdl				A	18 Aug 11	F	19 Aug 11
	294	310	01203 1.2.3	Alimi Certified Payroll 8-7-11	CERTIFICATES	FIO	mdl				A	18 Aug 11	F	19 Aug 11
	295	311	01203 1.2.3	CAPE Certified Payroll 8-6-11	CERTIFICATES	FIO	mdl				A	01 Aug 11	F	29 Aug 11
	296	312	01203 1.2.3	Pave-Rite Certified Payroll 8-9-11	CERTIFICATES	FIO	mdl				A	24 Aug 11	F	29 Aug 11
	297	313	01203 1.2.3	Pave-Rite Certified Payroll 8-16-11	CERTIFICATES	FIO	mdl				A	24 Aug 11	F	29 Aug 11
	298	314	01203 1.2.3	Foster Contracting Cert. Payroll 8-9-11	CERTIFICATES	FIO	mdl				A	24 Aug 11	F	29 Aug 11
	299	315	01203 1.2.3	Foster Contracting Cert. Payroll 8-16-11	CERTIFICATES	FIO	mdl				A	24 Aug 11	F	29 Aug 11
	300	316	01203 1.2.3	Warren Lightning Rod Cert Payroll 8-6-11	CERTIFICATES	FIO	mdl				A	24 Aug 11	F	29 Aug 11
	301	317	01203 1.2.3	CAPE Certified Payroll 8-13-11	CERTIFICATES	FIO	mdl				A	11 Nov 11	FX	16 Nov 11
	302	318	01203 1.2.3	SEMCOR Cert. Payroll 8-5-11	CERTIFICATES	FIO	mdl				A	25 Aug 11	F	29 Aug 11
	303	319	01203 1.2.3	Beltran Contractor Cert. Payroll 8-14-11	CERTIFICATES	FIO	mdl				A	25 Aug 11	F	29 Aug 11
	304	320	01203 1.2.3	CAPE Certified Payroll 8-13-11	CERTIFICATES	FIO	mdl				A	25 Aug 11	F	29 Aug 11
	305	321	01203 1.2.3	Foster Contracting Cert. Payroll 8-23-11	CERTIFICATES	FIO	mdl				A	31 Aug 11	F	01 Sep 11
	306	322	01203 1.2.3	Pave-Rite Certified Payroll 8-23-11	CERTIFICATES	FIO					A	31 Aug 11	F	01 Sep 11
	307	323	01203 1.2.3	Bairrada Certified Payroll 8-6-11	CERTIFICATES	FIO	mdl				A	31 Aug 11	F	01 Sep 11
	308	324	01203 1.3.1	CAPE Certified Payroll 8-20-11	PRODUCT DATA	FIO	mdl				A	02 Sep 11	F	06 Sep 11
	309	325	01203 1.3.1	CAPE Certified Payroll 8-27-11	CERTIFICATES	GA	mdl				A	16 Sep 11	F	16 Sep 11
	310	326	01203 1.3.1	Alpine Painting CertifiedPayroll 7/27/11	CERTIFICATES	FIO	mdl				A	16 Sep 11	F	16 Sep 11
	311	327	01203 1.3.1	CAPE Certified Payroll 03SEPT11	CERTIFICATES	FIO					A	21 Sep 11	F	22 Sep 11
	312	328	01203 1.2.3	CAPE Certified Payroll 10SEP11	CERTIFICATES	FIO	mdl				A	24 Sep 11	F	26 Sep 11
	313	329	01203 1.2.3	Abbott OReilly Certified Payroll 20JUL11	CERTIFICATES	FIO	SysAdmin				A	26 Sep 11	F	26 Sep 11
	314	330	01203 1.2.3	Abbot OReilly Certified Payroll 03AUG11	CERTIFICATES	FIO					A	26 Sep 11	F	26 Sep 11
	315	331	01203 1.2.3	Abbot OReilly Certified Payroll 31AUG11	CERTIFICATES	FIO					A	26 Sep 11	F	26 Sep 11
	316	332	01203 1.2.3	CAPE Certified Payroll 17SEPT11	CERTIFICATES	FIO					A	03 Oct 11	F	03 Oct 11

RANGE : ALL

SORT : SECTION & ITEM

SUBMITTAL REGISTER (ER 415-1-10)

TITLE AND LOCATION Rockaway Wellfield Superfund Site, EM/WS,Rockaway Borough, East Main/Wall Street, Morris County, NJ

DATE 15 Aug 2012

CONTRACTOR CAPE Environmental Management Inc.

CONTRACT NUMBER W912DQ-05-D-0001 0005

ACTIVITY No.	TRANS-MITTAL No.	ITEM No.	SPEC PARAGRAPH No.	DESCRIPTION OF SUBMITTAL	TYPE OF SUBMITTAL	CLASSI-FICATION FIO GA, DA or CR	CONTRACTOR REVIEWER	CONTRACTOR SCHEDULE DATES SUBMIT NEEDED BY	APPROVAL NEEDED BY	MATERIAL NEEDED BY	CONTRACTOR ACTION CODE	CORPS RECEIVED DATE	GOVERNMENT ACTION CODE	CORPS RETURNED DATE
	317	333	01203 1.2.3	A.C. Schultes Certified Payroll 24JUL11	CERTIFICATES	FIO					A	03 Oct 11	F	03 Oct 11
	318	334	01203 1.2.3	A.C. Schultes Certified Payrolls 31JUL11	CERTIFICATES	FIO	SysAdmin				A	03 Oct 11	F	03 Oct 11
	319	335	01203 1.2.3	A.C. Schultes Certified Payroll 07AUG11	CERTIFICATES	FIO					A	03 Oct 11	F	03 Oct 11
	320	336	01203 1.2.3	A.C. Schultes Certified Payroll 21AUG11	CERTIFICATES	FIO					A	03 Oct 11	F	03 Oct 11
	321	337	01203 1.2.3	A.C. Schultes Certified Payroll 28AUG11	CERTIFICATES	FIO					A	03 Oct 11	F	03 Oct 11
	322	338	01203 1.2.3	A.C. Schultes Certified Payrolls 04SEPT1	CERTIFICATES	FIO					A	03 Oct 11	F	03 Oct 11
	323	339	01203 1.2.3	Enviroscapes SF1413	CERTIFICATES	FIO					A	03 Oct 11	F	03 Oct 11
	324	340	01203 1.2.3	Amquip Crane Certified Payroll 06AUG11	CERTIFICATES	FIO					A	03 Oct 11	F	03 Oct 11
	325	341	01203 1.2.3	Morris Certified Payroll 8-28-11	CERTIFICATES	FIO					A	10 Oct 11	F	11 Oct 11
	326	342	01203 1.2.3	Morris Certified Payroll 9-4-11	CERTIFICATES	FIO					A	10 Oct 11	F	11 Oct 11
	327	343	01203 1.2.3	Morris Certified Payroll 9-11-11	CERTIFICATES	FIO					A	10 Oct 11	F	11 Oct 11
	328	344	01203 1.2.3	Warren Certified Payroll 9-17-11	CERTIFICATES	FIO					A	10 Oct 11	F	11 Oct 11
	329	345	01203 1.2.3	CAPE Certified Payroll 9-24-11	CERTIFICATES	FIO					A	10 Oct 11	F	11 Oct 11
	330	346	01203 1.2.3	Ehrich Certified Payroll 8-13-11	CERTIFICATES	FIO					A	10 Oct 11	F	11 Oct 11
	331	347	01203 1.2.3	Ehrich Certified Payroll 8-20-11	CERTIFICATES	FIO					A	10 Oct 11	F	11 Oct 11
	332	348	01203 1.2.3	Ehrich Certified Payroll 8-27-11	CERTIFICATES	FIO					A	10 Oct 11	F	11 Oct 11
	333	349	01203 1.2.3	Ehrich Certified Payroll 9-3-11	CERTIFICATES	FIO					A	10 Oct 11	F	11 Oct 11
	334	350	01203 1.2.3	Ehrich Certified Payroll 9-10-11	CERTIFICATES	FIO					A	10 Oct 11	F	11 Oct 11
	335	351	01203 1.2.3	Ehrich Certified Payroll 9-17-11	CERTIFICATES	FIO					A	10 Oct 11	F	11 Oct 11
	336	352	01203 1.2.3	CAPE Certified Payroll 01OCT11	CERTIFICATES	FIO					A	13 Oct 11	F	17 Oct 11
	337	353	01203 1.2.3	Hi Volt Electric LLC COI	PRODUCT DATA	GA					A	17 Oct 11	E	17 Oct 11
	338	354	01203 1.1	Hi Volt Electric SF 1413	PRECON SUBMTL	GA					A	17 Oct 11	B	17 Oct 11
	339	355	01203 1.2.3	CAPE Certified Payroll 08OCT2011	CERTIFICATES	FIO					A	25 Oct 11	F	27 Oct 11
	340	356	01203 1.2.3	York Fence Certified Payroll 11SEPT11	CERTIFICATES	FIO					A	25 Oct 11	F	27 Oct 11
	341	357	01203 1.2.3	Warren Certified Payroll 10SEPT11	CERTIFICATES	FIO					A	25 Oct 11	F	27 Oct 11
	342	358	01203 1.2.3	A.C. Schultes Certified Payroll 18SEPT11	CERTIFICATES	FIO					A	25 Oct 11	F	27 Oct 11
	343	359	01203 1.2.3	A.C. Schultes Certified Payroll 25SEPT11	CERTIFICATES	FIO					A	25 Oct 11	F	27 Oct 11
	344	360	01203 1.2.3	A.C. Schultes Certified Payroll 02OCT11	CERTIFICATES	FIO					A	25 Oct 11	F	27 Oct 11
	345	361	01203 1.2.3	A.C. Schultes Certified Payrolls 09OCT11	CERTIFICATES	FIO					A	25 Oct 11	F	27 Oct 11
	346	362	01203 1.2.3	CAPE Certified Payroll 15OCT11	CERTIFICATES	FIO					A	08 Nov 11	F	03 Nov 11
	347	363	01203 1.2.3	York Fence Certified Payroll 16OCT11	CERTIFICATES	FIO					A	02 Nov 11	F	03 Nov 11
	348	364	01203 1.2.3	Intex Certified Payroll 04SEPT11	CERTIFICATES	FIO					A	02 Nov 11	F	03 Nov 11
	349	365	01203 1.2.3	Intex Certified Payroll 11SEPT11	CERTIFICATES	FIO					A	02 Nov 11	F	03 Nov 11
	350	366	01203 1.2.3	Intex Certified Payroll 18SEPT11	CERTIFICATES	FIO					A	03 Nov 11	F	03 Nov 11
	351	367	01203 1.2.3	CAPE Certified Payroll 22OCT11	CERTIFICATES	FIO					A	03 Nov 11	F	04 Nov 11

RANGE : ALL

SORT : SECTION & ITEM

SUBMITTAL REGISTER (ER 415-1-10)

TITLE AND LOCATION Rockaway Wellfield Superfund Site, EM/WS,Rockaway Borough, East Main/Wall Street, Morris County, NJ

DATE 15 Aug 2012

CONTRACTOR CAPE Environmental Management Inc.

CONTRACT NUMBER W912DQ-05-D-0001 0005

ACTIVITY No.	TRANS-MITTAL No.	ITEM No.	SPEC PARAGRAPH No.	DESCRIPTION OF SUBMITTAL	TYPE OF SUBMITTAL	CLASSI-FICATION FIO GA, DA or CR	CONTRACTOR REVIEWER	CONTRACTOR SCHEDULE DATES SUBMIT NEEDED BY	APPROVAL NEEDED BY	MATERIAL NEEDED BY	CONTRACTOR ACTION CODE	CORPS RECEIVED DATE	GOVERNMENT ACTION CODE	CORPS RETURNED DATE
	352	368	01203 1.2.3	Foster Certified Payroll 25OCT11	PRODUCT DATA	FIO					A	16 Nov 11	F	21 Nov 11
	353	369	01203 1.2.3	Pave - Rite Certified Payroll 25OCT11	PRODUCT DATA	FIO					A	16 Nov 11	F	21 Nov 11
	354	370	01203 1.2.3	CAPE Certified Payroll 11-12-11	CERTIFICATES	FIO					A	20 Jan 12	F	20 Jan 12
	355	371	01203 1.2.3	Alpine Certified Payroll 10-11-2011	CERTIFICATES	FIO	SysAdmin				A	10 Jan 12	F	20 Jan 12
	356	372	01203 1.2.3	Alpine Certified Payroll 10-25-11	CERTIFICATES	FIO					A	10 Jan 12	F	20 Jan 12
	357	373	01203 1.2.3	Alimi Certified Payroll 8-14-11	CERTIFICATES	FIO					A	10 Jan 12	F	20 Jan 12
	358	374	01203 1.2.3	Alimi Certified Payroll 8-21-11	CERTIFICATES	FIO					A	10 Jan 12	F	20 Jan 12
	359	375	01203 1.2.3	Alimi Certified Payroll 9-3-11	CERTIFICATES	FIO					A	10 Jan 12	F	20 Jan 12
	360	376	01203 1.2.3	Alimi Certified Payroll 9-26-11	CERTIFICATES	FIO					A	10 Jan 12	F	20 Jan 12
	361	377	01203 1.2.3	Bairrada Certified Payroll 10-28-11	CERTIFICATES	FIO					A	10 Jan 12	F	20 Jan 12
	362	378	01203 1.2.3	Morris Certified Payroll 10-09-11	CERTIFICATES	FIO					A	10 Jan 12	F	20 Jan 12
	363	379	01203 1.2.3	Morris Certified Payroll 10-16-2011	CERTIFICATES	FIO					A	10 Jan 12	F	20 Jan 12
	364	380	01203 1.2.3	Morris Certified Payroll 10-30-11	CERTIFICATES	FIO	SysAdmin				A	10 Jan 12	F	20 Jan 12
	365	381	01203 1.2.3	Stellar Certified Payroll 7-24-11	CERTIFICATES	FIO					A	10 Jan 12	F	20 Jan 12
	366	382	01203 1.2.3	Stellar Certified Payroll 7-31-11	CERTIFICATES	FIO					A	10 Jan 12	F	20 Jan 12
	367	383	01203 1.2.3	Stellar Certified Payroll 8-21-11	CERTIFICATES	FIO					A	10 Jan 12	A	03 Feb 12
	368	384	01203 1.2.3	Stellar Certified Payroll 10-2-11	CERTIFICATES	FIO					A	10 Jan 12	F	20 Jan 12
	369	385	01203 1.2.3	Stellar Certified Payroll 10-16-11	CERTIFICATES	FIO					A	10 Jan 12	F	20 Jan 12
	370	387	01203 1.2.3	CAPE Certified Payroll 12-3-11	CERTIFICATES	FIO					A	10 Jan 12	F	20 Jan 12
	371	388	01203 1.2.3	CAPE Certified Payroll 12-17-11	CERTIFICATES	FIO					A	10 Jan 12	F	20 Jan 12
	372	389	01203 1.2.3	Silva's Mechanical CP 111511	CERTIFICATES	FIO	SysAdmin				A	24 Apr 12	F	24 May 12
	373	390	01203 1.2.3	Forte Plumbing - CP 090311	CERTIFICATES	FIO	SysAdmin				A	24 Apr 12	F	24 May 12
	374	391	01203 1.2.3	Advanced Coring / Cutting - CP 110611	CERTIFICATES	FIO	SysAdmin				A	24 Apr 12	F	24 May 12
	375	392	01203 1.2.3	BTNJ / Power & Autmation - CP 102311	CERTIFICATES	FIO	SysAdmin				A	24 Apr 12	F	24 May 12
	375	393	01203 1.2.3	BTNJ / Power & Automation - CP 103011	CERTIFICATES	FIO	SysAdmin				A	24 Apr 12	F	24 May 12
	375	394	01203 1.2.3	BTNJ / Power & Automation - CP 110611	CERTIFICATES	FIO	SysAdmin				A	24 Apr 12	F	24 May 12
	375	395	01203 1.2.3	BTNJ / Power & Automation - CP 111311	CERTIFICATES	FIO	SysAdmin				A	24 Apr 12	F	24 May 12
	375	396	01203 1.2.3	BTNJ / Power & Automation - CP 112011	CERTIFICATES	FIO	SysAdmin				A	24 Apr 12	F	24 May 12
	375	397	01203	BTNJ / Power & Automation - CP 112711	CERTIFICATES	FIO	SysAdmin				A	24 Apr 12	F	24 May 12
	376	398	01203 1.2.3	High Energy Electrical Tstng - CP 110211	CERTIFICATES	FIO	SysAdmin				A	24 Apr 12	F	24 May 12
	376	399	01203 1.2.3	High Energy Electrical Tstng - CP 112311	CERTIFICATES	FIO	SysAdmin				A	24 Apr 12	F	24 May 12
	376	400	01203 1.2.3	High Energy Electrical Tstng - CP 120711	CERTIFICATES	FIO	SysAdmin				A	24 Apr 12	F	24 May 12
SECTION - 01270			**Measurement and Payment**											
0001	1	1	01270	Pay Estimate 001 (Partial)	CERTIFICATES	GA	mdl	22 Nov 10	22 Nov 10	22 Nov 10	A	20 Aug 07	A	20 Aug 07
0001	2	2	01270	Pay Estimate 002 (Partial)	CERTIFICATES	GA	mdl	22 Nov 10	22 Nov 10	22 Nov 10	A	20 Aug 07	A	20 Aug 07

RANGE : ALL

SORT : SECTION & ITEM

SUBMITTAL REGISTER (ER 415-1-10)

TITLE AND LOCATION: Rockaway Wellfield Superfund Site, EM/WS,Rockaway Borough, East Main/Wall Street, Morris County, NJ

DATE: 15 Aug 2012

CONTRACTOR: CAPE Environmental Management Inc.

CONTRACT NUMBER: W912DQ-05-D-0001 0005

ACTIVITY No.	TRANS-MITTAL No.	ITEM No.	SPEC PARAGRAPH No.	DESCRIPTION OF SUBMITTAL	TYPE OF SUBMITTAL	CLASSI-FICATION FIO GA, DA or CR	CONTRACTOR REVIEWER	CONTRACTOR SCHEDULE DATES: SUBMIT NEEDED BY	APPROVAL NEEDED BY	MATERIAL NEEDED BY	CONTRACTOR ACTION: CODE	CORPS RECEIVED DATE	GOVERNMENT ACTION: CODE	CORPS RETURNED DATE
	3	3	01270	Pay Estimate 003 (partial)	CERTIFICATES	GA	mdl				A	20 Aug 07	A	20 Aug 07
	4	4	01270	Pay Estimate 004 (partial)	CERTIFICATES	GA	mdl				A	20 Aug 07	A	20 Aug 07
	5	5	01270	Pay Estimate 005 (partial)	CERTIFICATES	GA	mdl				A	29 Aug 07	F	30 Aug 07
	6	6	01270	Pay Estimate 006 (partial)	CERTIFICATES	GA	mdl				A	27 Sep 07	A	20 Sep 07
	7	7	01270	Pay Estimate 007 (partial)	CERTIFICATES	GA	mdl				A	29 Oct 07	A	29 Oct 07
	8	8	01270	Pay Estimate 008 (partial)	CERTIFICATES	GA	mdl				A	12 Dec 07	A	19 Dec 07
	9	9	01270	Pay Estimate 009 (partial)	CERTIFICATES	GA	mdl				A	18 Jan 08	A	18 Feb 08
	10	10	01270	Pay Estimate 010 (partial)	CERTIFICATES	GA	mdl				A	25 Feb 08	A	25 Feb 08
	11	11	01270	Pay Estimate 011 (partial)	CERTIFICATES	GA	mdl				A	19 Mar 08	F	16 Aug 10
SECTION - 01320			**Project Schedule**											
0001	1	1	01320 1.4.1	Preliminary Project Schedule	PRECON SUBMTL	GA	mdl	22 Nov 10	22 Nov 10	22 Nov 10	A	20 Aug 07	B	07 May 07
	2	2	01320 1.4.3	Periodic Update 01	PRODUCT DATA	GA	mdl				A	12 Sep 07	B	12 Sep 07
	5	2.2	01320	Periodic Update, Rev 2	PRODUCT DATA	GA	mdl				A	12 Dec 07	C	12 Dec 07
	3	3	01320	Periodic Update 02	PRODUCT DATA	FIO	mdl				A	29 Oct 07	E	02 Nov 07
	4	4	01320	Periodic Update 02, rev#1	PRODUCT DATA	FIO					A	29 Nov 07	E	29 Nov 07
	6	5	01320	Periodic Schedule Update 005	PRODUCT DATA	FIO					A	14 May 10	F	27 May 10
	7	6	01320	Periodic Schedule Update 006		DA/CR					A	14 Jun 10	B	16 Jul 10
	8	7	01320	Periodic Schedule Update 007	SCHEDULES	GA					A	12 Aug 10	B	16 Aug 10
	9	8	01320 1.8	Periodic Schedule Update 008	SCHEDULES	DA/CR					A	08 Sep 10	B	10 Sep 10
	10.1	9	01320 1.8	Periodic Schedule Update 009	SCHEDULES	DA/CR	SysAdmin				A	19 Nov 10	FX	19 Nov 10
	11	9.1	01320 1.8	Periodic Schedule Update 010	SCHEDULES	GA					A	15 Nov 11	B	22 Nov 10
	12	10	01320 1.4.3	Periodic Schedule Update 011	PRODUCT DATA	GA	mdl				A	17 Dec 10	C	07 Jan 11
	13	12	01320 1.4.3	Periodic Schedule Update 012	PRODUCT DATA	GA	mdl				A	19 Jan 11	B	31 Jan 11
	14	13	01320 1.4.3	Periodic Schedule Update 013	PRODUCT DATA	GA	mdl				A	01 Mar 11	B	25 Mar 11
	15	14	01320 1.4.3	Periodic Schedule Update 014	PRODUCT DATA	GA	mdl				A	31 Mar 11	B	18 Apr 11
	16	15	01320 1.4.3	Periodic Schedule Update 015	PRODUCT DATA	GA	mdl				A	19 May 11	B	01 Jun 11
	17	16	01320 1.4.3	Periodic Schedule Update 016	PRODUCT DATA	GA	mdl				A	13 Jun 11	B	27 Jun 11
	18.1	17	01320 1.4.3	Periodic Schedule Update 017	PRODUCT DATA	GA	mdl				A	17 Aug 11	F	19 Aug 11
	19	18	01320 1.4.3	Periodic Schedule Update 018	PRODUCT DATA	GA	mdl				A	08 Aug 11	B	16 Aug 11
	20	19	01320 1.4.3	Periodic Schedule Update 019	PRODUCT DATA	GA	mdl				A	16 Sep 11	B	20 Sep 11
	21	20	01320 1.4.3	Periodic Schedule UPdate 020	PRODUCT DATA	GA					A	24 Oct 11	B	03 Nov 11
	22	21	01320 1.4.3	Periodic Schedule Update 021	PRODUCT DATA	GA					A	08 Nov 11	C	15 Nov 11
SECTION - 01351			**Safety, Health & Emer Response-HTRW/UST**											
0001	1	1	01351 1.3.1	Accident Prevention Plan - DRAFT	PRECON SUBMTL	GA	mdl	22 Nov 10	22 Nov 10	22 Nov 10	A	20 Aug 07	F	22 Jan 08
0001	2	1.2	01351 1.3.1	Accident Prevention Plan - FINAL	PRECON SUBMTL	GA	mdl	22 Nov 10	22 Nov 10	22 Nov 10	A	20 Aug 07	G	02 Feb 11

RANGE : ALL

SORT : SECTION & ITEM

SUBMITTAL REGISTER (ER 415-1-10)

TITLE AND LOCATION Rockaway Wellfield Superfund Site, EM/WS,Rockaway Borough, East Main/Wall Street, Morris County, NJ

DATE 15 Aug 2012

CONTRACTOR CAPE Environmental Management Inc.

CONTRACT NUMBER W912DQ-05-D-0001 0005

ACTIVITY No.	TRANS-MITTAL No.	ITEM No.	SPEC PARAGRAPH No.	DESCRIPTION OF SUBMITTAL	TYPE OF SUBMITTAL	CLASSI-FICATION FIO GA, DA or CR	CONTRACTOR REVIEWER	CONTRACTOR SCHEDULE DATES SUBMIT NEEDED BY	APPROVAL NEEDED BY	MATERIAL NEEDED BY	CONTRACTOR ACTION CODE	CORPS RECEIVED DATE	GOVERNMENT ACTION CODE	CORPS RETURNED DATE
0001	2	2	01351 1.3.1	RTC - Draft APP	PRECON SUBMTL	GA	mdl	22 Nov 10	22 Nov 10	22 Nov 10	A	20 Aug 07	G	02 Feb 11
0001	3	3	01351	SSHO Delegation of Authority	QUALIFICATIONS	GA	mdl	22 Nov 10	22 Nov 10	22 Nov 10	A	20 Aug 07	G	02 Feb 11
A0940		6	01351 1.3.3	Activity Hazard Analysis		GA	mdl							
		7	01351 1.3.4	Air Monitoring Data		FIO								
		8	01351 1.3.5	Personnel Health and Safety Certificates		FIO								
		9	01351 1.3.6	Safety and Health Manager Statements		FIO								
		10	01351 1.3.7	Certificate of Worker/Visitor Acknowledg		FIO								
		12	01351	CAPE Delegation of Authority (SSHO) Lett		GA								
	4	13	01351	SSHO Delegation Letter-070725	QUALIFICATIONS	GA	mdl				A	20 Aug 07	F	20 Aug 07
	5	14	01351	SSHO Delegation of Authority-070807	QUALIFICATIONS	GA	mdl				A	13 Aug 07	F	13 Aug 07
	6	15	01351 1.2	Accident Prevention Plan, Revision 1	PRECON SUBMTL	GA	mdl				A	23 Aug 07	A	28 Aug 07
	2.3	15.1	01351 1.3.1	Accident Prevention Plan, Rev 3	PRECON SUBMTL	GA	mdl				A	19 May 11	B	13 Jun 11
	7	16	01351	SSHO DoA - McNeil 17NOV2010	PRECON SUBMTL	GA	mdl				A	24 Nov 10	E	16 Dec 10
	8	17	01351	Alt SSHO DoA - Beatty 17NOV2010	PRECON SUBMTL	GA	mdl				A	24 Nov 10	A	16 Dec 10
	9	18	01351	Alt SSHO DoA - Ferroni 17NOV2010	PRECON SUBMTL	GA	mdl				A	24 Nov 10	C	16 Dec 10
		19	01351 1.3.1	Site Safety and Health Plan	PRECON SUBMTL	GA								
		20	01351 1.3.2	Weekly Safety and Accident Reports	PRODUCT DATA	FIO								
		21	01351 1.3.3	Activity Hazard Analysis	PRODUCT DATA	GA								
		22	01351 1.3.4	Air Monitoring Data	PRODUCT DATA	FIO								
		23	01351 1.3.5	Personnel Health and Safety Certificates	CERTIFICATES	FIO								
		24	01351 1.3.6	Safety and Health Manager Statements	CERTIFICATES	FIO								
		25	01351 1.3.7	Certificate of Worker/Visitor Acknowledg	CERTIFICATES	FIO								
	17	26	01351 1.3.8	Project Safety and Health Phase-Out Repo	CLOSEOUT SUBMTL	FIO	SysAdmin				A	24 May 12	C	24 May 12
	10	27	01351 1.3.1	Lead Hazard Compliance Plan	PRECON SUBMTL	GA	mdl				A	07 Dec 10	B	04 Feb 11
	11	28	01351 1.3.1	Asbestos Hazard Abatement Plan	PRECON SUBMTL	GA	mdl				A	07 Dec 10	B	04 Feb 11
	12	29	01351 1.2.3	SSHO DoA - Landle 14JAN2011		GA	mdl				A	17 Jan 11	B	19 Jan 11
	13	30	01351 1.2.3	2nd Alt SSHO DoA - Caudill 20APR2011	PRODUCT DATA	GA	mdl				A	20 Apr 11	B	28 Apr 11
	14	31	01351 1.2.3	2nd Alt SSHO DoA - C. Jones 11JUN2011	PRODUCT DATA	GA	mdl				A	13 Jun 11	B	20 Jun 11
	15	32	01351 1.2.3	Thomas Bykow 2nd Alt SSHO 14OCT11	PRODUCT DATA	GA					A	17 Oct 11	B	04 Nov 11
	16	33	01351 1.2.3	Eric Lynch DoA CQCSM / SSHO	PRODUCT DATA	GA					A	18 Oct 11	B	18 Oct 11
	18	34	01351 1.3.8	Health & Safety Phase-out Report - Final	CLOSEOUT SUBMTL	FIO	SysAdmin				A			
SECTION - 01355			**Environmental Protection**											
A1280	1	1	01355	Soil Erosion & Sediment Control Plan,R0	CERTIFICATES	FIO	mdl	13 Mar 11	13 Mar 11	13 Mar 11	A	29 Aug 07	FX	01 Jun 07
A1280	6	2	01355 1.2.1	Environmental Protection Plan	PRECON SUBMTL	GA	mdl	13 Mar 11	13 Mar 11	13 Mar 11	A	19 Mar 08	A	28 Aug 07
	2	3	01355	MCSCD SESC Plan Approval	PRODUCT DATA	FIO	mdl				A	29 Oct 07	F	31 Oct 07

RANGE : ALL

SORT : SECTION & ITEM

SUBMITTAL REGISTER (ER 415-1-10)

TITLE AND LOCATION: Rockaway Wellfield Superfund Site, EM/WS,Rockaway Borough, East Main/Wall Street, Morris County, NJ

DATE: 15 Aug 2012

CONTRACTOR: CAPE Environmental Management Inc.

CONTRACT NUMBER: W912DQ-05-D-0001 0005

ACTIVITY No.	TRANS-MITTAL No.	ITEM No.	SPEC PARAGRAPH No.	DESCRIPTION OF SUBMITTAL	TYPE OF SUBMITTAL	CLASSI-FICATION FIO GA, DA or CR	CONTRACTOR REVIEWER	CONTRACTOR SCHEDULE DATES: SUBMIT NEEDED BY	APPROVAL NEEDED BY	MATERIAL NEEDED BY	CONTRACTOR ACTION: CODE	CORPS RECEIVED DATE	GOVERNMENT ACTION: CODE	CORPS RETURNED DATE
	3	4	01355	WAPA Permit	DATA	FIO					A	21 Feb 08	F	19 May 08
	4	5	01355	APC Online Permit	DATA	FIO					A	22 Feb 08	F	29 Feb 08
	5	6	01355	Application for 2nd-level AirRisk Screen	DATA	FIO	mdl				A	19 Mar 08	F	19 May 08
	7.1	7	01355 1.1	NJDEP NJPDES Permit Equivalency	DATA	FIO	SysAdmin				A	17 Oct 11	F	18 Oct 11
	8	8	01355 1.1	BGR Permit Equivalent	DESIGN DATA	FIO					A	10 Nov 10	F	15 Nov 10
	9	9	01355 1.1	Physical Connection Permit Application	RECORDS	FIO					A	12 Nov 10	F	15 Nov 10
	10	10	01355 1.1	BSDW Permit Application	RECORDS	FIO					A	12 Nov 10	F	15 Nov 10
	11	11	01355	Construction Permit - Temp Elec Svc	PRECON SUBMTL	FIO	mdl				A	24 Nov 10	F	02 Dec 10
	12	12	01355	Demolition Permit - Pumphouse	PRECON SUBMTL	FIO	mdl				A	24 Nov 10	F	02 Dec 10
	13	13	01355 2.4.4	MCSCD 72-hr Notification	PRECON SUBMTL	FIO	mdl				A	19 Nov 10	F	31 Jan 11
	17	14	01355 1.2.1	2010 Drilling Permits	PRECON SUBMTL	FIO	mdl				A	10 Dec 10	F	13 Dec 10
	14	15	01355 1.3.1	Road Opening Permit	PRODUCT DATA	FIO	mdl				A	10 Dec 10	F	13 Dec 10
	15	16	01355 1.2.1	Lead and Asbestos Evaluation Report	PRODUCT DATA	FIO	mdl				A	10 Dec 10	F	13 Dec 10
	16	17	01355 1.2.1	Structural Evaluation for Demolition	PRODUCT DATA	FIO	mdl				A	10 Dec 10	F	13 Dec 10
	18	18	01355 1.1	BSDW Permit Admin Complete Letter	PRODUCT DATA	FIO	mdl				A	21 Dec 10	F	29 Dec 10
	19	19	01355 1.1	FHA Individual Permit Equivalent App	PRODUCT DATA	FIO	mdl				A	20 Dec 10	F	29 Dec 10
	20	20	01355 1.1	TWA Permit Equivalency App	PRODUCT DATA	FIO	mdl				A	20 Dec 10	F	29 Dec 10
	21	21	01355 1.1	Rockaway Construction Permit	PRODUCT DATA	FIO	mdl				A	19 Jan 11	F	24 Jan 11
	22	22	01355 1.1	QTRLY Monitoring Report OCT-DEC 2010	PRODUCT DATA	FIO	mdl				A	19 Jan 11	F	24 Jan 11
	23	23	01355 1.1	Physical Connection Permit	PRODUCT DATA	FIO	mdl				A	03 Mar 11	F	07 Mar 11
	24	24	01355 1.1	NJDEP DSW Permit Equivalency Approval	PRODUCT DATA	FIO	mdl				A	04 Mar 11	F	14 Mar 11
	25	25	01355 1.1	APC Pre-construction Permit Equivalency	PRODUCT DATA	FIO	mdl				A	14 Mar 10	F	17 Mar 11
	26	26	01355 1.1	APC Permit Activity Number	PRODUCT DATA	FIO	mdl				A	14 Mar 11	F	17 Mar 11
	27	27	01355 1.1	APC Permit Equivalency Approval	PRODUCT DATA	FIO	mdl				A	17 Mar 11	F	
A2310	28	28	01355 1.1	FHA Permit - Approved	PRODUCT DATA	FIO	mdl	10 Jul 11	09 Aug 11	09 Aug 11	A	31 Mar 11	F	05 May 11
	29	29	01355 1.1	Safe Drinking Water Permit	PRODUCT DATA	FIO	mdl				A	10 Jun 11	F	10 Jun 11
	30	30	01355 N/A	Permit Equivalency 2588E	RECORDS	FIO	SysAdmin				A	20 Jan 12	F	20 Jan 12
SECTION - 01380			**Project Photographs**											
	3	1	01380 1.2.1	Pre-Con Photos - Parking Lot	PRODUCT DATA	FIO	mdl				A	29 Aug 07	F	27 Aug 07
	2	2	01380 1.2.1	Project Photographs - Pre-Con	PRODUCT DATA	FIO	mdl				A	14 Aug 07	F	14 Aug 07
	2	3	01380 1.2.1	Project Photos - Progress	PRODUCT DATA	FIO	mdl				A	14 Aug 07	F	14 Aug 07
	4	4	01380 1.3.1	Project Photos-Progress (8/9 - 8/24/07)	PRODUCT DATA	FIO	mdl				A	06 Sep 07	F	12 Sep 07
	5	5	01380	Progress Photos 8/27 - 9/7/07	PRODUCT DATA	FIO	mdl				A	16 Oct 07	F	23 Oct 07
	6	6	01380	Progress Photos 091007 - 092807	PRODUCT DATA	FIO	mdl				A	29 Oct 07	F	31 Oct 07
	7	7	01380	Progress Photos 100107 - 101907	PRODUCT DATA	FIO	mdl				A	29 Oct 07	F	31 Oct 07

RANGE : ALL

SORT : SECTION & ITEM

SUBMITTAL REGISTER (ER 415-1-10)

TITLE AND LOCATION Rockaway Wellfield Superfund Site, EM/WS,Rockaway Borough, East Main/Wall Street, Morris County, NJ

DATE 15 Aug 2012

CONTRACTOR CAPE Environmental Management Inc.

CONTRACT NUMBER W912DQ-05-D-0001 0005

ACTIVITY No.	TRANS-MITTAL No.	ITEM No.	SPEC PARAGRAPH No.	DESCRIPTION OF SUBMITTAL	TYPE OF SUBMITTAL	CLASSI-FICATION FIO GA, DA or CR	CONTRACTOR REVIEWER	CONTRACTOR SCHEDULE DATES SUBMIT NEEDED BY	APPROVAL NEEDED BY	MATERIAL NEEDED BY	CONTRACTOR ACTION CODE	CORPS RECEIVED DATE	GOVERNMENT ACTION CODE	CORPS RETURNED DATE
	8.1	8	01380 1.2.1	Pre-Con Photos NOV 2010	PRODUCT DATA	FIO	mdl				A	15 Nov 11	C	21 Nov 11
	9	9	01380 1.2.1	ACM Abatement 23NOV2010	PRODUCT DATA	FIO	mdl				A	10 Dec 10	B	16 Dec 10
	10	10	01380 1.2.1	December 2010 Progress Photos	PRODUCT DATA	FIO	mdl				A	07 Jan 11	F	11 Jan 11
	11	11	01380 1.2.1	January 2011 Progress Photos	PRODUCT DATA	FIO	mdl				A	07 Feb 11	F	25 Feb 11
	12	12	01380 1.2.1	February 2011 Progress Photos	PRODUCT DATA	FIO	mdl				A	08 Mar 11	F	12 Mar 11
	13	13	01380 1.2.1	March 2011 Progress Photos	PRODUCT DATA	FIO	mdl				A	11 Apr 11	B	19 Apr 11
	14	14	01380 1.2.1	April 2011 Progress Photos	PRODUCT DATA	FIO	mdl				A	11 May 11	F	12 May 11
	15	15	01380 1.2.1	Trench Path Pre-Construction Photos	PRODUCT DATA	FIO	mdl				A	19 May 11	F	26 May 11
	16	16	01380 1.2.1	May 2011 Progress Photos	PRODUCT DATA	FIO	mdl				A	14 Jun 11	F	16 Jun 11
	17	17	01380 1.2.1	June 2011 Progress Photos	PRODUCT DATA	FIO	mdl				A	18 Jul 11	F	25 Jul 11
	18	18	01380 1.2.1	July 2011 Progress Photos	PRODUCT DATA	FIO	mdl				A	19 Aug 11	F	01 Sep 11
	19	19	01380 1.2.1	Progress Photos - August 2011	PRODUCT DATA	FIO					A	02 Nov 11	F	15 Nov 11
	20	20	01380 1.2.1	September 2011 Progress Photos	PRODUCT DATA	FIO					A	08 Nov 11	F	15 Nov 11
	21	21	01380 1.2.1	Post Construction Photos	PRODUCT DATA	FIO					A	10 Jan 12	FX	10 Feb 12
SECTION - 01381			**Video Taping**											
	1.1	1	01381 1.3.1	Pre-Construction Video	PRODUCT DATA	FIO	mdl				A	27 May 11	F	13 Jun 11
	2	2	01381 1.3.1	Pre-Construction Video - EW-7	PRODUCT DATA	FIO	mdl				A	29 Aug 07	F	27 Sep 07
	3.1	3	01381 1.2.1	Post-Construction Video	PRODUCT DATA	FIO	SysAdmin				A	06 May 12	F	27 Jul 12
SECTION - 01450			**Chemical Data Quality Control**											
0001	1	1	01450 1.3.1	Sampling and Analysis Plan - DRAFT	PRECON SUBMTL	GA	mdl	22 Nov 10	22 Nov 10	22 Nov 10	A	20 Aug 07	G	02 Feb 11
0001	2	2	01450 1.3.1	Responses to Comments - DRAFT SAP	PRECON SUBMTL	GA	mdl	22 Nov 10	22 Nov 10	22 Nov 10	A	20 Aug 07	F	22 Feb 08
0001	3	3	01450 1.3.1	Response to Comments for RAWP,R0	PRECON SUBMTL	GA	mdl	22 Nov 10	22 Nov 10	22 Nov 10	A	20 Aug 07	B	03 Jun 07
	27	7	01450 1.3.3	QC Labs Certifications	CERTIFICATES	FIO	mdl				A	07 Jan 11	F	07 Feb 11
	28	8	01450 1.3.3	GW-1 Bacteria Results 11FEB2011	TEST REPORTS	FIO	mdl				A	20 Feb 11	F	24 Feb 11
A3180	35	10	01450 1.2.1	Well Development Sampling 3/14-4/4/11		FIO	mdl	05 Apr 11	05 Apr 11	05 Apr 11	A	19 May 11	F	23 May 11
A3180	36	11	01450 1.3.4	Topsoil Data Pkg	TEST REPORTS	FIO	mdl	05 Apr 11	05 Apr 11	05 Apr 11	A	22 Jul 11	F	15 Aug 11
	4	12	01450 1.3.4	Chemical Data Package - GW Data	TEST REPORTS	FIO	mdl				A	20 Aug 07	F	21 Aug 07
	5	13	01450 1.3.4	Chemical Data Package - SB waste	TEST REPORTS	FIO	mdl				A	13 Aug 07	F	13 Aug 07
	6	14	01450	Work Plan Addendum-Aquifer Testing	PRECON SUBMTL	GA					A	23 Aug 07	G	02 Feb 11
	7	15	01450	Chemical Data Package - GW Data	TEST REPORTS	FIO	mdl				A	23 Aug 07	F	23 Aug 07
	8	16	01450	GW Data Summary Report	TEST REPORTS	FIO	mdl				A	29 Aug 07	F	30 Aug 07
	10	17	01450	Field Sampling Plan Addendum #2	PRECON SUBMTL	GA					A	12 Oct 07	G	02 Feb 11
	11	18	01450	QAPP Addendum	PRECON SUBMTL	GA					A	29 Oct 07	F	29 Apr 08
A0780	12	19	01450	Spent Carbon TCLP Analytical Results	REPORTS	FIO	mdl				A	27 Feb 08	F	29 Feb 08
	13	20	01450	Spent Carbon Disposal Documents		FIO	mdl				A	04 Feb 08	F	04 Feb 08

RANGE : ALL

SORT : SECTION & ITEM

SUBMITTAL REGISTER (ER 415-1-10)

TITLE AND LOCATION Rockaway Wellfield Superfund Site, EM/WS,Rockaway Borough, East Main/Wall Street, Morris County, NJ

DATE 15 Aug 2012

CONTRACTOR CAPE Environmental Management Inc.

CONTRACT NUMBER W912DQ-05-D-0001 0005

ACTIVITY No.	TRANS-MITTAL No.	ITEM No.	SPEC PARAGRAPH No.	DESCRIPTION OF SUBMITTAL	TYPE OF SUBMITTAL	CLASSI-FICATION FIO GA, DA or CR	CONTRACTOR REVIEWER	CONTRACTOR SCHEDULE DATES SUBMIT NEEDED BY	APPROVAL NEEDED BY	MATERIAL NEEDED BY	CONTRACTOR ACTION CODE	CORPS RECEIVED DATE	GOVERNMENT ACTION CODE	CORPS RETURNED DATE
	14	21	01450	EW Sampling DSR-FEB2008	DATA	FIO	mdl				A	21 Feb 08	F	19 May 08
	15	22	01450	Field Sampling Plan Addendum #3	PRECON SUBMTL	GA	mdl				A	17 Mar 08	F	19 May 08
	16	23	01450	ANSETS-Chronic Tox-10/26/07	PRODUCT DATA	FIO	mdl				A	16 May 08	F	16 May 08
	18	25	01450	ANSETS-SB Waste-7/12/07	PRODUCT DATA	FIO	mdl				A	16 May 08	F	16 May 08
	19	26	01450	ANSETS-PumpTestH20-7/17/07	PRODUCT DATA	FIO	mdl				A	16 May 08	F	16 May 08
	20	27	01450	ANSETS-TrenchChara-9/26/07	PRODUCT DATA	FIO	mdl				A	16 May 08	F	16 May 08
	21	28	01450	ANSETS-PurgeH20-10/5/07	PRODUCT DATA	FIO	mdl				A	16 May 08	F	16 May 08
	22	29	01450	ANSETS-PurgeH20-10/30/07	PRODUCT DATA	FIO	mdl				A	16 May 08	F	16 May 08
	23	30	01450	ANSETS-TrenchSpoils-10/18/07	PRODUCT DATA	FIO	mdl				A	16 May 08	F	02 May 08
	24.1	31	01450 1.5	Soil Boring (CDM-2)- Chemical Lab Report	PRODUCT DATA	FIO	SysAdmin				A	17 Nov 10	B	22 Nov 10
	25	32	01450 1.5	ANSETS - CDM-2 Soil Boring	PRODUCT DATA	FIO					A	27 Sep 10	F	28 Sep 10
	26	33	01450 1.3.4	TrenchSpoils DER 24NOV2010	TEST REPORTS	FIO	mdl				A	24 Nov 10	F	16 Dec 10
A3180	37	34	01450 1.3.1	Baseline GW Report 2011	PRODUCT DATA	FIO	mdl	05 Apr 11	05 Apr 11	05 Apr 11	A	28 Jul 11	F	01 Sep 11
	31	35	01450 1.3.2	ANSETS TestAmerica 10-20-10	PRODUCT DATA	FIO	mdl				A	06 May 11	F	
	29	36	01450 1.3.3	GW-1 CDD Waste Characterization	TEST REPORTS	FIO	mdl				A	24 Feb 11	F	07 Mar 11
A3180	30	37	01450 1.3.2	Well Inventory for Baseline Event	PRODUCT DATA	GA	mdl	09 Mar 11	08 Apr 11	08 Apr 11	A	29 Mar 11	F	18 Apr 11
	32	38	01450 1.3.2	ANSETS TestAmerica 10-21-10	PRODUCT DATA	FIO	mdl				A	06 May 11	F	
	33	39	01450 1.3.2	ANSETS Katahdin 1-20-11	PRODUCT DATA	FIO	mdl				A	06 May 11	F	
	34	40	01450 1.3.2	ANSETS Katahdin 1-20-11	PRODUCT DATA	FIO	mdl				A	06 May 11	F	
	38	41	01450 1.3.4	Topsoil Data - Petruzelli	PRODUCT DATA	FIO	mdl				A	17 Oct 11	F	20 Oct 11
SECTION - 01451			**Contractor Quality Control**											
0001	1	1	01451	Delegation of Authority - CQCSM	QUALIFICATIONS	GA	mdl	22 Nov 10	22 Nov 10	22 Nov 10	A	20 Aug 07	G	02 Feb 11
0001	2	2	01451 1.3.2	CQC Organization Chart REV 0	PRODUCT DATA	GA	mdl	22 Nov 10	22 Nov 10	22 Nov 10	A	20 Aug 07	E	07 May 07
0001	3	3	01451 1.3.1	CQC Plan - DRAFT	PRECON SUBMTL	GA	mdl	22 Nov 10	22 Nov 10	22 Nov 10	A	20 Aug 07	E	07 May 07
0001	4	4	01451	DRAFT CQCP - Response to Comments	PRECON SUBMTL	GA	mdl	22 Nov 10	22 Nov 10	22 Nov 10	A	20 Aug 07	C	15 May 07
0001	5	5	01451 1.3.1	Contractor Quality Control Plan, Rev 1	PRECON SUBMTL	GA	mdl	22 Nov 10	22 Nov 10	22 Nov 10	A	11 May 07	D	23 May 07
	6	10	01451	CQCSM Delegation of Authority-070725	QUALIFICATIONS	GA	mdl				A	20 Aug 07	G	02 Feb 11
	7	11	01451	CQCSM Delegation of Authority-070807	QUALIFICATIONS	GA	mdl				A	13 Aug 07	B	13 Aug 07
	8	12	01451	CQC Plan, Revision 2	PRODUCT DATA	GA	mdl				A	05 Sep 07	A	05 Sep 07
	8.3	12.1	01451 1.3.1	CQC Plan, Revision 5	PRECON SUBMTL	GA	mdl				A	19 May 11	B	13 Jun 11
	9	13	01451	WORK PLAN - GTS Construction	PRECON SUBMTL	GA	mdl				A	29 Oct 07	E	15 Nov 07
	10	14	01451	CDM Groundwater Pumping Test Report	REPORTS	GA	mdl				A	04 Feb 08	E	19 May 08
	11	15	01451	Work Plan - GTS Constr. RTCs	PRECON SUBMTL	GA	mdl				A	17 Mar 08	G	02 Feb 11
	12	16	01451	CQCSM Delegation of Authority-20MAR08	QUALIFICATIONS	GA	mdl				A	19 Mar 08	F	19 May 08
	13	17	01451	Alt CQCSM Delegation of Authority10MAR08	QUALIFICATIONS	GA	mdl				A	19 Mar 08	F	19 May 08

RANGE : ALL

SORT : SECTION & ITEM

SUBMITTAL REGISTER (ER 415-1-10)

TITLE AND LOCATION Rockaway Wellfield Superfund Site, EM/WS,Rockaway Borough, East Main/Wall Street, Morris County, NJ

DATE 15 Aug 2012

CONTRACTOR CAPE Environmental Management Inc.

CONTRACT NUMBER W912DQ-05-D-0001 0005

ACTIVITY No.	TRANS-MITTAL No.	ITEM No.	SPEC PARAGRAPH No.	DESCRIPTION OF SUBMITTAL	TYPE OF SUBMITTAL	CLASSI-FICATION FIO GA, DA or CR	CONTRACTOR REVIEWER	CONTRACTOR SCHEDULE DATES SUBMIT NEEDED BY	APPROVAL NEEDED BY	MATERIAL NEEDED BY	CONTRACTOR ACTION CODE	CORPS RECEIVED DATE	GOVERNMENT ACTION CODE	CORPS RETURNED DATE
	14	18	01451	Work Plan GTS Construction REV 1	PRECON SUBMTL	GA	mdl				A	19 Mar 08	B	16 Aug 10
	14.2	18.1	01451 1.3.1	Work Plan GTS Construction REV 2	PRECON SUBMTL	GA	mdl				A	11 Apr 11	A	21 Apr 11
	15	19	01451	90% GTS Design - Process/Electrical	DESIGN DATA	GA	mdl				A	13 Jun 08	G	02 Feb 11
	16	20	01451 1.1	90% GWTS/Pump House Specs & Drawings	PRECON SUBMTL	FIO	mdl				A	16 Sep 10	C	15 Oct 10
	16.1	20.1	01451 1.1	100% GWTS / Pump House Specs and Drawi	PRECON SUBMTL	FIO	mdl				A	29 Nov 11	F	31 Jan 11
	17.1	21	01451	CQCSM DoA - Landle 17NOV2010	PRECON SUBMTL	GA	mdl				A	18 Apr 11	B	21 Apr 11
	18	22	01451	Alt CQCSM DoA - Morrison 17NOV2010	PRECON SUBMTL	GA	mdl				A	24 Nov 10	B	16 Dec 10
	18.2	22.1	01451 1.2.3	Alt CQCSM DoA - Morrison 17NOV2010	PRODUCT DATA	GA	mdl				A	29 Apr 11	B	29 Apr 11
	19	23	01451	100% GWTS/Pump House Design Package	PRECON SUBMTL	GA	mdl				A	07 Jan 11	F	19 Jan 11
	19	29	01451 1.2.3	CQCSM DoA - Altamirano	PRODUCT DATA	GA	mdl				A	07 Jan 11	B	19 Jan 11
	20	30	01451 1.2.3	2nd Alt CQCSM DoA - Caudill 20APR2011	PRODUCT DATA	GA	mdl				A	20 Apr 11	B	28 Apr 11
	21	31	01451 1.2.3	CDM Structural Inspection 5-10-11	PRODUCT DATA	FIO	mdl				A	19 May 11	F	03 Jun 11
	22	32	01451 1.2.1	QC Tech Credentials - Corinne Walker	PRODUCT DATA	GA	mdl				A	06 Jun 11	B	13 Jun 11
	23.1	33	01451 1.2.1	QC Tech Credentials - Reynante Clavel	PRODUCT DATA	GA	mdl				A	02 Sep 11	B	06 Sep 11
	24.1	34	01451 1.2.1	QC Tech Credentials - Meg Greenwald	PRODUCT DATA	GA	mdl				A	25 Oct 11	B	15 Nov 11
	25	35	01451 1.2.3	CQCSM DoA - Ferroni, Paul	PRODUCT DATA	GA	mdl				A	11 Aug 11	B	15 Aug 11
	26	36	01451 1.2.3	CQCSM DoA - Lynch, Eric	PRODUCT DATA	GA	mdl				A	02 Sep 11	B	02 Sep 11
	27	37	01451 1.2.3	Alt CQCSM DoA - Clavel, Rey	PRODUCT DATA	GA	mdl				A	02 Sep 11	E	06 Sep 11
	28	38	01451 1.2.3	Site Super DoA - McConnell, Frank	PRODUCT DATA	GA	mdl				A	15 Sep 11	B	20 Sep 11
SECTION - 01500			**Temporary Construction Facilities&Utilities**											
	3	3	01500	Site Layout (Laydown Area) REV 2	SHOP DRAWINGS	GA	mdl				A	06 Jun 07	B	12 Jun 07
	4	4	01500	Site Layout DWG - EW-5	SHOP DRAWINGS	FIO	mdl				A	29 Aug 07	F	27 Aug 07
	4	6	01500	Site Layout DWG - EW-6	SHOP DRAWINGS	FIO	mdl				A	29 Aug 07	F	27 Aug 07
	4	7	01500	Site Layout DWG - EW-7	SHOP DRAWINGS	FIO	mdl				A	29 Aug 07	F	27 Aug 07
	5	8	01500	EW-7A Location	PRODUCT DATA	FIO	mdl				A	27 Sep 07	G	02 Feb 11
SECTION - 01510			**Temporary Site Utilities**											
	1	1	01510 1.2.1	Site Layout	SHOP DRAWINGS	GA	mdl				A	16 Nov 11	B	21 Nov 11
SECTION - 01550			**Surveying**											
A2800	3	1	01550 1.4 A3	5-day Surveying Notification	PRECON SUBMTL	FIO	SysAdmin	17 Dec 10	17 Dec 10	17 Dec 10	A	02 Nov 11	F	03 Nov 11
A2800	4	2	01550 §01550, 1.2	Surveyor Qualifications	PRECON SUBMTL	FIO	SysAdmin	17 Dec 10	17 Dec 10	17 Dec 10	A	02 Nov 11	F	03 Nov 11
A2870	5	3	01550 1.2.2	Survey Accuracy Documentation	PRECON SUBMTL	FIO	SysAdmin	22 Oct 10	22 Oct 10	22 Oct 10	A	02 Nov 11	F	03 Nov 11
A2870	8	4	01550 1.2.3	Surveyor Field Notes		FIO	SysAdmin	22 Oct 10	22 Oct 10	22 Oct 10	A	16 Nov 11	F	21 Nov 11
	2	5	01550	GTS Building Site Survey	SHOP DRAWINGS	FIO	mdl				A	19 Sep 07	F	19 Sep 07
	6	6	01550 1.2.1	Surveyor Qualifications	PRODUCT DATA	FIO	SysAdmin				A	02 Nov 11	F	03 Nov 11
	7	7	01550 1.2.2	Survey Accuracy Documentation	PRODUCT DATA	FIO	SysAdmin				A	02 Nov 11	F	03 Nov 11

RANGE : ALL

SORT : SECTION & ITEM

SUBMITTAL REGISTER (ER 415-1-10)

TITLE AND LOCATION: Rockaway Wellfield Superfund Site, EM/WS,Rockaway Borough, East Main/Wall Street, Morris County, NJ

DATE: 15 Aug 2012

CONTRACTOR: CAPE Environmental Management Inc.

CONTRACT NUMBER: W912DQ-05-D-0001 0005

ACTIVITY No.	TRANS-MITTAL No.	ITEM No.	SPEC PARAGRAPH No.	DESCRIPTION OF SUBMITTAL	TYPE OF SUBMITTAL	CLASSI-FICATION FIO GA, DA or CR	CONTRACTOR REVIEWER	CONTRACTOR SCHEDULE DATES: SUBMIT NEEDED BY	APPROVAL NEEDED BY	MATERIAL NEEDED BY	CONTRACTOR ACTION: CODE	CORPS RECEIVED DATE	GOVERNMENT ACTION: CODE	CORPS RETURNED DATE
	9.1	8	01550 1.2.3	Surveyor Field Notes	PRODUCT DATA	FIO	SysAdmin				A			
A2310		10	01550 1.2.5	As-Built Drawings	CLOSEOUT SUBMTL	GA		09 Aug 11	09 Aug 11	09 Aug 11				
SECTION - 01580			**Signs**											
A2810	1	1	01580 1.2.1	Project Signs	PRODUCT DATA	GA	mdl	15 Jul 11	15 Jul 11	15 Jul 11	A	06 Nov 11	B	21 Nov 11
SECTION - 01730			**Operation and Maintenance Support Information**											
A2300	2.1	2	01730 1.03	O&M Manual	PRODUCT DATA	FIO	SysAdmin	09 Aug 11	09 Aug 11	09 Aug 11	A	06 Feb 12	F	05 Apr 12
	1	3	01730 1.2	GTS Startup Plan	PRODUCT DATA	FIO	mdl				A	15 Aug 11	F	01 Sep 11
	1.1	3.1	01730 1.2	GTS Startup Plan, Rev 1	PRODUCT DATA	FIO	mdl				A	15 Sep 11	B	20 Sep 11
	3	4	01730	ITP Report	TEST REPORTS	FIO	SysAdmin				A	05 Apr 12	FX	05 Apr 12
	4	5	01730	ITP Report - Revision 001	TEST REPORTS	FIO	SysAdmin				A			
SECTION - 01735			**Project Closeout**											
A2300	1	2	01735 1.2.4	As-Built Drawings - DRAFT	AS-BUILTS	GA	SysAdmin	09 Aug 11	09 Aug 11	09 Aug 11	A	08 Feb 12	C	08 Mar 12
A2300	2.1	3	01735 3.2.4	Interim Remedial Action Report - Rev. 1	REPORTS	GA	SysAdmin	10 Jul 11	09 Aug 11	09 Aug 11	A	05 Mar 12		05 Apr 12
	3	4	01735 1.2.4	Final As-Built Drawings	AS-BUILTS	GA	SysAdmin				A			
SECTION - 01740			**Warranties and Bonds**											
	1	1	01740 1.03	Warranty Package	WARRANTIES	FIO	SysAdmin				A	18 Jun 12	F	27 Jul 12
SECTION - 02100			**Site Preparation**											
A0940	1	1	02100 1.2.1	Road Opening Permit	CERTIFICATES	FIO	mdl				A	16 Aug 07	F	21 Aug 07
	2.1	2	02100 1.2.1	Road Opening Permit	CERTIFICATES	FIO	SysAdmin				A	24 Apr 12	F	24 May 12
SECTION - 02120			**Transportation & Disposal**											
	7	1	02120 1.3.3	MCR for Pure Soil Technologies	PRODUCT DATA	FIO	mdl				A	28 Feb 11	F	28 Feb 11
A2450	3.1	2	02120 1.3.1	Transportation Plan	PRECON SUBMTL	GA	mdl	08 Jul 11	08 Jul 11	08 Jul 11	A	16 Nov 11	B	21 Nov 11
	8	3	02120 1.3.2	Abatetech ACM Final Report	PRODUCT DATA	FIO	mdl				A	18 Apr 11	A	18 Apr 11
A2960	6	4	02120 1.3.3	Pilot Boring Soil Disposal-BillofLading	PRODUCT DATA	FIO	mdl	23 Oct 10	23 Oct 10	23 Oct 10	A	20 Feb 11	F	22 Feb 11
A0940	1	5	02120 1.4.1	Off-site Rule - Allstate Power Vac	PRODUCT DATA	FIO	mdl				A	23 Aug 07	F	23 Aug 07
	1	6	02120 1.4.1	Off-site Rule - Siemens Carbon	PRODUCT DATA	FIO	mdl				A	23 Aug 07	F	23 Aug 07
	1	7	02120 1.4.1	Off-site Rule - Tullytown	PRODUCT DATA	FIO	mdl				A	23 Aug 07	F	23 Aug 07
	1	8	02120 1.4.1	Off-site Rule - Envirotrol, Inc	PRODUCT DATA	FIO	mdl				A	23 Aug 07	F	23 Aug 07
	1	9	02120 1.4.1	Off-site Rule - GROWS Landfille	PRODUCT DATA	FIO	mdl				A	23 Aug 07	F	23 Aug 07
	2	10	02120	Non Hazardous Waste Manifest Tickets	CERTIFICATES	FIO	mdl				A	27 Feb 08	F	29 Feb 08
	4.1	11	02120	Waste Management Plan	PRECON SUBMTL	GA	mdl				A	16 Nov 11	B	21 Nov 11
	5	12	02120 1.4.1	Cycle Chem Off Site Rule	PRODUCT DATA	FIO					A	27 Sep 10	F	28 Sep 10
A2310	9	13	02120 1.3.2	Cycle Chem OSR Carbon Disposal	PRODUCT DATA	FIO	mdl	10 Jul 11	09 Aug 11	09 Aug 11	A	07 Apr 11	F	08 Apr 11
A2310	10	14	02120 1.3.2	GROWS Landfill OSR (Carbon)	PRODUCT DATA	FIO	mdl	10 Jul 11	09 Aug 11	09 Aug 11	A	07 Apr 11	F	18 Apr 11
A2310		15	02120 1.3.4	Annual and Biennial Reports	TEST REPORTS	FIO		10 Jul 11	09 Aug 11	09 Aug 11				

RANGE : ALL

SORT : SECTION & ITEM

SUBMITTAL REGISTER (ER 415-1-10)

TITLE AND LOCATION: Rockaway Wellfield Superfund Site, EM/WS,Rockaway Borough, East Main/Wall Street, Morris County, NJ

DATE: 15 Aug 2012

CONTRACTOR: CAPE Environmental Management Inc.

CONTRACT NUMBER: W912DQ-05-D-0001 0005

ACTIVITY No.	TRANS-MITTAL No.	ITEM No.	SPEC PARAGRAPH No.	DESCRIPTION OF SUBMITTAL	TYPE OF SUBMITTAL	CLASSI-FICATION FIO GA, DA or CR	CONTRACTOR REVIEWER	CONTRACTOR SCHEDULE DATES SUBMIT NEEDED BY	APPROVAL NEEDED BY	MATERIAL NEEDED BY	CONTRACTOR ACTION CODE	CORPS RECEIVED DATE	GOVERNMENT ACTION CODE	CORPS RETURNED DATE
A2310	11	16	02120 1.3.5	Exception Reports	TEST REPORTS	FIO	SysAdmin	10 Jul 11	09 Aug 11	09 Aug 11	A	16 Nov 11	F	21 Nov 11
A2310	12	17	02120 1.3.6	Shipping Documents and Packaging Certifi	CERTIFICATES	FIO	SysAdmin	10 Jul 11	09 Aug 11	09 Aug 11	A			
A2310	13	18	02120 1.3.7	Certificates of Disposal	CERTIFICATES	FIO	SysAdmin	10 Jul 11	09 Aug 11	09 Aug 11	A			
A2310	14	19	02120 1.3.8	Disposal Facility Names and Permits	PRECON SUBMTL	FIO	SysAdmin	10 Jul 11	09 Aug 11	09 Aug 11	A			
SECTION - 02210			**Excavation, Trenching, Backfilling, Compactio**											
A2020	3	1	02210 1.3.3	Clean Fill Certfications	CERTIFICATES	FIO	mdl	03 Dec 10	03 Dec 10	03 Dec 10	A	15 Nov 07	G	02 Feb 11
	1	7	02210	90% Design Package - Trenching	DESIGN DATA	FIO	mdl				A	27 Sep 07	D	03 Oct 07
	2	8	02210	GTS Geotechnical Memo	PRODUCT DATA	FIO	mdl				A	27 Sep 07	G	02 Feb 11
A3450	4	9	02210	Waiver - Working near Power Lines	PRODUCT DATA	FIO	mdl	14 Jan 11	14 Jan 11	14 Jan 11	A	15 Nov 07	G	16 Aug 10
	5	10	02210	Town Engineer Comments on Trench PKG	PRODUCT DATA	FIO	mdl				A	12 Dec 07	FX	07 Jan 08
	6	11	02210	100% Trench Design	PRECON SUBMTL	GA	mdl				A	17 Mar 08	F	19 May 08
	10.1	11.1	02210 1.1	REV 1 Trench Design	PRECON SUBMTL	FIO	mdl				A	07 Dec 10	F	19 Jan 11
	7	12	02210	Road Opening Permit - Trenching	PRODUCT DATA	FIO					A	10 Apr 08	G	02 Feb 11
	8	13	02210 1.5	Geotechnical Memorandum	DESIGN DATA	FIO					A	27 Sep 10	F	15 Oct 10
	9	14	02210 1.1	Road Opening Permit Application (03NOV10	RECORDS	FIO					A	10 Nov 10	F	15 Nov 10
SECTION - 02272			**Geotextile**											
A2130		1	02272 Detail C	Geotextile Fabric - list of material pr	PRODUCT DATA	DA		08 Apr 11	08 Apr 11	08 Apr 11				
SECTION - 02300			**Earthwork**											
	2.1	2	02300 1.02.A	Structural and Common Fill Tech Memo	PRODUCT DATA	FIO	mdl				A	19 Jan 11	F	24 Jan 11
	2.2	3	02300 1.02.B	Structural & Common Fill Sample Results	TEST REPORTS	FIO	mdl				A	17 Mar 11	F	
	1.1	4	02300 1.02.C	DGA and 3/4 inch stone	CERTIFICATES	FIO	mdl				A	28 Mar 11	F	18 Apr 11
A2410	5	5	02300 1.02.D	2011 Utility Clearance - Trenching	PRECON SUBMTL	FIO	mdl	28 Mar 11	28 Mar 11	28 Mar 11	A	31 Mar 11	F	01 Apr 11
	7	5.1	02300 1.1	2011 Utility Clearance-Trenching 7-28-11	PRODUCT DATA	FIO	mdl				A	06 Jun 11	F	13 Jun 11
	9	5.2	02300 1.1	2011 Utility Clearance-Trenching 9-28-11	PRODUCT DATA	FIO	mdl				A	08 Aug 11	F	08 Aug 11
	3	10	02300 1.02A	Washed Sand Tech Memo	PRODUCT DATA	FIO	mdl				A	22 Feb 11	F	28 Feb 11
	4	11	02300 1.3A, 2.6	Geotextile - Carthage Mills FX100HS	PRODUCT DATA	FIO	mdl				A	22 Mar 11	F	01 Apr 11
	6	12	02300 1.02.D	Miss Mark Tickets 2011	PRODUCT DATA	FIO	mdl				A	03 May 11	F	05 May 11
	8	12.1	02300 1.02.D	Miss Mark Utility Locates 13JUN2011	PRODUCT DATA	FIO	mdl				A	17 Jun 11	F	17 Jun 11
SECTION - 02316			**Excavation, Trenching & Backfill-Utility**											
	1	1	02316 1.4 B	Materials Source Tech Memo-19MAY2008	CERTIFICATES	GA	mdl				A	13 Jun 08	G	02 Feb 11
SECTION - 02370														
A2170		1	02370 1.3.1	Soil Erosion and Sediment Control Plan		GA		18 Nov 10	18 Nov 10	18 Nov 10				
SECTION - 02550			**Asphaltic Paving**											
A2120	1	1	02550 1.03.A	Ashpalt Mix Design - Paverite	DESIGN DATA	FIO	mdl	14 Apr 11	14 Apr 11	14 Apr 11	A	22 Mar 11	F	01 Apr 11
	2	2	02550 1.03.A	Hot Applied Sealant for Cracks	PRODUCT DATA	FIO	mdl				A	21 Jun 11	F	27 Jun 11

RANGE : ALL

SORT : SECTION & ITEM

SUBMITTAL REGISTER (ER 415-1-10)

TITLE AND LOCATION: Rockaway Wellfield Superfund Site, EM/WS,Rockaway Borough, East Main/Wall Street, Morris County, NJ

DATE: 15 Aug 2012

CONTRACTOR: CAPE Environmental Management Inc.

CONTRACT NUMBER: W912DQ-05-D-0001 0005

ACTIVITY No.	TRANS-MITTAL No.	ITEM No.	SPEC PARAGRAPH No.	DESCRIPTION OF SUBMITTAL	TYPE OF SUBMITTAL	CLASSI-FICATION FIO GA, DA or CR	CONTRACTOR REVIEWER	CONTRACTOR SCHEDULE DATES: SUBMIT NEEDED BY	APPROVAL NEEDED BY	MATERIAL NEEDED BY	CONTRACTOR ACTION: CODE	CORPS RECEIVED DATE	GOVERNMENT ACTION: CODE	CORPS RETURNED DATE
SECTION - 02605			**Precast Concrete Structures**											
	2.1	1	02605 1.3.1	EW Vault Shop Drawings	SHOP DRAWINGS	GA	mdl				A	11 Nov 11	FX	16 Nov 11
	3	5	02605	EW Vault Shop Drawings	SHOP DRAWINGS	GA	mdl				A	05 Sep 07	F	05 Sep 07
SECTION - 02616			**Ductile Iron Pipe and Fittings**											
	1	1	02616 1.02.A	Shop Drawings	SHOP DRAWINGS	FIO	mdl				A	01 Feb 11	F	04 Feb 11
	1	2	02616 1.02.A	Product Data	PRODUCT DATA	FIO	mdl				A	01 Feb 11	F	04 Feb 11
SECTION - 02622			**Plastic Pipe**											
	1	1	02622 1.02.A	Manufacturer and Material List	PRODUCT DATA	FIO	mdl				A	07 Jan 11	F	11 Jan 11
	1	2	02622 1.02.B	Pipe Layout and Schedule Shop Drawings	SHOP DRAWINGS	FIO	mdl				A	07 Jan 11	F	11 Jan 11
	1	3	02622 1.02.C	Certified ASTM Test Reports	TEST REPORTS	FIO	mdl				A	07 Jan 11	F	11 Jan 11
A1700	3	4	02622 1.02.D	Certification for HDPE butt-fusion perso	CERTIFICATES	FIO	mdl	30 Jun 11	30 Jun 11	30 Jun 11	A	20 Feb 11	F	22 Feb 11
A2670	2	6	02622 1.03B	PVC Drain Shop Drawings	SHOP DRAWINGS	FIO	mdl	12 Feb 11	14 Mar 11	14 Mar 11	A	14 Feb 11	F	16 Feb 11
A2670	2	7	02622 1.03A	Floor Drain/Connection Info	PRODUCT DATA	FIO	mdl	12 Feb 11	14 Mar 11	14 Mar 11	A	14 Feb 11	F	16 Feb 11
	5	8	02622 1.03A	Forcemain Cleanouts	SHOP DRAWINGS	FIO	mdl				A	23 May 11	F	26 May 11
	5	9	02622 1.03A	Elbows - Dual Containment	SHOP DRAWINGS	FIO	mdl				A	23 May 11	F	26 May 11
	5	10	02622 1.03A	Forcemain Wyes	SHOP DRAWINGS	FIO	mdl				A	23 May 11	F	26 May 11
	6	11	02622 1.02.B	Vault Piping Drawings	SHOP DRAWINGS	FIO	mdl				A	20 Jul 11	F	25 Jul 11
	5	12	02622 1.03	Fabricated Fitting Pressure Verification	DESIGN DATA	FIO	mdl				A	23 May 11	F	26 May 11
	4	13	02622 1.02.D	HDPE fusion certificates	CERTIFICATES	FIO	mdl				A	11 May 11	F	12 May 11
SECTION - 02640			**Buried Valves**											
A1690	1	5	02640 Detail R	Water Main Connection - curb valve, valv	SHOP DRAWINGS	FIO	mdl	28 Jun 11	28 Jun 11	28 Jun 11	A	14 Feb 11	F	22 Feb 11
A1690	1	6	02640 Detail R	Water Main Connection - curb valve, valv	PRODUCT DATA	FIO	mdl	28 Jun 11	28 Jun 11	28 Jun 11	A	14 Feb 11	F	22 Feb 11
SECTION - 02670			**Groundwater Extraction and Monitoring Wells**											
	1	1	02670 1.3.15	Monitoring Well Permits - EW-5, 6, & 7	CERTIFICATES	FIO	mdl				A	20 Aug 07	G	02 Feb 11
	1	2	02670 1.3.15	Driller's License (B&B Drilling)	CERTIFICATES	FIO	mdl				A	20 Aug 07	G	02 Feb 11
	1	3	02670 1.3.13	Qualifications - Geologists	CERTIFICATES	FIO	mdl				A	20 Aug 07	G	02 Feb 11
0001	2	4	02670 1.3.15	EW Installation - Once Call Tickets	CERTIFICATES	FIO	mdl	22 Nov 10	22 Nov 10	22 Nov 10	A	15 May 07	F	16 May 07
0001	3	5	02670 1.3.15	Short Term Water Use PermitbyRule, Rev 0	CERTIFICATES	FIO	mdl	22 Nov 10	22 Nov 10	22 Nov 10	A	11 Jun 07	F	20 Jun 07
0001	4	6	02670 1.3.15	EW-6 Road Opening Permit	CERTIFICATES	FIO	mdl	22 Nov 10	22 Nov 10	22 Nov 10	A	20 Aug 07	F	09 Jul 07
0001	5	7	02670 1.3.9	Grain Size Analysis - EW-6	TEST REPORTS	FIO	mdl	22 Nov 10	22 Nov 10	22 Nov 10	A	20 Aug 07	G	02 Feb 11
	6	8	02670 1.3.2	EW-7 Boring Log	PRODUCT DATA	GA	mdl				A	26 Jul 07	FX	26 Jul 07
	7	9	02670 1.3.8	EW-7 Catalog Data (Well Gravel)	PRODUCT DATA	FIO	mdl				A	27 Jul 07	FX	27 Jul 07
	7	10	02670 1.3.9	EW-7 Grain Size Analysis	TEST REPORTS	FIO	mdl				A	27 Jul 07	FX	27 Jul 07
	8	11	02670 1.3.2	EW-6 Boring Log	PRODUCT DATA	GA	mdl				A	02 Jul 07	FX	26 Jul 07
	9	12	02670 1.3.8	EW-6 Catalog Data (Well Gravel)	PRODUCT DATA	FIO	mdl				A	02 Jul 07	FX	26 Jul 07

RANGE : ALL

SORT : SECTION & ITEM

SUBMITTAL REGISTER (ER 415-1-10)

TITLE AND LOCATION: Rockaway Wellfield Superfund Site, EM/WS,Rockaway Borough, East Main/Wall Street, Morris County, NJ

DATE: 15 Aug 2012

CONTRACTOR: CAPE Environmental Management Inc.

CONTRACT NUMBER: W912DQ-05-D-0001 0005

ACTIVITY No.	TRANS-MITTAL No.	ITEM No.	SPEC PARAGRAPH No.	DESCRIPTION OF SUBMITTAL	TYPE OF SUBMITTAL	CLASSI-FICATION FIO GA, DA or CR	CONTRACTOR REVIEWER	CONTRACTOR SCHEDULE DATES: SUBMIT NEEDED BY	APPROVAL NEEDED BY	MATERIAL NEEDED BY	CONTRACTOR ACTION: CODE	CORPS RECEIVED DATE	GOVERNMENT ACTION: CODE	CORPS RETURNED DATE
	9	13	02670 1.3.9	EW-6 Grain Size Analysis	TEST REPORTS	FIO	mdl				A	02 Jul 07	FX	26 Jul 07
	8	14	02670 1.3.2	EW-5 Boring Log	PRODUCT DATA	GA	mdl				A	02 Jul 07	FX	26 Jul 07
	9	16	02670 1.3.9	EW-5 Grain Size Analysis	TEST REPORTS	FIO	mdl				A	02 Jul 07	FX	26 Jul 07
	10	17	02670 1.3.15	EW Installation - One Call Tickets-R1	CERTIFICATES	FIO	mdl				A	20 Jul 07	F	20 Jul 07
	11	18	02670	Wellscreen Design for EW-7	DESIGN DATA	GA	mdl				A	20 Aug 07	B	20 Aug 07
	12	19	02670	Wellscreen Design for EW-6	DESIGN DATA	GA	mdl				A	06 Aug 07	B	13 Aug 07
	13	20	02670	Wellscreen Design for EW-5	DESIGN DATA	GA	mdl				A	20 Aug 07	B	20 Aug 07
	14	21	02670	Pump Test Operator License	CERTIFICATES	FIO	mdl				A	20 Aug 07	F	21 Aug 07
	15	22	02670 1.1	Qtr Monitoring Report 07/01/10-09/30/10	RECORDS	FIO					A	15 Oct 10	F	15 Oct 10
A2140	23	23	02670 1.3	Extraction Well Pumps	PRODUCT DATA	FIO	mdl	28 Jun 11	28 Jun 11	28 Jun 11	A	19 Aug 11	F	01 Sep 11
A2030	16.2	24	02670 1.3	Extraction Well Designs 2011	PRODUCT DATA	FIO	mdl	15 Jan 11	14 Feb 11	14 Feb 11	A	15 Feb 11	F	16 Feb 11
	17	25	02670 RFP 9.0A	Extraction Well Materials	PRODUCT DATA	FIO	mdl				A	07 Mar 11	F	18 Apr 11
	17	27	02670 RFP 9.0A	Utility Notifications EW Install 2011	PRODUCT DATA	FIO	mdl				A	07 Mar 11	F	18 Apr 11
	18	28	02670 1.3	Extraction Well Permits 2011	PRECON SUBMTL	FIO	mdl				A	07 Mar 11	F	08 Mar 11
	19	29	02670 1.3	Pump/Pipe Resize Memo	PRODUCT DATA	FIO	mdl				A	10 Mar 11	F	24 Mar 11
	19.1	29.1	02670 1.3	Pump/Pipe Resize Memo Rev 1	DESIGN DATA	FIO	mdl				A	19 May 11	F	03 Jun 11
	20	30	02670 1.3	Pitless Adapters	PRODUCT DATA	FIO	mdl				A	23 Mar 11	F	01 Apr 11
	21	31	02670 1.2.3	Completed Extraction Well Permits	PRODUCT DATA	FIO	mdl				A	29 Apr 11	F	27 Jun 11
	22	32	02670 1.1	Qtr Monitoring Report 01/01/11-03/31/11	RECORDS	FIO	mdl				A	29 Apr 11	F	29 Apr 11
SECTION - 02676			**Extraction Well Head Detail**											
		1	02676 Detail C	Shop Drawing for Wellhead Modification a	SHOP DRAWINGS	DA								
SECTION - 02821			**Metal Fence and Gates**											
A2450	1	1	02821 1.03.A	Fencing Product Data	PRODUCT DATA	FIO	mdl	08 Jul 11	08 Jul 11	08 Jul 11	A	27 Jun 11	F	30 Jun 11
SECTION - 02921			**Seeding**											
A2450	1	1	02921 1.3.1	Seeding Schedule	PRODUCT DATA	FIO	SysAdmin	08 Jun 11	08 Jul 11	08 Jul 11	A	19 Oct 11	F	20 Oct 11
SECTION - 02950			**Loaming and Hydroseeding**											
A2450	1	1	02950 1.04.A	Samples - Material & Equipment	SAMPLES	FIO	mdl	08 Jul 11	08 Jul 11	08 Jul 11	A	15 Sep 11	F	20 Sep 11
A2450	1	4	02950 1.04.B	Seed/Fertilizer Product Data	PRODUCT DATA	FIO	mdl	08 Jul 11	08 Jul 11	08 Jul 11	A	15 Sep 11	F	20 Sep 11
A2450	1	5	02950 1.04.D	Qualifications of Installer	PRECON SUBMTL	FIO	mdl	08 Jul 11	08 Jul 11	08 Jul 11	A	15 Sep 11	F	20 Sep 11
A2450	1	6	02950 2.01 F	Seed Mix Certificate of Compliance	CERTIFICATES	FIO	mdl	08 Jul 11	08 Jul 11	08 Jul 11	A	15 Sep 11	F	20 Sep 11
A2450	2	7	02950 3.02.F	Fertilizing and Seeding Schedules	PRECON SUBMTL	FIO	SysAdmin	08 Jul 11	08 Jul 11	08 Jul 11	A	10 Jan 12	F	08 Feb 12
SECTION - 03100			**Structural Concrete Formwork**											
A2620	1	1	03100 1.3.1	Shop Drawings Formwork	SHOP DRAWINGS	FIO	mdl	23 Jan 11	22 Feb 11	22 Feb 11	A	14 Feb 11	F	28 Feb 11
A2620	1	2	03100 1.3.2	Form Design	PRODUCT DATA	FIO	mdl	23 Jan 11	22 Feb 11	22 Feb 11	A	14 Feb 11	F	28 Feb 11
	2	3	03100 1.3.3	Form Releasing Materials	PRODUCT DATA	FIO	mdl				A	23 Feb 11	F	28 Feb 11

RANGE : ALL

SORT : SECTION & ITEM

SUBMITTAL REGISTER (ER 415-1-10)

TITLE AND LOCATION: Rockaway Wellfield Superfund Site, EM/WS,Rockaway Borough, East Main/Wall Street, Morris County, NJ

DATE: 15 Aug 2012

CONTRACTOR: CAPE Environmental Management Inc.

CONTRACT NUMBER: W912DQ-05-D-0001 0005

ACTIVITY No.	TRANS-MITTAL No.	ITEM No.	SPEC PARAGRAPH No.	DESCRIPTION OF SUBMITTAL	TYPE OF SUBMITTAL	CLASSI-FICATION FIO GA, DA or CR	CONTRACTOR REVIEWER	CONTRACTOR SCHEDULE DATES: SUBMIT NEEDED BY	APPROVAL NEEDED BY	MATERIAL NEEDED BY	CONTRACTOR ACTION: CODE	CORPS RECEIVED DATE	GOVERNMENT ACTION: CODE	CORPS RETURNED DATE
	3	6	03100 1.3.2	Drawings - Stem Wall and Slab	SHOP DRAWINGS	FIO	mdl				A	08 Mar 11	F	12 Mar 11
	3	7	03100 1.3.2	Form Design - Stem Wall and Slab	PRODUCT DATA	FIO	mdl				A	08 Mar 11	F	12 Mar 11
A2780	4	8	03100 1.3.2	Drawings-Tie Beam, Pads and Steps	SHOP DRAWINGS	FIO	mdl	26 Mar 11	25 Apr 11	25 Apr 11	A	29 Mar 11	F	
A2780	4	9	03100 1.3.2	Form Design-Tie Beam, Pads and Steps	PRODUCT DATA	FIO	mdl	26 Mar 11	25 Apr 11	25 Apr 11	A	29 Mar 11	F	
SECTION - 03150			**Expansion/Contr & Const Joints, Concrete**											
	1	1	03150 1.3.1	Product Data	PRODUCT DATA	FIO	mdl				A	23 Feb 11	F	28 Feb 11
SECTION - 03301			**Concrete Reinforcing Steel**											
	3.1	1	03301 1.03.A	Shop Drawings	SHOP DRAWINGS	FIO	mdl				A	04 Mar 11	F	17 Mar 11
	2.1	2	03301 1.03.A	Water Reducing Admixture - Alimi	PRODUCT DATA	FIO	mdl				A	22 Jul 11	F	29 Jul 11
A2640	1.1	3	03301 1.03.B	Concrete Mix Design - Allied Concrete	TEST REPORTS	FIO	mdl	04 Mar 11	04 Mar 11	04 Mar 11	A	11 Mar 11	F	17 Mar 11
R1000	4	4	03301 1.03.B	Mix Design Toping Concrete - Alimi	DESIGN DATA	FIO	mdl	31 May 11	31 May 11	31 May 11	A	17 Jan 11	F	19 Jan 11
A2640	5	5	03301 1.03A.3	Pozzolith 220N Water Reducing Admixture	PRODUCT DATA	FIO	mdl	02 Feb 11	04 Mar 11	04 Mar 11	A	17 Jan 11	F	19 Jan 11
A2640	6	6	03301 1.03A.3	MSDSs for curing agents/admixtures	PRODUCT DATA	FIO	mdl	02 Feb 11	04 Mar 11	04 Mar 11	A	19 Jan 11	F	24 Jan 11
A2640	7	7	03301 1.03B	Conc Mix Design Aggregate - Alimi	TEST REPORTS	FIO	mdl	02 Feb 11	04 Mar 11	04 Mar 11	A	25 Jan 11	F	04 Feb 11
A2640	8	8	03301 1.03B	Concrete Mix Design - Alimi	TEST REPORTS	FIO	mdl	02 Feb 11	04 Mar 11	04 Mar 11	A	25 Jan 11	A	04 Feb 11
	9	9	03301 1.03A.2	Polycast Trench Drain & Accessories	PRODUCT DATA	FIO	mdl				A	14 Feb 11	F	16 Feb 11
SECTION - 03410			**Precast Concrete Structures**											
	1	1	03410 1.04.C, D	Vaults & Handholes Shop Drawings	SHOP DRAWINGS	FIO	mdl				A	23 Mar 11	F	01 Apr 11
	1	2	03410 1.04.D	Vaults & Handholes Materials	PRODUCT DATA	FIO	mdl				A	23 Mar 11	F	01 Apr 11
	1	3	03410 1.04.D	Vaults & Handholes MOC Details	PRODUCT DATA	FIO	mdl				A	23 Mar 11	F	01 Apr 11
	1	4	03410 1.04.D	Vaults & Handholes Design/Calculations	DESIGN DATA	FIO	mdl				A	23 Mar 11	F	01 Apr 11
	1	5	03410 1.04.D	Vaults & Handholes Concrete Mix Design	DESIGN DATA	FIO	mdl				A	23 Mar 11	F	01 Apr 11
A2310	3.1	7	03410 1.04.D, G	Test Reports for EW-5A, 8 and 9 Vaults	TEST REPORTS	FIO	mdl	09 Aug 11	09 Aug 11	09 Aug 11	A	13 Jul 11	F	14 Jul 11
A2310	4.1	8	03410 1.04.E	Test Reports for EW-6 and EW-10 Vaults	TEST REPORTS	FIO	mdl	09 Aug 11	09 Aug 11	09 Aug 11	A	13 Jul 11	F	14 Jul 11
R1000	6	11	03410 1.04D	Hollowcore Roof Plank Design	DESIGN DATA	FIO	mdl	01 May 11	31 May 11	31 May 11	A	05 Apr 11	F	07 Apr 11
A1640	2	12	03410 1.04C/D	Catch Basin and Cleanout Manhole Design	SHOP DRAWINGS	FIO	mdl	29 May 11	28 Jun 11	28 Jun 11	A	28 Mar 11	F	18 Apr 11
A1640	2	13	03410 1.04D	Ladder Rung Product Data	PRODUCT DATA	FIO	mdl	29 May 11	28 Jun 11	28 Jun 11	A	28 Mar 11	F	18 Apr 11
A1640	2	14	03410 1.04D	Convex Catch Basin Cover	PRODUCT DATA	FIO	mdl	29 May 11	28 Jun 11	28 Jun 11	A	28 Mar 11	F	18 Apr 11
A3800	7	15	03410 1.04C/D	EW-6 Manhole	DESIGN DATA	FIO	mdl	23 Mar 11	22 Apr 11	22 Apr 11	A	11 Apr 11	F	18 Apr 11
A2120	5	16	03410 1.04C/D	Forcemain Cleanouts Manholes	DESIGN DATA	FIO	mdl	15 Mar 11	14 Apr 11	14 Apr 11	A	05 Apr 11	F	
A2120	10	17	03410 1.04C/D	Covers for Cleanouts and Pitless Adapter	SHOP DRAWINGS	FIO	mdl	15 Mar 11	14 Apr 11	14 Apr 11	A	28 Jul 11	F	29 Jul 11
	8	18	03410 1.04.E	Precast Breaks - GTS Cleanout Manhole	TEST REPORTS	FIO	mdl				A	01 Jul 11	F	01 Jul 11
	9	19	03410 1.04.E	Precast Breaks - Electric Handholes	TEST REPORTS	FIO	mdl				A	01 Jul 11	F	01 Jul 11
	11	20	03410 1.04E	Test Reports for Cleanout Grade Ring	TEST REPORTS	FIO	mdl				A	08 Aug 11	F	12 Aug 11
SECTION - 03511			**Sidewalks and Curbs**											

RANGE : ALL

SORT : SECTION & ITEM

SUBMITTAL REGISTER (ER 415-1-10)

TITLE AND LOCATION: Rockaway Wellfield Superfund Site, EM/WS,Rockaway Borough, East Main/Wall Street, Morris County, NJ

DATE: 15 Aug 2012

CONTRACTOR: CAPE Environmental Management Inc.

CONTRACT NUMBER: W912DQ-05-D-0001 0005

ACTIVITY No.	TRANS-MITTAL No.	ITEM No.	SPEC PARAGRAPH No.	DESCRIPTION OF SUBMITTAL	TYPE OF SUBMITTAL	CLASSI-FICATION FIO GA, DA or CR	CONTRACTOR REVIEWER	CONTRACTOR SCHEDULE DATES: SUBMIT NEEDED BY	APPROVAL NEEDED BY	MATERIAL NEEDED BY	CONTRACTOR ACTION: CODE	CORPS RECEIVED DATE	GOVERNMENT ACTION: CODE	CORPS RETURNED DATE
A2120	1	1	03511 1.03	Concrete Mix Design - Paverite	DESIGN DATA	FIO	mdl	14 Apr 11	14 Apr 11	14 Apr 11	A	23 Mar 11	F	01 Apr 11
A2450	2	3	03511 2.2	Reinforcing Steel - Paverite	PRODUCT DATA	FIO	mdl	08 Jun 11	08 Jul 11	08 Jul 11	A	28 Mar 11	F	01 Apr 11
	3	4	03511 2.05	JD Russell Expansion Joint	PRODUCT DATA	FIO	mdl				A	11 Aug 11	F	12 Aug 11
SECTION - 04200			**Masonry**											
M1010	1.1	1	04200 B	CMU Block Certifications - Alimi	CERTIFICATES	FIO	mdl	28 Apr 11	28 Apr 11	03 May 11	A	01 Apr 11	F	
M1010	1.1	2	04200 D	Mortar Test Results - Alimi	TEST REPORTS	FIO	mdl	28 Apr 11	28 Apr 11	03 May 11	A	01 Apr 11	F	
M1000	2	3	04200 D.7	Portland Lime Mortar Mix Certificate	CERTIFICATES	FIO	mdl	28 Apr 11	28 Apr 11	28 Apr 11	A	17 Jan 11	F	19 Jan 11
M1000	2	4	04200 D.7	Portland Lime Mortar Mat'l Test Report	TEST REPORTS	FIO	mdl	28 Apr 11	28 Apr 11	28 Apr 11	A	17 Jan 11	F	19 Jan 11
M1000	2	5	04200 D.1	Type I/II Portland Cement Certificate	CERTIFICATES	FIO	mdl	29 Mar 11	28 Apr 11	28 Apr 11	A	17 Jan 11	F	19 Jan 11
M1000	2	6	04200 D.1	Type I/II Portland Cement Test Report	TEST REPORTS	FIO	mdl	29 Mar 11	28 Apr 11	28 Apr 11	A	17 Jan 11	F	19 Jan 11
M1000	2	7	04200 D.3	Mortar Sand Test Report	TEST REPORTS	FIO	mdl	29 Mar 11	28 Apr 11	28 Apr 11	A	17 Jan 11	F	19 Jan 11
M1000	2	8	04200 D.2	Finish Lime/Mortar Lime Certificate	CERTIFICATES	FIO	mdl	29 Mar 11	28 Apr 11	28 Apr 11	A	17 Jan 11	F	19 Jan 11
M1000	3	9	04200 A	Face Brick Veneer Anchors	PRODUCT DATA	FIO	mdl	29 Mar 11	28 Apr 11	28 Apr 11	A	17 Jan 11	F	19 Jan 10
M1000	4	10	04200 D.4	Integral Water Repellent	PRODUCT DATA	FIO	mdl	29 Mar 11	28 Apr 11	28 Apr 11	A	19 Jan 11	F	24 Jan 11
M1000	5	11	04200 E.1	Weep Hole Vents	PRODUCT DATA	FIO	mdl	29 Mar 11	28 Apr 11	28 Apr 11	A	31 Jan 11	F	04 Feb 11
M1050	10	12	04200 D.8	Lintels	PRODUCT DATA	FIO	mdl	13 Apr 11	13 May 11	13 May 11	A	26 Apr 11	F	28 Apr 11
M1100	6	13	04200 A.1/2/3	Face Brick	PRODUCT DATA	FIO	mdl	01 May 11	31 May 11	31 May 11	A	17 Mar 11	F	04 Apr 11
	8	14	04200 E.3	Joint Filler - Neoprene	PRODUCT DATA	FIO	mdl				A	26 Apr 11	F	28 Apr 11
	8	15	04200 D.9	Non-shrink Grout	PRODUCT DATA	FIO	mdl				A	26 Apr 11	F	28 Apr 11
	8	16	04200 E	Mortarnet	PRODUCT DATA	FIO	mdl				A	26 Apr 11	F	28 Apr 11
	8	17	04200 E.1	Backer Rod	PRODUCT DATA	FIO	mdl				A	26 Apr 11	F	28 Apr 11
	7	18	04200 D.1	Grout - Corefill	PRODUCT DATA	FIO	mdl				A	26 Apr 11	F	28 Apr 11
	9	19	04200 D.9	Non-shrink Grout - Quikcrete	PRODUCT DATA	FIO	mdl				A	26 Apr 11	F	28 Apr 11
	11	20	04200 Detail C	Control Joint	PRODUCT DATA	FIO	mdl				A	26 Apr 11	F	05 May 11
	12	21	04200 D	Sakrete Type S Mortar	PRODUCT DATA	FIO	mdl				A	27 Jun 11	F	01 Jul 11
	12	22	04200 E	Concrete Brick	PRODUCT DATA	FIO	mdl				A	27 Jun 11	F	01 Jul 11
	13	23	04200 E	Adhesive for Insulation Application	PRODUCT DATA	FIO	mdl				A	01 Jul 11	F	01 Jul 11
SECTION - 05500			**Miscellaneous Metal**											
DWP120	3	1	05500 Detail D	Bollard Pipe Product Data	PRODUCT DATA	FIO	mdl	04 Jul 11	04 Jul 11	04 Jul 11	A	02 May 11	F	05 May 11
DWP120	1	2	05500 1.03.A	Stair Nosing	PRODUCT DATA	FIO	mdl	04 Jul 11	04 Jul 11	04 Jul 11	A	28 Mar 11	F	01 Apr 11
DWP120	7.2	3	05500 1.03.B	Calculations - Loads on Railings	DESIGN DATA	FIO	SysAdmin	04 Jul 11	04 Jul 11	04 Jul 11	A	08 Mar 12	F	24 May 12
DWP120	8	4	05500 1.03.B	Manufacturer's Load and Deflection Table	PRODUCT DATA	FIO	mdl	04 Jul 11	04 Jul 11	04 Jul 11	A	17 Oct 11	F	18 Oct 11
DWP120	8	5	05500 1.03.C	Railing System OSHA Certification	CERTIFICATES	FIO	mdl	04 Jul 11	04 Jul 11	04 Jul 11	A	17 Oct 11	F	18 Oct 11
DWP120	6	6	05500 Detail B	Sole Plate and Anchors	SHOP DRAWINGS	FIO	mdl	04 Jul 11	04 Jul 11	04 Jul 11	A	02 Sep 11	F	06 Sep 11
A2790	2	7	05500 1.03A	Sump Grate and Frame	PRODUCT DATA	FIO	mdl	28 Mar 11	27 Apr 11	27 Apr 11	A	28 Mar 11	F	01 Apr 11

RANGE : ALL

SORT : SECTION & ITEM

SUBMITTAL REGISTER (ER 415-1-10)

TITLE AND LOCATION: Rockaway Wellfield Superfund Site, EM/WS,Rockaway Borough, East Main/Wall Street, Morris County, NJ

DATE: 15 Aug 2012

CONTRACTOR: CAPE Environmental Management Inc.

CONTRACT NUMBER: W912DQ-05-D-0001 0005

ACTIVITY No.	TRANS-MITTAL No.	ITEM No.	SPEC PARAGRAPH No.	DESCRIPTION OF SUBMITTAL	TYPE OF SUBMITTAL	CLASSI-FICATION FIO GA, DA or CR	CONTRACTOR REVIEWER	CONTRACTOR SCHEDULE DATES: SUBMIT NEEDED BY	APPROVAL NEEDED BY	MATERIAL NEEDED BY	CONTRACTOR ACTION: CODE	CORPS RECEIVED DATE	GOVERNMENT ACTION: CODE	CORPS RETURNED DATE
	4	8	05500 3	Louvers	PRODUCT DATA	FIO	mdl				A	02 May 11	F	05 May 11
	5	9	05500 Detail B&F	Bent Plate	SHOP DRAWINGS	FIO	mdl				A	13 Jun 11	F	16 Jun 11
	8	10	05500 1.03A	Hand Railing	SHOP DRAWINGS	FIO	mdl				A	17 Oct 11	F	18 Oct 11
SECTION - 07005			**AMIPRO and Waterproofing**											
	1	1	07005 A,B,C	Dampproofing AMIPRO	PRODUCT DATA	FIO	mdl				A	01 Mar 11	F	12 Mar 11
A2790	2	2	07005 C	Through Wall Flashing	DESIGN DATA	FIO	mdl	27 Apr 11	27 Apr 11	27 Apr 11	A	26 Apr 11	F	28 Apr 11
A2310	3	3	07005 A,B,C	Dampproofing and Waterproofing	CERTIFICATES	FIO	SysAdmin	09 Aug 11	09 Aug 11	09 Aug 11	A	02 Mar 12	F	30 Mar 12
SECTION - 07231			**Perimeter Insulation and Vapor Barrier**											
A2650	1	1	07231 A	Perimeter Insulation	PRODUCT DATA	FIO	mdl	07 Mar 11	07 Mar 11	07 Mar 11	A	31 Jan 11	F	04 Feb 11
A2650	2	2	07231 B	Vapor Barrier	PRODUCT DATA	FIO	mdl	05 Feb 11	07 Mar 11	07 Mar 11	A	31 Jan 11	F	04 Feb 11
SECTION - 07510			**SBS Modified Bitumen Roofing System**											
R1000	1	1	07510 C/D/E	SBS Roofing Product Data	PRODUCT DATA	FIO	mdl	31 May 11	31 May 11	31 May 11	A	02 May 11	F	05 May 11
R1000	2	2	07510 H/I	Parapet Coping/Downspouts/Scuppers	PRODUCT DATA	FIO	mdl	31 May 11	31 May 11	31 May 11	A	01 Jul 11	F	01 Jul 11
R1000	3	3	07510 Detail A/B	Wood Blocking and Anchoring	PRODUCT DATA	FIO	mdl	31 May 11	31 May 11	31 May 11	A	06 Jul 11	F	14 Jul 11
R1000	4.1	4	07510 A - H	Roofing System	DESIGN DATA	FIO	SysAdmin	31 May 11	31 May 11	31 May 11	A	24 Apr 12	F	24 May 12
R1000	5.1	5	07510 A - H	Roofing System	TEST REPORTS	FIO	SysAdmin	31 May 11	31 May 11	31 May 11	A	24 Apr 12	F	24 May 12
R1000	6	6	07510 A - H	Roofing System	CERTIFICATES	FIO	SysAdmin	31 May 11	31 May 11	31 May 11	A	02 Mar 12	F	30 Mar 12
SECTION - 07700			**Equipment Access Scuttle**											
R1010	1	1	07700 A	Equipment Access Hatch	SHOP DRAWINGS	FIO	mdl	15 Jun 11	15 Jun 11	15 Jun 11	A	05 Apr 11	F	18 Apr 11
R1010	1	2	07700 A	Equipment Access Hatch	PRODUCT DATA	FIO	mdl	15 Jun 11	15 Jun 11	15 Jun 11	A	05 Apr 11	F	18 Apr 11
R1010	2.1	3	07700 A	Equipment Access Hatch	DESIGN DATA	FIO	SysAdmin	31 May 11	31 May 11	31 May 11	A	24 Apr 12	F	24 May 12
A2310	3	4	07700 A	Equipment Access Hatch	TEST REPORTS	FIO	SysAdmin	09 Aug 11	09 Aug 11	09 Aug 11	A			
A2310	4	5	07700 A	Equipment Access Hatch	CERTIFICATES	FIO	SysAdmin	09 Aug 11	09 Aug 11	09 Aug 11	A	02 Mar 12	F	30 Mar 12
SECTION - 07900			**Joint Sealants**											
M1000	1	1	07900 A,B	Joint Sealant - Sikaflex-15LM	PRODUCT DATA	FIO	mdl	28 Apr 11	28 Apr 11	28 Apr 11	A	26 Apr 11	F	28 Apr 11
M1000	2	2	07900 A,B	Window and Door Frame Sealant-Intex	PRODUCT DATA	FIO	mdl	28 Apr 11	28 Apr 11	28 Apr 11	A	23 May 11	F	26 May 11
M1000	3	3	07900 A,B	Joint Sealants	DESIGN DATA	FIO	SysAdmin	28 Apr 11	28 Apr 11	28 Apr 11	A	02 Mar 12	F	30 Mar 12
A2310	4	4	07900 A,B	Joint Sealants	CERTIFICATES	FIO	SysAdmin	09 Aug 11	09 Aug 11	09 Aug 11	A	02 Mar 12	F	30 Mar 12
SECTION - 08120			**Aluminum Doors and Frames**											
M1000	1	1	08120 A - F	Aluminum Doors and Frames	SHOP DRAWINGS	FIO	mdl	28 Apr 11	28 Apr 11	28 Apr 11	A	27 Sep 11	F	03 Oct 11
M1000	1	2	08120 A - F	Aluminum Doors and Frames	PRODUCT DATA	FIO	mdl	28 Apr 11	28 Apr 11	28 Apr 11	A	27 Sep 11	F	03 Oct 11
M1000	1	3	08120 A - F	Frame Anchors	PRODUCT DATA	FIO	mdl	28 Apr 11	28 Apr 11	28 Apr 11	A	27 Sep 11	F	03 Oct 11
SECTION - 08390			**Watertight Doors**											
M1000	1	1	08390 A - J	Watertight Doors	SHOP DRAWINGS	FIO	mdl	28 Apr 11	28 Apr 11	28 Apr 11	A	07 Jul 11	F	08 Jul 11
	1.1	1.1	08390 A - J	Watertight Doors, Rev 1	SHOP DRAWINGS	FIO	mdl				A	24 Aug 11	F	20 Sep 11

RANGE : ALL

SORT : SECTION & ITEM

SUBMITTAL REGISTER (ER 415-1-10)

TITLE AND LOCATION: Rockaway Wellfield Superfund Site, EM/WS,Rockaway Borough, East Main/Wall Street, Morris County, NJ

DATE: 15 Aug 2012

CONTRACTOR: CAPE Environmental Management Inc.

CONTRACT NUMBER: W912DQ-05-D-0001 0005

ACTIVITY No.	TRANS-MITTAL No.	ITEM No.	SPEC PARAGRAPH No.	DESCRIPTION OF SUBMITTAL	TYPE OF SUBMITTAL	CLASSI-FICATION FIO GA, DA or CR	CONTRACTOR REVIEWER	CONTRACTOR SCHEDULE DATES: SUBMIT NEEDED BY	APPROVAL NEEDED BY	MATERIAL NEEDED BY	CONTRACTOR ACTION: CODE	CORPS RECEIVED DATE	GOVERNMENT ACTION: CODE	CORPS RETURNED DATE
M1000	1	2	08390 A - J	Watertight Doors	PRODUCT DATA	FIO	mdl	28 Apr 11	28 Apr 11	28 Apr 11	A	07 Jul 11	F	08 Jul 11
	1.1	2.1	08390 A - J	Watertight Doors, Rev 1	PRODUCT DATA	FIO	mdl				A	24 Aug 11	F	20 Sep 11
M1000	1.1	3	08390 A - J	Watertight Doors, Rev 1	DESIGN DATA	FIO	mdl	28 Apr 11	28 Apr 11	28 Apr 11	A	24 Aug 11	F	20 Sep 11
A2310	2	4	08390 A - J	Watertight Doors, Rev 1	TEST REPORTS	FIO	SysAdmin	09 Aug 11	09 Aug 11	09 Aug 11	A	02 Mar 12	F	30 Mar 12
A2310	3	5	08390 A - J	Watertight Doors, Rev 1	CERTIFICATES	FIO	SysAdmin	09 Aug 11	09 Aug 11	09 Aug 11	A	02 Mar 12	F	30 Mar 12
SECTION - 08522			**Aluminum Windows**											
M1000	1	1	08522 A	Aluminum Windows Drawings	SHOP DRAWINGS	FIO	mdl	28 Apr 11	28 Apr 11	28 Apr 11	A	25 Aug 11	FX	01 Sep 11
M1000	1	2	08522 A	Aluminum Windows Product Data	PRODUCT DATA	FIO	mdl	28 Apr 11	28 Apr 11	28 Apr 11	A	25 Aug 11	FX	01 Sep 11
M1000	1	3	08522 A	Aluminum Windows Design Data	DESIGN DATA	FIO	mdl	28 Apr 11	28 Apr 11	28 Apr 11	A	25 Aug 11	FX	01 Sep 11
SECTION - 08710			**Door Hardware**											
M1000	1	1	08710 A - C	Finish Hardware-Flood Doors	PRODUCT DATA	FIO	mdl	28 Apr 11	28 Apr 11	28 Apr 11	A	02 Sep 11	F	06 Sep 11
	2	2	08710 A-C	GW-1 Door Hardware	PRODUCT DATA	FIO	mdl				A	27 Sep 11	F	03 Oct 11
SECTION - 08800			**Glazing**											
M1000	1	1	08800 A	Glass	PRODUCT DATA	FIO	mdl	28 Apr 11	28 Apr 11	28 Apr 11	A	23 May 11	F	26 May 11
SECTION - 09900			**Painting**											
DWP110	1	1	09900 A	Painting	PRODUCT DATA	FIO	mdl	27 Jun 11	27 Jun 11	27 Jun 11	A	21 Jun 11	F	27 Jun 11
DWP160	3	2	09900 A,B	Painting	TEST REPORTS	FIO	SysAdmin	05 Jul 11	05 Jul 11	05 Jul 11	A	05 Jan 12	F	03 Feb 12
DWP160	3	3	09900 A,B	Painting	CERTIFICATES	FIO	SysAdmin	05 Jul 11	05 Jul 11	05 Jul 11	A	05 Jan 12	F	03 Feb 12
	2	4	09900 A	Parking Lot Striping Paint	PRODUCT DATA	FIO	mdl				A	15 Aug 11	F	18 Aug 11
SECTION - 09901			**Surface Preparation and Shop Prime Painting**											
DWP110	1.1	1	09901 1.03.A	Shop Drawings	SHOP DRAWINGS	FIO	SysAdmin	27 Jun 11	27 Jun 11	27 Jun 11	A	24 Apr 12	F	24 May 12
DWP110	1.1	2	09901 1.03.A	Manufacturer's Specifications and Data	PRODUCT DATA	FIO	SysAdmin	27 Jun 11	27 Jun 11	27 Jun 11	A	24 Apr 12	F	24 May 12
DWP110	1.1	3	09901 1.03.B	Primer Samples (if required by Engineer)	SAMPLES	FIO	SysAdmin	27 Jun 11	27 Jun 11	27 Jun 11	A	24 Apr 12	F	24 May 12
DWP110	1.1	4	09901 3.02.D	Evidence of Compatablilty of Paints	PRODUCT DATA	FIO	SysAdmin	27 Jun 11	27 Jun 11	27 Jun 11	A	24 Apr 12	F	24 May 12
SECTION - 10522			**Fire Extinguishers**											
A2430	1	1	10522 A,B	Fire Extinguishers	PRODUCT DATA	FIO	mdl	22 Jul 11	22 Jul 11	22 Jul 11	A	22 Mar 11	F	
A2430	2.1	2	10522 A,B	Fire Extinguishers	TEST REPORTS	FIO	SysAdmin	22 Jul 11	22 Jul 11	22 Jul 11	A	24 Apr 12	F	24 May 12
SECTION - 11319			**Sump Pump**											
A3330	1	1	11319 Note 18	Sump Pump - shop drawings	SHOP DRAWINGS	FIO	mdl	22 Jun 11	22 Jun 11	22 Jun 11	A	16 May 11	F	13 Jun 11
A3330	1	2	11319 Note 18	Sump Pump - manufacturers rating curves	DESIGN DATA	FIO	mdl	22 Jun 11	22 Jun 11	22 Jun 11	A	16 May 11	F	13 Jun 11
A3330	1	3	11319 Note 18	Sump Pump - parts list	PRODUCT DATA	FIO	mdl	22 Jun 11	22 Jun 11	22 Jun 11	A	16 May 11	F	13 Jun 11
A3330	2.1	4	11319 Note 18	Sump Pump - certified pump test data	TEST REPORTS	FIO	SysAdmin	22 Jun 11	22 Jun 11	22 Jun 11	A	24 Apr 12	F	24 May 12
A3330	1	5	11319 Note 18	Sump Pump - motor data including Hp, V,	DESIGN DATA	FIO	mdl	22 Jun 11	22 Jun 11	22 Jun 11	A	16 May 11	F	13 Jun 11
A3330	1	6	11319 Note 18	Sump Pump - complete wiring diagram and	DESIGN DATA	FIO	mdl	22 Jun 11	22 Jun 11	22 Jun 11	A	16 May 11	F	13 Jun 11
A2310	1	7	11319 Note 18	Sump Pump - manufacturers waranty	CERTIFICATES	FIO	mdl	09 Aug 11	09 Aug 11	09 Aug 11	A	16 May 11	F	13 Jun 11

RANGE : ALL

SORT : SECTION & ITEM

SUBMITTAL REGISTER (ER 415-1-10)

TITLE AND LOCATION: Rockaway Wellfield Superfund Site, EM/WS,Rockaway Borough, East Main/Wall Street, Morris County, NJ

DATE: 15 Aug 2012

CONTRACTOR: CAPE Environmental Management Inc.

CONTRACT NUMBER: W912DQ-05-D-0001 0005

ACTIVITY No.	TRANS-MITTAL No.	ITEM No.	SPEC PARAGRAPH No.	DESCRIPTION OF SUBMITTAL	TYPE OF SUBMITTAL	CLASSI-FICATION FIO GA, DA or CR	CONTRACTOR REVIEWER	CONTRACTOR SCHEDULE DATES SUBMIT NEEDED BY	APPROVAL NEEDED BY	MATERIAL NEEDED BY	CONTRACTOR ACTION CODE	CORPS RECEIVED DATE	GOVERNMENT ACTION CODE	CORPS RETURNED DATE
A2310	2.1	8	11319 Note 18	Sump Pump - field test results	TEST REPORTS	FIO	SysAdmin	09 Aug 11	09 Aug 11	09 Aug 11	A	24 Apr 12	F	24 May 12
SECTION - 11350			**Removable Tray Air Stripper**											
A1820	1	1	11350 1.04.A	Shop and Erection Drawings	SHOP DRAWINGS	FIO	mdl	17 May 11	17 May 11	17 May 11	A	03 May 11	F	23 May 11
A1820	1	2	11350 1.04.A	Equipment Information	PRODUCT DATA	FIO	mdl	17 May 11	17 May 11	17 May 11	A	03 May 11	F	23 May 11
A1820	1	3	11350 1.04.A	Pressure Drop	DESIGN DATA	FIO	mdl	17 May 11	17 May 11	17 May 11	A	03 May 11	F	23 May 11
A1820	1	4	11350 1.04.A	System Flow Schematic or Pipe Layout	DESIGN DATA	FIO	mdl	17 May 11	17 May 11	17 May 11	A	03 May 11	F	23 May 11
A1820	4	6	11350 1.04.A	List of Spare Parts	PRODUCT DATA	FIO	SysAdmin	17 May 11	17 May 11	17 May 11	A			
A2310	2	7	11350 1.04.A	Air Stripper Test Results	TEST REPORTS	FIO	mdl	09 Aug 11	09 Aug 11	09 Aug 11	A			
A1820	1	8	11350 1.04.A	Weight of Equipment	PRODUCT DATA	FIO	mdl	17 May 11	17 May 11	17 May 11	A	03 May 11	F	23 May 11
A1820	1	9	11350 1.04.A	Structural Design Calculations	DESIGN DATA	FIO	mdl	17 May 11	17 May 11	17 May 11	A	03 May 11	F	23 May 11
A1820	1	10	11350 1.04.B	O & M Literature	O&M DATA	FIO	mdl	17 May 11	17 May 11	17 May 11	A	03 May 11	F	23 May 11
A2310	1	11	11350 3.05	Warranty	CERTIFICATES	FIO	mdl	09 Aug 11	09 Aug 11	09 Aug 11	A	03 May 11	F	23 May 11
A3310	3	12	11350 1.04A.2	Removable Air Stripper - Exhaust Fans	PRODUCT DATA	FIO	mdl	06 Jun 11	06 Jul 11	06 Jul 11	A	05 Jan 12	F	03 Feb 12
A3310	5	13	11350 1.04A.2	Unit Heaters	PRODUCT DATA	FIO	SysAdmin	06 Jun 11	06 Jul 11	06 Jul 11	A			
SECTION - 11355			**Bagfilter**											
A1930	1.1	1	11355 Note 19	Bag filter housing- shop drawings	SHOP DRAWINGS	FIO	mdl	21 Feb 11	21 Feb 11	21 Feb 11	A	08 Mar 11	F	25 Mar 11
A1930	1.1	2	11355 Note 19	Bag filter housing- manufacturers info i	PRODUCT DATA	FIO	mdl	21 Feb 11	21 Feb 11	21 Feb 11	A	08 Mar 11	F	25 Mar 11
A1930	1.1	3	11355 Note 19	Bag filter - certification	CERTIFICATES	FIO	mdl	21 Feb 11	21 Feb 11	21 Feb 11	A	08 Mar 11	F	25 Mar 11
A1930	1.1	4	11355 Note 19	Bag filter - manufacturers waranty	CERTIFICATES	FIO	mdl	21 Feb 11	21 Feb 11	21 Feb 11	A	08 Mar 11	F	25 Mar 11
A2310	2	5	11355 Note 19	Bagfilter - Pressure Test and Inspection	TEST REPORTS	FIO	mdl	09 Aug 11	09 Aug 11	09 Aug 11	A	22 Mar 11	F	01 Apr 11
A1930	1.1	7	11355 Note 19	Filter bags - manfuacturers literature	PRODUCT DATA	FIO	mdl	21 Feb 11	21 Feb 11	21 Feb 11	A	08 Mar 11	F	25 Mar 11
SECTION - 11396			**Vapor Phase GAC Adsorbers**											
A1820	1	1	11396 1.03.A	Shop Drawings	SHOP DRAWINGS	FIO	mdl	17 May 11	17 May 11	17 May 11	A	03 May 11	F	23 May 11
A1820	1	2	11396 1.03.A	Manufacturer's literature	PRODUCT DATA	FIO	mdl	17 May 11	17 May 11	17 May 11	A	03 May 11	F	23 May 11
A1820	1	3	11396 1.03.A	Design Calculations	DESIGN DATA	FIO	mdl	17 May 11	17 May 11	17 May 11	A	03 May 11	F	23 May 11
A1820	1	4	11396 1.03.A	Media Specifications	PRODUCT DATA	FIO	mdl	17 May 11	17 May 11	17 May 11	A	03 May 11	F	23 May 11
A1820	1	5	11396 1.03.A	Vessel Interior and Exterior Coating	PRODUCT DATA	FIO	mdl	17 May 11	17 May 11	17 May 11	A	03 May 11	F	23 May 11
A1820	1	6	11396 1.03.A	Equipment Weights	PRODUCT DATA	FIO	mdl	17 May 11	17 May 11	17 May 11	A	03 May 11	F	23 May 11
A1820	1	7	11396 1.03.A	Design Calculation Certification	CERTIFICATES	FIO	mdl	17 May 11	17 May 11	17 May 11	A	03 May 11	F	23 May 11
A1820	2	12	11396 1.03.B, 2.0	Factory Test Report	TEST REPORTS	FIO		17 May 11	17 May 11	17 May 11	A	06 Jul 11	F	14 Jul 11
A1820	5	13	11396 1.03.B	Field Inspection	MFRS FLD REPT	FIO	SysAdmin	17 May 11	17 May 11	17 May 11	A			
A2310	3	14	11396 1.03.B	Test Report	TEST REPORTS	FIO	SysAdmin	09 Aug 11	09 Aug 11	09 Aug 11	A			
A2310	4	15	11396 1.03.B	Manufacturer's Certificate of Proper Ins	CERTIFICATES	FIO	SysAdmin	09 Aug 11	09 Aug 11	09 Aug 11	A			
A1820	4	16	11396 1.05.B	Tank Fabrication and Installation Schedu	PRECON SUBMTL	FIO	SysAdmin	17 May 11	17 May 11	17 May 11	A			
A1820	6	17	11396 2.06.F	GAC Data	PRODUCT DATA	FIO	SysAdmin	17 May 11	17 May 11	17 May 11	A			

RANGE : ALL

SORT : SECTION & ITEM

SUBMITTAL REGISTER (ER 415-1-10)

TITLE AND LOCATION: Rockaway Wellfield Superfund Site, EM/WS,Rockaway Borough, East Main/Wall Street, Morris County, NJ

DATE: 15 Aug 2012

CONTRACTOR: CAPE Environmental Management Inc.

CONTRACT NUMBER: W912DQ-05-D-0001 0005

ACTIVITY No.	TRANS-MITTAL No.	ITEM No.	SPEC PARAGRAPH No.	DESCRIPTION OF SUBMITTAL	TYPE OF SUBMITTAL	CLASSI-FICATION FIO GA, DA or CR	CONTRACTOR REVIEWER	CONTRACTOR SCHEDULE DATES: SUBMIT NEEDED BY	APPROVAL NEEDED BY	MATERIAL NEEDED BY	CONTRACTOR ACTION: CODE	CORPS RECEIVED DATE	GOVERNMENT ACTION: CODE	CORPS RETURNED DATE
SECTION - 11760			**First Aid Kits**											
A2310	1	1	11760 A,B	First Aid Kit	PRODUCT DATA	FIO	mdl	09 Aug 11	09 Aug 11	09 Aug 11	A	23 May 11	F	26 May 11
SECTION - 13420			**Instruments**											
A3340	1	1	13420 1.3.A	Instrument Shop Drawings	SHOP DRAWINGS	FIO	mdl	29 Jun 11	29 Jun 11	29 Jun 11	A	22 Mar 11	F	01 Apr 11
A3340	1	2	13420 1.3.B	Instrument Product Data	PRODUCT DATA	FIO	mdl	29 Jun 11	29 Jun 11	29 Jun 11	A	22 Mar 11	F	01 Apr 11
A3340	1	4	13420 1.3.D	Instrument Manufacturer's Instructions	MFRS INSTR	FIO	mdl	29 Jun 11	29 Jun 11	29 Jun 11	A	22 Mar 11	F	01 Apr 11
A2310	3	5	13420 1.3.E	Manufacturer's Field Reports	MFRS FLD REPT	FIO	SysAdmin	09 Aug 11	09 Aug 11	09 Aug 11	A			
	2	8	13420 1.3B	GW-1 Instruments	PRODUCT DATA	FIO	mdl				A	23 May 11	F	26 May 11
SECTION - 13431			**Control Panels**											
A3320	2	1	13431 1.3.A	PLC Panel	SHOP DRAWINGS	FIO	mdl	06 Jul 11	06 Jul 11	06 Jul 11	A	03 May 11	F	23 May 11
A3320	2	2	13431 1.3.B	PLC Panel Wiring Diagrams	DESIGN DATA	FIO	mdl	06 Jul 11	06 Jul 11	06 Jul 11	A	03 May 11	F	23 May 11
A3320	2	3	13431 1.3.C	PLC Panel Layout Drawings	DESIGN DATA	FIO	mdl	06 Jul 11	06 Jul 11	06 Jul 11	A	03 May 11	F	23 May 11
A3320	4	4	13431 1.3.D	Product Data	PRODUCT DATA	FIO	SysAdmin	06 Jul 11	06 Jul 11	06 Jul 11	A			
A3320	3	5	13431 1.3.E	Manufacturer's Instructions	MFRS INSTR	FIO	SysAdmin	06 Jul 11	06 Jul 11	06 Jul 11	A			
A3320	1	8	13431 1.3A	Remote I/O Panel	SHOP DRAWINGS	FIO	mdl	06 Jun 11	06 Jul 11	06 Jul 11	A	03 May 11	F	23 May 11
A3320	1	9	13431 1.03B	Remote I/O Panel Wiring Diagram	DESIGN DATA	FIO	mdl	06 Jun 11	06 Jul 11	06 Jul 11	A	03 May 11	F	23 May 11
A3320	1	10	13431 1.3.C	Remote I/O Panel Layout Drawings	DESIGN DATA	FIO	mdl	06 Jun 11	06 Jul 11	06 Jul 11	A	03 May 11	F	23 May 11
SECTION - 13451			**Programmable Controllers**											
A3320	4	1	13451 1.3.A	Shop Drawings	SHOP DRAWINGS	FIO	SysAdmin	06 Jul 11	06 Jul 11	06 Jul 11	A			
A3320	1	2	13451 1.3.D	PLC Ladder Logic	PRODUCT DATA	FIO	mdl	06 Jul 11	06 Jul 11	06 Jul 11	A	16 Sep 11	F	20 Sep 11
A3320	2	3	13451 1.3.C	Manufacturer's Instructions	MFRS INSTR	FIO	SysAdmin	06 Jul 11	06 Jul 11	06 Jul 11	A			
A3320	3	4	13451 1.3.D	PLC Ladder Logic Software and Databases	DESIGN DATA	FIO	SysAdmin	06 Jul 11	06 Jul 11	06 Jul 11	A	02 Mar 12	F	30 Mar 12
A3320		5	13451 1.4	Backup Copy of PLC Software Source Codes	CLOSEOUT SUBMTL	FIO		06 Jul 11	06 Jul 11	06 Jul 11				
SECTION - 13452			**SCADA Computer System**											
A3320	4	1	13452 1.3.A	Shop Drawings	SHOP DRAWINGS	FIO	SysAdmin	06 Jul 11	06 Jul 11	06 Jul 11	A			
A3320	1	2	13452 1.3.D	HMI Screen Shots	PRODUCT DATA	FIO	mdl	06 Jul 11	06 Jul 11	06 Jul 11	A	16 Sep 11	F	20 Sep 11
A3320	2	3	13452 1.3.C	Manufacturer's Instructions	MFRS INSTR	FIO	SysAdmin	06 Jul 11	06 Jul 11	06 Jul 11	A			
A3320	3	4	13452 1.3.D	SCADA Screens, Databases, and Codes	DESIGN DATA	FIO	SysAdmin	06 Jul 11	06 Jul 11	06 Jul 11	A	02 Mar 12	F	30 Mar 12
A3320	2	5	13452 1.4	Backup Copy of SCADA HMI Codes	CLOSEOUT SUBMTL	FIO	SysAdmin	06 Jul 11	06 Jul 11	06 Jul 11	A			
SECTION - 15051			**Piping - General Requirements**											
A3340	2	1	15051 1.03.B	Potable Supply Lines	SHOP DRAWINGS	FIO	mdl	29 Jun 11	29 Jun 11	29 Jun 11	A	06 Jul 11	F	14 Jul 11
A3340	1	2	15051 1.03.B	Copper Pipe & Fittings	PRODUCT DATA	FIO	mdl	29 Jun 11	29 Jun 11	29 Jun 11	A	17 Jan 11	F	19 Jan 11
A3340	4	3	15051 1.03.B	GTS Piping	SHOP DRAWINGS	FIO	mdl	29 Jun 11	29 Jun 11	29 Jun 11	A	11 Aug 11	F	15 Aug 11
A3340	3	4	15051 1.03.A	GW-1 Ductile Iron Piping	SHOP DRAWINGS	FIO	mdl	29 Jun 11	29 Jun 11	29 Jun 11	A	08 Aug 11	F	12 Aug 11
A3340	6	5	15051 1.03.E	Shop Test Reports	TEST REPORTS	FIO	SysAdmin	29 Jun 11	29 Jun 11	29 Jun 11	A	02 Mar 12	F	30 Mar 12

RANGE : ALL

SORT : SECTION & ITEM

SUBMITTAL REGISTER (ER 415-1-10)

TITLE AND LOCATION: Rockaway Wellfield Superfund Site, EM/WS,Rockaway Borough, East Main/Wall Street, Morris County, NJ

DATE: 15 Aug 2012

CONTRACTOR: CAPE Environmental Management Inc.

CONTRACT NUMBER: W912DQ-05-D-0001 0005

ACTIVITY No.	TRANS-MITTAL No.	ITEM No.	SPEC PARAGRAPH No.	DESCRIPTION OF SUBMITTAL	TYPE OF SUBMITTAL	CLASSI-FICATION FIO GA, DA or CR	CONTRACTOR REVIEWER	CONTRACTOR SCHEDULE DATES SUBMIT NEEDED BY	APPROVAL NEEDED BY	MATERIAL NEEDED BY	CONTRACTOR ACTION CODE	CORPS RECEIVED DATE	GOVERNMENT ACTION CODE	CORPS RETURNED DATE
A3340	5	6	15051 1.03.E	Field Test Reports	TEST REPORTS	FIO	SysAdmin	29 Jun 11	29 Jun 11	29 Jun 11	A	05 Jan 12	F	03 Feb 12
A3340	6	8	15051 1.03.G	Manufacturer's Installation or Applicati	MFRS INSTR	FIO	SysAdmin	29 Jun 11	29 Jun 11	29 Jun 11	A	02 Mar 12	F	30 Mar 12
SECTION - 15063			**Copper Pipe and Tubing**											
A1690	1	1	15063 2.03	Lead Free Solder	PRODUCT DATA	FIO	mdl	29 May 11	28 Jun 11	28 Jun 11	A	14 Jan 11	F	31 Jan 11
SECTION - 15072			**Ductile Iron Pipe and Fittings**											
A3340	1	1	15072 1.02	Affadavit of Compliance from Manufacture	CERTIFICATES	FIO	mdl	29 Jun 11	29 Jun 11	29 Jun 11	A	20 Sep 11	F	20 Sep 11
A3340	1	2	15072 1.02	GW-1 DI Piping and Components	PRODUCT DATA	FIO	mdl	29 Jun 11	29 Jun 11	29 Jun 11	A	20 Sep 11	F	20 Sep 11
SECTION - 15075			**Flexible Hose**											
A3340	3	1	15075 Note 20	Flexible hose - shop drawings	SHOP DRAWINGS	FIO	SysAdmin	29 Jun 11	29 Jun 11	29 Jun 11	A	02 Mar 12	F	30 Mar 12
A3340	1	2	15075 Note 20	Flexible hose - product data	PRODUCT DATA	FIO	mdl	29 Jun 11	29 Jun 11	29 Jun 11	A	28 Jul 11	F	29 Jul 11
A3340	2.1	4	15075 Note 20	Flexible Hose - Shop Test Results	TEST REPORTS	FIO	SysAdmin	29 Jun 11	29 Jun 11	29 Jun 11	A	24 Apr 12	F	24 May 12
A2310	2.1	6	15075 Note 20	Flexible Hose - Field Test Results	TEST REPORTS	FIO	SysAdmin	09 Aug 11	09 Aug 11	09 Aug 11	A	24 Apr 12	F	24 May 12
A2310	3	9	15075 Note 20	Flexible hose quick connect fittings - s	SHOP DRAWINGS	FIO	SysAdmin	09 Aug 11	09 Aug 11	09 Aug 11	A	02 Mar 12	F	30 Mar 12
A2310	4	10	15075 Note 20	Flexible hose quick connect fittings - m	PRODUCT DATA	FIO	SysAdmin	09 Aug 11	09 Aug 11	09 Aug 11	A	02 Mar 12	F	30 Mar 12
SECTION - 15100			**Valves**											
A3340	2	1	15100 1.03.A	Equipment Information	PRODUCT DATA	FIO	SysAdmin	29 Jun 11	29 Jun 11	29 Jun 11	A	02 May 11	F	26 May 11
A3340	2	2	15100 1.03.A	Shop Drawings	SHOP DRAWINGS	FIO	mdl	29 Jun 11	29 Jun 11	29 Jun 11	A	02 May 11	F	26 May 11
A3340	4	3	15100 1.03.A	Electrical Control Schematics & Wiring D	DESIGN DATA	FIO	SysAdmin	29 Jun 11	29 Jun 11	29 Jun 11	A			
A3340	3	4	15100 1.03.B	APCO AVRV Hydrotest Certificate	TEST REPORTS	FIO	SysAdmin	29 Jun 11	29 Jun 11	29 Jun 11	A	14 Dec 11	F	21 Dec 11
A3340	2	6	15100 1.03.D	Manufacturer's Installation and Applicat	MFRS INSTR	FIO	mdl	29 Jun 11	29 Jun 11	29 Jun 11	A	02 May 11	F	26 May 11
A2310	2	7	15100 1.03.E	O&M Data	O&M DATA	FIO	mdl	09 Aug 11	09 Aug 11	09 Aug 11	A	02 May 11	F	26 May 11
A2310	2	8	15100 1.09	Valve Schedule	PRECON SUBMTL	FIO	mdl	09 Aug 11	09 Aug 11	09 Aug 11	A	02 May 11	F	26 May 11
A3340	1	9	15100 1.3	Reduced Pressure Zone Backflow Preventer	SHOP DRAWINGS	FIO	mdl	29 Jun 11	29 Jun 11	29 Jun 11	A	27 Jan 11	F	04 Feb 11
A3340	5	10	15100 1.3	Reduced Pressure Zone Backflow Preventer	PRODUCT DATA	FIO	SysAdmin	29 Jun 11	29 Jun 11	29 Jun 11	A	02 Mar 12	F	30 Mar 12
A2310	6	12	15100 1.3	Reduced Pressure Zone Backflow Preventer	CERTIFICATES	FIO	SysAdmin	09 Aug 11	09 Aug 11	09 Aug 11	A	02 Mar 12	F	30 Mar 12
SECTION - 15120			**Piping Specialties**											
A3340	2	2	15120 1.03.B	Fernco Coupling Product Data	PRODUCT DATA	FIO	mdl	29 Jun 11	29 Jun 11	29 Jun 11	A	28 Jul 11	F	29 Jul 11
A2310	7	5	15120 1.03.E	Shop Test Reports	TEST REPORTS	FIO	SysAdmin	09 Aug 11	09 Aug 11	09 Aug 11	A	02 Mar 12	F	30 Mar 12
A2310	4	6	15120 1.03.E	Field Test Reports	TEST REPORTS	FIO	SysAdmin	09 Aug 11	09 Aug 11	09 Aug 11	A	05 Jan 12	F	03 Feb 12
A3340	2	8	15120 1.03.G	Fernco Coupling MFG Instructions	MFRS INSTR	FIO	mdl	29 Jun 11	29 Jun 11	29 Jun 11	A	28 Jul 11	F	29 Jul 11
A2310	5	10	15120 1.03.I	Manufacturer's Field Report	MFRS FLD REPT	FIO	SysAdmin	09 Aug 11	09 Aug 11	09 Aug 11	A	05 Jan 12	F	03 Feb 12
A2310	3	19	15120 1.3	Flow Meter and Straightener	TEST REPORTS	FIO	mdl	09 Aug 11	09 Aug 11	09 Aug 11	A	22 Nov 11	F	22 Nov 11
A2310	6	22	15120 1.3	Flow Meter and Straightener	MFRS FLD REPT	FIO	SysAdmin	09 Aug 11	09 Aug 11	09 Aug 11	A	05 Jan 12	F	03 Feb 12
A3340	1	24	15120 Detail G	Wash hose station - manufacturers info	PRODUCT DATA	FIO	mdl	29 Jun 11	29 Jun 11	29 Jun 11	A	13 Jun 11	F	16 Jun 11
A3340	1	25	15120 Detail G	Wash hose station - shop drawings	SHOP DRAWINGS	FIO	mdl	29 Jun 11	29 Jun 11	29 Jun 11	A	13 Jun 11	F	16 Jun 11

RANGE : ALL

SORT : SECTION & ITEM

SUBMITTAL REGISTER (ER 415-1-10)

TITLE AND LOCATION: Rockaway Wellfield Superfund Site, EM/WS,Rockaway Borough, East Main/Wall Street, Morris County, NJ

DATE: 15 Aug 2012

CONTRACTOR: CAPE Environmental Management Inc.

CONTRACT NUMBER: W912DQ-05-D-0001 0005

ACTIVITY No.	TRANS-MITTAL No.	ITEM No.	SPEC PARAGRAPH No.	DESCRIPTION OF SUBMITTAL	TYPE OF SUBMITTAL	CLASSI-FICATION FIO GA, DA or CR	CONTRACTOR REVIEWER	CONTRACTOR SCHEDULE DATES: SUBMIT NEEDED BY	APPROVAL NEEDED BY	MATERIAL NEEDED BY	CONTRACTOR ACTION: CODE	CORPS RECEIVED DATE	GOVERNMENT ACTION: CODE	CORPS RETURNED DATE
SECTION - 15140			**Pumps, Fueling System**											
A3340	2	1	15140 1.3	Pipe Hanger Supports	SHOP DRAWINGS	FIO	SysAdmin	29 Jun 11	29 Jun 11	29 Jun 11	A	02 Mar 12	F	30 Mar 12
A3340	1	2	15140 1.3	Pipe Hanger Supports	PRODUCT DATA	FIO	mdl	29 Jun 11	29 Jun 11	29 Jun 11	A	11 Aug 11	F	15 Aug 11
A3340	3	3	15140 1.3	Pipe Hanger Supports	DESIGN DATA	FIO	SysAdmin	29 Jun 11	29 Jun 11	29 Jun 11	A	02 Mar 12	F	30 Mar 12
A2310	4	4	15140 1.3	Pipe Hanger Supports	CERTIFICATES	FIO	SysAdmin	09 Aug 11	09 Aug 11	09 Aug 11	A	02 Mar 12	F	30 Mar 12
SECTION - 15250			**Thermal Insulation**											
A3340	1	1	15250 1.03.A	Pipe Insulation	PRODUCT DATA	FIO	mdl	29 Jun 11	29 Jun 11	29 Jun 11	A	17 Oct 11	F	18 Oct 11
	2	1.1	15250 1.03A	Pipe Insulation Alternate - Armacell	PRODUCT DATA	GA	mdl				A	14 Dec 10	F	21 Dec 11
A3340	1	2	15250 1.03.A	Manufacturer's Instructions	MFRS INSTR	FIO	mdl	29 Jun 11	29 Jun 11	29 Jun 11	A	17 Oct 11	F	18 Oct 11
A2310	3	3	15250 1.03.C, 2.0	Manufacturer's Certifications	CERTIFICATES	FIO	SysAdmin	09 Aug 11	09 Aug 11	09 Aug 11	A	02 Mar 12	F	30 Mar 12
A3340	4	4	15250 1.03.D, 1.0	Description of Protective Packaging	PRECON SUBMTL	FIO	SysAdmin	29 Jun 11	29 Jun 11	29 Jun 11	A	02 Mar 12	F	30 Mar 12
SECTION - 15500			**HVAC**											
A3310	2.1	1	15500 1.03.A, 2.0	Shop Drawings	SHOP DRAWINGS	FIO	SysAdmin	06 Jul 11	06 Jul 11	06 Jul 11	A	24 Apr 12	FX	24 May 12
A3310	1	2	15500 1.03.A, 1.0	HVAC Product Data	PRODUCT DATA	FIO	mdl	06 Jul 11	06 Jul 11	06 Jul 11	A	08 Mar 11	F	12 Mar 11
A2310	3.1	4	15500 1.03.A.8	Air System Test Reports	TEST REPORTS	FIO	SysAdmin	09 Aug 11	09 Aug 11	09 Aug 11	A	24 Apr 12	F	24 May 12
A2310	5	6	15500 1.03.A.9	Manufacturer's Instructions	MFRS INSTR	FIO	SysAdmin	09 Aug 11	09 Aug 11	09 Aug 11	A	02 Mar 12	F	30 Mar 12
A2310	4.1	9	15500 2.07, 3.03	Testing and Balancing Reports	TEST REPORTS	FIO	SysAdmin	09 Aug 11	09 Aug 11	09 Aug 11	A	24 Apr 12	F	24 May 12
SECTION - 16000			**Electrical - General Provisions**											
A3360	13	1	16000 1.03.A	Shop Drawings	SHOP DRAWINGS	FIO	SysAdmin	29 Jun 11	29 Jun 11	29 Jun 11	A	02 Mar 12	F	30 Mar 12
A3300	1	9	16000 n/a	Lighting Fixtures	PRODUCT DATA	FIO	mdl	01 May 11	31 May 11	31 May 11	A	28 Mar 11	F	01 Apr 11
		9.1	16000 n/a	Lighting Fixtures	PRODUCT DATA	FIO	mdl							
A1040	12	10	16000 1.03	Arc Flash Study	DATA	FIO	SysAdmin	01 Nov 10	01 Dec 10	01 Dec 10	A	06 Feb 12	F	08 Feb 12
SECTION - 16110			**Raceways, Boxes, Fittings and Supports**											
A2120	1	1	16110 1.03	PVC and RGS Conduit and Fittings	PRODUCT DATA	FIO	mdl	14 Apr 11	14 Apr 11	14 Apr 11	A	16 Mar 11	F	18 Mar 11
A3360	2	2	16110 1.03A	GTS Electrical - Ehrich Electric	PRODUCT DATA	FIO	mdl	30 May 11	29 Jun 11	29 Jun 11	A	13 Jun 11	F	16 Jun 11
	3	3	16110 2.02	Vault Electrical Boxes Type 3R	PRODUCT DATA	FIO	mdl				A	13 Jun 11	F	16 Jun 11
	4	4	16110 1.03A	GTS Misc Boxes/Switches	PRODUCT DATA	FIO	mdl				A	16 Sep 11	F	20 Sep 11
	5	5	16110 1.03	Liquid Tight Flexible Steel Conduit	PRODUCT DATA	FIO	mdl				A	20 Sep 11	F	20 Sep 11
SECTION - 16120			**Wire and Cables (600V Maximum)**											
A3360	1	1	16120 1.03.A	GTS Wiring Products-Ehrich	PRODUCT DATA	FIO	mdl	29 Jun 11	29 Jun 11	29 Jun 11	A	29 Mar 11	F	18 Apr 11
	2	5	16120 2.02/2.04	Trench Electric - Ehrich	PRODUCT DATA	FIO	mdl				A	13 Jun 11	F	16 Jun 11
	2.1	5.1	16120 2.02/2.04	Trench Electric - Ehrich Rev 1	PRODUCT DATA	FIO	mdl				A	24 Aug 11	F	29 Aug 11
	3	6	16120 1.03.A	VFD Cable	PRODUCT DATA	FIO	mdl				A	24 Aug 11	F	29 Aug 11
	4	7	16120 1.03A	#10 and #12 Wire	PRODUCT DATA	FIO	mdl				A	15 Sep 11	F	16 Sep 11
SECTION - 16122			**Fiberoptic Cable**											

RANGE : ALL

SORT : SECTION & ITEM

SUBMITTAL REGISTER (ER 415-1-10)

TITLE AND LOCATION: Rockaway Wellfield Superfund Site, EM/WS,Rockaway Borough, East Main/Wall Street, Morris County, NJ

DATE: 15 Aug 2012

CONTRACTOR: CAPE Environmental Management Inc.

CONTRACT NUMBER: W912DQ-05-D-0001 0005

ACTIVITY No.	TRANS-MITTAL No.	ITEM No.	SPEC PARAGRAPH No.	DESCRIPTION OF SUBMITTAL	TYPE OF SUBMITTAL	CLASSI-FICATION FIO GA, DA or CR	CONTRACTOR REVIEWER	CONTRACTOR SCHEDULE DATES: SUBMIT NEEDED BY	APPROVAL NEEDED BY	MATERIAL NEEDED BY	CONTRACTOR ACTION: CODE	CORPS RECEIVED DATE	GOVERNMENT ACTION: CODE	CORPS RETURNED DATE
A3360	1	1	16122 1.03A.1	Fiber Optic Shop Drawings	SHOP DRAWINGS	FIO	mdl	29 Jun 11	29 Jun 11	29 Jun 11	A	13 Jun 11	F	16 Jun 11
A3360	1	2	16122 1.03A.2	Fiber Optic Product Data	PRODUCT DATA	FIO	mdl	29 Jun 11	29 Jun 11	29 Jun 11	A	13 Jun 11	F	16 Jun 11
A3360	1	3	16122 1.03A.3	Fiber Optic Samples	SAMPLES	FIO	mdl	29 Jun 11	29 Jun 11	29 Jun 11	A	13 Jun 11	F	16 Jun 11
A3360	1	4	16122 1.03A.4	Fiber Optic Manufacturer's Instructions	MFRS INSTR	FIO	mdl	29 Jun 11	29 Jun 11	29 Jun 11	A	13 Jun 11	F	16 Jun 11
A2310	2	7	16122 3.02.D	Strip Recorder Printout	TEST REPORTS	FIO	SysAdmin	09 Aug 11	09 Aug 11	09 Aug 11	A	05 Jan 12	F	03 Feb 12
SECTION - 16141			**Wiring Devices**											
A3360	1	1	16141 2.01	Wiring Devices Product Data	PRODUCT DATA	FIO	mdl	29 Jun 11	29 Jun 11	29 Jun 11	A	29 Mar 11	F	
SECTION - 16191			**Miscellaneous Equipment**											
A3360	3	1	16191 1.03	GTS/GW-1 Electrical Information	PRODUCT DATA	FIO	mdl	29 Jun 11	29 Jun 11	29 Jun 11	A	08 Aug 11	F	12 Aug 11
	1	3	16191 1.03A	EW Vault Disconnect Safety Switches	PRODUCT DATA	FIO	mdl				A	13 Jun 11	F	16 Jun 11
	2	4	16191 2.01F	EW Vault Heat Tracing	PRODUCT DATA	FIO	mdl				A	13 Jun 11	F	16 Jun 11
		4.1	16191 2.01F	EW Vault Heat Tracing REV 1	PRODUCT DATA	FIO	mdl							
	4	5	16191 1.03A	GTS/GW-1 Electrical Drawing	SHOP DRAWINGS	FIO	mdl				A	08 Aug 11	F	12 Aug 11
	4.1	5.1	16191 1.03A	GTS/GW-1 Electrical Drawing Rev 1	SHOP DRAWINGS	FIO	mdl				A	19 Aug 11	F	29 Aug 11
	5	6	16191 1.03	TVSS Product Information	PRODUCT DATA	FIO	mdl				A	19 Aug 11	F	29 Aug 11
	6	7	16191 1.03	GW-1 and GTS Blower Motor Starters	PRODUCT DATA	FIO	mdl				A	10 Jan 12	F	20 Jan 12
	6	8	16191 1.03	GW-1 and GTS Blower Motor Starters	SHOP DRAWINGS	FIO	mdl				A	10 Jan 12	F	20 Jan 12
	7	9	16191 1.03	Exhaust Fan Motor Starters	PRODUCT DATA	FIO	mdl				A	20 Sep 11	F	20 Sep 11
SECTION - 16470			**Panelboards**											
A3300	1	1	16470 1.02	GW-1/GTS Panelboards Shop Drawings	SHOP DRAWINGS	FIO	mdl	31 May 11	31 May 11	31 May 11	A	18 Jul 11	F	25 Jul 11
	1.1	1.1	16470 1.02	GW-1/GTS Panelboards Shop DWG Rev 1	SHOP DRAWINGS	FIO	mdl				A	10 Aug 11	F	15 Aug 11
A3300	1	2	16470 1.02	GW-1/GTS Panelboards Product Data	PRODUCT DATA	FIO	mdl	31 May 11	31 May 11	31 May 11	A	18 Jul 11	F	25 Jul 11
	1.1	2.1	16470 1.02	GW-1/GTS Panelboards Product Data Rev 1	PRODUCT DATA	FIO	mdl				A	10 Aug 11	F	15 Aug 11
SECTION - 16482			**Variable Frequency Drive Controllers**											
A3300	2	1	16482 1.03	Shop Drawings	SHOP DRAWINGS	FIO	SysAdmin	31 May 11	31 May 11	31 May 11	A	02 Mar 12	F	02 Apr 12
A3300	1	2	16482 1.03	Product Data - VFD Terminations	PRODUCT DATA	DA	SysAdmin	31 May 11	31 May 11	31 May 11	A	03 Nov 11	FX	04 Nov 11
SECTION - 16502			**Lightning Protection System**											
A2430	2	1	16502 1.01.B	Lightning Protection - Warren Lightning	SHOP DRAWINGS	FIO	mdl	22 Jul 11	22 Jul 11	22 Jul 11	A	18 Jul 11	F	25 Jul 11
A2430	1	2	16502 1.01.B	Lightning Protection Materials	PRODUCT DATA	FIO	mdl	22 Jul 11	22 Jul 11	22 Jul 11	A	23 Mar 11	F	01 Apr 11
A2310	3	3	16502 1.01.C	UL Field Inspection Results	TEST REPORTS	FIO	SysAdmin	09 Aug 11	09 Aug 11	09 Aug 11	A	10 Jan 12	F	20 Jan 12
SECTION - 16600			**Underground System**											
A2430	1	1	16600 1.03.A	Shop Drawings - Trench Conduit	SHOP DRAWINGS	FIO	mdl	22 Jul 11	22 Jul 11	22 Jul 11	A	12 Jun 11	F	13 Jun 11
A2430	2	2	16600 1.03.A	Splicing/Crimping Product Data	PRODUCT DATA	FIO	mdl	22 Jul 11	22 Jul 11	22 Jul 11	A	16 Sep 11	F	20 Sep 11
SECTION - 16660			**Grounding System**											
A2430	5	1	16660 1.02.B	Shop Drawings	SHOP DRAWINGS	FIO	SysAdmin	22 Jul 11	22 Jul 11	22 Jul 11	A	05 Jan 12	F	03 Feb 12

RANGE : ALL

SORT : SECTION & ITEM

SUBMITTAL REGISTER (ER 415-1-10)

TITLE AND LOCATION: Rockaway Wellfield Superfund Site, EM/WS,Rockaway Borough, East Main/Wall Street, Morris County, NJ

DATE: 15 Aug 2012

CONTRACTOR: CAPE Environmental Management Inc.

CONTRACT NUMBER: W912DQ-05-D-0001 0005

ACTIVITY No.	TRANS-MITTAL No.	ITEM No.	SPEC PARAGRAPH No.	DESCRIPTION OF SUBMITTAL	TYPE OF SUBMITTAL	CLASSI-FICATION FIO GA, DA or CR	CONTRACTOR REVIEWER	CONTRACTOR SCHEDULE DATES: SUBMIT NEEDED BY	APPROVAL NEEDED BY	MATERIAL NEEDED BY	CONTRACTOR ACTION: CODE	CORPS RECEIVED DATE	GOVERNMENT ACTION: CODE	CORPS RETURNED DATE
A2120	1	2	16660 1.02 B	U/G Warning Tape	PRODUCT DATA	FIO	mdl	14 Apr 11	14 Apr 11	14 Apr 11	A	22 Mar 11	F	
A2310	4	3	16660 1.02.B, 3.0	Test Results - Grounding and Bonding Res	TEST REPORTS	FIO	SysAdmin	09 Aug 11	09 Aug 11	09 Aug 11	A			
A2430	2	4	16660 2.01A-G	Grounding System Product Data	PRODUCT DATA	FIO	mdl	22 Jun 11	22 Jul 11	22 Jul 11	A	28 Mar 11	F	01 Apr 11
	3	5	16660 1.02	Grounding System EW Vaults	PRODUCT DATA	FIO	mdl				A	13 Jun 11	F	16 Jun 11
SECTION - 16720			**Integrated Fies & Security Alarm Panel**											
F1000	1	1	16720 1.03.A.1	Fire Alarm &Security Panel Shop Drawings	SHOP DRAWINGS	FIO	mdl	31 May 11	31 May 11	31 May 11	A	14 Jun 11	F	27 Jun 11
F1000	1	2	16720 1.03.A.2	Fire Alarm &Security Panel Product Data	PRODUCT DATA	FIO	mdl	31 May 11	31 May 11	31 May 11	A	14 Jun 11	F	27 Jun 11
F1000	4	3	16720 1.03.A.3	Wiring Diagrams	DESIGN DATA	FIO	SysAdmin	31 May 11	31 May 11	31 May 11	A	02 Mar 12	F	30 Mar 12
F1000	4	4	16720 1.03.A.4	Manufacturer's Instructions	MFRS INSTR	FIO	SysAdmin	31 May 11	31 May 11	31 May 11	A	02 Mar 12	F	30 Mar 12
A2300	3	5	16720 1.03.B.1	Test Reports	TEST REPORTS	FIO	SysAdmin	09 Aug 11	09 Aug 11	09 Aug 11	A	14 Mar 12	F	24 May 12
A2310	3	6	16720 1.03.B.2	O&M Manuals	O&M DATA	FIO	SysAdmin	09 Aug 11	09 Aug 11	09 Aug 11	A	14 Mar 12	F	24 May 12
A2310	3	7	16720 1.03.B.3	Training Materials	TRAINING DATA	CR	SysAdmin	09 Aug 11	09 Aug 11	09 Aug 11	A	14 Mar 12	F	24 May 12
A2310	3	8	16720 1.03.B.4	Spare Parts List	PARTS LIST	FIO	SysAdmin	09 Aug 11	09 Aug 11	09 Aug 11	A	14 Mar 12	F	24 May 12
A2310	2	10	16720 3.01.C	Test Report Certificate	CERTIFICATES	FIO	SysAdmin	09 Aug 11	09 Aug 11	09 Aug 11	A			

RANGE : ALL

SORT : SECTION & ITEM

TRANSMITTAL OF SHOP DRAWINGS, EQUIPMENT DATA, MATERIAL SAMPLES, OR MANUFACTURER'S CERTIFICATES OF COMPLIANCE (Read instructions on the reverse side prior to initiating this form)	DATE 4/11/2011	TRANSMITTAL NO. 01451-14.2

SECTION I - REQUEST FOR APPROVAL OF THE FOLLOWING ITEMS (This section will be initiated by the contractor)

TO:	FROM:	CONTRACT NO.	CHECK ONE:
Environmental Residency US Army Corps of Engineers 214 State Highway 18 East Brunswick, NJ 08816	CAPE Environmental Management Inc. 180 Gordon Drive, Suite 105 Exton, PA 19341	W912DQ-05-D-0001 0005	☐ THIS IS A NEW TRANSMITTAL ☒ THIS IS A RESUBMITTAL OF TRANSMITTAL 01451-14.1

SPECIFICATION SEC. NO. (Cover only one section with each transmittal) 01451

PROJECT TITLE AND LOCATION 01-Main Register Rockaway Wellfield Superfund Site, EM/WS Rockaway Borough, East Main/Wall Street, Morris County, NJ

CHECK ONE: THIS TRANSMITTAL IS NOR ☐ FIO ☒ GA ☐ DA ☐ CR

ITEM NO. a.	DESCRIPTION OF ITEM SUBMITTED (Type size, model number/etc.) b.	MFG OR CONTR. CAT., CURVE DRAWING OR BROCHURE NO. (See instruction no. 8) c.	NO. OF COPIES d.	CONTRACT REFERENCE DOCUMENT SPEC. PARA. NO. e.	CONTRACT REFERENCE DOCUMENT DRAWING SHEET NO. f.	FOR CONTRACTOR USE CODE g.	VARIATION (See instruction No. 6) h.	FOR CE USE CODE i.
18.1	Work Plan GTS Construction REV 2	PRECON SUBMTL	5	1.3.1		A	N	A

REMARKS

Three copies provided to the United States Army Corps of Engineers, Attn: Michael Johnson @ 21 Pine Street, Suite 121, Rockaway New Jersey 07866, one copy to United States Army Corps of Engineers, Attn: Saqib Khan and one copy retained for CAPE's project files.

Plan revised to incorporate government comments on the resubmittal of the plan under Modification 09.

I certify that the above submitted items have been reviewed in detail and are correct and in the strict conformance with the contract drawings and specifications except as otherwise stated.

Humberto Altamirano

NAME AND SIGNATURE OF CONTRACTOR

SECTION II - APPROVAL ACTION

ENCLOSURES RETURNED (List by item No.)	NAME, TITLE AND SIGNATURE OF APPROVING AUTHORITY	DATE
	MICHAEL S. JOHNSON Contracting Officer's Representative (COR)	21 April 2011

TRANSMITTAL OF SHOP DRAWINGS, EQUIPMENT DATA, MATERIAL SAMPLES, OR MANUFACTURER'S CERTIFICATES OF COMPLIANCE (Read instructions on the reverse side prior to initiating this form)	DATE 4/11/2011	TRANSMITTAL NO. 01451-14.2

SECTION I - REQUEST FOR APPROVAL OF THE FOLLOWING ITEMS (This section will be initiated by the contractor)

TO:	FROM:	CONTRACT NO.	CHECK ONE:
Environmental Residency US Army Corps of Engineers 214 State Highway 18 East Brunswick, NJ 08816	CAPE Environmental Management Inc. 180 Gordon Drive, Suite 105 Exton, PA 19341	W912DQ-05-D-0001 0005	☐ THIS IS A NEW TRANSMITTAL ☒ THIS IS A RESUBMITTAL OF TRANSMITTAL 01451-14.1

SPECIFICATION SEC. NO. (Cover only one section with each transmittal)	PROJECT TITLE AND LOCATION	CHECK ONE: THIS TRANSMITTAL IS
01451	01-Main Register Rockaway Wellfield Superfund Site, EM/WS Rockaway Borough, East Main/Wall Street, Morris County, NJ	NOR ☐ FIO ☒ GA ☐ DA ☐ CR

ITEM NO. a.	DESCRIPTION OF ITEM SUBMITTED (Type size, model number/etc.) b.	MFG OR CONTR. CAT., CURVE DRAWING OR BROCHURE NO. (See instruction no. 8) c.	NO. OF COPIES d.	CONTRACT REFERENCE DOCUMENT SPEC. PARA. NO. e.	CONTRACT REFERENCE DOCUMENT DRAWING SHEET NO. f.	FOR CONTRACTOR USE CODE g.	VARIATION (See Instruction No. 6) h.	FOR CE USE CODE i.
18.1	Work Plan GTS Construction REV 2	PRECON SUBMTL	5	1.3.1		A	N	

REMARKS

Three copies provided to the United States Army Corps of Engineers, Attn: Michael Johnson @ 21 Pine Street, Suite 121, Rockaway New Jersey 07866, one copy to United States Army Corps of Engineers, Attn: Saqib Khan and one copy retained for CAPE's project files.

Plan revised to incorporate government comments on the resubmittal of the plan under Modification 09.

I certify that the above submitted items have been reviewed in detail and are correct and in the strict conformance with the contract drawings and specifications except as otherwise stated.

Humberto Altamirano

NAME AND SIGNATURE OF CONTRACTOR

SECTION II - APPROVAL ACTION

ENCLOSURES RETURNED (List by item No.)	NAME, TITLE AND SIGNATURE OF APPROVING AUTHORITY	DATE

-REVISION 002-

WORK MANAGEMENT PLAN

ROCKAWAY WELLFIELD
SUPERFUND SITE
EAST MAIN/WALL STREET (EM/WS) PLUME
MORRIS COUNTY, NEW JERSEY

Contract No.: W912DQ-05-D-0001
Task Order No.: 0005

Prepared for:

U.S. ARMY CORPS OF ENGINEERS
KANSAS CITY DISTRICT
601 East 12th Street, Room 410
Kansas City, Missouri 64106-2896

Prepared by:

180 Gordon Drive, Suite 105
Exton, Pennsylvania 19341-1340

CAPE Project No.: 50001.005

April 2011

TABLE OF CONTENTS

Section ***Page***

LIST OF ABBREVIATIONS AND ACRONYMS iv

1.0 INTRODUCTION 1

1.1 Purpose 1
1.2 Site Location, Background and Containment Characterization 1
1.3 Personnel Responsibilities 4
1.4 Project Work Tasks 4
2.0 PROJECT ORGANIZATION AND RESPONSIBILITIES 6

2.1 Organization 6
2.2 Responsibilities 6
2.2.1 Project Manager 6
2.2.2 Site Superintendent 6
2.2.3 Contractor Quality Control Systems Manager 7
2.2.4 Quality Control Manager 7
2.2.5 Corporate Health and Safety Manager 8
2.2.6 Site Safety and Health Officer 8
2.2.7 Work Crew Personnel 9
3.0 PROJECT ACTIVITIES 10

3.1 Mobilization and Site Preparation 11
3.2 Surveying 11
3.3 Permitting 12
3.4 Extraction Well Installation 12
3.4.1 Monitoring Well Installation 13
3.5 Pipe Trenching and Installation 13
3.5.1 Handling and Storage 14
3.5.2 Excavation/Trenching 14
3.5.3 Dewatering 14
3.5.4 Installation of Trench Piping 14
3.5.5 Pipe Welding Procedures 15
3.5.6 Hydrostatic Testing of Pipelines 15
3.5.7 Well Vault Installation 16
3.6 Groundwater Treatment Facility Construction and Equipment Installation 16
3.7 Concrete Slab Construction 16
3.7.1 Formwork 16
3.7.2 Reinforcing Steel 16
3.7.3 Placement of Concrete 17
3.8 Pump House Demolition 17
3.9 GW-1 Bypass System 18
3.10 Zero Net Fill Excavation 18
3.11 Combined GW-1 Pump House and Groundwater Treatment Facility Construction 18
3.12 Equipment and Piping Installation 18

3.13 Electrical Installation 20
3.14 Facility Systems Installation 21
3.15 Treatment System Operations and Maintenance and Performance Testing 21
3.16 Site Restoration and Demobilization 22
4.0 STANDARD OPERATING PROCEDURES 23

4.1 Equipment 23
4.2 Emissions and Dust Control 23
4.3 Noise Control 24
4.4 Dewatering Plan 24
4.5 Traffic Control Plan 24
4.5.1 Roadway Entrances 24
4.5.2 Speed Limit 25
4.5.3 Flagging 25
5.0 PROJECT DELIVERABLES 26

5.1 Contractor Quality Control Plan 26
5.2 Accident Prevention Plan / Site Safety and Health Plan 26
5.3 Sample and Analysis Plan 26
5.4 Environmental Protection Plan (EPP) 26
5.5 Groundwater Treatment Facility 27
5.6 Operation and Maintenance Manuals 27
5.7 Remedial Action Report 27
6.0 SCHEDULE 28

7.0 POINTS OF CONTACT 29

8.0 REFERENCES 30

TABLE OF CONTENTS

FIGURES

Figure 1 Site Location Map
Figure 2 Organizational Chart
Figure 3 Project Schedule
Figure 4 Groundwater Remediation System Laydown Yard
Figure 5 Site Plan – Groundwater Treatment Facility

APPENDICES

A Environmental Protection Plan
B Sediment and Erosion Control Plan
C Temporary Site Facility Layout and Security Plan
D Transportation Plan
E Excavation, Trenching and Backfill Plan

LIST OF ABREVIATIONS AND ACRONYMS

ATK	Alliant Techsystems
bgs	below ground surface
C&D	Construction and Demolition
CAPE	CAPE Environmental Management Inc
CDM	Camp Dresser & McKee, Inc.
CHSM	Corporate Health and Safety Manager
CIH	certified industrial hygienist
CMU	concrete masonry unit
CO	Contracting Officer
COR	Contracting Officer's Representative
CPVC	chlorinated polyvinyl chloride
CQC	Contractor Quality Control
CQCP	Contractor Quality Control Plan
CQCSM	Contractor Quality Control Systems Manager
CRA	Conestoga-Rovers, Associates
dBA	decibels, scale A
DLUR	Division of Land Use Regulation
DQCR	Daily Quality Control Report
EM/WS	East Main / Wall Street
EPA	U.S. Environmental Protection Agency
EPP	Environmental Protection Plan
EST	Eastern Standard Time
FHA	Flood Hazard Area
FSP	Field Sampling Plan
GTS	groundwater treatment system
HDPE	high density polyethylene
HDR/OBG	HDR/O'Brien and Gere Joint Venture
HVAC	heating, ventilation and air conditioning
JCP&L	Jersey Central Power and Light
K&K	Klockner & Klockner
M&E	Morristown and Erie
mph	miles per hour
NJDEP	New Jersey Department of Environmental Protection
NJPDES BGR	New Jersey Pollution Discharge Elimination System Category BGR
NJ DOT	New Jersey Department of Transportation
O&M	Operation and Maintenance
PCE	perchloroethylene (tetrachloroethylene)
PDI	Pre-Design Investigation Report
PG	Professional Geologist
PM	Project Manager
PLC	Programmable Logic Controller
psi	pounds per square inch
PVC	polyvinyl chloride
QA	Quality Assurance
QAPP	Quality Assurance Protection Plan

QC	Quality Control
RA	Remedial Action
RCRA	Resource Conservation and Recovery Act
RD	Remedial Design
RI/FS	remedial investigation/feasibility study
ROD	Record of Decision
S&H	Safety and Health
SAP	Sampling and Analysis Plan
SSHO	Site Safety and Health Officer
SSHP	Site Safety and Health Plan
TCE	Trichloroethylene
TO	Task Order
USACE	U.S. Army Corps of Engineers
VOC	volatile organic compounds
WMP	Work Management Plan

1.0 INTRODUCTION

1.1 Purpose

The United States Army Corps of Engineers, Kansas City District (USACE) has contracted CAPE Environmental Management Inc (CAPE) to perform the installation of the remedial systems for the Rockaway Borough Well Field Superfund Site East Main/Wall St (EM/WS), Morris County, New Jersey. This system installation will be conducted under Contract No. W912DQ-05-D-0001, Task Order (TO) No. 005.

This document constitutes the Work Management Plan (WMP) for the Groundwater Treatment Systems (GTSs) installation and is intended to meet/exceed the requirements set forth in the Contract Specifications and Drawings for the required plans, i.e., Environmental Protection Plan (EPP) (includes Transportation Plan); Temporary Site Facilities Layout/Security Plan; Excavation, Trenching, Compaction and Grading Plan; and Soil Erosion and Sediment Control Plan.

1.2 Site Location, Background and Containment Characterization

The Rockaway Borough Well Field Site is located in the north central region of New Jersey and encompasses approximately 2.1 square miles (Figure 1). Rockaway Borough obtains its potable water supply from groundwater using three supply wells (GW-1, GW-5, and GW-6). The municipal well field serves approximately 10,000 residents of Rockaway Borough and its surrounding communities at a rate of approximately 1.2 million gallons per day.

In 1981, contamination by volatile organic compounds (VOCs) was discovered in the municipal water supply and a granular activated carbon treatment system was installed. In 1993, an air stripping system was added in advance of the carbon treatment system to improve system operation and reduce operating costs.

In 1985, the New Jersey Department of Environmental Protection (NJDEP) initiated a Phase I Remedial Investigation/Feasibility Study (RI/FS) (SAIC 1986). The Phase I report concluded that contamination of the municipal water supply was emanating from multiple source areas within the Borough. The source areas identified included the following properties:

- K&K, located at Stickle Avenue and Elm Street
- Roned Realty Industrial Area, located at 114 Beech Street
- Stapling Machine Company, located at 41 Pine Street
- Pettit Paints, located at Pine Street and Stickle Avenue.

Based on these findings, the United States Environmental Protection Agency (EPA) initiated a Phase II RI/FS (ICF 1991a and 1991b) to identify the contaminant sources, further delineate the full extent of contamination, and evaluate remedial action (RA) alternatives to address the sources of contamination. Some of the major findings and conclusions of Phase II RI/FS were as follows:

- Groundwater in the northeast portion of Rockaway Borough was contaminated with VOCs, primarily Trichloroethene (TCE) and Tetrachloroethene (PCE)
- A PCE groundwater contamination plume originating in the EM/WS Street area was impacting municipal Wells Nos. 1 and 5 (GW-1 and GW-5). However, the source was not identified
- Groundwater contamination from TCE was emanating from the Klockner & Klockner (K&K) property and impacting the Rockaway Borough Well Field, specifically municipal Well No. 6 (GW-6)
- Groundwater contamination from VOCs was emanating from the Roned Realty Industrial Area
- Groundwater beneath Pettit Paints was contaminated with VOCs, primarily xylene, toluene and ethyl benzene
- A groundwater divide was located east of Stickle Avenue in the northeast portion of Rockaway Borough.

These studies led to a 1986 Record of Decision (ROD) for continued operation and maintenance (O&M) of the Rockaway Borough water treatment system. A second ROD was issued in 1991, which called for groundwater extraction of plumes emanating from the K&K and the EM/WS areas.

In 1994, EPA and Thiokol entered into a Consent Decree whereby Thiokol agreed to, among other things, conduct the Remedial Design (RD) for the Rockaway Borough Well Field Site. In the RD, Thiokol was required to address both the PCE plume emanating from the EM/WS area and the TCE plume emanating from the K&K site, but only to remediate the K&K plume via a groundwater remedy. Thiokol was not required to implement the RA for the PCE plume or for any sources of contamination throughout the Borough, emanating from the EM/WS area.

In 2001, Alliant Techsystems (ATK) replaced Thiokol as the Responsible Party for this project.

In November 2002, an Intermediate (65%) Design Report was prepared and submitted for the EM/WS Plume. In July 2003, the Borough of Rockaway decided against granting access to the USEPA for constructing the EM/WS Plume treatment building in the Borough of Rockaway Public Works Yard.

In May 2004, the Borough of Rockaway wrote that they are unable to allow for the construction of the EM/WS treatment building in their public works yard, but was receptive to other locations. In September 2004, two potential locations were identified on land owned by the Borough. In November 2004, the Borough of Rockaway passed a resolution that authorized the Borough of Rockaway to enter into an access agreement with the EPA to construct the EM/WS treatment building in Rockaway River Park along Jackson Avenue.

On July 12, 2005, a technical meeting was held between the EPA, USACE, and their subcontractors along with Conestoga-Rovers & Associates (CRA). The purpose of the

meeting was to discuss the changes to the EM/WS RD with respect to the location of the EM/WS Plume treatment building, the alignment of the new forcemain route, and preparation of project specifications and drawings. Based on the results of the July 12, 2005 meeting, the Revised Intermediate (65%) Design Report was prepared.

In August 2005, a Revised Intermediate (65%) Design Report was submitted that presented updated drawings and specifications to reflect the new EM/WS Plume groundwater treatment building and forcemain route.

On September 28, 2005, CRA, on behalf of ATK, submitted the Pre-Final (95%) Design Report to the EPA. The Pre-Final (95%) Design Report presented updated drawings and specifications, along with an updated cost estimate.

On November 9, 2005, the EPA submitted comments to ATK on the Pre-Final (95%) Design Report. The Final (100%) Design Report was submitted in February 2006.

CAPE was originally tasked with the RA, through its pre-placed RA contract W912DQ-05-D-0001, TO 005. CAPE's initial scope included installing extraction wells EW-5, EW-6 and EW-7 and conducting an aquifer pumping test. These wells were installed in the summer of 2007 in accordance with the design documents developed by CAPE's design subcontractor, CDM, in accordance with the preliminary design developed by Conestoga-Rovers, Associates (CRA). At EPA's request a piezometer, EW-7A was also installed in the summer of 2007 to better understand the hydrogeologic conditions during the pumping tests due to concerns about the possible presence of a confining layer in the EW-7 area noted during the pilot hole boring program. CDM conducted step drawdown tests to evaluate well performance and constant rate pumping tests to estimate/understand the effects of long-term pumping and influence of the extraction wells on the aquifer. During the performance of these tests and the subsequent reporting of results, CAPE and CDM presented a report that identified data gaps that required resolution before the remedial action could proceed. In the spring of 2008, EPA concurred that the data gaps required resolution, so an RD contractor was tasked to perform additional groundwater investigation to further refine the government's understanding of the hydrogeologic conditions.

From April-June 2009, EPA's RD contractor, HDR/O'Brien and Gere (OBG) Joint Venture, conducted a Pre-Design Investigation (PDI) as part of Operable Unit (OU) 2, which included the installation of monitoring wells and piezometers throughout the EM/WS plume and completion of an aquifer (pumping) test to determine whether the current extent of contamination had been defined and whether the source(s) had been adequately characterized, which ultimately effects the RA at the site (groundwater extraction and treatment).

From January-March 2010, HDR/OBG and Lockheed Martin Scientific Response Engineering & Analytical Services (SERAS) assisted EPA in the additional assessment of the groundwater contaminant plume. Work consisted of the installation and sampling of 11 overburden piezometers located outside the source area to better define both the horizontal and vertical extent of the groundwater plume. The results of the PDI provided additional information, which was used to update the conceptual site model; relocate two

of the existing extraction locations (EW-5 and EW-7); and add EW-9 and EW-10, since the understanding of the plume location had changed. The Revision 0 PDI Report was completed in April 2010.

In October 2010, CAPE's TO was modified to include the revised RA scope involving the relocation of EW-5 and EW-7 (the new well will be called EW-8) along with the installation of EW-9 and EW-10. Also included in the modified scope of work, CAPE was tasked to construct a combined GTS / GW-1 pump house building. The existing pump house for GW-1 (one of Rockaway Borough's public supply wells) requires demolition and construction to bring the combined building into building and fire code compliance. Under this revised scope, CAPE will install four new extraction wells, install vaults and a force main to convey extracted groundwater to a GTS, construct the GTS, demolish and construct the GW-1 pump house, and perform system start up and operational checks. Once this scope is complete, CAPE will turn O&M of the GTS over to another long term response action contractor.

1.3 Personnel Responsibilities

All onsite personnel are responsible for complying with the requirements of this WMP. Site personnel will have training in the prevention and control of pollution and habitat disruption. CAPE's training program includes initial site-specific safety training, as well as morning tailgate meetings with topics specific to the planned activities for the day.

The CAPE Project Manager (PM), David Bettendorf; Site Superintendent, Charlie McNeil; Contractor Quality Control (CQC) Systems Manager (CQCSM), Humberto Altamirano; and the Site Safety and Health (S&H) Officer (SSHO), Robert Landle; will be responsible for implementing the plans and ensuring that all work requirements are enforced. CAPE's PM will coordinate and be responsible for timely communication between CAPE and the USACE Contracting Officer's Representative (COR). The Site Superintendent will be the onsite representative responsible for the daily supervision and compliance with this plan. In addition, the Site Superintendent is responsible for ensuring that all hazardous wastes removed from the site are properly manifested. The CQCSM is responsible for ensuring that the quality of craftsmanship and construction exhibited by field personnel is in accordance with the contract drawings and specifications. The SSHO is responsible for training CAPE's environmental protection personnel and will be giving the initial site-specific safety training and the morning tailgate safety meetings.

1.4 Project Work Tasks

For the purposes of this WMP, CAPE has organized project activities into the following primary field project work tasks.

- Mobilization and Site Preparation
  - Site Utility Location and Surveying
  - Installation of Soil Erosion Controls
  - Clearing and Grubbing
  - Temporary Site Facility Set-up

- Decontamination Pad and Material Storage Set-up

- Permitting
- Well Installation
  - Extraction Well Installation and Development
  - Step Draw-down and Pump Testing
- Pump House Demolition
- GW-1 Bypass System
- Zero Net Fill Excavation
- Groundwater Treatment Facility Construction
  - Slab Construction
  - Facility Construction (including a new Pump House)
  - Equipment and Piping Installation
  - Electrical Installation
  - Facility Systems Installation
- Forcemain Pipe Trenching and Installation
  - Handling and Storage
  - Excavation/Trenching
  - Dewatering
  - Installation of Piping
  - Pipe Welding
  - Leak Testing
  - Well Vault Installation
- Treatment System Performance Testing
  - Baseline Groundwater Monitoring
  - Start-up Testing
  - 48-Hour Performance Test
- Domestic Water Service Connection
- Site Restoration and Demobilization
  - Final Grading
  - Fence Installation
  - Seed and Mulch
  - Remove Perimeter Soil Erosion Controls
  - Removal of Temporary Site Facilities
- On-Site Support to COR.

In an effort to complete work on-schedule and within established budgets, multiple operations (e.g., well installation and treatment facility construction) will be occurring at the same time.

2.0 PROJECT ORGANIZATION AND RESPONSIBILITIES

2.1 Organization

The following subsections briefly describe the responsibilities of the personnel assigned to this project. All onsite personnel are responsible for complying with the requirements of this WMP, Site S&H Plan (SSHP), CQC Plan (CQCP), and the Sample and Analysis Plan (SAP). The CAPE PM and Site Superintendent will be responsible for implementing the plans and ensuring that all work requirements are enforced. The proposed project organization chart is provided in Figure 2.

2.2 Responsibilities

2.2.1 Project Manager

The CAPE PM, David Bettendorf, PG, will be responsible for overall direction, implementation, and enforcement of TO requirements. Responsibilities include:

- Ensuring that the project is being performed in a manner consistent with the CAPE Corporate Health and Safety Program, the Scope of Work, and the Base Specification Requirements
- Ensuring that all required plans (i.e., SSHP, CQCP, SAP, EPP, and WMP) are prepared, submitted in a timely manner, and approved by the USACE
- Providing project personnel with information related to health and safety matters and other critical issues related to the project
- Monitoring compliance with the TO requirements by CAPE and subcontractor personnel
- Ensuring that adequate resources are provided to the health and safety staff so that they may carry out their duties
- Maintaining communication with the USACE authorized representative.

The PM will also have the authority to take the following actions:

- Determining personnel assignments on this project
- Stopping site activities if an imminently dangerous situation exists.

Emergency situations will be reviewed immediately with the Site Superintendent, SSHO, Corporate Health and Safety Manager (CHSM), and the USACE authorized representative.

2.2.2 Site Superintendent

The Site Superintendent, Charlie McNeil, will direct daily implementation and enforcement of the TO requirements during site activities. Other responsibilities include:

- Ensuring that site activities are scheduled and executed with adequate personnel and equipment resources to perform the project safely
- Ensuring that adequate communication between field personnel and emergency response personnel is available
- Ensuring that site personnel are trained in accordance with Section 10.0 of the SSHP.

The Site Superintendent will have the authority to stop site activities if an imminently dangerous situation exists. The emergency situation will be immediately reviewed with the PM and the CHSM.

The Site Superintendent is CAPE's appointed manager of the daily project site activities. The Site Superintendent is responsible for the general oversight of the progress of onsite activities, including the management of all onsite field personnel, and for implementing actions to ensure compliance with all Work Plans. The Site Superintendent is responsible for coordinating and providing the necessary labor, equipment, and materials for material handling activities as required by the plan.

2.2.3 Contractor Quality Control Systems Manager

CAPE's CQCSM, Humberto Altamirano, will be responsible for the overall management of the CQC System and for implementing the CQCP. He has the authority to act independently in all quality control (QC) matters. The CQCSM reports directly to the CAPE Quality Assurance (QA)/QC Director. The CQCSM may have assistance from a QC Technician. The CQCSM's responsibilities are outlined below.

- Managing the performance of all on- and offsite inspections and testing
- Evaluating the results of the inspections and testing
- Notifying the CAPE PM of acceptance or rejection of the work.
- Managing documentation of all inspections and testing and notifications to site project management through Daily QC Reports (DQCRs)
- Reviewing all required submittals relating to QC, and forwarding all submittals to the USACE for review and approval.

The CQCSM will have the authority to suspend work for which the standards established by the specifications for performance of the work are not being met or maintained. Should modifications or revisions to the specifications relating to QC be required, the CQCSM will prepare a request for modification or revision, and submit it to the USACE Authorized Representative. The CQCSM will ensure that approval of the modification or revision is received prior to allowing the modifications or revision to occur in the field.

2.2.4 Quality Control Manager

In accordance with the CAPE QA Program, the QC Manager, Henry Vaca, will supervise the QC activities of the CQCSM. In addition, the QC Manager will serve as a technical

resource to the CQCSM. The CQCP and all project QC records and activities are subject to review by the QC Manager.

2.2.5 Corporate Health and Safety Manager

The CHSM, Glen Mayekawa, is a Certified Industrial Hygienist (CIH) with experience in hazardous waste site operations. The CHSM will have the following responsibilities:

- Interfacing with the PM about project execution, health and safety-related, and QC issues
- Approving the SSHP and any amendments
- Approving revised or new S&H protocols for site activities
- Monitoring compliance with the SSHP
- Ensuring that all CAPE personnel and subcontractors designated to work on the TO are qualified according to CAPE medial surveillance and training and USACE requirements
- Determining and implementing personnel disciplinary actions for safety violations
- Approving the appointment of the SSHO and any replacement SSHO's.

The CHSM will have the authority to take the following actions:

- Stopping site activities if an imminently dangerous situation exists. The emergency situation will be immediately reviewed with the PM, Site Superintendent/ SSHO
- Directing personnel to change a work practice if it is determined to be hazardous to the health and safety of site personnel
- Removing personnel from the project if their actions endanger their health and safety, or the health and safety of co-workers.

2.2.6 Site Safety and Health Officer

The SSHO, Robert Landle, will serve as an advisor to the PM in matters regarding health and safety. The SSHO for this project will be primarily responsible for the technical and administrative functions relative to health and safety during site activities. The SSHO will have the following responsibilities:

- Ensuring that all site activities are performed in a manner consistent with the SSHP and the CAPE Corporate Health and Safety Program
- Interfacing with the CHSM about onsite implementation of the SSHP
- Directing daily health and safety activities on site
- Reporting all incidents, accidents, and near-misses to the CAPE PM, CHSM, and the USACE authorized representative

- Maintaining health and safety equipment on site
- Inspecting ongoing activities and reporting any health and safety deficiencies to the CHSM
- Accompanying or maintaining communication with each work crew
- Performing site monitoring to ensure that site personnel are adequately protected
- Conduct initial site-specific safety training and regular safety briefing for all site personnel.

The SSHO will have the authority to take the following actions:

- Stopping site activities if an imminently dangerous situation exists. The emergency situation will be immediately reviewed with the PM, and CHSM
- Directing personnel to change a work practice if it is determined to be hazardous to the health and safety of site personnel
- Temporarily suspending an individual from field activities for an infraction of the SSHP, pending discussion with the CHSM.

The SSHO will report to the CHSM about health and safety related issues.

2.2.7 Work Crew Personnel

The work crew will have the following responsibilities:

- Immediately reporting any unsafe or potentially hazardous conditions to the SSHO/Site Superintendent
- Immediately reporting all incidents; accidents; and near misses, no matter how minor they may seem, to the SSHO/Site Superintendent
- Maintaining knowledge of the information, instructions, and emergency response procedures contained in the SSHP, and the work plan
- Complying with requirements and procedures set forth in the SSHP, and other project documents and with any amendments.

3.0 PROJECT ACTIVITIES

The objectives of this project are to install a GTS to treat the plume of contamination on site, which will include the installation of four extraction wells and piping connection to the groundwater treatment facility. A breakdown of the specific work tasks required to achieve these goals and a description of the work is provided below. The sequence of activities is presented in the project schedule (Figure 3).

- Mobilization and Site Preparation
  - Site Utility Location and Surveying
  - Installation of Soil Erosion Controls
  - Clearing and Grubbing
  - Temporary Site Facility Set-up
  - Decontamination Pad and Material Storage Set-up
- Permitting
- Well Installation
  - Extraction Well Installation and Development
  - Step Draw-down and Pump Testing
- Pump House Demolition
- GW-1 Bypass System
- Zero Net Fill Excavation
- Groundwater Treatment Facility Construction
  - Slab Construction
  - Facility Construction (including a new Pump House)
  - Equipment and Piping Installation
  - Electrical Installation
  - Facility Systems Installation
- Forcemain Pipe Trenching and Installation
  - Handling and Storage
  - Excavation/Trenching
  - Dewatering
  - Installation of Piping
  - Pipe Welding
  - Leak Testing
  - Well Vault Installation
- Treatment System Performance Testing
  - Baseline Groundwater Monitoring
  - Start-up Testing
  - 48-Hour Performance Test
- Domestic Water Service Connection
- Site Restoration and Demobilization
  - Final Grading
  - Fence Installation
  - Seed and Mulch
  - Remove Perimeter Soil Erosion Controls

- Removal of Temporary Site Facilities

▲ Onsite Support to COR.

Specific information regarding several of the individual work tasks can be located in one or more of the prepared plans (i.e., SSHP, CQCP, or SAP) and is indicated in the work task descriptions below. The overriding document on all work tasks is the CQCP. This document contains information regarding the procedures for inspection, testing, and correction of deficiencies. All operations will comply with the requirements of the contract plans and specifications with respect to workmanship, construction, quality of materials, finish, functional performance, and accuracy of data.

3.1 Mobilization and Site Preparation

This work task will include the installation of all temporary construction facilities; fencing; clearing and grubbing; road stabilization; installation of stone construction entrance, and sediment and erosion control devices; delineations of the work areas; and posting of signage. Refer to the EPP and the SSHP for information regarding the above. All work will be performed in accordance with the contract documents.

CAPE will mobilize to the site after the submitted plans have been approved by the USACE. After the plans have been approved CAPE will mobilize a Site Superintendent, CQCSM, SSHO, operators, and laborers. Before beginning any demolition or excavation work, CAPE shall carefully survey the existing site and take all necessary precautions to ensure against damage to existing structures. CAPE will protect existing utilities against damage during excavation and demolition operations.

Proper utility clearances will be obtained prior to beginning any ground-intrusive activities. When utility lines are encountered that are not indicated on the drawings, the Contracting Officer (CO) or their designated representative shall be notified immediately. Any shut-off of utilities will be coordinated with the COR. Refer to the Excavation, Trenching and Backfill Plan for specific information regarding the clearance of utilities.

Staging areas will be established for excavated materials. Refer to the Waste Management portion of the EPP for specifics regarding the staging and disposal of contaminated soils and groundwater.

3.2 Surveying

Prior to the initiation of any work on the site, verification of existing site conditions, contours, and structures within the construction limits will occur through the use of a qualified and Registered Land Surveyor from the State of New Jersey. The exact location of all work control points will be established and all work will be referenced from them. As-built drawings will reflect the survey data and will include final topography, drainage, vegetation, gate and fence locations, tree lines, and any other areas which have been disturbed. The exact location of all site features to be constructed will be properly located by instrumentation. These features include, but are not limited to: GTS Facility, Groundwater Extraction and monitoring well locations, discharge location of treated water, influent and effluent piping locations, access roads and paving, and fence lines.

All features will be identified on as-built drawings. All survey work will be performed in accordance with the contract documents and the approved CQCP.

3.3 Permitting

CAPE will coordinate with NJDEP, the EPA, and the Borough of Rockaway, as well as the Morris Country Soil Conservation District and Morristown & Erie (M&E) Railway, for project permit requirements. Several permit applications were started and/or completed in 2007 and 2008, whereas others are still outstanding. The Division of Land Use Regulation (DLUR) Flood Hazard Area Permit is a new requirement that applies to the project because the GTS building will be located within a floodplain. This permit carries a Zero Net Fill requirement in an effort to minimize the impacts of development on flooding. In order to compensate for loss of flood volume due to construction within a floodplain, additional flood volume must be created elsewhere. The current plan is to excavate soils from the Gee property owned by Rockaway Borough to provide additional storage to offset the displacement of flood storage at the GTS site, which is approximately 80 cubic yards.

Permit	**Regulatory Citation**
Safe Drinking Water Act (SDWA) Permit Equivalent	US Code Title 42 Chapter 6A Section 300f
DLUR Flood Hazard Area (FHA) Permit Equivalent	NJAC 7:13
Rockaway Construction Permit Application	Borough of Rockaway Code Part II Chapter 115 Section 115-4
NJPDES Discharge to Surface Water (DSW) Permit (or BGR Permit)	NJAC 7:14A-1
NJDEP Air Pollution Control (APC) Pre-Con Control and Permit	NJAC 7:27-8.2(C) 1 through (C) 21
NJDEP Treatment Works Approvals (TWA) Permit	NJAC 7:14A
Soil Erosion and Sediment Control Plan	State of New Jersey Soil Erosion and Sediment Control Act Chapter 251
Rockaway Borough Road Opening Permit	Borough of Rockaway Code Part II Chapter 217 Article III Section 217-10
M&E Railroad	Railroad Specific
NJDEP Water Allocation Permit	NJAC 7:19
NJDEP Short-Term Water Use Permit By Rule	NJAC 7:19

3.4 Extraction Well Installation

CAPE will locate, drill, install, complete, and develop four extraction wells (EW-5a, EW-8, EW-9, and EW-10). EW-6, which was installed previously in 2007, can be used as an extraction location. Test borings will be completed in the vicinity of each extraction well to obtain soil samples, perform geologic logging, and determine the proper screen size for the wells. Test borings and extraction wells will be advanced using sonic drilling methods. The following bullets summarize the drilling scope of services:

- Four 6-inch-diameter groundwater extraction wells (10-inch nominal diameter boreholes) will be installed with sonic drilling methods developed, and yield tested (step test)
- Each borehole will be sampled continuously using sonic drilling from the ground surface to terminal depth which is assumed to be 90 feet
- Geotechnical samples will be collected to design the filter pack and screen slot size based upon sieve analyses
- Following well design and acceptance of design by the government, the materials will be procured and the extraction well will be constructed.

All well installations will be conducted in accordance with the contract documents and the approved well screen designs.

Decontamination of the drilling equipment will be performed at a central decontamination station after the completion of one well and prior to installation of another. All drilling equipment will be decontaminated prior to use on-site. Water from decontamination will be stored in closed containers on-site and discharged under a New Jersey Pollution Discharge Elimination System Category BGR (NJPDES BGR) permit or transported off-site to a permitted disposal facility. Drill cuttings will be containerized in roll-off boxes and or 55 gallon drums, staged on-site, sampled and disposed of in accordance with all Federal, State and local regulations.

3.4.1 Monitoring Well Installation

One piezometer (EW-7A) was installed in 2007 in accordance with the contract documents, as well as NJDEP and EPA Region II guidelines, EPA 670/9-75-001. Additional monitoring wells are not planned in the revised scope (i.e., Modification 09).

3.5 Pipe Trenching and Installation

The trench design, submitted in 2007 before completion of the PDI by HDR/OBG, will be revised to include the recommendations of the PDI report which involves the installation of new wells EW-5A, EW-8, EW-9, and EW-10. Pipeline installation work will coincide or follow shortly after extraction well installation as depicted in the project schedule, Figure 3. The trenching limits will be laid out via land survey. CAPE will use geophysical methods and NJ One Call to locate utilities before any digging occurs. Additional coordination and precautions will be made to protect overhead power lines which will involves coordination with Jersey Central Power and Light (JCP&L) to sleeve secondaries along the trench route. Trenching, backfilling, and compaction methods will comply with the Excavation, Trenching, and Backfill Plan in Appendix E of this plan. Pipeline installation procedures for extraction wells to the Groundwater Treatment Facility will be performed as detailed in the following sections and in accordance with Sections 02300 and 15051 of the Contract Specifications.

3.5.1 Handling and Storage

Each load of pipe delivered to the jobsite will be inspected in accordance with the CQCP. Any damages such as cuts, abrasions, scrapes, gouges, tears, and punctures will be noted on the Bill of Lading, and the damaged items will not be accepted. Quantities will be checked against the shipping list.

Bulk loads requiring the use of unloading equipment will be unloaded with a fork lift, or other suitable piece of equipment with the appropriate forklift attachment, and transferred to the staging area within the groundwater remediation system laydown yard (Figure 4). Pipe will be placed on wooden dunnage and kept off of the ground. Smaller items (e.g., pipe fittings, gauges) will be staged in this area as well.

3.5.2 Excavation/Trenching

The approximate location of the extraction well pipeline trenches and excavation trench details are shown on the construction drawings. Excavated material will be transported to the laydown area. Refer to the Excavation, Trenching and Backfill Plan in Appendix E for details.

3.5.3 Dewatering

Pipe trenches will be kept free from water during pipe laying, jointing, and until sufficient backfill has been placed to prevent flotation of the pipe. In the event that dewatering of the trench is required (due to rain events), sump pumps will be used to remove water from the trench bottom. The trench water will be considered “storm water” and will be pumped through a micron filter from the trench to the nearest storm drain inlet. The storm water in the trench will be allowed to settle out suspended solids to minimize solids loading on the micron filter.

3.5.4 Installation of Trench Piping

The pipe string will be placed in the trench using ropes or by hand. The pipe will be placed on the bottom of the excavated trench. After placement into the trench the pipe and fittings will be inspected to ensure that there are no damaged materials. The pipe bedding material will be placed around the pipe in a manner as not to disturb the pipe. The material will be placed using shovel slicing to remove void space. The material placed to the sides of the pipe from the bedding to the center line is intended to help the pipe support vertical loads. The initial backfill will be placed to a height of 6 inches over the crown of the pipe. The backfill will consist of offsite material meeting the requirements of Specification 02300.

All trench piping will be of double containment high density polyethylene (HDPE) with heat welded joints. The construction of the forcemains will be in accordance with local requirements and have a minimum of 4 feet of cover soil to provide frost protection. Reductions and increases in pipe diameter will be made to allow for pressure differentials based on distances from the treatment facility and will be as shown on the contract

drawings. The wells will be connected to the treatment plant via common headers as shown in the drawings.

3.5.5 Pipe Welding Procedures

The principle method to be used for joining the polyethylene pipe is by heat fusion of the pipe butt ends (i.e., the butt fusion method). This is the most widely used method for joining individual lengths of polyethylene pipe. This technique, which prevents the need for specially modified pipe ends or couplings, produces a permanent, economical, and flow-efficient connection. Field-site butt fusions will be made by trained personnel using butt fusion machines that secure and precisely align the pipe ends for the fusion process.

Each component that is to be fused will be held in position so that it will not move unless it is moved by the clamping device on the butt fusion machine. Next, the pipe ends will be faced to establish clean, parallel mating surfaces. Facing will be continued until a minimal distance exists between the fixed and movable jaws of the machine and the facer is locked firmly and squarely between the jaws. This procedure provides for a perfectly square face, perpendicular to the pipe centerline on each pipe end, and with no detectable gap. Then, the operator will ensure that the pipe profiles are rounded and aligned with each other to minimize mismatch (high-low) of the pipe walls. Heat will then be applied to the ends of the pipe to the pipe manufacturer's recommended temperature, interface pressure, and time duration allowing a molten "bead" of material to form at the pipe ends being joined. After the pipe ends have been heated for the proper time and to the proper temperature, the heater tool is removed and the molten pipe ends are brought together with sufficient pressure to properly mix the pipe materials and form a homogeneous joint. The molten joint will then be held immobile under pressure until cooled adequately according to the proper cooling times established by the pipe manufacturer for the corresponding pipe diameter joint.

Other joining procedures may be required such as mechanical or threaded connections. If these connections are necessary they will be made according to the manufacturer's instructions.

No connection will be made where joint surfaces and joint materials have been soiled by earth in handling until such surfaces are thoroughly cleaned by washing and wiping. As the work progresses, the interior of all pipes will be kept clean. After each line of pipe has been laid, it will be carefully inspected and all earth, trash, rags, and other foreign matter removed from the interior.

3.5.6 Hydrostatic Testing of Pipelines

Hydrostatic testing of HDPE pipelines will be completed in accordance with the Contract Specifications, specifically Section 15200 of the Trench Package.

Hydrostatic testing of GTS and Pump House piping will be completed in accordance with the Specification 15051 of the GTS Package.

3.5.7 Well Vault Installation

Extraction wellheads will be protected from weather and traffic by installing steel and concrete well vaults over each well. The covers will be single leaf spring assisted access doors. They will rest on open bottom pre-cast concrete vault boxes set flush to surface elevation. Vault covers for all wells will be rated for water loading. Well vault and cover details are shown in the contract drawings.

3.6 Groundwater Treatment Facility Construction and Equipment Installation

Groundwater Treatment Facility will be a single story, concrete block style facility to be located at the intersection of Ogden Avenue and Jackson Avenue near Lot 18 Block 14 (Figure 5), which is also known as 122 Jackson Avenue.

3.7 Concrete Slab Construction

The construction of the concrete foundation will be poured with a monolithic curb for spill containment purposes designed to hold 110 percent of the volume of the largest tank in the treatment system. The slab will be constructed in accordance with the contract documents as described in the sections below.

A capillary water barrier consisting of 6 inches of Type S2 fill will be installed under concrete floors and areaway slabs on grade. The material will be placed directly on top of the sub-grade and compacted with a vibratory plate tamper (minimum of two passes). A vapor barrier will be placed on the material prior to concrete placement in an effort to maintain barrier permeability.

3.7.1 Formwork

Forms will be free from roughness and imperfections, watertight, and will be braced and tied to prevent motion when concrete is placed. Wooden spreaders and wire ties will not be used. Metal ties or anchorages, which are necessary within the forms, will be constructed so that the metal work can be removed for a depth of at least 1.5 inches from the concrete surface with damage. Forms will be cleaned and treated with a form release agent or other approved material before using them. All exposed edges of the finished concrete will be chamfered 0.75 inches. Forms will not be removed until the concrete has attained the strength of at least 30 percent of the specified design strength nor before reaching approximately "100 day-degrees" of moist curing (whichever is the longest). All formwork will adhere to Section 03301 Paragraphs 2.05 and 3.08 of the Contract Specifications.

3.7.2 Reinforcing Steel

Reinforcing steel will be stored off of the ground, protected from moisture and kept free from rust, mud, dirt, grease, oil, ice, or other contaminants. Proper clearances will be maintained between the steel and the exterior edge of concrete and exposed earth. All tie-wire will be 16-guage or heavier black annealed wire. Lap splices will be in accordance with Section 03301 Paragraph 3.02 of the Contract Specifications.

If it becomes necessary to modify the steel reinforcement (e.g., length, height), the steel is cut using cold method cutting techniques. Hot-works (torch cutting or welding) of the steel will not be permitted. All reinforcing steel will adhere to Section 03301 of the Contract Specifications.

3.7.3 Placement of Concrete

Prior to placement, all embedded items will be checked for proper clearances. Concrete will meet the strength requirements of 4,000 pounds per square inch (psi) at 28 days. Nominal maximum-size coarse aggregate will conform to ASTM C33 Size 57 for the construction of the slab. Concrete will have a 3-5-inch slump and air content will be 3.5-5 percent. The consolidation of the material during placement will be achieved through the use of internal vibrating equipment. Placement of the concrete with pump truck may be utilized during the construction of the slab. The concrete will conform to the same specifications mentioned above, but the maximum allowed slump will be 6 inches. All utility stub-ups will be capped during concrete pouring operations to prevent clogging. All concrete work, inspections, testing, and submittals will be in accordance with contract specifications for concrete construction and Section 03301 of the contract specifications.

During periods of cold weather, concrete will be batched, delivered, placed, cured and protected in compliance with the recommendations of ACI 306R. During periods of hot weather, concrete will be batched, delivered, placed, cured, and protected in compliance with the recommendations of ACI 305R. The temperature of the concrete will be such that it will cause no difficulties from loss of slump, flash set, or cold joints. Concrete will immediately be covered with sheet curing material during periods of hot weather.

In accordance with Contract Specification 03511 Paragraph 3.08., for sidewalks and curbs specifically, concrete placement will be discontinued when the air temperature reaches 40°F and is falling. Concrete placement may begin when the air temperature reaches 35°F and is rising. Covering and other means shall be provided for maintaining the concrete at a temperature of at least 50°F for not less than 72 hours after placing and at a temperature above freezing for the remainder of the curing period. During periods of warm weather (for sidewalks and curbs), the temperature of the concrete as placed will not exceed 85°F except where an approved retarder is used. The mixing water and/or aggregates will be cooled, if necessary, to maintain a satisfactory placing temperature. In no case will the placing temperature exceed 95°F.

3.8 <u>Pump House Demolition</u>

Rockaway Borough's existing Pump House building will be demolished as part of the scope of work. The municipal well controls are expected to be in good condition and should not require replacement during demolition and subsequent reconstruction of the pump house building, which will be co-located with the Ground Water Treatment Plant. If necessary, the Borough's pump house instrumentation and control system and vertical turbine pump may be replaced, including associated valves and instruments. The instrumentation and controls allowance includes a SCADA and control system for primary PLC panel (no remote panel), a level devise and 6-inch flowmeter, and a 480V/3

phase variable frequency drive (VFD) motor. Controls will be similar to the extraction well control system.

3.9 GW-1 Bypass System

One of Rockaway Borough's public supply wells, GW-1 is in the pump house scheduled for demolition located at 122 Jackson Avenue. To maintain water supply to Rockaway Borough, CAPE will erect a temporary bypass system that will consist of removing the existing pump and mechanical/electrical connections and installing a temporary pumping system. A trench will be cut to the well head area where a pitless adapter will be installed on GW-1. A 7.5hp submersible pump will be installed along with completion of the required mechanical and electrical connection to bring GW-1 back into service. GW-1 discharge will be routed through the pitless adapter to a new, temporary underground tie-in to Rockaway Borough's existing GW-1 pipeline outside the footprint of the pump house. The GW-1 bypass system will be operated by a New Jersey licensed operator and will be affixed with telemetry and SCADA to notify the operator of any system failure. The goal of the system is to maintain GW-1 available for pumping 24 hours a day, 7 days per week.

3.10 Zero Net Fill Excavation

During the negotiation of Modification 09, CAPE's subcontractor, CDM, identified that the flood hazard permit requirements had changed since the hibernation period for RA that occurred between the spring of 2008 and late summer of 2010. Since the existing pump house at 122 Jackson Avenue is located in the flood zone of the Rockaway River, any volume displaced by constructing the new combined GTS and GW-1 pump house, must be eliminated elsewhere in the water shed. This is referred to as the Zero Net Fill Policy. Based on current calculations, up to 80 cubic yards of displacement will occur from the construction of the combined facility, which is discussed in the next section.

3.11 Combined GW-1 Pump House and Groundwater Treatment Facility Construction

The process and control equipment will be housed inside the Groundwater Treatment Facility, which will be co-located with the new pump house. The facility will be constructed to meet all local, building, fire, and electrical codes. In general, the combined building will be constructed on a concrete slab and foundation with walls consisting of concrete masonry unit (CMU) and an exterior brick veneer. The facility will be designed and constructed in accordance with the contract documents.

3.12 Equipment and Piping Installation

The process equipment will be inspected during installation at the manufacturing facility and upon arrival at the site. Any damage or noncompliance observed during inspection(s) will be recorded and reported to the PM according to the CQCP. All process equipment will be installed in accordance with the Groundwater Treatment Facility Contract Documents.

The following equipment will be provided, set on equipment pads/pedestals, and connected to piping:

- ▲ <u>One Carbonair STAT Model 400 low profile air stripper</u> with:
  - SST sump with high level alarm switch located within sump section installed in coupling through side wall of stripper sump
  - 5 trays with demister and fasteners
  - 40 hp, 460 V, 3 phase, XP induced draft blower (2,100 cfm @ 55" wc)
  - CC8D Phenolic (Heresite P-403L/L66) Coated airstream surfaces
  - Induced draft PVC ducting
  - Teflon hole closure – not vapor tight
  - Blower low vacuum alarm switch
  - Blower pressure/vacuum gauge
  - Blower silencer
  - Air flow meter kit with local indication
  - Mounted on a common skid
  - (1)- Remote Mounted low flow switch (mounted by contractor in the field in suction duct prior to the blower)
  - (1) Process Air Heater
    - 30 KW capable based on 45 degree Delta T calculation
    - 460 Volt, 3 phase, power required
    - Self contained PID loop controller with 4-20 mA output to heater elements
    - High temperature limit switch
    - (1) Thermocouple for remote mounting by mechanical contractor in ducting after Heater
    - Epoxy coated carbon steel frame and transition pieces to 12" flanges
    - Upstream/Downstream Enable/Disable contacts and terminal block connections
- ▲ <u>Two (2) Carbonair GPC 40R vapor phase carbon adsorbers</u>
  - Approximately 7 ft. 5" diameter x approximately 128" overall height FRP vessels
  - 60" WC max pressure
  - Derakane 441 Vinyl Ester Resin
  - 100 Mil Single C-Veil Corrosion Barrier
  - Filament Wound Construction
  - Flanged and dished top and bottom head

- FRP Skirt, 2 ½" below straight side sheet shell
- Exterior final wrap gel coat exterior wrap
- 1" layer of insulation (R value of 5) with 3/16" FRP wrap
- 3,000 lbs. of virgin vapor phase coconut carbon each
- FRP grate and support with stainless steel screen
- 16" flanged inlet/outlet connections
- 16" flanged top manway
- 1" drain with valve and 1" plug
- Lifting lugs on top of unit

▲ Bag filter will be an Eaton Model MBF-0302, or equivalent. The unit will have stainless steel (i.e., 316SS) internals with 3-inch 150lb raised face flanges and will be painted in accordance with Hayward Standard ES-301

▲ Primary System Controls for GWTS and GW-1 Pump House (as needed):
- Includes SCADA and control system for primary Programmable Logic Controller (PLC) panel and (1) remote panel for up to 5 extraction wells.

Influent lines will be HDPE while all effluent piping will be Schedule 80 polyvinyl chloride (PVC). Piping inside of the treatment facility will vary from schedule 80 PVC and chlorinated PVC (CPVC) to polypropylene, polyethylene, and copper tubing, depending upon application. All HDPE piping will be put together using butt heat fusion while schedule 80 piping will be put together using primer and cement. Polypropylene and polyethylene piping will be installed using either butt heat fusion or socket fusion. Copper piping will be installed using soldering techniques. Hydrostatic testing of the piping will be conducted to ensure water/gas tightness of the system.

The mechanical piping connections will be labeled for identification. All components of the system will be fastened to the floor to avoid shifting of equipment and potential stress on pipes, fittings, or manifolds. All piping, associated joints, valves, and appurtenances, and testing of the system will be installed/conducted in accordance with the contract documents.

3.13 Electrical Installation

The site will be supplied with 460-volt, three-phase electrical power from pad mounted transformer and run via underground conduit to the electrical meter panel board mounted on the exterior wall of the treatment facility. A distribution panel will be located inside the facility with the control panel for the system. Instrument and control installation includes the installation of flow, level, temperature, and pressure instruments, panel devices and the programmable logic controller (PLC) for the facility. A licensed electrician will install the electrical components and make all electrical connections, in accordance with the contract documents.

3.14 Facility Systems Installation

Facility system installation includes the installation of all interior facility components including, but not limited to, heating, ventilation and air conditioning (HVAC), electrical and lighting, security alarms, telephones, plumbing, and fire suppression systems. All systems will be installed in accordance with the contract documents.

3.15 Treatment System Operations and Maintenance and Performance Testing

All components of process, mechanical, and electrical equipment, including piping and control systems, will be individually inspected and tested before the system is put into operation. Start-up testing will consist of two tests: an operational test and a 48-hour performance test. The treatment system will undergo a shakedown testing period of 7 days to assess operational scenarios to optimize plant flow. During the 7-day period, an operational scenario will be chosen for the 48-hour performance test. During the 48-hour performance test, the system will be operated at the chosen operational scenario to verify system performance and determine if any adjustments are required. The operational test will demonstrate the long-term operability of the system while confirming performance expectations with regard to contaminant removal. Functionality testing of the SCADA system will be incorporated including remote stop/restart during the operational testing period. The 48-hour performance test will demonstrate the performance of the system over a short duration after any mechanical problems have been resolved as a result of the operational test. During the tests, CAPE will supply labor, sampling, and analytical services for the treatment system.

CAPE's project engineer will provide startup and shakedown support during the commissioning of the system. Once the system is in place and operating, system optimization support will be provided and a comprehensive water level monitoring program will be conducted to maximize the capture zones while minimizing the extraction rate. CDM will deploy 10 level trolls to monitor pumping performance over the 10-day startup period. CDM will attempt to optimize the pumping rates to induce the radius of influence to capture the plume. The data loggers will provide continuous drawdown readings over varied pumping rates during the startup period.

Under Modification 09, CAPE has been tasked only with the startup and performance testing of the GTS. At the end of this period, the facility will be transitioned to a long term response action contractor. CAPE will provide operator training for the new contractor and/or the government; however, CAPE will not operate or maintain the facility following performance testing.

Prior to startup, an O&M manual for the facility will be developed. The O&M manual will be presented in two volumes. The first volume will contain information regarding general system descriptions, locations, emergency procedures, startup procedures, normal operation, and scheduled and unscheduled maintenance for each system. The second volume will contain a master equipment list, as-built drawings, equipment manufacturer's startup manuals, warranty information, and a list of recommended spare parts for each system.

3.16 Site Restoration and Demobilization

Areas disturbed by construction activities will be restored to their original condition, in accordance with the contract documents. Upon substantial completion of activities, graded/disturbed and wetland areas will be seeded in order to establish vegetative cover. Vegetation area preparation and application measures will be conducted in accordance the contract documents.

Upon the conclusion of construction activities at the site, all storage facilities, containment structures, office trailers, port-a-johns, waste materials, stored materials, utilities, barricades, and signs shall be dismantled and removed from the project site. Staging areas shall be properly cleaned up and graded to conform to adjacent areas. The laydown areas will be restored to their original condition. The condition of these areas shall be left so not to detract from the appearance of the surrounding areas.

Upon completion of field activities, a timely disconnect of utilities to the temporary office facilities will be completed to reduce the unnecessary consumption of energy. Provided permanent vegetative sediment and erosion control applications (seeding) have reached acceptable maturity and functionality, temporary sediment and erosion control devices such as silt fence, hay bales, and outlet protections will be removed from site. All paving, pavement repairs, and resurfacing will be conducted in accordance with the contract documents.

4.0 STANDARD OPERATING PROCEDURES

The following section pertains to ongoing operations that are key elements involved in each definable feature of work. A list of proposed equipment to be used on site, emissions and dust control procedures to be used on site, noise control/reduction techniques to be used, and a dewatering plan have been included below.

4.1 Equipment

The equipment to be used on site will vary depending upon the scheduled work task. An initial list of equipment to be used on site, including quantities and anticipated work tasks, is as follows:

- Excavator (1) – Mobilization and Site Preparation, Pump House Demolition and Ground Water Treatment Plant Construction, Pipeline Trenching and Excavation, Site Restoration and Demobilization
- Drill Rig (1) – Installation of four extraction wells and one monitoring well
- Front-End Loader (2) – Hauling of debris and loading of waste containers
- Crane (1) – Installation of Groundwater Treatment Facility
- Forklift (1) – This piece of equipment is to be used for material handling purposes during all phases of construction
- Haul Trucks (2) – Hauling of excavated soils to the laydown area, and transport of backfill materials to work areas.

4.2 Emissions and Dust Control

Emission and dust control procedures will be ongoing throughout the duration of the project. They will consist of a water misting apparatus that will be moved around the site through the use of a vehicle. All equipment routes within the work areas and haul routes on the site will be subject to emissions and dust control procedures.

Watering of the roadways and vehicle/equipment routes will be performed as needed to ensure zero/low emissions and will be contingent upon weather conditions. At the first notice of visible dust emissions from the road surface, watering will be conducted to saturate the ground surface. During periods of dry weather and heat, the operation may have to be conducted on a more regular basis due to the evaporation of water from the material.

Refer to the SSHP for information regarding exposure monitoring and action levels for the site perimeter and personnel dust monitoring. Refer to the EPP (Appendix A) for more specifics regarding emissions and dust control.

4.3 Noise Control

Noise will be kept to a minimum by allowing work to proceed during daylight operating hours only. The anticipated work hours for the site are from 07:00 hours to 17:30 hours eastern standard time (EST) (heavy machinery operation starting after 08:00). Work will not be allowed to start prior to or continue past the above stated times without prior approval from the COR. Noise exposures in excess of 85 decibels, scale A (dBA) are assumed to be present whenever voices must be raised to be heard in normal conversation at 3 feet apart and also whenever working in the immediate areas of operating generators, compressors, and similar equipment.

Site personnel working in the immediate area of operating equipment are required to use hearing protection (e.g., foam ear plugs) whenever noise exposures exceed 85 dBA. Noise levels decrease dramatically over distance and are not anticipated to pose a risk to bystanders located outside of the limits of disturbance. If excessive noise is deemed to be a concern on site, a decimeter will be used to monitor sound levels. Refer to the SSHP for information regarding noise monitoring and hearing protection requirements.

4.4 Dewatering Plan

Although not anticipated to be of a concern at the site, drainage and dewatering operations may be used to prevent surface water and ground water from entering the excavation and interfering with the orderly progress of construction. Areas to be dewatered shall be limited to those necessary to ensure adequate access, a safe excavation, and that compaction requirements can be met.

The discharge water generated through collection via sump has the potential to contain high quantities of suspended sediment. All water generated from this process will be filtered with a micron bag filter prior to release to the nearest storm drain. Sediment and erosion controls will be installed in accordance with the New Jersey Department of Transportation (NJ DOT) Soil Erosion & Sediment Control Procedures.

4.5 Traffic Control Plan

The following procedures will be implemented in an effort to contain waste and control traffic on site during construction activities. All signage, posting distances, and sign construction will be completed in accordance with the NJ DOT Standard Specifications for Road and Bridge Construction (2001), Section 617.

4.5.1 Roadway Entrances

Temporary stone construction entrances will be constructed where the site access roads adjoin existing paved roads in an effort to reduce sediment from being tracked onto the road surface.

4.5.2 Speed Limit

The speed limit of all vehicles on site is 25 miles per hour (mph) on residential roads of the Borough of Rockaway. The speed limit in the lay-down area is 5 mph. The Site Superintendent and SSHO will be responsible for the enforcement of the speed limits. Violations of this rule will be taken seriously and dealt with in accordance with the SSHP.

In all other locations (e.g., adjacent roadways, residential streets, parking lots), the posted speed limit is to be obeyed at all times.

4.5.3 Flagging

Flagging operations will be conducted in accordance with the above-referenced NJ DOT specifications as well as in coordination with the Rockaway Borough Police Department. Police officers will be used as needed for traffic control, particularly during trench construction.

5.0 PROJECT DELIVERABLES

5.1 Contractor Quality Control Plan

The CQCP describes CAPE's proposed procedures for inspections, monitoring, follow-up, and corrective actions for all phases of work. The information provided in this plan will ensure compliance with the quality and schedule goals and applicable statutory and regulatory requirements.

5.2 Accident Prevention Plan / Site Safety and Health Plan

The APP/SSHP provides site-specific facility information on waste types and characteristics, potential types of hazards, levels of protection required, monitoring and equipment required, and emergency procedures to be implemented in the event of an emergency. The SSHP serves as the primary health and safety guidance for CAPE operations necessary to accomplish project objectives. The SSHP:

- Provides background information related to the project
- Assigns responsibilities for SSHP implementation
- Identifies site hazards and hazard control measures
- Describes the exposure monitoring program
- Establishes requirements for site control and personal protective equipment (PPE)
- Discusses standard safety procedures and designates emergency response plans
- Reviews training, medical surveillance, and recordkeeping programs to be implemented at the site.

5.3 Sample and Analysis Plan

A Field Sampling Plan (FSP) and a QA Project Plan (QAPP) are incorporated into the SAP. The FSP provides guidance for the field sampling activities by defining in detail the sampling and data-gathering methods for the collection of groundwater samples from monitoring and extraction wells and confirmatory sampling of backfill material. The FSP will define the sampling protocols in accordance with NJDEP and federal standards. The QAPP describes the policy, organization, functional activities, and QA/QC protocols necessary to achieve the data quality objectives for the individual projects.

5.4 Environmental Protection Plan (EPP)

The EPP establishes the procedures and systems that CAPE will use to comply with environmental protection requirements. The EPP will be employed during construction activities to: (1) protect public safety and natural resources; (2) provide for proper disposal of materials and waste; and (3) clean up and remove trash and debris from the site. The EPP has been prepared in accordance with the contract documents and provides site-specific information for waste management, waste water management, contaminant prevention and spill control, pest control, air pollution prevention, protection of trees and

shrubs, and historical, archeological, and cultural resources protection. The EPP has been included as Appendix A of this plan.

5.5 Groundwater Treatment Facility

Engineered drawings for the building or equipment enclosure treatment system and the groundwater treatment equipment will be supplied by the selected manufacturers, and submitted to the USACE.

5.6 Operation and Maintenance Manuals

Prior to start-up, an O&M manual for each process unit or item of equipment will be developed. The O&M manual will be presented in two volumes. The first volume will contain information regarding general system descriptions, locations, emergency procedures, startup procedures, normal operation, and scheduled and unscheduled maintenance for each system. The second volume will contain a master equipment list, as-built drawings, equipment manufacturers' startup manuals, warranty information, and a list of recommended spare parts for each system.

5.7 Remedial Action Report

An Interim RA Report will be prepared in accordance with EPA 540-R-98-016 following the Operational and Functional determination. All project closeout reports will be prepared and submitted in accordance with of the contract documents.

6.0 SCHEDULE

The project schedule for the Rockaway Borough Wellfield Superfund Site Project is provided through routine updates during weekly progress meetings. The most current schedule at the time of Work Plan issue is provided in Figure 3.

7.0 POINTS OF CONTACT

A brief list of USACE, CAPE, and Emergency personnel has been provided in the table below. Please refer to the SSHP for a complete list of project contacts.

Contact	Telephone Number
Emergency	9-1-1
Emergency Hospital: St. Clare's Hospital 21 Pocono Rd. Denville, New Jersey 07834	973-586-5000
Rockaway Borough Fire Department (Non-emergency)	973-627-0157
Rockaway Borough Police Department (Non-emergency)	973-627-1314
Rockaway Township Fire Department (Non-emergency)	973-983-2865
Poison Control Center	800-492-2414
Emergency Spill Response (State of New Jersey)	877-927-6337
National Response Center	800-424-8802
Chemtrec (Chemical Transportation Emergency Center)	800-424-9300
USACE Contracting Officer Representative Michael Johnson, P.E.	Office: 201-226-6602
CAPE - Exton, PA 180 Gordon Drive, Suite 105, Exton, PA 19341	Office: 610-594-8606 FAX: 610-594-8609
CAPE - Project Field Office	Office: 973-627-4705 FAX: 973-627-4706
CAPE Project Manager David Bettendorf	Office: 240-625-4409
CAPE Project Superintendent Charlie McNeil	Mobile: 732-237-4141
CAPE CQCSM Humberto Altamirano	Mobile: 478-256-8819
CAPE Site Safety and Health Officer Robert Landle	Mobile: 732-904-5630

8.0 REFERENCES

Science Applications International Corporation. 1986. Remedial Investigation and Feasibility Study of the Rockaway Borough Well Field Site. Prepared for the New Jersey Department of Environmental Protection. July

ICF Technology Inc. 1991a. Remedial Investigation Report – Rockaway Borough Well Field Site (Draft Final). United States Environmental Protection Agency Contract No. 68-W8-0124. July 18.

ICF Technology Inc. 1991b. Feasibility Study Report – Rockaway Borough Well Field Site (Draft Final). United States Environmental Protection Agency Contract No. 68-W8-0124. August.

APPENDIX A

ENVIRONMENTAL PROTECTION PLAN

ENVIRONMENTAL PROTECTION PLAN

1.0 INTRODUCTION

This Environmental Protection Plan (EPP) establishes the procedures and systems that CAPE will use to comply with the environmental protection requirements of Contract No. W912DQ-05-D-0001, TO No. 005, for the USACE, Kansas District. This EPP will be employed during construction activities to:

- Protect public safety and natural resources
- Provide for proper disposal of contaminated materials and waste
- Clean up and remove trash and debris from the site.

The EPP provides site-specific information for:

- Recycling and solid waste minimization
- Contaminant prevention and spill control
- Pest control
- Air pollution prevention
- Protection of trees, shrubs, and wetlands
- Historical, archeological, and cultural resources protection.

2.0 RECYCLING AND SOLID WASTE MINIMIZATION PLAN

The principle components of this objective include:

- ▲ Reducing consumption of energy and natural resources
- ▲ Reducing waste generated in the office.

2.1 Reduce Consumption of Energy and Natural Resources

Reduction in the consumption of energy and natural resources will be accomplished in several ways. Equipment will not be allowed to run idle for extended periods of nonuse. Lighting and heating, ventilation, and air conditioning systems will be turned off or down during periods of nonuse.

2.2 Reduce Waste Generated in the Office

Methods to reduce waste generated in the office include: using refillable products such as pens, pencils, tape dispensers, and calendars; using a solar-powered calculator; communicating using bulletin boards or computers; eliminating fax cover sheets, using labels; printing directly onto envelopes instead of using labels; and reusing single-sided paper. In support of New Jersey's recycling program, CAPE will purchase recycled products where applicable. All practical efforts will be made to participate in government-sponsored recycling programs.

3.0 CONTAMINANT PREVENTION AND SPILL CONTROL PLAN

This plan includes procedures and methods to be used to prevent contamination to the site as well as the procedures, instructions, and reports to be used in the event of an unforeseen spill of a regulated substance in accordance with local, state, and other applicable laws and regulations. Fuel and lubricants to be used by equipment and heavy machinery are the only potentially hazardous substances to be used on site. The maximum quantity to be on site at any given time is less than approximately 25 gallons. This quantity is based on the equipment present on site and their associated fuel storage capacities. Material safety data sheets for diesel, gasoline, and lubricant oil are located in CAPE's project field office.

3.1 Documentation and Reporting Requirements

If a spill occurs, product and/or water will be collected and disposed of in accordance with federal, state, and local regulatory requirements. If a hazardous or regulated material is spilled, the Site Superintendent will immediately notify the COR, NJDEP, the National Response Center, and local emergency response personnel if a reportable quantity is released. The table below, as well as the SSHP, identifies the appropriate emergency response groups for assistance. The Site Superintendent will then follow up with complete documentation of the incident.

RELEASE REPORTING CHANNELS

	Reporting Channels	Telephone Number
1	USACE COR	201-226-6602
2	National Response Center	800-424-8802
3	Rockaway Borough Fire Department	973-627-0157
4	Rockaway Borough Police Department (Dispatcher)	973-627-1314
5	Rockaway Township Fire Department	973-983-2865
6	NJ Department of Environmental Protection	877-927-6337
7	CAPE Project Management, David Bettendorf	240-625-4409
8	CAPE Corporate Health and Safety Manager	714-920-7483

Documentation of the spill will be completed by the Site Superintendent and submitted to the CO for review. The report will include a detailed description of the event from the events leading up to the spill, containment activities, and disposal of resultant materials. The report will be submitted within 7 days of the spill occurrence. A template for the Spill Report is located in CAPE's project field office.

A consolidated list of emergency site contacts has been included above. Refer to the SSHP for a full listing of emergency contacts.

3.2 Equipment Fueling

Equipment and heavy machinery used during the project will be fueled with a fuel truck or from a storage tank. Fuel delivery will be through an authorized and licensed delivery service. All storage tanks will be double-walled, properly labeled, and grounded to prevent electrostatic accumulations or sparking. Fire extinguishers will be located adjacent to all onsite tanks and maintained on all fuel-powered equipment.

Equipment fueling will generally occur in the morning, before the initiation of other project activities, and will be conducted by personnel trained in fueling procedures. A readily deployable spill control kit containing containers, caution tape, absorbent booms, pads and pillows, shovels, PPE, etc., will be maintained on site at all times during the project and employees will be trained in containment and cleanup procedures.

3.3 Maintenance Procedure

The best approach to reduce releases of pollutants is to prevent spills and leaks, maintain a regular inspection and repair schedule, and correct potential spill situations before a spill can occur. Equipment maintenance schedules will be designed to make sure that all site-associated equipment is operating correctly, which minimizes the potential for spills and leaks. Schedules for equipment maintenance are set according to specifications of the equipment's manufacturers and plant operations. Additional maintenance is conducted, as needed, when equipment malfunctions are observed. Outdoor equipment maintenance includes maintenance of the surface beneath the equipment. A drip pan or catchments will be used whenever maintenance procedures may result in spills or drips.

Equipment operators will perform a maintenance program on their machine each morning, before work activities. Maintenance will occur in the half hour preceding job start-up. Any debris or waste resulting from maintenance operations will be placed in enclosable containers so that it can be compiled and disposed of accordingly. Waste oils or lubricants will be placed in corrosion-resistant containers and proper disposal arrangements will be made. Used petroleum products will be removed from the site monthly, at a minimum. At no time will waste oils or petroleum products be dumped or left uncovered and exposed to the environment.

Onsite washing of heavy machinery is not anticipated. If conditions require onsite equipment cleaning, provisions will be taken to avoid environmental pollution of the air, water, or ground.

3.4 Spill Control

The project Site Superintendent and the SSHO will be responsible for implementing and supervising the containment and cleanup. Onsite personnel will assist the Site Superintendent and SSHO with actual cleanup procedures. The following measures will be taken (based on applicability to specific spill situations) to properly contain and control damage during spillage events:

1. Isolate the spilled material with caution tape.
2. Remove all employees or public from spill area. Deny any unnecessary and unauthorized entry.
3. Note the probable route that spilled product is taking; whether or not the liquid is moving laterally, vertically, or both, the route needs to be addressed when taking immediate containment actions.
4. Keep employees in adjacent areas upwind of the spill.
5. Keep combustible materials and liquids away from the spill area.

All onsite employees will be trained on the proper spill containment and cleanup procedures outlined in this plan. Training will occur through a combination of daily tailgate safety meetings and site-specific safety training.

3.5 Spill Cleanup

When a spill does occur, quick and effective response is the best way to avoid pollutants reaching the storm drain systems or waterways and being released from the site. Spills are to be cleaned up promptly and not be allowed to evaporate. The three-phase procedures for cleaning up pollutants described below will be implemented.

1. ***Stop the source of the discharge.*** Identify the source and take proper steps to stop the discharge of the material into the environment.

2. ***Contain the spill.*** When a considerable amount of free product has been spilled, a berm (created out of earthen materials, concrete, boards, absorbent booms, or trenches lined with poly) may need to be constructed depending on movement of the product.

   When spills occur on water, immediately deploy absorbent sock-boom in the area down-wind of the spill in an effort to contain, and prevent further spreading of the contaminant plume. Secure both ends of the boom to land or other impermeable surface.

3. ***Initiate Cleanup.*** Retrieve as much of the free product as possible with pumps. Absorb the remainder of the product with booms/pads/pillows or other absorbent-type materials if necessary. Spills and leaks will be cleaned up without the aid of water whenever possible. This preferred "dry type" method of spill cleanup is described below:

   - Small spills will be wiped up using a dry shop rag. Used shop rags will be disposed of properly
   - Medium spills (i.e., those too large to wipe up with a dry rag) are to be contained as soon as possible. Liquids will be soaked up using a dry absorbent material such as vermiculite or kitty litter. The used absorbent is then swept up and disposed of properly. Another option is to use a wet/dry shop vacuum cleaner to collect both liquid and dry material spills. The

collected material will be disposed of properly. Vacuums will not be used for gasoline, solvents, or other volatile fluids, since the enclosed vacuum may become an explosion hazard

- Large spills will be contained as soon as possible so as not to allow the spill to reach storm water runoff areas or waterways. Absorbent "snakes" or booms may be used to contain and soak up spilled liquids. If necessary, storm drain inlets or sewer inlets will be shut off or isolated where the spill may enter. If the spilled material is hazardous, procedures described in the SSHP are followed, and appropriate agencies are notified at the direction of the COR.

The spilled product and/or impacted soils or water will be removed and disposed of offsite. The affected media will be sampled and analyzed to verify spill cleanup completion.

A spill kit will be kept on site during all phases of construction; it will contain: containers; absorbent booms, pads, and pillows; caution tape; shovels; PPE; etc. This kit will be maintained at the CAPE field office/lay-down area. Any supplies taken from the kit must be replaced immediately. The table below lists the supplier of the containment materials and the locations of additional fuel oil recovery supplies available in the event of a spill.

CLEANUP MATERIAL AND EQUIPMENT

	Item Description	Location (Company)	Telephone Number
1	Spill Kit	CAPE Field Office/Lay-Down Area (Safeware)	877-657-9713
2	Drip Pans	CAPE Equipment/Lay-Down Area (Safeware)	877-657-9713

4.0 NOISE CONTROL AND MONITORING

Noise will be kept to a minimum by allowing work to proceed during daylight operating hours only. The anticipated work hours for the site are from 07:00 hours to 17:30 hours EST (heavy machinery operation starting after 08:00). Work will not be allowed start prior to or continue past the above stated times without prior approval from the COR. Work on weekends will also need prior COR approval and notification to the Borough of Rockaway and the police department. Noise exposures in excess of 85 dBA are assumed to be present whenever voices must be raised to be heard in normal conversation at 3 feet apart and also whenever working in the immediate areas of operating generators, compressors, and similar equipment.

Site personnel working in the immediate area of operating equipment are required to use hearing protection (e.g., foam ear plugs) whenever noise exposures exceed 85 dBA. Noise levels decrease dramatically over distance and are not anticipated to pose a risk to bystanders located outside of the limits of disturbance. If excessive noise is deemed to be a concern on the site, a decimeter will be used to monitor sound levels. Refer to the SSHP for information regarding noise monitoring and hearing protection requirements.

5.0 PEST CONTROL

The application of pesticides is not anticipated to be necessary during the course of construction activities. If conditions require pesticide application, specific application procedures and personnel, as well as pesticide products, will need to be coordinated with and approved of by the COR for the project.

6.0 AIR POLLUTION CONTROL PLAN

There is a minor potential for dust emissions to occur on site during construction activities. To avoid the hazards of decreased visibility and air pollution, and to prevent debris from accidentally traveling off site, the following measures will be taken to control dust created as a result of contract activities:

- Onsite and offsite locations affected by dusting due to project-related construction and/or hauling activities will be visually monitored by CQC, supervisory, and safety personnel
- Provisions will be made during dry, dusty periods to ensure that sufficient watering or dust-control equipment is located on site or is easily accessible to react quickly to excessive dust conditions. These provisions will ensure that dust can effectively be controlled and will allow scheduled activities to continue with minimal delay or disturbance
- Onsite and offsite traffic speed requirements will be stressed with all project employees during safety indoctrinations. See the SSHP for safe operation of equipment and vehicles
- When conditions require, onsite and offsite traffic/construction areas will be watered by CAPE to reduce levels of dust. Intermittent watering, as deemed necessary by supervisory and CQC staff, will occur in such situations as often as necessary to control visibility and air quality
- Watering techniques and applications will be discussed with and approved of by the COR
- Debris and onsite dumpsters will be covered and enclosed to the fullest extent possible; this includes any subcontractor debris
- Visible accumulations of dirt and debris will be removed from haul roads.

In addition to controlling dust, the following precautions will be implemented to control exhaust and odors:

- Construction machinery will not be allowed to idle for extended periods of time
- Construction machinery used on the project will be properly maintained to control excessive exhaust
- Any odors deemed unacceptable by the CO and contractor supervisory representatives will be identified and controlled (if created by activities related to the project).

CAPE will ensure the proper level of worker and public safety are maintained during contract activities. Refer to the SSHP for specifics regarding airborne dust monitoring.

7.0 PROTECTION OF TREES AND PLANT MATERIALS

To protect the trees and plants located within the site, the following guidelines have been established.

- Orange fencing or other acceptable marking will be installed to mark the allowable limits of disturbance
- Trees within the construction area identified as requiring protection will have orange fence installed 3 feet from the trunk
- Heavy equipment operators and operators of other vehicles will be made aware of vegetated areas in which construction and/or transport activities are not to occur. Visible marking (caution tape, flagging) will be placed on these areas' boundaries
- Material stockpiles will not be located within vegetated areas
- Existing trees that are to be retained will not be used as anchors for any activities occurring on site
- Trees to be retained will not be used for the placement of signs, placards, hooks, or any similar devices that would require damage to the tree
- Limbs of trees to be retained will not be used for the hanging of any materials
- When possible, excavations within the probable root circumference of trees to be retained will be avoided
- Trees to be retained, which are damaged unnecessarily during construction activities, will be repaired by trained personnel
- Construction activities will be confined to the work areas so designated by the contract drawings and specifications.

8.0 HISTORICAL, ARCHEOLOGICAL, AND CULTURAL RESOURCES PROTECTION PLAN

Existing historical, archeological, and cultural resources designated by the COR will be identified with orange safety fencing. Employees, equipment, or other related construction activities will not be permitted inside of this fenced area. In the event that additional historical, archeological, and cultural resources are discovered during construction, the COR will be notified immediately by the PM.

APPENDIX B

SEDIMENT AND EROSION CONTROL PLAN

MORRIS COUNTY SOIL CONSERVATION DISTRICT

MAILING ADDRESS:

Morris County Courthouse
P.O. Box 900
Morristown, NJ 07963-0900

New Jersey Natural Resources Conservation Program

LOCATION ADDRESS:

560 West Hanover Avenue
Morris Township, N.J.
Tel: 973-285-2953
Fax: 973-285-8345

October 11, 2007

Conestoga-Rovers & Associates
CDM, Inc.
Raritan Plaza 1, Raritan Center
Edison, NJ 08818

Attn: Mr. Michael Popper, P.E.

Re: East Main/Wall Street Plume Remediation
Borough of Rockaway
Block #14, 45 Lot #18, 13
MCSCD #07-7173
(Rev. Date: June 2007)

Dear Mr. Popper:

This office has completed the review of the subject revised plan. It has determined that subject plan has satisfied conditions set forth in the District's Conditional Certification of July 25, 2007. Land disturbance activities may commence upon receipt of a 72-hour Start of Construction Notice.

This certification is limited to the controls specified in this plan. It is not authorization to engage in the proposed land use unless such use has been approved by the municipality or other controlling agency.

Should you have any questions regarding this or require some technical assistance, please contact this office.

Sincerely,

Joseph C. McEvoy, P.E.
District Engineer

cc: Applicant
Borough of Rockaway
Engineer
Building Inspector
Planning Board

P:\Towns\Rockaway Boro\East Main Wall Street Plume Remediation 07-7173\Satisfied Conditions 10-11-07.doc

CDM

Rockaway Borough Superfund Site

East Main/Wall Street Plume Remediation

June 2007

Applicant:

United States Environmental Protection Agency
290 Broadway
New York, NY 10007

Project Location:

Maple Avenue, Halsey Avenue, Jackson Avenue, and Union Street
Rockaway Borough
Morris County, New Jersey

Soil Erosion and Sediment Control Plan

CDM
Raritan Plaza I, Raritan Center
Edison, New Jersey 08818-3142
tel: 732 225-7000
fax: 732 225-6147

June 12, 2007

Morris County Soil Conservation District
560 West Hanover Avenue
Morris Township, New Jersey 07950

Attn: Mr. Joseph P. Dunn, Director

Project: Rockaway Borough Superfund Site: East Main/Wall Street Plume Remediation

Subject: Application for Soil Erosion and Sediment Control Plan Certification

Applicant: United States Environmental Protection Agency

Dear Mr. Dunn:

On behalf of the United States Environmental Protection Agency (EPA), CDM hereby submits a completed application for Soil Erosion and Sediment Control (SESC) Plan Certification for the above referenced project. The application package included with this letter consists of the applicable items as required pursuant to the District's checklist, including 1 set of plans.

This application is submitted as part of the East Main/Wall Street Plume Remediation project located at the Rockaway Borough Superfund Site in Rockaway Borough, Morris County, New Jersey. The details of the project are included in the enclosed package for SESC Plan Certification.

Please note the area anticipated to be disturbed during construction is 1.15 acres; hence, a Request for Authorization (RFA) for Stormwater Discharge Associated with Construction Activity is needed. Please also note that as the project is a Federal Superfund Site, application review fees are not applicable, so no payment is included with this application.

EPA endeavors to proceed with this project shortly. Therefore, timely review of this application is respectfully requested.

CDM

We thank you for your prompt attention to this matter. If we may provide any additional information, please call me at (732) 225-7000, ext. 661.

Very truly yours,

Michael Popper
Project Manager
CDM Federal Programs Corporation

cc (letter only): B. Quinn, EPA
N. Kolb, USACE
D. Bettendorf, Cape

MORRIS COUNTY SOIL CONSERVATION DISTRICT
APPLICATION FOR SOIL EROSION AND SEDIMENT CONTROL PLAN CERTIFICATION

TABLE OF CONTENTS

Tab 1 – Application Form for Soil Conservation and Sediment Control Plan Certification & Ownership Disclosure Affidavit

Tab 2 – Application Fees

Tab 3 – Description of Soil Erosion and Sediment Control Plan & Drainage Calculations

Tab 4 – Site Location Map & FEMA Floodplain Map

Tab 5 – Soil Erosion and Sediment Control Plan and Details

Tab 6 – Specifications

Tab 7 – Request for Authorization (RFA) Form: Stormwater Discharge Associated with Construction Activity

MORRIS COUNTY SOIL CONSERVATION DISTRICT
APPLICATION FOR SOIL EROSION AND SEDIMENT CONTROL PLAN CERTIFICATION

Tab 1

Application Form for Soil Conservation and Sediment Control Plan Certification

&

Ownership Disclosure Affidavit

Print Form

For District Use Only

Application Number

New Jersey Natural Resources Conservation Program

APPLICATION FOR SOIL EROSION AND SEDIMENT CONTROL PLAN CERTIFICATION

The enclosed soil erosion and sediment control plan and supporting information are submitted for certification pursuant to the Soil Erosion and Sediment Control Act, Chapter 251, P.L. 1975 as amended (NJSA 4:24-39 et. seq.) An application for certification of a soil erosion and sediment control plan shall include the items listed on the reverse side of this form

Name of Project: Rockaway Borough Superfund Site: East M		Project Location: Municipality: Rockaway Borough	
Project Street Address: Union Street at Ogden Avenue		Block: 14, 45	Lot: 18, 13
Project Owner(s) Name: United States Environmental Protection Agency (Brian Quinn)			Phone #: 212-637-4381 Fax #: 212-637-4429
Project Owner(s) Street Address (No P.O. Box Numbers): 290 Broadway		City: New York	State: NY Zip: 10007
Total Area of Project (Acres): 1.15	Total Area or Land to be Disturbed (Acres): 0.52	No. Dwelling or other Units: 1	Fee $: 1200
Plans Prepared by*: Conestoga-Rovers & Associates; Camp, Dresser, and McKee, Inc.			Phone #: CDM 732-225-7000 Fax #: 732-225-6147
Street Address: CDM: Raritan Plaza 1, Raritan Center		City: Edison	State: NJ Zip: 08818

(Engineering related items of the Soil Erosion and Sediment Control Plan MUST be prepared by or under the direction of and be sealed by a Professional Engineer or Architect licensed in the State of New Jersey, in accordance with NJAC 13:27-6.1 et. seq.)

Agent Responsible During Construction: Cape Environmental, Inc. (David Bettendorf)			
Street Address: 6851 Oak Hall Lane			
City: Columbia State: MD Zip: 21045		Phone: 443-276-1994	Fax #: 443-276-2078

The applicant hereby certifies that all soil erosion and sediment control measures are designed in accordance with current **Standards for Soil Erosion and Sediment Control In New Jersey** and will be installed in accordance with those Standards and the plan as approved by the Soil Conservation District and agrees as follows:

1. To notify the District in writing at least 48 hours in advance of any land disturbance activity. Failure to provide such notification may result in additional inspection fees.
2. To notify the District upon completion of the Project (Note: No certificate of occupancy can be granted until a report of compliance is issued by the District.
3. To maintain a copy of the certified plan on the project site during construction
4. To allow District agents to go upon project lands for inspection.
5. That any conveyance of this project or portion thereof prior to its completion will transfer full responsibility for compliance with the certified plan to any subsequent owners.
6. To comply with all terms and conditions of this application and certified plan including payment of all fees prescribed by the district fee schedule hereby incorporated by reference.

The applicant hereby acknowledges that structural measures contained in the Soil Erosion and Sediment Control Plan are reviewed for adequacy to reduce offsite soil erosion and sedimentation and not for adequacy of structural design. The applicant shall retain full responsibility for any damages which may result from any construction activity notwithstanding district certification of the subject soil erosion and sedmient control plan It is understood that approval of the plan submitted with this application shall be valid only for the duration of the inital project approval granted by the municipality. All municipal renewals of this project will require submission and approval by the district. In no case shall the approval extend beyond three and one half years at which time resubmission and certification will be required. Soil Erosion and Sediment Control Plan certification is limited to the controls specified in the plan. It is not authorization to engage in the proposed land use unless such use has been previously approved by the municipality or other controlling agency

1. Applicant Certification* Signature _____ Date _____ Applicant Name (Print) _____	3. Plan determined complete: Signature of District Official _____ Date _____
2. Receipt of fee, plan and supporting documents is hereby acknowledged: Signature of District Official _____ Date _____	4. Plan certified, denied or other actions noted above. Special Remarks: Signature of District Official _____ Date _____

*If other than project owner, written authorization of owner must be attached.

MORRIS COUNTY SOIL CONSERVATION DISTRICT
APPLICATION FOR SOIL EROSION AND SEDIMENT CONTROL PLAN CERTIFICATION

Public Rights-of-Way Included in Project Area:

- Maple Avenue
- Halsey Avenue
- Jackson Avenue
- Ogden Avenue
- Union Street

ADDENDUM

OWNERSHIP DISCLOSURE AFFIDAVIT

APPLICATION BY CORPORATION OR PARTNERSHIP

All applicants for Soil Erosion and Sediment Control Plan Certification are requested to submit a list of project owners on this form for purposes of determining potential conflicts of interest between the applicant and Soil Conservation District Officials. Attach rider in necessary.

A Corporation must also indicate its Registered Agent and Officers.

A Corporation or Partnership applying to the Soil Conservation District for plan certification, or applying for other approvals shall list the names and addresses of all stockholers or individual partners woning at least 10% of its stock of any class, or at least 10% of the interest in the partnership, as the case may be.

This disclosure requirement is continuing during the Certification period. Any transfer of ownership of more than 10% must be disclosed to the district.

Name and Address of Applicant

United States Environmental Protection Agency

290 Broadway, New York, NY 10007

If Corporation: Name and Address of Registered Agent and Officers:

N/A

Stockholders/Partners with more than 10% ownership in the projects:

1. N/A

2.

3.

4.

Sworn to and subscribed before me
this Day of 2000

NOTARY PUBLIC OF NEW JERSEY

Print Name of Authorized Signatory

Authorized Signature/Date

Title

MORRIS COUNTY SOIL CONSERVATION DISTRICT
APPLICATION FOR SOIL EROSION AND SEDIMENT CONTROL PLAN CERTIFICATION

Tab 2 – Application Fees*

1. Morris County Soil Conservation District

The calculated fee for the Rockaway Borough Superfund Site, East Main/Wall Street Plume Remediation Project is based on a disturbance area of 1.15 acres and is calculated as follows:

APPLICATION FEE = Certification Fee + Inspection Fee

= $850 + $175(2.0)

= $1,200

2. NJDEP RFA for Stormwater

APPLICATION FEE = $300.00

Payable to "Treasurer State of New Jersey"

*No payment is included because the project is a Federal Superfund Site. Application fees are not applicable.

MORRIS COUNTY SOIL CONSERVATION DISTRICT
APPLICATION FOR SOIL EROSION AND SEDIMENT CONTROL PLAN CERTIFICATION

Tab 3

Description of Soil Erosion and Sediment Control Plan

&

Drainage Calculations

Soil Erosion and Sediment Control Plan

Introduction

Included as part of this Soil Erosion and Sediment Control Plan is a completed application form and the appropriate fee, a narrative that includes a project description, and one set of engineering drawings and engineering specifications as follows:

- Sheet No. 1: Existing Conditions
- Sheet No. 2: Soil Erosion and Sediment Control Plan
- Sheet No. 3: Force Main/Trench Details
- Sheet No. 4: Soil Erosion and Sediment Control Plan – Enlarged Plan
- Sheet No. 5: Soil Erosion and Sediment Control Notes and Details I
- Sheet No. 6: Soil Erosion and Sediment Control Notes and Details II
- Specification Section 2020; Dewatering
- Specification Section 2200; Site Preparation
- Specification Section 2316; Fill
- Specification Section 2317; Excavation
- Specification Section 2318; Trenching
- Specification Section 2540; Erosion and Sedimentation Control
- Specification Section 2721; Aggregate Base Course
- Specification Section 2740; Flexible Pavement
- Specification Section 2921; Seeding

Site Description

The Rockaway Borough Well Field Site is located in the north central region of New Jersey (see Site Location Map, Tab 4), and encompasses approximately 2.1 square miles. Rockaway Borough obtains its potable water supply from groundwater using three supply wells (GW-1, GW-5, and GW-6). The municipal well field serves approximately 10,000 residents of Rockaway Borough and its surrounding communities at a rate of approximately 1.2 million gallons per day.

The project area (tract area) consists of the location of a proposed groundwater treatment plant and approximately 2,145 feet of proposed pipe/utility trenching and a corresponding 20-foot wide construction work area. The area is comprised of paved public right-of-way (1.65 acres) and three municipal lots (4.24 acres). Two of the municipal lots currently have vegetative cover. In addition, a paved municipal parking lot located west of East Main Street will be utilized for temporary construction facilities and equipment laydown area.

Approximately 864 linear feet of the proposed piping route runs east along Maple Avenue. From the intersection Maple Avenue and Halsey Avenue, the route runs south along Halsey Avenue for 479 feet. From the intersection Halsey Avenue and Jackson Avenue, the route runs east along Jackson Avenue for 431 feet before going north on Union Street for 73 feet to the proposed treatment plant.

No project activities will take place within 150 feet of a wetland.

Project History and Description

The United States Environmental Protection Agency (EPA) issued a Record of Decision in 1991, which called for groundwater extraction of plumes emanating from the Klockner & Klockner (K&K) and the East Main/Wall Street (EM/WS) areas. In 1994, EPA and Thiokol entered into a Consent Decree whereby Thiokol agreed to conduct the remedial design (RD) for both the K&K and EM/WS plumes. Thiokol was additionally required to implement the remedial action (RA) for the K&K area. Responsibility for implementation of the RA for the EM/WS area was given to EPA. The RA for the EM/WS is the project for which this SESC Plan is being submitted.

The project involves the installation of three groundwater extraction wells and vaults, associated underground piping, and a new treatment plant to process the extracted groundwater. The temporary soil erosion and sediment control measures, which will include stabilized construction access, siltation barriers, tree protection, trench protection, and temporary soil stockpile protection, will be completed prior to construction and maintained for the duration of construction pursuant to this plan. Soil erosion and sediment control measures are shown on the included drawings.

Project Completion Time

The proposed project is anticipated to require three and one half months for completion and is expected to begin on approximately August 22, 2007.

Construction Sequence

1. Mobilization to the site;
2. All field engineering and surveying;
3. Installation of all temporary facilities, including design where appropriate, required to stage personnel, equipment and materials necessary to perform the Work;
4. Implementation of erosion, sedimentation, and pollution control measures;

5. Preparation and implementation of a project specific Dewatering Plan;
6. Site preparatory activities, including but not limited to, acquisition of all necessary permits not acquired by the Owner, construction of temporary access roads, installation of temporary fences and gates, and clearing and grubbing;
7. Implementation of all traffic control plans, equipment, materials, and labor required to facilitate the project;
8. Trenching, force main installation, backfilling;
9. Groundwater treatment system (GTS) earthwork/foundation;
10. GTS construction;
11. Underground electrical wiring and connections;
12. Mechanical connections at vault locations;
13. Inspection and testing of force main;
14. Pre-final inspection of GTS;
15. Final inspection of GTS;
16. Startup/commissioning;
17. Miscellaneous work and cleanup;
18. Demobilization from the site.

Drainage Areas on Site

The soils of the project site and surrounding area are shown on the attached Natural Resources Conservation Service Web Soil Survey, which is an excerpt from the U.S. Department of Agriculture Soil Survey of Morris County. The project area encompasses two main soil types, which are described below.

Urban land – Rockaway Complex (USROCC), 3 to 15 percent slopes. This complex consists of well-drained, gently sloping gravelly sandy loam soils. It is mainly in upland areas of intensive residential or industrial development. The soil material is cobbly and stony glacial till that is mainly granitic material that contains a small amount of various other kinds of rock. This complex is about 50 percent soils that have been disturbed by man to the extent that the original profile no longer remains and 40 percent Rockaway soils. Making up the remaining percentage are small areas of Netcong and Hibernia soils. This complex is generally deep over a water table, has rapid runoff and a moderate hazard of erosion, and is likely to have lateral seepage of water on top of the fragipan. In places where excavation has exposed the fragipan, seepage of water to the surface on top of the fragipan is common and causes unstable slopes and a hazard of erosion. Moderate measures are needed to control erosion and runoff. Suitable practices include using diversions, interceptor drains, and a grass cover.

Urban land – Rockaway Complex (USROCD), 15 to 25 percent slopes. This complex is in areas of steep, well-drained gravelly or stony sandy loam soils. It is in upland areas of residential developments. The soil material is cobbly and stony glacial till that is mainly granitic gneiss. This complex is about 50 percent soils that have been

disturbed by man to the extent that the original profile no longer remains and 40 percent Rockaway soils. Making up the remaining percentage are small areas of bouldery Rockaway soils, Netcong and Hibernia soils, or areas of bedrock outcrop. Most areas have been cut and filled for use as construction sites.

The single drainage area defined for purposes of peak drainage calculations is the area where the treatment plant will be constructed, generally Block 14 Lot 18. It has an area of approximately 7,718 ft^2 and contains a pump house taking up approximately 184 ft^2. The present pervious area is 7,534 ft^2. The area of the proposed treatment building is approximately 848 ft^2, so the pervious area after development will be 6,686 ft^2.

The size of the drainage area will not change; however there will be new impervious surfaces added as a result of this project, so peak drainage calculations for present and post-development conditions are included.

The 24-hour rainfall distribution (from TR-55) for the site is as follows:

2-year storm	3.0 inches
10-year storm	5.0 inches
100-year storm	7.0 inches

Peak discharge for present and developed (after construction of treatment building) conditions were computed by hand using the TR-55 Method provided by the U.S. Department of Agriculture. As shown on the attached drainage calculations, there is no appreciable increase in the amount of runoff as a result of the proposed construction. The following table summarizes the results of the drainage volume calculations, which are included as worksheet attachments:

Storm Frequency	2-year	10-year	100-year
Present conditions (ft^3/second)	0.12	0.33	0.58
Post-development conditions (ft^3/second)	0.14	0.36	0.62
Difference (ft^3/second)	*0.02*	*0.03*	*0.04*

Trenching and underground piping installation areas are not included in this analysis because these areas are being restored to pre-construction conditions.

References

The following references were used for the preparation of this Soil Erosion and Sediment Control Plan:

- Natural Resources Conservation Service, United States Department of Agriculture. Web Soil Survey 1.1 [Online WWW]. Available URL: "http://websoilsurvey.nrcs.usda.gov" [Accessed 21 May 2007].

- Soil Survey of Morris County, New Jersey. United States Department of Agriculture Soil Conservation Service, 1976.
- Standards for Soil Erosion and Sediment Control in New Jersey.
- Technical Release-55: Urban Hydrology for Small Watersheds, Natural Resources Conservation Service, USDA, June 1986.

SOIL SURVEY OF MORRIS COUNTY, NEW JERSEY

Soil Survey of Project Area

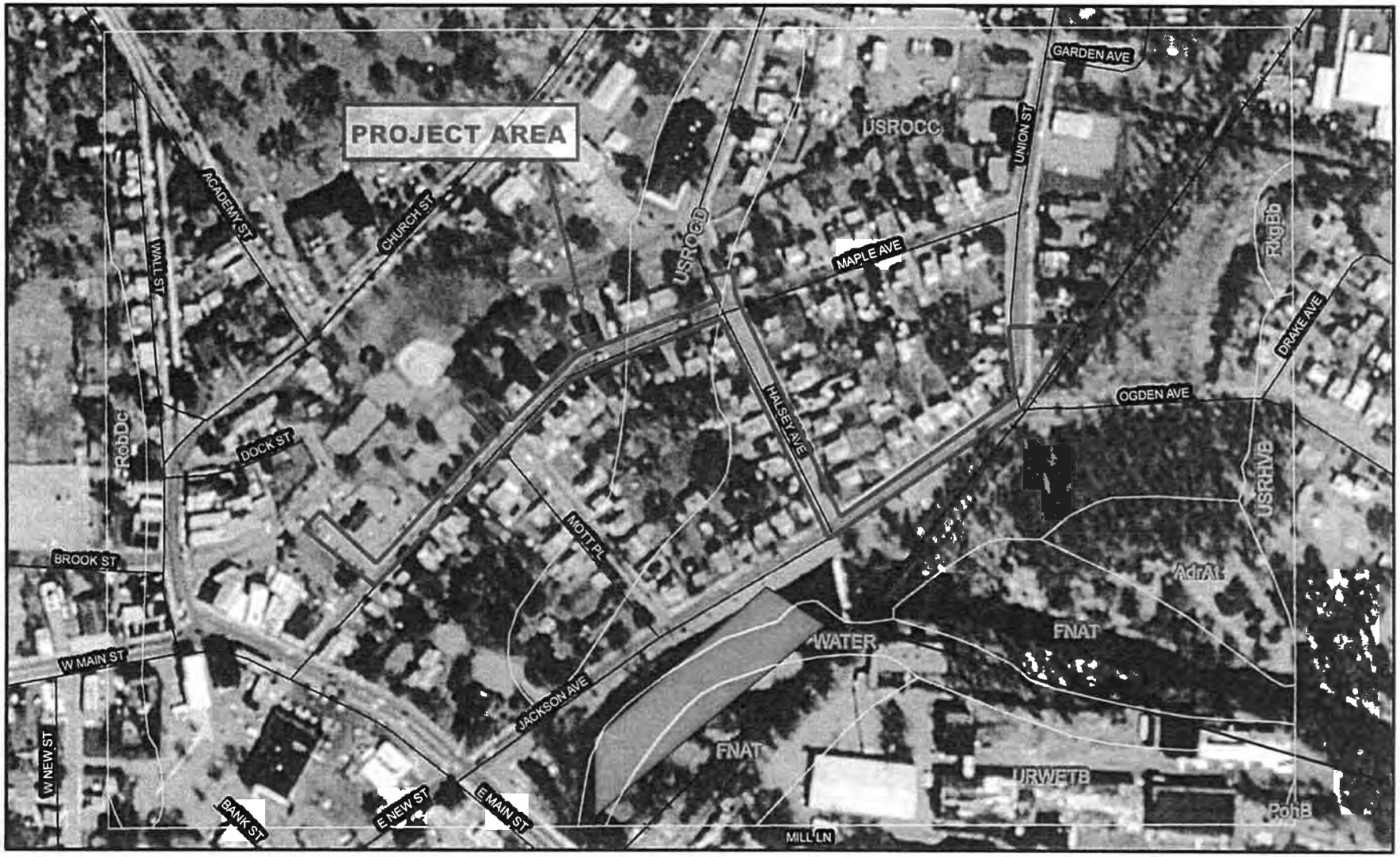

Meters
0 35 70 140

Feet
0 100 200 400 600 800

Soil Survey of Project Area

MAP LEGEND

- Soil Map Units
- Interstate Highways
- Roads
- Rails
- Water
- Hydrography
- Oceans
- Escarpment, bedrock
- Escarpment, non-bedrock
- Gulley
- Levee
- Slope
- Blowout
- Borrow Pit
- Clay Spot
- Depression, closed
- Eroded Spot
- Gravel Pit
- Gravelly Spot
- Gulley
- Lava Flow
- Landfill
- Marsh or Swamp
- Miscellaneous Water
- Rock Outcrop
- Saline Spot
- Sandy Spot
- Slide or Slip
- Sinkhole
- Sodic Spot
- Spoil Area
- Stony Spot
- Very Stony Spot
- Perennial Water
- Wet Spot

MAP INFORMATION

Source of Map: Natural Resources Conservation Service
Web Soil Survey URL: http://websoilsurvey.nrcs.usda.gov

Coordinate System: UTM Zone 18

Soil Survey Area: Morris County, New Jersey
Spatial Version of Data: 1
Soil Map Compilation Scale: 1:24000

Map comprised of aerial images photographed on these dates:
4/10/1997

The orthophoto or other base map on which the soil lines were compiled and digitized probably differs from the background imagery displayed on these maps. As a result, some minor shifting of map unit boundaries may be evident.

Map Unit Legend Summary

Morris County, New Jersey

Map Unit Symbol	Map Unit Name	Acres in AOI	Percent of AOI
AdrAt	Adrian muck, 0 to 3 percent slopes, frequently flooded	2.0	2.5
FNAT	Fluvaquents and udifluvents, 0 to 3 percent slopes, frequently flooded	5.7	7.1
PohB	Pompton sandy loam, 3 to 8 percent slopes	0.0	0.0
RkgBb	Ridgebury loam, 0 to 8 percent slopes, very stony	0.3	0.4
RobDc	Rockaway sandy loam, 15 to 25 percent slopes, extremely stony	1.8	2.2
URWETB	Urban land, wet substratum, 0 to 8 percent slopes (SSURGO!)	4.0	5.0
USRHVB	Urban land-Riverhead complex, 3 to 8 percent slopes	1.0	1.2
USROCC	Urban land-Rockaway complex, 3 to 15 percent slopes	56.9	70.9
USROCD	Urban land-Rockaway complex, 15 to 25 percent slopes	5.7	7.1
WATER	Water	2.8	3.5

Rockaway Borough Superfund Site
Soil Erosion and Sediment Control Plan

Drainage Calculations – Groundwater Treatment System Location

1. Calculate areas (using Adobe Acrobat area tool)
   - lot = 7,718 ft^2
   - existing pump house (impervious area) = 184 ft^2
   - proposed treatment building (impervious area) = 848 ft^2

2. Calculate peak runoff (Q) for 2, 10, and 100-yr. storms (see Worksheet 2)
   - for both present and developed lots

3. Calculate T_t
   - assume sheet flow since length of lot is < 300 ft.
   - assume flow length (L) of 144 ft. for the present lot (sloping from south to northeast)
   - for developed lot, assume flow length (L) of 162 ft., since water will have to flow around the treatment building.

4. Calculate peak discharge (q_p)
   - for both present and developed lots
   - define the drainage area as the lot only
   - existing pump house = 184 ft^2
   - proposed treatment building (impervious area) = 848 ft^2

5. Results
   - increase in peak discharge is very small (<.05 ft^3/sec in all storm cases)
   - no drainage handling measures are necessary.

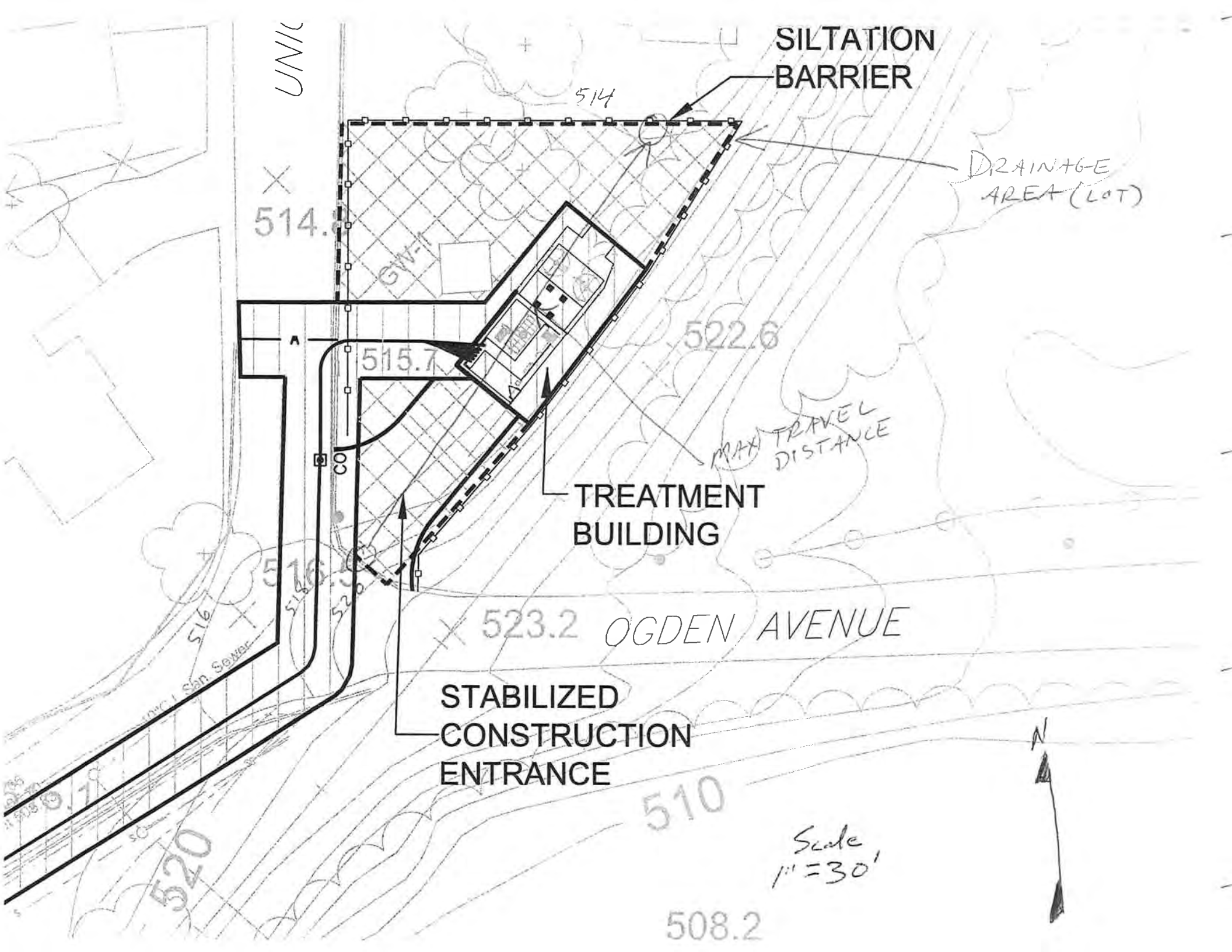
SILTATION BARRIER
514
DRAINAGE AREA (LOT)
514.8
GW-1
522.6
515.7
MAX TRAVEL DISTANCE
TREATMENT BUILDING
516.5
523.2
OGDEN AVENUE
STABILIZED CONSTRUCTION ENTRANCE
510
520
508.2
Scale 1" = 30'
N

Worksheet 2: Runoff curve number and runoff

Project	By	Date
Rockaway Borough Superfund Site	JVB	5/23/07
Location	**Checked**	**Date**
Rockaway Borough, NJ	CJ	5/23/07

Check one: [X] Present [ ] Developed

1. Runoff curve number

Soil name and hydrologic group (appendix A)	Cover description (cover type, treatment, and hydrologic condition; percent impervious; unconnected/connected impervious area ratio)	CN 1/ Table 2-2	CN 1/ Figure 2-3	CN 1/ Figure 2-4	Area [ ] acres [ ] mi² [X] %	Product of CN x area
Rockaway, C	Open Space, good condition	74			97.6	7222
Rockaway, C	Roof	98			2.4	235
	Totals				100	7457

1/ Use only one CN source per line

CN (weighted) = $\frac{\text{total product}}{\text{total area}} = \frac{7457}{100} = 74.6$; Use CN ➡ 75

2. Runoff

		Storm #1	Storm #2	Storm #3
Frequency	yr	2	10	100
Rainfall, P (24-hour)	in	3	5	7
Runoff, Q	in	0.96	2.45	4.15

(Use P and CN with table 2-1, figure 2-1, or equations 2-3 and 2-4)

Worksheet 2: Runoff curve number and runoff

Project	By	Date
Rockaway Borough Superfund Site	JVB	5/23/07
Location	**Checked**	**Date**
Rockaway Borough, NJ	CJ	5/23/07

Check one: ☐ Present ☒ Developed

1. Runoff curve number

Soil name and hydrologic group (appendix A)	Cover description (cover type, treatment, and hydrologic condition; percent impervious; unconnected/connected impervious area ratio)	CN 1/ Table 2-2	CN 1/ Figure 2-3	CN 1/ Figure 2-4	Area ☐ acres ☐ mi² ☒ %	Product of CN x area
Rockaway, C	Open Space, good condition	74			87	6438
Rockaway, C	Roof, paving	98			13	1274
					Totals ➡ 100	7712

1/ Use only one CN source per line

CN (weighted) = $\frac{\text{total product}}{\text{total area}} = \frac{7712}{100} = 77.1$; Use CN ➡ 77

2. Runoff

		Storm #1	Storm #2	Storm #3
Frequency	yr	2	10	100
Rainfall, P (24-hour)	in	3	5	7
Runoff, Q	in	1.08	2.63	4.37

(Use P and CN with table 2-1, figure 2-1, or equations 2-3 and 2-4)

Worksheet 3: Time of Concentration (T_c) or travel time (T_t)

Project	By	Date
Rockaway Borough Superfund Site	JVB	5/23/07
Location	**Checked**	**Date**
Rockaway Borough, NJ	CJ	5/23/07

Check one: [X] Present [ ] Developed

Check one: [ ] T_c [X] T_t through subarea

Notes: Space for as many as two segments per flow type can be used for each worksheet. Include a map, schematic, or description of flow segments.

Sheet flow (Applicable to Tc only)

	Segment ID		
1. Surface description (table 3-1)	AB		
2. Manning's roughness coefficient, n (table 3-1)	Dense grass		
3. Flow length, L (total L † 300 ft) ft	0.24		
4. Two-year 24-hour rainfall, P_2 in	144		
5. Land slope, s ft/ft	3		
6. $T_t = \frac{0.007\ (nL)^{0.8}}{P_2^{0.5}\ s^{0.4}}$ Compute T_t hr	0.028		
	0.287	+	= 0.29

Shallow concentrated flow

	Segment ID		
7. Surface description (paved or unpaved)			
8. Flow length, L ft			
9. Watercourse slope, s ft/ft			
10. Average velocity, V (figure 3-1) ft/s			
11. $T_t = \frac{L}{3600\ V}$ Compute T_t hr		+	=

Channel flow

	Segment ID		
12. Cross sectional flow area, a ft^2			
13. Wetted perimeter, p_w ft			
14. Hydraulic radius, $r = \frac{a}{p_w}$ Compute r ft			
15 Channel slope, s ft/ft			
16. Manning's roughness coefficient, n			
17. $V = \frac{1.49\ r^{2/3}\ s^{1/2}}{n}$ Compute V ft/s			
18. Flow length, L ft			
19. $T_t = \frac{L}{3600\ V}$ Compute T_t hr		+	=

20. Watershed or subarea T_c or T_t (add T_t in steps 6, 11, and 19) Hr 0.29

Worksheet 3: Time of Concentration (T_c) or travel time (T_t)

Project	By	Date
Rockaway Borough Superfund Site	JVB	5/23/07
Location	**Checked**	**Date**
Rockaway Borough, NJ	CJ	5/23/07

Check one: ☐ Present ☒ Developed

Check one: ☐ T_c ☒ T_t through subarea

Notes: Space for as many as two segments per flow type can be used for each worksheet. Include a map, schematic, or description of flow segments.

Sheet flow (Applicable to Tc only)

	Segment ID		
1. Surface description (table 3-1)	AB		
2. Manning's roughness coefficient, n (table 3-1)	Dense grass		
3. Flow length, L (total L † 300 ft) ft	0.24		
4. Two-year 24-hour rainfall, P_2 in	162		
5. Land slope, s ft/ft	3		
6. $T_t = \frac{0.007\ (nL)^{0.8}}{P_2^{0.5}\ s^{0.4}}$ Compute T_t hr	0.028		
	0.316	+	= 0.32

Shallow concentrated flow

	Segment ID		
7. Surface description (paved or unpaved)			
8. Flow length, L ft			
9. Watercourse slope, s ft/ft			
10. Average velocity, V (figure 3-1) ft/s			
11. $T_t = \frac{L}{3600\ V}$ Compute T_t hr		+	=

Channel flow

	Segment ID		
12. Cross sectional flow area, a ft^2			
13. Wetted perimeter, p_w ft			
14. Hydraulic radius, $r = \frac{a}{p_w}$ Compute r ft			
15 Channel slope, s ft/ft			
16. Manning's roughness coefficient, n			
17. $V = \frac{1.49\ r^{2/3}\ s^{1/2}}{n}$ Compute V ft/s			
18. Flow length, L ft			
19. $T_t = \frac{L}{3600\ V}$ Compute T_t hr		+	=

20. Watershed or subarea T_c or T_t (add T_t in steps 6, 11, and 19) Hr 0.32

Worksheet 4: Graphical Peak Discharge method

Project	By	Date
Rockaway Borough Superfund Site	JVB	5/23/07
Location	**Checked**	**Date**
Rockaway Borough, NJ	CJ	5/23/07

Check one: [x] Present [ ] Developed

1. Data

Drainage area ..... A_m = 0.000277 mi^2 (acres/640)

Runoff curve number .....CN = 75 (From worksheet 2)

Time of concentration ..... T_c = 0.29 hr (From worksheet 3)

Rainfall distribution ..... = III (I, IA, II III)

Pond and swamp areas sprea
throughout watershed ..... = 0 percent of A_m (_____ acres or mi^2 covered)

	Storm #1	Storm #2	Storm #3
2. Frequency ..... yr	2	10	100
3. Rainfall, P (24-hour) ..... in	3	5	7
4. Initial abstraction, I_a ..... in (Use CN with table 4-1)	0.667	0.667	0.667
5. Compute I_a/P	0.222	0.133	0.095
6. Unit peak discharge, q_u ..... csm/in (Use T_c and I_a/P with exhibit 4– III)	460	485	505
7. Runoff, Q ..... in (From worksheet 2) Figure 2-6	0.96	2.45	4.15
8. Pond and swamp adjustment factor, F_p ..... (Use percent pond and swamp area with table 4-2. Factor is 1.0 for zero percent pond ans swamp area.)	1	1	1
9. Peak discharge, q_p ..... ft^3/s	0.122	0.329	0.581

(Where $q_p = q_u A_m Q F_p$)

Worksheet 4: Graphical Peak Discharge method

Project	By	Date
Rockaway Borough Superfund Site	JVB	5/23/07
Location	**Checked**	**Date**
Rockaway Borough, NJ	CJ	5/23/07

Check one: ☐ Present ☒ Developed

1. Data

Drainage area ..... A_m = 0.000277 mi^2 (acres/640)

Runoff curve number .....CN = 77 (From worksheet 2)

Time of concentration ..... T_c = 0.32 hr (From worksheet 3)

Rainfall distribution ..... = III (I, IA, II III)

Pond and swamp areas sprea
throughout watershed ..... = 0 percent of A_m (_____ acres or mi^2 covered)

	Storm #1	Storm #2	Storm #3
2. Frequency ..... yr	2	10	100
3. Rainfall, P (24-hour) ..... in	3	5	7
4. Initial abstraction, I_a ..... in (Use CN with table 4-1)	0.597	0.597	0.597
5. Compute I_a/P	0.199	0.119	0.085
6. Unit peak discharge, q_u ..... csm/in (Use T_c and I_a/P with exhibit 4– III)	450	475	5
7. Runoff, Q ..... in (From worksheet 2) Figure 2-6	1.08	2.63	4.37
8. Pond and swamp adjustment factor, F_p ..... (Use percent pond and swamp area with table 4-2. Factor is 1.0 for zero percent pond ans swamp area.)	1	1	1
9. Peak discharge, q_p ..... ft^3/s	0.135	0.346	0.611

(Where $q_p = q_u A_m Q F_p$)

MORRIS COUNTY SOIL CONSERVATION DISTRICT
APPLICATION FOR SOIL EROSION AND SEDIMENT CONTROL PLAN CERTIFICATION

Tab 4

Site Location Map

&

FEMA Floodplain Map

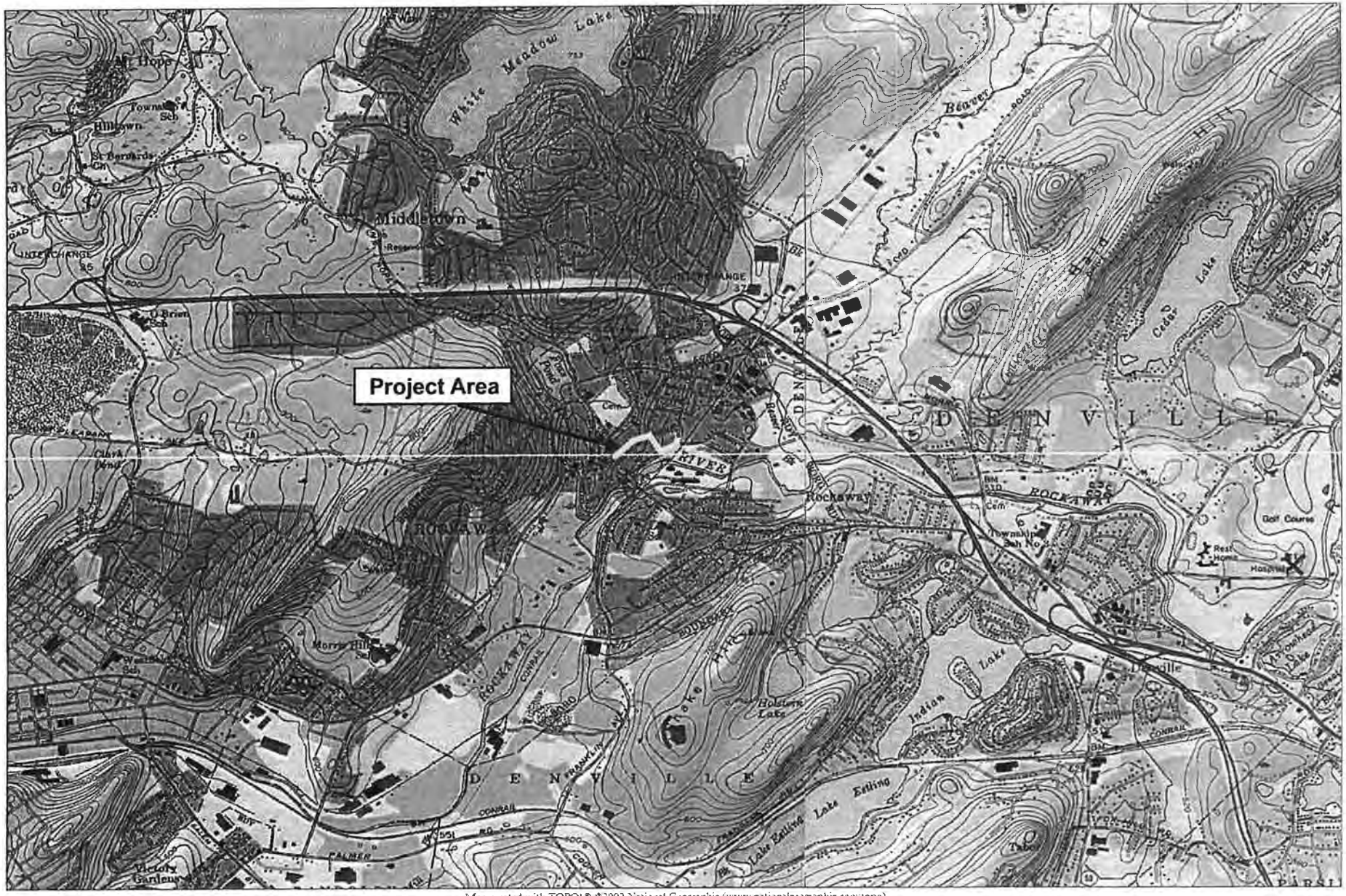

Map created with TOPO!® ©2002 National Geographic (www.nationalgeographic.com/topo)

Figure 1

Site Location Map

Rockaway Borough Superfund Site

East Main/Wall Street Plume Remediation

Morris County, NJ

CDM

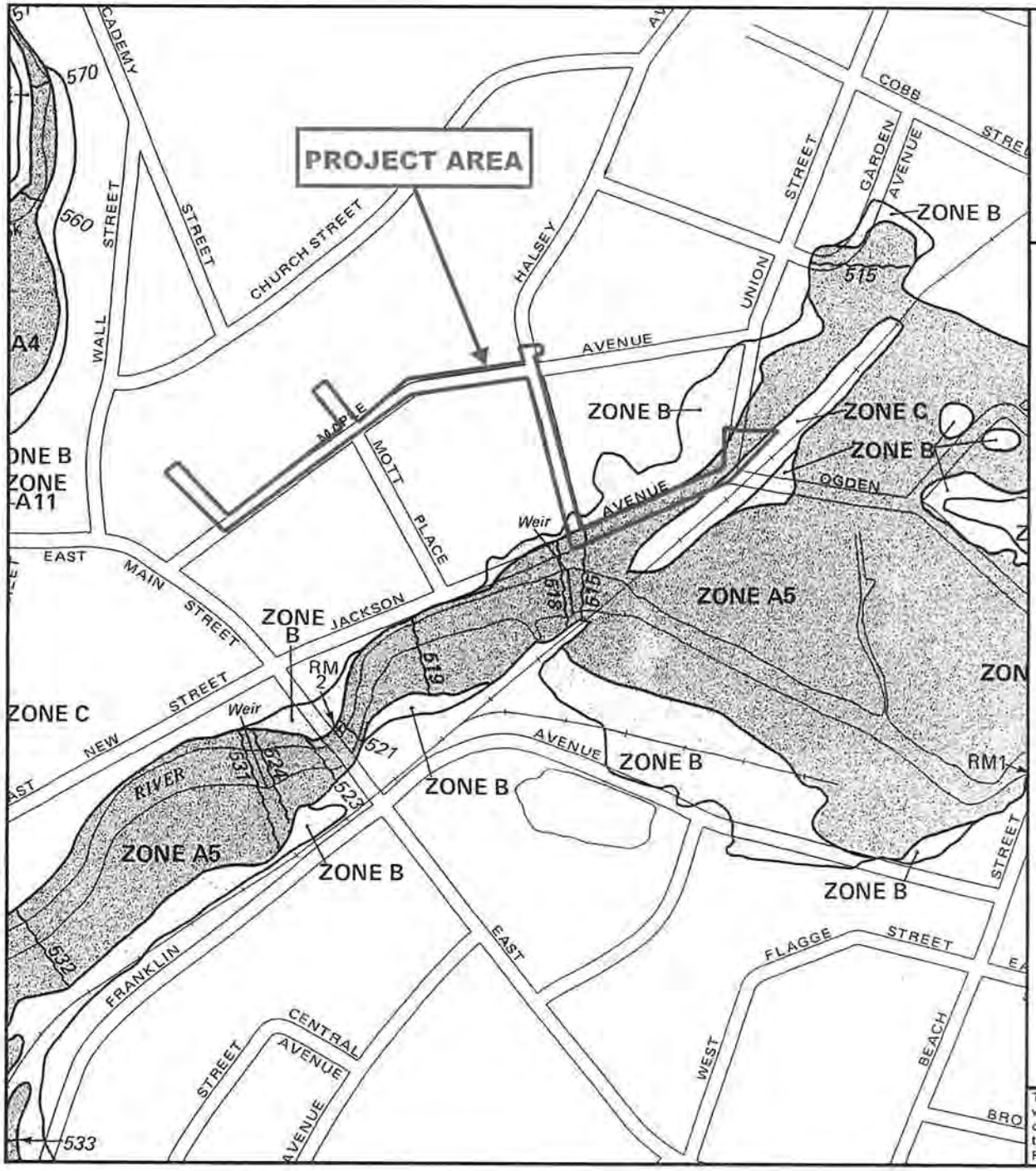

APPROXIMATE SCALE

400 0 400 FEET

NATIONAL FLOOD INSURANCE PROGRAM

FIRM

FLOOD INSURANCE RATE MAP

BOROUGH OF
ROCKAWAY,
NEW JERSEY
MORRIS COUNTY

ONLY PANEL PRINTED

COMMUNITY-PANEL NUMBER
345315 0001 B

MAP REVISED:
JUNE 19, 1985

Federal Emergency Management Agency

This is an official copy of a portion of the above referenced flood map. It was extracted using F-MIT On-Line. This map does not reflect changes or amendments which may have been made subsequent to the date on the title block. For the latest product information about National Flood Insurance Program flood maps check the FEMA Flood Map Store at www.msc.fema.gov

KEY TO MAP

500-Year Flood Boundary	ZONE B
100-Year Flood Boundary	
Zone Designations*	ZONE A1 … ZONE A5
100-Year Flood Boundary	
500-Year Flood Boundary	ZONE B
Base Flood Elevation Line With Elevation In Feet**	513
Base Flood Elevation in Feet Where Uniform Within Zone**	(EL 987)
Elevation Reference Mark	RM7×
Zone D Boundary	
River Mile	•M1.5

**Referenced to the National Geodetic Vertical Datum of 1929

*EXPLANATION OF ZONE DESIGNATIONS

ZONE	EXPLANATION
A	Areas of 100-year flood; base flood elevations and flood hazard factors not determined.
A0	Areas of 100-year shallow flooding where depths are between one (1) and three (3) feet; average depths of inundation are shown, but no flood hazard factors are determined.
AH	Areas of 100-year shallow flooding where depths are between one (1) and three (3) feet; base flood elevations are shown, but no flood hazard factors are determined.
A1-A30	Areas of 100-year flood; base flood elevations and flood hazard factors determined.
A99	Areas of 100-year flood to be protected by flood protection system under construction; base flood elevations and flood hazard factors not determined.
B	Areas between limits of the 100-year flood and 500-year flood; or certain areas subject to 100-year flooding with average depths less than one (1) foot or where the contributing drainage area is less than one square mile; or areas protected by levees from the base flood. (Medium shading)
C	Areas of minimal flooding. (No shading)
D	Areas of undetermined, but possible, flood hazards.
V	Areas of 100-year coastal flood with velocity (wave action); base flood elevations and flood hazard factors not determined.

APPROXIMATE SCALE

400 0 400 FEET

NATIONAL FLOOD INSURANCE PROGRAM

FIRM
FLOOD INSURANCE RATE MAP

BOROUGH OF
ROCKAWAY,
NEW JERSEY
MORRIS COUNTY

ONLY PANEL PRINTED

COMMUNITY-PANEL NUMBER
345315 0001 B

MAP REVISED:
JUNE 19, 1985

Federal Emergency Management Agency

This is an official copy of a portion of the above referenced flood map. It was extracted using F-MIT On-Line. This map does not reflect changes or amendments which may have been made subsequent to the date on the title block. For the latest product information about National Flood Insurance Program flood maps check the FEMA Flood Map Store at www.msc.fema.gov

MORRIS COUNTY SOIL CONSERVATION DISTRICT
APPLICATION FOR SOIL EROSION AND SEDIMENT CONTROL PLAN CERTIFICATION

Tab 5 – Soil Erosion and Sediment Control Plan and Details

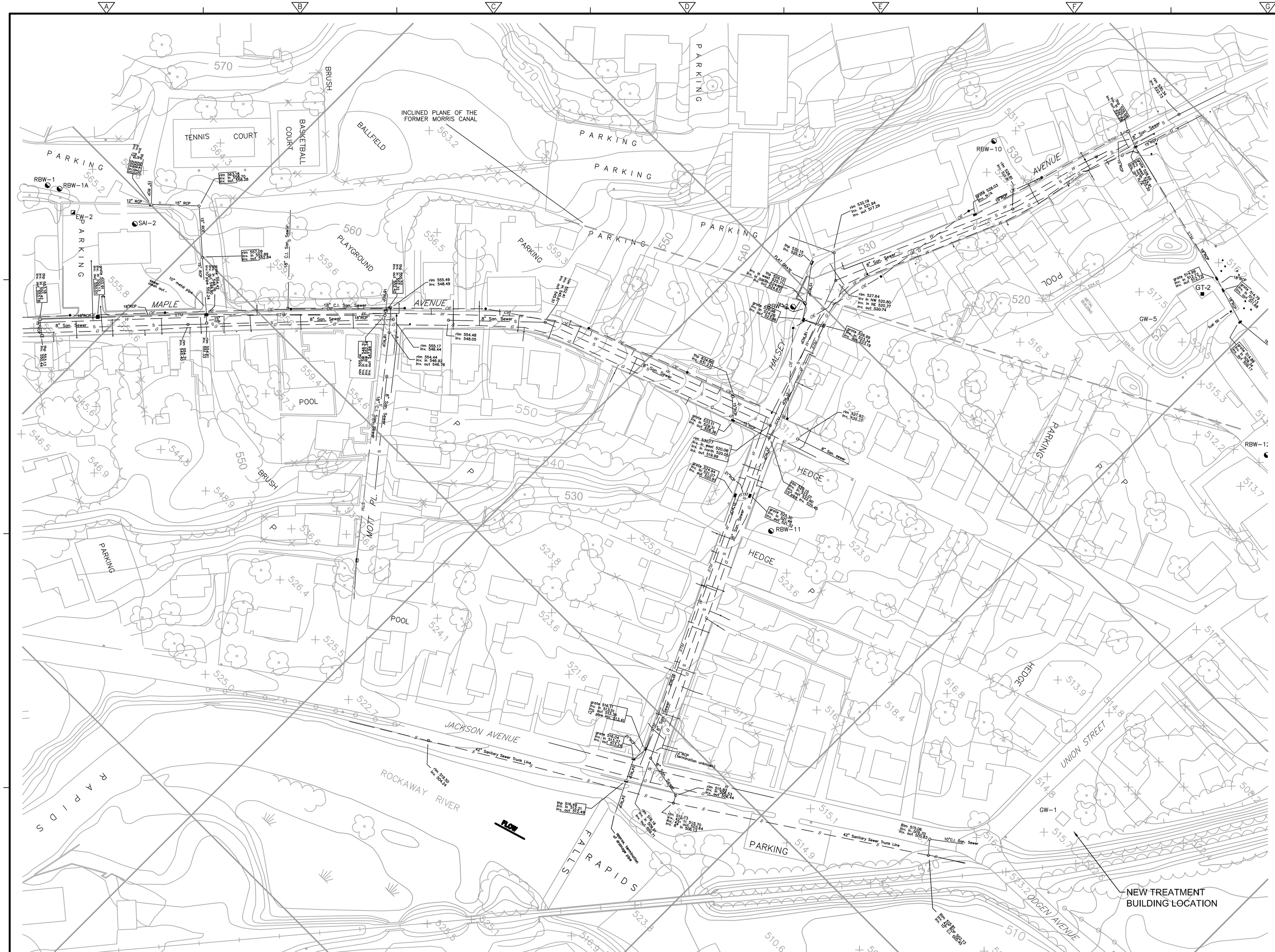

LEGEND

- FENCE LINE
- POWER POLE
- MONITORING WELL LOCATION
- EXTRACTION WELL LOCATION
- WATER LINE
- GAS LINE
- SANITARY SEWER LINE
- STORM SEWER
- OVERHEAD ELECTRICAL LINE
- SOIL BORING LOCATION

N

1" = 60'

30 0 60

DEMETRIOS KLERIDES
PROFESSIONAL ENGINEER
NEW JERSEY LICENSE NO. GE 40679

REV. NO.	DATE	DRWN	CHKD	REMARKS

DESIGNED BY: JVB
DRAWN BY: EJL
SHEET CHK'D BY: JVB
CROSS CHK'D BY: MP
APPROVED BY: DK
DATE: JUNE 2007

CDM
Camp Dresser & McKee
Raritan Plaza I, Raritan Center
Edison, New Jersey 08818
Tel: (732) 225-7000
consulting • engineering • construction • operations

U.S. ARMY CORPS OF ENGINEERS
KANSAS CITY DISTRICT

ROCKAWAY BOROUGH SUPERFUND SITE
EAST MAIN/WALL STREET PLUME REMEDIATION

EXISTING SITE CONDITIONS

PROJECT NO. 56540-6170
FILE NAME:
SHEET NO. 1

J:\56540\6170\CIVL\ 19017-40(008)CI-NF001 06/06/07 17:13 larsone; XREFS: CDM_2234

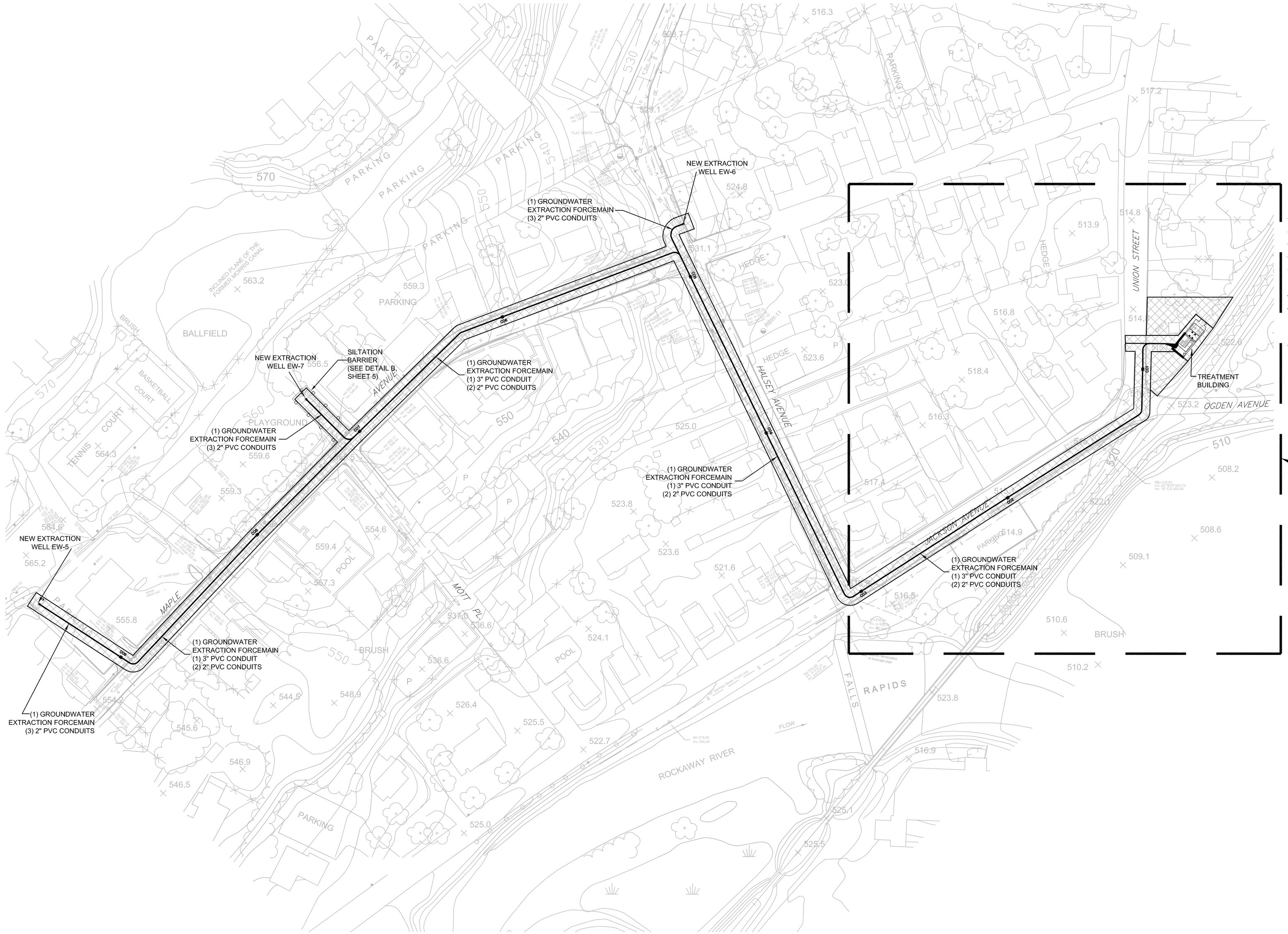

LEGEND

- FENCE LINE
- POWER POLE
- MONITORING WELL LOCATION
- EXTRACTION WELL LOCATION
- WATER LINE
- GAS LINE
- SANITARY SEWER LINE
- STORM SEWER
- OVERHEAD ELECTRICAL LINE
- CO1 CLEANOUT LOCATION
- NEW FORCEMAIN LINE
- NEW DISCHARGE LINE
- LIMITS OF DISTURBANCE
- SILTATION BARRIER

DEMETRIOS KLERIDES
PROFESSIONAL ENGINEER
NEW JERSEY LICENSE NO. GE 40679

REV. NO.	DATE	DRWN	CHKD	REMARKS

DESIGNED BY: JVB
DRAWN BY: EJL
SHEET CHK'D BY: JVB
CROSS CHK'D BY: MP
APPROVED BY: DK
DATE: JUNE 2007

CDM
Camp Dresser & McKee
Raritan Plaza I, Raritan Center
Edison, New Jersey 08818
Tel: (732) 225-7000
consulting • engineering • construction • operations

U.S. ARMY CORPS OF ENGINEERS
KANSAS CITY DISTRICT

ROCKAWAY BOROUGH SUPERFUND SITE
EAST MAIN/WALL STREET PLUME REMEDIATION

SOIL EROSION AND SEDIMENT CONTROL PLAN

PROJECT NO. 56540-6170
FILE NAME:
SHEET NO. **2**

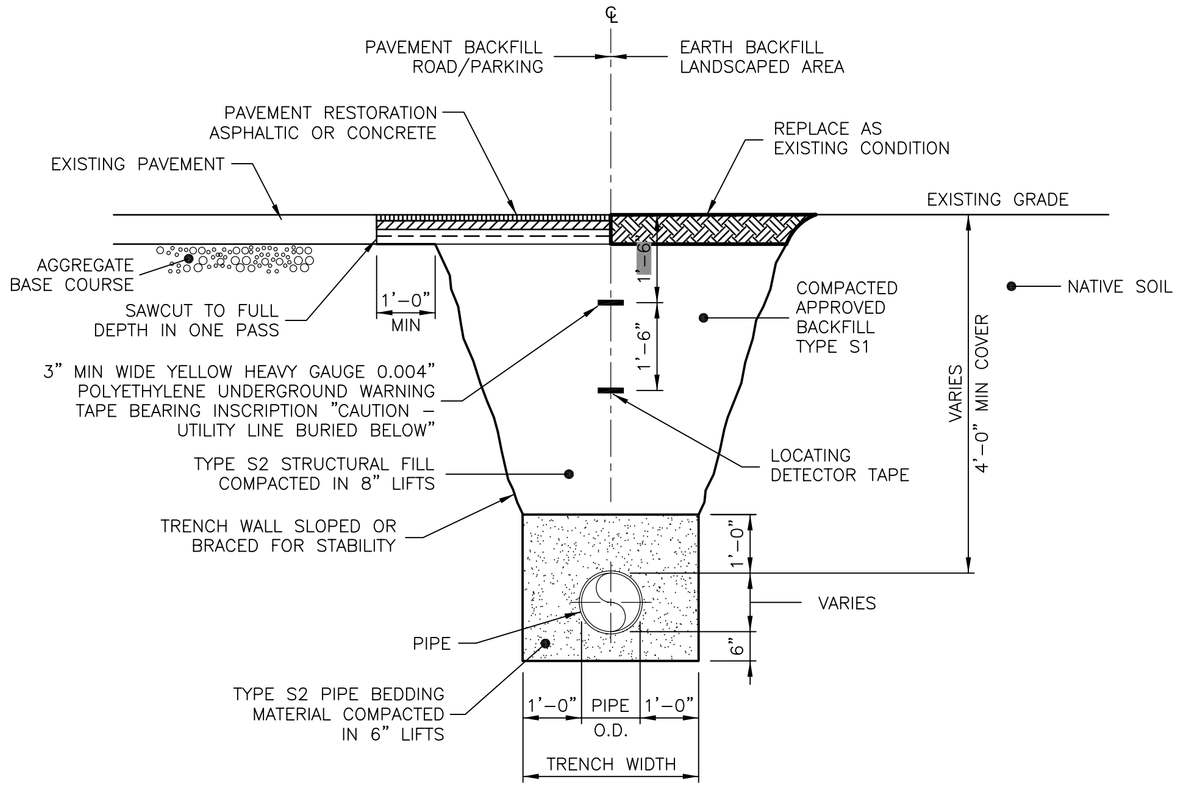

TYPICAL UTILITY TRENCH
NTS

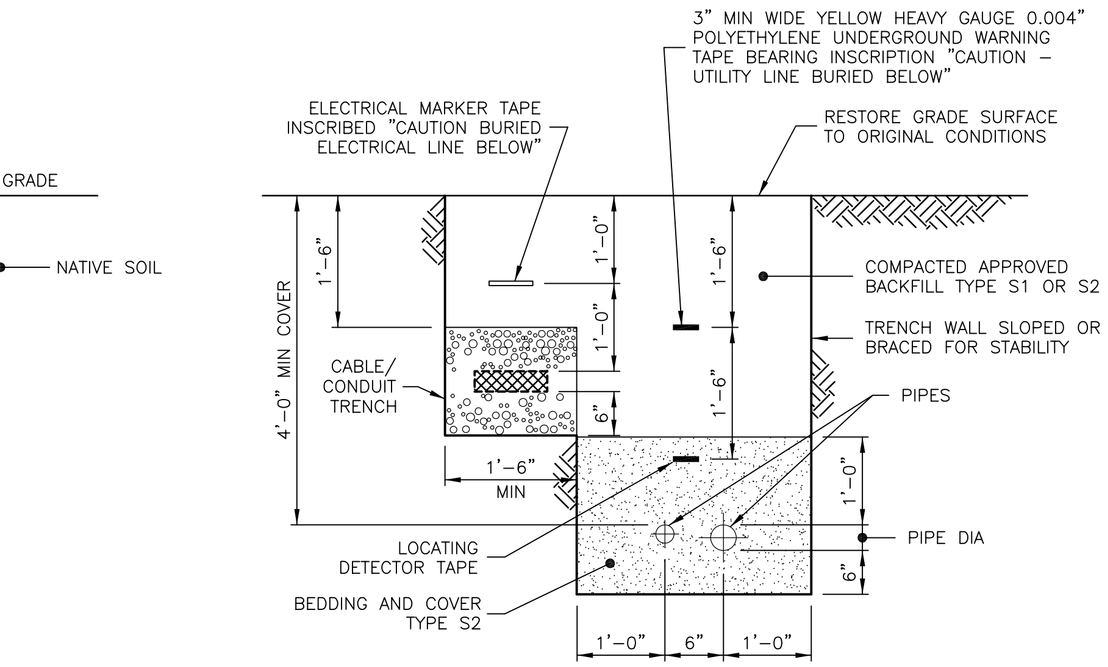

TYPICAL PIPE AND CABLE/CONDUIT TRENCH
NTS

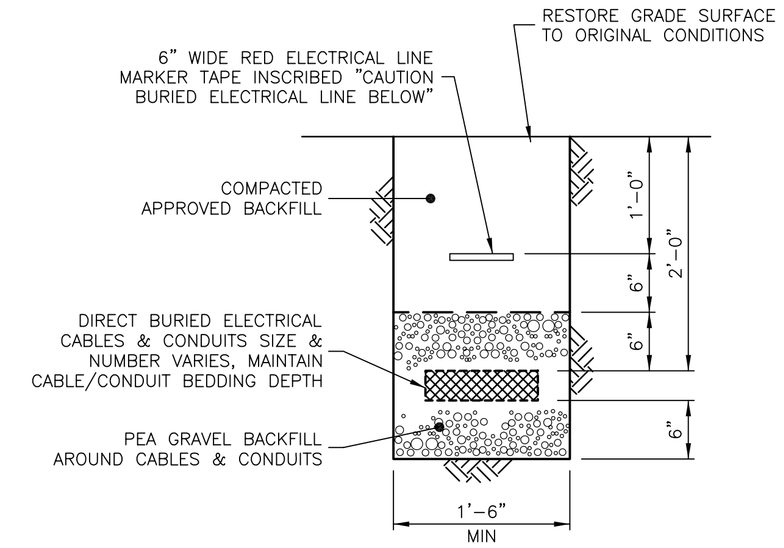

TYPICAL CABLE/CONDUIT TRENCH
NTS

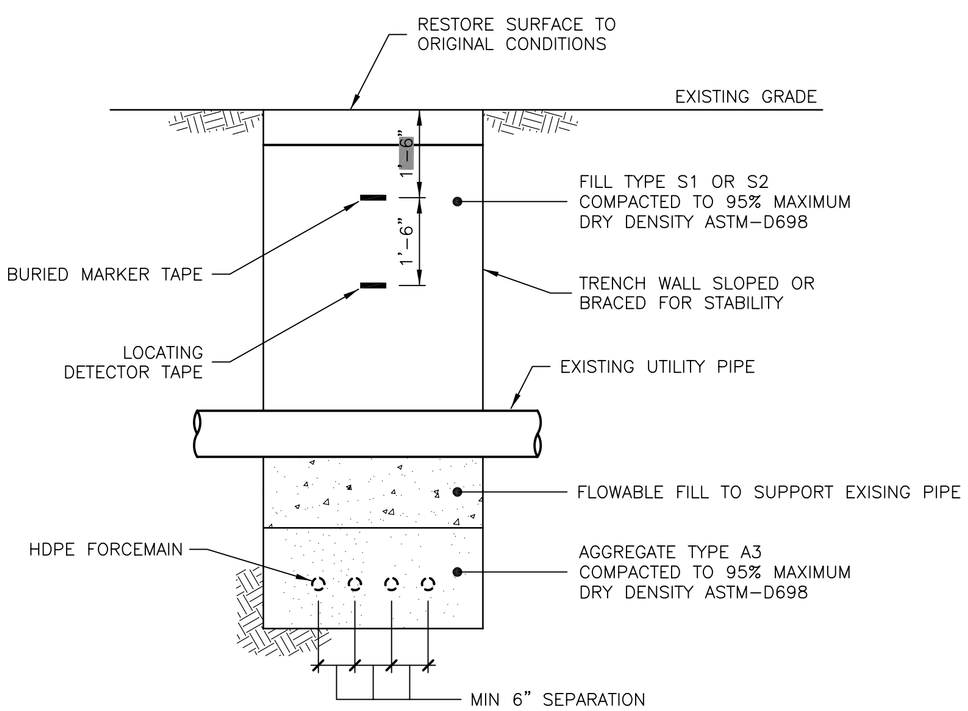

PIPE SUPPORT FOR EXISTING UTILITY
NTS

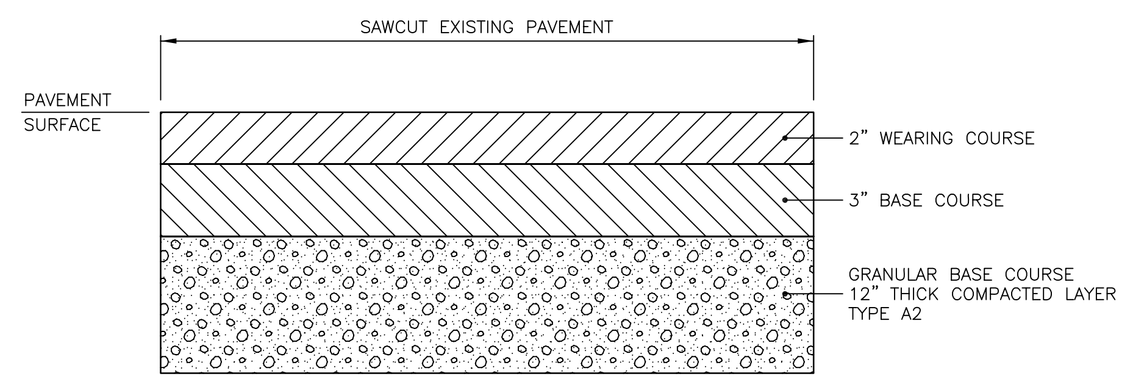

ROAD RESTORATION
NTS

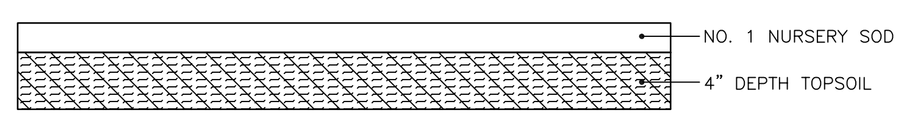

GRASSED AREA RESTORATION
NTS

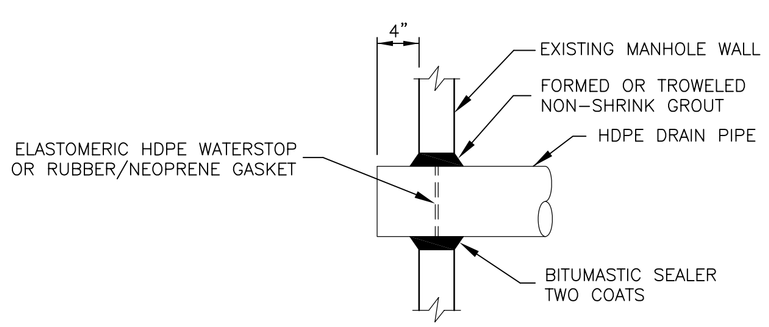

CONTRACTOR MAY USE A-LOK COMPRESSION TYPE FLEXIBLE CONNECTOR INSTALLED PER MANUFACTURER'S REQUIREMENTS

NEW SEWER CONNECTION TO EXISTING MANHOLE
NTS

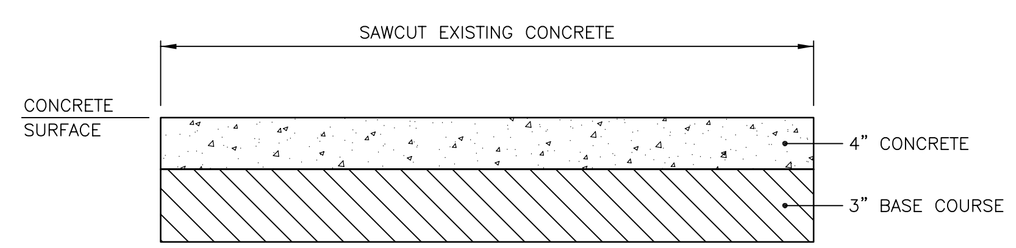

SIDEWALK RESTORATION
NTS

NOTES

1. TRENCH WITH THREE OR MORE PIPES SHALL BE SIMILAR TO THE TWO-PIPE TRENCH DETAIL SHOWN. EACH PIPE SHALL BE SEPARATED BY 6-INCH ON CENTER HORIZONTALLY. VERTICAL PIPE SEPARATION (DISTANCE BETWEEN INVERTS) SHALL BE 6-INCHES MINIMUM.
2. REFER TO MECHANICAL DRAWINGS FOR VALVE AND PIPING REQUIREMENTS.
3. REFER TO ELECTRICAL DRAWINGS FOR CONDUIT AND PULL BOX REQUIREMENTS.

DEMETRIOS KLERIDES
PROFESSIONAL ENGINEER
NEW JERSEY LICENSE NO. GE 40679

REV. NO.	DATE	DRWN	CHKD	REMARKS

DESIGNED BY: JVB
DRAWN BY: EJL
SHEET CHK'D BY: JVB
CROSS CHK'D BY: MP
APPROVED BY: DK
DATE: JUNE 2007

CDM
Camp Dresser & McKee
Raritan Plaza I, Raritan Center
Edison, New Jersey 08818
Tel: (732) 225-7000
consulting • engineering • construction • operations

U.S. ARMY CORPS OF ENGINEERS
KANSAS CITY DISTRICT

ROCKAWAY BOROUGH SUPERFUND SITE
EAST MAIN/WALL STREET PLUME REMEDIATION

FORCE MAIN/TRENCH DETAILS

PROJECT NO. 56540-6170
FILE NAME:
SHEET NO.
3

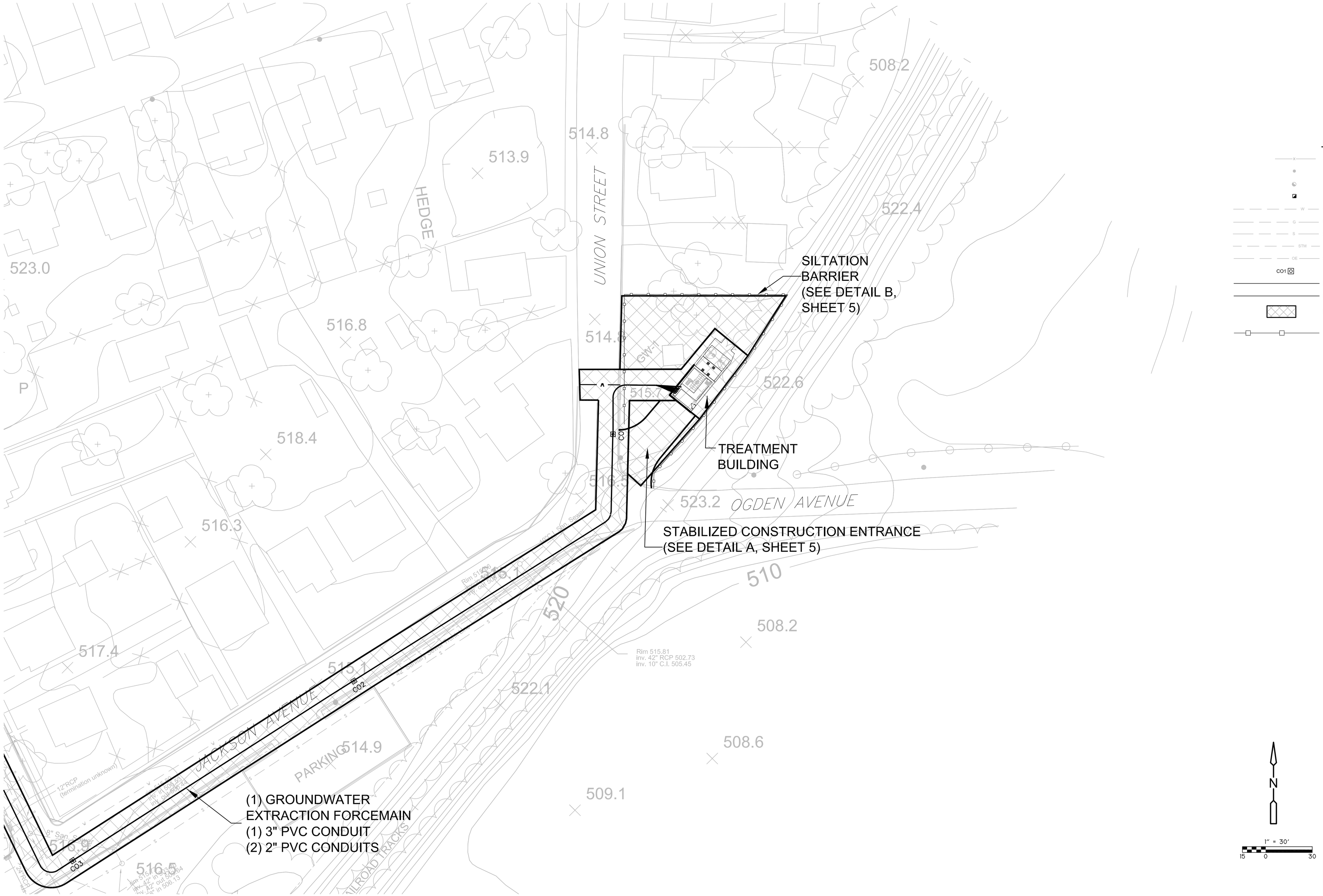

LEGEND

- FENCE LINE
- POWER POLE
- MONITORING WELL LOCATION
- EXTRACTION WELL LOCATION
- WATER LINE
- GAS LINE
- SANITARY SEWER LINE
- STORM SEWER
- OVERHEAD ELECTRICAL LINE
- CO1 CLEANOUT LOCATION
- NEW FORCEMAIN LINE
- NEW DISCHARGE LINE
- LIMITS OF DISTURBANCE
- SILTATION BARRIER

DEMETRIOS KLERIDES
PROFESSIONAL ENGINEER
NEW JERSEY LICENSE NO. GE 40679

REV. NO.	DATE	DRWN	CHKD	REMARKS

DESIGNED BY: JVB
DRAWN BY: EJL
SHEET CHK'D BY: JVB
CROSS CHK'D BY: MP
APPROVED BY: DK
DATE: JUNE 2007

CDM
Camp Dresser & McKee
Raritan Plaza I, Raritan Center
Edison, New Jersey 08818
Tel: (732) 225-7000
consulting • engineering • construction • operations

U.S. ARMY CORPS OF ENGINEERS
KANSAS CITY DISTRICT

ROCKAWAY BOROUGH SUPERFUND SITE
EAST MAIN/WALL STREET PLUME REMEDIATION

SOIL EROSION AND SEDIMENT CONTROL PLAN
ENLARGED PLAN

PROJECT NO. 56540-6170
FILE NAME:
SHEET NO. **4**

SOIL EROSION AND SEDIMENT CONTROL NOTES

1. TRACT AREA: 5.89 ACRES.
2. AREA OF DISTURBANCE: 1.15 ACRES.
3. ALL SOIL EROSION AND SEDIMENT CONTROL PRACTICES WILL BE INSTALLED IN ACCORDANCE WITH THE STANDARDS FOR SOIL EROSION AND SEDIMENT CONTROL IN NEW JERSEY, AND WILL BE IN PLACE PRIOR TO ANY MAJOR SOIL DISTURBANCE, OR IN THEIR PROPER SEQUENCE AND MAINTAINED UNTIL PERMANENT PROTECTION IS ESTABLISHED.
4. ANY DISTURBED AREA THAT WILL BE LEFT EXPOSED FOR MORE THAN THIRTY (30) DAYS AND NOT SUBJECT TO CONSTRUCTION TRAFFIC SHALL IMMEDIATELY RECEIVE A TEMPORARY SEEDING. IF THE SEASON PROHIBITS TEMPORARY SEEDING, THE DISTURBED AREAS WILL BE MULCHED WITH STRAW OR HAY AND TACKED IN ACCORDANCE WITH THE NEW JERSEY STANDARDS. SEE NOTE 21 BELOW.
5. PERMANENT VEGETATION IS TO BE ESTABLISHED ON EXPOSED AREAS WITHIN TEN (10) DAYS AFTER FINAL GRADING. MULCH IS TO BE USED FOR PROTECTION UNTIL VEGETATION IS ESTABLISHED. SEE NOTE 22 BELOW.
6. IMMEDIATELY FOLLOWING INITIAL DISTURBANCE OR ROUGH GRADING. ALL CRITICAL AREAS (STEEP SLOPES, SANDY SOILS, WET CONDITIONS) SUBJECT TO EROSION WILL RECEIVE A TEMPORARY SEEDING IN ACCORDANCE WITH NOTE 21 BELOW.
7. TEMPORARY DIVERSION BERMS ARE TO BE INSTALLED ON ALL CLEARED ROADWAYS AND EASEMENT AREAS. SEE THE DIVERSION DETAIL.
8. PERMANENT SEEDING AND STABILIZATION TO BE IN ACCORDANCE WITH THE "STANDARDS FOR PERMANENT VEGETATIVE COVER FOR SOIL STABILIZATION COVER". SPECIFIED RATES AND LOCATIONS SHALL BE ON THE APPROVED SOIL EROSION AND SEDIMENT CONTROL PLAN.
9. THE SITE SHALL AT ALL TIMES BE GRADED AND MAINTAINED SO THAT ALL STORMWATER RUNOFF IS DIVERTED TO SOIL EROSION AND SEDIMENT CONTROL FACILITIES.
10. ALL SEDIMENTATION STRUCTURES (SILT FENCE, INLET FILTERS, AND SEDIMENT BASINS) WILL BE INSPECTED AND MAINTAINED DAILY.
11. STOCKPILES SHALL NOT BE LOCATED WITHIN 50' OF A FLOODPLAIN, SLOPE, DRAINAGE FACILITY, OR ROADWAY. ALL STOCKPILES BASES SHALL HAVE A SILT FENCE PROPERLY ENTRENCHED AT THE TOE OF SLOPE.
12. A STABILIZED CONSTRUCTION ACCESS WILL BE INSTALLED, WHENEVER AN EARTHEN ROAD INTERSECTS WITH A PAVED ROAD. SEE THE STABILIZED CONSTRUCTION ACCESS DETAIL AND CHART FOR DIMENSIONS.
13. ALL NEW ROADWAYS WILL BE TREATED WITH SUITABLE SUBBASE UPON ESTABLISHMENT OF FINAL GRADE ELEVATIONS.
14. PAVED ROADWAYS MUST BE KEPT CLEAN AT ALL TIMES.
15. BEFORE DISCHARGE POINTS BECOME OPERATIONAL, ALL STORM DRAINAGE OUTLETS WILL BE STABILIZED AS REQUIRED.
16. ALL DEWATERING OPERATIONS MUST BE DISCHARGED DIRECTLY INTO A SEDIMENT FILTER AREA. THE FILTER SHOULD BE COMPOSED OF A FABRIC OR APPROVED MATERIAL. SEE THE DEWATERING DETAIL.
17. ALL SEDIMENT BASINS WILL BE CLEANED WHEN THE CAPACITY HAS BEEN REDUCED BY 50%. A CLEAN OUT ELEVATION WILL BE IDENTIFIED ON THE PLAN AND A MARKER INSTALLED ON THE SITE.
18. DURING AND AFTER CONSTRUCTION, THE APPLICANT WILL BE RESPONSIBLE FOR THE MAINTENANCE AND UPKEEP OF THE DRAINAGE STRUCTURES, VEGETATION COVER, AND ANY OTHER MEASURES DEEMED APPROPRIATE BY THE DISTRICT. SAID RESPONSIBILITY WILL END WHEN COMPLETED WORK IS APPROVED BY THE MORRIS COUNTY SOIL CONSERVATION DISTRICT.
19. ALL TREES OUTSIDE THE DISTURBANCE LIMIT INDICATED ON THE SUBJECT PLAN OR THOSE TREES WITHIN THE DISTURBANCE AREA WHICH ARE DESIGNATED TO REMAIN AFTER CONSTRUCTION ARE TO BE PROTECTED WITH TREE PROTECTION DEVICES. SEE THE TREE PROTECTION DETAIL.
20. THE MORRIS COUNTY SOIL CONSERVATION DISTRICT MAY REQUEST ADDITIONAL MEASURES TO MINIMIZE ON SITE OR OFF SITE EROSION PROBLEMS DURING CONSTRUCTION.
21. THE MORRIS COUNTY SOIL CONSERVATION DISTRICT MUST BE NOTIFIED, IN WRITING, AT LEAST 72 HOURS PRIOR TO ANY LAND DISTURBANCE, AND A PRE-CONSTRUCTION MEETING HELD.
22. CONTRACTOR TO SET UP A MEETING WITH THE INSPECTOR FOR PERIODIC INSPECTIONS OF THE TEMPORARY SEDIMENT BASIN PRIOR TO AND DURING ITS CONSTRUCTION.
23. TOPSOIL STOCKPILE PROTECTION
    - A) APPLY GROUND LIMESTONE AT A RATE OF 90 LBS PER 1000 SQ. FT.
    - B) APPLY FERTILIZER (10-20-10) AT A RATE OF 11 LBS. PER 1000 SQ. FT.
    - C) APPLY PERENNIAL RYEGRASS SEED AT 1 LB. PER 1000 SQ. FT. AND ANNUAL RYEGRASS AT 1 LB. PER 1000 SQ. FT.
    - D) MULCH STOCKPILE WITH STRAW OR HAY AT A RATE OF 90 LBS. PER 1000 SQ. FT.
    - E) APPLY A LIQUID MULCH BINDER OR TACK TO STRAW OR HAY MULCH.
    - F) PROPERLY ENTRENCH A SILT FENCE AT THE BOTTOM OF THE STOCKPILE.
24. TEMPORARY STABILIZATION SPECIFICATIONS
    - A) APPLY GROUND LIMESTONE AT A RATE OF 90 LBS PER 1000 SQ. FT.
    - B) APPLY FERTILIZER (10-20-10) AT A RATE OF 11 LBS. PER 1000 SQ. FT.
    - C) APPLY PERENNIAL RYEGRASS SEED AT 1 LB. PER 1000 SQ. FT. AND ANNUAL RYEGRASS AT 1 LB. PER 1000 SQ. FT.
    - D) MULCH STOCKPILE WITH STRAW OR HAY AT A RATE OF 90 LBS. PER 1000 SQ. FT.
    - E) APPLY A LIQUID MULCH BINDER OR TACK TO STRAW OR HAY MULCH.
25. PERMANENT STABILIZATION SPECIFICATIONS
    - A) APPLY TOPSOIL TO A DEPTH OF 5 INCHES (UNSETTLED).
    - B) APPLY GROUND LIMESTONE AT A RATE OF 90 LBS PER 1000 SQ. FT. AND WORK FOUR INCHES INTO SOIL.
    - C) APPLY FERTILIZER (10-20-10) AT A OF RATE 11 LBS. PER 1000 SQ. FT.
    - D) APPLY HARD FESCUE SEED AT 2.7 LBS. PER 1000 SQ. FT. AND CREEPING RED FESCUE SEED AT 0.7 LBS PER 1000 SQ. FT. AND PERENNIAL RYEGRASS SEED AT 0.25 LBS PER 1000 SQ. FT.
    - E) MULCH STOCKPILE WITH STRAW OR HAY AT A RATE OF 90 LBS. PER 1000 SQ. FT.
    - F) APPLY A LIQUID MULCH BINDER OR TACK TO STRAW OR HAY MULCH.
26. THE CONTRACTOR SHALL PREPARE A PLAN FOR THE PROPER DEWATERING OF EACH STREAM CROSSING PRIOR TO EXCAVATING THE STREAM BED. PLAN SHALL BE FORWARDED TO THE ENGINEER AND MORRIS COUNTY SOIL CONSERVATION DISTRICT FOR APPROVAL. THE DISTRICT SHALL BE NOTIFIED FOR INSPECTION PRIOR TO EACH STREAM CROSSING CONSTRUCTION.
27. ANY AREAS USED FOR THE CONTRACTOR'S STAGING, INCLUDING BUT NO LIMITED TO, TEMPORARY STORAGE OF STOCKPILED MATERIALS (e.g. CRUSHED STONE, QUARRY PROCESS STONE, SELECT FILL, EXCAVATED MATERIALS, ETC.), SHALL BE ENTIRELY PROTECTED BY A SILT FENCE ALONG THE LOW ELEVATION SIDE TO CONTROL SEDIMENT RUNOFF. PRIOR TO CONSTRUCTION, THE CONTRACTOR SHALL BE RESPONSIBLE FOR NOTIFYING THE MORRIS COUNTY SOIL CONSERVATION DISTRCIT OF ANY STAGING AND/OR STOCKPILE LOCATION AREAS AND FOR OBTAINING A SOIL EROSION AND SEDIMENT CONTROL CERTIFICATION FOR THESE AREAS.
28. A CRUSHED STONE, VEHICLE WHEEL-CLEANING BLANKET SHALL BE INSTALLED AT THE CONTRACTOR'S STAGING YARD AND/OR STOCKPILE AREAS TO PREVENT OFF-SITE TRACKING OF THE SEDIMENT BY CINSTRUCTION VEHICLES ONTO PUBLIC ROADS. BLANKET SHALL BE 15 ft. x 50 ft. x 6 IN. (MINIMUM), CRUSHED STONE 2-1/2 INCHES IN DIAMETER. SAID BLANKET SHALL BE UNDERLAIN WITH A SUITABLE SYNTHETIC SEDIMENT FILTER FABRIC AND MAINTAINED IN GOOD ORDER.

GENERAL SEQUENCE OF CONSTRUCTION

THE FOLLOWING IS A BASIC OUTLINE OF THE GENERAL SEQUENCE OF CONSTRUCTION FOR THE PROJECT:

1. ESTABLISH LIMITS OF WORK, INSTALL SILTATION CONTROL BARRIERS AND CONSTRUCT STABILIZED CONSTRUCTION ENTRANCE.
2. REMOVE, DEMOLISH, AND/OR RELOCATE EXISTING ON-SITE STRUCTURES, UTILITIES AND TREES.
3. STRIP AND STOCKPILE TOPSOIL AND STABILIZE AS REQUIRED.
4. PERFORM EARTHWORK INCLUDING ALL EXCAVATION, CUTTING, AND FILLING.
5. PERFORM TEMPORARY SOIL STABILIZATION AND MAINTENANCE ON ALL SOIL EROSION AND SEDIMENT CONTROL DEVICES.
6. CONSTRUCT FORCE MAIN AND APPURTENANCES TO INCLUDE FINAL GRADING, LOAMING, AND HYDROSEEDING.
7. REMOVE ALL CONSTRUCTION DEBRIS, TEMPORARY FACILITIES, AND SOIL EROSION AND SEDIMENT CONTROL DEVICES.

SPECIFICATIONS

A. SILT FENCE

1. POSTS SHALL BE CONSTRUCTED OF HARDWOOD WITH A MINIMUM DIAMETER THICKNESS OF 1½" INCHES.
2. A METAL FENCE WITH 6 INCH OR SMALLER OPENINGS AND AT LEAST 2 FEET HIGH MAY BE UTILIZED, FASTENED TO THE FENCE POSTS, TO PROVIDE REINFORCEMENT AND SUPPORT TO THE GEOTEXTILE FABRIC WHERE SPACE FOR OTHER PRACTICES IS LIMITED AND HEAVY SEDIMENT LOADING IS EXPECTED.
3. A GEOTEXTILE FABRIC, RECOMMENDED FOR SUCH USE BY THE MANUFACTURER, SHALL BE BURIED AT LEAST 6 INCHES DEEP IN THE GROUND. THE FABRIC SHALL EXTEND AT LEAST 2 FEET ABOVE THE GROUND. THE FABRIC MUST BE SECURELY FASTENED TO THE POSTS USING A SYSTEM CONSISTING OF METAL FASTENERS (NAILS OR STAPLES) AND A HIGH STRENGTH REINFORCEMENT MATERIAL (NYLON WEBBING, GROMMETS, WASHERS ETC.) PLACED BETWEEN THE FASTENING SYSTEM SHALL RESIST TEARING AWAY FROM THE POST. THE FABRIC SHALL INCOPORATE A DRAWSTRING IN THE TOP PORTION OF THE FENCE FOR ADDED STRENGTH.

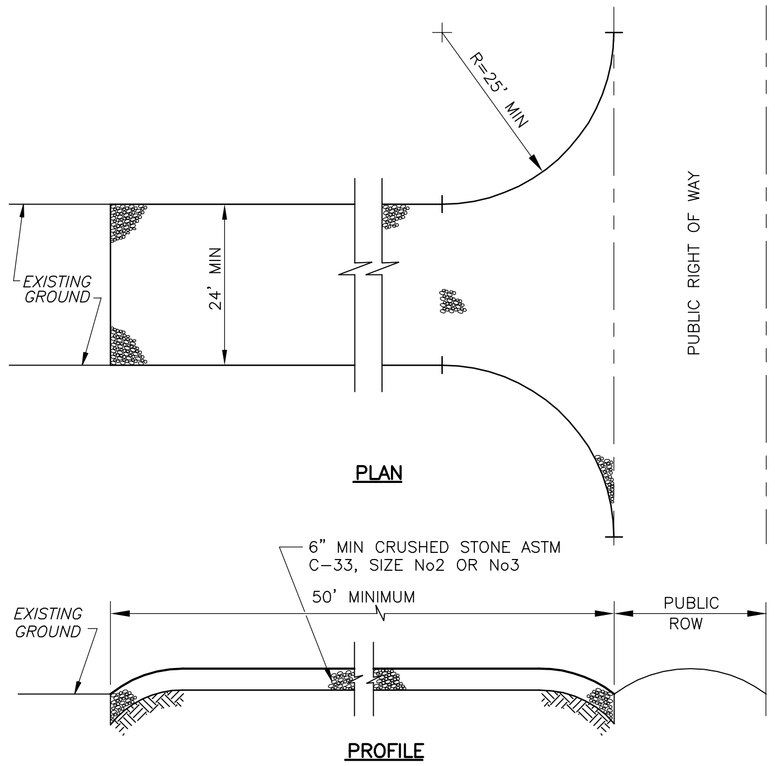

NOTES:
1. PROVIDE APPROPRIATE TRANSITION BETWEEN STABILIZED CONSTRUCTION ENTRANCE AND PUBLIC RIGHT-OF-WAY.
2. THE ENTRANCE SHALL BE MAINTAINED IN A CONDITION WHICH WILL PREVENT TRACKING OR FLOWING OF SEDIMENT ONTO PUBLIC RIGHT-OF-WAY THIS MAY REQUIRE PERIODIC TOP DRESSING WITH ADDITIONAL STONE OR ADDITIONAL LENGTH AS CONDITIONS DEMAND AND REPAIR AND/OR CLEANOUT OF ANY MEASURES USED TO TRAP SEDIMENT. ALL SEDIMENT SPILLED, DROPPED, WASHED, OR TRACKED ONTO PUBLIC RIGHT-OF-WAY MUST BE REMOVED IMMEDIATELY

STABILIZED CONSTRUCTION ACCESS

DETAIL A
NTS

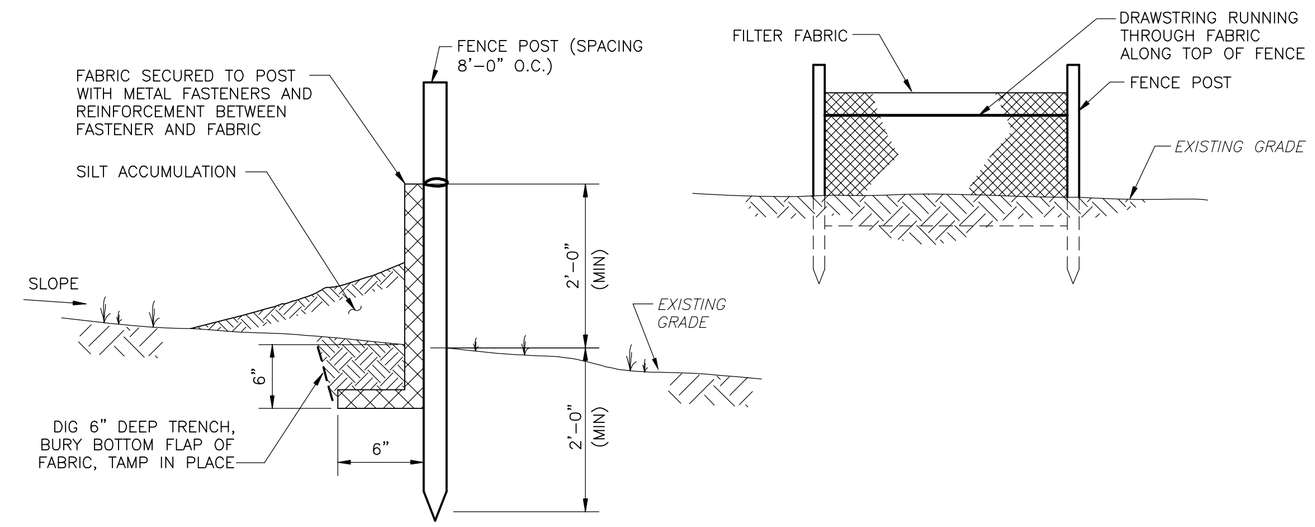

NOTE:
1. ALL SILT FENCE WILL BE INSPECTED AND REMEDIAL MAINTENANCE PERFORMED BY THE CONTRACTOR WITHIN 24 HOURS AFTER EACH RAIN.

SILTATION CONTROL BARRIER

DETAIL B
NTS

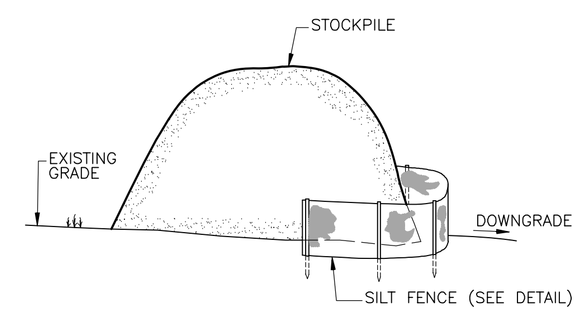

NOTE:
1. SEED IMMEDIATELY AFTER STOCKPILING.

TEMPORARY SOIL STOCKPILE

DETAIL D
NTS

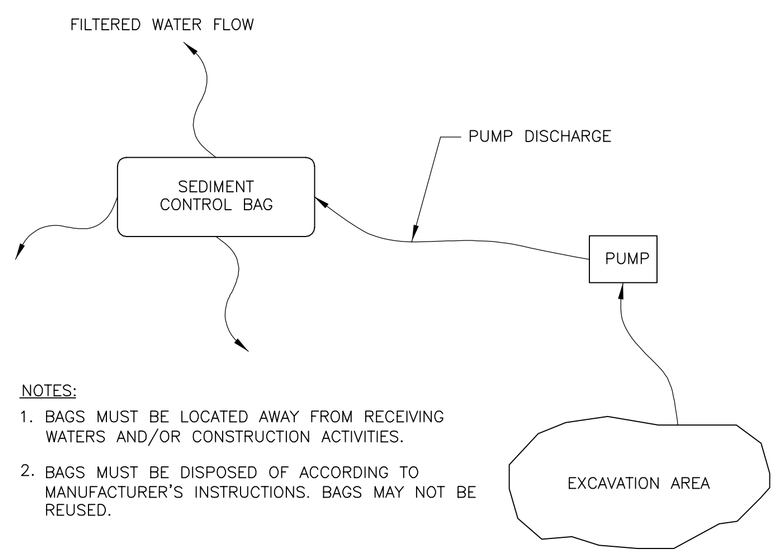

NOTES:
1. BAGS MUST BE LOCATED AWAY FROM RECEIVING WATERS AND/OR CONSTRUCTION ACTIVITIES.
2. BAGS MUST BE DISPOSED OF ACCORDING TO MANUFACTURER'S INSTRUCTIONS. BAGS MAY NOT BE REUSED.

SEDIMENT CONTROL BAG FOR DEWATERING

DETAIL C
NTS

NOTES:
1. PROVIDE BARRICADE AROUND EXISTING TREES TO REMAIN.
2. REMOVE AT PROJECT COMPLETION.
3. BARRIER TO BE EXTENDED TO DRIPLINE IN RURAL AREAS AND CURBLINE IN URBAN AREAS.

DEMETRIOS KLERIDES
PROFESSIONAL ENGINEER
NEW JERSEY LICENSE NO. GE 40679

REV. NO.	DATE	DRWN	CHKD	REMARKS

DESIGNED BY: JVB
DRAWN BY: EJL
SHEET CHK'D BY: JVB
CROSS CHK'D BY: MP
APPROVED BY: DK
DATE: JUNE 2007

CDM
Camp Dresser & McKee
Raritan Plaza I, Raritan Center
Edison, New Jersey 08818
Tel: (732) 225-7000
consulting • engineering • construction • operations

U.S. ARMY CORPS OF ENGINEERS
KANSAS CITY DISTRICT

ROCKAWAY BOROUGH SUPERFUND SITE
EAST MAIN/WALL STREET PLUME REMEDIATION

SOIL EROSION AND SEDIMENT CONTROL NOTES AND DETAILS I

PROJECT NO. 56540-6170
FILE NAME:
SHEET NO. 5

J:\56540\6170\CIVL\ C13 08/02/07 14:12 larsonej XREFS: CDM_2234

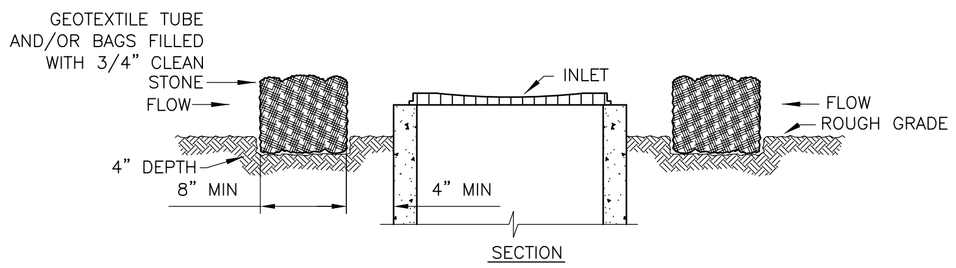

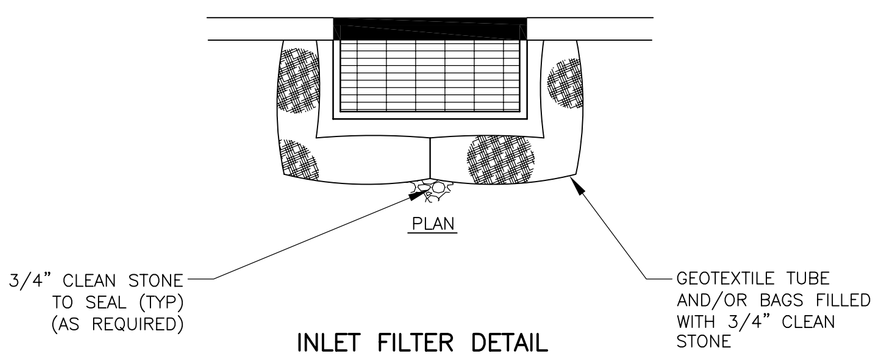

INLET FILTER DETAIL

DETAIL A

NTS

INSTALLATION NOTES

1. GEOTEXTILE TO BE WOVEN POLYPTOPYLENE PRODUCT 117F, BY SYNTHETIC INDUSTRIES INC., OR TERRATEX SC, BY WEBTECT INC., OR APPROVED EQUAL.

2. 3/4" CLEAN STONE CORE SHALL BE COMPLETELY CONTAINED WITHIN GEOTEXTILE. SEAMS SHALL BE SEWN OR CLOSED BY SUITABLE MECHANICAL MEANS TO PREVENT LEAKAGE OF STONE.

3. WHERE NO CURB IS PRESENT, BARRIER SHALL COMPLETELY ENCIRCLE THE DRAIN INLET.

4. INLET GRATE OPENING IS TO BE KEPT CLEAR OF OBSTRUCTIONS AT ALL TIMES.

5. THE PROTECTION DEVICE WILL BE DESIGNED TO CAPTURE OR FILTER RUNOFF FROM 1 YEAR, 24 HOUR STORM EVENT AND SHALL SAFELY CONVEY HIGHER FLOWS DIRECTLY INTO THE STORM SEWER SYSTEM. WHERE SLOPE REQUIRES, AN EARTHEN BERM SHALL BE INSTALLED TO DIRECT STORM FLOW INTO THE INLET, BUT NOT OVER THE CURB.

6. OTHER METHODS THAT ACCOMPLISH THE PURPOSE OF STORM SEWER INLET PROTECTION MAY BE USED IF APPROVED BY THE SOIL CONSERVATION DISTRICT.

7. INSPECTIONS SHALL BE FREQUENT. MAINTENANCE, REPAIR, AND REPLACEMENT SHALL BE MADE PROMPTLY, AS NEEDED. THE BARRIER SHALL BE REMOVED WHEN THE AREA DRAINING TOWARDS THE INLET HAS BEEN STABILIZED.

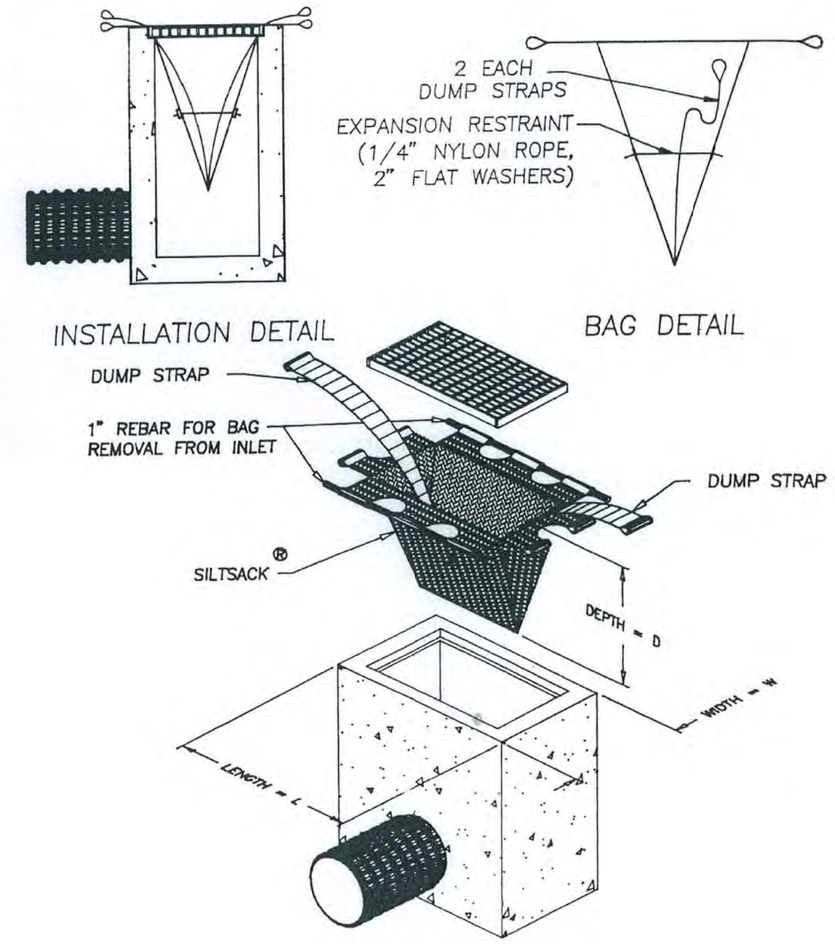

STREET INLET FILTER DETAIL

DETAIL B

NTS

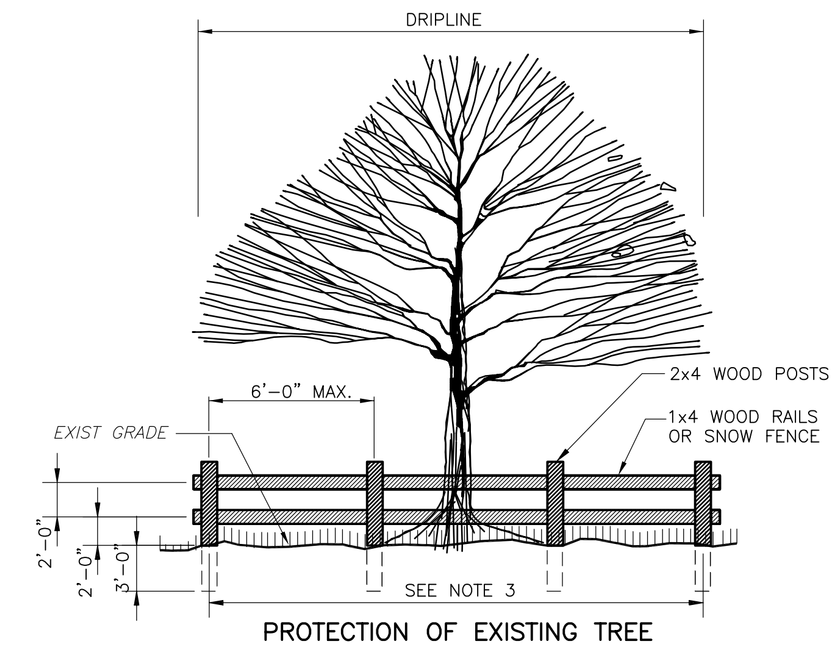

PROTECTION OF EXISTING TREE

DETAIL C

NTS

DEMETRIOS KLERIDES
PROFESSIONAL ENGINEER
NEW JERSEY LICENSE NO. GE 40679

REV. NO.	DATE	DRWN	CHKD	REMARKS

DESIGNED BY: JVB
DRAWN BY: EJL
SHEET CHK'D BY: JVB
CROSS CHK'D BY: MP
APPROVED BY: DK
DATE: JUNE 2007

CDM
Camp Dresser & McKee
Raritan Plaza I, Raritan Center
Edison, New Jersey 08818
Tel: (732) 225-7000
consulting • engineering • construction • operations

U.S. ARMY CORPS OF ENGINEERS
KANSAS CITY DISTRICT

ROCKAWAY BOROUGH SUPERFUND SITE
EAST MAIN/WALL STREET PLUME REMEDIATION

SOIL EROSION AND SEDIMENT CONTROL NOTES AND DETAILS II

PROJECT NO. 56540-6170
FILE NAME:
SHEET NO. 6

J:\56540\6170\CIVL\ FIG 6 06/06/07 17:24 larsonej XREFS: CDM_2234

Dust Control Notes

The following methods should be considered for controlling dust:

Mulches - See Standard for Stabilization with Mulches Only (pg. 5-1)

Vegetative Cover - See Standard for Temporary Vegetative Cover (pg. 7-1), Permanent Vegetative Cover for Soil Stabilization (pg. 4-1), and Permanent Stabilization with Sod (pg. 6-1)

Spray-On Adhesives - On mineral soils (not effective on muck soils). Keep traffic off these areas.

Table 16-1: Dust Control Materials

MATERIAL	WATER DILUTION	TYPE OF NOZZLE	APPLY GALLONS/ACRE
Anionic asphalt emulsion	7:1	Coarse Spray	1200
Latex emulsion	12.5:1	Fine Spray	235
Resin in water	4:1	Fine Spray	300
Polyacrylamide (PAM) - spray on Polyacrylamide (PAM) - dry spray	Apply according to manufacturer's instructions. May also be used as an additive to sediment basins to flocculate and precipitate suspended colloids. See Sediment Basin standard (pg. 26-1)		
Acidulated Soy Bean Soap Stick	None	Coarse Spray	1200

Tillage - To roughen surface and bring clods to the surface. This is a temporary emergency measure which should be used before soil blowing starts. Begin plowing on windward side of site. Chisel-type plows spaced about 12 inches apart, and spring-toothed harrows are examples of equipment which may produce the desired effect.

Sprinkling - Site is sprinkled until the surface is wet.

Barriers - Solid board fences, snow fences, burlap fences, crate walls, bales of hay, and similar material can be used to control air currents and soil blowing.

Calcium Chloride - Shall be in the form of loose, dry granulates of flakes fine enough to feed through commonly used spreaders at a rate that will keep surface moist but not cause pollution or plant damage. If used on steeper slopes, then use other practices to prevent washing into streams, or accumulation around plants.

Stone - Cover surface with crushed stone or coarse gravel.

MORRIS COUNTY SOIL CONSERVATION DISTRICT
APPLICATION FOR SOIL EROSION AND SEDIMENT CONTROL PLAN CERTIFICATION

Tab 6 – Specifications

Specification Section 2020; Dewatering

Specification Section 2200; Site Preparation

Specification Section 2316; Fill

Specification Section 2317; Excavation

Specification Section 2318; Trenching

Specification Section 2540; Erosion and Sedimentation Control

Specification Section 2721; Aggregate Base Course

Specification Section 2740; Flexible Pavement

Specification Section 2921; Seeding

SECTION 2020

DEWATERING

PART 1: GENERAL

1.01 GENERAL

The dewatering of all areas where work must be performed under this Contract is the responsibility of the CONTRACTOR and no additional sum will be allowed for any dewatering operation, overtime, equipment rental or any other expense incurred due to the occurrence of ground water, surface water or water from possible leakage of existing buildings, structures and piping in the vicinity of the CONTRACTOR'S operations.

Should water be encountered, the CONTRACTOR shall furnish and operate suitable pumping equipment of such capacity adequate to dewater the trench. The trench shall be sufficiently dewatered so that the laying and joining of the pipe is made in the dry. The CONTRACTOR shall convey all trench water to a natural drainage channel or storm sewer without causing any property damage and in strict accordance with state and/or local requirements. Trenches shall remain in a dewatered state until backfilling has been completed.

Disposal of silt and debris which accumulates during construction shall be performed in strict accordance with state and/or local requirements.

1.02 PERMITS

In accordance with NJAC 7:19-2.17(b)2, the CONTRACTOR shall be responsible for submitting Form BWA-005: Dewatering Permit-By-Rule (See Appendix B) to NJDEP for approval. Payment of applicable fees associated with dewatering activities will be the responsibility of the OWNER.

1.03 EQUIPMENT

The CONTRACTOR shall note that the project is to be constructed through residential areas. The CONTRACTOR will be expected to utilize silent generators with electric pumps or other quiet pumps to minimize noise during non-working hours. To the maximum extent possible, the CONTRACTOR shall minimize the use of dewatering pumps during non-working hours.

END OF SECTION

SECTION 02200

SITE PREPARATION

PART 1 GENERAL

1.1 SECTION INCLUDES

A. Removal and disposal of surface debris.

B. Removal and disposal of paving, curbs, and sidewalks.

C. Clearing and grubbing.

1.2 REFERENCES

A. Section 01400 - Quality Requirements: Requirements for references.

B. American Society for Testing and Materials (ASTM): D698 - Test Method for Laboratory Compaction Characteristics of Soil Using Standard Effort (12,400 ft-lbf/ft^3 (600 kN-m/m^3)).

1.3 DEFINITIONS

A. Clearing: Felling, trimming, and cutting of trees into sections and the satisfactory disposal of trees and other vegetation designated for removal, including down timber, snags, brush, and rubbish occurring in the areas to be cleared.

B. Grubbing: Removal and disposal of stumps, roots larger than 3 inches in diameter, and matted roots from the designated grubbing areas.

C. SMDD: Standard Maximum Dry Density and in the context of this Contract means the maximum dry unit weight determined in accordance with ASTM D698.

1.4 REGULATORY REQUIREMENTS

A. Conform to applicable State and local codes for disposal of debris.

B. Coordinate clearing work with utility companies and municipal authorities.

1.5 ENVIRONMENTAL REQUIREMENTS

A. Section 01500 - Temporary Facilities and Controls: Requirements for temporary controls.

B. Control the amount of dust resulting from operations to avoid creation of a nuisance in the surrounding area.

PART 2 PRODUCTS (NOT USED)

PART 3 EXECUTION

3.1 EXAMINATION

A. Section 01700 - Execution Requirements: Requirements for examination.

B. Verify that existing plant life or other surface features designated to remain are tagged or identified.

3.2 PREPARATION

A. Protect trees, plant growth, utilities, and surface features designated to remain from damage incident to clearing, grubbing, and construction operations by the erection of fencing or by such other means as circumstances require. For trees, erect fencing at the drip line.

3.3 CLEARING AND GRUBBING

A. Clear areas required for access to the Site and execution of the Works.

B. Cut off trees, stumps, roots, brush, and other vegetation in areas to be cleared, flush with or below the original ground surface, except such trees and vegetation as shown on the Drawings or directed by ENGINEER to be left standing.

C. Trim trees, designated to be left standing within the cleared areas, of dead branches 1 1/2 inches or more in diameter, and branches to the heights shown on the Drawings or directed by ENGINEER.

D. Neatly cut limbs and branches to be trimmed close to the bole of the tree or main branches.

E. Paint cuts more than 1 1/2 inch diameter with an approved tree-wound paint.

F. Remove and dispose of structures that obtrude, encroach upon, or otherwise obstruct work.

G. Protect trees and shrubs by minimizing grubbing along Maple Avenue, Halsey Avenue, Jackson Avenue, and associated work areas.

H. When directed by ENGINEER, remove trees and stumps that are designated as trees from areas outside those areas designated for clearing and grubbing; fell such trees, remove their stumps and roots, and dispose of the trees.

I. Clear undergrowth and deadwood, without disturbing subsoil.

J. Remove material to be grubbed, together with logs and other organic or non-organic debris not suitable for reuse, to a depth of not less than 18 inches below the original surface level of the ground in areas shown on the Drawings to be grubbed and in areas as directed by ENGINEER or

as shown on the Drawings as construction areas under this Contract, such as areas for buildings and areas to be paved.

K. Fill depressions made by grubbing with soil Type S1 (see Section 2316) and compact to minimum 95 percent SMDD to make the surface conform with the original adjacent surface of the ground.

L. Remove debris, rock, and extracted plant life.

M. Partially remove paving, curbs, and sidewalks as required within construction work areas shown on the Drawings. Neatly saw cut edges at right angles to surface.

N. Dispose of trees, logs, stumps, roots, brush, rotten wood, and other refuse from the clearing and grubbing and Site preparation operations. Provide certification of disposal for materials removed from the Site.

PART 4 MEASUREMENT AND PAYMENT

4.1 GENERAL

A. Section 01200 - Price and Payment Procedures: Requirements for measurement and payment.

B. Payment Basis: No separate payment will be made. This section forms part of the lump sum price associated with the mobilization portion of the project.

END OF SECTION

SECTION 02316

FILL

PART 1 GENERAL

1.1 SECTION INCLUDES

A. Building perimeter backfilling to subgrade elevations.

B. Fill for collection trench.

C. Site filling and backfilling.

D. Fill for over-excavation.

E. Compaction as scheduled.

1.2 REFERENCES

A. Section 01400 - Quality Requirements: Requirements for references.

B. American Society for Testing and Materials (ASTM):

1. C117 - Standard Test Method for Materials Finer than 75-μm (No. 200) Sieve in Mineral Aggregates by Washing.

2. C136 - Standard Test Method for Sieve Analysis of Fine and Coarse Aggregates.

3. D422 - Standard Test Method for Particle-Size Analysis of Soils.

4. D698 - Test Method for Laboratory Compaction Characteristics of Soil Using Standard Effort (12,400 ft-lbf/ft^3 (600 kN-m/m^3)).

5. D2216 - Standard Test Method for Laboratory Determination of Water (Moisture) Content of Soil and Rock.

6. D2487 - Standard Classification of Soils For Engineering Purposes (Unified Soil Classification System).

7. D2922 - Standard Test Methods for Density of Soil and Soil-Aggregate in Place by Nuclear Methods (Shallow Depth).

8. D3017 - Standard Test Method for Water Content of Soil and Rock in Place by Nuclear Methods (Shallow Depth).

C. State of New Jersey Department of Transportation Standard Specifications for Road and Bridge Construction.

D. United States Environmental Protection Agency (USEPA): SW-846 - Test Methods for Evaluating Solid Wastes, Physical/Chemical Methods, Third Edition and Promulgated Updates I-III, November 1986.

1.3 DEFINITIONS

A. SMDD: Standard Maximum Dry Density and in the context of this Contract means the maximum dry unit weight determined in accordance with ASTM D698.

B. 'State Standard' in this Section shall mean State of New Jersey Department of Transportation Standard Specifications for Road and Bridge Construction.

1.4 PROGRESS SUBMITTALS

A. Section 01300 - Administrative Requirements: Requirements for progress submittals.

B. Materials Sources: Submit name of proposed imported soil materials sources at least 14 days prior to commencing transport of materials to the Site.

C. Geotechnical and Chemical Data: At least 7 days prior to commencing transport of materials to the Site, submit geotechnical data for source testing as specified in Article 2.4 for each type of soil materials.

D. Independent Geotechnical and Analytical Testing Firm: At least 14 days prior to commencing transport of soil materials to the Site, submit the name and qualifications of the independent testing firms proposed by CONTRACTOR to provide testing services for work of this Section.

E. Suppliers' Certificates: Submit certificate indicating that each type of soil materials meets or exceeds specified requirements.

F. Weigh Tickets: Submit at the start of the work day following delivery weigh tickets generated at CONTRACTOR's weigh scale of soil delivered to the Site.

G. Weigh Scale Calibration: Submit no later than 7 days prior to commencing transport of materials to the Site a calibration chart, completed within the previous 6 months, for weigh scale. Weigh scale shall be calibrated by the State of New Jersey agency.

H. Field Quality Control: Submit field data on same day testing performed. Submit laboratory data within 24 hours of completion of test.

1.5 QUALITY ASSURANCE

A. Perform work of this Section in accordance with State Standards.

1.6 ENVIRONMENTAL REQUIREMENTS

A. Section 01500 - Temporary Facilities and Controls: Requirements for temporary controls.

B. Suspend operations whenever climatic conditions, as determined by ENGINEER, are unsatisfactory for placing fill to the requirements of this Section.

C. After occurrence of heavy rains, do not operate equipment on previously placed material or on approved surfaces until the material has dried sufficiently to prevent occurrence of excessive rutting.

D. Do not place fill in a frozen state or against frozen surfaces or frozen previously placed material. Do not place fill on snow, ice, water, or other objectionable material or on improperly prepared surfaces or previously placed material.

E. Where surfaces or previously placed material have been softened or eroded, remove soft and yielding material or otherwise objectionable or damaged areas and replace with compacted fill as specified by ENGINEER.

F. Under no circumstances shall pipe be installed in water. Pipe shall not be installed when, in the opinion of the Contacting Officer, the trench conditions or weather are unsuitable for such work. Contractor shall be fully responsible for dewatering and drainage of trenches during construction.

PART 2 PRODUCTS

2.1 GENERAL

A. Imported from an approved source.

B. Free of unsuitable materials including:

1. Frozen material or material containing snow or ice.

2. Trees, stumps, branches, roots, or other wood or lumber.

3. Wire, steel, cast iron, cans, drums, or other foreign material.

4. Materials containing hazardous or toxic constituents at hazardous or toxic concentrations.

5. Organic material, recycled material, broken concrete, masonry, rubble, asphalt pavement, rubbish, contaminated materials, stones larger than 2 inches or other unsuitable materials.

C. Compactable to specified density at specified moisture content.

2.2 COMMON FILL

A. Type S1: Approved native backfill, free of rocks larger than 4 inches.

B. Type S2: Approved imported backfill, free of rocks larger than 2 inches, organic matter, very soft clays, swelling clays, or fine uniform sands that may be difficult to compact.

1. Grain size distribution within the following limits:

Sieve Size	*Percent Passing by Weight*
2 inch	100
1 inch	85 to 100
3/4 inch	75 to 100
3/8 inch	65 to 95
No. 4	60 to 95
No. 10	50 to 90
No. 20	40 to 80
No. 40	30 to 70
No. 60	20 to 60
No. 140	10 to 40
No. 200	8 to 30

2.3 COARSE AGGREGATE

A. Type A1 Granular Bedding and Fill (Pea Gravel): Natural stone; washed free of clay, shale; graded in accordanee with ASTM C136 and ASTM C117 to the following limits:

1. Minimum Size: 1/4 inch.

2. Maximum Size: 5/8 inch.

B. Granular Backfill: Section 02721 Type A2.

2.4 SOURCE QUALITY CONTROL

A. Section 01400 - Quality Requirements: Requirements for source testing and analysis of soil material.

B. Testing and Analyses of Common Fill Type S1:

1. Maximum Dry Density and Optimum Moisture Content, ASTM D698: 1 sample per 5,000 cu yd, or portion thereof, of material required.

2. In-place Moisture Content, ASTM D2216: 1 sample per 5,000 cu yd, or portion thereof, of material required.

3. Grain Size, ASTM D422: 1 sample per 5,000 cu yd, or portion thereof, of material required.

4. Soil Classification, ASTM D2487: 1 sample per 5,000 cu yd, or portion thereof, of material required.

C. Testing and Analyses of Common Fill Type S2:

1. Maximum Dry Density and Optimum Moisture Content, ASTM D698: 1 sample per 5,000 cu yd, or portion thereof, of material required.

2. In-place Moisture Content, ASTM D2216: 1 sample per 5,000 cu yd, or portion thereof, of material required.

3. Grain Size, ASTM D422: 1 sample per 5,000 cu yd, or portion thereof, of material required.

4. Soil Classification, ASTM D2487: 1 sample per 5,000 cu yd, or portion thereof, of material required.

5. Chemical Analysis: 1 sample per 5,000 cu yd, or portion thereof, of material required. In accordance with Paragraph 2.4 E.

D. Testing and Analysis of Aggregate Type A1:

1. Maximum Dry Density and Optimum Moisture Content, ASTM D698: 1 sample per 2,000 cu yd, or portion thereof, of material required.

2. Grain Size, ASTM C117 and C136: 1 sample per 2,000 cu yd, or portion thereof, of material required.

E. Chemical characterization in the laboratory in accordance with the following methods:

Parameter	*Extraction/Preparation*(1)	*Analysis*(1)
TCL(2) Volatile Organic Compound	5035	8260B
TCL Semi-Volatile Organic Compound	3540C/3550B	8270C
Pesticide	3540C/3550B	8081A
PCB	3540C/3550B	8082
Herbicides	3540C/3550B	8151A
TAL(3) Metals	3050B or 3051	6010B/7000 Series
Cyanide	9013	9010 or 9012A

Notes:

(1) USEPA SW-846.
(2) TCL - Target Compound List.
(3) TAL - Target Analyte List.

F. All offsite soils brought on-site shall be tested by Contractor to ensure they are free from chemical contamination. Sample data shall be sufficient to demonstrate that topsoil and backfill materials do not contain contaminants in concentrations, which will exceed NJDEP commercial direct contact and impact to groundwater criteria (as per criteria listed in N.J.A.C. 7:26D, (Residential Direct Contact Soil Cleanup Criteria and Non-Residential Direct Contact Soil cleanup Criteria), change material or material source and retest. Testing of backfill shall demonstrate that the same is free of radiological contamination and/or above site is backgrounds in accordance with NJAC 7:28-12.

G. Provide materials of each type from the same source throughout the Works.

H. In the event of changes to approved sources of materials during the performance of the Works, immediately advise ENGINEER of revised locations and obtain approval of such locations and materials prior to use in the Works.

PART 3 EXECUTION

3.1 EXAMINATION

A. Section 01700 - Execution Requirements: Requirements for examination.

B. Verify subdrainage, dampproofing, or waterproofing installation has been inspected.

C. Verify structural ability of unsupported walls to support loads imposed by the fill.

D. Do not allow or cause any of the work performed or installed to be covered up or enclosed by work of this Section prior to required inspections, measurements, tests, or approvals.

E. Obtain approval from ENGINEER for completed excavations and previously placed material prior to placement of successive lifts.

F. Obtain approval from ENGINEER prior to placing fill against structures or around exposed buried utilities.

G. Ensure areas to be backfilled are free from debris, snow, ice, water, soft soils, organic materials, or frozen ground.

3.2 PREPARATION

A. Remove debris, snow, ice, water, soft soils, organic materials, or frozen ground from areas to be backfilled.

B. Scarify subgrade surface to a depth of 1 inch.

C. Compact subgrade to density requirements for subsequent backfill materials.

D. Cut out soft areas of subgrade not capable of compaction in place. Backfill with Type A2 fill and compact to density equal to or greater than requirements for subsequent fill material.

3.3 FILLING

A. Fill areas to grades and elevations shown on the Drawings.

B. Aggregate Type A1: Place and compact materials in equal continuous layers not exceeding 6 inches compacted depth.

C. Soil Type S1 and S2: Place and compact material in equal continuous layers not exceeding 6 inches compacted depth.

D. Employ a placement method that does not disturb or damage other work.

E. Maintain optimum moisture content of backfill materials to attain required compaction density.

F. Backfill around installations as follows:

1. Do not dump directly against installation.

2. Place layers simultaneously on both sides of installed work to equalize loading and minimize movement.

3. Where temporary unbalanced earth pressures are liable to develop on walls or other structures:

1. If approved by ENGINEER, erect bracing or shoring to counteract unbalance.

2. Place material by hand under, around, and over installations until 2 feet of cover is provided.

G. Slope grade away from building minimum 2 percent to match existing grade.

H. Make gradual grade changes. Blend slope into level areas.

I. Completely use suitable excavated soil (common fill Type S1) approved for backfilling before using imported common fill (common fill Type S2).

J. Do not use excavated material which is determined unsuitable by ENGINEER. Dispose of on the Site at a location determined by ENGINEER.

K. Do not operate heavy compaction equipment closer than 5 feet to foundations, underground utilities, or monitoring wells.

L. Remove sheeting and shoring required during excavation during backfilling operations. Do not remove bracing until backfilling has reached the respective level of such bracing. Pull sheeting in increments that will ensure compacted backfill is maintained at an appropriate elevation above toe of sheeting.

M. Decontaminate or dispose of sheeting and shoring used during the Works as directed by ENGINEER.

N. Do not backfill around or over cast-in-place concrete within 72 hours of concrete placing or until it has sufficient strength to withstand earth and compaction pressure, and obtain approval from ENGINEER to backfill.

O. Compact each layer to density specified in Article 3.4 before placing succeeding layers.

3.4 COMPACTION

A. Aggregate Type A1: Compact to 95 percent SMDD.

B. Soil Type S1: Compact to 95 percent SMDD.

C. Soil Type S2: Compact to 95 percent SMDD.

D. Apply uncontaminated water as necessary during compaction to obtain specified density. If material to be compacted is excessively moist, aerate with suitable equipment and methods until the moisture content is corrected. In areas not accessible to rolling equipment, compact material to specified density with mechanical tampers.

E. Do not direct jets of water at fill with such force that finer materials will be washed out.

F. Compaction Equipment: The type, size, and efficiency of compaction equipment shall be capable of achieving specified degree of compaction. When operating equipment adjacent to and immediately above structures, exercise care so as not to cause damage or displacement of the structure.

3.5 TOLERANCES

A. Top Surface of Backfilling: Plus or minus 1 inch from required elevations.

3.6 FIELD QUALITY CONTROL

A. Section 01400 - Quality Requirements: Requirements for field inspection and testing.

B. Testing by ENGINEER:

1. ENGINEER may select samples of uncompacted fill intended for the Works and samples of compacted fill in the Works.

2. ENGINEER will perform tests in the field and in the laboratory on samples of backfill and imported fill to determine if materials meet specification. Testing of imported fill will include analysis for the presence of contaminants, grain size analysis, moisture content determination, bulk wet density, maximum dry density, and hydraulic conductivity. Testing for backfill will include moisture content determination, maximum dry density, and bulk wet density. Copies of test reports will be supplied to CONTRACTOR on request.

3. Testing by ENGINEER will in no way relieve CONTRACTOR of his responsibility to test all material prior to notifying ENGINEER of materials' suitability for the work involved.

C. Methods of Testing by ENGINEER:

1. Maximum dry density and optimum moisture content will be determined in the laboratory in accordance with ASTM D698.

2. Moisture content in the laboratory will be determined in accordance with ASTM D2216.

3. Bulk wet density will be determined in the field in accordance with ASTM D2922.

4. Moisture content will be determined in the field in accordance with ASTM D3017.

5. Particle size analysis will be performed in accordance with ASTM D422 or ASTM C117 and ASTM C136, whichever is appropriate to material being tested.

6. Chemical characterization will be performed in the laboratory in accordance with the methods specified in Paragraph 2.4 E for Fill Type S2.

D. Frequency of Testing by ENGINEER:

1. At least 1 density test and 1 moisture content determination for each 10,000 cu yd placed will be made.

2. At least 1 particle size analysis will be made for each 10,000 cu yd of fill and for any change in materials being used in the backfill.

3. At least 1 sample for chemical characterization of fill will be obtained and analyzed for each 10,000 cu yd of Fill Type S2.

E. Failure to Meet Specified Requirements: If tests indicate that material specifications have not been achieved or cannot be obtained with equipment in use, procedure being followed, or material being incorporated, remove and replace work and modify operations so that the equipment, procedures, and materials will produce the required results. Additional testing required by ENGINEER will be to CONTRACTOR's account.

3.7 ADJUSTING

A. Section 01700 - Execution Requirements: Requirements for adjusting installed work.

B. Finish compacted surfaces to within 1 inch of grades shown on the Drawings but not uniformly high or low. Correct surface irregularities by loosening and adding or removing material until the surface is within specified grade.

C. Leave work areas in a properly graded condition sloped as required to permit proper drainage and free of depressions that will pond or collect water or debris that will restrict flow.

3.8 CLEANING

A. Section 01700 - Execution Requirements: Requirements for cleaning installed work.

B. Clean and reinstate work areas and areas affected by equipment outside areas specified to be excavated, to specified restoration condition.

C. Upon completion of backfilling, remove excess material and debris from work areas and travel routes.

3.9 PROTECTION OF FINISHED WORK

A. Section 01700 - Execution Requirements: Requirements for protecting installed work.

B. Reshape and recompact fills subjected to vehicular traffic.

PART 4 MEASUREMENT AND PAYMENT

4.1 GENERAL

A. Section 01200 - Price and Payment Procedures: Requirements for measurement and payment.

B. Payment Basis: No separate payment will be made. This section forms part of the lump sum price associated with the civil portion of the project.

END OF SECTION

SECTION 02317

EXCAVATION

PART 1 GENERAL

1.1 SECTION INCLUDES

A. Excavating for building foundations.

B. Excavating for manholes and well chambers.

1.2 DEFINITIONS

A. Excavation: Removal of materials of whatever nature encountered, whether wet, frozen, or otherwise, including dense tills, hardpan, frozen materials, cemented materials, concrete fragments, asphalt pavement, boulders or rock fragments, and weathered rock which can be removed by ripping or excavating with heavy-duty mechanical construction equipment without drilling and blasting.

B. Excavation Limits: Areal excavation limits shown on the Drawings to specified depth or as directed by ENGINEER and does not include areas shown as being on hold pending further sampling and analysis by ENGINEER.

C. Additional Excavation: Excavation beyond initial excavation limits either areally or in depth, as directed by ENGINEER following sampling and analysis and including trench excavations.

D. Rock: Material from solid masses of igneous, sedimentary, or metamorphic rock which, prior to its removal, was integral with its parent mass, and boulders or rock fragments having individual volume in excess of 1 cu yd.

1.3 PROGRESS SUBMITTALS

A. Section 01300 - Administrative Requirements: Requirements for progress submittals.

B. Provide to ENGINEER schedule of service disruptions to utilities no later than 3 weeks prior to proposed date of disruption. ENGINEER will review schedule with OWNER and respond within 1 week.

1.4 ENVIRONMENTAL REQUIREMENTS

A. Section 01500 - Temporary Facilities and Controls: Requirements for temporary controls.

B. Protect open excavations against damage due to surface runoff and runon. Take necessary precautions to prevent erosion of excavated or disturbed surfaces.

C. Suspend operations whenever climatic conditions, as determined by ENGINEER, may detrimentally affect the quality of excavated material and prevent their use as backfill.

D. After occurrence of heavy rains, do not operate equipment on approved excavations until the material has dried sufficiently to prevent occurrence of excessive rutting.

E. Where excavations have been softened or eroded, remove soft and yielding material or otherwise objectionable or damaged areas and replace with fill as specified by ENGINEER, at no additional cost to OWNER.

F. Decontaminate equipment involved in excavation activities which may have come in contact with potentially contaminated material before being removed from the Site or being relocated to clean areas of the Site.

G. Do not obstruct flow of surface drainage or natural watercourses.

1.5 SEQUENCING AND SCHEDULING

A. Section 01300 - Administrative Requirements: Requirements for coordination.

B. Sequence and schedule excavation activities with work of other Sections.

C. Coordinate interruptions of utility services to existing and adjacent buildings or facilities which become necessary either directly or indirectly due to work required under this Contract through ENGINEER.

D. Coordinate and sequence excavation operations to minimize the need for temporary stockpiling of excavated materials until required for backfilling. Make every effort to balance cut and fill operations and to ensure that excavated material designated for backfill is immediately placed as backfill in the Works. Keep the time during which excavations remain open to the practicable minimum.

E. Do not allow or cause any of work performed to be covered up or enclosed prior to required inspections, tests, or approvals.

F. Unless otherwise specified, advise ENGINEER a minimum of 48 hours in advance of excavation operations to enable ENGINEER to complete pre-excavation surveying.

PART 2 PRODUCTS (NOT USED)

PART 3 EXECUTION

3.1 EXAMINATION

A. Section 01700 - Execution Requirements: Requirements for examination.

B. Verify that survey bench marks and existing and intended elevations for the Works are as shown on the Drawings.

C. Monitoring Wells Requiring Protection: ENGINEER and CONTRACTOR will locate and mark locations prior to commencement of excavation.

3.2 PREPARATION

A. Identify required lines, levels, contours, and datum locations.

B. Locate, identify, and protect utilities from damage.

C. Arrange for utility company to identify utilities.

D. Protect plant life, lawns, and other features remaining as a portion of final landscaping.

E. Maintain and protect from damage bench marks and survey control points, wells, utilities, buildings, building foundations, surface features, and structures encountered, and not designated for demolition or removal. In the event of disturbance of or damage to any such well, utility, buildings, building foundations, surface features, or structures, immediately notify ENGINEER. Repair or replace, as directed by ENGINEER, any well, utility, building, building foundation, surface feature, or structure damaged by CONTRACTOR operations unless specified for demolition or removal.

F. Protect existing buildings, wells, facilities, surface features, and structures where temporary unbalanced earth pressures or uplift are liable to develop utilizing bracing, shoring, or other approved methods to counteract unbalance.

G. Employ procedures for excavation such that disturbance of wells, utilities, buildings, building foundations, surface features, and structures is avoided.

H. Protect excavations from contamination.

I. Obtain direction from ENGINEER before moving or otherwise disturbing wells, utilities, building, building foundations, surface features, and structures.

J. Remove surface features or obstructions including, but not necessarily limited to, trees, shrubs, bush, and other vegetation from surfaces to be excavated, within the limits shown on the Drawings or as required to construct the finished work. Dispose of such obstructions to an on-Site spoil area as directed by ENGINEER.

K. The contractor shall provide photo and video documentation of existing structures including roads, existing structures and landscaping within the work areas at pre-construction and post construction. No intrusive work shall commence prior to completion of pre-construction photo documentation activities.

3.3 EXCAVATING

A. Underpin or shore adjacent structures that may be damaged by excavating work.

B. Excavate soil to accommodate building foundations, and the Site structures, and construction operations.

C. Hand trim load-bearing surfaces for foundations. Excavate disturbed load-bearing soil in direct contact with foundations to expose soil of original bearing capacity.

D. Slope banks with machine to angle of repose or shallower, as required by Laws and Regulations, until shored.

E. Do not interfere with bearing splay of foundations which extends down at 30 degrees from horizontal starting at a point 2 feet horizontally from edge of footing.

F. Grade top perimeter of excavation to prevent surface water from draining into excavation.

G. Remove debris and other obstructions encountered.

H. Remove lumped soil, boulders, and rock up to 1 cu yd measured by volume.

I. Notify ENGINEER of unexpected subsurface conditions and discontinue affected work in area until notified to resume work.

J. Hand trim, make firm, and remove loose material and debris from excavations. Where natural or fill material at bottom of excavation, except excavation for foundations, is disturbed, compact disturbed soil to density at least equal to undisturbed soil or to the density specified for the succeeding layer of backfill, whichever is greater, or remove disturbed soil and refill the space as directed by ENGINEER.

K. Do not disturb soil within the branch spread of trees or shrubs that are to remain. If excavating through roots, excavate by hand and cut roots with sharp axe or saw. Seal cuts with approved tree wound dressing.

L. Open excavations shall be CONTRACTOR's sole responsibility.

M. Stockpile excavated material in area designated on the Site in accordance with Article 3.7.

3.4 DISPOSAL OF UNSUITABLE OR EXCESS EXCAVATED MATERIAL

A. Unsuitable Excavated Materials: Soil containing rocks larger than 6 inches measured through any axis, roots, organic matter, frozen material, snow, ice, very soft clays, fine uniform sands, soils which are not compactable to the specified density.

B. Dispose of excavated material determined by ENGINEER as unsuitable for backfill or excess excavated material, in a designated on-Site spoil area as directed by ENGINEER.

3.5 OVER-EXCAVATING

A. Notify ENGINEER when soil at the bottom of the excavation appears unsuitable and proceed as directed by ENGINEER. Where, in ENGINEER's opinion, the undisturbed condition of the soils is inadequate for the support of installations, over-excavate to adequate supporting soils as directed by ENGINEER and refill the excavated space with approved material to the proper elevation in accordance with the procedure specified for backfill. Where so directed by ENGINEER and except as otherwise specified, the excavation and removal of inadequate material as specified, supply and installation of such material in excess of quantities shown on the

Drawings will be paid for under the appropriate item of the **Schedule of Additional Unit Prices**. Use such over-excavated material in the Works or stockpile on the Site as approved by ENGINEER.

B. Backfill in accordance with Sections 02316, 02318, and 02632 as appropriate.

C. Should unauthorized excavation be carried below the lines and grades shown on the Drawings and in excess of specified limits and tolerance because of CONTRACTOR's operations including errors, methods of construction, or to suit his convenience, correct unauthorized excavation as follows:

1. Fill under structures including, but not necessarily limited to foundations, with concrete. Confirm by means of review of borehole logs, subsurface testing, or other method approved by ENGINEER that bearing capacity at lower elevation is adequate.

2. Fill under unauthorized over-excavation areas by extending the indicated bottom elevation of the base of the material specified to be placed to the unauthorized excavation bottom without altering the required top elevation and compact in accordance with Section 02316, 02318, and 02632 as appropriate unless otherwise directed by ENGINEER.

3. For locations where foundation bases are over-excavated, review borehole logs to confirm that soil at lower elevation is of acceptable bearing capacity, regardless of what over-excavated area is backfilled with.

D. Additional excavation to remove weakened or disturbed soil or any additional activity caused by CONTRACTOR's error, unsuitable construction methods or procedures, or to suit CONTRACTOR's convenience and subsequent additional backfill and compaction to correct deficiencies shall be at no additional cost to OWNER.

E. The excavation for the building was designed based on the evaluation geotechnical boring logs.

3.6 PROTECTING CLEAN SOIL FROM CONTAMINATION

A. Notify ENGINEER when soil at the bottom of the excavation appears contaminated and proceed as directed by ENGINEER.

3.7 TEMPORARY STOCKPILING

A. Obtain ENGINEER's approval for locations of temporary stockpiles. Obtain ENGINEER's approval prior to placing material in such stockpiles.

B. Construct stockpile sites so that they are well drained, free of foreign materials, and of adequate bearing capacity to support the weight of materials to be placed thereon.

C. Provide and maintain access to stockpiles.

D. Separate differing materials with substantial dividers or stockpile apart to prevent mixing.

E. Prevent contamination or segregation of soil types.

F. Direct surface water away from stockpile sites to prevent erosion or deterioration of materials.

G. Maintain temporary stockpile slopes not steeper than 2 horizontal to 1 vertical. In no instance shall stockpiles be greater than 15 feet in height above original surrounding grade. Place hay bales or other soil erosion and sediment control fencing at the base of and around each temporary stockpile to contain soil that may be washed off the stockpile.

H. Maintain area surrounding stockpiles in neat and tidy condition.

I. Cover stockpiled material with robust tarpaulin to withstand adverse weather, wind, and other detrimental forces. Provide total protection of stockpiled material from rain and other adverse weather effects.

3.8 TOLERANCES

A. Within 2 inches greater or less than specified depth but not uniformly greater or less.

3.9 FIELD QUALITY CONTROL

A. Section 01400 - Quality Requirements: Requirements for field inspection.

B. ENGINEER will provide for visual inspection of bearing surfaces of foundations.

3.10 CLEANING

A. Section 01700 - Execution Requirements: Requirements for cleaning installed work.

B. Clean and reinstate work areas and areas affected by equipment outside areas specified to be excavated, to specified restoration condition.

3.11 PROTECTION OF FINISHED WORK

A. Section 01700 - Execution Requirements: Requirements for protecting installed work.

B. Protect bottom of excavations and soil adjacent to and beneath foundation from freezing and disturbance.

PART 4 MEASUREMENT AND PAYMENT

4.1 GENERAL

A. Section 01200 - Price and Payment Procedures: Requirements for measurement and payment.

B. Payment Basis: No separate payment will be made. This section forms part of the lump sum price associated with the civil portion of the project.

END OF SECTION

SECTION 02318

TRENCHING

PART 1 GENERAL

1.1 SECTION INCLUDES

A. Excavating trenches for forcemains and discharge lines from building to well chambers and manholes.

B. Compacted fill from top of bedding to subgrade elevations.

C. Backfilling and compaction.

1.2 REFERENCES

A. Section 01400 - Quality Requirements: Requirements for references.

B. American Society for Testing and Materials (ASTM):

1. D422 - Standard Test Method for Particle-Size Analysis of Soils.

2. D698 - Test Method for Laboratory Compaction Characteristics of Soil Using Standard Effort (12,400 ft-lbf/ft^3 (600 kN-m/m^3)).

3. D2216 - Standard Test Method for Laboratory Determination of Water (Moisture) Content of Soil and Rock.

4. D2922 - Standard Test Methods for Density of Soil and Soil-Aggregate in Place by Nuclear Methods (Shallow Depth).

5. D2487 - Standard Classification of Soils for Engineering Purposes (Unified Soil Classification System).

6. D3017 - Standard Test Method for Water Content of Soil and Rock in Place by Nuclear Methods (Shallow Depth).

C. United States Environmental Protection Agency (USEPA): SW-846 - Test Methods for Evaluating Solid Wastes, Physical/Chemical Methods, Third Edition and Promulgated Updates I-III, November 1986.

1.3 DEFINITIONS

A. SMDD: Standard Maximum Dry Density and in the context of this Contract means the maximum dry unit weight determined in accordance with ASTM D698.

B. 'State Standard' in this Section shall mean State of New Jersey Department of Transportation Standard Specifications for Road and Bridge Construction.

1.4 QUALITY ASSURANCE

A. Perform work of this Section in accordance with State Standards.

1.5 ENVIRONMENTAL REQUIREMENTS

A. Section 01500 - Temporary Facilities and Controls: Requirements for temporary controls.

B. Protect open excavations against damage due to surface runoff and runon. Take necessary precautions to prevent erosion of excavated or disturbed surfaces.

C. Suspend operations whenever climatic conditions, as determined by ENGINEER, are unsatisfactory for placing fill to the requirements of this Section.

D. After occurrence of heavy rains, do not operate equipment on approved excavations until the material has dried sufficiently to prevent occurrence of excessive rutting.

E. Where excavations have been softened or eroded, remove soft and yielding material or otherwise objectionable or damaged areas and replace with fill as specified by ENGINEER.

F. Decontaminate equipment involved in excavation activities which may have come in contact with potentially contaminated material before being removed from the Site or being relocated to clean areas of the Site.

1.6 SEQUENCING AND SCHEDULING

A. Section 01300 - Administrative Requirements: Requirements for coordination.

B. Sequence and schedule excavation activities with work of other Sections.

C. Do not commence excavation operations until the Site-specific Health and Safety Plan has been reviewed by ENGINEER and implemented and decontamination facilities and stockpiling facilities are constructed and operational.

D. Coordinate interruptions of utility services to existing and adjacent buildings or facilities which become necessary either directly or indirectly due to work required under this Contract through ENGINEER. Down time for service disruptions may be limited as to duration and time (weekend, nights, or holidays). Perform work during the period designated.

E. Coordinate and sequence excavation operations to minimize the need for temporary stockpiling of excavated materials until required for backfilling. Make every effort to ensure that excavated material designated for backfill is immediately placed as backfill in the Works. Keep the time during which excavations remain open to the practicable minimum.

F. Do not allow or cause any of the work performed or installed to be covered up or enclosed prior to required inspections, tests, or approvals.

G. Unless otherwise specified, advise ENGINEER a minimum of 48 hours in advance of excavation operations to enable ENGINEER to take pre-excavation cross-sections.

PART 2 PRODUCTS

2.1 MATERIALS

A. Common Fill Type S1 and S2: Section 02316.

PART 3 EXECUTION

3.1 EXAMINATION

A. Section 01700 - Execution Requirements: Requirements for examination.

B. Verify that survey bench marks and intended elevations for the Works are as shown on the Drawings.

C. Verify structural ability of unsupported walls to support imposed loads by the fill.

D. Do not allow or cause any of the work performed or installed to be covered up or enclosed by work of this Section prior to required inspections, measurements, tests, or approvals.

E. Obtain approval from ENGINEER for completed excavations and previously placed material prior to placement of successive lifts.

F. Obtain approval from ENGINEER prior to placing fill against structures or around exposed buried utilities.

G. Do not proceed with backfilling operations within a specific excavation area until the excavation area is approved as complete by ENGINEER. Do not cause excavations to be backfilled until ENGINEER has approved excavation as complete and completed field measurements for payment purposes, and sampling and testing for analytical purposes.

H. Ensure areas to be backfilled are free from debris snow, ice, water, or frozen ground.

I. Extraction Wells: ENGINEER and CONTRACTOR will locate and mark the location of extraction wells prior to commencement of excavation.

3.2 PREPARATION

A. Identify required lines, levels, contours, and datum locations.

B. Locate, identify, and protect utilities that remain from damage.

C. Protect plant life, lawns, and other features remaining as a portion of final landscaping.

D. Protect bench marks, survey control points, existing structures, fences, sidewalks, paving, and curbs from excavating equipment and vehicular traffic.

E. Maintain and protect above and below grade utilities which are to remain.

F. Maintain and protect from damage wells, utilities, and structures encountered, and not designated for demolition or removal including buildings and building foundations. In the event of disturbance of or damage to any utility or structure, immediately notify ENGINEER. Repair or replace any well, utility, or structure damaged by CONTRACTOR operations unless specified for demolition or removal.

G. Protect existing buildings and surface features which may be affected while work is in progress.

H. Protect existing buildings and structures where temporary unbalanced earth pressures are liable to develop on walls or other structures utilizing bracing, shoring, or other approved methods to counteract unbalance.

I. Protect monitoring wells, extraction wells, and other structures and pipelines from uplift and displacement or disturbance during excavation operations.

J. Employ procedures for trenching such that disturbance of wells, utilities, structures, and their foundations is avoided.

K. Protect trenches from contamination and surface water runoff.

L. Obtain direction from ENGINEER before moving or otherwise disturbing utilities or structures.

M. Provide photo and video documentation of existing structures including roads, landscaping, and other structures within the work areas at pre-construction and post construction. No intrusive work shall commence prior to completion of pre-construction photo activities.

3.3 TRENCHING

A. Excavate soil required for connection of forcemains to treatment building and for treated water discharge piping.

B. Cut trenches sufficiently wide to enable installation and allow inspection. Remove water or materials that interfere with the Works.

C. Do not interfere with bearing splay of foundations which extends down at 45 degrees from horizontal starting at a point 2 feet horizontally from edge of footing.

D. The banks of trenches at bottom, within limits of pipe bedding and pipe cover, shall be as nearly vertical as practicable.

E. In no case during performance of the Works shall trenching advance more than 200 feet ahead of active installation. Do not leave trenches open more than 40 feet at end of day's operation.

F. Accurately excavate and grade the bottom of trenches to provide uniform bearing and support for each section of pipe on full thickness of approved bedding material at every point along its entire length.

G. Remove lumped soil, boulders, and rock up to 1 cu yd, measured by volume.

H. Hand trim, make firm, and remove loose material and debris from trenches. Where natural or fill material at bottom of excavation is disturbed, compact disturbed soil to density at least equal to undisturbed soil or to the density specified for the succeeding layer of backfill, whichever is greater, or remove disturbed soil and refill the space as directed by ENGINEER.

I. Do not disturb soil within the branch spread of trees or shrubs that are to remain. If excavating through roots, excavate by hand and cut roots with sharp axe or saw. Seal cuts with approved tree wound dressing.

J. Open trenches shall be CONTRACTOR's sole responsibility.

K. Dispose of excavated material not approved by ENGINEER for use as fill in the Works including boulders, debris, brush, roots, or other perishable matter, in a designated on-Site spoil area as directed by ENGINEER.

L. Fence any excavation left open overnight.

3.4 OVER-EXCAVATING

A. Notify ENGINEER when soil at bottom of the excavation appears unsuitable and proceed as directed by ENGINEER. Where, in ENGINEER's opinion, the undisturbed condition of the soils is inadequate for the support of installations, over-excavate to adequate supporting soils as directed by ENGINEER and refill the excavated space with approved material to the proper elevation in accordance with procedure specified for backfill. Where so directed by ENGINEER and except as otherwise specified, the excavation and removal of inadequate material as specified, supply and installation of such material in excess of quantities shown on Drawings will be paid for under the appropriate item of the **Schedule of Additional Unit Prices**. Use such over-excavated material in the Works or stockpile on the Site as approved by ENGINEER.

B. Should unauthorized excavation be carried below the lines and grades shown on the Drawings and in excess of the specified depth and tolerance because of CONTRACTOR's operations including errors, methods of construction, or to suit his convenience, correct unauthorized excavation as follows:

1. Fill under structures including, but not necessarily limited to foundations, with concrete. Confirm by means of review of borehole logs, subsurface testing, or other method approved by ENGINEER that bearing capacity at lower elevation is adequate.

2. Fill under unauthorized over-excavation areas by extending the indicated bottom elevation of the base of material specified to be placed to the unauthorized excavation bottom without altering the required top elevation, and compact unless otherwise directed by ENGINEER.

C. Additional excavation to remove weakened or disturbed soil caused by unsuitable construction methods or procedures or to suit CONTRACTOR's convenience and subsequent additional backfill and compaction to correct deficiencies shall be at no additional cost to OWNER.

3.5 PROTECTING CLEAN SOIL FROM CONTAMINATION

A. Notify ENGINEER when soil at the bottom of the excavation appears contaminated and proceed as directed by ENGINEER.

3.6 BACKFILLING

A. Backfill trenches to contours and elevations with unfrozen fill materials.

B. Do not backfill over porous, wet, frozen, or spongy subgrade surfaces.

C. Common Fill Type S1 and S2: Place and compact material in equal continuous layers as per the drawings.

D. Employ a placement method that does not disturb or damage forcemains or utilities in trench.

E. Maintain moisture content of fill materials to attain required compaction density.

F. Completely use Common Fill Type S1 approved for backfilling prior to using imported Fill Type S2.

G. Remove surplus fill materials from the Site.

H. Leave fill material stockpile areas completely free of excess fill materials.

I. Backfill material shall be stockpiled at sufficient distance from the sides of trenches to prevent overloading trench walls. Stability of trench excavations shall be the responsibility of the contractor.

3.7 COMPACTION

A. Common Soil Fill Type S1: Compact to 95 percent SMDD.

B. Common Soil Fill Type S2: Compact to 95 percent SMDD.

C. Apply uncontaminated water as necessary during compaction to obtain the specified density. If the material to be compacted is excessively moist, aerate with suitable equipment and methods until the moisture content is corrected. In areas not accessible to rolling equipment, compact material to specified density with mechanical tampers approved by ENGINEER.

D. When granular material is wetted by sprinkling, after being spread on material in place, sprinkling shall be done by method approved by ENGINEER. Do not direct jets of water at fill with such force that finer materials will be washed out.

E. Compaction Equipment: The type, size, and efficiency of compaction equipment shall be capable of achieving specified degree of compaction without damaging utilities. When operating equipment adjacent to and immediately above structures, exercise care so as not to cause damage or displacement of the structure.

3.8 TEMPORARY STOCKPILING

A. Obtain ENGINEER's approval for locations of temporary stockpiles. Obtain ENGINEER's approval prior to placing material in such stockpiles.

B. Stockpile materials on the Site at locations approved by ENGINEER.

C. Construct stockpile sites so that they are level, well drained, free of foreign materials, and of adequate bearing capacity to support the weight of materials to be placed thereon.

D. Provide and maintain access to stockpiles.

E. Separate differing materials with substantial dividers or stockpile apart to prevent mixing.

F. Prevent intermixing of soil types or contamination or segregation.

G. Direct surface water away from stockpile sites to prevent erosion or deterioration of materials.

H. Maintain temporary stockpile slopes not steeper than 2 horizontal to 1 vertical. In no instance shall stockpiles be greater than 15 feet in height above original surrounding grade. Place hay bales or other soil erosion and sediment control fencing at the base of and around each temporary stockpile to contain soil that may be washed off the stockpile.

I. Maintain area surrounding stockpiles in neat and tidy condition.

J. Cover stockpiled material with approved reinforced polyethylene sheeting of minimum 6-mil thickness to withstand adverse weather, wind, and other detrimental forces. Provide total protection of stockpiled material from rain and other adverse weather effects.

3.9 TOLERANCES

A. Trench Depth: Plus or minus 1 inch.

B. Trench Width: Plus or minus 1 foot from required width.

C. Top Surface of General Backfilling: Plus or minus 1 inch from required elevations.

3.10 FIELD QUALITY CONTROL

A. Section 01400 - Quality Requirements: Field inspection and testing.

B. Testing by ENGINEER:

1. ENGINEER may select samples of uncompacted fill intended for the Works and samples of compacted fill in the Works.

2. ENGINEER will perform tests in the field and in the laboratory on samples of backfill and imported fill to determine if materials meet specification at frequency and methods specified in Article 3.10. Copies of test reports will be supplied to CONTRACTOR on request.

3. Testing by ENGINEER will in no way relieve CONTRACTOR of his responsibility to test all material prior to notifying ENGINEER of materials' suitability for the work involved.

C. Methods of Testing by ENGINEER:

1. Maximum dry density will be determined in the laboratory in accordance with ASTM D698.

2. Moisture content in laboratory will be determined in accordance with ASTM D2216.

3. Bulk wet density will be determined in the field in accordance with ASTM D2922.

4. Moisture content will be determined in the field in accordance with ASTM D3017.

D. Frequency of Testing by ENGINEER:

1. At least 1 density test and 1 moisture content determination for each 100 linear feet of trench per lift.

E. Failure to Meet Specified Requirements: If tests indicate that material specifications have not been achieved or cannot be obtained with equipment in use, procedure being followed, or material being incorporated, remove and replace work and modify operations so that the equipment, procedures, and materials will produce the required results. Additional testing required by ENGINEER will be at no additional cost to OWNER.

F. Proofroll compacted fill surfaces under paving.

3.11 PROTECTION OF FINISHED WORK

A. Section 01700 - Execution Requirements: Requirements for protecting installed work.

B. Reshape and recompact fills subjected to vehicular traffic during construction.

PART 4 MEASUREMENT AND PAYMENT

4.1 GENERAL

A. Section 01200 - Price and Payment Procedures: Requirements for measurement and payment.

B. Payment Basis: No separate payment will be made. This section forms part of the lump sum price associated with the civil portion of the project.

END OF SECTION

SECTION 2540

SEDIMENTATION AND EROSION CONTROL

PART 1: GENERAL

1.01 WORK INCLUDED

CONTRACTOR shall furnish all labor, materials, equipment and incidentals necessary to perform all installation, maintenance, removal and area cleanup related to sedimentation control work as shown on the Drawings and as specified herein. The work shall include, but not necessarily be limited to; installation of temporary access ways and staging areas, silt fences, stone filter berms, sediment removal and disposal, device maintenance, removal of temporary devices, temporary mulching, excelsior matting installation and final cleanup.

1.02 RELATED WORK

1. Dewatering is included in Section 2020

2. Trenching, Backfilling and Compacting is included in Section 2210

1.03 SUBMITTALS

Within 10 days after award of Contract, the CONTRACTOR shall submit to the ENGINEER for approval, in accordance with Section 1300, technical product literature for all commercial products to be used for sedimentation and erosion control.

1.04 QUALITY ASSURANCE

The CONTRACTOR shall be responsible for the timely installation and maintenance of all sedimentation control devices necessary to prevent the movement of sediment from the construction site to off site areas or into the stream system via surface runoff or underground drainage systems. Measures in addition to those shown on the Drawings necessary to prevent the movement of sediment off site shall be installed, maintained, removed, and cleaned up at the expense of the CONTRACTOR. No additional charges to the OWNER will be considered.

Sedimentation and erosion control measures shall conform to the requirements outlined in the New Jersey Standards for Soil Erosion and Sediment Control, latest edition.

PART 2: PRODUCTS

2.01 MATERIALS

Crushed stone for sediment filtration devices shall be 2 inches in diameter. Stone for riprap shall conform to New Jersey Soil Conservation Committee Standards. The median size

of the riprap by weight shall be as shown on the Drawings.

Silt Fence

1. Steel posts shall be a minimum of 5 feet in length, 2-1/2-inch by 2-1/2-inch by 1/4-inch angle post with self-fastening tabs and a 5-inch by 4-inch (nominal) steel anchor plate at bottom.

2. Welded wire fabric shall be 4-inch by 4-inch mesh of 12 gauge by 12 gauge steel wire.

3. Silt fence fabric shall be a woven, polypropylene, ultraviolet resistant material such as Mirafi 100X as manufactured by Mirafi, Inc., Charlotte, NC or equal.

4. Tie wires for securing silt fence fabric to wire mesh shall be light gauge metal clips (hog rings), or 1/32-inch diameter soft aluminum wire.

5. Prefabricated commercial silt fence may be substituted for built-in-field fence. Pre-fabricated silt fence shall be "Envirofence" as manufactured by Mirafi Inc., Charlotte, NC or equal.

Straw mulch shall be utilized on all newly graded areas to protect areas against washouts and erosion. Straw mulch shall be comprised of threshed straw of oats, wheat, barley, or rye that is free from noxious weeds, mold or other objectionable material. The straw mulch shall contain at least 50 percent by weight of material to be 10 inches or longer. Straw shall be in an air-dry condition and suitable for placement with blower equipment.

Latex acrylic copolymer, such as Soil Sealant with coalescing agent as manufactured by Soil Stabilization Co., Merced, CA or approved equivalent shall be used as straw mulch tackifier.

An asphalt tackifier shall only be used when temperatures are too low to allow the use of a latex acrylic copolymer and only with prior written approval from the ENGINEER.

Excelsior matting blanket shall be installed in all seeded drainage swales and ditches as shown on the Drawings or as directed by the ENGINEER. Excelsior matting shall be AMXCO Curlex Blanket as manufactured by American Excelsior Company, Arlington, TX or equal.

PART 3: EXECUTION

3.01 INSTALLATION

Silt Fence Installation

1. Silt fences shall be positioned as indicated on the Drawings and as necessary to prevent off site movement of sediment produced by construction activities as directed by the ENGINEER.

2. Dig trench approximately 6-in wide and 6-in deep along proposed fence lines.

3. Drive metal-stakes, 8 feet on center (maximum) at back edge of trenches. Stakes shall be driven 2 feet (minimum) into ground.

4. Hang 4 by 4 woven wire mesh on posts, setting bottom of wire in bottom of trench. Secure wire to posts with self-fastening tabs.

5. Hang silt fence fabric on wire carrying to bottom of trench with about 6-in of fabric laid across bottom of trench. Stretch fabric fairly taut along fence length and secure with tie wires 12-in O.C. both ways.

6. Backfill trench with excavated material and tamp.

7. Install pre-fabricated silt fence according to manufacturer's instructions.

Stone Filter Berm Installation

1. Place berm stone at pump discharge underlain with filter fabric.

3.02 MAINTENANCE AND INSPECTIONS

Inspections

1. CONTRACTOR shall make a visual inspection of all sedimentation control devices once per week and promptly after every rainstorm. If such inspection reveals that additional measures are needed to prevent movement of sediment to offsite areas or into the vent trench, CONTRACTOR shall promptly install additional devices as needed. Sediment controls in need of maintenance shall be repaired promptly.

Device Maintenance

1. Silt Fences

   a. Remove accumulated sediment once it builds up to one-half of the height of the fabric.

   b. Replace damaged fabric, or patch with a 2-foot minimum overlap. Overlaps may only be made at fence posts.

   c. Make other repairs as necessary to ensure that the fence is filtering all runoff directed to the fence.

2. Stone Filter Berm

   a. Muck out trapped silt from dewatering operations when it has built up to within 6 inches of the top of the berm.

b. Replace crushed stone filter when saturated with silt.

3. Add crushed stone to access ways and staging area as necessary to maintain a firm surface free of ruts and mudholes.

3.03 TEMPORARY MULCHING

CONTRACTOR shall apply temporary mulch to areas where rough grading has been completed but final grading is not anticipated to begin within 30 days of the completion of rough grading. Straw mulch shall be applied at rate of 70 to 90 lbs/1000 ft^2 and tackified with latex acrylic copolymer at a rate of 1 gal/1000 ft^2 diluted in a ratio of 30 parts water to 1 part latex acrylic copolymer mix.

3.04 EXCELSIOR MATTING

Excelsior matting blankets shall be installed in all seeded drainage swales and ditches as shown on the Drawings and as directed by the ENGINEER in accordance with manufacturer's instructions. The area to be covered shall be properly prepared, fertilized and seeded with permanent vegetation before the blanket is applied. When the blanket is unrolled, the netting shall be on top and the fibers in contact with the soil over the entire area. The blankets shall be applied in the direction of water flow, and stapled. Blankets shall be placed a minimum of three rows (of 4-ft) wide (total approx. 12-ft width) within the drainage swale/ditch and stapled together in accordance with manufacturer's instructions. Side overlaps shall be 4-in minimum. The staples shall be made of wire, .091-in in diameter or greater, "U" shaped with legs 10-in in length and a 1-1/2-in crown. The staples shall be driven vertically into the ground, spaced approximately two linear feet apart, on each side, and one row in the center alternately spaced between each side. Upper and lower ends of the matting shall be buried to a depth of 4-in in a trench. Erosion stops shall be created every 25 feet by making a fold in the fabric and carrying the fold into a silt trench across the full width of the blanket. The bottom of the fold shall be 4-in below the ground surface. Staple on both sides of fold. Where the matting must be cut or more than one roll length is required in the swale, turn down upper end of downstream roll into a slit trench to a depth of 4-in. Overlap lower end of upstream roll 4-in past edge of downstream roll and staple.

To ensure full contact with soil surface, roll matting with a roller weighing 100 pounds per foot of width perpendicular to flow direction after seeding, placing matting and stapling. Thoroughly inspect channel after completion. Correct any areas where matting does not present a smooth surface in full contact with the soil below.

3.05 DISPOSAL OF DRAINAGE

The CONTRACTOR shall take sufficient precautions during construction to minimize the run-off of polluting substances such as silt, clay, fuels, oils, bitumens and calcium chloride into the supplies and surface waters of the State. Special precautions shall be taken in the use of construction equipment to prevent operations which promote erosion.

Disposal of drainage shall be in an area approved by the ENGINEER. The CONTRACTOR shall prevent the flow or seepage of drainage back into the drainage area. Drainage shall not be disposed of until silt and other sedimentary materials have been removed. Particular care shall be taken to prevent the discharge of unsuitable drainage to a water supply or surface water body.

As a minimum, the following shall apply:

1. Staked bales of hay or approved silt fencing shall be provided at points where drainage from the work site leaves the site to reduce the sediment content of the water. Sufficient bales of hay shall be provided such that all flow will filter through the hay. Other methods which reduce the sediment content to an equal or greater degree may be used as approved by the ENGINEER.

2. Drainage leaving the site shall flow to watercourses in such a manner to prevent erosion.

3.06 REMOVAL AND FINAL CLEANUP

Once the site has been fully stabilized against erosion, remove sediment control devices and all accumulated silt. Dispose of silt and waste materials in proper manner. Regrade all areas disturbed during this process and stabilize against erosion with surfacing materials as indicated on the Drawings.

END OF SECTION

SECTION 02721

AGGREGATE BASE COURSE

PART 1 GENERAL

1.1 SECTION INCLUDES

A. Aggregate base course for road restoration.

1.2 REFERENCES

A. Section 01400 - Quality Requirements: Requirements for references.

B. American Society for Testing and Materials (ASTM):

1. C117 - Standard Test Method for Materials Finer than 75-μm (No. 200) Sieve in Mineral Aggregates by Washing.

2. C136 - Standard Test Method for Sieve Analysis of Fine and Coarse Aggregates.

3. D698 - Standard Test Method for Laboratory Compaction Characteristics of Soil Using Standard Effort (12,400 ft-lbf/ft^3 (600 kN-m/m^3)).

4. D2922 - Standard Test Methods for Density of Soil and Soil-Aggregate in Place by Nuclear Methods (Shallow Depth).

5. D3017 - Standard Test Method for Water Content of Soil and Rock in Place by Nuclear Methods (Shallow Depth).

C. State of New Jersey Department of Transportation Standard Specifications for Road and Bridge Construction.

D. United States Environmental Protection Agency (USEPA): SW-846 - Test Methods for Evaluating Solid Wastes, Physical/Chemical Methods, Third Edition and Promulgated Updates I-III, November 1986.

1.3 DEFINITIONS

A. SMDD: Standard Maximum Dry Density and in the context of this Contract means the maximum dry unit weight determined in accordance with ASTM D698.

B. 'State Standard' in this Section shall mean State of New Jersey Department of Transportation Standard Specification for Road and Bridge Construction.

1.4 PROGRESS SUBMITTALS

A. Section 01300 - Administrative Requirements: Requirements for progress submittals.

B. Materials Sources: Submit name of proposed imported soil materials sources at least 14 days prior to commencing transport of materials to the Site.

C. Geotechnical and Chemical Data: At least 7 days prior to commencing transport of materials to the Site, submit data for source testing as specified in Article 2.3 for each type of aggregate materials.

D. Independent Geotechnical and Analytical Testing Firm: At least 14 days prior to commencing transport of aggregate materials to the Site, submit the name and qualifications of the independent testing firm proposed by CONTRACTOR to provide testing services for work of this Section.

E. Suppliers' Certificates: Submit certificates indicating that each type of aggregate material meets or exceeds specified requirements.

F. Weigh Tickets: Submit weigh tickets generated at CONTRACTOR's weigh scale of aggregate delivered to the Site the previous day.

G. Weigh Scale Calibration: Submit no later than 7 days prior to transporting materials to the Site a calibration chart, completed within the previous 6 months, for weigh scale. Weigh scale shall be calibrated by State of New Jersey Standards.

1.5 QUALITY ASSURANCE

A. Perform work of this Section in accordance with State Standards.

1.6 QUALIFICATIONS

A. Section 01800 – Facility Operation: Requirements for qualifications.

B. Independent Geotechnical Testing Firm: Company specializing in performing the work of this Section and complying with ASTM D3740.

C. Independent Laboratory: Company specializing in performing the work of this Section and complying with ASTM E548.

1.7 DELIVERY, STORAGE, AND HANDLING

A. Section 01600 - Product Requirements: Requirements for transporting, handling, storing, and protecting products.

B. Deliver, handle, and transport fill materials at all times in a manner and with equipment that will prevent intermixing of aggregate types, segregation, or contamination.

C. Minimize stockpiling requirements. Transport material from source directly to final position where possible.

D. Stockpile fill materials on the Site in locations approved by ENGINEER.

PART 2 PRODUCTS

2.1 GENERAL

A. Imported from an approved source and composed of clean, graded, hard, durable, uncoated particles obtained from deposits of gravel or sand, talus rock, quarried rock, or other suitable granular materials.

B. Free of unsuitable materials including:

1. Frozen material or material containing snow or ice.

2. Trees, stumps, branches, or other wood or lumber.

3. Wire, steel, cast iron, cans, drums, or other foreign material.

4. Materials containing hazardous or toxic constituents at hazardous or toxic concentrations.

2.2 COARSE AGGREGATE

A. Type A2: State Standard Dense Graded Aggregate Gradation Size Number 57..

2.3 SOURCE QUALITY CONTROL

A. Section 01400 - Quality Requirements: Requirements for source testing and analysis of aggregate material.

B. Testing and Analysis of Coarse Aggregate Type A2:

1. Maximum Dry Density, ASTM D698: 1 sample per 2,000 cu yd, or portion thereof, material required.

2. Grain Size, ASTM C117 and C136: 1 sample per 2,000 cu yd, or portion thereof, material required.

C. If tests indicate materials do not meet specified requirements, change material or material source and retest.

D. Provide materials of each type from the same source throughout the Works.

E. In the event of changes to approved sources of materials during performance of the Works, immediately advise ENGINEER of revised locations and obtain approval of such locations and materials prior to use in the Works.

PART 3 EXECUTION

3.1 EXAMINATION

A. Section 01700 – Execution Requirements: Requirements for examination.

B. Verify substrate has been inspected, gradients and elevations are correct, and is dry.

3.2 PREPARATION

A. Correct irregularities in substrate gradient and elevation by scarifying, reshaping, and recompacting.

B. Do not place fill on soft, muddy, or frozen surfaces.

3.3 AGGREGATE PLACEMENT

A. Place fill Type A2 in maximum 6-inch layers and compact to 95 percent SMDD.

B. Level and contour surfaces to elevations and gradients shown on the Drawings.

C. Add water to assist compaction. If excess water is apparent, remove aggregate and aerate to reduce moisture content.

D. Use mechanical tamping equipment in areas inaccessible to compaction equipment.

3.4 TOLERANCES

A. Flatness: Maximum variation of 1/4 inch measured with 10-foot straight edge.

B. Scheduled Compacted Thickness: Within 1/4 inch.

C. Variation from Design Elevation: Within 1/2 inch.

3.5 FIELD QUALITY CONTROL

A. Section 01400 - Quality Requirements: Requirements for field inspection and testing.

B. Testing by ENGINEER:

1. ENGINEER may select samples of uncompacted fill intended for the Works and samples of compacted fill in the Works.

2. ENGINEER will perform tests in the field and in the laboratory on samples of aggregate to determine if materials meet specification at frequency and methods specified in Article 3.5. Copies of test reports will be supplied to CONTRACTOR on request.

3. Testing by ENGINEER will in no way relieve CONTRACTOR of his responsibility to test all material prior to notifying ENGINEER of materials' suitability for the work involved.

C. Methods of Testing:

1. Maximum dry density will be determined in the laboratory in accordance with ASTM D698.

2. Moisture content in laboratory will be determined in accordance with ASTM D2216.

3. Bulk wet density will be determined in the field in accordance with ASTM D2922

4. Moisture content will be determined in the field in accordance with ASTM D3017.

5. Particle size analysis will be performed in accordance with ASTM C117/136.

D. Frequency of Testing by ENGINEER:

1. At least 1 density test and 1 moisture content determination for each 2,000 cu yd of material required.

2. At least 1 particle size analysis will be made for each 2,000 cu yd of material required.

E. Failure to Meet Specified Requirements: If tests indicate that material specifications have not been achieved or cannot be obtained with equipment in use, procedure being followed, or material being incorporated, remove and replace work and modify operations so that the equipment, procedures, and materials will produce the required results. Additional testing required by ENGINEER will be at no additional cost to OWNER.

F. Proofroll compacted fill surfaces under paving.

3.6 SCHEDULES

A. Under Asphalt Pavement: Compact placed aggregate materials to achieve compaction of 95 percent SMDD.

B. Under Concrete Pavement: Compact placed aggregate materials to achieve compaction of 95 percent SMDD.

PART 4 MEASUREMENT AND PAYMENT

4.1 GENERAL

A. Section 01200 - Price and Payment Procedures: Requirements for measurement and payment.

B. Payment Basis: No separate payment will be made. This section forms part of the lump sum price associated with the civil portion of the project.

END OF SECTION

SECTION 02740

FLEXIBLE PAVEMENT

PART 1 GENERAL

1.1 SECTION INCLUDES

A. Asphaltic wearing and base course.

B. Tack coat.

1.2 REFERENCES

A. Section 01400 - Quality Requirements: Requirements for references.

B. State of New Jersey Department of Transportation Standard Specifications for Road and Bridge Construction.

1.3 DEFINITIONS

A. 'State Standard' in this Section shall mean State of New Jersey Department of Transportation Standard Specifications for Roads and Bridge Construction.

1.4 ENVIRONMENTAL REQUIREMENTS

A. Section 01500 - Temporary Facilities and Controls: Requirements for temporary controls.

B. Comply with weather and ground surface conditions in State Standard.

PART 2 PRODUCTS

2.1 MATERIALS

A. Primer: State of New Jersey Standard, Grades MC-30 or MC-70.

B. Tack Coat: State of New Jersey Standard, Grades RC-70, RC-T, RS-1, SS-1, SS-1h, CSS-1, or CSS-1h.

2.2 ASPHALT PAVING MIX

A. Base Course: State of New Jersey Standard, Type I-2.

B. Wearing Course: State of New Jersey Standard, Type I-4.

PART 3 EXECUTION

3.1 EXAMINATION

A. Section 01700 - Execution Requirements: Requirements for examination.

B. Verify that compacted granular base is dry and ready to support paving and imposed loads.

C. Verify slopes and elevations of granular base are correct.

3.2 PRIMER

A. Apply primer in accordance with State Standards.

B. Apply primer to contact surfaces of curbs, gutters.

C. Use clean sand to blot excess primer.

3.3 TACK COAT

A. Apply tack coat in accordance with State Standards.

B. Apply tack coat to contact surfaces of curbs and gutters.

C. Coat surfaces of manhole and catch basin frames with oil to prevent bond with asphalt pavement. Do not tack coat these surfaces.

3.4 PLACING ASPHALT PAVEMENT

A. Install Works in accordance with State Standards.

B. Place base course to 3 inch compacted thickness.

C. Place wearing course to 2 inch compacted thickness.

3.5 COMPACTION

A. Compact to State Standards.

3.6 TOLERANCES

A. Flatness: Maximum variation of 1/4 inch measured with 10-foot straight edge.

B. Scheduled Compacted Thickness: Within 1/4 inch.

C. Variation from True Elevation: Within 1/2 inch.

3.7 PROTECTION OF FINISHED WORK

A. Section 01700 - Execution Requirements: Requirements for protecting installed work.

B. Immediately after placement, protect pavement from mechanical injury for 2 days or until surface temperature is less than 140 degrees F.

PART 4 MEASUREMENT AND PAYMENT

4.1 GENERAL

A. Section 01200 - Price and Payment Procedures: Requirements for measurement and payment.

B. Payment Basis: No separate payment will be made. This section forms part of the lump sum price associated with the civil portion of the project.

END OF SECTION

SECTION 02921

SEEDING

PART 1 GENERAL

1.1 SECTION INCLUDES

A. Preparation of subgrade.

B. Placing topsoil.

C. Seeding.

D. Mulching and fertilizing.

E. Maintenance.

1.2 REFERENCES

A. Section 01400 - Quality Requirements: Requirements for references.

B. American Society for Testing and Materials (ASTM):

1. D2974 - Standard Test Method for Moisture, Ash and Organic Matter of Peat and Other Organic Soils.

2. D4972 - Standard Test Method for pH of Soils.

C. United States Environmental Protection Agency (USEPA): SW-846 - Test Method for Evaluating Solid Waste, Physical/Chemical Methods, Third Edition.

D. State of New Jersey Department of Transportation Standard Specifications for Road and Bridge Construction.

1.3 DEFINITIONS

A. Weeds: Include, but are not limited to, Dandelion, Jimsonweed, Quackgrass, Horsetail, Morning Glory, Rush Grass, Mustard, Lambsquarter, Chickweed, Cress, Crabgrass, Canadian Thistle, Nutgrass, Poison Oak, Blackberry, Tansy Ragwort, Bermuda Grass, Johnson Grass, Poison Ivy, Nut Sedge, Nimble Will, Bindweed, Bent Grass, Wild Garlic, Perennial Sorrel, and Brome Grass.

B. Noxious Weeds:

1. Harmful, undesirable, hard to control.

2. Include but are not limited to: Johnson Grass or Johnson Grass Crosses, Canadian Thistle, Quackgrass, Wild Garlic and Wild Onion, Bermuda Grass, Annual Blue Grass, Corn Cockle, Dodder, and Blindweed.

C. 'State Standard' in this Section shall mean State of New Jersey Department of Transportation Standard Specifications for Road and Bridge Construction.

1.4 PROGRESS SUBMITTALS

A. Section 01300 - Administrative Requirements: Requirements for progress submittals.

B. Seeding and Erosion Control Plan: At least 14 days prior to placing topsoil, submit to ENGINEER for approval CONTRACTOR's Seeding and Erosion Control Plan including, but not limited to, the following:

1. Seed mixture(s) and fertilizers for the Site and restoration areas and application rates.

2. Time of year for planting such mixtures.

3. Methods of preparing seedbed, seeding, sodding, and rolling seeded and sodded areas.

4. Methods to provide erosion control until seed is placed and grass is established (i.e., use of any or a combination of emulsifiers, tackifiers, mulches, adhesives, nurse crop seed, and erosion control matting or blankets).

C. Seed Certificates: At least 14 days prior to seeding submit certificates from seed vendors for each seed mixture required, stating botanical and common name, percentage by weight and percentages of purity, germination, and weed seed for each species.

D. Fertilizer Certificate: At least 14 days prior to placing fertilizer, submit certificate confirming conformance with recommendations provided by laboratory based on topsoil analysis.

E. Test Results: Submit test results of imported topsoil. Indicate, by test results, information necessary to determine suitability, including, but not limited to, organic content, pH, phosphorus, potassium, calcium, and magnesium; and laboratory or supplier recommendation for fertilizer application rate for specified seed mixture.

1.5 CLOSEOUT SUBMITTALS

A. Section 01700 - Execution Requirements: Requirements for closeout submittals.

B. Maintenance Data: Include maintenance instructions, cutting method, and maximum grass height; types, application frequency, and recommended coverage of fertilizer.

1.6 QUALITY ASSURANCE

A. Perform work of this Section in accordance with State Standards.

B. Provide seed mixture in containers showing percentage of seed mix, year of production, net weight, date of packaging, and location of packaging.

1.7 QUALIFICATIONS

A. Section 01800 – Facility Operation: Requirements for qualifications.

B. Seed Producer: Established vendor capable of providing adequate seed quality and quantities.

C. Fertilizer: Established vendor capable of providing adequate fertilizer quality and quantities.

D. Installer: Company specializing in planting and establishment of multiple acre grading and planting projects with 5 years documented experience.

1.8 REGULATORY REQUIREMENTS

A. Comply with regulatory agencies for fertilizer composition.

1.9 DELIVERY, STORAGE, AND HANDLING

A. Section 01600 - Product Requirements: Requirements for transporting, handling, storing, and protecting products.

B. Deliver grass seed mixture in original sealed containers bearing seed Supplier's label and certificate indicating the content of species, grade, and mass. Seed in damaged packaging will be rejected. Label containers showing:

1. Analysis of seed mixture.
2. Percentage of pure seed.
3. Percentage of weeds.
4. Year of production.
5. Net weight.
6. Date when tagged and location.
7. Percentage germination.
8. Name and address of distributor.

C. Deliver fertilizer in waterproof bags showing weight, chemical analysis, and name of manufacturer.

D. Deliver mulch and erosion control agent in moisture-proof containers showing manufacturer, content, and net weight (air dry).

E. Deliver erosion control blankets in a rolled mat form protected with an outer waterproof wrap bearing manufacturer's label indicating product name.

F. Store materials in accordance with manufacturer's instructions and in a manner to prevent damage or deterioration.

G. Remove from Site seed which has become wet, moldy, or otherwise damaged in transit or storage.

H. Store seed in weatherproof enclosures.

1.10 ENVIRONMENTAL REQUIREMENTS

A. Section 01500 - Temporary Facilities and Controls: Requirements for temporary controls.

B. Do not apply materials over snow, ice, frozen ground, or standing water.

C. Do not apply seed slurry when wind conditions are such that material would be carried beyond designated area or that materials would not be uniformly applied.

1.11 SEQUENCING AND SCHEDULING

A. Section 01300 - Administrative Requirements: Requirements for coordination.

B. Schedule topsoil placing to permit seeding operations under optimum conditions during normal planting seasons.

C. Coordinate planting with specified maintenance periods to provide maintenance until acceptance by ENGINEER.

D. Seed areas within 10 days of completion of topsoiling.

PART 2 PRODUCTS

2.1 SEED MIXTURE

A. Mixture of the following New Jersey Department of Transportation Mix Type A-4:

1. Spread Fescue: 30 percent by dry weight.

2. Chewing or Hard Fescue: 30 percent by dry weight.

3. Kentucky Bluegrass: 30 percent by dry weight.

4. Perennial Rye: 10 percent by dry weight.

B. Grass Seed: Fresh, clean, new-crop seed harvested previous year complying with the tolerance for purity and germination established by Official Seed Analysis of North America; minimum germination of 75 percent and minimum purity of 97 percent; obtained from an approved seed house.

C. Weed Seed Content: Not over 0.25 percent and free of noxious weeds.

2.2 TOPSOIL

A. Fertile, agricultural soil, typical for locality, capable of sustaining vigorous plant growth, taken from drained Site; free of subsoil, stumps, brush, stones, lumps, clay or impurities, plants, weeds, roots, and other extraneous matter with any dimension greater than two inches; pH value minimum of 5.4 and maximum of 7, organic content minimum of 5 percent and maximum of 20 percent.

B. Topsoil shall be free of contaminated material and construction debris.

2.3 MULCHING MATERIAL

A. Straw Mulch: Oat or wheat, free from weeds, foreign matter detrimental to plant life, and dry; seasoned for spreading with mulch blower equipment.

2.4 FERTILIZER

A. Granular form, dry, free flowing, and free from lumps.

B. Recommended for grass, with 50 percent of the elements derived from organic sources; of proportion necessary to eliminate any deficiencies of topsoil as indicated in Paragraph1.4 E.

2.5 WATER

A. Clean, fresh, and free of any contaminants and substances or matter which could inhibit germination and vigorous growth of grass.

2.6 ACCESSORIES

A. Lime (if required based on topsoil analysis): Ground agricultural limestone, minimum 85 percent of total carbonates graded as follows:

Percent Passing By Weight	*Sieve Size*
90	No. 18
50	No. 120

2.7 SOURCE QUALITY CONTROL

A. Section 01400 - Quality Requirements: Requirements for source testing and analysis of mix formulation for hydroseeding.

B. Analyze topsoil for organic content, pH, potassium, phosphorus, calcium, and magnesium at a rate of 1 test for each 2 acres of topsoil placement.

C. Test in accordance with the following methodology:

Parameter	*Test Method*
Organic Content	ASTM D2974
pH	ASTM D4972

PART 3 EXECUTION

3.1 EXAMINATION

A. Section 01700 - Execution Requirements: Requirements for examination.

B. Verify that prepared soil base is ready to receive work of this Section.

3.2 PREPARATION - SUBGRADE

A. Prepare subgrade to eliminate uneven areas and low spots. Maintain lines, levels, profiles, and contours. Make changes in grade gradual. Blend slopes into level areas.

B. Remove foreign materials, weeds, and undesirable plants and their roots. Remove contaminated soil.

C. Scarify subgrade to a depth of 3 inches where topsoil shall be placed. Repeat cultivation in areas where equipment, used for hauling and spreading topsoil, has compacted subsoil.

D. Remove surface debris, roots, vegetation, lumps, and stones in excess of 1 inch.

E. Obtain ENGINEER's approval of topsoil grade and depth before starting seeding.

3.3 PLACING TOPSOIL

A. Spread topsoil to a minimum settled depth of 4 inches over area to be seeded. Rake until smooth.

B. Place topsoil during dry weather and on dry, unfrozen subgrade.

C. Remove vegetable matter and foreign non-organic material from topsoil while spreading.

D. Grade topsoil to eliminate rough, low, or soft areas, and to ensure positive drainage.

3.4 SEEDING

A. Apply seed at a rate of 150 pounds per acre evenly in 2 intersecting directions. Rake in lightly.

B. Apply seed by broadcasting. Rake in lightly.

C. Do not seed areas in excess of that which can be mulched on same day.

D. Do not sow immediately following rain or when ground is too dry.

E. Apply seed when winds do not exceed 5 miles per hour using equipment suitable for area involved.

F. Measure quantities of material by weight or weight-calibrated volume measurement.

3.5 FERTILIZING

A. Apply fertilizer prior to seeding in accordance with laboratory recommendations based on soil analysis by CONTRACTOR and approved by ENGINEER.

B. Apply after smooth raking of topsoil.

C. Do not apply fertilizer at same time or with same machine used to apply seed.

D. Mix thoroughly into upper 2 inches of topsoil.

E. Lightly water to aid the dissipation of fertilizer.

3.6 MULCHING

A. Immediately following seeding, apply mulch to a thickness of 1/8 inches. Maintain clear of shrubs and trees.

B. Apply water with a fine spray immediately after each area has been mulched. Saturate to 4 inches of soil.

3.7 MAINTENANCE

A. Start maintenance immediately after area seeded.

B. Maintain seeded area for not less than the period stated below and longer, as required to establish an acceptable stand, as determined by ENGINEER:

1. Not less than 60 days after last area seeded.

2. If planted in fall and not given full 60 days of maintenance, or if not considered acceptable by ENGINEER as specified in Paragraph 3.9 E, at completion of 60 days continue maintenance the following spring until acceptable vegetative cover is established.

C. Maintain vegetative cover by watering, fertilizing, weeding, mowing, trimming, overseeding, and other operations such as rolling, regrading, and replanting as required to establish a smooth, acceptable grassed surface, free of eroded or bare areas.

D. Cutting Height: Mow vegetative cover as soon as there is enough top growth to cut with mower set at the specified height for the principal species planted. Repeat mowing as required to maintain specified height. Do not remove more than 1/3 of grass height. Do not mow when grass is wet. Time initial and subsequent mowings as required to maintain the following grass height:

1. Mow grass at 4 to 5-inch height. Do not mow lower than 4 inches.

E. Vegetative cover will be accepted by ENGINEER provided all requirements have been complied with, including completion of 60-day maintenance period, and the following.

1. Vegetative cover is properly established.

2. Turf is free of eroded, bare, or dead spots and 98 percent free of weeds.

3. No surface is visible when vegetative cover has been cut to a height of 4 to 5 inches.

3.8 CLEANING

A. Section 01700 - Execution Requirements: Requirements for cleaning installed work.

B. Clean up immediately, soil, mulch, broken sod, or other debris spilled onto pavement and dispose of deleterious materials.

C. Take precautions and prevent contamination by seeding and mulching slurry of structures, signs, guardrails, fences, utilities, or other surfaces not specified to be landscaped.

D. Where contamination occurs, remove seeding slurry to satisfaction of, and by means approved by ENGINEER.

3.9 PROTECTION OF FINISHED WORK

A. Section 01700 - Execution Requirements: Requirements for protecting installed work.

B. Protect landscaped areas from damage.

PART 4 MEASUREMENT AND PAYMENT

4.1 GENERAL

A. Section 01200 - Price and Payment Procedures: Requirements for measurement and payment.

B. Payment Basis: No separate payment will be made. This section forms part of the lump sum price associated with the civil portion of the project.

END OF SECTION

MORRIS COUNTY SOIL CONSERVATION DISTRICT
APPLICATION FOR SOIL EROSION AND SEDIMENT CONTROL PLAN CERTIFICATION

Tab 7 – Request for Authorization (RFA) Form: Stormwater Discharge Associated with Construction Activity

FOR DISTRICT USE ONLY

SCD Name: _____

SCD RFA # _____

FEE Paid: _____

Check # _____

Voucher # _____

Date RFA Rec'd: _____

RFA Cert. Date: _____

Ch. 251 App. # _____

N.J. Department of Environmental Protection
Bureau of Nonpoint Pollution Control
in cooperation with the
N.J. Department of Agriculture
State Soil Conservation Committee
and Soil Conservation Districts

Request for Authorization (RFA) Form

NJPDES General Permit No. NJG0088323

Stormwater Discharge Associated with Construction and Mining Activity

Please follow all instructions carefully. Omissions may delay your permit authorization request. **SIGN AND DATE** where indicated on page 3. **PRINT OR TYPE** all information. Submit the completed RFA to the appropriate Soil Conservation District office listed on page 4. Attach additional sheets as necessary.

1. Location of Project or Facility

A. Project or Facility Name Rockaway Borough Superfund Site: East Main/Wall Street Plume Remediation

B. Street Address w/number (No PO Box #'s) Union Street at Ogden Avenue

C. Municipality Rockaway Borough D. County Morris

E. Block Number 14, 45 F. Lot Number 18, 13

G. ZIP Code 07866 H. Contact Person Brian Quinn

I. Telephone Number (212) 637-4381 J. Fax Number (212) 637-4429

2. Owner(s) of Project or Facility

A. Name United States Environmental Protection Agency

B. Permanent Legal Address 290 Broadway

C. City or Town New York D. State NY E. ZIP Code 10007

F. Contact Person Brian Quinn

G. Telephone Number (212) 637-4381 H. Fax Number (212) 637-4429

I. Parent Company N/A Telephone Number ( )

Mailing Address _____ Fax Number ( )

City or Town _____ State _____ ZIP Code _____

RFA_CONST_2_26_04

Request for Authorization (RFA) Form
NJPDES General Permit No. NJG0088323
Stormwater Discharge Associated with Construction and Mining Activity

3. Operating Entity *

A. Name Cape Environmental, Inc.

B. Permanent Legal Address 6851 Oak Hall Lane

C. City or Town Columbia D. State MD E. ZIP Code 21045

F. Contact Person David Bettendorf

G. Telephone Number (443) 276-1994 H. Fax Number (443) 276-2078

I. Parent Company N/A Telephone Number ( )

Mailing Address _____ Fax Number ( )

City or Town _____ State _____ ZIP Code _____

*Note - The Operating Entity has operational control over site specifications or over those daily activities necessary to ensure compliance with permit conditions.

4. Description of Current and Proposed Land Use

A. Proposed Use (check the applicable category(ies))

(1) Residential Dwelling: ____ Single Family ____ Multi Family

(2) ____ Commercial Facility (3) ____ Industrial Facility (4) ____ Mining or Quarry

(5) ____ Public School, Religious or Charitable Institution

(6) Other (Specify) Groundwater treatment facility and associated piping and extraction wells

B. Area of Disturbance (acres) 1.15

C. Describe the current land use and general nature of disturbance activity
Currently Borough property and public right-of-way. Trenching will be performed to install piping, and a treatment building will be built.

D. Stormwater discharges to Rockaway River watershed.

Major Water Body: Rockaway River

5. Coordinates of Center of Site in State Plane Coordinates or Decimal Degrees (select one):

X; (Latitude) 489402 Y; (Longitude) 753572

6. Attachments

A. $300.00 Fee - Payable to "Treasurer - State of New Jersey"

(Circle payment type and enter document number below)
Check No. * _____ Voucher No. _____

*Federal Superfund Site. Not Applicable.

For information contact the local Soil Conservation District (see page 4)

RFA_CONST_2_26_04

RFA Certification
Construction General Permit
NJPDES General Permit No. NJG0088323

"I certify under penalty of law that this Request for Authorization and all attached documents were prepared under my direction or supervision in accordance with a system designed to assure that qualified personnel properly gather and evaluate the information submitted. Based on my inquiry of the person or persons who manage the system, or those persons directly responsible for gathering the information, the information submitted is, to the best of my knowledge and belief, true, accurate and complete. As far as I know, none of the stormwater discharges for which this Request for Authorization is submitted are excluded from authorization by part I.A.2, A.3 or B of NJPDES Permit No. NJG0088323.

"I am aware that pursuant to the Water Pollution Control Act (see N.J.S.A. 58:10A-10f(2) and (3)), there are significant civil and criminal penalties for making a false statement, representation or certification in any application, record, or other document filed or required to be maintained under that Act, including fines and/or imprisonment."

WHO MUST SIGN?

FOR A CORPORATION: a "responsible corporate officer" or duly authorized representative. A "responsible corporate officer" is (i) a president, secretary, treasurer, or vice-president of the corporation in charge of a principal business function, or any other person who performs similar policy or decision-making functions for the corporation; or (ii) the manager of one or more manufacturing, production, or operating facilities employing more than 250 persons or having gross annual sales or expenditures exceeding $25 million (in second-quarter 1980 dollars), if authority to sign documents has been assigned or delegated to the manager in accordance with corporate procedures.

FOR A PARTNERSHIP OR SOLE PROPRIETORSHIP: a general partner or the proprietor, respectively, or duly authorized representative.

FOR A MUNICIPALITY, STATE, FEDERAL OR OTHER PUBLIC AGENCY: either a principal executive officer or ranking elected official, or duly authorized representative.

A "responsible corporate officer", general partner, proprietor, principal executive officer of a public agency, or ranking elected official may assign his or her signatory authority for this Certification to a duly authorized representative, which is a named person or generic position having overall responsibility for facility operation or the permittee's environmental matters, by submitting a letter to the Soil Conservation District (see page 4) stating said authority and naming the person or position.

Facility Name: Rockaway Borough Superfund Site: East Main/Wall Street Plume Remediation

(print)

U.S. Environmental Protection Agency

(print, if applicable, name of corporation, partnership, or public agency submitting this certification)

(signature) (date) (print name)

RFA_CONST_2_26_04

APPENDIX C

TEMPORARY SITE FACILITY LAYOUT PLAN AND SECURITY PLAN

1.0 TEMPORARY SITE FACILITY LAYOUT PLAN

All temporary site facilities will be located at a property between Lakeside Drive and Wall Street (address is 9A Wall Street). All work will be performed in accordance with the Contract Documents. Refer to the SSHP for the location and directions to the nearest emergency medical facility. Drawings showing the location and configuration of the temporary construction facilities have been included at the end of this appendix (Figures 1 & 2).

1.1 Field Office/Lay-Down Area

All temporary construction facilities will be located at a property between Lakeside Drive and Wall Street (address is 9A Wall Street) and situated within the predetermined 116' x 132' footprint "Groundwater Remediation System Laydown Yard" as indicated on Figure 2 included at the end of this appendix, Temporary facilities will consist of two mobile office trailers with one tool storage container (conex box), a decontamination pad, and additional equipment and material staging area. The area will be fenced in with 8-foot-high chain-link fencing for security. All fencing will meet the requirement of the Contract Documents.

Equipment and furniture will be provided in accordance with the Contract Documents. Electrical power will be brought into the office trailers from a pole that will be installed as needed to access the trailers. All connections to the office trailers from the power source will be made by a New Jersey licensed electrician.

Sanitary facilities (e.g. Port-A-Johns) will be located within the laydown area. The portable toilet facilities will be equipped with a hand-washing station and will be cleaned/pumped-out on a scheduled basis.

All employee postings and bulletin boards will be located in this area adjacent to or inside the field office. Offices will be supplied with electric and telephone services. The area will be equipped with adequate outdoor security lighting.

A temporary lay-down area for materials (e.g., piping, fittings) will be located at the laydown area.

1.2 Limited Use and Non-Use Areas

The usage of areas outside of the anticipated limits of disturbance will be prohibited unless otherwise directed by the COR. All sensitive areas (e.g., historical) to be preserved within the limits of disturbance will be demarked with signs, cones, and/or a fence, as appropriate, to protect the areas of limited disturbance and non-disturbance.

Features within the authorized work area that require protection will be surveyed and recorded by CAPE during the joint condition survey conducted by the COR and CAPE personnel. Before the start of any onsite construction, these areas will be appropriately marked and site personnel will be informed of their need for protection.

1.3 Construction Entrances and Access Ways

The laydown area is located in a paved parking lot adjoining local roads. The entrance way to the laydown area is indicated on the drawings located in Figure 2 at end of this appendix.

1.4 Waste Disposal

Sanitary facilities and non-hazardous waste disposal containers (dumpsters) will be located inside of the field office/lay-down area. Refer to the Transportation Plan in Appendix D for specifics regarding waste management practices.

1.5 Removal of Temporary Construction Facilities

Upon the conclusion of construction activities, all storage facilities, containment structures, office trailers, port-a-johns, waste materials, stored materials, utilities, barricades, and signs will be dismantled and removed from the project site. Staging areas will be properly cleaned up and graded to conform to adjacent areas. Such areas will be seeded. The condition of these areas will be left so as not to detract from the appearance of the surrounding areas.

2.0 SECURITY PLAN

The temporary site facility will be fenced in with 8-foot-high chain-link fencing for security. The dimensions of the area are approximately 116 x 132 feet. All fencing will meet the requirements of the Contract Documents. The area will be equipped with adequate outdoor security lighting.

All equipment (backhoes, excavators, drill rig) will be staged in the secured area over night. No equipment will be left outside of the temporary site facility area overnight or on weekends unless the position of the equipment is essential in maintaining the quality/integrity of the work item it is being used to construct (drill rig – well).

All work areas outside of the temporary site facility will be barricaded off at the end of each workday. All trenches and excavations will be opened only so far as they can be backfilled by the end of the work shift or covered with road plates. Sub-grade will be brought to the level of existing grade on a temporary basis until an adequate quantity of paving or resurfacing can be reasonably accomplished. If it becomes necessary for excavations to remain open, all areas with surface elevation breaks/differences will be fenced or barricaded off from pedestrian use.

C:\IMS\GIS\Rockaway\projects\truck_route.mxd

CAPE

0 0.05 0.1 0.2 0.3 Miles

N

Figure 1
Project Area
Rockaway Borough Superfund Site

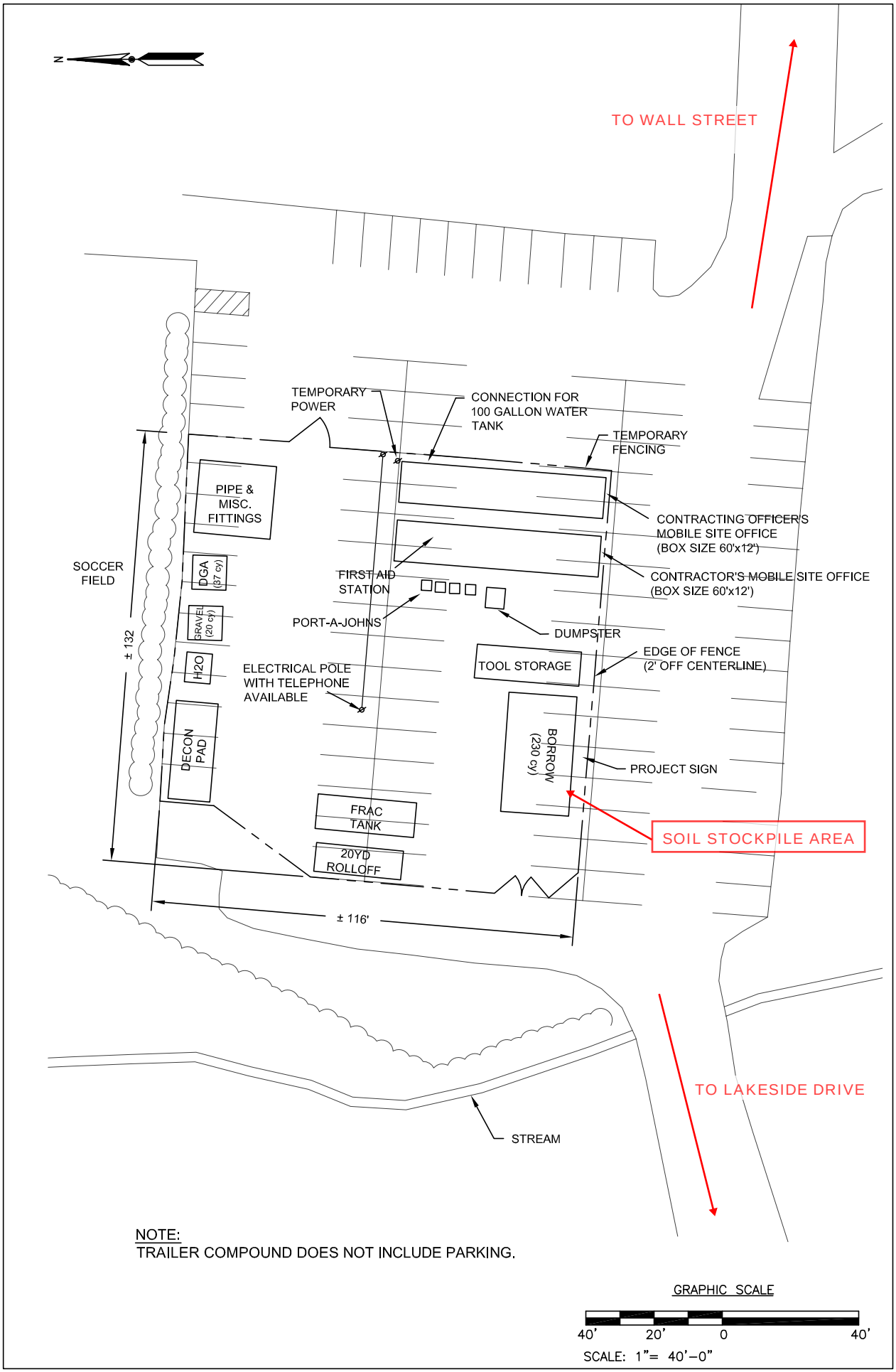

NOTE:
TRAILER COMPOUND DOES NOT INCLUDE PARKING.

GRAPHIC SCALE

40' 20' 0 40'

SCALE: 1"= 40'-0"

CAPE

180 Gordon Drive
Suite 102
Exton, PA 19341
(610) 594-8606

REVISIONS:

No.	Date	Remarks
1	5/11/07	ISSUE FOR CONSTRUCTION
2	6/6/07	TEMPORARY POWER

US ARMY CORPS OF ENGINEERS
NEW YORK DISTRICT

PROJECT NAME

REMEDIAL ACTION ACTIVITIES FOR THE EAST MAIN/WALL STREET PLUME OF THE ROCKAWAY BOROUGH WELL FIELD SUPERFUND SITE MORRIS COUNTY, NEW JERSEY

SHEET TITLE

GROUNDWATER REMEDIATION SYSTEM LAYDOWN YARD

CONTRACT NO:

JOB NO:

CHECKED BY:	DRAWN BY:
C.MCNEIL	N.LOOS
DATE: 5/1/07	FILE NAME: LAYDOWN

FIGURE:

FIGURE 2

APPENDIX D
TRANSPORTATION PLAN

1.0 INTRODUCTION

The purpose of this plan is to provide a comprehensive understanding of the offsite disposal requirements and criteria to be met on the site. This includes offsite waste disposal practices and routes of transportation. This plan has been prepared to meet or exceed the criteria established in Section 02120 of the Contract Specifications. Please refer to Section 2.0 of the EPP (Appendix A), Contaminant Prevention and Spill Control Plan, for emergency procedures associated with emergency response and clean-up criteria. Specific hauling routes and disposal requirements are explained here.

2.0 OFFSITE TRANSPORTATION AND DISPOSAL

For waste streams that must be disposed of offsite, the following information applies.

2.1 Disposal Schedule

Materials identified as hazardous must be disposed of within 90 days of being generated. All other material will be disposed of on an as-needed basis.

2.2 Hazardous Waste Manifest Package

It is not anticipated that there will be hazardous waste on this site. However, in the event that some is encountered, the following procedures will be followed. CAPE will prepare manifests for the transportation and disposal of hazardous wastes in accordance with the EPA and DOT requirements for signature by the generator. The principal components of the completed manifest package include:

- Waste profile sheets
- Waste code
- Waste disposal characterization
- Residual waste manifests
- Shipping papers
- Land disposal restriction notification and certification form.

Residual waste manifests, waste profile sheets, land disposal restriction notification and certification forms will list EPA as the generator and will be signed by a designated representative of the EPA or USACE. CAPE will provide a notice of shipping to the designated representative of the EPA or the USACE.

The supporting information, which will be presented in the Completion Report, will contain the following, at a minimum:

- Date of initial waste generation
- Description of the process that generated the waste
- All analytical data and/or process knowledge used to characterize the wastes, including QC data
- Dates samples were collected
- Description of sampling location(s), sampling methods, and equipment used
- Description of sample handling techniques, including containerization, preservation, and chain of custody
- Correspondence supporting waste classification determination, as appropriate
- Specific type of inner and outer packaging
- Markings, labeling, and placards offered by the transporter.

2.3 Transportation

For wastes determined to be non-hazardous, the disposal contractor will be responsible for picking up, hauling, and disposing of the material. No manifesting, packaging, labeling, or placarding will apply to this type of disposal.

If the wastes are determined to be hazardous, the following procedures will be followed. The transport documentation and transport vehicle will be inspected before shipment of the hazardous wastes to ensure that the packaging, marking, labeling, handling, and placarding of waste complies with federal, state, and local laws and regulations. CAPE will supervise all on-site activity and document all stages of waste handling by the disposal contractor.

Haul route will vary depending upon the destination of the material. The primary routes for transportation of the materials off site will be via Route I-80. See Figure 1 included at the end of this appendix for acceptable truck routes in the state of New Jersey. Refer to the Contaminant Prevention and Spill Control Plan for information regarding emergency response.

2.4 Reporting Requirements

Non-hazardous Solid Waste Diversion Reports will be made available on site and submitted with the Daily CQC Report. In addition, copies of all applicable documents will be included in the Removal Action Completion Report.

2.5 Tabulated Waste Handling Information

CAPE will maintain a list of all waste materials going off site. Where applicable, this list will include the description, quantity, hazardous waste classification, date the waste was shipped, disposal facility, method of disposal, and date of disposal/destruction. This list will be maintained in the field office.

2.6 Transportation and Disposal Procedures

After the waste leaves Morris County, CAPE will maintain a clear audit trail of the entire disposal operation including, but not limited to:

- Manifest copy(ies)
- Driver information and truck numbers
- Profile sheet(s)
- Certificate of transfer
- Certificate of disposal
- Certification of destruction.

2.7 Discrepancies

Any discrepancies due to differences between the quantities or types of wastes designated on the manifest or shipping papers, and the quantity and type of wastes a facility actually receives must be reported. CAPE will investigate these discrepancies and rectify the identified discrepancy. This information will be presented in the Completion Report.

2.8 Exception Reports

The following procedures will be used for determining if an exception report is needed. On or before Day 35, after the transporter signs the manifest, it will be verified that the generator or the generator's representative has received a copy of the signed manifest from the disposal facility. In the event that a manifest copy documenting receipt of hazardous waste at the offsite disposal facility is not received within 35 calendar days of shipment initiation, the Contractor shall prepare and submit an exception report to the CO within 37 days of shipment initiation. All exception reports will be presented in the Removal Action Completion Report.

3.0 WASTE MANAGEMENT PLAN

The transportation and disposal of waste materials will be conducted in accordance with Section 02120 of the Contract Specifications. Waste prevention and management will be the responsibility of the Site Superintendent.

3.1 Objectives

The objective of this Waste Management Plan is to provide the measures to be taken to practice efficient waste management and reasonable means to divert construction and demolition (C&D) debris from landfills and incinerators, and to facilitate their recycling or reuse. These measures include planning, waste minimization, recycling, and handling waste in a cost-efficient manner. These objectives will be achieved through compliance with local, state, and federal regulations.

This plan details potential waste streams and CAPE's waste management responsibilities including details on the waste management practices that will be implemented for all stages of the project from waste generation to disposal. The SSHO, will serve as the designated Environmental Monitor.

3.2 Regulatory Requirements

Waste generated during demolition and construction will be handled, staged, labeled, transported, and disposed of in full compliance with local, state, and federal regulations. Applicable local, state, and federal regulations governing the treatment, storage, transportation, and disposal of wastes include, but are not necessarily limited to, the following.

- 40 Code of Federal Regulations (CFR) 263: Resource Conservation and Recovery Act (RCRA) Standards Applicable to Hazardous Waste Transporter
- EPA Superfund Off-Site Disposal Policy
- New Jersey Hazardous Waste Management Regulations
- New Jersey Solid Waste Management Regulations
- New Jersey Administrative Code: Title 7, Chapter 26, Subchapter 12
- OSHA Standards 29 CFR 1904, 1910, and 1926
- EPA OSWER Directive No. 9834.11
- 40 CFR 268: RCRA Land Disposal Restrictions
- 40 CFR 270: RCRA regulations controlling the transportation, manifesting, and disposal of hazardous waste
- 49 CFR 171-179: U.S. Department of Transportation (DOT) regulations on the packaging and shipping of hazardous materials and samples
- Hazardous Waste Management Regulations – RCRA Standards Applicable to Generators of Hazardous Waste

- Solid Waste Management Regulations – Soil Debris and Sludge Deposit Requirements and Regulations for the Transportation of Hazardous Materials.

3.3 Anticipated Waste Streams

Part of efficient waste management is to identify the possible waste streams and plan how they will be handled, tested, and characterized for disposal. Five distinct waste streams of material are anticipated to be generated during the project:

- C&D debris
- Secondary wastes
- Decontamination materials/personal protection equipment (PPE)
- Soil and Drill Cuttings
- Well Development/Sampling Water.

All debris with the potential of containing site contaminants will be treated as contaminated until proven otherwise. Before offsite disposal, decontamination material, drill cuttings, and well development/sampling water will undergo the required disposal testing as outlined in the Sampling and Analysis Plan (SAP). Material identified as hazardous through sample analysis will be handled and disposed of as hazardous waste. Refer to the SAP for exact sampling and testing procedures.

3.4 Construction and Demolition Debris

C&D debris will include miscellaneous quantities of steel, wood, concrete, plastic, asphalt, PVC piping, HDPE piping and other building materials. Material generated in large enough quantities will be segregated and recycled. These wastes will be stored in closed-top-type dumpster/containers and emptied on a regularly scheduled basis. Materials from the C&D debris waste steam will be considered as C&D debris and not be tested before disposal.

3.5 Secondary Wastes

Secondary wastes will include non-hazardous trash, office supplies, and miscellaneous construction debris. Quantities will vary depending upon the scheduled work and the number of people on-site. These wastes will be stored in closed-top-type dumpster/containers and emptied on a regularly scheduled basis. Materials from the secondary waste steam will be considered as C&D debris and not be tested before disposal.

3.6 PPE

PPE will consist of the materials generated during groundwater and soil sampling activities due to proper sample collection procedures and is not anticipated to be contaminated.

3.7 Soil and Drill Cuttings

The soil that is generated during trenching and well installation will be treated as if it were contaminated until testing of the material proves it clean. Materials generated in remote areas will be transported to the temporary construction facility laydown area. The material will be placed on the asphalt and covered with plastic in accordance with the SESC plan until a sufficient quantity has been generated for disposal. All material will be stockpiled in this location.

3.8 Well Development/Sampling Water

All water generated through the development and sampling of the newly installed or previously existing monitoring wells will be temporarily stored on site in holding tanks stationed at or near the temporary construction facilities. Water generated at remote sites will be pumped directly into auxiliary tanks and transported to the laydown area where they will be transferred into the larger holding tank. The well development and sampling water will discharged in accordance with the NJPDES BGR Permit.

3.9 Disposal Facility

Through a competitive bidding process, one or more waste disposal subcontracts will be awarded. Subcontracts will include several permitted disposal facilities that offer a range of disposal options (e.g., landfilling, incineration, recycling) for a variety of waste types (e.g., construction debris, nonhazardous waste, hazardous waste). Each disposal facility will be required to present CAPE with a list of analytical requirements required for the facility to accept the waste.

Based on waste stream identification, an appropriate waste disposal facility will be identified. A list of potential disposal facilities provided in the following table:

Waste Stream	Primary Facility	Secondary Facility
Soil boring/well install, trenching and building foundation cut spoils	Soil Safe 378 Route 130 Logan, NJ 08085 NJDEP Permit No.: CBG08003	CES Landfill 99 Commonwealth Rd Hegins, PA 17938 PADEP Permit No: 101615
Wastewater (Well Installation Development Water)	LORCO Petroleum Services 450 South Front Street Elizabeth, NJ 07202 NJ Permit #: 2004001424	
Transportation	Rainbow Transport Corporation 1470 Route 46 Ledgewood , NJ 07852 Waste Transporter Permit No.: NJ-586	Motion Trucking 47 Broad Acre Drive Mount Laurel, NJ 08054

Samples will be collected and analyzed in accordance with the selected facilities acceptance criteria in addition to the requirements for the waste stream noted above. CAPE will then prepare a memorandum for approval by the USACE. This memorandum will include the analytical results, estimated quantity of waste, waste profile sheet(s), and the disposal facilities acceptance letter.

4.0 WASTEWATER MANAGEMENT PLAN

All wastewater generated on site through normal construction practices will be discharged via land application in accordance with all federal, state and local laws. Pretreatment methods include filtering for sediment and erosion controls.

4.1 Construction Wastewater

Wastewater from construction activities will not be discharged into the environment before treatment. Minimal quantities will be generated from concrete chute, and form cleaning. Concrete trucks will be washed off site (batch plant).

4.2 Decontamination Wastewater

Water generated from decontamination measures will be handled in accordance with the SSHP and SAP. This water will be stored on site before disposal. Well development and sampling water will either be disposed of offsite at an approved disposal facility or surface discharged via the NJPDES BGR permit.

4.3 Pump Test Wastewater

Water generated during the pump tests will be discharged to the storm sewers in accordance with the NJPDES BGR permit.

C:\IMS\GIS\Rockaway\projects\truck_route.mxd

CAPE

0 0.05 0.1 0.2 0.3 Miles

N

Figure 1
Project Area
Rockaway Borough Superfund Site

APPENDIX E

EXCAVATION, TRENCHING AND BACKFILL PLAN

1.0 INTRODUCTION

Prior to performing any type of ground-intrusive activity (trenching, excavation), the New Jersey "One Call" system (811 or 800-272-1000) will be utilized for the clearance and location confirmation of all underground utilities. This will include Jersey Central Power and Light (JCP&L), the Rockaway Borough Water Utility, and other local utility organizations responsible for the mark out of underground utility locations. Prior to performing the work, field conditions and utility locations will be verified by all involved CAPE and subcontractor personnel. The verification process will be documented on the Excavation Safety Checklist (Refer to SSHP). All work will be performed in accordance with the Contract Documents.

2.0 EXCAVATION AND TRENCHING

The approximate location of the pipeline trenches and excavation trench details are shown on the construction drawings. Excavated material will be segregated to identify unsuitable backfill material.

An excavator will be used to excavate the pipeline trench. The depth of the trench will be approximately 5 feet to allow the top of the forcemain at a minimum of 4 feet below ground surface (bgs) as indicated on the design drawings. All excavations greater than 4 feet will be sloped or braced for stability. In roadways, a trench or manhole box will be utilized. All structural support systems will be raised above mid diameter of the installed piping prior to moving it ahead in an effort to avoid disturbance and possible separation of joints.

The trench bottom will be continuous, relatively smooth, and free of rocks. In the event that hardpan or boulders are encountered, the trench bottom will be padded using a minimum of 6 inches of tamped sand beneath the pipe. The trench depth will allow for the top of the forcemain pipe to be at least 4 feet bgs. The top of instrumentation and control lines and power lines will be located at approximately 2 feet bgs. Magnetic detector tape with a minimum width of 3 inches will be installed 12 inches below grade and directly above the utility line. The color and warning message of the tape will vary depending upon the utility in conjunction with which it is installed. The color of the tape and the warning message displayed will correctly identify the type of utility located below (e.g., Water line-Blue and silver with warning message “Caution: Buried Water Line”).

The trench will be excavated to the required alignment and depth shown on the construction drawings, and only so far in advance of pipe laying that will allow for testing and backfilling operations to occur while new trench is being excavated. Trenches will not remain open overnight and protective systems will be installed as necessary.

At areas requiring excavation located directly above or adjacent to marked underground utilities, the use of hand tools will be employed. The marked-out utility will be hand excavated within 3 feet of the utility until found and then protected before excavation with equipment can be performed.

3.0 STRUCTURAL EXCAVATION PROCEDURES

All sub-grade preparation will be performed in-the-dry and be completed in such a manner that suitable widths for excavation supports and working clearances are accounted for. When excavations reach the required sub-grade, prior to the placement of any base materials or working mats, the suitability of the existing sub-grade for the anticipated foundation and structural loading will be verified. If deemed unsuitable, direction will be provided by the engineer of record regarding removal and replacement with suitable material.

The top 12 inches of sub-grade will be compacted to a minimum of 95 percent standard Proctor.

4.0 BACKFILL AND COMPACTION

The four types of fill to be utilized on this project are: Type S2 backfill, washed sand, flowable fill, and structural fill. Compaction will be conducted at 90 percent maximum density for common fill and 95 percent maximum density for structural fill, such as in areas under pavement and sidewalks. Backfill will be placed in 6-inch loose lifts for compaction by hand-operated machine compactors and in 8-inch loose lifts for other than hand-operated machines, unless otherwise specified. All types of fill will meet the parameters established in Section 02300 of the contract specifications.

Each lift will be thoroughly compacted prior to the placement of the next layer. Fill and backfill materials will not be placed on frozen surfaces or surfaces covered with snow and/or ice.

Flowable fill will be utilized when existing utilities are too close to the backfill areas to allow proper compaction of the bedding materials.

4.1 Trench Backfill

The use of compaction equipment will be avoided directly above the pipe until 6 inches of washed (bedding) sand has been placed to ensure no local deformation of the pipe. A minimum of 6 inches of washed sand will be maintained around the bottom, top, and sides of the utility lines at all times. Washed sand will conform to the parameters identified in Section 02300 of the contract specifications. The remainder of the trench will be backfilled with Type S2 backfill.

Trench restoration in unpaved areas will have a minimum of 6 inches of topsoil. Restoration in paved areas will consist of the remainder of the trench; up to 1 foot below the bottom of the specified paving, being backfilled with structural fill thoroughly compacted in 6-inch layers. A minimum of 4 inches of dense graded aggregate will be placed below sidewalks or pavement. Areas in and adjacent to streets shall meet the requirements of Section 3.0 of this plan.

4.2 Structural Area Backfilling

Fill and backfill materials placed adjacent to and within 10 feet of all structures, as well as that required beneath building slabs or slabs on grade, will be structural fill placed in 6-inch lifts. Areas in or adjacent to streets will consist of the top 12 inches of backfill being structural fill.

A capillary water barrier consisting of 6 inches of screened gravel will be installed under concrete floors and areaway slabs on grade. The material will be placed directly on top of the sub-grade and compacted with a vibratory plate tamper (minimum of two passes). A 10-mil plastic vapor barrier will be placed on the material prior to concrete placement in an effort to maintain barrier permeability.

4.3 Compaction Testing

Geotechnical testing will be performed and will include density testing, moisture content and field proctors. One density test will be performed for every 500 cubic yards of material placed, with no less than one test per lift, to confirm proper compaction has been achieved. During the trench construction phase, a technician will be on site daily to perform compaction testing. A minimum of one moisture-density test will be performed for every 3,000 cubic yards of material, but no less than one test per borrow area, and sieve analysis will be performed for every 3,000 cubic yards of material utilized.

4.4 Chemical Testing

All materials from offsite borrow areas will be tested in accordance with the SAP and Contract Specification Section 02300, to ensure they are free from chemical contamination prior to being brought on site. A minimum of one chemical test will be performed for every 5,000 cubic yards of each type of material to be used and no less than one test per borrow source. Laboratory results will be submitted to the COR.

4.5 Radiological Testing

All materials from offsite borrow sources will be tested for radiological contamination in accordance with paragraph 1.04C4 of Contract Specification Section 02300. A minimum of one radiological test will be performed for every 5,000 cubic yards of material to be used and no less than one test per borrow area. Laboratory results will be submitted to the COR.

5.0 TOPSOIL

All topsoil excavated from the site will be disposed of according to the waste management plan. Topsoil for restoration will be brought on-site from an approved borrow source.

The topsoil brought in from off-site borrow sources will meet the requirements of NJDOTSS 909.10 and ASTM D 5268 and be tested in accordance with ASTM D 5268 and 4972 for determining particle size, pH, organic matter content, textural class, chemical analysis, soluble salts analysis, and mechanical analysis. This testing will assist in determining if any soil amendments will be required to meet growing requirements. Certificates of compliance with the above parameters will be submitted to the COR.

Topsoil will be uniformly spread, graded, and compacted to the thickness, elevations, and slopes shown on the contract drawings. The topsoil will be placed with a minimum thickness of 6 inches and left free of surface irregularities. The subgrade on which the topsoil is to be placed will be pulverized to a depth of 2 inches by disking or plowing to allow for the bonding of the topsoil to the subsoil. The topsoil shall not be placed when the sub-grade is frozen, excessively wet, extremely dry, or in a condition otherwise detrimental to seeding, planting, or proper grading. The topsoil will be compacted by one pass of a cultipacker, roller, or equivalent.

6.0 PAVING AND RESURFACING

Paving and resurfacing will be required over trenches, full width pavement over the areas indicated on the contract drawings, and any streets, driveways, parking areas, or walkways damaged or disturbed by construction activities. All paving will adhere to the Contract Documents.

A prime coat will be applied to contact surfaces of sub-base courses and be allowed to dry for a period of at least 48 hours or contains moisture not in excess of the amount that will permit uniform distribution and the required penetration. Tack coating of contact surfaces of curbs, gutters, manholes and other structures projecting into the pavement will be applied and allowed to dry until the material has reach a suitable condition of tackiness to receive the pavement. The prime and tack coats will be applied only when ambient air temperatures are above 50 degrees Fahrenheit or when temperatures have not been below 35 degrees Fahrenheit for 12 hours immediately prior to application.

Placement of the bituminous-concrete mixture will be accomplished through the use of an approved bituminous paver and be placed at a temperature of not less than 200 degrees Fahrenheit. Placement will begin along the centerline of the crown or along the highest side of a sloped cross section and be placed in consecutive adjacent strips. In areas containing irregularities or obstructions, placement will be accomplished through the use of heated hand tools.

A three-ton maximum tandem steel wheel vibratory roller will be used to smooth over the freshly placed material. Rolling will be extended to overlap the preceding strip. The material will be smoothed with 1-3 passes of the roller without vibration. Surface smoothness will be within ¼ inch tolerance in the longitudinal and traverse direction. Joints between old and new, or successive days of work, will be made to ensure a continuous bond between the old and new sections. Traverse joints will be offset minimum 24-inches and longitudinal joints minimum 6-inches.

Pavement will be protected from vehicular traffic for at least 6 hours after final rolling. Traffic stripes will be painted to match existing conditions and be performed in accordance with NJDOT Standard Specifications for Road and Bridge Construction. Areas deemed to be deficient will be repaired by cutting the full thickness of the base course and adding fresh paving mixture. The hole will be cut so the sides are perpendicular and parallel to vehicular traffic and the finished grade will conform to grade, smoothness, and density requirements.

72-Hour Start of Land Disturbance Notification

MCSCD No. 07-7173

Project Name East Main / Wall Street Plume Remediation

Project Address Bor. of Rockaway - Union St @ Ogden Avenue

Agent Responsible CAPE ENVIRONMENTAL MANAGEMENT, INC.

Agent's Address 41 PINE STREET, SUITE 110, ROCKAWAY, N.J 07866

Agent's Tel. 973-627-4705 On-Site 732-237-4141

Job Supervisor (On-Site) CHARLES McNEIL (GENERAL SUPERINTENDENT

Anticipated Starting Date 11-22-10

FAILURE TO NOTIFY IS A VIOLATION!

ADDITIONAL FEES WILL BE CHARGED FOR REPEATED INSPECTIONS

TRANSMITTAL OF SHOP DRAWINGS, EQUIPMENT DATA, MATERIAL SAMPLES, OR MANUFACTURER'S CERTIFICATES OF COMPLIANCE

(Read instructions on the reverse side prior to initiating this form)

DATE: 01/12/2012

TRANSMITTAL NO.: 01170-2

SECTION I - REQUEST FOR APPROVAL OF THE FOLLOWING ITEMS

(This section will be initiated by the contractor)

TO: Environmental Residency
US Army Corps of Engineers
214 State Highway 18
East Brunswick, NJ 08816

FROM: CAPE Environmental Management Inc.
180 Gordon Drive, Suite 105
Exton, PA 19341

CONTRACT NO.: W912DQ-05-D-0001 0005

CHECK ONE:
[X] THIS IS A NEW TRANSMITTAL
[ ] THIS IS A RESUBMITTAL OF TRANSMITTAL _____

SPECIFICATION SEC. NO. (Cover only one section with each transmittal): 01170

PROJECT TITLE AND LOCATION: 01-Main Register
Rockaway Wellfield Superfund Site, EM/WS Rockaway Borough, East Main/Wall Street, Morris County, NJ

CHECK ONE: THIS TRANSMITTAL IS
[ ] DR [X] FIO [ ] GA [ ] DA [ ] CR

ITEM NO. a.	DESCRIPTION OF ITEM SUBMITTED (Type size, model number/etc.) b.	MFG OR CONTR. CAT., CURVE DRAWING OR BROCHURE NO. (See instruction no. 8) c.	NO. OF COPIES d.	CONTRACT REFERENCE DOCUMENT: SPEC. PARA. NO. e.	CONTRACT REFERENCE DOCUMENT: DRAWING SHEET NO. f.	FOR CONTRACTOR USE CODE g.	VARIATION (See Instruction No. 6) h.	FOR CE USE CODE i.
6	Building Construction Inspection Tags	RECORDS	3	N/A	N/A	A	N	

REMARKS

Three copies and the original tags provided to the United States Army Corps of Engineers, Attn: Kevin O'Brien @ 21 Pine Street, Suite 121 Rockaway New Jersey 07866. One copy retained for CAPE's project files.

Note: The building construction inspection tags are not listed in the project specifications and are being provided for record. All other inspection tags, not submitted herein, were posted in GWTF & GW-1 by the respective inspector.

I certify that the above submitted items have been reviewed in detail and are correct and in the strict conformance with the contract drawings and specifications except as otherwise stated.

Eric R. Jacobson

NAME AND SIGNATURE OF CONTRACTOR

SECTION II - APPROVAL ACTION

ENCLOSURES RETURNED (List by item No.)	NAME, TITLE AND SIGNATURE OF APPROVING AUTHORITY	DATE

NEW JERSEY UNIFORM CONSTRUCTION CODE

For Information Call:

Permit No. 11-0006

APPROVAL FOR FIRE PROTECTION

	Date	Inspector
[ ] Sprinklers		
[ ] Standpipes		
[ ] Special Supp.		
[ ] Alarm		
[ ] Mechanical		
[ ] Other Rough Alarm	09-13-11	
[ ] Final		

U C C Form F-224A

ACTION OFFICE SUPPLIES, INC (800) 298-1000

Courtesy inspection only

NEW JERSEY UNIFORM CONSTRUCTION CODE

For Information Call: 11/006

Permit No.

APPROVAL FOR BUILDING

	Date	Inspector
[ ] Footing		
[ ] Foundation		
[ ] Frame		
[ ] Mechanical		
[ ] Other Final.	12/5/11	
[ ] Final		

U.C.C. Form F-221A

122 Jackson

NEW JERSEY UNIFORM CONSTRUCTION CODE

For Information Call:

Permit No.

APPROVAL FOR PLUMBING

	Date	Inspector
[ ] Slab		
[ ] Rough		
[ ] Water		
[ ] Gas		
[ ] LPGas Tank		
[ ] Mechanical		
[ ] Sewer		
[ ] Other		
[ ] Other		
[ ] Final	10/12/11	

U.C.C. F223 (rev. 2/03)

NEW JERSEY UNIFORM CONSTRUCTION CODE

For Information Call:

Permit No.

APPROVAL FOR

- [ ] BUILDING
- [x] ELECTRICAL
- [ ] PLUMBING
- [ ] FIRE PROTECTION
- [ ] OTHER

Type of Inspection Ground Ring - Cad Welds

Date 9-13-4 Inspector

Comments:

U.C.C. Form F-220 (8/83)

Borough of Rockaway
One East Main Street
Rockaway NJ 07866
(973)627-8035

CONSTRUCTION PERMIT

Date Issued: 11/16/2010
Permit # 10-00476

IDENTIFICATION Block 14 Lot 18 Qualifier

Work Site	UNION ST	Contractor	Cape Environmental Manage
	ROCKAWAY BORO, NJ 07866	Address	180 Gordon Drive
Owner in Fee	ROCKAWAY BOROUGH		Exton, PA 19341
Address	UNION ST	Telephone	(610) 594-8606
	ROCKAWAY, NJ 07866	Lic. No. or Bldrs. Reg. No. Home Reg. No. or Exemption	
Telephone			

Is hereby granted permission to perform the following work:

[X] BUILDING [X] PLUMBING
[X] ELECTRICAL [ ] FIRE PROTECTION [ ] LEAD HAZARD ABATEMENT
[ ] ELEVATOR DEVICES [ ] ASBESTOS ABATEMENT [X] DEMOLITION

DESCRIPTION OF WORK:
DEMO SERVICES FOR BUILDING, ELECTRIC AND PLUMBING AT THE PUMP STATION. TEMPORARY WATER CONNECTION.

V. FEE SUMMARY (Office Only)

1. Building	$65.00
2. Electrical	$0.00
3. Plumbing	$50.00
4. Fire Protection	$0.00
5. Elevator	$0.00
6. Plan Review	$0.00
7. Subtotal	$115.00
8. DCA State Fee	$0.00
9. Subtotal	$115.00
10. Certificate	$0.00
11. Subtotal	$115.00
12. Exemption (State and Local)	-$115.00
TOTAL	$0.00

NOTE: If construction does not commence within one (1) year of date of issuance, or if construction ceases for a period of six (6) months, this permit is void.

Estimated Cost of Work for Selected Subcode(s) $3,000.00

Construction Official

11/17/10
Date

REQUIRED INSPECTIONS

Construction work must be inspected in accordance with the State Uniform Construction Code Regulation N.J.A.C. 5:23-2.18. This agency will carry out such periodic inspections during the progress of work as are necessary to insure that work installed conforms to the requirements of the Uniform Construction Code.
The owner or other responsible person in charge of work must notify this agency when work is ready for any required inspections specified below. Requests for inspections must be made at least 24 hours prior to the time the inspection is desired. Inspections will be performed within three business days of the time for which they are requested. The work must not proceed in a manner which will preclude the inspection until it has been made and approval given.

☐ Required inspections for all subcodes for one and two family dwellings are the following:

1. The bottom of footing trenches before placement of footings, except that in the case of pile foundations, inspections shall be made in accordance with the requirements of the building subcode.
2. Foundations and all walls up to grade level prior to back filling.
3. Utility services, including septic.
4. All structural framing, connections, wall and roof sheathing and insulation; electrical rough wiring, panel and service installation; rough plumbing. The framing inspection shall take place after the rough electrical and plumbing inspections and after the installation of the heating, ventilation and/or air conditioning duct system. The insulation inspection shall be performed after all other subcode rough inspections and prior to the installation of any interior finish material.

☐ Additional required inspections for all subcodes of construction, for other than one- and two-family dwellings, are fire suppression systems, heat producing devices and Barrier Free subcode accessibility, if applicable.

☐ Required special inspections. The applicant by accepting the permit will be deemed to have consented to these requirements:

☐ A final inspection is required for each applicable subcode area before a final Certificate of Occupancy or Approval may be issued. The final inspections include the installation of all interior and exterior finish materials, sealing of exterior joints, mechanical system and any other required equipment; electrical wiring, devices and fixtures; plumbing pipes, trim and fixtures; tests required by any provisions of the adopted subcodes; Barrier Free accessibility, if applicable; and verification of compliance with NJAC 5.23-3.5, "Posting Structures".

☐ A complete copy of released plans must be kept on the job site.

BUILDING SUBCODE
TECHNICAL SECTION

Date Received
Control # 11-16-2010

Date Issued
Permit # 10-00976

A. IDENTIFICATION—APPLICANT: COMPLETE ALL APPLICABLE INFORMATION. WHEN CHANGING CONTRACTORS, NOTIFY THIS OFFICE. CALL UTILITY DIG NO: 1-800-272-1000.

Block 14 Lot 18 Qualification Code

Work Site Location 122 JACKSON AVENUE
ROCKAWAY, MORRIS COUNTY, N.J.

Owner in Fee ~~ROCKAWAY~~ BOROUGH of ROCKAWAY

Address 1 EAST MAIN ST.
ROCKAWAY, N.J. 07866

Tel. (973) 627-2000

Contractor CAPE ENVIRONMENTAL MANAGEMENT, INC

Address 180 GORDON DRIVE; SUITE #105
EXTON, PA 19341

Tel. (610) 594-8606 FAX (610) 594-8609

Contractor License No. or Builder Registration No. 01008/14410

Federal Emp. No 58-1639130

JOB SUMMARY (Office Use Only)

PLAN REVIEW	Date	Initial
[✓] No Plans Required	11/16/10	JS
[ ] All		
[ ] Footing		
[ ] Foundation		
[ ] Frame		
[ ] Other		

Joint Plan Review Required:
[ ] Elec. [ ] Plumb. [ ] Fire [ ] Elevator

SUBCODE APPROVAL
[ ] CO [ ] CCO [ ] CA
Date:
Approved by:

INSPECTIONS Type:	Dates (Month/Day) Failure	Failure	Approval	Initial
Footing				
Footing Bonding				
Foundation				
Slab				
Frame				
Truss Sys./Bracing				
Barrier-Free				
Insulation				
Finishes -Base Layer				
Finishes -Final				
Energy				
Mechanical				
TCO				
Other				
Final				
Barrier-Free				

B. BUILDING CHARACTERISTICS

Use Group Present Proposed
Constr. Class Present Proposed
No. of Stories 1
Height of Structure 22 Ft.
Area — Largest Floor 760 Sq. Ft.
New Bldg. Area/All Floors Sq. Ft.
Volume of New Structure Cu. Ft.
Total Land Area Disturbed Sq. Ft.

Est. Cost of Bldg. Work:
1. New Bldg. $
2. Rehabilitation $
3. Total (1+ 2) $

C. CERTIFICATION IN LIEU OF OATH

I hereby certify that I am the (agent of) owner of record and am authorized to make this application.

Robert C. Landolfi for CAPE ENV.
Signature

D. TECHNICAL SITE DATA

DESCRIPTION OF WORK

Demo services and Building.

NO FEE - Borough of Rockaway

TYPE OF WORK:
[ ] New Building
[ ] Addition
[ ] Rehabilitation
[ ] Roofing
[ ] Siding
[ ] Fence _____ Height (exceeds 6')
[ ] Sign _____ Sq. Ft.
[ ] Pool
[ ] Asbestos Abatement Subchapter 8
[ ] Lead Haz. Abatement NJAC 5:17
[ ] Other _____
[ ] Demolition

FEE (Office Use Only)
$

Administrative Surcharge $
Minimum Fee $
State Permit Surcharge Fee $
TOTAL FEE $

1 White = Inspector Copy 2 Canary = Office Copy
3 Tag = Office / Other

U.C.C. F110HB3
(rev. 07/03)

PLUMBING SUBCODE
TECHNICAL SECTION

Date Received Control # 11-16-2010

Date Issued Permit # 10-00476

A. IDENTIFICATION—APPLICANT: COMPLETE ALL APPLICABLE INFORMATION. WHEN CHANGING CONTRACTORS, NOTIFY THIS OFFICE. CALL UTILITY DIG NO: 1-800-272-1000.

Block 14 Lot 18 Qualification Code _____

Work Site Location 122 Jackson Ave
Rockaway Morris Cty NJ

Owner in Fee Borough of Rockaway

Address 1 East Main St
Rockaway NJ 07866

Tel (973) 627 2000

Contractor Austin Services, LLC

Address 68 Rt 31 North, Flemington NJ 08822

Tel (908) 284-7844 FAX (908) 2811-2008

Contractor License No. 11189

Federal Emp. No. _____

B. PLUMBING CHARACTERISTICS

Use Group Present _____ Proposed _____

Building Sewer Size _____ Public Sewer _____ Private Septic _____

Water Service Size _____ Public Water _____ Private Well _____

Est. Cost of Plumbing Work $ _____

JOB SUMMARY (Office Use Only)

PLAN REVIEW

[ ] No Plans Required

Joint Plan Review Required:

[ ] Building [ ] Electric

[ ] Fire [ ] Elevator

[ ] Plumbing Plans Approved

Date: 11/10/10

Approved by: BM

SUBCODE APPROVAL

[ ] CO [ ] CCO [ ] CA

Date: _____

Approved by: _____

INSPECTIONS Type:	Dates (Month/Day) Failure	Failure	Approval	Initial
Slab				
Rough				
Water				
Sewer				
Fixtures				
Gas Equipment				
Gas Piping				
LPGas Tank				
Fuel Oil Piping				
Solar				
TCO				

C. CERTIFICATION IN LIEU OF OATH

I hereby certify that I am the (agent of) owner of record and am authorized to make this application and perform the work listed on this application.

Applicant's Signature/Contractor's Seal and Signature

[ ] Licensed Plumbing Contractor [ ] Exempt Applicant

D. TECHNICAL SITE DATA (List of all fixtures.)

NO.	FIXTURE/EQUIPMENT	FEE (Office Use Only)
	Water Closet	$
	Urinal/Bidet	
	Bath Tub	
	Lavatory	
	Shower	
	Floor Drain	
	Sink	
	Dishwasher	
	Drinking Fountain	
	Washing Machine	
	Hose Bibb	
	Water Heater	
	Fuel Oil Piping	
	Gas Piping	
	LPGas Tank	
	Steam Boiler	
	Hot Water Boiler	
	Sewer Pump	
	Interceptor/Separator	
	Backflow Preventer	
	Greasetrap	
	Sewer Connection	
	Water Service Connection	
	Stacks	
	Other	
1	Other Demo water line + temp connection	

Administrative Surcharge $ _____

Minimum Fee $ _____

State Permit Surcharge Fee $ _____

TOTAL FEE $ _____

U.C.C. F130 (rev. 1/04)

1 White = Inspector Copy 2 Canary = Office Copy

3 Pink = Office Copy 4 Gold = Applicant Copy

ELECTRICAL SUBCODE
TECHNICAL SECTION

Date Received Control # 11-16-2010

Date Issued Permit # 10-00476

A. IDENTIFICATION—APPLICANT: COMPLETE ALL APPLICABLE INFORMATION. WHEN CHANGING CONTRACTORS, NOTIFY THIS OFFICE. CALL UTILITY DIG NO: 1-800-272-1000.

Block 19 Lot 10 Qualification Code

Work Site Location 122 JACKSON AVENUE ROCKAWAY, NJ

Owner in Fee: Borough of Rockaway

Tel. (973) 6272000 e-mail

Address 1 E. MAIN STREET ROCKAWAY (street, municipality)

Contractor: Ehrich Electric Inc Tel. (973) 879-1178

Address 27 Merry Lane E. HANOVER (zip code) E-mail

Contractor License No. 10771 Exp. Date 3/12

Home Improvement Contractor Registration No. or Exemption Reason (if applicable):

Federal Emp. ID No. 223172967 FAX: (973) 781-1189

B. ELECTRICAL CHARACTERISTICS

Use Group Present Proposed

[ ] Pole/Pad # [ ] Temporary [ ] Other

Building Occupied as Utility Co. GPU

Est. Cost of Elec. Work $

JOB SUMMARY (Office Use Only)

PLAN REVIEW — Date — Initial

[ ] No Plans Required

Joint Plan Review Required:

[ ] Building [ ] Plumbing

[ ] Fire [ ] Elevator

[ ] Elec. Plans Approved

Date:

Approved by:

SUBCODE APPROVAL

[ ] CO [ ] CCO [ ] CA

Date:

Approved by:

INSPECTIONS Type:	Dates (Month/Day) Failure	Failure	Approval	Initial
Rough				
Barrier-Free				
Trench				
Temp. Serv.				
Constr. Serv.				
TCO				
Other				
Service				
Final				
Barrier-Free				

Temp. Cut-in-Card Date Issued

Final Cut-in-Card Date Issued

Annual Pool Inspection

Date of Grounding and Bonding Certification

C. CERTIFICATION IN LIEU OF OATH

I hereby certify that I am the (agent of) owner of record and am authorized to make this application and perform the work listed on this application.

Applicant's Signature/Contractor's Seal and Signature

[X] Licensed Elec. Contractor [ ] Certif'd Landscape Irrigation Cont'r [ ] Exempt Applicant

D. TECHNICAL SITE DATA

DESCRIPTION OF WORK: Demo electrical system

QTY.	SIZE	ITEMS	FEE (Office Use Only)
		Lighting Fixtures	
		Receptacles	
		Switches	
		Detectors	
		Light Poles	
		Motors—Fract. HP	
		Emergency & Exit Lights	
		Communications Points	
		Alarm Devices/F.A.C. Panel	
		TOTAL NUMBERS	$
		Pool Permit/with UW Lights	
		Storable Pool/Spa/Hot Tub	
		KW Elec. Range/Receptacle	
		KW Oven/Surface Unit	
		KW Elec. Water Heater	
		KW Elec. Dryer/Receptacle	
		KW Dishwasher	
		HP Garbage Disposal	
		KW Central A/C Unit	
		HP/KW Space Heater/Air Handler	
		KW Baseboard Heat	
		HP Motors 1/+ HP	
		KW Transformer/Generator	
		AMP Service	
		AMP Subpanels	
		AMP Motor Control Center	
		KW Elec. Sign/Outline Light	
1	-	Demo Electrical	

Administrative Surcharge $

Minimum Fee $

State Permit Surcharge Fee $

TOTAL FEE $

TO REORDER - ACTION PRINT SOLUTIONS - 800-298-1000

TRANSMITTAL OF SHOP DRAWINGS, EQUIPMENT DATA, MATERIAL SAMPLES, OR MANUFACTURER'S CERTIFICATES OF COMPLIANCE

(Read instructions on the reverse side prior to initiating this form)

DATE: 06/11/2007

TRANSMITTAL NO.: 02670-3

SECTION I - REQUEST FOR APPROVAL OF THE FOLLOWING ITEMS

(This section will be initiated by the contractor)

TO: Environmental Residency
US Army Corps of Engineers
214 State Highway 18
East Brunswick, NJ 08816

FROM: Cape Environmental Management, Inc.
180 Gordon Drive, Suite 102
Exton, PA 19341-2564

CONTRACT NO.: W912DQ-05-D-0001 0005

CHECK ONE:
[X] THIS IS A NEW TRANSMITTAL
[ ] THIS IS A RESUBMITTAL OF TRANSMITTAL _____

SPECIFICATION SEC. NO. (Cover only one section with each transmittal): 02670

PROJECT TITLE AND LOCATION: Rockaway Wellfield Superfund Site, EM/WS Rockaway Borough, East Main/Wall Street, Morris County, NJ

CHECK ONE: THIS TRANSMITTAL IS NDR [X] FIO [ ] GA [ ] DA [ ] CR

ITEM NO. a.	DESCRIPTION OF ITEM SUBMITTED (Type size, model number/etc.) b.	MFG OR CONTR. CAT., CURVE DRAWING OR BROCHURE NO. (See instruction no. 8) c.	NO. OF COPIES d.	CONTRACT REFERENCE DOCUMENT SPEC. PARA. NO. e.	CONTRACT REFERENCE DOCUMENT DRAWING SHEET NO. f.	FOR CONTRACTOR USE CODE g.	VARIATION (See Instruction No. 6) h.	FOR CE USE CODE i.
5	Short Term Water Use PermitbyRule, Rev 0	CERTIFICATES	4	1.3.15		A	N	

REMARKS
Four copies provided to Mr. Michael Johsnon at the following address:
USACE
26 Rustic Mall
Manville, NJ 08835
Application supports pump testing of EW-5, 6, & 7
One copy retained for CAPE Project File Cover Letter distribution completed by CAPE.

I certify that the above submitted items have been reviewed in detail and are correct and in the strict conformance with the contract drawings and specifications except as otherwise stated.

Mike Lamon / Mike D Lamon

NAME AND SIGNATURE OF CONTRACTOR

SECTION II - APPROVAL ACTION

ENCLOSURES RETURNED (List by item No.)	NAME, TITLE AND SIGNATURE OF APPROVING AUTHORITY	DATE

CAPE℠

11 June 2007

Craig Wallace
Site Manager
Bureau of Design and Construction
New Jersey Department of Environmental Protection
401 East State Street
Trenton, New Jersey 08625

Reference: **Short Term Water Use Permit-by-Rule Application**
East Main/Wall Street (EM/WS) Plume of the Rockaway Borough Well Field Superfund Site, Morris County, New Jersey
Contract No. W912DQ-05-D-0001 005

Dear Mr. Wallace:

Cape Environmental Management Inc (CAPE) has been contracted by the US Army Corps of Engineers and the US Environmental Protection Agency (EPA) to conduct remedial action for the East Main/Wall Street (EM/WS) Plume of the Rockaway Borough Well Field Superfund Site located in Morris County, New Jersey. Enclosed with this correspondence is the Short Term Water Use Permit-by-Rule application for your information and records. This application is being submitted to support the pump testing of three extraction wells for a future groundwater treatment system, as depicted in the application.

Under the Superfund Program, Mr. Brian Quinn is serving as the Remedial Project Manager for US EPA and is acting on behalf of the site owner. CAPE, Inc is the prime contractor executing this work. CAPE's point of contact for this work is Mr. David Bettendorf, PG. I can be contacted at 443.276.1994 or via e-mail at dbettendorf@cape-inc.com.

A copy of this application will be provided to Ms. Chelsea DuBrul of the Bureau of Water Allocation, as well as the Rockaway Health Department and the Department of Public Works.

If you have any questions, please feel free to contact me at your convenience.

Sincerely,
Cape Inc

David Bettendorf, PG
Project Manager

Enclosure

cc: Chelsea DuBrul, NJDEP Bureau of Water Allocation
Rockaway Department of Health
Joe Rossi, Rockaway Department of Public Works
Michael Johnson, US Army Corps of Engineers
Brian Quinn, US Environmental Protection Agency
CAPE Project File

180 Gordon Drive, Suite 102 ▲ Exton, Pennsylvania 19341
(610) 594-8606 ▲ Fax (610) 594-8609

New Jersey Department of Environmental Protection
Water Supply Administration - Bureau of Water Allocation
P.O. Box 426, Trenton, New Jersey 08625-0426 (609) 292-2957

SHORT TERM WATER USE PERMIT-BY-RULE

This form is, once it is completed and submitted, constitutes permit-by-rule for the diversion of 100,000 gallons of water per day for periods of less than 31 days annually. This form must be submitted 30 days prior to the start of the diversion activity.

In accordance with N.J.A.C. 7:19-2.17(a)2, any well or surface water supply system which becomes damaged, dry, has reduced capacity, reduced water quality or is otherwise rendered unusable as a result of this diversion shall be repaired or replaced at the expense of the owner of the project.

NOTE: If the total duration of the diversion activity exceeds 30 days, the owner is responsible for obtaining a Water Allocation Permit. The owner of the project shall be subject to fines if pumping is commenced prior to obtaining this permit.

1. General Information

Owner/Facility Name U.S. Environmental Protection Agency
Address 290 Broadway
New York, NY 10007-1866
Contact Name Brian Quinn Telephone No. 212-637-4381
Estimated Start Date July 20, 2007 Estimated Completion Date August 14, 2007

Location:
Municipality Rockaway Borough County Morris County

An 8-1/2" x 11" photocopy of the portion of the USGS quadrangle map indicating the exact location of the diversion sources must be attached.

Diversion is to be used for the following purpose:
Extraction well pump tests for a groundwater treatment facility

2. Diversion Sources: (Attach additional sheets if necessary)

a. Groundwater

Dewatering System/ Well Permit No.	Well Name	Depth (feet)	Screen Interval	Capacity (gpm)	Formation
2500067387	EW-5	95	75-90	30	Unconsolidated deposits of the terminal moraine, above the Rockaway formation
2500067388	EW-6	80	60-75	120	
2500067386	EW-7	95	75-90	60	

b. Surface Water

Stream or Pond Name	Pump Capacity gpm

The owner is also responsible for:

- ___ notifying their local Health Department of the proposed diversion;
- ___ notifying all well owners within the estimated zone of influence of the diversion;
- ___ investigating valid complaints of interference and reporting to the Bureau of Water Allocation on the findings. Wells which have been adversely impacted as a result of the diversion shall be repaired or replaced; and
- ___ upon completion of the pumping activity, a Short Term Water Use Report (Form BWA-004) must be submitted.

A COPY OF THIS COMPLETED FORM MUST BE KEPT AT THE WORKSITE AS NO FORMAL PERMIT WILL BE ISSUED FOR THIS ACTIVITY.

C:\MS\GIS\Rockaway\projects\USGS_topo.mxd

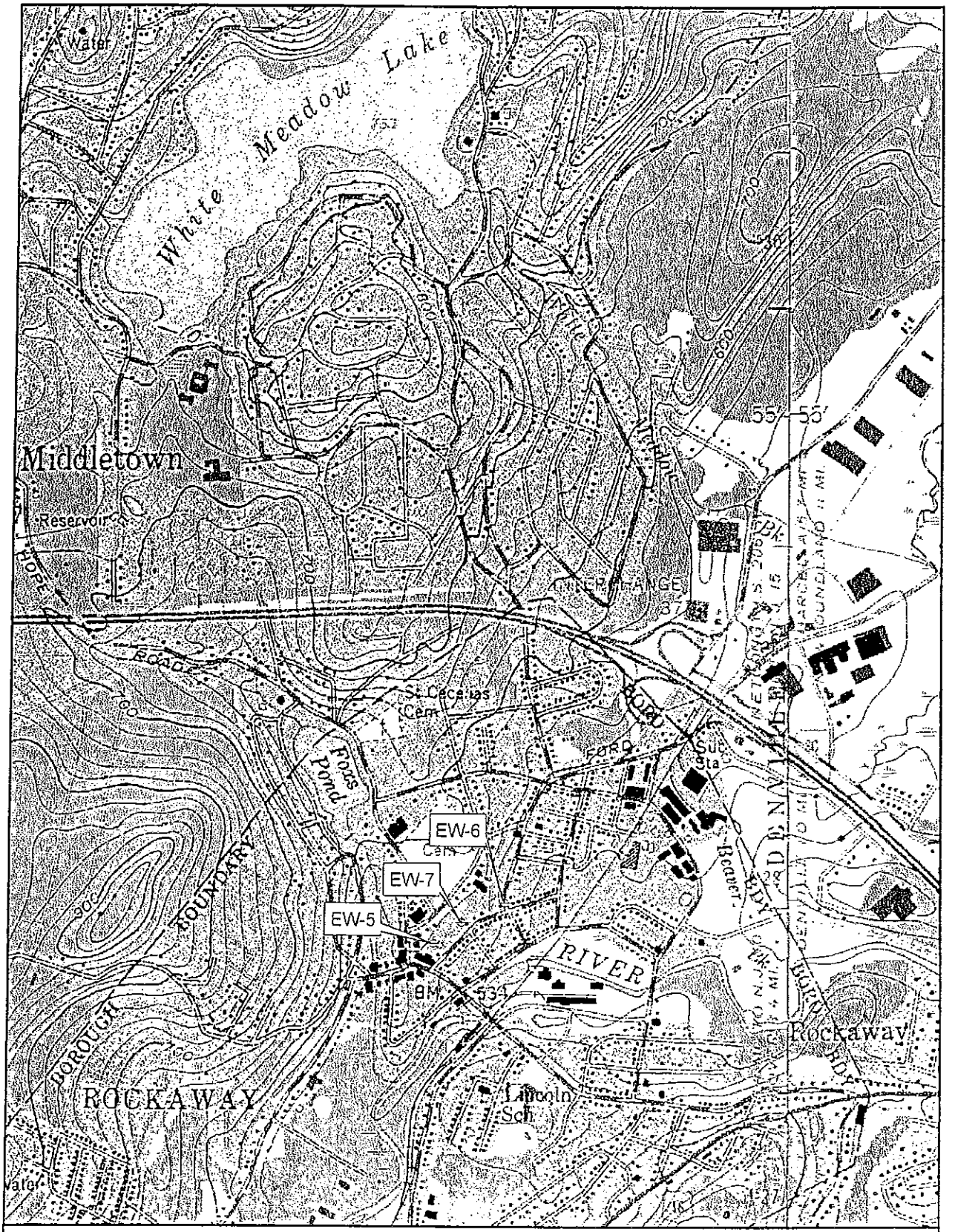

USGS 7.5 Minute Topography Quadrangles maps:
Boonton and Dover, NJ

EW = Extraction Well Location

N

0 250 500 1,000 1,500 2,000 Feet

Extraction Well Locations
East Main/ Wall Street Area
Rockaway Borough, New Jersey

CDM

Date Issued 01-06-2011
Control #
Permit # 11-00006

CONSTRUCTION PERMIT NOTICE

Block 14 Lot 18

Work Site Location: UNION STREET

AUTHORIZED FOR:

- [x] BUILDING
- [x] PLUMBING
- [ ] ELEVATOR DEVICES
- [ ] OTHER
- [x] ELECTRICAL
- [x] FIRE PROTECTION
- [ ] DEMOLITION

Description of Work: NEW PUMP STATION

This notice shall be posted conspicuously at the work site and shall remain so until issuance of a certificate.

U.C.C. F180
(rev. 3/96)

N.J. STATE LAW
13:45A — 16.2

FOR INSPECTION
BUILDING
ELECTRIC
PLUMBING
FIRE PROTECTION
ELEVATOR

FINAL INSPECTIONS ARE REQUIRED BEFORE FINAL PAYMENT IS MADE TO CONTRACTOR

Borough of Rockaway
One East Main Street
Rockaway NJ 07866
(973)627-8035

CONSTRUCTION PERMIT

Date Issued: 01/06/2011
Permit # 11-00006

IDENTIFICATION Block 14 Lot 18 Qualifier

Work Site: UNION ST
ROCKAWAY BORO, NJ 07866

Owner in Fee: ROCKAWAY BOROUGH

Address: UNION ST
ROCKAWAY, NJ 07866

Telephone:

Contractor: Cape Environmental Manage
Address: 180 Gordon Drive
Exton, PA 19341
Telephone: (610) 594-8606

Lic. No. or Bldrs. Reg. No. or Home Reg. No. or Exemption:

Is hereby granted permission to perform the following work:

[X] BUILDING [X] PLUMBING
[X] ELECTRICAL [ ] FIRE PROTECTION [ ] LEAD HAZARD ABATEMENT
[ ] ELEVATOR DEVICES [ ] ASBESTOS ABATEMENT [ ] DEMOLITION

DESCRIPTION OF WORK:
Demolition of existing well house structure. Construction of a new groundwater extraction and treatment system and new well house, in separate rooms. Groundwater treatment includes bag filter, air STRIPPER + VAPOR PHASE GRANULAR ACTIVATED CARBON UNITS.

NOTE: If construction does not commence within one (1) year of date of issuance, or if construction ceases for a period of six (6) months, this permit is void.

Estimated Cost of Work for Selected Subcode(s) $710,738.00

Construction Official

Date 1/6/11

V. FEE SUMMARY (Office Only)

1. Building	$492.90
2. Electrical	$591.00
3. Plumbing	$300.00
4. Fire Protection	$50.00
5. Elevator	$0.00
6. Plan Review	$0.00
7. Subtotal	$1,433.90
8. DCA State Fee	$54.88
9. Subtotal	$1,488.78
10. Certificate	$0.00
11. Subtotal	$1,488.78
12. Exemption (State and Local)	-$1,488.78
TOTAL	$0.00

REQUIRED INSPECTIONS

Construction work must be inspected in accordance with the State Uniform Construction Code Regulation N.J.A.C. 5:23-2.18. This agency will carry out such periodic inspections during the progress of work as are necessary to insure that work installed conforms to the requirements of the Uniform Construction Code.
The owner or other responsible person in charge of work must notify this agency when work is ready for any required inspections specified below. Requests for inspections must be made at least 24 hours prior to the time the inspection is desired. Inspections will be performed within three business days of the time for which they are requested. The work must not proceed in a manner which will preclude the inspection until it has been made and approval given.

☐ Required inspections for all subcodes for one and two family dwellings are the following:
1. The bottom of footing trenches before placement of footings, except that in the case of pile foundations, inspections shall be made in accordance with the requirements of the building subcode.
2. Foundations and all walls up to grade level prior to back filling.
3. Utility services, including septic.
4. All structural framing, connections, wall and roof sheathing and insulation; electrical rough wiring, panel and service installation; rough plumbing. The framing inspection shall take place after the rough electrical and plumbing inspections and after the installation of the heating, ventilation and/or air conditioning duct system. The insulation inspection shall be performed after all other subcode rough inspections and prior to the installation of any interior finish material.

☐ Additional required inspections for all subcodes of construction, for other than one- and two-family dwellings, are fire suppression systems, heat producing devices and Barrier Free subcode accessibility, if applicable.

☐ Required special inspections. The applicant by accepting the permit will be deemed to have consented to these requirements:

☐ A final inspection is required for each applicable subcode area before a final Certificate of Occupancy or Approval may be issued. The final inspections include the installation of all interior and exterior finish materials, sealing of exterior joints, mechanical system and any other required equipment; electrical wiring, devices and fixtures; plumbing pipes, trim and fixtures; tests required by any provisions of the adopted subcodes; Barrier Free accessibility, if applicable; and verification of compliance with NJAC 5.23-3.5, "Posting Structures".

☐ A complete copy of released plans must be kept on the job site.

BUILDING SUBCODE
TECHNICAL SECTION

Date Received Control # 01-06-2011

Date Issued Permit # 11-00006

A. IDENTIFICATION—APPLICANT: COMPLETE ALL APPLICABLE INFORMATION. WHEN CHANGING CONTRACTORS, NOTIFY THIS OFFICE. CALL UTILITY DIG NO: 1-800-272-1000.

Block 14 Lot 18 Qualification Code

Work Site Location 122 JACKSON AVE. ROCKAWAY, NJ

Owner in Fee Borough of Rockaway

Address 1 EAST MAIN STREET, ROCKAWAY, NJ 07865

Tel. (973) 627-2000

Contractor CAPE ENVIRONMENTAL MANAGEMENT, INC

Address 180 GORDON DRIVE, SUITE 105

EXTON, PA 19341

Tel. (610) 594-8606 FAX (610) 594-8609

Contractor License No. or Builder Registration No. 0100814410

Federal Emp. No 58-1639130

JOB SUMMARY (Office Use Only)

PLAN REVIEW	Date	Initial
[ ] No Plans Required		
[✓] All	11/8/10	
[ ] Footing		
[ ] Foundation		
[ ] Frame		
[ ] Other		

Joint Plan Review Required:
[ ] Elec. [ ] Plumb. [ ] Fire [ ] Elevator

SUBCODE APPROVAL
[ ] CO [ ] CCO [ ] CA
Date:
Approved by:

INSPECTIONS Type:	Failure	Dates (Month/Day) Failure	Approval	Initial
Footing				
Footing Bonding				
Foundation				
Slab				
Frame				
Truss Sys./Bracing				
Barrier-Free				
Insulation				
Finishes -Base Layer				
Finishes -Final				
Energy				
Mechanical				
TCO				
Other				
Final				
Barrier-Free				

B. BUILDING CHARACTERISTICS

Use Group Present Proposed F2 FACTORY INDUSTRIAL

Constr. Class Present Proposed IIB

No. of Stories 1

Height of Structure 22 Ft.

Area — Largest Floor 760 Sq. Ft.

New Bldg. Area/All Floors 760 Sq. Ft.

Volume of New Structure 16,430 Cu. Ft.

Total Land Area Disturbed 6,600 Sq. Ft.

Est. Cost of Bldg. Work:
1. New Bldg. $ 507,000
2. Rehabilitation $
3. Total (1+ 2) $

C. CERTIFICATION IN LIEU OF OATH

I hereby certify that I am the (agent of) owner of record and am authorized to make this application.

Paul Ferrone
Signature

D. TECHNICAL SITE DATA

DESCRIPTION OF WORK
Demolition of existing well house structure. Construction of a new groundwater extraction and treatment system and new well house, in separate rooms. Groundwater treatment includes bag filter, air stripper, and vapor phase granular activated carbon (GAC) units. The treated water will be conveyed by gravity to an existing storm drain manhole located near the new building.

TYPE OF WORK:
[X] New Building
[ ] Addition
[ ] Rehabilitation
[X] Roofing
[ ] Siding
[X] Fence _____ Height (exceeds 6')
[ ] Sign _____ Sq. Ft.
[ ] Pool
[ ] Asbestos Abatement Subchapter 8
[ ] Lead Haz. Abatement NJAC 5:17
[X] Other PAVEMENT
[X] Demolition

FEE (Office Use Only)
$

Administrative Surcharge $
Minimum Fee $
State Permit Surcharge Fee $
TOTAL FEE $

1 White = Inspector Copy 2 Canary = Office Copy
3 Tag = Office / Other

U.C.C. F110HB3
(rev. 07/03)

ELECTRICAL SUBCODE
TECHNICAL SECTION

Date Received Control # 01-06-2011

Date Issued Permit # 11-00006

A. IDENTIFICATION—APPLICANT: COMPLETE ALL APPLICABLE INFORMATION. WHEN CHANGING CONTRACTORS, NOTIFY THIS OFFICE. CALL UTILITY DIG NO: 1-800-272-1000.

Block 14 Lot 18 Qualification Code

Work Site Location 122 Jackson Ave, Rockaway, NJ

Owner in Fee: Borough of Rockaway

Tel. (973) 627-2000 e-mail boroughclerk@rockawayborough.org

Address 1 East Main St (street) Rockaway (municipality) 07866 (zip code)

Contractor: Morris Security Group LLC Tel. (973) 598-0998

Address 1572 Sussex Turnpike, Randolph, NJ e-mail kmcardle@morrissecurity.com

Contractor License No. 34AL00002100 Exp. Date 01/31/2010

Home Improvement Contractor Registration No. or Exemption Reason (if applicable):

Federal Emp. ID No. 22 3638305 FAX: (973) 5989897

B. ELECTRICAL CHARACTERISTICS

Use Group Present Proposed

[ ] Pole/Pad # [ ] Temporary [ ] Other

Building Occupied as Utility Co.

Est. Cost of Elec. Work $ 35,738 in combination with Fire Protection

JOB SUMMARY (Office Use Only)

PLAN REVIEW

[X] No Plans Required — Date 11-9-10 Initial

Joint Plan Review Required:

[ ] Building [ ] Plumbing

[ ] Fire [ ] Elevator

[ ] Elec. Plans Approved

Date:

Approved by:

SUBCODE APPROVAL

[ ] CO [ ] CCO [ ] CA

Date:

Approved by:

INSPECTIONS Type:	Dates (Month/Day) Failure	Failure	Approval	Initial
Rough				
Barrier-Free				
Trench				
Temp. Serv.				
Constr. Serv.				
TCO				
Other				
Service				
Final				
Barrier-Free				

Temp. Cut-in-Card Date Issued

Final Cut-in-Card Date Issued

Annual Pool Inspection

Date of Grounding and Bonding Certification

C. CERTIFICATION IN LIEU OF OATH

I hereby certify that I am the (agent of) owner of record and am authorized to make this application and perform the work listed on this application.

Applicant's Signature/Contractor's Seal and Signature

[ ] Licensed Elec. Contractor [ ] Certified Landscape Irrigation Cont'r [ ] Exempt Applicant

D. TECHNICAL SITE DATA

DESCRIPTION OF WORK: Fire / Burglar and Door Access System

QTY.	SIZE	ITEMS	FEE (Office Use Only)
		Lighting Fixtures	
		Receptacles	
		Switches	
		Detectors	
		Light Poles	
		Motors—Fract. HP	
		Emergency & Exit Lights	
		Communications Points	
1		Alarm Devices/F.A.C. Panel	
7		Low Voltage Devices	
15		TOTAL NUMBERS	$
		Pool Permit/with UW Lights	
		Storable Pool/Spa/Hot Tub	
		KW Elec. Range/Receptacle	
		KW Oven/Surface Unit	
		KW Elec. Water Heater	
		KW Elec. Dryer/Receptacle	
		KW Dishwasher	
		HP Garbage Disposal	
		KW Central A/C Unit	
		HP/KW Space Heater/Air Handler	
		KW Baseboard Heat	
		HP Motors 1/+ HP	
		KW Transformer/Generator	
		AMP Service	
		AMP Subpanels	
		AMP Motor Control Center	
		KW Elec. Sign/Outline Light	

Administrative Surcharge $

Minimum Fee $

State Permit Surcharge Fee $

TOTAL FEE $

TO REORDER - ACTION PRINT SOLUTIONS - 800-298-1000

ELECTRICAL SUBCODE
TECHNICAL SECTION

Date Received Control # 01-06-2011

Date Issued Permit # 11-00006

A. IDENTIFICATION—APPLICANT: COMPLETE ALL APPLICABLE INFORMATION. WHEN CHANGING CONTRACTORS, NOTIFY THIS OFFICE. CALL UTILITY DIG NO: 1-800-272-1000.

Block 14 Lot 18 Qualification Code

Work Site Location 122 JACKSON AVE ROCKAWAY NJ

Owner in Fee: Borough of Rockaway.

Tel. (973) 627-2000 e-mail

Address 1 EAST MAIN STREET ROCKAWAY NJ 07866 (street, municipality, zip code)

Contractor: Ehrich Electric Inc Tel. (973) 879-1175

Address 27 Merry Lane, E. Hanover. e-mail

Contractor License No. 10771 Exp. Date 3/12

Home Improvement Contractor Registration No. or Exemption Reason (if applicable):

Federal Emp. ID No. 223172967 FAX: (973) 781-1189

B. ELECTRICAL CHARACTERISTICS

Use Group Present Proposed

[ ] Pole/Pad # [ ] Temporary [ ] Other

Building Occupied as WATER SUPPLY WELL/GWTS Utility Co. JCP&L

Est. Cost of Elec. Work $ 162,000.00

JOB SUMMARY (Office Use Only)

PLAN REVIEW — Date — Initial

[ ] No Plans Required

Joint Plan Review Required:

[ ] Building [ ] Plumbing

[ ] Fire [ ] Elevator

[✓] Elec. Plans Approved

Date: 11-23-10

Approved by:

SUBCODE APPROVAL

[ ] CO [ ] CCO [ ] CA

Date:

Approved by:

INSPECTIONS Type:	Dates (Month/Day) Failure	Failure	Approval	Initial
Rough				
Barrier-Free				
Trench				
Temp. Serv.				
Constr. Serv.				
TCO				
Other				
Service				
Final				
Barrier-Free				

Temp. Cut-in-Card Date Issued

Final Cut-in-Card Date Issued

Annual Pool Inspection

Date of Grounding and Bonding Certification

C. CERTIFICATION IN LIEU OF OATH

I hereby certify that I am the (agent of) owner of record and am authorized to make this application and perform the work listed on this application.

Applicant's Signature/Contractor's Seal and Signature

[✓] Licensed Elec. Contractor [ ] Certif'd Landscape Irrigation Cont'r [ ] Exempt Applicant

D. TECHNICAL SITE DATA

DESCRIPTION OF WORK 600AMP 480VAC Service to supply well Building + treatment, Each to Be metered services, work will include All Require Equipment

QTY	SIZE	ITEMS	FEE (Office Use Only)
14		Lighting Fixtures	
7		Receptacles	
2		Switches	
		Detectors	
		Light Poles	
3		Motors—Fract. HP	
4		Emergency & Exit Lights	
2		Communications Points	
1		Alarm Devices/F.A.C. Panel	
		TOTAL NUMBERS	$
		Pool Permit/with UW Lights	
		Storable Pool/Spa/Hot Tub	
		KW Elec. Range/Receptacle	
		KW Oven/Surface Unit	
		KW Elec. Water Heater	
		KW Elec. Dryer/Receptacle	
		KW Dishwasher	
		HP Garbage Disposal	
		KW Central A/C Unit	
3	5	HP/KW Space Heater/Air Handler	
		KW Baseboard Heat	
7	5	HP Motors 1/+ HP	
2	75/15	KW Transformer/Generator	
1	600	AMP Service	
2	400/200	AMP Subpanels	
1	100	AMP Motor Control Center	
		KW Elec. Sign/Outline Light	

Administrative Surcharge $

Minimum Fee $

State Permit Surcharge Fee $

TOTAL FEE $

TO REORDER - ACTION PRINT SOLUTIONS - 800-298-1000

U.C.C. F120HB3 (rev. 7/06) 1 White = Inspector Copy 2 Canary = Office Copy 3 Tan = Office Copy

PLUMBING SUBCODE
TECHNICAL SECTION

Date Received Control # 01-06-2011

Date Issued Permit # 11-00006

A. IDENTIFICATION—APPLICANT: COMPLETE ALL APPLICABLE INFORMATION. WHEN CHANGING CONTRACTORS, NOTIFY THIS OFFICE. CALL UTILITY DIG NO: 1-800-272-1000.

Block 14 Lot 18 Qualification Code

Work Site Location 122 Jackson Ave, Rockaway NJ 07866

Owner in Fee: Borough of Rockaway

Tel. (973) 627-2000 e-mail

Address 1 First Main St, Rockaway, NJ 07866 (street, municipality, zip code)

Contractor: CAPE Environmental Management Inc. Tel. (610) 594-8606

Address 180 Gordon Drive, Suite 105 Exton PA 19341 e-mail

Contractor License No. 11189 plumber / 0100114410 CAPE Exp. Date

Home Improvement Contractor Registration No. or Exemption Reason (if applicable):

Federal Emp. ID No. 58-1639130 FAX: (610) 594-8600

B. PLUMBING CHARACTERISTICS

Use Group Present Proposed

Building Sewer Size Public Sewer Private Septic

Water Service Size 3/4" Public Water X Private Well

Est. Cost of Plumbing Work $ 6,000

JOB SUMMARY (Office Use Only)

PLAN REVIEW

[ ] No Plans Required

Joint Plan Review Required:

[ ] Building [ ] Electric

[ ] Fire [ ] Elevator

[ ] Plumbing Plans Approved

Date: 11/8/10

Approved by: BHP

SUBCODE APPROVAL

[ ] CO [ ] CCO [ ] CA

Date:

Approved by:

INSPECTIONS Type:	Dates (Month/Day) Failure	Failure	Approval	Initial
Slab				
Rough				
Water				
Sewer				
Fixtures				
Gas Equipment				
Gas Piping				
LPGas Tank				
Fuel Oil Piping				
Solar				
TCO				

C. CERTIFICATION IN LIEU OF OATH

I hereby certify that I am the (agent of) owner of record and am authorized to make this application and perform the work listed on this application.

Applicant's Signature/Contractor's Seal and Signature

[X] Licensed Plumbing Contractor [ ] Exempt Applicant

D. TECHNICAL SITE DATA

DESCRIPTION OF WORK

Construction of a new groundwater extraction and treatment system and new well house, in separate rooms.

QTY.	FIXTURE/EQUIPMENT	FEE (Office Use Only) $
	Water Closet	
	Urinal/Bidet	
	Bath Tub	
	Lavatory	
	Shower	
	Floor Drain	
	Sink	
	Dishwasher	
	Drinking Fountain	
	Washing Machine	
2	Hose Bibb	
	Water Heater	
	Fuel Oil Piping	
	Gas Piping	
	LPGas Tank	
	Steam Boiler	
	Hot Water Boiler	
	Sewer Pump	
	Interceptor/Separator	
2	Backflow Preventer	
	Greasetrap	
	Sewer Connection	
2	Water Service Connection	
	Stacks	
2	Other Storm Sewer Connections	
	Other Extraction Well Main Force Main Piping	

Administrative Surcharge	$
Minimum Fee	$
State Permit Surcharge Fee	$
TOTAL FEE	$

U.C.C. F130 (rev. 10/06)

Reorder From OCS Printing (609) 390-1400

FIRE PROTECTION SUBCODE
TECHNICAL SECTION

Date Received Control # 01-06-2011

Date Issued Permit # 11-00006

A. IDENTIFICATION—APPLICANT: COMPLETE ALL APPLICABLE INFORMATION. WHEN CHANGING CONTRACTORS, NOTIFY THIS OFFICE. CALL UTILITY DIG NO: 1-800-272-1000.

Block 14 Lot 18 Qualification Code

Work Site Location 122 JACKSON AVE, ROCKAWAY.

Owner in Fee: Borough of Rockaway

Tel. (973) 627-2000 e-mail

Address 1 MAIN STREET ROCKAWAY 07866
street municipality zip code

Contractor: Ehrich Electric Inc Tel. (973) 874-1175

Address 27 Merry Lane, E. Hanover NJ e-mail

Fire Protection Equipment, NJ Div of Fire Safety Permit No. # 10771

Fire Protection Equipment, NJ Div of Fire Safety Installer No.

Fire Alarm Contractor No. Exp. Date 3/12

Home Improvement Contractor Registration No. or Exemption Reason (if applicable):

Federal Emp. ID No. 223172967 FAX: (973) 781-1189

B. FIRE PROTECTION CHARACTERISTICS

Use Group: Present ____ Proposed ____

Constr. Class: Present ____ Proposed ____

Heating System: [X] New OR [ ] Existing [ ] HVAC

Type: [ ] Gas [ ] Oil [ ] Electric [ ] Solar

[ ] Other

Location:

Fuel Storage Tank:

Fuel Type: [ ] Flammable OR [ ] Combustible Capacity

Fire Alarm System: [X] New OR [ ] Existing

Location of Panel:

Fire Suppression/Standpipe System:

[ ] New OR [ ] Existing

Location of Main Control Valve:

Total Cost of Fire Protection Work $ 35,738

C. CERTIFICATION IN LIEU OF OATH

I hereby certify that I am the agent or owner of record and am authorized to make this application.

Applicant's Signature/Contractor's Signature

[X] Certified Contractor [ ] Exempt Applicant

D. TECHNICAL SITE DATA

DESCRIPTION OF WORK: Installation of fire alarm panel. Security system to include smoke heat, intrusion, strobes & horn with auto dialer

Water Supply Source N/A

Method of Alarm/Suppression System Supervision

	NUMBER	FEE (Office Use Only)
Flammable/Combustible Tanks		
Alarm Systems		
[ ] System		
[ ] 110v Interconnected		
[ ] CO Detectors/110v		
Alarm Devices (i.e., smoke, heat, pulls, water/flow)	6	
Supervisory Devices (i.e., tampers, low/high air)		
Signaling Devices (i.e., horn/strobes, bells)	2	
Other Devices Intrusion Switch	3	
TOTAL		
Suppression Systems		
Fire Pump ____ GPM Type ____		
Dry Pipe/Alarm Valves		
Pre-action Valves		
Sprinkler Heads (Dry and Wet)		
Standpipes		
Pre-engineered Systems		
Wet Chemical		
Dry Chemical		
CO_2 Suppression		
Foam Suppression		
FM200 Suppression		
Other		
Other Systems		
Kitchen Hood Exhaust System		
Smoke Control System		
Fired Appliances [ ] Gas or [ ] Oil		
Fireplace Venting/Metal Chimney		
Other		

Administrative Surcharge $

Minimum Fee $

State Permit Surcharge Fee $

TOTAL FEE $

JOB SUMMARY (Office Use Only)

PLAN REVIEW

[ ] No Plans Required

Joint Plan Review Required:

[ ] Building [ ] Plumbing

[ ] Electric [ ] Elevator

[X] Fire Plans Approved

Date: 12-23-10

Approved by: Chris

SUBCODE APPROVAL

[ ] CO [ ] CCO [ ] CA

Date:

Approved by:

INSPECTIONS Type:	Failure	Failure	Approval	Initial
	Dates (Month/Day)			
Alarm System				
Suppression Sys.				
Standpipe				
Fire Pump				
Pre-Eng. System				
Mechanical				
Smoke Control				
TCO				
Flam/Combust Tanks				
Fireplace Venting				
Final				
Other				

State of New Jersey
CHRIS CHRISTIE
Governor
KIM GUADAGNO
Lt. Governor
DEPARTMENT of ENVIRONMENTAL PROTECTION
Division of Air Quality
Bureau of Air Permits
401 E. State Street, 2nd floor, P.O. Box 420, Mail Code 401-02
Trenton, NJ 08625-0420
BOB MARTIN
Commissioner

Air Pollution Control
Preconstruction Permit and Certificate to Operate
Construction of a New Source

Permit Activity Number: PCP100001 **Program Interest No: 26502**

Mailing Address	Plant Location
BRIAN QUINN EPA REMEDIAL PROJECT MGR USEPA 290 BROADWAY - 19TH FLR NEW YORK, NY 10007	ROCKAWAY BORO WELLFIELD SUPERFUND SITE 122 Jackson St Rockaway Boro Morris County, New Jersey

Approval Date: 03/16/2011
Expiration Date: 03/15/2016

The New Jersey Department of Environmental Protection (Department) has reviewed the above referenced air pollution control permit application. On the basis of the information provided, the Department concludes that the application satisfies all applicable requirements of the New Jersey Air Pollution Control regulations codified at N.J.A.C. 7:27 et seq. This permit allows for inspection and evaluation of the equipment by the Department to assure conformance with all provisions of N.J.A.C. 7:27 et seq. and any other applicable federal requirements codified at 40 CFR 52, 60, 61 and 63.

The equipment, that is authorized to be installed and operated under this approval, is described in Section A, Source Operations and Section D, Equipment Inventory. Equipment at the facility referenced by this Permit shall be operated in accordance with the Conditions of Approval set forth in Section D, Facility Specific Requirements.

The Department hereby issues this permit and certificate under the authority of chapter 106, P.L. 1967(N.J.S.A 26:2C-9.2). You may construct, reconstruct, install, or modify the above referenced equipment and/or control apparatus consistent with the approval.

The approved Permit is available for download in PDF format which contains the facility's specific requirements (compliance plan) at: http://www.nj.gov/dep/aqpp. After accessing the web site, click on "Approved PCP Permits" listed under "Reports" and then type in your Program Interest (PI) Number, 26502, as instructed on the screen. You will be able to view, print or electronically store your permit. If you have any questions regarding this permit approval, please contact the Department at the Preconstruction Permit Help Line available from

9:00 AM to 4:00 PM daily, where you may speak to someone about any technical questions you may have. The Preconstruction Permit Technical Help Line number is 609-292-6716.

If, in your judgment as an applicant for an air pollution control permit, the Department is imposing any unreasonable Condition of Approval, you may contest the Department's decision and request a contested case hearing pursuant to the Administrative Code at N.J.A.C. 7:27-1.32(a). All requests for contested case hearings must be received in writing by the Department within twenty (20) calendar days of the date you receive this permit approval and must contain the information specified in the Administrative Hearing Request Checklist and Tracking Form.

If you have any non technical questions please use the Bureau's number 609- 292-0834. If you have any questions when filing a General Permit please use the General Permit Help number 609-633-2829.

Approved by:

William Kuehne
Preconstruction Permits

Administrative Hearing Request Checklist and Tracking Form

I. Document Being Appealed

Name of the Facility	Facility ID Number	Permit Activity Number	Issuance Date
ROCKAWAY BORO WELLFIELD SUPERFUND SITE	26502	PCP100001	

II. Contact Information

Name of Person Requesting Hearing	Name of Attorney (if applicable)
Address:	**Address:**
Telephone:	**Telephone:**

III. Please include the following information as part of your request:

A. The date the permittee received the permit decision;
B. Two printed copies of the document being appealed – for submitting to address 1 below;
A PDF copy of the document being appealed on a CD – for submitting to address 2 below
C. The legal and factual questions you are appealing;
D. A statement as to whether or not you raised each legal and factual issues during the permit application process;
E. Suggested revised or alternative permit conditions;
F. An estimate of the time required for the hearing;
G. A request, if necessary, for a barrier-free hearing location for physically disabled persons;
H. A clear indication of any willingness to negotiate a settlement with the Department prior to the Departments processing of your hearing request to the Office of Administrative Law;

Mail this form, completed, signed and dated with all of the information listed above, including attachment, to:

1. New Jersey Department of Environmental Protection
   Office of Legal Affairs
   Attention: Adjudicatory Hearing Requests
   401 E. State Street, P.O. Box 402
   Trenton, New Jersey 08625

2. Air Quality Permitting Element
   Preconstruction Permits
   New Jersey Department of Environmental Protection
   401 E. State Street, 2nd Floor, P.O. Box 027
   Trenton, New Jersey 08625
   Phone: (609) 633-2829

Signature **Date**

Administrative Hearing Request Checklist and Tracking Form

IV. If you are not the applicant but rather an interested person claiming to be aggrieved by the permit decision, please include the following information:

1. The date you or your agent received notice of the permit decision (include a copy of that permit decision with your hearing request);
2. Evidence that a copy of the request has been delivered to the applicant for the permit which is the subject of the permit decision;
3. A detailed statement of which findings of fact and/or conclusion of law you are challenging;
4. A description of your participation in any public hearings held in connection with the permit application and copies of any written comments you submitted;
5. Whether you claim a statutory or constitutional right to a hearing, and, if you claim such a right, a reference to the applicable statute or explanation of how your property interests are affected by the permit decision;
6. If the appeal request concerns a CAFRA permit decision, evidence that a copy of the request has been delivered to the clerks of the county and the municipality in which the project which is the subject of the permit decision is located;
7. Suggested revised or alternative permit conditions;
8. An estimate of the time required for the hearing;
9. A request, if necessary, for a barrier-free hearing location for physically disable persons;
10. A clear indication of any willingness to negotiate a settlement with the Department prior to the Department's transmittal of the hearing request to the Office of Administrative Law;

Mail this form, completed, signed and dated with all of the information listed above, including attachment, to:

New Jersey Department of Environmental Protection
Office of Legal Affairs
Attention: Adjudicatory Hearing Requests
401 East State Street, P.O. Box 402
Trenton, New Jersey 08625-0402

Air Quality Permitting Element
Preconstruction Permits
New Jersey Department of Environmental Protection
401 E. State Street, 2nd Floor, P.O. Box 027
Trenton, New Jersey 08625
Phone: (609) 633-2829

_____ _____

Signature **Date**

AIR POLLUTION CONTROL PRECONSTRUCTION PERMIT

Table of Contents

Facility Name: ROCKAWAY BORO WELLFIELD SUPERFUND SITE
Facility ID No.: 26502
Permit Activity No.: PCP100001

Section A

AUTHORIZED SOURCE OPERATIONS

Section B

ACRONYMS

Section C

GENERAL PROVISIONS AND AUTHORITIES

Section D

PERMIT INFORMATION

AIR POLLUTION CONTROL PRECONSTRUCTION PERMIT

Section A

Facility Name: ROCKAWAY BORO WELLFIELD SUPERFUND SITE
Facility ID No.: 26502
Permit Activity No.: PCP100001

AUTHORIZED SOURCE OPERATIONS

This Preconstruction Permit and the Certificate to Operate for the following equipment is issued pursuant to N.J.A.C. 7:27-8.

Description of Source Activity

Source Operation Type: Groundwater Extraction & Treatment at Rockaway Borough Wellfield.

Source Operation Description: Process involves a Carbonair STAT Low Profile air stripper along with granular activated carbon adsorption units.

Source Operation Details: The sources authorized by this permit shall be operated within the parameters specified in the Equipment, Control Device, and/or Emission Unit/Batch Process Operating Scenario Details of this permit. Operation of the authorized sources within these parameters is required in addition to compliance with the conditions specified in Section D – Facility Specific Requirements.

AIR POLLUTION CONTROL PRECONSTRUCTION PERMIT

Section B

Facility Name: ROCKAWAY BORO WELLFIELD SUPERFUND SITE
Facility ID No.: 26502
Permit Activity No.: PCP100001

ACRONYMS

BTS	Bureau of Technical Services
CEMS	Continuous Emissions Monitor System
CFR	Code of Federal Regulations
CO	Carbon Monoxide
COMS	Continuous Opacity Monitor System
EPA	United States Environmental Protection Agency
HAP	Hazardous Air Pollutant
N.J.A.C.	New Jersey Administrative Code
NJDEP	New Jersey Department of Environmental Protection
NOx	Oxides of Nitrogen
PM-2.5	All particulate matter having an aerodynamic diameter less than or equal to a nominal 2.5 microns
PM-10	All particulate matter having an aerodynamic diameter less than or equal to a nominal 10 microns
PST	Performance Specification Test
REO	Regional Enforcement Office - NJDEP
SO_2	Sulfur Dioxide
TSP	Total Suspended Particulate Matter
VOC	Volatile Organic Compounds

AIR POLLUTION CONTROL PRECONSTRUCTION PERMIT

Section C

Facility Name: ROCKAWAY BORO WELLFIELD SUPERFUND SITE
Facility ID No.: 26502
Permit Activity No.: PCP100001

GENERAL PROVISIONS AND AUTHORITIES
Preconstruction Permits

1. Not withstanding compliance with other provisions of N.J.A.C. 7:27-1 et seq., no person shall cause, suffer, allow or permit to be emitted into the outdoor atmosphere substances in quantities which shall result in air pollution as defined at N.J.A.C. 7:27-5.1. [N.J.A.C. 7:27-5.2(a)]

2. The permittee shall not construct, reconstruct, install, or modify a significant source or control apparatus serving the significant source without first obtaining a preconstruction permit under N.J.A.C. 7:27-8. [N.J.A.C. 7:27-8.3(a)]

3. The permittee shall not operate (nor cause to be operated) a significant source or control apparatus serving the significant source without a valid operating certificate. [N.J.A.C. 7:27-8.3(b)]

4. Permit Revisions:

   The permittee shall not take any action which requires a permit revision, compliance plan change, seven-day-notice change, amendment, or change to a batch plant permit, under any applicable provision at N.J.A.C. 7:27-8.17 through 8.23, without complying with that applicable provision.

   The following summarize N.J.A.C. 7:27-8.18 through 8.21:

   a. The permittee shall file a permit revision request and receive approval from the Department prior to increasing any maximum allowable emission limit, increasing actual emissions, to a rate or concentration greater than a maximum allowable emission, causing the emissions of a new air contaminant, use a new raw material, reconstructing equipment, change the ground level concentration of an air contaminant in an area where the public has access, replace the permitted source, or constructing or installing a new significant source. [N.J.A.C. 7:27-8.18]

   b. The permittee shall file a compliance plan change request and receive approval from the Department prior to decreasing the frequency of testing, monitoring, recordkeeping, or reporting, changing the monitoring method, changing a level, rate, or limit of an operational parameter included in the conditions, or reducing a source's potential to emit. [N.J.A.C. 7:27-8.19]

   c. At least seven days prior to proceeding with a physical or operational change that is outside the scope of activities allowed by this permit, but will not increase emissions over the allowable emissions and will not alter the stack characteristics, the permittee shall file a seven-day-notice change. The permittee

may proceed with the proposed changes seven days after such notice is filed with the Department. [N.J.A.C. 7:27-8.20]

d. The permittee shall file an amendment within 120 days of making any change of the information contained within Section C of this permit (Facility Profile), changing the name, number or designation of any equipment or stack covered by this permit, changing the parameters of a stack in such a way to reduce the ground level concentration of an air contaminant, or correction of a typographical error that will not result in an increase of actual or allowable emissions. [N.J.A.C. 7:27-8.21]

The permittee shall review the provisions of N.J.A.C. 7:27-8.18 through 7:27-8.21 to determine the appropriate type of request to file.

5. The permittee shall make the preconstruction permit or certificate, together with any amendments, seven-day-notices, or other documents related to the permit and certificate, readily available for Department inspection on the operating premises. [N.J.A.C. 7:27-8.3(d)]

6. The permittee shall not use or cause to be used the equipment or control apparatus unless all components connected or attached to, or serving, the equipment or control apparatus, are functioning properly and are in compliance with the preconstruction permit and certificate and all conditions and provisions thereto. [N.J.A.C. 7:27-8.3(e)]

7. A preconstruction permit is not transferable either from the location authorized in the preconstruction permit to another location, or from any one piece of control apparatus or equipment to another piece of control apparatus or equipment. [N.J.A.C. 7:27-8.3(f)]

8. Once a permit or certificate is issued, the permittee is fully responsible for compliance with N.J.A.C. 8:27-8 and with the permit and certificate, including adequate design, construction, and operation of the source, even if employees, contractors, or others work on or operate the permitted source. If the Department issues any other requirement with the force of law, such as an order, which applies to the source, the permittee is also responsible for compliance with that requirement. [N.J.A.C. 7:27-8.3(g)]

9. Preconstruction permits and certificates do not any way relieve the permittee from the obligation to obtain necessary permits from other government agencies and to comply with all other applicable Federal, State, and local rules and regulations. [N.J.A.C. 7:27-8.3(h)]

10. The permittee shall not suffer, allow, or permit any air contaminant detectable by the sense of smell, to be present in the outdoor atmosphere in such quantity and duration which is, or tends to be, injurious to human health or welfare, animal or plant life or property, or would unreasonably interfere with the enjoyment of life or property. This shall not include an air contaminant which occurs only in areas over which the permittee has exclusive use or occupancy. In determining whether an odor unreasonably interferes with the enjoyment of life or property, the Department shall consider all of the relevant facts and circumstances, including, but not limited to, the character, severity, frequency, and duration of the odor, and the number of persons affected thereby. In considering these and other relevant facts and circumstances, no one factor shall be dispositive, but each shall be considered relevant in determining whether an odor interferes with the enjoyment of life or property, and, if so, whether such interference is unreasonable considering all of the circumstances. [N.J.A.C.7:27-8.3(j)]

11. The Department and its representatives have the right to enter and inspect any facility or property in accordance with N.J.A.C. 7:27-1.31. [N.J.A.C. 7:27-8.3(m)]

12. There shall be an affirmative defense to liability for penalties for a violation of a preconstruction permit or certificate occurring as a result of an equipment malfunction, an equipment start-up, an equipment shutdown, or during the performance of necessary maintenance. The affirmative defense shall be asserted and established as required pursuant to P.L. 1993. c.89 (adding N.J.S.A. 26:2C-19.1 through 2C-19.5) and any rules the Department promulgates thereunder, and shall meet all of the requirements thereof. There shall also be an affirmative defense to liabilities for penalties or other sanctions for noncompliance with any technology based emission limitation in this permit or certificate, if the noncompliance was due to an emergency as defined at N.J.A.C. 7:27-22.1, provided that the affirmative defense is asserted and established in compliance with 40 CFR 70.6(g) and meets all requirements thereof. [N.J.A.C. 7:27-8.3(n)]

13. The permittee shall not cause or use the equipment specified in a preconstruction permit in a manner that will result in the emission of any air contaminant not listed in the Facility Specific Requirements in this Preconstruction Permit at a rate equal to or higher than the applicable reporting threshold set forth at N.J.A.C. 7:27-8 Appendix I, Table A or B. [N.J.A.C. 7:27-8.4(k)1]

14. No air contaminant, or category of air contaminant, where accepted by the Department, shall be emitted other than those approved in the preconstruction permit. [N.J.A.C. 7:27-8.13(a)]

15. Any person to whom the Department has issued a preconstruction permit or certificate shall comply with all terms and conditions of any order related to the preconstruction permit or certificate. [N.J.A.C. 7:27-8.13(a)]

16. The permittee shall maintain all records required in the preconstruction permit for a period of five (5) calendar years from the calendar year within which the record was generated. [N.J.A.C. 7:27-8.13(a)]

17. The Department may change the conditions of approval of any approved certificate to operate at the time of renewal of a temporary operating certificate; at the time of approval or renewal of a five-year operating certificate; or at any time during the period a certificate is in effect, if the Department determines that such change is necessary to protect human health or welfare or the environment. [N.J.A.C. 7:27-8.13(b)]

18. Upon request of the Department, the permittee shall submit to the Department information relevant to the operation of equipment and control apparatus including all information specified at N.J.A.C. 7:27-8.13(c). [N.J.A.C. 7:27-8.13(c)]

19. If the conditions of a preconstruction permit or certificate to operate require the Department to incur any of the following charges, the permittee shall reimburse the Department for the full amount of these charges: (1) The charges billed by any phone company for the maintenance of a dedicated telephone line required by this permit or the certificate to operate for the electronic transmission of data; or (2) The charges billed by any laboratory for performing the analysis of audit samples collected pursuant to testing or monitoring required by this permit or the certificate to operate. [N.J.A.C. 7:27-8.13(g)]

20. Any exceedance of the operating requirements or emission concentrations specified in a preconstruction permit shall be reported within three (3) business days, by writing to the Regional Enforcement Office. [N.J.A.C. 7:27-8.13(h)]

21. The permittee shall, when requested by the Department, provide such testing facilities exclusive of instrumentation and sensing devices as may be necessary for the Department to determine the kind and amount of air contaminants emitted from the equipment or control apparatus. The testing facilities shall include the utilities, the structure to hold testing equipment and/or personnel, and any ports in stacks needed to carry out testing required by this permit. During testing by the Department, the equipment and control apparatus shall be operated under such conditions within their capacities as may be requested by the Department. The test facilities may be either permanent or temporary, at the discretion of the person responsible for their provision, and shall conform to all applicable laws, regulations, and rules concerning safe construction and safe practice. Testing facilities, which contain platforms and other means of personnel access, shall conform to OSHA standards. [N.J.A.C. 7:27-8.13(i)]

22. Upon request of the Department, the permittee shall submit to the Department any record relevant to any permit or certificate. Such records shall be submitted to the Department within thirty (30) days of the request by the Department or within a longer time period if approved in writing by the Department. [N.J.A.C. 7:27-8.15(a)]

23. The permittee shall submit any required report in a format and on a schedule approved by the Department. Such report shall be transmitted on paper, on computer disk, or electronically, at the discretion of the Department. [N.J.A.C. 7:27-8.15(b)]

24. Any report submitted to the Department, including but not limited to, a report submitted as an amendment of this permit or the certificate to operate pursuant to N.J.A.C. 7:27-8.3(c) shall include, as an integral part of the report, certifications complying with N.J.A.C. 7:27-1.39. [N.J.A.C. 7:27-8.15(c)]

25. Upon request of the Department, the permittee shall report on forms obtained from the Department the air contaminant actual emissions and information relevant thereto, of any air contaminant or category of air contaminant emitted by the equipment, control apparatus, or source operation. [N.J.A.C. 7:27-8.15(d)]

26. Any emission limit values in a preconstruction permit shall be interpreted to be followed by inherent trailing zeros (0) in the decimal portion of the limit to three significant figures (e.g. a printed limit of “1 lb/hr” means a limit of “1.00 lb/hr”).

27. This listing of requirements reflects the state rules and regulations that apply to a majority of sources. If a specific requirement in a rule or regulation that applies to a permittee is not included in this section or in the Facility Specific Requirements it does not relieve the permittee from the obligation to comply with that regulation.

28. Process monitors must be operated at all times when the associated process equipment is operating except during outage time allowed by Department guidelines/procedures or as outlined in Technical Manual 1005. The Permittee must keep a service log as required.

29. The following Department offices may be referenced in a preconstruction permit. Please use the following addresses when submitting any correspondence to these offices:

Bureau of Technical Services
P. O. Box 437
380 Scotch Road
West Trenton, NJ 08625

Central Regional Enforcement Office
P. O. Box 407
Trenton, NJ 08625-0407

Northern Regional Enforcement Office
7 Ridgedale Avenue
Cedar Knolls, NJ 07927

Southern Regional Enforcement Office
2 Riverside Drive – Suite 201
Camden, NJ 08102

30. In accordance with the Air Pollution Control Act at N.J.S.A. 26:2C-19(e), any operation of the equipment which may cause off-property effect, including odors, shall be immediately reported by calling the NJDEP Environmental Action Hotline at (877) 927-6337.

31. In accordance with N.J.A.C. 7:27-21, facilities are required to submit annual emission statements of their actual emissions if the Potential-to-emit for the entire facility exceeds the following thresholds (including all emissions from the facility, both permitted and unpermitted). Additional information about Emission Statement reports can be obtained by calling (609) 984-5483.

AIR CONTAMINANT	**Threshold in Tons per Year**
VOC (Volatile Organic Compounds	10
NOx (Oxides of Nitrogen)	25
CO (Carbon Monoxide)	100
SO_2 (Sulfur Dioxide)	100
TSP (Total Suspended Particulates)	100
$PM_{2.5}$ (Particulate Matter $\leq$ 2.5 microns)	100
PM_{10} (Particulate Matter $\leq$ 10 microns)	100
NH_3 (Ammonia)	100
Lead	5

32. In accordance with N.J.A.C. 7:27-22, facilities are required to submit a Title V Operating Permit application, within one year, if the potential-to-emit for the entire facility exceeds any of the following thresholds (including all emissions from the facility, both permitted and unpermitted). Additional Information about Operating Permits can be obtained by calling the Operating Permit Hotline at (609) 633-8248.

AIR CONTAMINANT	**Threshold in Tons per Year**
VOC (Volatile Organic Compounds)	25
NOx (Oxides of Nitrogen)	25
CO (Carbon Monoxide)	100
SO_2 (Sulfur Dioxide)	100
TSP (Total Suspended Particulates)	100
PM_{10} (Particulate Matter $\leq$ 10 microns)	100
Lead	10
Any HAP (Hazardous Air Pollutant)	10
All HAPs Collectively	25
Any other Air Contaminant	100

AIR POLLUTION CONTROL PRECONSTRUCTION PERMIT

Section D

Facility Name: ROCKAWAY BORO WELLFIELD SUPERFUND SITE
Facility ID No.: 26502
Permit Activity No.: PCP100001

PERMIT INFORMATION

FACILITY SPECIFIC REQUIREMENTS INDEX

FACILITY SPECIFIC REQUIREMENTS

REASON FOR APPLICATION

FACILITY PROFILE (GENERAL)

EQUIPMENT INVENTORY

CONTROL DEVICE INVENTORY

EMISSION POINT INVENTORY

EMISSION UNIT/BATCH PROCESS INVENTORY

AIR POLLUTION CONTROL PRECONSTRUCTION PERMIT

Section D

Facility Name: ROCKAWAY BORO WELLFIELD SUPERFUND SITE
Facility ID No.: 26502
Permit Activity No.: PCP100001

FACILITY SPECIFIC REQUIREMENTS INDEX

Subject Item and Name **Page Number**

U1 OS Summary Air Stripper w/ GAC control 1
U1 OS1 2

New Jersey Department of Environmental Protection
Facility Specific Requirements

Emission Unit: **U1 Air Stripper and GAC control associated with groundwater remediation clean up**

Operating Scenario: **OS Summary**

Ref.#	Applicable Requirement	Monitoring Requirement	Recordkeeping Requirement	Submittal/Action Requirement
1	VOC (Total) <= 0.12 tons/yr. [N.J.A.C. 7:27- 8.13(h)]	None.	None.	None.
2	Total HAPs <= 0.12 tons/yr. [N.J.A.C. 7:27-8.13(h)]	None.	None.	None.
3	Tetrachloroethylene <= 0.12 tons/yr. [N.J.A.C. 7:27- 8.13(h)]	None.	None.	None.
4	Emissions of all other air contaminant, not listed in this permit, shall be below their reporting thresholds for contaminants listed at N.J.A.C. 7:27-8 Appendix I or below 0.05 lb/hr for all other air contaminants. [N.J.A.C. 7:27- 8.13(a)]	None.	None.	None.
5	All emissions shall pass through the activated carbon units, CD1 & CD2. There shall be no fugitive emissions. [N.J.A.C. 7:27- 8.13(d)2i]	None.	None.	None.
6	Flowrate <= 210 gal/min. [N.J.A.C. 7:27-8.13(a)]	Flowrate: Monitored by material feed/flow monitoring continuously, based on 1 minute intervals. The permittee shall monitor using a continuous flow meter. The permittee shall install, calibrate and maintain the monitor(s) in accordance with the manufacturer's specifications. The monitor(s) shall be ranged such that the allowable value is approximately mid-scale of the full range current/voltage output. [N.J.A.C. 7:27- 8.13(d)1]	Flowrate: Recordkeeping by strip chart, round chart or data acquisition (DAS) system / electronic data storage continuously. [N.J.A.C. 7:27- 8.13(d)3]	None.
7	Maximum No. of Billable Compliance Inspections <= 2 inspections over the life of the Operating Certificate. The permittee will be invoiced for a service fee per inspection pursuant to N.J.A.C. 7:27-8.6 after the periodic compliance inspection is conducted. [N.J.A.C. 7:27- 8.13(e)]	None.	None.	None.

New Jersey Department of Environmental Protection
Facility Specific Requirements

Emission Unit: **U1 Air Stripper and GAC control associated with groundwater remediation clean up**

Operating Scenario: **OS1 Airstripper with 2 GAC in series control**

Ref.#	Applicable Requirement	Monitoring Requirement	Recordkeeping Requirement	Submittal/Action Requirement
1	VOC (Total) <= 0.03 lb/hr. [N.J.A.C. 7:27-8.13(h)]	VOC (Total): Monitored by periodic emission monitoring daily, based on an instantaneous determination , using a PID. The portable emission monitoring instrument shall be calibrated according to manufacturer's specification. [N.J.A.C. 7:27-8.13(d)3]	VOC (Total): Recordkeeping by manual logging of parameter or storing data in a computer data system daily. Calibration records shall also be maintained and made available to representatives of the Department upon request. [N.J.A.C. 7:27-8.13(d)3]	None.
2	HAPs <= 0.03 lb/hr. [N.J.A.C. 7:27-8.13(h)]	HAPs: Monitored by periodic emission monitoring daily, based on an instantaneous determination , using a PID to determine total VOC is less than 0.03 lbs per hour. The portable emission monitoring instrument shall be calibrated according to manufacturer's specification. [N.J.A.C. 7:27-8.13(d)3]	HAPs: Recordkeeping by manual logging of parameter or storing data in a computer data system daily. Calibration records shall also be maintained and made available to representatives of the Department upon request. [N.J.A.C. 7:27- 8.13(d)3]	None.
3	Tetrachloroethylene <= 0.03 lb/hr. [N.J.A.C. 7:27- 8.13(h)]	Tetrachloroethylene: Monitored by periodic emission monitoring daily, based on an instantaneous determination , using a PID to determine total VOC is less than 0.03 lbs per hour. The portable emission monitoring instrument shall be calibrated according to manufacturer's specification. [N.J.A.C. 7:27-8.13(d)3]	Tetrachloroethylene: Recordkeeping by manual logging of parameter or storing data in a computer data system daily. Calibration records shall also be maintained and made available to representatives of the Department upon request. [N.J.A.C. 7:27-8.13(d)3]	None.

New Jersey Department of Environmental Protection
Facility Specific Requirements

Ref.#	Applicable Requirement	Monitoring Requirement	Recordkeeping Requirement	Submittal/Action Requirement
4	Operating VOC Control Efficiency >= 95 %. At all times while operating, the permittee shall meet either the specified VOC stack exhaust gas concentration or the specified control device operating VOC control efficiency. [N.J.A.C. 7:27- 8.13(a)]	Operating VOC Control Efficiency: Monitored by periodic emission monitoring at the approved frequency by PID or canister sampling. VOCs shall be monitored prior to the carbon unit and at the stack while operating under typical conditions. If the typical conditions are a range, the monitoring data shall be taken at worst case (max emissions) conditions. The frequency of monitoring shall be as follows: Week (1) - Once per day, days 1, 2 and one additional day during the week. Week (2-7) - Once per week. Weeks (8-Completion) - Monthly. [N.J.A.C. 7:27- 8.13(d)1]	Operating VOC Control Efficiency: Recordkeeping by manual logging of parameter upon occurrence of event. All monitoring and sampling results shall be kept in table form with the following headings where applicable: Date, Standard Cubic Feet Per Minute, Monitor Reading, Response Factor, % Oxygen (before and after control), VOC Parts Per Million (before and after control), VOC Pounds Per Hour (before and after control), VOC Control Efficiency and Permit Limit VOC Control Efficiency. All monitoring and sampling records shall be kept on-site for a minimum of 5 years and made available to representatives of the Department upon request. [N.J.A.C. 7:27- 8.13(d)3]	None.
5	VOC (Total): Breakthrough shall be defined as when the unit's effluent concentrations are within 90 percent of the unit's influent concentrations, the first (lead) GAC unit's carbon change-out will be performed. [N.J.A.C. 7:27- 8.13(h)1]	VOC (Total): Monitored by periodic emission monitoring each week during operation, based on an instantaneous determination. PID readings will be performed from the unit's influent and effluent sample ports. Once the lead unit's effluent concentrations are within 90 percent of the unit's influent concentration, based on the PID readings, confirmatory influent and effluent TO-15 samples will be collected from the unit. [N.J.A.C. 7:27- 8.13(d)1]	VOC (Total): Recordkeeping by manual logging of parameter upon occurrence of event. All monitoring and sampling results shall be kept in table form with the following headings where applicable: Date, Standard Cubic Feet Per Minute, Monitor Reading, Response Factor, % Oxygen, VOC Parts Per Million, VOC Pounds Per Hour, and VOC Permit Limit Pounds Per Hour. All monitoring and sampling records shall be kept on-site for a minimum of 5 years and made available to representatives of the Department upon request. [N.J.A.C. 7:27- 8.13(d)3]	None.
6	When breakthrough occurs all of the spent carbon shall be replaced with fresh carbon (virgin or regenerated). For carbon change-out, carbon in the lead unit will be replaced with fresh carbon (virgin or regenerated). The second (lag) unit will be put into the first (lead) position and the vessel with the fresh carbon will be placed as the second (lag) unit. [N.J.A.C. 7:27- 8.13(a)]	None.	Recordkeeping by manual logging of parameter or storing data in a computer data system upon occurrence of event. Records of the date and time when the carbon unit is changed or regenerated and the breakthrough concentration shall be kept on-site for a minimum of 5 years after collection and shall be made available to representatives of the Department upon request. [N.J.A.C. 7:27- 8.13(d)3]	None.

New Jersey Department of Environmental Protection
Facility Specific Requirements

Ref.#	Applicable Requirement	Monitoring Requirement	Recordkeeping Requirement	Submittal/Action Requirement
7	The permittee shall maintain records of carbon unit operations. [N.J.A.C. 7:27-16.16(g)3ii]	None.	Recordkeeping by manual logging of parameter at the approved frequency. The permittee shall record the date and time the carbon used in the control apparatus is regenerated or replaced; also maintain production records sufficient to demonstrate whether the processes conducted generate VOC emissions within the design parameters of the control apparatus and any other information required to document whether the control apparatus is being used and maintained in accordance with the manufacturer's recommended procedures. Such manufacturer's recommended procedures shall readily available on the operating premises, and the person responsible for the source operation shall provide these to the Department upon request. [N.J.A.C. 7:27-16.16(g)3ii]	None.

ROCKAWAY BORO WELLFIELD SUPERFUND SITE (26502)
PCP100001

Date: 3/16/2011

New Jersey Department of Environmental Protection
Reason for Application

Permit Being Modified

Permit Class: **Number:** 0

Description of Modifications: The Rockaway Borough Wellfield Superfund Site groundwater plume in Rockaway Borough (Borough), Morris County, New Jersey, covers a 2-square mile area and includes three municipal water supply wells, which are located in a glacial aquifer designated by the United States Environmental Protection Agency (EPA) as the sole source aquifer for the Borough and the surrounding communities.

As part of the remediation project associated with this Site, contaminated groundwater will be treated using an air stripper to remove VOCs prior to discharge into the storm sewer. The exhaust from the air stipper unit will be treated using two GAC units in series.

This application is for the installation of this new equipment on the Superfund Site and serves as the permit equivalent needed as part of the requirements for remedial operation at a Superfund facility.

ROCKAWAY BORO WELLFIELD SUPERFUND SITE (26502)
PCP100001

Date: 3/16/2011

New Jersey Department of Environmental Protection
Facility Profile (General)

Facility Name (AIMS): Rockaway Borough Wellfield Superfund Site **Facility ID (AIMS):** 26502

Street Address: 122 JACKSON ST
ROCKAWAY, NJ 07866

Mailing Address: 122 JACKSON ST
ROCKAWAY, NJ 07866

State Plane Coordinates:

X-Coordinate:	489,930
Y-Coordinate:	753,720
Units:	New Jersey State Plane 8
Datum:	NAD27
Source Org.:	Other/Unknown
Source Type:	Other/Unknown

County: Morris

Location Description: Block 14, Lot 18 IN Rockaway, NJ at the INTERSECTION OF JACKSON ST AND OGDEN

Industry:

Primary SIC:

Secondary SIC:

NAICS:

New Jersey Department of Environmental Protection
Facility Profile (General)

Contact Type: **Responsible Official**

Organization: US EPA

Org. Type: Federal

Name: Brian Quinn

NJ EIN:

Title: EPA Remedial Project Manager

Phone: (212) 637-4381 x

Mailing Address: 290 Broadway
New York, NY 10007

Fax: ( ) - x

Other: ( ) - x

Type:

Email: quinn.brian@epamail.epa.gov

ROCKAWAY BORO WELLFIELD SUPERFUND SITE (26502) Date: 3/16/2011

PCP100001

New Jersey Department of Environmental Protection
Equipment Inventory

Equip. NJID	Facility's Designation	Equipment Description	Equipment Type	Certificate Number	Install Date	Grand-Fathered	Last Mod. (Since 1968)	Equip. Set ID
E1	AST-400	Air Stripper unit	Air Stripper	PCP100001	5/1/2011	No	5/1/2011	

ROCKAWAY BORO WELLFIELD SUPERFUND SITE (26502) Date: 3/16/2011

PCP100001

New Jersey Department of Environmental Protection
Control Device Inventory

CD NJID	Facility's Designation	Description	CD Type	Install Date	Grand-Fathered	Last Mod. (Since 1968)	CD Set ID
CD1	GAC-401	Carbon Adsorbtion Unit	Adsorber	5/1/2011	No		
CD2	GAC-402	Carbon Adsorbtion Unit	Adsorber	5/1/2011	No		

ROCKAWAY BORO WELLFIELD SUPERFUND SITE (26502)
PCP100001

Date: 3/16/2011

New Jersey Department of Environmental Protection
Emission Points Inventory

PT NJID	Facility's Designation	Description	Config.	Equiv. Diam. (in.)	Height (ft.)	Dist. to Prop. Line (ft)	Exhaust Temp. (deg. F)			Exhaust Vol. (acfm)			Discharge Direction	PT Set ID
							Avg.	Min.	Max.	Avg.	Min.	Max.		
PT1	GAC Stack3	GAC Stack	Round	12	24	23	65.0	55.0	75.0	2,100.0	2,100.0	2,100.0	Horizontal	

ROCKAWAY BORO WELLFIELD SUPERFUND SITE (26502)
PCP100001

Date: 3/16/2011

New Jersey Department of Environmental Protection
Emission Unit/Batch Process Inventory

U 1 AirStrip/GAC Air Stripper and GAC control associated with groundwater remediation clean up

UOS NJID	Facility's Designation	UOS Description	Operation Type	Signif. Equip.	Control Device(s)	Emission Point(s)	SCC(s)	Annual Oper. Hours Min.	Annual Oper. Hours Max.	VOC Range	Flow (acfm) Min.	Flow (acfm) Max.	Temp. (deg F) Min.	Temp. (deg F) Max.
OS1	2GAC	Airstripper with 2 GAC in series control	Normal - Steady State	E1	CD1 (P) CD2 (S)	PT1		7,884.0	8,760.0		2,100.0	2,100.0	55.0	75.0

RELEVANT STATUTES

Permit effluent limitations, monitoring requirements, and other conditions are authorized by the Federal Water Pollution Control Act, 33 U.S.C. 1251 et seq., also known as the Clean Water Act, and the State Water Pollution Control Act, N.J.S.A. 58:10A-1 et seq. These statutes are implemented by the National Pollutant Discharge Elimination System (NPDES), 40 CFR Part 122, and the New Jersey Pollutant Discharge Elimination System (NJPDES), N.J.A.C. 7:14A-1 et seq., permit programs. On page 1,736 of the New Jersey Register, in the response to comments for the May 5, 1997 NJPDES Regulations at N.J.A.C. 7:14A-1 et seq., it is stated that discharges from CERCLA remediation projects are exempted from a NJPDES permit.

BACKGROUND

The Rockaway Borough Wellfield Superfund Site groundwater plume in Rockaway Borough (Borough), Morris County, New Jersey covers a 2-square mile area and includes three municipal water supply wells, which are located in a glacial aquifer designated by the United States Environmental Protection Agency (USEPA) as the sole source aquifer for the Borough and the surrounding communities. In 1980, several volatile organic compounds were detected in municipal wells. In September 1983 following the completion of the initial investigations the Site was listed as a Comprehensive Environmental Response, Compensation and Liability Act (CERCLA) Site.

On October 11, 2007, a NJPDES Discharge to Surface Water (DSW) permit equivalent was issued for this project for the installation and aquifer testing of three extraction wells, EW-5, EW-6 and EW-7. Groundwater extracted during the pump tests was treated by a portable treatment system and discharged to Rockaway River, classified as FW2-NT waters, via a storm sewer. However, more recent remedial design investigation work performed from January through June 2009 determined that the three existing extraction wells are located to the north of the central portion of the contaminant plume and are insufficient for satisfying the remedial goals. Based on these findings, the extraction wells will be realigned to the south to increase the mass of contaminant removal and the efficiency of the remedial system.

The re-aligned system as proposed includes the construction of four new extraction wells, EW-5A, EW-8, EW-9 and EW-10. The new facility will treat groundwater impacted by the Rockaway Borough Superfund Site East Main/Wall Street Plume. The project will involve a new groundwater treatment system for the purpose of remediating the chlorinated volatile organic compound (CVOC) contaminated plume. Based on previous findings, the wells are being installed to increase the mass of contaminant removal and efficiency of the remedial system.

The October 2010 application for a permit equivalent contains comprehensive data. This includes:

- Estimated influent and effluent data from EW-5A/EW-8; EW-9; EW-6/EW-10 for 1,1 dichloroethene, cis-1,2 dichloroethene, trichloroethene, tetrachloroethene, metals and conventionals (2009 and 2010)
- Monitoring well CVOC data and extraction well concentrations (June 2009)
- Semi-volatile organic compounds (SVOC), pesticides and PCBs groundwater monitoring data (October 2007)
- EW-5A/EW-8, EW-6/EW-10, RW-9 metals and wet chemistry constant rate pump test data (October 2007)
- Estimated influent concentrations - design scenario
- Temperature and pH Groundwater Monitoring Data (2007 through 2010)

An estimated 155 gallons per minute (gpm) will be pumped from five (5) extraction wells to the new treatment building. Contaminated groundwater will be treated with a bag filter and air stripper and discharged to an existing storm sewer pipe, which discharges to the Rockaway River. The maximum design flow is 210 gpm and the discharge will be long term. See attached maps.

This groundwater remediation project is being funded by the USEPA and is being implemented by the United States Army Corps, Kansas City District (USACE). CDM is the USACE remedial design engineer and CAPE Environmental Management, Inc. (CAPE) is the USACE's remedial action construction contractor.

DESCRIPTION OF LIMITATIONS AND CONDITIONS SPECIFIC TO THIS PERMIT EQUIVALENT

Monitoring for **flow** is required pursuant to N.J.A.C. 7:14A-13.13 and 13.14. The monitoring frequency is **once per week** with a **metered** sample type.

The **Total Suspended Solids (TSS)** Daily Maximum limitation of 40 mg/L is economically and technologically achievable for all dischargers based on the monitoring effluent data from other remediation discharge permits which shows average TSS levels well below the proposed limitation. The monitoring frequency is **once per month** with a **grab** sample type.

In order to maintain a reasonable treatment efficiency level and in order to protect against pollutants which may be present in various concentrations in the effluent but have not been assigned specific numerical limitations in this permit, the Department has imposed a limitation for **Total Organic Carbon (TOC)**. A daily maximum limitation of 20 mg/L is applied. This limit has proven to be technologically and economically achievable based on a review of existing data from other discharges. The monitoring frequency is **once per month** with a **grab** sample type.

The **pH range** of 6.0 to 9.0 standard units is being imposed. This range is routinely imposed on all wastewater discharges in the state and is technologically and economically achievable. The monitoring frequency is **once per month** with a **grab** sample type.

Based on the information and data submitted with the October 2010 application, limitations and monitoring conditions for **1,1- Dichloroethylene, Tetrachloroethylene, Trichloroethylene and Zinc** are required at **once per month** with a **grab** sample type. And based on the nature of the discharge, remaining **Volatiles, Acid Compounds, Base/Neutral Compounds, Metals, Cyanide, Pesticide and PCBs** are required to be sampled **once per year** with a **grab** sample type. The limitations are in accordance with N.J.A.C. 7:14A-12, Appendix B-Effluent Standards for Site Remediation Projects. Refer to the effluent limits table on page 5.

Whole Effluent Toxicity (WET):

Section 101(a) of the Clean Water Act (CWA) establishes a national policy of restoring and maintaining the chemical, physical and biological integrity of the Nation's waters. In addition, section 101(a)(3) of the CWA and the State's Surface Water Quality Standards (SWQS) at N.J.A.C. 7:9B-1.5(a)3 state that the discharge of toxic pollutants in toxic amounts is prohibited. Further, 40 CFR 122.44(d) and N.J.A.C. 7:14A-13.6(a) require that where the Department determines that a discharge causes, shows a reasonable potential to cause, or contributes to an excursion above the SWQS, the permitting authority must establish effluent limits for WET. In order to satisfy the requirements of the CWA, the State's SWQS and the NJPDES Regulations, the need for a water quality based effluent limitation (WQBEL) for WET was evaluated for this discharge.

The Department determines if a discharge causes, shows the reasonable potential to cause, or contribute to an excursion above the narrative criteria using the factors outlined in 40 CFR 122.44(d)(1)(ii). These factors are discussed in further detail in Chapter 3, Section 3.2 and 3.3 of the Technical Support Document for Water Quality-based Toxics Control (TSD), March 1991 United States Environmental Protection Agency . If this evaluation indicates that the discharge causes, shows the reasonable potential to cause, or contribute to an excursion above the narrative criteria, the permitting authority must establish a WET limit for the discharge in accordance with 40 CFR 122.44(d)(1)(iii).

Factors which the Department considered in making a determination regarding the reasonable potential for this discharge to violate water quality standards, and the need for a toxicity limit for the discharge are as follows:

Type of Industry: Groundwater remediations deal with the treatment and discharge of groundwater contaminated with toxic pollutants. Therefore, this type of discharge has a high potential to be toxic.

Chemical Specific Data: Information submitted as part of the permit application indicates the presence of several toxicants in the groundwater data. The presence of these pollutants at these levels, either alone or in combination, indicates the possible presence of toxicity in the discharge.

WQBELs for acute and chronic WET were calculated in accordance with N.J.A.C. 7:14A-13.6 and USEPA's TSD. Since the discharge is to a municipal storm sewer, these limits were developed using an acute dilution factor (Df_a) of 1 and a chronic dilution factor (Df_c) of 1.

The CMC and CCC were then used to determine acute and chronic Wasteload Allocations (WLAs) consistent with N.J.A.C. 7:14A-13.5, using a steady state model, as specified in section 5.4.1 of the TSD. Consistent with recommendations in the TSD, values of 0.3 acute toxic unit (TU_a) and 1.0 chronic toxic unit (TU_c) were used to interpret the narrative water quality criteria for WET contained at N.J.A.C. 7:9B-1.14(c) (see Response to Comments 13-74 through 13-89, 29 NJR 1861, (May 5, 1997)). The acute WLA (WLA_a) was translated to equivalent chronic toxic units (WLA_{ac}), to enable comparison of acute and chronic WET limits, by multiplying the WLA_a by an acute to chronic ratio (ACR) of 10.

In the absence of any acute or chronic toxicity data, the ACR was set at the default value of 10 in accordance with the TSD. The acute and chronic WLAs were then converted to an acute Long Term Average (LTA_{ac}) of 0.963 and a chronic LTA (LTA_c) of 0.527, using a default coefficient of variation (CV) of 0.6, and multipliers of 0.321 and 0.527 for the acute and chronic LTAs respectively. Those multipliers are based on the 99th percentile consistent with Response to Comments 13-74 through 13-89, 29 NJR 1861 and are found on Page 102 of the TSD. The resultant LTA_{ac} of 0.963 and LTA_c 0.527 were evaluated and the more protective (e.g. lower) value selected for translation into a daily maximum WET limit using the applicable 99th percentile multiplier, as found on Page 103 of the TSD.

The daily maximum chronic WET limit of 1.64 TU_cs was then converted to a permit limitation expressed as an IC25. The resultant applicable limitation is an IC25 $\geq$ 61 % effluent.

Effluent samples for WET testing are to be collected after the last treatment step, consistent with the collection location for other parameters. Chronic WET shall be monitored on a **quarterly** basis using a **composite** sample.

Test Species and Method

The test species method to be used for chronic testing shall be the *Ceriodaphnia dubia*, Survival and Reproduction Test, 40 CFR 136.3, method 1002.0. Such selection is based on the freshwater characteristics of the receiving stream, and N.J.A.C. 7:9B-1.5.

The Toxicity Reduction Implementation Requirements (TRIR) are included in accordance with N.J.A.C. 7:14A-13.17(a), 7:14A-6.2(a)5 and recommendations in Section 5.8 of the TSD. The requirements are necessary to ensure compliance with the applicable WET limitation. As included in section B.1 of the TRIR requirements, the initial step of the TRIR is to identify the variability of the effluent toxicity and to verify that a consistent toxicity problem does in fact exist.

I. EFFLUENT LIMITATIONS AND MONITORING REQUIREMENTS FOR THE ROCKAWAY WELLFIELD SUPERFUND SITE

There shall be no discharge of floating solids or visible foam in other than trace amounts. There shall be no visible sheen.

Samples taken in compliance with the specified monitoring requirements shall be representative of the discharge and taken after the final treatment step, prior to discharge to the receiving stream.

PARAMETER	DISCHARGE REQUIREMENT					MONITORING REQUIREMENT	
	Units	Minimum	Monthly Average	Daily Maximum	Sample Frequency	RQL (1)	Sample Type
Parameters Once Per Month							
Flow, In Conduit or Thru Treatment Plant	GPD		Report	Report	1 / Month	--	Metered
pH	SU	6.0		9.0	1 / Month	--	Grab
Solids, Total Suspended	mg/l		Report	40	1 / Month	--	Grab
Carbon, Total Organic (TOC)	mg/l		Report	20	1 / Month	--	Grab
Zinc	µg/l		100	200	1 / Month	30	*Grab*
1, 1-Dichloroethylene	µg/l		NL	6	1 / Month	6	Grab
Tetrachloroethylene	µg/l		NL	16	1 / Month	9	Grab
Trichloroethylene	µg/l		NL	5.5	1 / Month	5	Grab
Parameters Once Per Quarter							
Chronic Whole Effluent Toxicity	% Effl.	61			1/ Quarter	--	Composite
Volatile Compounds at Once Per Year							
Acrolein	µg/l		NL	100	1 / Year	50	Grab
Acrylonitrile	µg/l		NL	50	1 / Year	50	Grab
Benzene	µg/l		NL	7	1 / Year	7	Grab
Bromoform	µg/l		NL	8.6	1 / Year	8	Grab
Carbon Tetrachloride	µg/l		NL	6	1 / Year	6	Grab
Chlorobenzene	µg/l		15	28	1 / Year	6	Grab
Chlorodibromomethane	µg/l		NL	8.2	1 / Year	6	Grab
Chloroethane	µg/l		104	268	1 / Year	--	Grab
Chloroform	µg/l		NL	11.4	1 / Year	5	Grab
Dichlorobromomethane	µg/l		NL	5	1 / Year	5	Grab
1,1-Dichloroethane	µg/l		22	59	1 / Year	--	Grab
1,2-Dichloroethane	µg/l		NL	3	1 / Year	3	Grab
1,2-Dichloropropane	µg/l		153	230	1 / Year	--	Grab
1,3-Dichloropropylene	µg/l		10	20	1 / Year	--	Grab
Ethylbenzene	µg/l		32	108	1 / Year	6	Grab
Methyl Bromide	µg/l		20	40	1 / Year	9	Grab
Methyl Chloride	µg/l		86	190	1 / Year	10	Grab
Methylene Chloride	µg/l		NL	9.4	1 / Year	6	Grab
1,1,2,2 Tetrachloroethane	µg/l		NL	10	1 / Year	10	Grab
Toluene	µg/l		26	80	1 / Year	6	Grab
1,2-Trans-Dichloroethylene	µg/l		21	54	1 / Year	4	Grab
1,1,1-Trichloroethane	µg/l		21	54	1 / Year	6	Grab
1,1,2-Trichloroethane	µg/l		NL	12	1 / Year	6	Grab
Vinyl Chloride	µg/l		NL	10	1 / Year	10	Grab
Acid Compounds at Once Per Year							
2-Chlorophenol	µg/l		31	98	1 / Year	20	Grab
2,4 Dichlorophenol	µg/l		39	112	1 / Year	10	Grab
2,4 Dimethylphenol	µg/l		18	36	1 / Year	--	Grab
4,6 Dinitro-O-Cresol	µg/l		NL	60	1 / Year	60	Grab

	Units	Daily Minimum	Monthly Average	Daily Maximum	Sample Frequency	RQL (1)	Sample Type
2,4 Dinitrophenol	µg/l		71	123	1 / Year	40	Grab
2-Nitrophenol	µg/l		41	69	1 / Year	--	Grab
4-Nitrophenol	µg/l		72	124	1 / Year	--	Grab
Pentachlorophenol	µg/l		NL	30	1 / Year	30	Grab
Phenol	µg/l		15	26	1 / Year	10	Grab
2,4,6 Trichlorophenol	µg/l		NL	20	1 / Year	20	Grab
Base/Neutral Compounds at Once Per Year							
Anthracene	µg/l		22	59	1 / Year	10	Grab
Benzidine	µg/l		NL	50	1 / Year	50	Grab
Benzo (a) Anthracene	µg/l		NL	10	1 / Year	10	Grab
Benzo (a) Pyrene	µg/l		NL	20	1 / Year	20	Grab
Benzo (b) fluoranthene	µg/l		NL	10	1 / Year	10	Grab
Benzo (k) fluoranthene	µg/l		NL	20	1 / Year	20	Grab
Bis (2-Chloroethyl) Ether	µg/l		NL	10	1 / Year	10	Grab
Bis (2-Chloroisopropyl) Ether	µg/l		301	757	1 / Year	10	Grab
Bis (2-Ethylhexyl)Phthalate	µg/l		NL	36	1 / Year	30	Grab
Butyl Benzyl Phthalate	µg/l		NL	24	1 / Year	20	Grab
Chrysene	µg/l		NL	20	1 / Year	20	Grab
Dibenzo (a,h) Anthracene	µg/l		NL	20	1 / Year	20	Grab
1,2 Dichlorobenzene	µg/l		77	163	1 / Year	9	Grab
1,3 Dichlorobenzene	µg/l		31	44	1 / Year	9	Grab
1,4 Dichlorobenzene	µg/l		NL	28	1 / Year	20	Grab
3,3 Dichlorobenzidine	µg/l		NL	60	1 / Year	60	Grab
Diethyl Phthalate	µg/l		81	203	1 / Year	10	Grab
Dimethyl Phthalate	µg/l		19	47	1 / Year	10	Grab
Di-N-Butyl Phthalate	µg/l		27	57	1 / Year	20	Grab
2,4 Dinitrotoluene	µg/l		NL	10	1 / Year	10	Grab
2,6 Dinitrotoluene	µg/l		255	641	1 / Year	--	Grab
Fluoranthene	µg/l		25	68	1 / Year	10	Grab
Fluorene	µg/l		22	59	1 / Year	10	Grab
Hexachlorobenzene	µg/l		NL	10	1 / Year	10	Grab
Hexachlorobutadiene	µg/l		NL	10	1 / Year	10	Grab
Hexchlorocyclopentadiene	µg/l		240	480	1 / Year	10	Grab
Hexachloroethane	µg/l		19	38	1 / Year	10	Grab
Indeno (1,2,3-cd) Pyrene	µg/l		NL	20	1 / Year	20	Grab
Isophorone	µg/l		NL	20	1 / Year	10	Grab
Naphthalene	µg/l		22	59	1 / Year	8	Grab
Nitrobenzene	µg/l		17	34	1 / Year	10	Grab
N-Nitrosodimethylamine	µg/l		NL	20	1 / Year	20	Grab
N-Nitrosodiphenylamine	µg/l		NL	20	1 / Year	20	Grab
Phenanthrene	µg/l		22	59	1 / Year	10	Grab
Pyrene	µg/l		25	67	1 / Year	20	Grab
1,2,4 Trichlorobenzene	µg/l		68	140	1 / Year	10	Grab
Metals and Cyanide at Once Per Year							
Chromium	µg/l		50	100	1 / Year	10	Grab
Copper	µg/l		50	100	1 / Year	10	Grab
Arsenic	µg/l		50	100	1 / Year	8	Grab
Cadmium	µg/l		50	100	1 / Year	4	Grab
Lead	µg/l		50	100	1 / Year	10	Grab
Mercury	µg/l		NL	1	1 / Year	1	Grab
Nickel	µg/l		72	144	1 / Year	10	Grab
Selenium	µg/l		50	100	1 / Year	10	Grab

	Units	Daily Minimum	Monthly Average	Daily Maximum	Sample Frequency	RQL (1)	Sample Type
Silver	µg/l		25	50	1 / Year	2	Grab
Cyanide	µg/l		100	200	1 / Year	40	Grab
Pesticides, PCBs and Dioxin at Once Per Year							
Aldrin	µg/l		NL	0.04	1 / Year	0.04	Grab
Alpha-BHC	µg/l		NL	0.02	1 / Year	0.02	Grab
Beta-BHC	µg/l		0.137	0.274	1 / Year	0.04	Grab
Gamma – BHC (Lindane)	µg/l		NL	0.08	1 / Year	0.03	Grab
Chlordane	µg/l		NL	0.2	1 / Year	0.2	Grab
4,4 DDT	µg/l		NL	0.06	1 / Year	0.06	Grab
4,4 DDE	µg/l		NL	0.04	1 / Year	0.04	Grab
4,4 DDD	µg/l		NL	0.04	1 / Year	0.04	Grab
Dieldrin	µg/l		NL	0.03	1 / Year	0.03	Grab
Alpha-Endosulfan	µg/l		NL	0.02	1 / Year	--	Grab
Beta-Endosulfan	µg/l		NL	0.04	1 / Year	--	Grab
Endosulfan Sulfate	µg/l		0.93	1.86	1 / Year	0.08	Grab
Endrin	µg/l		NL	0.04	1 / Year	0.04	Grab
Endrin Aldehyde	µg/l		0.76	1.52	1 / Year	0.1	Grab
Heptachlor	µg/l		NL	0.02	1 / Year	0.02	Grab
Heptachlor Epoxide	µg/l		NL	0.4	1 / Year	0.4	Grab
Toxaphene	µg/l		NL	1	1 / Year	1	Grab
PCBs 1242, 1254, 1221	µg/l		NL	NL	1 / Year	0.5	Grab
PCBs 1232, 1248, 1260, 1016	µg/l		NL	NL	1 / Year	0.5	Grab
Dioxin 2, 3, 7, 8-Tetrachlorodibenzo-p-Dioxin	µg/l		NL	0.01	1 / Year	0.5	Grab

(1) The permittee shall ensure that analytical data is sampled at detection levels as sensitive as the Recommended Quantitation Levels (RQL's) for any of the above parameters limited in this individual permit equivalent.

GPD - Gallons per day mg/l - Milligrams per liter. ug/l - Micrograms per liter. NL- No Limit

All monitoring shall be conducted in accordance with the Department's current Field Sampling Procedures Manual, which is available from the Maps & Publications Office at (609) 777-1038.

All test results shall be summarized in a format previously approved by the Bureau of Design and Construction and reported monthly to the following address within 25 days of the start of the following month after commencement of discharge and every month thereafter until the discharge is permanently terminated:

New Jersey Department of Environmental Protection
Bureau of Investigation, Design & Construction, 6th floor ATTN: Craig Wallace
P.O. Box 413
Trenton, NJ 08625-413

II. Reopener Clause

This bureau may modify or suspend this permit equivalent to incorporate additional limitations or monitoring requirements if deemed appropriate.

III. Suspension of Permit Equivalent

Violations of any condition of this permit equivalent shall be cause for a suspension of the permit equivalent. Upon suspension of this permit equivalent, the discharger shall cease direct discharge to surface water and take corrective actions to achieve compliance.

STATE OF NEW JERSEY
DEPARTMENT OF ENVIRONMENTAL PROTECTION
DIVISION OF LAND USE REGULATION
501 East State Street, Station Plaza 5, 2nd Floor
P.O. Box 439, Trenton, New Jersey 08625-0439
Fax: (609) 777-3656 or (609) 292-8115
www.state.nj.us/dep/landuse

PERMIT

In accordance with the laws and regulations of the State of New Jersey, the Department of Environmental Protection hereby grants this permit to perform the activities described below. This permit is revocable with due cause and is subject to the limitations, terms and conditions listed below and on the attached pages. For the purpose of this document, "permit" means "approval, certification, registration, authorization, waiver, etc." Please note that violation of any term, condition or limitation of this permit is a violation of the implementing rules and may subject the permittee to enforcement action.

Approval Date: MAR 17 2011

Expiration Date: MAR 16 2016

Permit Number/s	Type of Approval/s	Enabling Statute/s
1434-10-0001.1 FHA 100001	FHA Individual Permit	N.J.S.A. 13:1D-1 et seq. N.J.S.A. 58:10A-1 et seq. N.J.S.A. 58:16A-50 et seq.

Applicant	Owner (if different from applicant)
United States Protection Agency (Brian Quinn) 290 Broadway New York, NY 10007	Borough of Rockaway 1 East Main Street Borough of Rockaway, NJ 07866

Description of Authorized Activities and Limit of Disturbance

This document authorizes the construction of the groundwater extraction and treatment system consisting of the treatment building and associated piping, as part of the remedial action to address the contaminant plume associated with the Borough of Rockaway Wellfield Superfund Site, in the flood hazard area of the Rockaway River, in the Borough of Rockaway, Morris County, New Jersey. The treatment system consists of the treatment building to be constructed on Lot 18 of Block 14, at the intersection of Jackson Avenue and Ogden Avenue, and associated piping in the right of way along Union Street, Jackson Avenue, Halsey Avenue and Maple Avenue, in the Borough of Rockaway, Morris County.

Note: You must notify the Department in writing at least seven (7) days prior to undertaking any activity authorized by this document. Please direct your notification to the project manager listed below, using the address or fax number shown above.

Project Location	Received by County Clerk
Intersection of Jackson Avenue and Ogden Avenue, Lot No. 18 of Block No. 14, and right of way along Union Street, Jackson Avenue, Halsey Avenue and Maple Avenue Borough of Rockaway, Morris County.	

Project Manager's Signature

Vinaya Vardhana

Document Prepared By: Vinaya Vardhana
Telephone: (609) 777-0454

Note: This document must be recorded in the Office of the County Clerk for each county in which the project is located. Once all necessary stamps have been obtained, please mail or fax a copy of this page to the project manager noted to the left within 30 days of the issuance date (or within 90 days if multiple counties are involved). Please note that additional information must be filed with each County Clerk if this approval includes a flood hazard area verification, as described in the following conditions.

APPROVAL NOT VALID UNLESS AUTHORIZING SIGNATURE APPEARS ON LAST PAGE

STANDARD CONDITIONS:

1. **Other necessary approvals:** Activities regulated under the Flood Hazard Area Control Act rules may also be subject to other Federal, State and/or local rules, plans and ordinances. Authorization to undertake a regulated activity under these rules does not indicate that the activity also meets the requirements of any other rule, plan or ordinance. It is the applicant's responsibility to obtain all necessary approvals for a proposed project. *N.J.A.C. 7:13-1.1(e)*

2. **Acceptance of approval:** If you undertake any activity authorized by this document, you thereby accept this document in its entirety and agree to adhere to all terms and conditions listed below. If you do not accept or agree with this document in its entirety, **do not** begin construction. You are entitled to request an appeal of this decision within a limited time as discussed in condition #3 below. You may also contact the project manager shown on the first page of this approval if you have any questions or concerns. *N.J.A.C. 7:13-9.5(a)*

3. **Appeal of approval:** In accordance with N.J.A.C. 7:13-18.1 (and N.J.A.C. 7:7A-1.7 for freshwater wetlands approvals), any person who is aggrieved by this decision may request a hearing within 30 days after notice of the decision is published in the DEP Bulletin by writing to: New Jersey Department of Environmental Protection, Office of Legal Affairs, Attention: Adjudicatory Hearing Requests, 401 East State Street, P.O. Box 402, Trenton, NJ 08625-0402. This request must include a completed copy of the Administrative Hearing Request Checklist. The DEP Bulletin is available through the Department's website at www.state.nj.us/dep and the Checklist is available through the Division's website at www.state.nj.us/dep/landuse/forms/index.html. *N.J.A.C. 7:13-18.1*

4. **Duration of approval:** This document is valid for five years from its issuance date and shall not be extended. However, the Department can transfer an individual permit and/or verification with the sale of a property to a new owner pursuant to N.J.A.C. 7:13-14.1. *N.J.A.C. 7:13-9.4(a)*

5. **Duty to comply:** The permittee, its contractors and subcontractors shall comply with all conditions of the permit, supporting documents and approved drawings. Any noncompliance with a permit constitutes a violation of the Flood Hazard Area Control Act rules, and is grounds for enforcement action pursuant to N.J.A.C. 7:13-19, as well as suspension and/or termination of the permit. *N.J.A.C. 7:13-9.5(b)1*

6. **Duty to reapply:** If the permittee wishes to continue an activity covered by the permit after the expiration date of the permit, the permittee must apply for and obtain a new permit. *N.J.A.C. 7:13-9.5(b)2*

7. **Duty to halt or reduce activity:** It shall not be a defense for a permittee in an enforcement action that it would have been necessary to halt or reduce the permitted activity in order to maintain compliance with the conditions of the permit. *N.J.A.C. 7:13-9.5(b)3*

8. **Duty to minimize environmental impacts:** The permittee shall take all reasonable steps to prevent, minimize or correct any adverse impact on the environment resulting from activities conducted pursuant to the permit, or from noncompliance with the permit. *N.J.A.C. 7:13-9.5(b)4*

9. **Proper operation and maintenance:** The permittee shall at all times properly operate and maintain all facilities and systems of treatment and control (and related appurtenances) which are installed or used to achieve compliance with the permit. Proper operation and maintenance includes effective performance, adequate funding, adequate operator staffing and training, and adequate laboratory and process controls, including appropriate quality assurance procedures. The operation of back-up or auxiliary facilities or similar systems is only required when necessary to achieve compliance with the permit. The permittee must also properly execute any approved mitigation compensation and/or

restoration proposal designed to mitigate losses caused by the permitted activity. The permittee shall maintain the authorized work areas in good condition and in accordance with the permit. *N.J.A.C. 7:13-9.5(b)5*

10. **Proper oversight:** The permittee shall ensure that all approved activities are undertaken using the best management practices available under the supervision and direction of an engineer at all points necessary to ensure compliance with all permit conditions. *N.J.A.C. 7:13-9.5(b)6*

11. **Proper site maintenance:** While the regulated activities are being undertaken, neither the permittee nor its agents shall cause or permit any unreasonable interference with the free flow of a regulated water by placing or dumping any materials, equipment, debris or structures within or adjacent to the channel. Upon completion or abandonment of the work, the permittee and/or its agents shall remove and dispose of in a lawful manner all excess materials, debris, equipment, silt fences and other temporary soil erosion and sediment control devices from all regulated areas. *N.J.A.C. 7:13-9.5(b)7*

12. **Permit actions:** A permit can be revised, suspended or terminated for cause. The filing of a request by the permittee for a revision, or a notification of planned changes or anticipated noncompliance does not stay any condition of a permit. *N.J.A.C. 7:13-9.5(b)8*

13. **Property rights:** A permit does not convey any property rights of any sort, or any exclusive privilege. *N.J.A.C. 7:13-9.5(b)9*

14. **Duty to provide information:** A copy of the general permit and other authorizing documents including all approved plans and drawings shall be maintained at the authorized site at all times and made available to Department representatives or their designated agents immediately upon request. The permittee shall also furnish to the Department within a reasonable time any information that the Department requests to determine compliance with a permit or to determine whether cause exists for suspension or termination of a permit. The permittee shall also furnish to the Department, upon request, copies of records required to be kept by the permit. *N.J.A.C. 7:13-9.5(b)10*

15. **Inspection and entry:** The permittee shall allow an authorized representative of the Department, at reasonable times and upon the presentation of credentials, to:
    i. Enter upon the permittee's premises where a regulated activity is located or conducted, or where records must be kept under the conditions of the permit;
    ii. Have access to and copy any records that must be kept under the conditions of the permit; and
    iii. Inspect any facilities, equipment, practices or operations regulated or required under the permit. Failure to allow reasonable access under this section shall be considered a violation of the Flood Hazard Area Control Act rules and subject the permittee to enforcement action pursuant to N.J.A.C. 7:13-19. *N.J.A.C. 7:13-9.5(b)11*

16. **Reporting requirements:** The permittee shall provide reports to the Department as follows:
    i. Planned changes: The permittee shall give notice to the Department prior to any planned physical alterations or additions to the permitted project or activity;
    ii. Transfers: The permit is not transferable to any person unless the transfer is approved by the Department, pursuant to N.J.A.C. 7:13-14.1;
    iii. Noncompliance: The permittee shall immediately report to the Department by telephone at (877) 927-6337 any noncompliance that may endanger health or the environment. The permittee shall report all other noncompliance to the Division of Land Use Regulation by telephone at (609) 292-0060 within two business days of the time the permittee becomes aware of the noncompliance, and in writing within five business days of the time the permittee becomes

aware of the noncompliance. The written notice shall include: a description of the noncompliance and its cause; the period of noncompliance, including exact dates and times, and, if the noncompliance has not been corrected, the anticipated length of time it is expected to continue; and steps taken or planned to reduce, eliminate and prevent recurrence of the noncompliance. Such notice shall not, however, serve as a defense to enforcement action if the project is found to be in violation of the Flood Hazard Area Control Act rules; and

iv. Other information: Where the permittee becomes aware that it failed to submit any relevant facts in an application, or submitted incorrect information in an application or in any report to the Department, it shall promptly submit such facts or information. *N.J.A.C. 7:13-9.5(b)12*

SPECIAL CONDITIONS IN ADDITION TO THE STANDARD CONDITIONS *N.J.A.C. 7:13-9.5(c)*

17. All foundations, slabs, footings and walls of the proposed structure/s shall be designed to resist uplift, floatation, collapse and displacement due to hydrostatic and hydrodynamic forces resulting from flooding to the design flood elevation of 516.0 feet NGVD. Furthermore, all structural components shall be designed to resist the same forces. Compliance with this condition shall be determined by the municipal construction official.

18. The Department has approved this flood hazard area permit because the project satisfies the requirements of the Flood Hazard Area Control Act Rules. The Department has not reviewed the proposed structure/s to determine compliance with the International Building Code or any other local construction codes or flood ordinances. The proposed building/s may therefore not fully comply with any such requirements. Please contact your municipal construction official for further information.

19. All excavated material shall be disposed of in a lawful manner outside of any flood hazard area, riparian zone, open water, freshwater wetland and adjacent transition area, and in such a way as to not interfere with the positive drainage of the receiving area.

20. All sediment barriers and other soil erosion control measures shall be installed prior to commencing any clearing, grading or construction onsite, and shall be maintained in proper working condition throughout the entire duration of the project.

21. **The site (Block 40, Lot 76) where the net fill compensation is provided shall be deed restricted against future flood storage volume displacement. The modified deed shall be filed with the local county clerk, a copy of which shall be provided to the Department within 90 calendar days of the issuance of this permit.**

22. The applicant, prior to the commencement of the herein-permitted activities, must obtain all necessary local, Federal, and other State approvals. Approvals from the following may be required: Morris County Soil Conservation District.

23. The drawings hereby approved are four (4) sheets prepared by KERSHU TAN, New Jersey Professional Engineer, dated November, 2010, unrevised, entitled:

    "US ARMY CORPS OF ENGINEERS KANSAS CITY DISTRICT GROUNDWATER TREATMENT FACILITY PACKAGE ROCKAWAY BOROUGH SUPERFUND SITE EAST MAIN/WALL STREET PLUME – OU2 ROCKAWAY BOROUGH, NEW JERSEY"

    "AREA MAP", Sheet No. G2,

"SITE PLAN", Sheet No. C2,

"BLOCK 40 LOT 76 EXISTING CONDITIONS", Sheet No. 1, and

"BLOCK 40 LOT 76 PROPOSED AREA OF CUT", Sheet No. 2.

Dennis Contois

Dennis Contois, Supervisor
Bureau of Inland Regulation

3-17-2011
Date

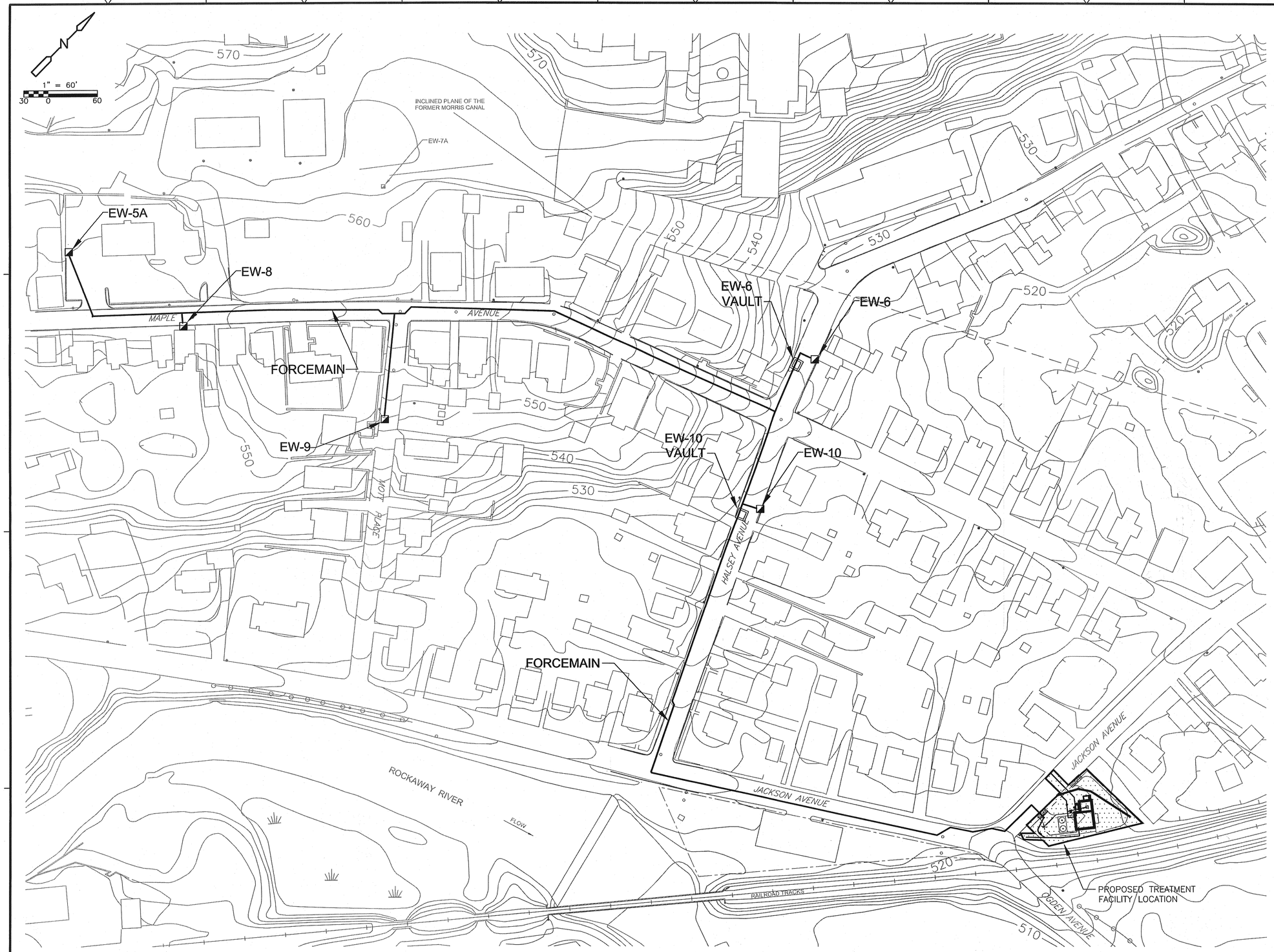

LEGEND

- NEW FORCE MAIN LINE
- NEW GROUNDWATER EXTRACTION WELL
- APPROXIMATE LIMITS OF DESIGN PACKAGE

NOTES

1. DRAWINGS ARE BASED ON SURVEY PREPARED BY STEWART SURVEYING & ENGINEERING LLC DATED AUGUST 2004 AND JULY 2005 AND LAN ASSOCIATES AUGUST 2007.
2. HORIZONTAL COORDINATE SYSTEM IS NEW JERSEY STATE PLANE NAD27. VERTICAL COORDINATE SYSTEM IS NGVD 1929.

APPROVED
File No.
1434-10-0001.1
State of
Department of Environmental Protection
Division of Land Use Regulation

100% SUBMITTAL

KERSHU TAN
PROFESSIONAL ENGINEER
NJ LICENSE NO.
24GE04395200
11/9/2010

REV. NO.	DATE	DRWN	CHKD	REMARKS

DESIGNED BY: E. GALLERIE
DRAWN BY: E. GALLERIE
SHEET CHK'D BY: M. POPPER
CROSS CHK'D BY: K. TAN
APPROVED BY: K. TAN
DATE: NOVEMBER 2010

PREPARED BY:
CDM Federal Programs Corporation
FOR:
CAPE
CAPE Environmental Management, Inc.

US Army Corps of Engineers Kansas City District
GROUNDWATER TREATMENT FACILITY PACKAGE
ROCKAWAY BOROUGH SUPERFUND SITE
EAST MAIN/WALL STREET PLUME - OU2
ROCKAWAY BOROUGH, NEW JERSEY

AREA MAP

PROJECT #61090-6170-004
FILE NAME: GSTPL002
SHEET NO.
G-2

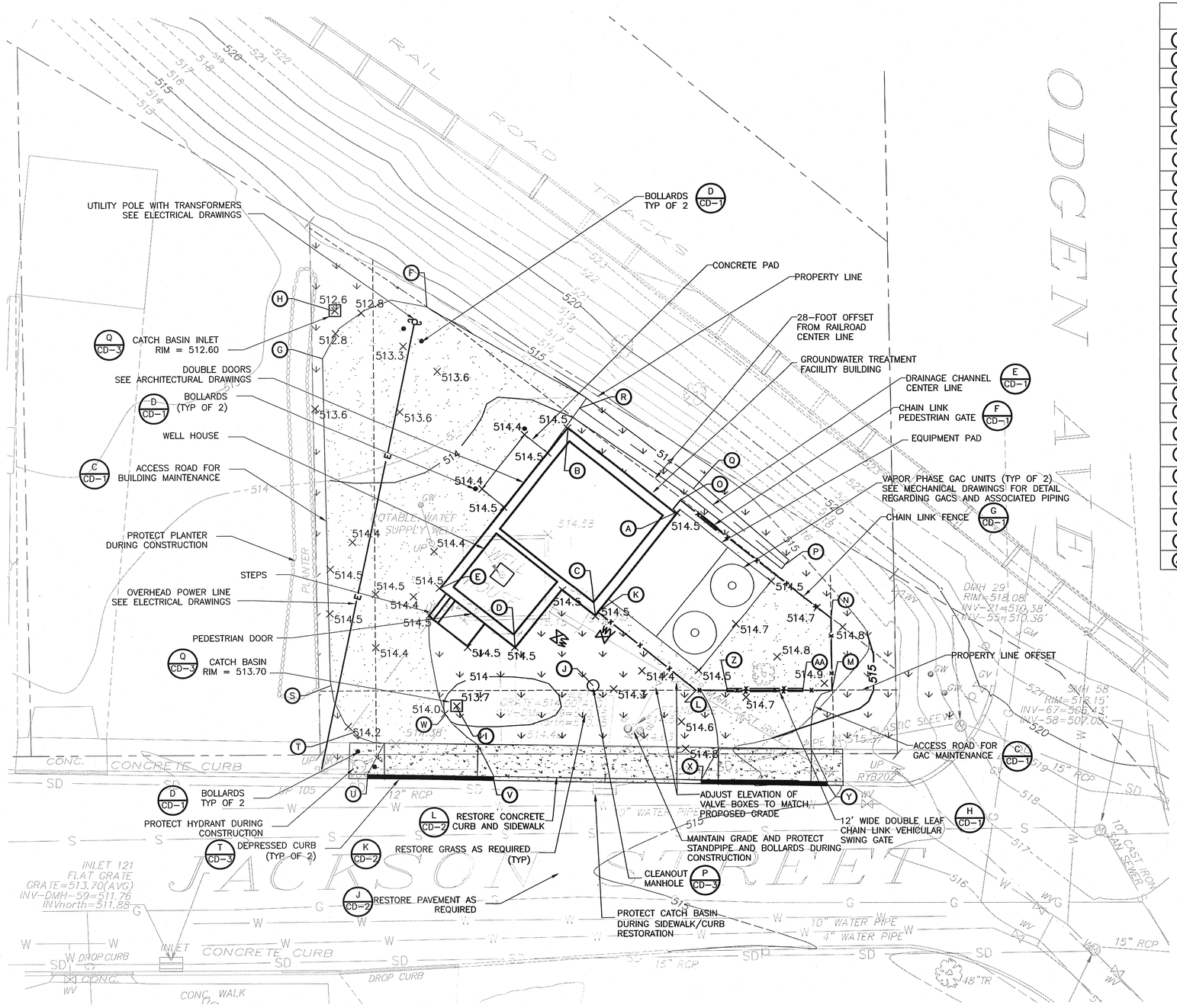

	NORTHING	EASTING	DESCRIPTION
A	753731	2043779	BUILDING CORNER
B	753750	2043794	BUILDING CORNER
C	753745	2043761	BUILDING CORNER
D	753759	2043756	BUILDING CORNER
E	753772	2043766	BUILDING CORNER
F	753774	2043815	EDGE OF CRUSHED STONE PARKING AREA
G	753792	2043806	EDGE OF CRUSHED STONE PARKING AREA
H	753790	2043814	CATCH BASIN
I	753769	2043746	CATCH BASIN
J	753746	2043749	CLEAN-OUT MANHOLE
K	753745	2043762	FENCE CORNER
L	753727	2043748	FENCE CORNER
M	753704	2043748	FENCE CORNER
N	753704	2043761	FENCE CORNER
O	753730	2043782	FENCE CORNER
P	753712	2043770	SWALE CENTER LINE
Q	753728	2043784	SWALE CENTER LINE
R	753748	2043798	SWALE CENTER LINE
S	753791	2043749	EDGE OF ACCESS ROAD
T	753787	2043741	EDGE OF ACCESS ROAD
U	753785	2043734	LIMITS OF CONCRETE APRON
V	753763	2043733	LIMITS OF CONCRETE APRON
W	753771	2043744	EDGE OF ACCESS ROAD
X	753727	2043733	LIMITS OF CONCRETE APRON
Y	753705	2043732	LIMITS OF CONCRETE APRON
Z	753723	2043748	GATE POST
AA	753709	2043748	GATE POST

N

NOTES

1. DRAWINGS ARE BASED ON SURVEY PREPARED BY STEWART SURVEYING & ENGINEERING LLC DATED AUGUST 2004 AND JULY 2005 AND LAN ASSOCIATES AUGUST 2007.

2. HORIZONTAL COORDINATE SYSTEM IS NEW JERSEY STATE PLANE NAD27. VERTICAL COORDINATE SYSTEM IS NGVD 1929.

3. INSTALL SEDIMENT CONTROL MEASURES IN WORK AREA BEFORE BEGINNING WORK IN ACCORDANCE WITH THE CONTRACTOR'S APPROVED SOIL EROSION AND SEDIMENT CONTROL PLAN AND MAINTAIN SEDIMENT CONTROL MEASURES AND DO NOT REMOVE UNTIL GROUND SURFACE IS RESTORED AND STABILIZED.

4. PRIOR TO COMMENCEMENT OF WORK CONTACT THE NEW JERSEY ONE-CALL SYSTEM TO LOCATE UTILITIES WITHIN THE WORK AREA.

5. VEHICLE AND EQUIPMENT STAGING, SOIL, STOCKPILE AREA AND TEMPORARY STORAGE FOR EXCESS EXCAVATED AND/OR WASTE MATERIALS WILL BE AT LOCATIONS DESIGNATED BY THE CONTRACTING OFFICER. NO SOIL, EQUIPMENT, OR MATERIALS SHALL BE STORED BENEATH OVERHEAD ELECTRICAL TRANSMISSION LINES.

6. TRAFFIC CONTROL SHALL BE PERFORMED IN ACCORDANCE WITH THE CONTRACTOR'S APPROVED TRAFFIC CONTROL PLAN.

7. PROTECT ALL UTILITIES AND SITE FEATURES DESIGNATED TO REMAIN DURING CONSTRUCTION. PROMPTY REPAIR DAMAGE CAUSED BY CONSTRUCTION OPERATIONS AT NO COST TO THE GOVERNMENT.

8. SITE SHALL BE GRADED FOR POSITIVE DRAINAGE TOWARDS ONE OF THE TWO NEW CATCH BASINS.

9. GRASS SHALL BE RESTORED TO THE EXISTING GRASS LIMITS.

10. CATCH BASINS AND MANHOLES SHALL BE DESIGNED FOR FLOTATION AND HYDROSTATIC FORCES IN ACCORDANCE WITH THE NEW JERSEY DEPARTMENT OF ENVIRONMENTAL PROTECTION FLOOD HAZARD AREA REQUIREMENTS, AVAILABLE AT: HTTP://WWW.STATE.NJ.US/DEP/LANDUSE/7-13.PDF.

11. SPOT ELEVATIONS FOR PROPOSED GRADING INDICATE FINAL GRADE ELEVATIONS.

APPROVED
1434-10-0001.1
State of New Jersey
Department of Environmental Protection
Division of Land Use Regulation

LEGEND

- FENCE LINE
- POWER POLE
- MONITORING WELL
- SD — STORM DRAIN LINE
- G — GAS LINE
- OE — OVERHEAD ELECTRICAL LINE
- SS — SANITARY SEWER LINE
- W — WATER LINE
- MANHOLE
- CATCH BASIN
- HYDRANT
- TREE
- WV — WATER VALVE
- GV — GAS VALVE
- GW — GUY WIRE
- SEV — SEWER CLEANOUT
- DEPRESSED CURB
- E — OVERHEAD ELECTRICAL
- 514 — PROPOSED INTERMEDIATE CONTOUR
- 515 — PROPOSED INDEX CONTOUR
- WV — NEW WATER VALVE BOX
- x515 — PROPOSED SPOT ELEVATION
- DRAINAGE CHANNEL CENTERLINE
- GRASS
- CRUSHED STONE ACCESS ROAD/PARKING AREA
- CONCRETE SIDEWALK
- MANHOLE
- X — FENCE
- BOLLARD
- CATCH BASIN
- J — COORDINATE CALLOUT

1" = 10'
5 0 10

100% SUBMITTAL

KERSHU TAN
PROFESSIONAL ENGINEER
NJ LICENSE NO. 24GE04395200
11/9/2010

REV. NO.	DATE	DRWN	CHKD	REMARKS

DESIGNED BY: E. GALLERIE
DRAWN BY: E. GALLERIE
SHEET CHK'D BY: M. POPPER
CROSS CHK'D BY: K. TAN
APPROVED BY: K. TAN
DATE: NOVEMBER 2010

PREPARED BY:
CDM Federal Programs Corporation
FOR:
CAPE
CAPE Environmental Management, Inc.

US Army Corps of Engineers Kansas City District
GROUNDWATER TREATMENT FACILITY PACKAGE
ROCKAWAY BOROUGH SUPERFUND SITE
EAST MAIN/WALL STREET PLUME - OU2
ROCKAWAY BOROUGH, NEW JERSEY

SITE PLAN

PROJECT #61090-6170-004
FILE NAME: CSTPL002

SHEET NO.
C-2

J:\56540\6170\CIVL\ CSTPL003 10/09/07 15:35 larsonej XREFS: RKAWYBDR, XSTPL001

N

APPROVED

1434-10-0001.1

State of
Department of Environmental Protection
Division of Land Use Regulation

LEGEND

WATER LINE	W
FIRE HYDRANT	
WATER SHUTOFF	
UTILITY METER	
VALVE	
GAS LINE	G
ELECTRIC BOX	
ELECTRIC LINE	E
OVERHEAD WIRES	
UTILITY POLE	
GUY WIRE	
LIGHT POLE	
TELEPHONE LINE	T
STORM SEWER	ST
CATCH BASIN	
MANHOLES	
FOOTING DRAIN	FD
ROOF DRAIN	RD
SANITARY SEWER	SAN
CLEAN OUT	
SIGN	
FLAGPOLE	
MAILBOX	
DUMPSTER	
TREE	
TREE LINE	
BUSH	
GUIDERAIL	
WALLS	
FENCE	
SPOT ELEVATION	x10.60 ×10.60 10.60x
CONTOUR LINE	114
SOIL BORING LOCATION	B-1
FIRST FLOOR ELEVATION	F.F.=

SURVEY NOTES:
1. DEED BOOK 21191 PAGE1992 DEED BOOK 20741 PAGE 157

2. MAP ENTITLED "SURVEY OF BLOCK 40 LOT 76.02, BOROUGH OF ROCKAWAY, MORRIS COUNTY, N.J." PERFORMED BY SPILANE ENGINEERING ASSOCIATES L.L.C., MICHAEL J. SPILLANE P.E. & L.S. LIC.# 17560, DATED 07/31/07.

3. TAX MAP SHEETS No. 13, 14 OF THE BOROUGH OF ROCKAWAY, MORRIS COUNTY, NEW JERSEY.

GENERAL NOTES:
1. PROPERTY SUBJECT TO DOCUMENTS OF RECORD.

2. THE SUBJECT PROPERTY IS SUBJECT TO EASEMENTS, RESTRICTIONS, OR EXCEPTIONS, OR CONVEYANCES THAT MAY EXIST.

3. ONLY SURFACE CONDITIONS ARE SHOWN, NO RESPONSIBILITY IS TAKEN FOR BURIED PIPES, WIRES, SEPTIC, WELLS, UST'S, ETC.

4. THE SUBJECT PROPERTY IS SUBJECT TO THE RIGHTS OF THE PUBLIC IN ANY PORTION OF SAID PROPERTY LYING WITHIN THE RIGHTS OF WAY OF THE ROADS SHOWN.

5. PROPERTY SUBJECT TO AN ACCURATE TITLE SEARCH.

6. ELEVATION DATUM IS NGVD'29

7. TO CONVERT EXISTING ELEVATIONS INSIDE THE AREA OF THE TOPOGRAPHIC SURVEY FROM NGVD'29 DATUM INTO AN APPROXIMATE NAVD'88 DATUM, ADD 0.802' TO THE EXISTING ELEVATIONS.

1" = 40'
20 0 40

KERSHU TAN
PROFESSIONAL ENGINEER
NJ LIC. NO. 24GE04395200

REV. NO.	DATE	DRWN	CHKD	REMARKS

DESIGNED BY: M. POPPER
DRAWN BY: M. TOUAYL
SHEET CHK'D BY: M. POPPER
CROSS CHK'D BY:
APPROVED BY: K. TAN
DATE: NOVEMBER 2010

PREPARED BY:
CDM Federal Programs Corporation
FOR:
CAPE
CAPE Environmental Management, Inc.

US Army Corps of Engineers Kansas City District
GROUNDWATER TREATMENT FACILITY PACKAGE
ROCKAWAY BOROUGH SUPERFUND SITE
EAST MAIN/WALL STREET PLUME - OU2
ROCKAWAY BOROUGH, NEW JERSEY

BLOCK 40 LOT 76
EXISTING CONDITIONS

PROJECT #61090-6170-004
FILE NAME: CSTPL002
SHEET NO.
1

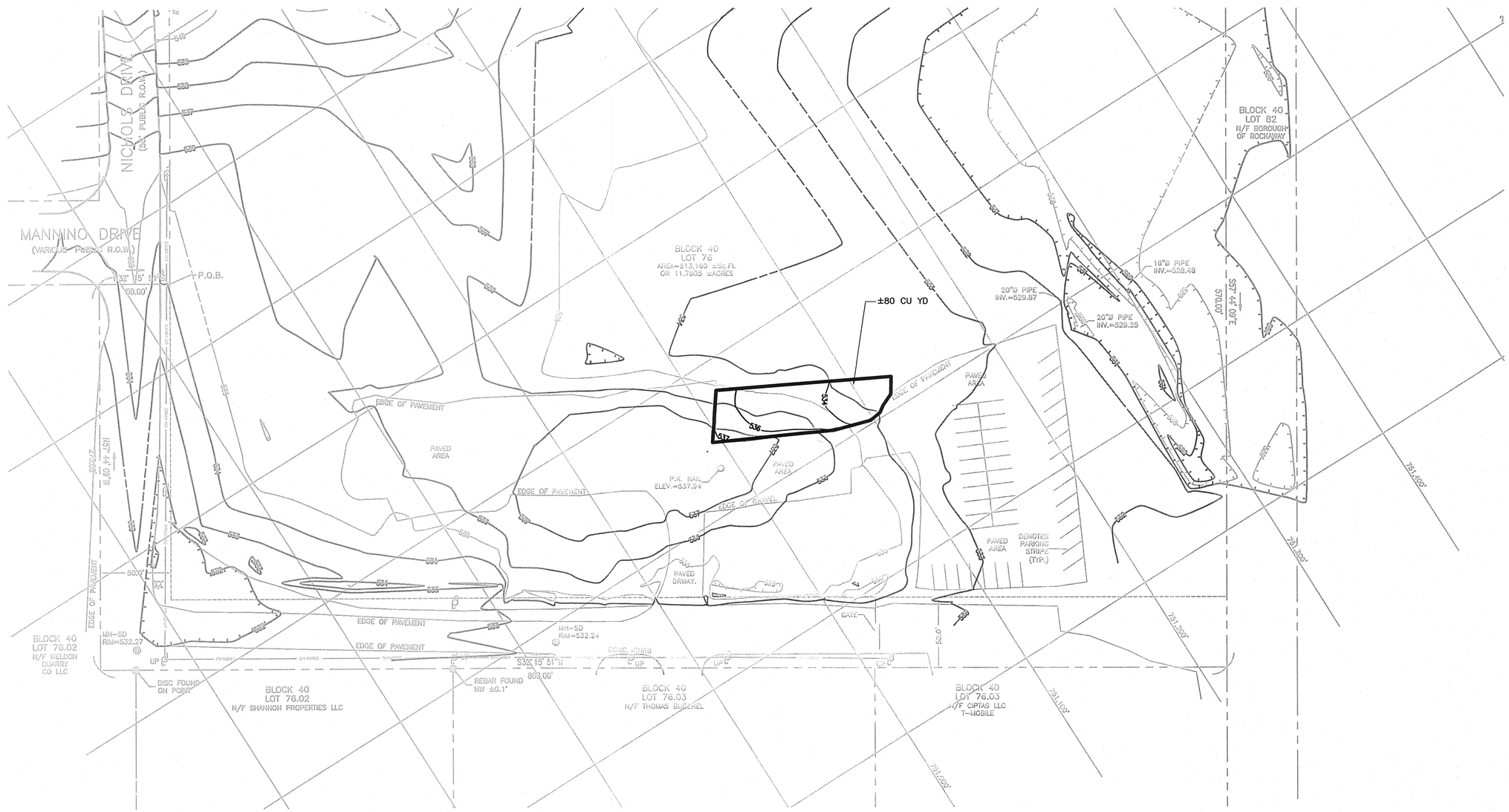

APPROVED
File No.
1434-10-0001.1
State of New Jersey
Department of Environmental Protection
Division of Land Use Regulation

1" = 40'
20 0 40

KERSHU TAN
PROFESSIONAL ENGINEER
NJ LIC. NO. 24GE04395200
12/16/2010

REV. NO.	DATE	DRWN	CHKD	REMARKS

DESIGNED BY: M. POPPER
DRAWN BY: M. TOUAYL
SHEET CHK'D BY: M. POPPER
CROSS CHK'D BY:
APPROVED BY: K. TAN
DATE: NOVEMBER 2010

PREPARED BY:
CDM Federal Programs Corporation
FOR:
CAPE
CAPE Environmental Management, Inc.

US Army Corps of Engineers Kansas City District
GROUNDWATER TREATMENT FACILITY PACKAGE
ROCKAWAY BOROUGH SUPERFUND SITE
EAST MAIN/WALL STREET PLUME - OU2
ROCKAWAY BOROUGH, NEW JERSEY

BLOCK 40 LOT 76
PROPOSED AREA OF CUT

PROJECT #61090-6170-004
FILE NAME: CSTPL002
SHEET NO.
2

110 Fieldcrest Avenue, 6th Floor
Edison, New Jersey 08837
tel: +1 732 225-7000
fax: +1 732 225-7851

November 3, 2010

New Jersey Department of Environmental Protection
Division of Water Supply - Bureau of Water Systems and Well Permitting
P.O. Box 416
401 East State Street
Trenton, NJ 08625-0426

Subject: United States Environmental Protection Agency
Rockaway Borough Well Field Superfund Site,
East Main/Wall Street Plume -OU2
Rockaway Borough, Morris County, New Jersey
Physical Connection Permit Equivalencies

To whom it may concern:

On behalf of the applicant, the United States Environmental Protection Agency (USEPA), CDM hereby submits permit equivalency applications for the two physical connections associated with the remedial action of the East Main/Wall Street Plume at the subject site.

The following documents are enclosed for review;

- Application Form for Initial Physical Connection Permit –Borough of Rockaway East Main/Wall Street Plume Remediation System Extraction Wells
- Application Form for Initial Physical Connection Permit –Borough of Rockaway Water Supply Well No.1
- Owner Certification
- Select Site Civil, Mechanical, and Instrumentation drawings

Please note that this is a federally-funded CERCLA project and as such State fees are waived. Should you have any questions or concerns regarding this Physical Connection Permit Equivalency Application please contact me at 732-590-4661. Thank you in advance for your attention and timely review of this application.

Very truly yours,

Kershu Tan, P.E.
Project Manager
CDM Federal Programs Corporation

cc: B. Quinn, EPA
K. O'Brien, USACE
C. Wallace, NJDEP-SRP
D. Bettendorf, Cape Environmental Management, Inc.
S. Seifert, Rockaway Borough
M. Popper, CDM
File: 6170-003

Enclosures (Application package)

Physical Connection Permit Equivalency for: Borough of Rockaway Water Supply Well No. 1

Physical Connection Permit Number _____-WPC_____

State of New Jersey
DEPARTMENT OF ENVIRONMENTAL PROTECTION
Division of Water Supply - Bureau of Water Systems and Well Permitting
401 East State Street – P.O. Box 426, Trenton, New Jersey 08625-0426

Application Form for Initial Physical Connection Permit

1/ Applicant Details
Applicant/Owner/Company Name United States Environmental Protection Agency
Permanent Legal Address 290 Broadway
City/Town New York State NY Zip Code 10007 -
Telephone (212) 637-4381 Fax Number (212) 637-4429 e-mail -
Contact Person Name Brian Quinn Title Remedial Project Manager

2/ Details of Facility
Name of Facility Borough of Rockaway East Main/Wall Street Plume Groundwater Treatment Facility
Address of Facility (Street/Road) Jackson Street and Odgen Avenue
Municipality Borough of Rockaway County Morris
Zip Code 07866 - _____ Block 14 Lot 18

This Initial Physical Connection Permit application is for:
☒ Proposed backflow prevention device ☐ An existing device
☐ An additional device on an existing permit (Enter existing permit number _____-WPC_____)
Number of devices to be covered by this permit _____

3/ Details of unapproved supply
Source of Unapproved Water: Borough of Rockaway water supply Well No. 1
Unapproved Water Used for: Supply to Borough of Rockaway Water Utility Treatment Plant
☒ Cross Connection Exists or ☐ Public Water & Unapproved Water Exist Within Same Building
If from Well(s): number of wells 1 Well Permit number (for each well) 4500348

4/ Details of public supply
Public Water Used for: ☐ Domestic, ☐ Fire Protection, ☐ Process Water, ☒ Other Vertical turbine pump seal water
Name of Public Community Water System Borough of Rockaway Water Utility
Public Water System ID number (PWSID) WSWWL0000070022
The Public Community Water Supplier hereby concurs with the proposed installation and the submission of this application ☒
Reviewed by: Borough of Rockaway Department of Public Works
Authorized representative: Joseph Rossi Title DPW Superintendent
Signature Joseph Rossi Date 10/29/10 Phone 973-627-7025
3:00-3:30 weekdays

5/ Name of Local Administrative Authority
☐ Board of Health, ☒ Plumbing Sub-Code Official, ☐ Exempt (Reason _____)

Name Robert Provencher Phone 973-627-2000

6/ Applicant's Signature
Signature Brian Quinn for USEPA Date 10/18/10
Brian Quinn, US EPA Region 2

INSTRUCTIONS - Complete both Page 1 of 2 and obtain the signature / approval of the Public Water System and mail to the Department at the above address & Owner of the Public Water System with:

- A **Drawing** showing; the facility layout, surrounding streets, location of unapproved water supply and Public Water Service Connections, location of meters and backflow preventer valve(s) & a schematic of sufficient detail to show the installation of each backflow preventer valve.
- A **Check** made payable to; **Treasurer State of New Jersey** in the amount of **$150.00** shall accompany the application to the Department.
- This Form shall be used to modify an existing Physical Connection Permit.

Physical Connection Permit Equivalency for: Borough of Rockaway Water Supply Well No. 1

Duplex Form do not reproduce on separate pages

Physical Connection Permit Number _____-WPC_____

List the Type, Size, Location of Public Water System Service Connections & Backflow Preventer Valve(s) that you are applying for:

	Service	Backflow Preventer	Location : Protected By-Pass / Detector Check
1.	☒ Domestic Size ☐ Fire inch 3/4	☐ D.C.V.A. Size ☒ R.P.Z. inch 3/4	At: Inside well house at Jackson St. & Odgen Ave. ☐ Protected By-Pass ____ Size ☐ Detector Check _____ Size
2.	☐ Domestic Size ☐ Fire inch ___	☐ D.C.V.A. Size ☐ R.P.Z. inch ____	At: ☐ Protected By-Pass ____ Size ☐ Detector Check _____ Size
3.	☐ Domestic Size ☐ Fire inch ___	☐ D.C.V.A. Size ☐ R.P.Z. inch ____	At: ☐ Protected By-Pass ____ Size ☐ Detector Check _____ Size
4.	☐ Domestic Size ☐ Fire inch ___	☐ D.C.V.A. Size ☐ R.P.Z. inch ____	At: ☐ Protected By-Pass ____ Size ☐ Detector Check _____ Size
5.	☐ Domestic Size ☐ Fire inch ___	☐ D.C.V.A. Size ☐ R.P.Z. inch ____	At: ☐ Protected By-Pass ____ Size ☐ Detector Check _____ Size
6.	☐ Domestic Size ☐ Fire inch ___	☐ D.C.V.A. Size ☐ R.P.Z. inch ____	At: ☐ Protected By-Pass ____ Size ☐ Detector Check _____ Size
7.	☐ Domestic Size ☐ Fire inch ___	☐ D.C.V.A. Size ☐ R.P.Z. inch ____	At: ☐ Protected By-Pass ____ Size ☐ Detector Check _____ Size
8.	☐ Domestic Size ☐ Fire inch ___	☐ D.C.V.A. Size ☐ R.P.Z. inch ____	At: ☐ Protected By-Pass ____ Size ☐ Detector Check _____ Size
9.	☐ Domestic Size ☐ Fire inch ___	☐ D.C.V.A. Size ☐ R.P.Z. inch ____	At: ☐ Protected By-Pass ____ Size ☐ Detector Check _____ Size
10.	☐ Domestic Size ☐ Fire inch ___	☐ D.C.V.A. Size ☐ R.P.Z. inch ____	At: ☐ Protected By-Pass ____ Size ☐ Detector Check _____ Size
11.	☐ Domestic Size ☐ Fire inch ___	☐ D.C.V.A. Size ☐ R.P.Z. inch ____	At: ☐ Protected By-Pass ____ Size ☐ Detector Check _____ Size
12.	☐ Domestic Size ☐ Fire inch ___	☐ D.C.V.A. Size ☐ R.P.Z. inch ____	At: ☐ Protected By-Pass ____ Size ☐ Detector Check _____ Size

If you are applying for more than 12 devices please copy this page, list the additional devices and include with you application.

Physical Connection Permit Equivalency for: Remediation system extraction wells

Physical Connection Permit Number _____-WPC_____

State of New Jersey
DEPARTMENT OF ENVIRONMENTAL PROTECTION
Division of Water Supply - Bureau of Water Systems and Well Permitting
401 East State Street – P.O. Box 426, Trenton, New Jersey 08625-0426

Application Form for Initial Physical Connection Permit

1/ Applicant Details

Applicant/Owner/Company Name United States Environmental Protection Agency
Permanent Legal Address 290 Broadway
City/Town New York State NY Zip Code 10007 -
Telephone (212) 637-4381 Fax Number (212) 637-4429 e-mail -
Contact Person Name Brian Quinn Title Remedial Project Manager

2/ Details of Facility

Name of Facility Borough of Rockaway East Main/Wall Street Plume Groundwater Treatment Facility
Address of Facility (Street/Road) Jackson Street and Odgen Avenue
Municipality Borough of Rockaway County Morris
Zip Code 07866 - _____ Block 14 Lot 18

This Initial Physical Connection Permit application is for:
☒ Proposed backflow prevention device ☐ An existing device
☐ An additional device on an existing permit (Enter existing permit number _____-WPC_____)
Number of devices to be covered by this permit _____

3/ Details of unapproved supply

Source of Unapproved Water: Remediation system extraction wells
Unapproved Water Used for: Extraction and treatment for environmental remediation
☐ Cross Connection Exists or ☒ Public Water & Unapproved Water Exist Within Same Building
If from Well(s): number of wells 5 Well Permit number (for each well) EW-6:2500067388
EW-5a, 8, 9, 10: TBD before installation

4/ Details of public supply

Public Water Used for: ☐ Domestic, ☐ Fire Protection, ☐ Process Water, ☒ Other Equipment Washdown/Cleaning
Name of Public Community Water System Borough of Rockaway Water Utility
Public Water System ID number (PWSID) WSWWL0000070022
The Public Community Water Supplier hereby concurs with the proposed installation and the submission of this application ☒
Reviewed by: Borough of Rockaway Department of Public Works
Authorized representative: Joseph Rossi Title DPW Superintendent
Signature Joseph Rossi Date 10/29/10 Phone 973-627-7025
3:00-3:30 weekdays

5/ Name of Local Administrative Authority

☐ Board of Health, ☒ Plumbing Sub-Code Official, ☐ Exempt (Reason _____)

Name Robert Provencher Phone 973-627-2000

6/ Applicant's Signature

Signature Brian Quinn for USEPA Date 11/2/10
Brian Quinn, US EPA Region 2

INSTRUCTIONS - Complete both Page 1 of 2 and obtain the signature / approval of the Public Water System and mail to the Department at the above address & Owner of the Public Water System with:

- A **Drawing** showing; the facility layout, surrounding streets, location of unapproved water supply and Public Water Service Connections, location of meters and backflow preventer valve(s) & a schematic of sufficient detail to show the installation of each backflow preventer valve.
- A **Check** made payable to; **Treasurer State of New Jersey** in the amount of **$150.00** shall accompany the application to the Department.
- This Form shall be used to modify an existing Physical Connection Permit.

Physical Connection Permit Equivalency for: Remediation system extraction wells

Duplex Form do not reproduce on separate pages

Physical Connection Permit Number _____-WPC_____

List the Type, Size, Location of Public Water System Service Connections & Backflow Preventer Valve(s) that you are applying for:

	Service	Backflow Preventer	Location :	Protected By-Pass / Detector Check
1.	☒ Domestic Size ☐ Fire inch 1	☐ D.C.V.A. Size ☒ R.P.Z. inch 1	At: Inside treatment facility at Jackson St. & Odgen Ave.	☐ Protected By-Pass ____ Size ☐ Detector Check _____ Size
2.	☐ Domestic Size ☐ Fire inch ___	☐ D.C.V.A. Size ☐ R.P.Z. inch ____	At:_____	☐ Protected By-Pass ____ Size ☐ Detector Check _____ Size
3.	☐ Domestic Size ☐ Fire inch ___	☐ D.C.V.A. Size ☐ R.P.Z. inch ____	At:_____	☐ Protected By-Pass ____ Size ☐ Detector Check _____ Size
4.	☐ Domestic Size ☐ Fire inch ___	☐ D.C.V.A. Size ☐ R.P.Z. inch ____	At:_____	☐ Protected By-Pass ____ Size ☐ Detector Check _____ Size
5.	☐ Domestic Size ☐ Fire inch ___	☐ D.C.V.A. Size ☐ R.P.Z. inch ____	At:_____	☐ Protected By-Pass ____ Size ☐ Detector Check _____ Size
6.	☐ Domestic Size ☐ Fire inch ___	☐ D.C.V.A. Size ☐ R.P.Z. inch ____	At:_____	☐ Protected By-Pass ____ Size ☐ Detector Check _____ Size
7.	☐ Domestic Size ☐ Fire inch ___	☐ D.C.V.A. Size ☐ R.P.Z. inch ____	At:_____	☐ Protected By-Pass ____ Size ☐ Detector Check _____ Size
8.	☐ Domestic Size ☐ Fire inch ___	☐ D.C.V.A. Size ☐ R.P.Z. inch ____	At:_____	☐ Protected By-Pass ____ Size ☐ Detector Check _____ Size
9.	☐ Domestic Size ☐ Fire inch ___	☐ D.C.V.A. Size ☐ R.P.Z. inch ____	At:_____	☐ Protected By-Pass ____ Size ☐ Detector Check _____ Size
10.	☐ Domestic Size ☐ Fire inch ___	☐ D.C.V.A. Size ☐ R.P.Z. inch ____	At:_____	☐ Protected By-Pass ____ Size ☐ Detector Check _____ Size
11.	☐ Domestic Size ☐ Fire inch ___	☐ D.C.V.A. Size ☐ R.P.Z. inch ____	At:_____	☐ Protected By-Pass ____ Size ☐ Detector Check _____ Size
12.	☐ Domestic Size ☐ Fire inch ___	☐ D.C.V.A. Size ☐ R.P.Z. inch ____	At:_____	☐ Protected By-Pass ____ Size ☐ Detector Check _____ Size

If you are applying for more than 12 devices please copy this page, list the additional devices and include with you application.

CERTIFICATION

I, Brian Quinn, am an authorized representative of the United States Environmental Agency (USEPA), owner "designee" of the Borough of Rockaway East Main/Wall Street Plume Groundwater Remediation System.

I certify that the proposed physical connection installations comply with the requirements set forth in N.J.A.C 7:10-10.

I certify that all information and statements in this certification form are true. I, Brian Quinn, of the USEPA, am certifying as Owner's Designated Site Representative.

Brian Quinn	10/18/10	Brian Quinn for USEPA
Name:	Date	Signature

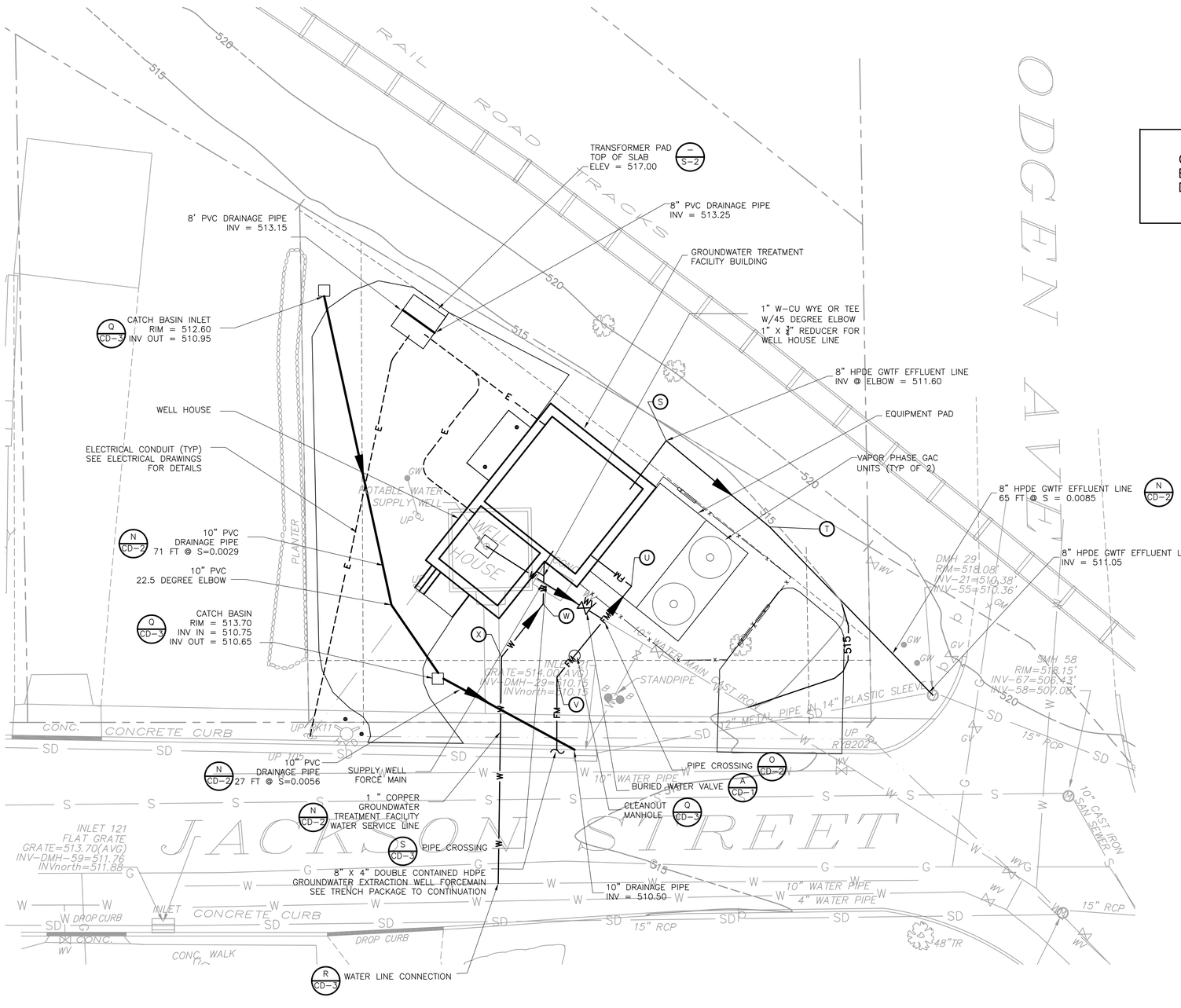

COORDINATE TABLE TO BE PROVIDED IN 100% DESIGN SUBMITTAL

NOTES

1. DRAWINGS ARE BASED ON SURVEY PREPARED BY STEWART SURVEYING & ENGINEERING LLC DATED AUGUST 2004 AND JULY 2005 AND LAN ASSOCIATES AUGUST 2007.

2. HORIZONTAL COORDINATE SYSTEM IS NEW JERSEY STATE PLANE NAD27. VERTICAL COORDINATE SYSTEM IS NGVD 1929.

3. INSTALL SEDIMENT CONTROL MEASURES IN WORK AREA BEFORE BEGINNING WORK IN ACCORDANCE WITH THE CONTRACTOR'S APPROVED SOIL EROSION AND SEDIMENT CONTROL PLAN AND MAINTAIN SEDIMENT CONTROL MEASURES AND DO NOT REMOVE UNTIL GROUND SURFACE IS RESTORED AND STABILIZED.

4. PRIOR TO COMMENCEMENT OF WORK CONTACT THE NEW JERSEY ONE-CALL SYSTEM TO LOCATE UTILITIES WITHIN THE WORK AREA.

5. TRAFFIC CONTROL SHALL BE POERFORMED IN ACCORDANCE WITH THE CONTRACTOR'S APPROVED TRAFFIC CONTROL PLAN.

6. PROTECT ALL UTILITIES AND SITE FEATURES DESIGNATED TO REMAIN DURING DCONSTRUCTION. PROMPTY REPAIR DAMAGE CAUSED BY CONSTRUCTION OPERATIONS AT NO COST TO THE GOVERNMENT.

7. CATCH BASINS AND MANHOLES SHALL BE DESIGNED FOR FLOTATION AND HYDROSTATIC FORCES IN ACCORDANCE WITH THE NEW JERSEY DEPARTMENT OF ENVIRONMENTAL PROTECTION FLOOD HAZARD AREA REQUIREMENT.

8. EXISTING BURIED GAS AND ELECTRIC UTILITIES ARE ASSUMED TO HAVE 2'± OF COVER, EXISTING WATER LINES ARE ASSUMED TO HAVE 4'± OF COVER. CONTRACTOR TO VERIFY LOCATION, DEPTH AND SIZE OF ALL BURIED UTILITIES PRIOR TO COMMENCING EXCAVATION.

9. HAND DIG WITHIN 3' OF UTILITIES.

10. THE LOCATION, TYPE AND SIZE OF UTILITIES SHOWN ON THE DRAWINGS IS TAKEN FROM INFORMATION GIVEN BY THE VARIOUS UTILITIES AND IS TO BE USED AS A GUIDE ONLY.

11. SUPPORT BURIED UTILITIES AT ALL UTILITY CROSSINGS.

12. THE CONTRACTOR SHALL FURNISH AND INSTALL PROTECTIVE COVERING/SECURE THE WORK AREA AS NECESSARY FOR TRENCHES THAT REMAIN OPEN OVERNIGHT.

13. THE CONTRACTOR SHALL PROTECT AND SUPPORT EXISTING UTILITIES DURING EXCAVATION. IF DAMAGE OCCURS TO AN EXISTING UTILITY LINE, THE UTILITY AUTHORITY SHALL BE NOTIFIED IMMEDIATELY. REPAIR TO DAMAGED WATER LINES WILL BE PERFORMED BY THE BOROUGH OF ROCKAWAY.

14. THE FORCE MAIN AND SUPPLY WELL MAIN SHALL MAINTAIN A HORIZONTAL SEPARATION OF 10 FEET FROM POTABLE WATER LINES. WHEN A 10 FOOT HORIZONTAL SEPARATION IS NOT POSSIBLE, THE FORCE MAIN/SUPPLY WELL MAIN SHALL BE INSTALLED 18 INCHES BELOW THE BOTTOM OF THE WATER MAIN OR SHALL BE ENCASED IN CONCRETE. IF 18 INCHES VERTICAL CLEARANCE IS NOT MAINTAINED BETWEEN THE FORCE MAIN AND WATER MAIN, THE FORCE MAIN/SUPPLY WELL MAIN SHALL BE ENCASED IN CONCRETE FOR AT LEAST 10 FEET ON EACH SIDE OF THE CROSSING. IN ADDITION, JOINTS SHALL BE INSTALLED AS FAR FROM THE WATER MAIN AS POSSIBLE.

15. FOR ALL UTILITY CROSSINGS OTHER THAN WATER MAINS, THE MINIMUM VERTICAL CLEARANCE BETWEEN THE FORCE MAIN AND EXISTING UTILITY SHALL BE 6 INCHES AND FLOWABLE FILL SHALL BE USED BETWEEN THE FORCE MAIN AND EXISTING UTILITY FOR STRUCTURAL SUPPORT.

16. TRENCH OPERATIONS WILL REQUIRE THE CONTRACTOR TO WORK IN PROXIMITY TO OVERHEAD ELECTRIC, TELEPHONE AND CABLE SERVICE AND MAIN LINES. THE CONTRACTOR SHALL COMPLY WITH THE REQUIREMENTS OF 1926.550(a)(15).

LEGEND

x	FENCE LINE	W	NEW WATER LINE
	POWER POLE	FM	NEW FORCE MAIN
	MONITORING WELL	E	UNDERGROUND ELECTRICAL CONDUIT
SD	STORM DRAIN LINE	514	PROPOSED INTERMEDIATE CONTOUR
G	GAS LINE	515	PROPOSED INDEX CONTOUR
OE	OVERHEAD ELECTRICAL LINE	WV	NEW WATER VALVE
SS	SANITARY SEWER LINE		MANHOLE
W	WATER LINE		BOLLARD
M	MANHOLE		CATCH BASIN
	CATCH BASIN	J	COORDINATE CALLOUT
	HYDRANT		
	TREE		
WV	WATER VALVE		
GV	GAS VALVE		
GW	GUY WIRE		
SEV	SEWER CLEANOUT		

1" = 10'
5 0 10

90% SUBMITTAL

KERSHU TAN
PROFESSIONAL ENGINEER
NJ LICENSE NO.
24GE04395200

REV. NO.	DATE	DRWN	CHKD	REMARKS

DESIGNED BY: E. GALLERIE
DRAWN BY: E. GALLERIE
SHEET CHK'D BY: M. POPPER
CROSS CHK'D BY: K. TAN
APPROVED BY:
DATE: SEPTEMBER 2010

PREPARED BY:
CDM Federal Programs Corporation
FOR:
CAPE Environmental Management, Inc.

US Army Corps of Engineers Kansas City District
GROUNDWATER TREATMENT FACILITY PACKAGE
ROCKAWAY BOROUGH SUPERFUND SITE
EAST MAIN/WALL STREET PLUME - OU2
ROCKAWAY BOROUGH, NEW JERSEY

PIPING PLAN

PROJECT #61090-6170-004
FILE NAME: CYPPL003
SHEET NO.
C-3

J:\56540\6170\CIVL\ CSTPL003 10/09/07 15:35 larsonej XREFS: RKAWYBDR, XSTPL001

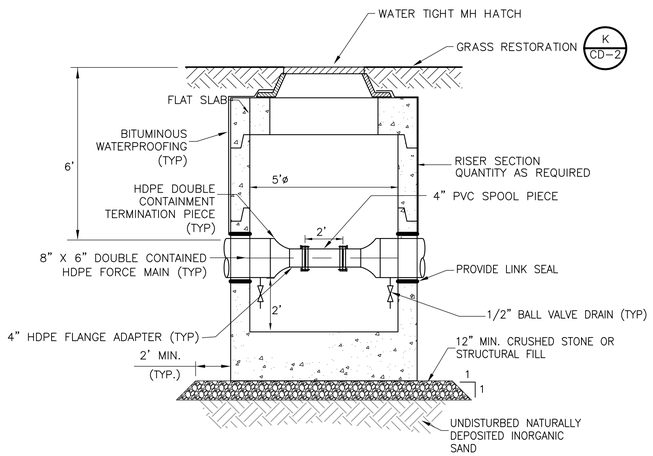

CLEANOUT MANHOLE

DETAIL P C-2,3
NTS

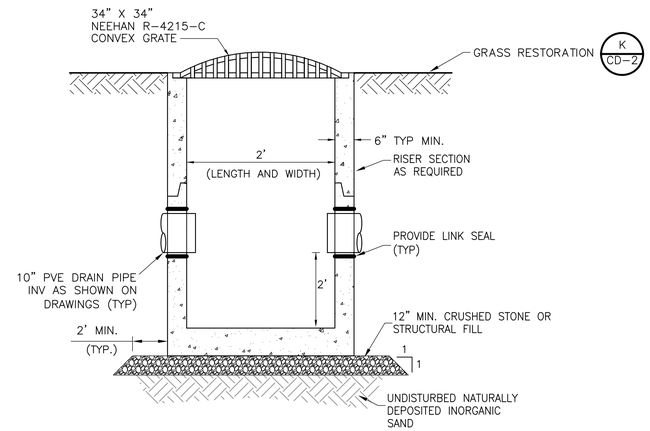

CATCH BASIN

DETAIL Q C-2,3
NTS

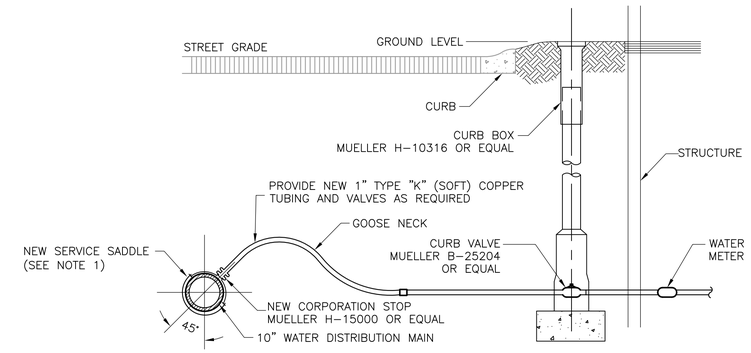

NOTES:
1. WATER MAIN MATERIAL IS UNKNOWN. CONTRACTOR SHALL DETERMINE PIPE MATERIAL AND CONFIRM SIZE. SERVICE SADDLE SHALL BE COMPATIBLE WITH EXISTING MAIN.

WATER MAIN CONNECTION

DETAIL R C-3

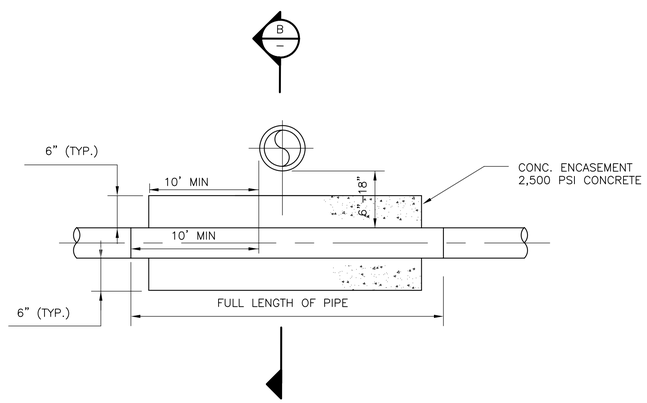

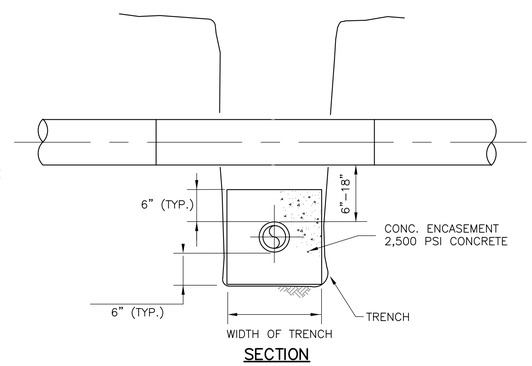

SECTION

PIPE CONCRETE ENCASEMENT

DETAIL S –
NTS

NOTES

1. POTABLE WATER MAINS SHALL BE ENCASED IN CONCRETE IF POTABLE WATER MAIN CROSSES UNDER GWTF INFLUENT MAIN OR WELL HOUSE WATER SUPPLY MAIN.

2. IF A 10 HORIZONTAL CLEARANCE CANNOT BE MAINTAINED, THE GWTF INFLUENT FORCE MAIN/ WELL HOUSE SUPPLY WELL MAIN SHALL BE INSTALLED 18 INCHES BELOW THE BOTTOM OF POTABLE WATER MAINS UNLESS OTHERWISE SPECIFIED OR SHALL BE ENCASED IN CONCRETE. IF 18 INCHES CLEARANCE IS NOT MAINTAINED BETWEEN THE FORCE MAIN/SUPPLY WELL MAIN AND WATER MAIN, THE FORCE MAIN SHALL BE ENCASED IN CONCRETE FOR AT LEAST 10 FEET ON EACH SIDE OF THE CROSSING. IN ADDITION, JOINTS SHALL BE INSTALLED AS FAR FROM THE WATER MAIN AS POSSIBLE.

90% SUBMITTAL

KERSHU TAN
PROFESSIONAL ENGINEER
NJ LICENSE NO.
24GE04395200

REV. NO.	DATE	DRWN	CHKD	REMARKS

DESIGNED BY: E. GALLERIE
DRAWN BY: E. GALLERIE
SHEET CHK'D BY: M. POPPER
CROSS CHK'D BY: K. TAN
APPROVED BY:
DATE: SEPTEMBER 2010

PREPARED BY:
CDM Federal Programs Corporation
FOR:
CAPE
CAPE Environmental Management, Inc.

US Army Corps of Engineers Kansas City District
GROUNDWATER TREATMENT FACILITY PACKAGE
ROCKAWAY BOROUGH SUPERFUND SITE
EAST MAIN/WALL STREET PLUME - OU2
ROCKAWAY BOROUGH, NEW JERSEY

CIVIL DETAILS III

PROJECT #61090-6170-004
FILE NAME:
SHEET NO.
CD-3

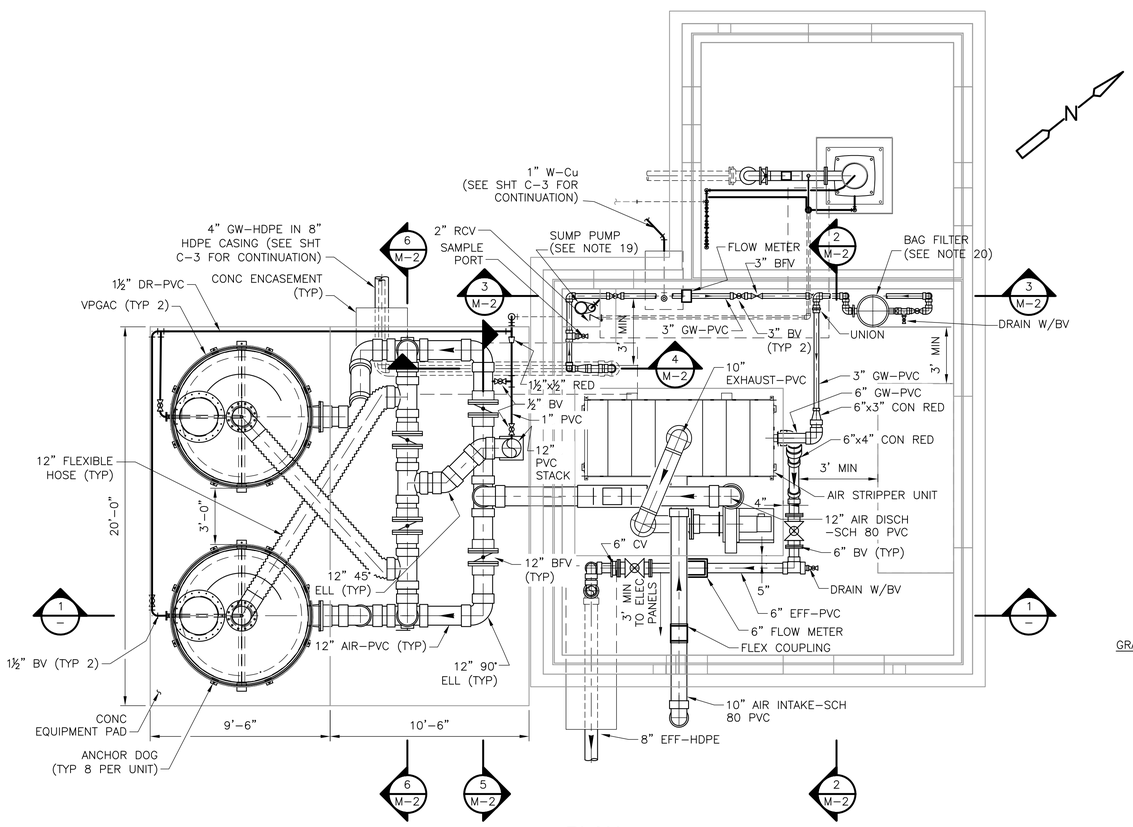

PLAN

1/4" = 1'-0"

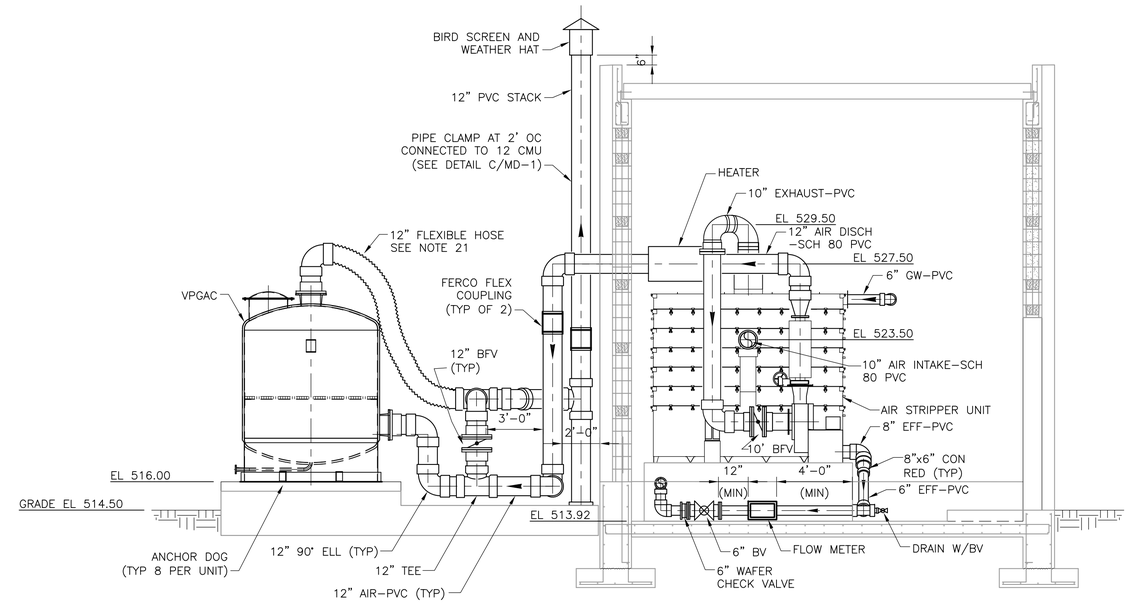

SECTION 1

1/4" = 1'-0"

MECHANICAL PIPING GENERAL NOTES:

1. PROCESS EQUIPMENT DIMENSIONS, LOCATIONS AND PIPING SYSTEM LAYOUTS ARE BASED ON EQUIPMENT SELECTED BY THE OWNER AND ENGINEER. IF THE CONTRACTOR PROPOSES TO FURNISH EQUIPMENT THAT REQUIRES AN ARRANGEMENT OR SPACE DIFFERING FROM THAT INDICATED ON THE DRAWINGS OR SPECIFIED, THE CONTRACTOR SHALL PREPARE AND SUBMIT TO THE ENGINEER FOR APPROVAL DETAILED ARCHITECTURAL, STRUCTURAL, MECHANICAL, PLUMBING, INSTRUMENTATION, HVAC AND ELECTRICAL DRAWINGS AND EQUIPMENT LISTS SHOWING ALL NECESSARY CHANGES AND EMBODYING ALL FEATURES OF THE EQUIPMENT AND/OR PROCESS SYSTEM HE PROPOSES TO FURNISH. THIS INFORMATION SHALL INCLUDE BUT NOT BE LIMITED TO PLANS, SECTIONS, DETAILS AND SCHEMATICS OF ALL APPURTENANCES REQUIRED. SUCH CHANGES, IF APPROVED BY THE ENGINEER, SHALL BE AT NO EXTRA COST TO THE OWNER. THE CONTRACTOR SHALL ASSUME THE COST OF, AND THE RESPONSIBILITY FOR, SATISFACTORILY ACCOMPLISHING ALL THE NECESSARY CHANGES CORRESPONDING TO THE DIMENSIONS AND CHARACTERISTICS OF THE EQUIPMENT SUBMITTED AND APPROVED BY THE ENGINEER.
2. EXTERIOR PIPING IS SHOWN ON SHEET C-3.
3. DIELECTRIC COUPLINGS, FLANGES OR UNIONS SHALL BE INSTALLED AT ALL CONNECTIONS OF COPPER PIPE TO OTHER TYPES OF METALLIC PIPING.
4. GENERALLY, SMALL PIPING IS SHOWN DIAGRAMMATICALLY. FIELD ROUTE SUBJECT TO THE APPROVAL OF THE ENGINEER TO AVOID INTERFERENCES. APPURTENANCES MAY NOT BE SHOWN ON THE DRAWINGS FOR THE SAKE OF CLARITY. THE CONTRACTOR SHALL FURNISH, INSTALL AND TEST ALL PIPING SYSTEMS AS INDICATED ON THE PROCESS FLOW SCHEMATICS, P&ID'S AND/OR AS DEFINED IN THE SPECIFICATIONS TO PROVIDE THE COMPLETE SYSTEM.
5. NOT ALL AND ONLY CERTAIN TYPES OF SUPPORTS ARE SHOWN ON THE MECHANICAL DRAWINGS.
6. ALL VALVES, EQUIPMENT, AND PIPING HAVING DRAIN OUTLETS SHALL BE PIPED TO THE FLOOR USING PVC PIPE OF APPROPRIATE DIAMETER AS INDICATED ON THE DRAWINGS OR AS RECOMMENDED BY THE EQUIPMENT MANUFACTURER. SMALL DRAIN PIPING IS NOT SHOWN ON THE DRAWINGS. AIR PURGE VALVES SHALL BE PIPED TO THE SUMP.
7. UNLESS OTHERWISE SHOWN, ALL PIPES UNDER CONCRETE SLABS SHALL BE ENCASED IN CONCRETE AS SHOWN ON THE STRUCTURAL DRAWINGS. PIPES SHALL BE PRESSURE TESTED BEFORE ENCASING.
8. NOT ALL VALVE AND GATE OPERATORS ARE SHOWN (i.e. HANDWHEELS, CRANKS, CHAINWHEELS, MOTORS OR LEVERS). OPERATORS SHALL BE LOCATED TO ALLOW CONVENIENT OPENING AND CLOSING OF VALVES OR GATES. ORIENTATION OF OPERATORS SHALL BE TO APPROVAL OF ENGINEER. NO VALVE SHALL BE INSTALLED WITH THE OPERATING STEM IN THE VERTICAL DOWNWARD POSITION.
9. PIPING SHALL BE INSTALLED SO THAT ANY PIPE, LAYER OF PIPING OR EQUIPMENT CAN BE REMOVED WITHOUT DISTURBING REMAINING PIPES AND SUPPORTS.
10. THE CONTRACTOR SHALL PROVIDE UNIONS OR DISMANTLING COUPLINGS WHETHER THEY ARE SHOWN ON THE DRAWINGS OR NOT ON ALL PIPELINES WITH WELDED, THREADED OR SOLVENT-CEMENTED JOINTS: AT ALL EQUIPMENT CONNECTIONS, AT A MINIMUM OF EVERY 50 FEET AND IN BRANCH LINES TO ALLOW CONVENIENT REMOVAL OF PIPING, EQUIPMENT AND APPURTENANCES.
11. THE CONTRACTOR SHALL BE RESPONSIBLE FOR FIELD LOCATING AND TAGGING ALL VALVES.
12. INSTRUMENTATION IS SHOWN ON PROCESS AND INSTRUMENTATION DRAWINGS (P&IDs). SEE P&IDs FOR ADDITIONAL NOTES AND DETAILS.
13. ALL REQUIRED SYSTEM PIPING, VALVES, EQUIPMENT AND APPURTENANCES MAY NOT BE SHOWN ON M DRAWINGS IN THEIR ENTIRETY. THOSE ITEMS, EXCEPT PIPE FITTINGS, UNIONS, BENDS, ETC, ARE SHOWN ON THE PROCESS FLOW DIAGRAM AND THE P&IDs. CONTRACTOR SHALL FURNISH, INSTALL AND TEST ALL SYSTEMS IN THE FIELD AS INDICATED IN THE P&ID, AS DEFINED IN THE CONTRACT, AND AS ACCEPTABLE TO THE ENGINEER, TO PROVIDE CONTINUOUS FLOW PATHS AND COMPLETE OPERATING SYSTEMS.
14. SLOPE ALL PIPING CONTINUOUSLY UP TO RELIEF POINTS AND DOWN TO DRAINS. AVOID LOCAL HIGHS AND LOWS.
15. IT SHALL BE THE CONTRACTOR'S RESPONSIBILITY TO FULLY COORDINATE ALL PROCESS PIPING AND EQUIPMENT WITH THAT OF ALL OTHER TRADES INCLUDING HVAC, PLUMBING, FIRE PROTECTION, ELECTRICAL AND CIVIL.
16. ALL PIPES GREATER THAN 8 FT FROM FINISHED FLOOR AND GREATER THAN 12" FROM WALLS SHALL BE SUPPORTED FROM THE BUILDING ROOF STRUCTURE.
17. ALL DI AND EXTERIOR PVC PIPING SHALL BE PAINTED PER THE SCHEDULE ON A-4.
18. SUMP PUMP SHALL BE ZOELLER MODEL N163 OR EQUAL. SUMP PUMP MANUFACTURER SHALL PROVIDE A NEMA 4X SIMPLEX CONTROL PANEL. PROVIDE 1 YEAR WARRENTY FROM TIME OF START UP.
19. BAG FILTER SHALL BE EATON BAG FILTRATION SYSTEM MODEL MBF-0302-CS10-030A-UT-13HE MULTIBAG FILTER HOUSING. PROVIDE CARBON STEEL HOUSING CAPABLE OF HOLDING 3 FILTER BAGS. PROVIDE SPRING ASSISTED COVER WITH SWING EYE-BOLT OR SEGMENT CLAMP CLOSURE MECHANCISM, O-RING SEALS, 3-INCH FLANGED INLET AND OUTLET CONNECTION, AND 1" VENT. ALLOWABLE FLOW UP TO 210 GPM AND PRESSURE UP TO 150 PSI. BAG FILTERS : EATON SENTINEL FILTER BAGS, , BAG SIZE 2, 25 MICRON, POLYPROPYLENE FELT, MODEL PO-25-P02E-WW-30. PROVIDE ONE YEAR WARRANTY FROM SYSTEM STARTUP.
20. FLEXIBLE HOSE SHALL BE TWO PLY POLYESTER, NEOPRENE COATED INDUSTRIAL HOSE, MANUFACTURED BY DURA-VENT, OR EQUIVALENT. THE HOSE SHALL BE ATTACHED TO THE PVC PIPING USING CAMLOCK QUICK-CONNECT FITTINGS.

90% SUBMITTAL

KERSHU TAN
PROFESSIONAL ENGINEER
NJ LICENSE NO.
24GE04395200

REV. NO.	DATE	DRWN	CHKD	REMARKS

DESIGNED BY: E. GALLERIE
DRAWN BY: J. ROBINSON
SHEET CHK'D BY: B. LUBENOW
CROSS CHK'D BY:
APPROVED BY:
DATE: SEPTEMBER 2010

PREPARED BY:
CDM Federal Programs Corporation
FOR:
CAPE
CAPE Environmental Management, Inc.

US Army Corps of Engineers Kansas City District
GROUNDWATER TREATMENT FACILITY PACKAGE
ROCKAWAY BOROUGH SUPERFUND SITE
EAST MAIN/WALL STREET PLUME - OU2
ROCKAWAY BOROUGH, NEW JERSEY

GROUNDWATER TREATMENT FACILITY
PLAN AND SECTION

PROJECT #61090-6170-004
FILE NAME: M001TFPL

SHEET NO.
M-1

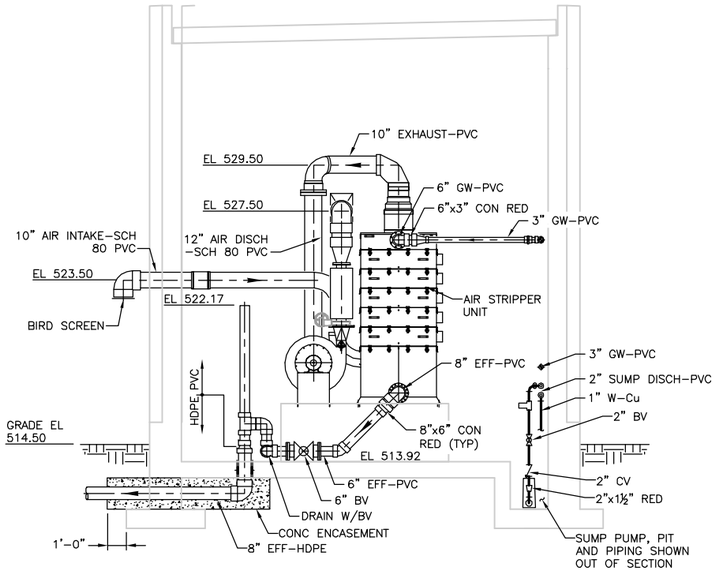

SECTION 2 (M-1)
1/4" = 1'-0"

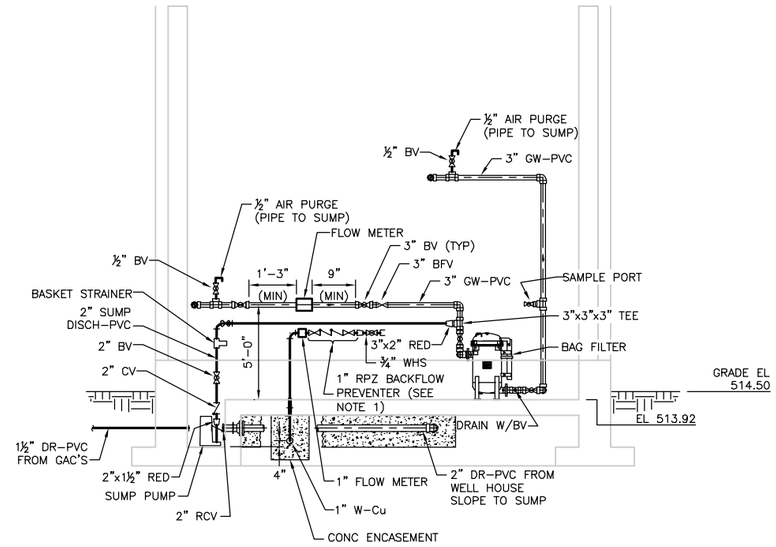

SECTION 3 (M-1)
1/4" = 1'-0"

NOTES:
1. RPZ BACKFLOW PREVENTER SHALL BE 1" WATTS SERIES 919 OR APPROVED EQUAL.

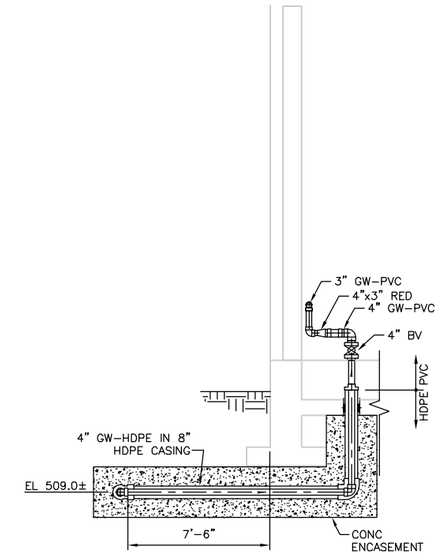

SECTION 4 (M-1)
1/4" = 1'-0"

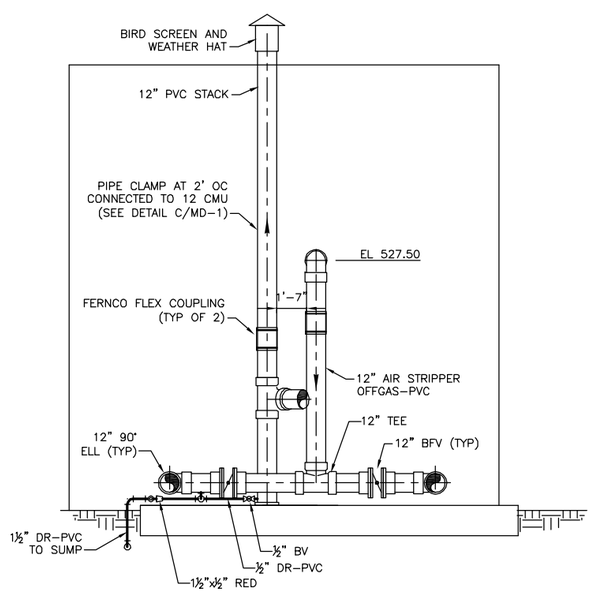

SECTION 5 (M-1)
1/4" = 1'-0"

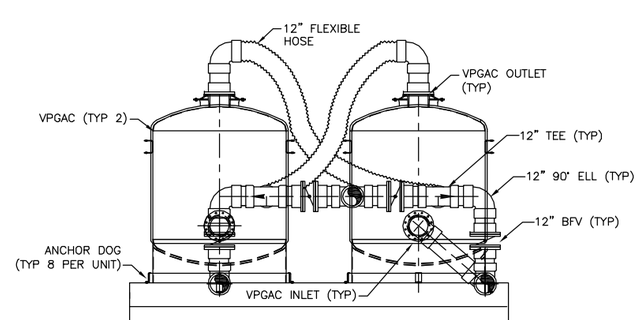

SECTION 6 (M-1)
1/4" = 1'-0"

90% SUBMITTAL

KERSHU TAN
PROFESSIONAL ENGINEER
NJ LICENSE NO.
24GE04395200

REV. NO.	DATE	DRWN	CHKD	REMARKS

DESIGNED BY: E. GALLERIE
DRAWN BY: J. ROBINSON
SHEET CHK'D BY: B. LUBENOW
CROSS CHK'D BY:
APPROVED BY:
DATE: SEPTEMBER 2010

PREPARED BY:
CDM Federal Programs Corporation
FOR:
CAPE
CAPE Environmental Management, Inc.

US Army Corps of Engineers Kansas City District
GROUNDWATER TREATMENT FACILITY PACKAGE
ROCKAWAY BOROUGH SUPERFUND SITE
EAST MAIN/WALL STREET PLUME - OU2
ROCKAWAY BOROUGH, NEW JERSEY

GROUNDWATER TREATMENT FACILITY
SECTIONS

PROJECT #61090-6170-004
FILE NAME: M002TFSC
SHEET NO.
M-2

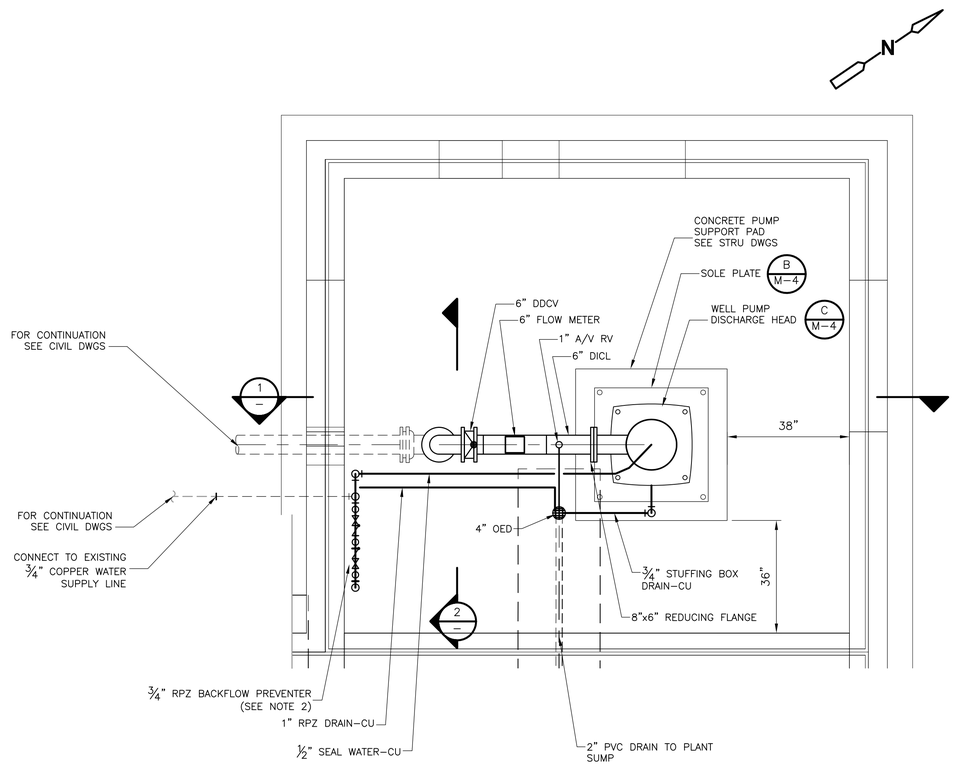

ENLARGED WELL HOUSE

PLAN

1/2" = 1'-0"

NOTES:
1. CONTRACTOR SHALL CONFIRM DIMENSIONS OF ALL EXISTING EQUIPMENT, STRUCTURES, AND PIPING PRIOR TO CONSTRUCTION.
2. RPZ BACKFLOW PREVENTER SHALL BE ¾" WATTS SERIES 919 OR APPROVED EQUAL.

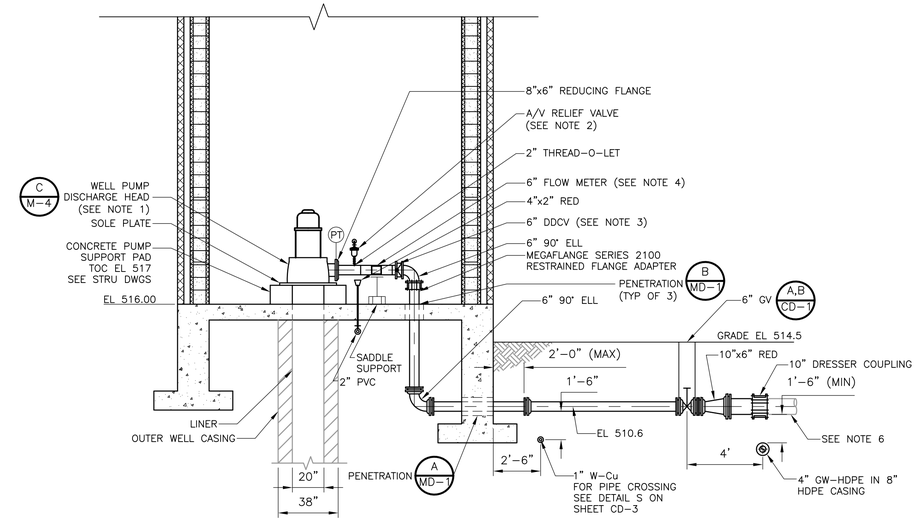

SECTION 1 (1/4" = 1'-0")

NOTES:
1. CONTRACTOR SHALL PROTECT AND EVALUATE CONDITION OF EXISTING PUMP HEAD, COLUMN, SHAFT, BOWLS AND APPURTENANCES AND REUSE WHERE POSSIBLE. IF A NEW PUMP IS REQUIRED, PUMP SHALL BE CURRENT MODEL VERTICAL CENTRIFUGAL PUMP EQUAL TO LAYNE MODEL TF825 WITH DESIGN CONDITION OF 500GPM AT 160FT TDH.
2. A/V RELIEF VALVE SHALL BE BY APCO 142DAT OR APPROVED EQUAL.
3. CHECK VALVE BE 6-INCH CRANE MODEL DUO-CHEK II STYLE G OR APPROVED EQUAL.
4. FLOW METER SHALL BE 6-INCH MCCROMETER MCSPACESAVER MO300F WITH FS100 FLOW STRAIGHTENER OR APPROVED EQUAL. PROVIDE MINIMUM 1.5 PIPE DIAMETERS FROM THREAD-O-LET TO PROPELLER TIP AND MINIMUM 1 PIPE DIAMETER FROM METER SADDLE TO CHECK VALVE.
5. BURIED DIP JOINTS SHALL BE RESTRAINED PUSH-ON TYPE JOINTS PER SPECIFICATION SECTION 02616.
6. CONTRACTOR SHALL EXPOSE EXISTING FORCE MAIN, DETERMINE ELEVATION OF CONNECTION, AND ADJUST ELEVATION/SLOPE OF NEW FORCE MAIN TO ALIGN PROPERLY AT THE CONNECTION POINT. TOP OF PIPE SHALL BE 42-IN MINIMUM BELOW GRADE.
7. DISCHARGE PIPING SHALL BE CEMENT-LINED DUCTILE IRON.

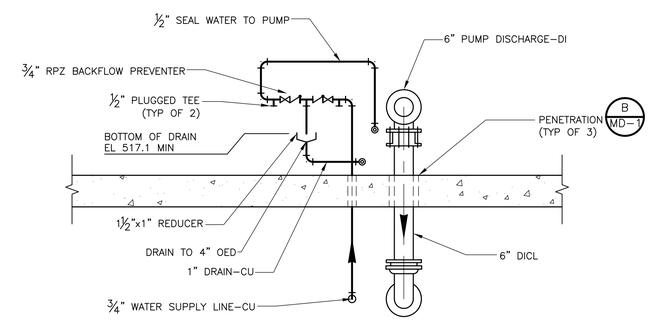

SECTION 2 (1/2" = 1'-0")

1/4" = 1'- 0"
2 1 0 2 4

1/2" = 1'-0"
1 0 1 2

90% SUBMITTAL

KERSHU TAN
PROFESSIONAL ENGINEER
NJ LICENSE NO.
24GE04395200

REV. NO.	DATE	DRWN	CHKD	REMARKS

DESIGNED BY:
DRAWN BY:
SHEET CHK'D BY:
CROSS CHK'D BY:
APPROVED BY:
DATE: SEPTEMBER 2010

PREPARED BY:
CDM Federal Programs Corporation
FOR:
CAPE
CAPE Environmental Management, Inc.

US Army Corps of Engineers Kansas City District
GROUNDWATER TREATMENT FACILITY PACKAGE
ROCKAWAY BOROUGH SUPERFUND SITE
EAST MAIN/WALL STREET PLUME - OU2
ROCKAWAY BOROUGH, NEW JERSEY

WELL HOUSE PLAN AND SECTIONS

PROJECT #61090-6170-004
FILE NAME:
SHEET NO.
M-3

C:\cdmxm\larsonej\d0291076\ M003WHPL 09/10/10 16:34 Larsonej XREFS: RKAWYBDR, MTBWP001, STFBS000, MTBWS001

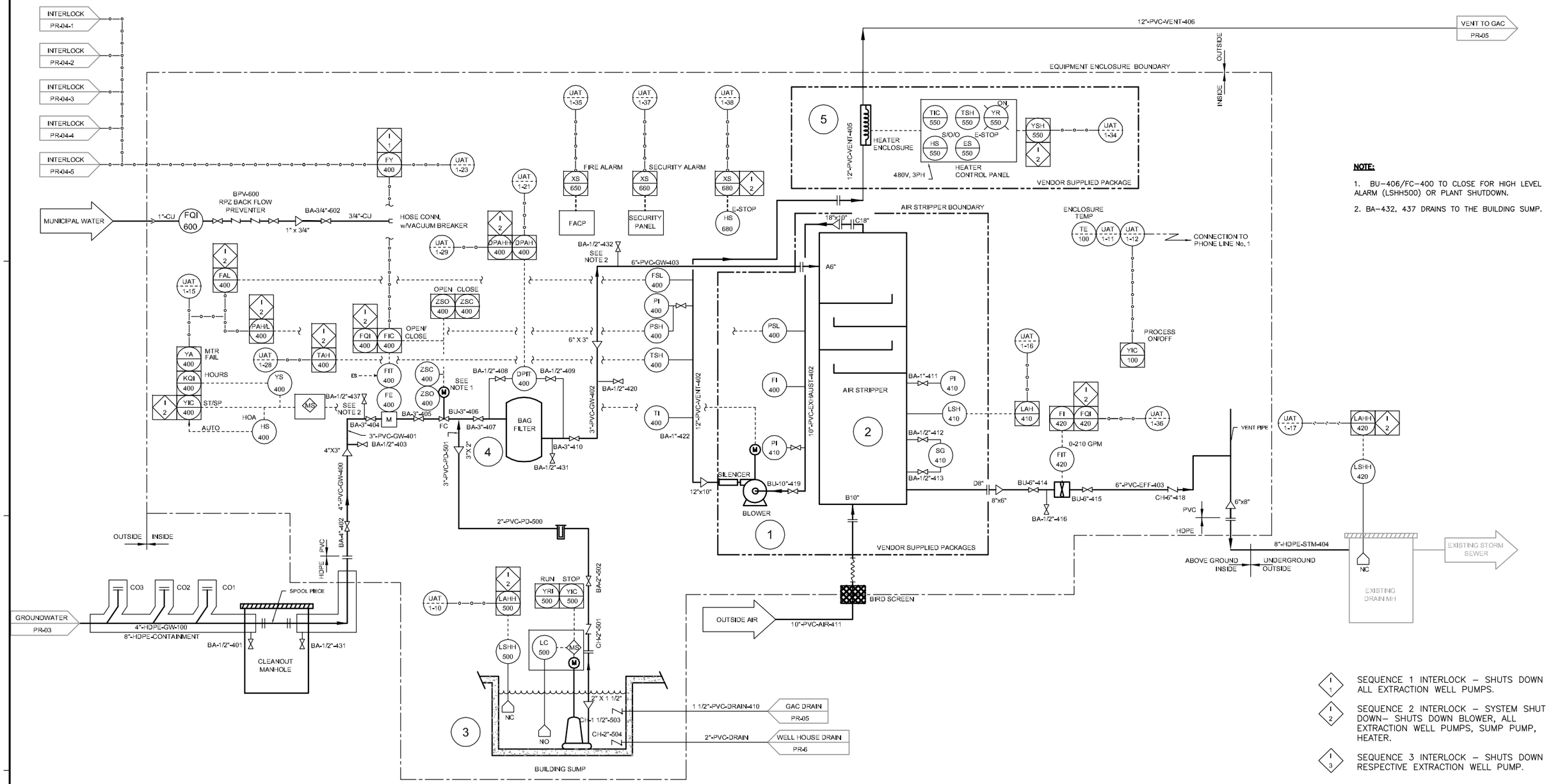

NOTE:

1. BU-406/FC-400 TO CLOSE FOR HIGH LEVEL ALARM (LSHH500) OR PLANT SHUTDOWN.
2. BA-432, 437 DRAINS TO THE BUILDING SUMP.

SEQUENCE 1 INTERLOCK – SHUTS DOWN ALL EXTRACTION WELL PUMPS.

SEQUENCE 2 INTERLOCK – SYSTEM SHUT DOWN– SHUTS DOWN BLOWER, ALL EXTRACTION WELL PUMPS, SUMP PUMP, HEATER.

SEQUENCE 3 INTERLOCK – SHUTS DOWN RESPECTIVE EXTRACTION WELL PUMP.

PLANT ID.	BLR-400 (1)	AST-400 (2)	PMP-500 (3)	BF-400 (4)	HEATER-400 (5)	(6)	(7)	(8)	(9)	(10)	(11)	(12)	(13)	(14)	(15)	(16)	(17)	(18)	(19)	(20)
NAME	AIR BLOWER	AIR STRIPPER	SUMP PUMP	BAG FILTER	HEATER															
DESCRIPTION: MATERIAL	CS	304 SST	CI	SS																
SIZE	-	-	1 1/2" DISCH	-																
CAPACITY	2100CFM @ 55"WC	210 GPM	30 GPM @ 52 TDH	230 GPM (MAX)																
TEMP	120°F	+14-140°F	130°F (MAX)	250°F (MAX)																
HP/V/RPM	40/480/3550	-	0.5/115/3450	-																
WEIGHT	400 LB	11,820 LBS	~80 LBS	245 LBS																
MANUFACTURE	N.Y. BLOWER	CARBONAIR	ZOELLER	HAYWARD																
MODEL	#2610A	STAT400-4	MODEL N163	MBF-0302																
VENDOR	CARBONAIR	CARBONAIR	ZOELLER	-																

90% SUBMITTAL

J. W. SPITZER
PROFESSIONAL ENGINEER
NJ LICENSE NO.
24GE04508900

REV. NO.	DATE	DRWN	CHKD	REMARKS

DESIGNED BY: S. GARG
DRAWN BY: S. GARG
SHEET CHK'D BY: J. SPITZER
CROSS CHK'D BY: E. GALLERIE
APPROVED BY: J. SPITZER
DATE: SEPTEMBER 2010

PREPARED BY:
CDM Federal Programs Corporation
FOR:
CAPE
CAPE Environmental Management, Inc.

US Army Corps of Engineers Kansas City District
GROUNDWATER TREATMENT FACILITY PACKAGE
ROCKAWAY BOROUGH SUPERFUND SITE
EAST MAIN/WALL STREET PLUME - OU2
ROCKAWAY BOROUGH, NEW JERSEY

PROCESS & INSTRUMENTATION DIAGRAM
AIR STRIPPER

PROJECT #61090-6170-004
FILE NAME: ISTPI004

SHEET NO.
PR-04

RECEIVED
MAY 31 2011
CAMP, DRESSER & McKEE
EDISON, NEW JERSEY

State of New Jersey

CHRIS CHRISTIE
GOVERNOR

KIM GUADAGNO
LT. GOVERNOR

DEPARTMENT OF ENVIRONMENTAL PROTECTION
Mail Code 401-03
Division of Water Supply - Water Supply Permitting Element
Bureau of Water Systems and Well Permitting
401 E. State Street - P.O. Box 420
Trenton, New Jersey 08625-0420
Tel #: (609) 984-6831 - Fax #: (609) 633-1495
http://www.state.nj.us/dep/watersupply/

BOB MARTIN
Commissioner

May 20, 2011

Rockaway Borough Water Department
1 East Main Street, Municipal Building
Rockaway, NJ 07866

Dear Water Purveyor:

Enclosed is a construction permit dated May 12, 2011 issued to you pursuant to the New Jersey Safe Drinking Water Act, N.J.S.A. 58:12A, and in consideration of your application dated October 29, 2010 and signed by Joseph Rossi, Superintendent.

Your permit is for:

- Demolition of the existing well house for Well # 1 and construction of a new dual purpose utility building to accommodate Well # 1 with modifications to the wellhead discharge manifold; located in Rockaway Borough; (Jackson Avenue, Block # 14, Lot # 24), County of Morris, New Jersey; and
- The distribution of water for potable purposes from said works.

Your attention is directed to both the **specific and general** conditions of the aforementioned permit. Enclosed with this permit is the Construction Completion Certification (CCC). The CCC **must** be submitted as required by the Submittal Action Requirements in the attached permit conditions. If the facility is not completed within the specified time allotment, an "Extension of Time" shall be requested at least ninety (90) days prior to the permit expiration date to allow for review and approval. No extension of time will be granted to an expired permit. Should you have any questions about this permit, please contact Syed Rizvi at (609) 984-6831. When contacting the Department regarding this permit, please reference the Permit No. and PWSID No. provided herein.

Sincerely,

John F. Fields, Acting Chief
Bureau of Water Systems and Well Permitting

PWSID NO.: NJ1434001
WCP100001
Enclosures
cc: Kershu Tan, CDM
Mayor and Council of Rockaway Borough
Northern Bureau of Water Compliance and Enforcement
Syed Rizvi, BWSWP

NJEMS\sd_const_pemit_040111

State of New Jersey

CHRIS CHRISTIE
GOVERNOR

KIM GUADAGNO
LT. GOVERNOR

DEPARTMENT OF ENVIRONMENTAL PROTECTION

BOB MARTIN
Commissioner

Mail Code 401-03
Division of Water Supply - Water Supply Permitting Element
Bureau of Water Systems and Well Permitting
401 E. State Street - P.O. Box 420
Trenton, New Jersey 08625-0420
Tel #: (609) 984-6831 - Fax #: (609) 633-1495
http://www.state.nj.us/dep/watersupply/

PERMIT*

The New Jersey Department of Environmental Protection grants this permit in accordance with your application, attachments accompanying same application, and applicable laws and regulations. This permit is also subject to further conditions and stipulations enumerated in the supporting documents which are agreed to by the permittee upon acceptance of the permit.

Permit No. WCP100001 **PWSID No.** 1434001	**Issuance Date** May 20, 2011	**Effective Date** Issuance Date	**Expiration Date** See General Condition No. 18
Name and Address of Applicant Rockaway Borough Water Department 1 East Main Street, Municipal Bldg Rockaway, NJ 07866		**Location of Activity/Facility:** Jackson Avenue Block # 14, Lot # 24 Rockaway Borough, Morris County	
		Type of Permit Potable Water Supply	**Statute(s):** N.J.S.A. 58:12A-1.1 et seq.

This permit grants permission to:

1. Demolish the existing well house for Well # 1 and construct a new dual purpose utility building to accommodate Well # 1 with modifications to the wellhead discharge manifold;

2. Operate the facilities approved by this permit and distribute water for potable purposes from said works.

According to an Engineer's Report entitled:

	Date	Prepared By
Well Head Modifications at Well No. 1 Borough of Rockaway, Morris County	11/01/2010	CDM

According to Plans entitled:

	Date	Prepared By
Groundwater Treatment Facility Rockaway Borough Superfund Site	09/01/2010	CDM

According to Specifications entitled:

	Date	Prepared By
Groundwater Treatment Facility Rockaway Borough Superfund Site	11/01/2010	CDM

Additional information dated: 05/05/2011

This permit is subject to <u>specific and general conditions</u> contained in the following page(s):

Continued on Requirements Page -- 1 of 2

Approved by the authority of:

Bob Martin
Commissioner
Department of Environmental Protection

John F. Fields, Acting Chief

The word permit means approval, certification, registration, etc.

Permit Requirements

Submittal/Action Requirements

Applicable Subject Items	Submittal/Action Type	Requirement
4500000348, WELL 1 (WSWL70022)	Completed construction certification report	Within thirty days of completion of the approved facilities the permittee/engineer shall notify the Department of the completion date and certify that the facilities were constructed in accordance with the approved plans and specifications by returning the enclosed Construction Completion Certification. Submission shall be no later than 30 days after expiry of permit. [N.J.A.C. 7:10-11]

Text Requirements

All Phases

4500000348, WELL 1 (WSWL70022)

1. TREATMENT PLANT SPECIFIC CONDITIONS.
2. The permittee is advised that there shall be no openings and/or penetrations through the common wall between the well house and the groundwater treatment building. [N.J.A.C. 7:10-11]
3. This permit is only for the modifications to Well # 1 and associated well house. This permit does not include the remediation treatment equipment. The groundwater remediation treatment has not been examined nor efficiency of remediation treatment evaluated. [N.J.A.C. 7:10-11]
4. All groundwater remediation piping shall be provided with the inscription "Non Potable Water" to protect against cross connection of potable water supply piping. Force main and water main crossings shall be in accordance with sewer and water main crossing regulations as specified in N.J.A.C. 7:10-11.10(e). [N.J.A.C. 7:10-11]
5. The permittee is advised that compliance with all regulations related to water treatment and water quality must be maintained at all times during the construction of the approved facility. [N.J.A.C. 7:10-11]
6. The permittee is advised that during demolition and construction of the building and during operation of Well # 1 with temporary pump, the wellhead shall be protected at all times by installing a secured temporary discharge manifold protected by a backflow protection device. [N.J.A.C. 7:10-11]
7. The potable water supply line to the treatment building shall be provided with a Reduced Pressure Zone (RPZ) backflow prevention device. This permit does not constitute approval of the backflow prevention device. A separate approval for the Physical Connection Permit from the Bureau of Water Systems and Well Permitting is required. [N.J.A.C. 7:10-11]
8. PERMIT GENERAL CONDITIONS.
9. The permit is revocable, or subject to modification or change, at any time, when in the judgment of the New Jersey Department of Environmental Protection such revocation, modification or change shall be necessary. [N.J.A.C. 7:10-11]
10. The issuance of this permit shall not be deemed to affect in any way action by the New Jersey Department of Environmental Protection on any future application. [N.J.A.C. 7:10-11]
11. The works, facilities and/or activities shown by plans and/or other engineering data, which are this day approved, subject to the conditions herewith established, shall be constructed and/or executed in conformity with such plans and/or engineering data and said conditions. [N.J.A.C. 7:10-11]
12. No change in plans or specifications shall be made without prior written permission from the New Jersey Department of Environmental Protection. [N.J.A.C. 7:10-11]
13. The granting of this permit shall not be construed in any way to affect the title or ownership of property, and shall not make the New Jersey Department of Environmental Protection or the State a party in any suit or question of ownership of property. [N.J.A.C. 7:10-11]

Text Requirements

All Phases

4500000348, WELL 1 (WSWL70022)

14. This permit does not waive the obtaining of Federal or other State or Local Government consent when necessary. This permit is not valid and no work shall be undertaken until such time as all other required approvals and permits have been obtained. [N.J.A.C. 7:10-11]
15. A copy of this permit shall be kept at the work site, and shall be exhibited upon the request of Department personnel. [N.J.A.C. 7:10-11]
16. In the examination of plans and/or other engineering data, the New Jersey Department of Environmental Protection does not examine the structural features of the design, such as thickness of concrete or its reinforcement, the efficiency of any electrical or mechanical equipment or apparatus, and the approval herewith given does not include these features. [N.J.A.C. 7:10-11]
17. Water distribution by said works shall at all times meet the applicable standards for quality. Additional units for the derivation, treatment and for distribution of the water shall be established if and when required by the New Jersey Department of Environmental Protection. [N.J.A.C. 7:10-11]
18. For this permit to remain valid, the facilities approved in this permit shall be constructed and placed into service within five years from the effective date of the permit. [N.J.A.C. 7:10-11]
19. The operations of the public water facility shall be under the supervision of an operator or operators who shall possess a valid license or licenses issued by the New Jersey Department of Environmental Protection, pursuant to the provisions of the Water Supply and Wastewater Operators' Licensing Act, N.J.S.A. 58:11-64 et seq. [N.J.A.C. 7:10-11]
20. The minimum required licensing classifications shall be W-2 & T-2 or equivalent and in accordance with the Licensing of Water Supply and Wastewater Treatment System Operators, N.J.A.C. 7:10A-1.1 et seq., and the supplements thereof and amended thereto. [N.J.A.C. 7:10-11]
21. The public water facilities shall be operated in such a manner as to optimize the use of all available sources of water in order to achieve and maintain compliance with Water Diversion Permit # 5144. [N.J.A.C. 7:10-11]

State of New Jersey

CHRIS CHRISTIE
GOVERNOR

KIM GUADAGNO
LT. GOVERNOR

DEPARTMENT OF ENVIRONMENTAL PROTECTION
Mail Code 401-03
Division of Water Supply - Water Supply Permitting Element
Bureau of Water Systems and Well Permitting
401 E. State Street - P.O. Box 420
Trenton, New Jersey 08625-0420
Tel #: (609) 984-6831 - Fax #: (609) 633-1495
http://www.state.nj.us/dep/watersupply/

BOB MARTIN
Commissioner

CONSTRUCTION COMPLETION CERTIFICATION

Attention: Bureau of Water Systems and Well Permitting
Water Systems Construction Permit Section

PERMIT NO.: WCP100001 **ISSUANCE DATE:** May 20, 2011

I (We) hereby certify that the following has been built and placed into service* and was completed in accordance with the approved plans, specifications, and other supporting information.

APPLICANT: Rockaway Borough Water Department

PWSID: NJ1434001

PROJECT DESCRIPTION: Demolition of the existing well house for Well # 1 and construction of a new dual purpose utility building to accommodate Well # 1 with modifications to the wellhead discharge manifold.

MUNICIPALITY: Rockaway Borough

COUNTY: Morris

COMPLETION DATE: _____

DATE FACILITIES WERE PLACED INTO SERVICE *: _____

_____
Signature of Engineer & Embossed Seal

_____
Name of Engineer / New Jersey License Number

_____
Date

* Placed into service means that the water mains or other permitted infrastructure changes are actually delivering water to all consumers approved by the permit, except to the extent that the remaining number of realty improvements not being served is below the threshold for needing a permit, i.e. less than 30 realty improvements or 12,000 GPD of non-residential demand.

State of New Jersey

CHRIS CHRISTIE
GOVERNOR

KIM GUADAGNO
LT. GOVERNOR

DEPARTMENT OF ENVIRONMENTAL PROTECTION
Mail Code 401-03
Division of Water Supply - Water Supply Permitting Element
Bureau of Water Systems and Well Permitting
401 E. State Street - P.O. Box 420
Trenton, New Jersey 08625-0420
Tel #: (609) 984-6831 - Fax #: (609) 633-1495
http://www.state.nj.us/dep/watersupply/

BOB MARTIN
Commissioner

CONSTRUCTION COMPLETION CERTIFICATION

Attention: Bureau of Water Systems and Well Permitting
Water Systems Construction Permit Section

PERMIT NO.: WCP100001 **ISSUANCE DATE:** May 20, 2011

I (We) hereby certify that the following has been built and placed into service* and was completed in accordance with the approved plans, specifications, and other supporting information.

APPLICANT: Rockaway Borough Water Department

PWSID: NJ1434001

PROJECT DESCRIPTION: Demolition of the existing well house for Well # 1 and construction of a new dual purpose utility building to accommodate Well # 1 with modifications to the wellhead discharge manifold.

MUNICIPALITY: Rockaway Borough

COUNTY: Morris

COMPLETION DATE: November 7, 2011

DATE FACILITIES WERE PLACED INTO SERVICE *: November 14, 2011

Kershu Tan
Signature of Engineer & Embossed Seal

KERSHU TAN / PAGE 43952
Name of Engineer / New Jersey License Number

Jan. 18, 2012
Date

* Placed into service means that the water mains or other permitted infrastructure changes are actually delivering water to all consumers approved by the permit, except to the extent that the remaining number of realty improvements not being served is below the threshold for needing a permit, i.e. less than 30 realty improvements or 12,000 GPD of non-residential demand.

State of New Jersey

DEPARTMENT OF ENVIRONMENTAL PROTECTION

CHRIS CHRISTIE
Governor

KIM GUADAGNO
Lt. Governor

Municipal Finance and Construction Element
Division of Water Quality
P.O. Box 420
Mail Code 401-03D
Trenton, New Jersey 08625
Fax: (609) 633-8165
www.state.nj.us/dep/dwq

BOB MARTIN
Commissioner

USEPA Region 2
290 Broadway
New York, NY 10001

June 21, 2011

Re: Treatment Works Approval No. 11-0172
Rockaway Borough Wellfield Superfund Site, East Main/Wall Street Plume – OU2
Rockaway Borough, Morris County

Gentlemen:

There is enclosed a Treatment Works Approval issued to you pursuant to Title 58 of the Revised Statutes of New Jersey and in consideration of your application received on 03/27/2011 signed by Brian Quinn, Remedial Project Manager, and Kershu Tan, P.E.

This approval is valid for a period of two (2) years from the issuance date, unless otherwise stated in the attached approval document. This approval shall expire unless building, installing or modifying of the treatment works has begun within the initial approval period. Treatment works approvals may be extended beyond the original two year approval date, to a maximum period of five years from the original issuance date, in accordance with the terms and conditions contained in N.J.A.C. 7:14A-22.12. A time extension request must be received by the Department prior to the permit's expiration date. Time extension requests shall be submitted to the Bureau of Construction Management & TWA/CSO Permitting at the address noted in the heading of this letter.

If you have any questions regarding the permit, please contact me by calling (609) 984-4429.

Sincerely,

Nicholas Horiates
Environmental Specialist 4
Bureau of Construction Management & TWA/CSO Permitting

11-0172
Enclosure
cc: Camp Dresser & McKee
Borough of Rockaway

New Jersey is an Equal Opportunity Employer • Printed on Recycled Paper and Recyclable

STATE OF NEW JERSEY
DEPARTMENT OF ENVIRONMENTAL PROTECTION
P.O. Box 402, TRENTON, NJ 08625-0402

PERMIT TO CONSTRUCT AND OPERATE* TREATMENT WORKS

**Local Agency approval required prior to operation*

The New Jersey Department of Environmental Protection grants this approval in accordance with your application, attachments accompanying same application, and applicable laws and regulation.

PERMIT NO.	ISSUANCE DATE	EXPIRATION DATE	DESIGN FLOW
11-0172	06/21/2011	06/20/2013	.3024 M.G.D.

NAME AND ADDRESS OF APPLICANT
USEPA Region 2
290 Broadway
New York NY 10001

LOCATION OF ACTIVITY
Rockaway Boro
Morris County

This permit grants permission to:
Construct and operate a sediment bag filter and an air stripper (total rated capacity @ 210 GPM) for groundwater remediation at the Rockaway Borough Wellfield Superfund Site - East Main/Wall Street Plume OU2, located at Jackson Avenue and Ogden Avenue, Lot 14, Block 18, in the Borough of Rockaway, Morris County.

According to the plans entitled:
"Groundwater Treatment Facility Package, Rockaway Borough Superfund Site, East Main/Wall Street Plume - OU2, Rockaway Borough, New Jersey, 100% Design", prepared by CDM Federal Programs Corp, dated November 2010, unrevised, sheets G-1, G-2, C-1 through C-3, CD-1 through CD-3, SD-1, SD-2, M-1 through M-4, MD-1, and PR-01 through PR-06.

and according to the specifications entitled:
"U.S. Army Corps of Engineers, Kansas City District, Groundwater Treatment Facility, Rockaway Borough Superfund Site, East Main / Wall Street Plume - OU2, Rockaway Borough, New Jersey", signed and sealed by Kershu Tan, P.E., dated November 2010.

APPROVED by the Department of Environmental Protection

Nicholas Horiates
Environmental Specialist 4

Gautam R. Patel, Chief
Bureau of Construction Management & TWA/CSO Permitting

This permit is also subject to special provisos and general conditions stipulated on the attached page(s) which are agreed to by the permittee upon acceptance of the permit.

PART I

PROVISOS

A. Project Specific Provisos

1. That the Department's review of this industrial treatment works has been limited to the administrative aspects of the application. For the technical aspects of the project, the Department has relied upon the certification dated November 9, 2010 by the N.J. Licensed Professional Engineer, Kershu Tan, License No. 43952, responsible for the design of the treatment works, stating:.

   a. The proposed treatment works, as designed, will enable the facility to meet all applicable Federal, State and local effluent limitations, conditions and/or requirements;

   b. The proposed treatment works or contributing facility will not dilute any portion of its waste stream for the purpose of meeting any applicable NJPDES effluent limitation or condition;

   c. The permittee currently holds a valid NJPDES permit, General permit authorization, or for indirect dischargers, the applicant is specifically exempted by the Department.

2. That the operation of the treatment works shall be under the supervision of a licensed operator on the first day of operation and continually thereafter in accordance with N.J.S.A. 58:11-64 and amendments thereto. The operator shall meet the requirements for N-2 classification or equivalent, pursuant to the provisions of N.J.A.C. 7:10A-1.

3. That permission to construct and operate is being granted without the consent of the Borough of Rockaway, in accordance with N.J.A.C. 7:14A-22.8 et seq.

4. That the issuance of this permit does not exempt the applicant of the responsibility to comply with all other permitting and regulatory requirements of the Department's Air Quality Regulation Program.

B. Additional General Industrial TWA Conditions

1. That the storage and/or disposal of any sludge or residue resulting from the operation of the treatment facility approved herein shall be in conformance with the applicable requirements and provisions of N.J.A.C. 7:14A-20 et seq. and/or N.J.A.C. 7:26-1.1 et seq.

2. That no sewage or industrial wastes shall bypass treatment except in conformance with the applicable NJPDES Permit and/or N.J.A.C. 7:14A-2.5, or other applicable regulatory requirement, and that all sewage or industrial wastes arriving at the treatment works to which the approval relates shall be treated by each and every process comprising said treatment works.

3. That no wastewater shall be treated by said works or portion thereof until a professional engineer licensed to practice in this State has certified that the project has been inspected under his/her supervision and constructed according to approved plans and specifications and that the works are adequate to meet all applicable Federal, Interstate and State effluent limitations. If any changes are made, "as-built" plans and specifications shall be submitted and certified by the professional engineer responsible.

4. That for facilities which discharge directly into surface waters and/or ground waters of the State, the permittee shall conform to all effluent and monitoring requirements stipulated in the NJPDES Permit for this facility, or any modification thereof, unless otherwise permitted by the Department. That the discharge of treated effluent into the Rockaway River shall be in conformance with the NJPDES Permit equivalent for this facility.

GENERAL CONDITIONS FOR TREATMENT WORKS APPROVALS

Section A. GENERAL CONDITIONS

1. This permit is revocable, or subject to modification or change, at any time, when in the judgement of the Department of Environmental Protection of the State of New Jersey such revocation, modification or change shall be necessary.

2. The issuance of this permit shall not be deemed to affect in any way action by the Department of Environmental Protection of the State of New Jersey on any future application.

3. The works, facilities, and/or activities shown by plans and/or other engineering data, which are this day approved, subject to the conditions herewith established, shall be constructed and/or executed in conformity with such plans and/or engineering data and the said conditions.

4. No change in plans or specifications shall be made except with the prior written permission of the Department of Environmental Protection of the State of New Jersey.

5. The granting of this permit shall not be construed to in any way affect the title or ownership of property, and shall not make the Department of Environmental Protection or the State a party in any suit or question of property.

6. This permit does not waive the obtaining of Federal or other State or local government consent when necessary. This permit is not valid and no work shall be undertaken until such time as all other required approvals and permits have been obtained.

7. A copy of this permit shall be kept at the work site, and shall be exhibited upon request of any person.

8. No treatment unit or conveyance system may be by-passed which would result in the discharge of untreated sewage into any of the waters of the state.

9. The full responsibility for adequate design, construction and operation of the treatment works, and the full responsibility for successful collection, treatment, and discharge of pollutants shall be on the applicant.

10. The issuance of approval by the Department shall not relieve the applicant of the continuing responsibility for the successful collection, treatment, or discharge of pollutants for the continuing compliance with any applicable effluent limitations, permits, regulations, statute, or other law.

11. Review and approval is based solely upon the information contained in the application and the contents of the engineer's report as certified by the licensed professional engineer as being in compliance with the Department's Rules and Regulations.

Section B. CONSTRUCTION COMPLETION CERTIFICATION

1. Within 30 days of completion of the treatment works approved herein, the permittee shall submit two executed forms, WQM005 Certification of Approval, to the appropriate sewage treatment plant (STP) for their approval prior to operation. One executed copy approved by the receiving STP shall be forwarded to the appropriate Bureau and address noted on the cover page of this approval. Failure to submit the certification within 30 days of completion of the project may be grounds for revocation of the permit. Should partial operation be required prior to completion, approval will be under local jurisdiction.

2. In cases where the project and the receiving treatment facility are one in the same, the WQM005 Certification of Approval form must be submitted to the Bureau and address noted on the cover page of this approval within 30 days of completion of the treatment works. Failure to submit the certification within this time period may be grounds for revocation of the permit.

Section C. PERMIT EXPIRATION AND EXTENSIONS OF TIME

1. This permit shall remain in force for a period of only two years from the date of approval unless stated otherwise within the special provisos, or construction of said works has begun within the approved time frame. Interruption of construction of said works for a period of more than two years may serve as a basis for permit revocation.

2. Treatment works approvals may be extended beyond the original two year approval date, to a maximum of five years from the original issuance date, in accordance with the terms and conditions in N.J.A.C. 7:14A-22.12, unless stated otherwise within the special provisos. A time extension request must be received by the Department prior to the permit's expiration date. Requests must be submitted to the Bureau and address noted on the cover page.

Section D. ADJUDICATORY HEARING REQUESTS

1. Pursuant to N.J.A.C. 7:1C-1.9 et seq., any interested person who considers himself or herself aggrieved by this action, may, within 10 days of publication of notice of the decision in the DEP Bulletin, request a hearing by addressing a written request for such hearing to the:

   Office of Legal Affairs
   Attention: Adjudicatory Hearing Requests
   Department of Environmental Protection
   P.O. Box 402
   Trenton, NJ 08625-0402

   Such a request should include a completed Administrative Hearing Request Checklist and Tracking form for Approvals or Denials (enclosed herein for Denials). This form is required, as DEP is the transmitting agency to the Office of Administrative Law, pursuant to N.J.A.C. 1:1-8.2.

12d.

State of New Jersey

DEPARTMENT OF ENVIRONMENTAL PROTECTION

JON S. CORZINE
Governor

DIVISION OF WATER SUPPLY
WATER SUPPLY PERMITTING
BUREAU OF WATER ALLOCATION
P.O. BOX 426
TRENTON, NEW JERSEY 08625-0426
TEL.# 609-292-2957
FAX.# 609-633-1495

LISA P. JACKSON
Commissioner

NOTICE OF PERMIT EQUIVALENCY

IN THE MATTER OF

US Environmental Protection Agency
Region 2, Rockaway Borough Well Field

Permit Equivalency No. 2588E to divert water from 3 recovery wells in the Netcong Till Aquifer in the Borough of Rockaway, Morris County

NOTICE IS HEREBY GIVEN THAT A PERMIT EQUIVALENCY HAS BEEN FILED WITH THE DEPARTMENT OF ENVIRONMENTAL PROTECTION, DIVISION OF WATER SUPPLY, TRENTON, NEW JERSEY. Pursuant to provisions of the Water Supply Management Act, N.J.S.A. 58:1A-1 et seq., the United States Environmental Protection Agency, Region 2, 290 Broadway, New York, New York 10007 filed a Permit Equivalency on February 25, 2008 to divert 11.45 million gallons of water per month and 139.3 million gallons of water per year at a rate of 265 gallons per minute. The wells are located in the Borough of Rockaway, Morris County off of Maple Avenue. Diversion is to be used for groundwater remediation.

This applicant is not required to obtain a water allocation permit under N.J.S.A. 58:1A because the remediation is required under the Comprehensive Environmental Response, Compensation and Liability Act (CERCLA). In place of the standard Water Allocation Permit, a Permit Equivalency is being issued by the NJDEP. The owner will be required to comply with all of the conditions of a permit. However, no public hearing on the permit equivalency will be held. Public input is being solicited and will be referred to the U.S. Environmental Protection Agency.

Notice is hereby given that comments regarding the application must be received no later than April 25, 2008 and submitted to:

Diane Zalaskus
Department of Environmental Protection
Division of Water Supply
Bureau of Water Allocation
P.O. Box 426
Trenton, New Jersey 08625

The application and pertinent data may be examined, by appointment only, by contacting Andy MacDonald of the Bureau of Water Allocation, Division of Water Supply, 401 East State Street, Trenton, New Jersey 08625. The Bureau of Water Allocation can be contacted at (609) 292-2957.

12d.

State of New Jersey

DEPARTMENT OF ENVIRONMENTAL PROTECTION

JON S. CORZINE
Governor

DIVISION OF WATER SUPPLY
WATER SUPPLY PERMITTING
BUREAU OF WATER ALLOCATION
P.O. BOX 426
TRENTON, NEW JERSEY 08625-0426
TEL.# 609-292-2957
FAX.# 609-633-1495

LISA P. JACKSON
Commissioner

March 20, 2008

Rockaway Borough Well Field Site
290 Broadway
New York, NY 10007-1866
Attn: Brian Quinn

Dear Mr. Quinn:

Re: Program Interest ID 2588E
Activity No. EQP080001

I have completed the Draft Permit Requirements and the Draft Permit Inventory based upon my review of the information submitted with the application filed on behalf of the Rockaway Borough Well Field Site. Attached for your review and comments are copies of the above referenced draft documents.

Please advise me if you find any of this information to be incomplete or inaccurate.

The Permit Requirements section should be reviewed carefully to make sure that you will be able to comply with the proposed equivalency conditions. Your review and comments at this time will allow us to resolve any problems before the equivalency is issued.

I would appreciate receiving your comments within 14 days from the date of this letter. If I do not hear from you within this time frame, I will assume that the Draft Permit Requirements and the Draft Permit Inventory are acceptable to you, and the Bureau will continue with processing of the equivalency application. Should you have any questions please contact me at (609) 292-2957.

Very truly yours,

Andy MacDonald
Bureau of Water Allocation

Enclosure

ROCKAWAY BOROUGH WELLFIELD SITE
2588E

Permit Equivalency : EQP080001

Permit Inventory

Water Diversion Sources - Water may be diverted under this permit from the following sources:

Source Designation (Well Permit No. or Intake No.)	Description	Subject Item ID
2500067386	EW-7	WSWL0000826928
2500067387	EW-5	WSWL0000826929
2500067388	EW-6	WSWL0000826931

Remaining Subject Items (monitoring wells, wells to be sealed, etc) - The following items are present but are not approved diversion sources:

Source Designation	Source Description	Subject Item ID
2500069391	EW-7A	WSWL0000855226

Group Subject Items - The following items are grouped sources for the purpose of setting permit requirements outlined in this document:

Group Designation	Group Description	Group Subject Item ID	Group Members
ROCKAWAY BOROUGH SUPERFUND SITE	2588E EQ PERMIT - ALL DIVERSION SOURCES	WSWA0000868121	NETCONG TILL AQUIFER SOURCES, WELLS EW-5, EW-6, EW-7 (WARG868122)
NETCONG TILL AQUIFER SOURCES	WELLS EW-5, EW-6, EW-7	WARG0000868122	2500067386, EW-7 (WSWL826928)
			2500067387, EW-5 (WSWL826929)
			2500067388, EW-6 (WSWL826931)

ROCKAWAY BOROUGH WELLFIELD SITE
2588E

Permit Equivalency : EQP080001

Permit Requirements

Limit Requirements

The following limits apply and are the maximum permitted allocation:

Final Permit Phase

Subject Item	Parameter	Limit
ROCKAWAY BOROUGH SUPERFUND SITE, 2588E EQ PERMIT - ALL DIVERSION SOURCES (WSWA868121)	Maximum Diversion Rate	<= 265 Gallons Per Minute. [N.J.A.C. 7:19- 2]
	Water Diverted	<= 11.45 Million Gallons Per Month. [N.J.A.C. 7:19- 2]
		<= 137.4 Million Gallons Per Year. [N.J.A.C. 7:19- 2]

Other Limit Requirements

Final Permit Phase

Subject Item	Parameter	Limit
2500067386, EW-7 (WSWL826928)	Rated Pump Capacity	<= 75 Gallons Per Minute. [N.J.A.C. 7:19- 2]
2500067387, EW-5 (WSWL826929)	Rated Pump Capacity	<= 40 Gallons Per Minute. [N.J.A.C. 7:19- 2]
2500067388, EW-6 (WSWL826931)	Rated Pump Capacity	<= 150 Gallons Per Minute. [N.J.A.C. 7:19- 2]

Monitoring Requirements

Final Permit Phase

Subject Item	Requirement	Frequency	Monitored Parameter	Monitoring Method
2500067386, EW-7 (WSWL826928)	The monthly diversion from each source indicated shall be monitored. [N.J.A.C. 7:19- 2]	Each Month	Water Diverted	Meter
2500067387, EW-5 (WSWL826929)				
2500067388, EW-6 (WSWL826931)				

ROCKAWAY BOROUGH WELLFIELD SITE
2588E

Permit Equivalency : EQP080001

Submittal/Action Requirements

Final Permit Phase

Applicable Subject Items	Submittal/Action Type	Requirement
2500067386, EW-7 (WSWL826928)	Submit Private Quarterly Report	The required monitoring results shall be recorded on the form provided by the Department. The completed form shall be submitted within 30 days after the end of each quarter. [N.J.A.C. 7:19- 2]
2500067387, EW-5 (WSWL826929)		
2500067388, EW-6 (WSWL826931)		
ROCKAWAY BOROUGH SUPERFUND SITE, 2588E EQ PERMIT - ALL DIVERSION SOURCES (WSWA868121)	Submit Renewal Application	A renewal application must be submitted three months prior to the expiration date. [N.J.A.C. 7:19- 2]

Text Requirements

All Phases

ROCKAWAY BOROUGH SUPERFUND SITE, 2588E EQ PERMIT - ALL DIVERSION SOURCES (WSWA868121)

1. All diversion sources shall be metered with a totalizing flow meter. [N.J.A.C. 7:19- 2]
2. At a minimum, each diversion source flow meter shall be calibrated at least once every five years. [N.J.A.C. 7:19- 2]
3. The permittee shall investigate to the Department's satisfaction complaints by users of wells or surface water supplies within the zone of influence of its diversion to determine what impact the diversion has had on such wells or surface water supplies. A report on these investigations shall be forwarded to the Bureau of Water Allocation. Any well or surface water supply which becomes damaged, dry, has reduced capacity, reduced water quality or is otherwise rendered unusable as a water source as a result of the permittee's diversions shall be repaired or replaced at the expense of the permittee. Work shall be in accordance with all State, County and Municipal construction standards for potable water. After reviewing all applicable investigational reports the Department of Environmental Protection, along with the USEPA, will make the final determination regarding the validity of such complaints, the scope or sufficiency of such investigations, and will determine how to resolve any problems resulting from the diversion. [N.J.A.C. 7:19- 2]
4. The operation of the water withdrawal project shall not cause long-term progressive lowering of groundwater levels, permanent loss of storage capacity or substantial impact on low flows of perennial streams or serve to spread the contamination. [N.J.A.C. 7:19- 2]
5. All well construction and decommissioning activity shall be conducted in accordance with N.J.A.C. 7:9D et seq. and applicable regulations. [N.J.A.C. 7:19- 2]
6. The local Health Department shall be notified of the proposed diversion within 30 days of the issuance date of this permit equivalency and prior to the start of pumping. [N.J.A.C. 7:19- 2]
7. All well owners within the estimated zone of influence of the diversion shall be notified within 30 days of the issuance date of this permit equivalency and prior to the start of pumping. [N.J.A.C. 7:19- 2]
8. The pumping equipment capacity may be increased and well locations may be changed provided that the maximum diversion rate and the water diverted monthly and annual allocation limits are not exceeded. The permittee must notify the Bureau of Water Allocation in writing 30 days prior to any such changes. [N.J.A.C. 7:19- 2]
9. The issuance of this permit shall not be deemed to affect in any way action by the Department of Environmental Protection of the State of New Jersey on any future application. [N.J.A.C. 7:19- 2]

ROCKAWAY BOROUGH WELLFIELD SITE
72588E

Permit Equivalent - EQP080001

DRAFT

Text Requirements

All Phases

ROCKAWAY BOROUGH SUPERFUND SITE, 25[illegible] PERMIT - ALL DIVERSION SOURCES (WSWA868121)

10. No change in plans or specifications shall be made except with the prior written permission of the Department of Environmental Protection of the State of New Jersey. [N.J.A.C. 7:19- 2]
11. The granting of this permit shall not be construed to in any way affect the title or ownership of property, and shall not make the Department of Environmental Protection or the State a party in any suit or question of ownership of property. [N.J.A.C. 7:19- 2]
12. This permit does not waive the obtaining of Federal or other State or local government consent when necessary. This permit is not valid and no work shall be undertaken until such time as all other required approval's and permits have been obtained. [N.J.A.C. 7:19- 2]
13. A copy of this permit shall be kept at the facility site, and shall be exhibited upon request of any person. [N.J.A.C. 7:19- 2]
14. The Department has the right to enter and inspect any site, building, or equipment, or any portion thereof, owned or operated by the permittee, at any time, in order to ascertain compliance or noncompliance with N.J.S.A. 58:1A-1 et seq., 58:4A-4.1 et seq., 58:12A-1 et seq., these rules, or any other agreement or order issued or entered into pursuant thereto. Such right shall include, but not be limited to, the right to require the testing of any equipment at the facility, to sketch or photograph any portion of the site, building or equipment, to copy or photograph any document or records necessary to determine such compliance or noncompliance, and to interview any employees or representative of the owner, operator, or permittee. Such right shall be absolute and shall not be conditioned upon any action by the Department, except the presentation of appropriate credentials as requested and compliance with appropriate standard safety procedures. [N.J.A.C. 7:19- 2]
15. This permit may be transferred, with the consent of the Department, but only for the identical use of the waters. [N.J.A.C. 7:19- 2]
16. If the authorized diversion privileges are not currently diverted, subject to contract, or reasonably required for a demonstrated future need, they shall revert back to the State upon renewal or modification of the permit. [N.J.A.C. 7:19- 2]
17. The permittee shall protect each source from vandalism, tampering, and contamination at all times. [N.J.A.C. 7:19- 2]
18. This permit shall expire as indicated on the permit approval cover page; however, any action required pursuant to a critical area designation shall take precedence over this expiration date. [N.J.A.C. 7:19- 2]

Mail Code 401-03
Division of Water Supply - Water Supply Permitting Element
Bureau of Water Systems and Well Permitting
401 E. State Street - P.O. Box 420
Trenton, New Jersey 08625-0420
Tel #: (609) 984-6831 - Fax #: (609) 633-1495
http://www.state.nj.us/dep/watersupply/

January 5, 2011

Brian Quinn, Remedial Project Manager
US Environmental Protection Agency
290 Broadway
NEW YORK, NY 10007

Re: Physical Connection Permit No.: 1682-WPC100001

Dear Sir:

Enclosed is your Approval to Install-Construct New Physical Connection Permit which is being issued by this Department in accordance with the provisions of N.J.S.A. 58:12A-1 et seq., N.J.S.A. 58:11-9.1 et. seq., and N.J.A.C. 7:10-10.1 et. seq.

Please note that separate approval is required from the Public Community Water System prior to the installation of the backflow prevention device.

This permit is for the installation and <u>not operation</u> of the backflow prevention device and prior to the issue of the operation permit a site inspection by the Bureau and a pressure test of the device needs to conducted in accordance with N.J.A.C. 7:10-10.6. Therefore your attention to the conditions of this permit is advised and in particular the need to submit the Construction Completion Certification, which is enclosed with this permit, to the Bureau of Water Systems and Well Permitting upon completion of the installation.

The Construction Completion Certification serves as the application to the Bureau of Water Systems and Well Permitting for the issue of the operate permit and the request for a site inspection. However you will need to make arrangements upon completion of the installation with the public community water system, Rockaway Boro Water Dept; the administrative authority Morris Co. Office of Health Mgt. for their inspection and to witness the test conducted in accordance with N.J.A.C. 7:10-10.6.

If you have any questions, you may call Jim Montgomery at (609) 984-6831.

Sincerely,

Steven Pudney, C. Eng. MICE
Acting Section Chief, SDWA Permits - North
Bureau of Water Systems and Well Permitting

Enclosures: Installation Permit
cc: Rockaway Borough Water Department (PWSID No. NJ1434001)
Morris County Office of Health Management
Rockaway Borough Plumbing Sub-Code Official

Mail Code 401-03
Division of Water Supply - Water Supply Permitting Element
Bureau of Water Systems and Well Permitting
401 E. State Street - P.O. Box 420
Trenton, New Jersey 08625-0420
Tel #: (609) 984-6831 - Fax #: (609) 633-1495
http://www.state.nj.us/dep/watersupply/

INSTALLATION PERMIT*

The New Jersey Department of Environmental Protection grants this permit in accordance with your application, attachments accompanying same application and applicable law and regulations. This permit is also subject to further conditions and stipulations enumerated in the supporting documents which are agreed to by the permittee upon acceptance of the permit.

Permit No.	**Issuance Date**	**Effective Date**	**Expiration Date**
WPC100001	January 5, 2011	January 5, 2011	July 5, 2011

Name and Address of Applicant	**Location of Activity/Facility**
US Environmental Protection Agency 290 Broadway NEW YORK, NY 10007	Jackson Street and Ogden Avenue Rockaway Borough, Morris County

Physical Connection ID No.	**Type of Permit**	**Statute(s)**
1682	Approval to Install-Construct New Physical Connection Permit	NJSA 58:11-9.1 et seq. and NJSA 58:12A-1 et seq.

This permit grants permission to: Install a Physical Connection between an approved Public Community Water System and an Unapproved Water Supply at the above named location, in consideration of the <NO DATA FOUND> Permit Application received November 8, 2010.

This permit does not give permission to operate the connection.

Number, Type and Size of Backflow Preventer Valves Permitted:

Subject Item No.	No	Size	Manuf.	Model No.	Serial No.	Type	Comments	Bypass Installed
WSPC0000943209	1	0.75 inches				Reduced Pressure Zone	Seal Water for VT Pump Well # 1	No
WSPC0000943209	2	1.0 inches				Reduced Pressure Zone	Service Water Supply to GWR System	No

Bypass and Detector Information:

Subject Item No.	No.	Size	Manuf.	Model No.	Serial No.	Type
N/A	N/A	N/A	N/A	N/A	N/A	N/A

Owner of Approved Public Water System- **Rockaway Borough Water Department**

Local Administrative Authority- **Rockaway Borough Plumbing Sub-Code Official**

Source of Unapproved Water Supply- **Industrial Well**

Approved by the Authority of:
Bob Martin
Acting Commissioner
Department of Environmental Protection

Steven Pudney, C. Eng. MICE
Acting Section Chief, SDWA Permits - North

* The word permit means approval, certification, registration etc.
.

PHYSICAL CONNECTION PERMIT
CONSTRUCTION COMPLETION CERTIFICATION

Division of Water Supply
Bureau of Water Systems and Well Permitting
401 E State Street, PO Box 426
Trenton, NJ 08625-0426

Attention: Physical Connection Permitting Unit

PERMITTEE: US EPA
PERMIT NO.: 1682 WPC100001 **ISSUANCE DATE:** January 5, 2011

PROJECT DESCRIPTION: one 3/4 inch and one 1.0 inch reduced pressure zone backflow prevention assemblies at Rockaway Borough Well # 1 Potable Water Treatment/Ground Water Remediation Facility at the intersection of Jackson Street and Ogden Avenue.

COUNTY: Morris **MUNICIPALITY:** Rockaway Borough

I (We) hereby certify that the following has been built and was completed in accordance with the approved plans, specifications, and other supporting information.

Number, Type and Size of Backflow Preventer Valves Permitted:

Subject Item No.	No	Size	Manuf.	Model No.	Serial No.	Type	Comments	Bypass Installed
WSPC0000943209	1	.75 inches				Reduced Pressure Zone	Seal Water for VT Pump Well # 1	No
WSPC0000943209	2	1 inches				Reduced Pressure Zone	Service Water Supply to GWR System	No

Bypass and Detector Information:

Subject Item No.	No.	Size	Manuf.	Model No.	Serial No.	Type
N/A	N/A	N/A	N/A	N/A	N/A	N/A

Please complete or correct the above valve details

COMPLETION DATE: _____

Approval by the Public Water System of this request for inspection, test and permit to operate.
Rockaway Borough Water Department (PWSID No. NJ1434001)
PWSID NJ1434001
Name and Title of Public Water System authorized representative.

_____

Signature of Water System Representative Date

Owner Certification
I (We) hereby request the Bureau of Water Systems and Well Permitting's site inspection and issue of:

☐ A New Physical Connection Permit to operate the installation. *

☐ Incorporation of this installation in the following Physical Connection Permit. *
Program Interest ID: Permit Number: WPC

* Check appropriate permit.

_____

Signature of Owner Date

Page 2 of the Certification to be completed upon inspection and testing

PHYSICAL CONNECTION PERMIT
CONSTRUCTION COMPLETION CERTIFICATION

PERMITTEE: US EPA

PERMIT NO.: 1682 WPC100001

To Be Completed After Installation, Inspection and Testing

1. The Local Administrative Authority of:

(☐ County Health, ☐ Local Health or ☐ Plumbing Sub-Code Official)
_____ hereby certifies that through a site inspection and witnessing of a pressure test of each valve at each location listed on the reverse side of this form. That the Physical Connection Installation(s) were in Compliance with the Rules and Regulations set forth in N. J. A. C. 7:10-10.1 et.Seq. and hereby recommends this application for approval.

Print Name_____ **Title** _____

Signature _____ **Date**____/____/____ **Phone** _____

2. The Supplier of Water

_____ hereby certifies that through a site inspection and witnessing of a pressure test of each valve at each location listed on the reverse side of this form. That the Physical Connection Installation(s) were in Compliance with the Rules and Regulations set forth in N. J. A. C. 7:10-10.1 et.Seq. and hereby recommends this application for approval.

Print Name_____ **Title** _____

Signature _____ **Date**____/____/____ **Phone** _____

3. The Department of Environmental Protection, Division of Water Supply, Bureau of Water Systems and Well Permitting hereby certifies that through a site inspection and witnessing of a pressure test of each valve at each location listed on the reverse side of this form. That the Physical Connection Installation(s) were in Compliance with the Rules and Regulations set forth in N. J. A. C. 7:10-10.1 et.Seq. and hereby recommends this application for approval

Print Name_____ **Title** _____

Signature _____ **Date**____/____/____ **Phone** _____

Permit Requirements

Submittal/Action Requirements

Applicable Subject Items	Submittal/Action Type	Requirement
Physical Connections at Borough of Rockaway Well #1 TP (WSPC943209)	Allow the DEP to enter and inspect permitted facility to ascertain compliance	Install Valves within 180 days of the effective date of this permit. [N.J.A.C. 7:10-10]

Text Requirements

All Phases

Physical Connections at Borough of Rockaway Well #1 TP (WSPC943209)

1. GENERAL PERMIT CONDITIONS.
2. The permit is revocable, or subject to modification or change, at any time, when in the judgement of the New Jersey Department of Environmental Protection such revocation, modification or change shall be necessary. [N.J.A.C. 7:10-10]
3. The issuance of this permit shall not be deemed to affect in any way action by the New Jersey Department of Environmental Protection on any future application.
4. The works, facilities and/or activities shown by plans and/or other engineering data, which are this day approved, subject to the conditions herewith established, shall be constructed and/ or executed in conformity with such plans and/ or engineering data and said conditions. [N.J.A.C. 7:10-10]
5. The granting of this permit shall not be construed in any way to affect the title or ownership of property, and shall not make the New Jersey Department of Environmental Protection or the State a party in any suit or question of ownership of property.
6. This permit does not waive the obtaining of Federal or other State or local Government consent when necessary. This permit is not valid and no work shall be undertaken until such time as all other required approvals and permits have been obtained.
7. In the examination of plans and/ or other engineering data, the New Jersey Department of Environmental Protection does not examine the structural features of the design, such as thickness of concrete or its reinforcement, the efficiency of any electrical or mechanical equipment or apparatus; and the approval herewith given does not include these features. [N.J.A.C. 7:10-10]
8. SPECIFIC PERMIT CONDITIONS.
9. For this permit to remain valid the valve(s) listed on this permit shall be installed within 180 days from the issuance date of this permit. [N.J.A.C. 7:10-10]
10. No administrative change to an existing Physical Connection Permit shall be made without notifying the New Jersey Department of Environmental Protection within 14 days of such change pursuant to N.J.A.C. 7:10-10.7(a). [N.J.A.C. 7:10-10]
11. Upon completion of the physical connection installation the owner of the facility shall contact the owner of the public community water system, the Department, and the administrative authority to arrange for the initial inspection and pressure testing of the physical connection installation in accordance with N.J.A.C. 7:10-10.6. [N.J.A.C. 7:10-10]
12. No modification to an approved physical connection installation listed in N.J.A.C. 7:10-10.7(b) shall be made prior to submitting an application to modify an existing physical connection permit pursuant to N.J.A.C. 7:10-10.7(c) except as provided in N.J.A.C. 7:10-10.7(d). [N.J.A.C. 7:10-10]
13. A copy of this Permit shall be kept at the facility, and shall be exhibited upon request of Department personnel. [N.J.A.C. 7:10-10]

Text Requirements

All Phases

Physical Connections at Borough of Rockaway Well #1 TP (WSPC943209)

14. Upon completion of inspection and pressure testing of each device, the authorized representative of the public community water system, the administrative authority and the Department shall complete the Certification of Inspection and Testing results on the Initial Test and Maintenance Report Form, and endorse the Application Form for Initial Physical Connection Permit. [N.J.A.C. 7:10-10]

1682

IPCTAF 09/07

Physical Connection Permit No.: 1682 **WPC** 100001 & 120001

NEW JERSEY DEPARTMENT OF ENVIRONMENTAL PROTECTION

Initial Physical Connection Test & Maintenance Report

Instructions: After installation both pages of this form are to be completed for the initial test of each proposed Physical Connection Backflow Prevention Valve, performed by a Certified Tester and shall be submitted to the Department of Environmental Protection, Division of Water Supply, Bureau of Water Systems and Well Permitting.

Date of test 01/05/2012

To: NJ DEP
Division of Water Supply
Bureau of Water Systems and Well Permitting
PO Box 426
Trenton, NJ 08625-0436

From: (Name of Permit Holder)
US Environmental Protection Agency
290 Broadway
New York, NY-10007

The backflow prevention device identified below has been tested and inspected as required by N.J.A.C. 7:10-10.6 and is certified to be in compliance with this regulation.

Description of Valve

Manufacturer: WATTS ☒ RPZ ☐ DCVA
Model Number: 919 QT Size: 1.0 in.
Serial Number: 29703
Comments and Notations: Service water supply to GWR System

Location of Valve

Groundwater Remediation Plant
Jackson St. & Ogden Ave
Rockaway Boroughs, Morris County

	PRESSURE TEST			INTERNAL INSPECTION	
	REDUCED PRESSURE ZONE ASSEMBLY			DOUBLE CHECK VALVE ASSEMBLY	
	DOUBLE CHECK VALVE				
	1st Check	2nd Check	Relief Valve	1st Check	2nd Check
Initial Test Passed ☒ Failed ☐	Closed Tight ☒ at 7.2 psid Leaked ☐	Closed Tight ☒ at ____ psid Leaked ☐	Opened at 2.5 psid	OK ☐	OK ☐
	No. 2 Shut-off Valve Closed Tight ☒ Leaked ☐	By-pass Used ☐	Did Not Open ☐	Failed ☐	Failed ☐
Repairs & Materials Used					
Test After Repair & Assembly	Closed Tight ☐ psid	Closed Tight ☐ psid	Opened at psid	OK ☐	OK ☐

Certification by the Certified Tester

I hereby certify that on 1/5/12 the Backflow Prevention Device listed on this form was functioning satisfactorily at the time of the test.

Name of Firm: AP Certified Testing, LLC

Address: 5 Jayne Terrace, Ringwood, NJ-07456

Certified Testers Name: Gregory Ficher Title: Certified Tester

Certified Testers Signature: Gregory Ficher Date: 1/5/12

Certifying Authority: NEWWA Cert. ID #: 9633 Exp. Date: 2/28/2014

Physical Connection Permit No.: 1682 -WPC 100001 & 120001 **PAGE 2 OF 2**

Certification by Supplier of Water:

On 1/5/12 The Supplier of Water for the facility named of the reverse side of this form hereby recommends that the Physical Connection Permit be issued for One Year and Certifies that; through witnessing of the Pressure Tests preformed by a Certified Tester that: The Backflow Prevention Device(s) were functioning satisfactorily at the time of the test.

Name of the Supplier of Water Boro of Rockaway

Name: Joseph Rossi

Title: Superintendent

Signature: Joseph Rossi

Certification by Local Administrative Authority:

On 1/5/12 The Local Administrative Authority for the facility named of the reverse side of this form hereby recommends that the Physical Connection Permit be issued for One Year and Certifies that; through witnessing of the Pressure Tests preformed by a Certified Tester that: The Backflow Prevention Valve was functioning satisfactorily at the time of the test.

Name of Local Administrative Authority Randolph Health Dept. – Servicing Rockaway Borough

Name: Stephen Widuit

Title: REHS

Signature:

The Department of Environmental Protection, Division of Water Supply, Bureau of Water Systems & Well Permitting hereby certifies that through a site inspection and witnessing of a pressure test. The Backflow Prevention Valve was functioning satisfactorily at the time of the test and that the Physical Connection Installation(s) were in Compliance with the Rules and Regulations set forth in N. J. A. C. 7:10-10.1 et. seq and hereby recommends this application for approval.

1.0" RPZ, WATTS 919QT S.#29703 Passed
1.75" RPZ, Separate System Not required to be included in this permit. Syed 1/5/12

Name: Syed Rizvi

Title: Environmental Engineer 3

Signature: Syed Rizvi

Tel (973) 627-2000
Fax (973) 627-8294

Borough of Rockaway

MUNICIPAL BUILDING • 1 EAST MAIN STREET • ROCKAWAY, NEW JERSEY 07866

APPLICATION FOR ROAD OPENING PERMIT

Name of Applicant: CAPE Environmental Management Inc

Address: 6851 Oak Hall Lane, Columbia, MD 21045

Telephone Number: Home: _____ Business: 443-276-1994

Location of Road Opening: 33 Mill Ave to Halsey Ave, Halsey Ave to Jackson Ave, Jackson Ave to Borough Pump House #1 (122 Jackson) Portions of Mott Place Included.

Purpose: Extraction Well / Force main piping for the Rockaway Well Field Superfund Project - East main / Wall St Plume Remediation

Type/Size of Opening: Street ☑ Curb ☐ Sidewalk ☐ Length: 2,400 Width: 3' ± Depth: 5' ±

Starting Date: 22NOV2010 Closing Date: 17AUG2011

Other: Please See the enclosed plans

You MUST attach the following:

- a detailed plan of the proposed opening;
- ~~a check for the $50 fee;~~ NO FEE FOR EPA WORK. [illegible]
- a certificate of insurance **naming the Borough of Rockaway as an additional named insured by endorsement** designating the specific project and guaranteeing notification to the Borough of Rockaway in the event of cancellation with the following coverages: comprehensive general liability policy at least $1,000,000 each occurrence and $2,000,000 general aggregate; workers compensation limits shall be $1,000,000 each accident, $1,000,000 disease-policy limit, $1,000,000 disease - each employee; and commercial automobile policy limit shall be a minimum of $1,000,000 each accident.
- Pursuant to Chapter 173, Licenses and Permits, if the applicant is the owner of the aforementioned property, the applicant must provide proof from the Borough of Rockaway Tax Collector that taxes and assessments have been paid through the current quarter prior to the issuance of this permit.

I have received and read a copy of Chap. 217, Streets and Sidewalks, Article III, Excavations, and the applicable section of Chap. A263, Fees, of the Code Book of the Borough of Rockaway and agree to fully comply with all its provisions.

03NOV2010 — Date

Paul Ferrari - Paul Ferrari — Applicant/Title (signature required)

You will be informed of the amount of cash deposit and performance bond (to be determined by the Borough Engineer).

(FOR OFFICE USE ONLY)

Supt., Public Works: ☒ Approved ☐ Denied [signature] Date: 11/4/10

Borough Engineer: ☑ Approved ☐ Denied [signature] Date: 11/15/10

Cash Deposit: $3,000 Check No.: 7335 Performance Bond: — Check No.: ____ Date: _____

Insurance Policy Number: PRO P9342632 Taxes/Assessments Paid ☐ Yes ☐ No

Borough Permit No.: N/A Date: 12/3/10

Date of Final Inspection: _____ By: _____

Return Deposit to Applicant? ☐ Yes ☐ No Amount: _____ Resolution: _____

Copies to: Applicant Borough Engineer Borough Clerk Supt., Public Works

CHAPTER 217, STREETS AND SIDEWALKS

ARTICLE III, Excavations [Adopted 10-14-1971 by Ord. No. 5-71 as Ch. 25, Art. IV, of the 1971 Code of Ordinances; amended in its entirety 5-27-1982 by Ord. No. 21-82]

§ 217-9. Definitions.

As used herein, the following terms shall have the meanings indicated:

ADMINISTRATOR -- The Administrator of the Borough of Rockaway.

APPLICANT -- A person applying for a permit hereunder.

CHIEF OF POLICE -- The Chief of Police of the Borough.

CLERK -- The Clerk of the Borough.

ENGINEER -- The Engineer of the Borough.

HOLIDAY -- Any day designated as such by the State of New Jersey and the Borough of Rockaway.

INSPECTION FEES -- The cost of supervising and inspecting the work by the Superintendent of Public Works or his representative at prevailing per diem rates on file with the Clerk.

OPEN, OPENING or STREET OPENING -- The opening, excavation, digging or other such activity under, over or through any street, as well as any appurtenances thereto, within the Borough,

OSHA -- The Occupational Safety and Health Regulations prescribed by the Occupational Safety and Health Administration, United States Department of Labor.

PERMIT -- A street opening permit.

PERMITTEE -- A person, either natural or created by law, to whom a permit has been granted.

PERMITTER -- The Borough of Rockaway.

STREET -- The right-of-way of any municipal street, road, highway, alley or other public thoroughfare or easement within the Borough.

SUPERINTENDENT OF PUBLIC WORKS -- The Superintendent of Public Works of the Borongh.

WEEKEND -- Saturday and Sunday.

§ 217-10. Permit required.

No person shall open, dig up, excavate or disturb any street or any portion thereof within the Borough without first having obtained a permit thereof in accordance with the provisions of this article.

§ 217-11. Permit application.

A person desiring to open, dig up, excavate or disturb any street or portion thereof shall make written application for a permit to do so to the Clerk on forms provided by the Clerk. The application shall state the purpose of the proposed street opening and the type and depth of the installation, if any, to be accomplished and shall include a statement by the applicant agreeing to undertake all work in accordance with the provisions of this article. The application shall be accompanied by a detailed plan showing both the proposed street opening and the proposed work to be undertaken and

(a) Blasting.

(b) Regulations concerning traffic flow.

(c) Pedestrian safety.

(d) Parking of contractor personnel vehicles, contractor's work vehicles and storage of equipment.

(e) Flagmen, as well as warning and traffic control signs, barricades and devices.

(f) Street accessibility to the passage of fire apparatus, police vehicles, ambulances and other emergency or essential equipment.

(3) The advice and instructions of the Shade Tree Commission as may be deemed appropriate by the Borough to any work which may involve trimming, pruning or removal of trees or shrubs within the right-of-way or the cutting of tree roots.

(4) In the event that regulations are not promulgated, the ordinary, reasonable and prudent requirements shall apply to all work done.

C. The permittee shall at all times and at his own expense preserve and protect from injury any adjoining property by providing proper foundations and taking other means suitable for the purpose. Where, in the protection of such property, it is necessary to enter upon private property for the purpose of taking appropriate protection measures, the permittee shall obtain written permission from the owner of such private property for such purpose, unless such permission cannot be obtained, in which event the permitter shall have the right to waive this requirement. The permittee shall, at his own expense, shore up and protect all buildings, walls, fences or other property likely to be damaged during the progress of the excavation work and shall be responsible for all damage to public or private property or highways resulting from his failure to protect and carry out such work. All construction and maintenance work shall be done in a manner calculated to leave the area clear of earth and debris and in a condition as nearly as possible to that which existed before such work began.

D. The permittee shall conduct and carry out any excavation work in such manner as to avoid unnecessary inconveniences and annoyances to the general public and occupants of nearby property. In the performance of the excavation work, the permittee shall take appropriate measures to reduce to the fullest extent practicable noise, dust and unsightly debris. The permittee shall not use heavy construction equipment between the hours of 7:30 p.m. and 7:00 a.m. or on holidays or weekends, except with the express written permission of the Superintendent of Public Works or in the case of any emergency as herein otherwise provided, nor otherwise disturb the sleep or repose of the occupants of neighboring property.

E. The regulations set forth iu § 217-14 notwithstanding, the permittee shall be solely and fully responsible for the proper and adequate performance of all work and for providing proper and adequate safety measures and precautions promulgated by OSHA or any other federal, state or local agency. The permittee shall, and by the acceptance of the permit does agree to, indemnify the Borough as well as its agents, servants and employees against and save them harmless from any and all liability, damage, claims, suits, causes of action or other demands which may arise from or be occasioned by the street opening and all work or activity relating thereto, including any injury to person or persons and any damage to or destruction of property. Should any suit, action, claim or demand be brought against the Borough, the permittee, at his own cost and expense, shall immediately take charge of, handle and defend the same, upon and after being notified by the Borough of the suit, action, claim or demand, and failing such, the Borough may defend such action at the expense of the permittee and/or require the permittee to stop work on the project until such matter has been defended to the satisfaction of the Borough.

§ 217-14. Performance guaranties; insurance requirements.

A. A permit shall not be issued unless and until the applicant has delivered to the Clerk:

(1) A cash deposit, in accordance with a schedule of fees established by the Borough Administrator with the advice of the Superintendent of Public Works and Borough Engineer, sufficient to defray and satisfy all

§ 217-15. Deviations from plans; correction of violations.

A. Subsequent to the issuance of the permit, no change or deviations from the work described in the application and plan shall be permitted without the written approval of the Borough Engineer. Any deviation from the original plan will require the permittee to file an amended plan with the Clerk.

B. If at any time work is not being performed in accordance with the description thereof in the application and plan or with either the provisions of this section or any regulations adopted hereunder, the Superintendent of Public Works or his agent shall issue a stop order to the permittee or the person actually in charge of the work at the location thereof. Upon the issuance of the stop order, the progress of the work shall cease until all matters have been corrected and further work is authorized to proceed by the Superintendent of Public Works or his agent.

C. If, after notification by the Superintendent of Public Works, the permittee fails to correct any violations of this article or of any regulations promulgated hereunder, the Borough shall take or have taken by others any and all corrective action deemed necessary, and the cost thereof shall be borne by the permittee. Such action shall in no way relieve the permittee of any responsibility and/or liability.

§ 217-16. Exemption.

The departments of the Borongh of Rockaway shall be exempt from this article.

§ 217-17. Disturbance of monuments unlawful.

The permittee shall not disturb any surface monuments or hubs found on the line of excavation work until anthorized to do so by the Superintendent of Public Works or Borough Engineer.

§ 217-18. Excavated materials; guarding of excavations.

All material excavated from the trenches and piled adjacent to the trench or in any street shall be piled and maintained in such a manner as not to endanger those working in the trench, pedestrians or users of the streets and so that as little inconvenience as possible is caused to those using streets and adjoining property. Where the confines of the area being excavated are too narrow to permit the piling of excavated material beside the trench, such as might be the case in a narrow alley, the Superintendent of Public Works shall have the authority to require that the permittee haul the excavated material to a storage site and then rehaul it to the trench site at the time of backfilling. It shall be the permittee's responsibility to secure the necessary permission and to make all necessary arrangements for all required storage and disposal sites. No permittee shall suffer or permit to remain unguarded at the place of excavation or opening any machinery, equipment or other device which may he hazardous to the safety and health of persons passing upon or near said site.

§ 217-19. Property lines and easements.

Property lines and limits or easements shall be indicated on the plan of excavation and submitted with the application for the permit, and it shall be the permittee's responsibility to confine excavation work within these limits. Protective devices, such as snow fences, shall be provided when required by the Superintendent of Public Works or Engineer.

§ 217-20. Removal of debris from Site.

As the excavation work progresses, all streets and private properties shall be thoroughly cleaned of all rubbish, excess earth, rock and other debris resulting from such work. Upon failure to do so, the work may be done by the Borough and the cost thereof charged to the permittee.

§ 217-21. Protection of watercourses, drains and sewers.

CHAPTER A263, FEES

[HISTORY: Adopted by the Mayor and Council of the Borough of Rockaway 11-14-1991 by Ord. No. 23-91. Amendments noted where applicable.]

§ A263-1. Fees established.

The following fees are hereby established:

R. Chapter 217, Streets and Sidewalks.

(1) The fee to obtain permission to open, dig up, excavate or disturb any street or portion thereof shall be $50. [Added 12-17-2007 by Ord. No. 24-07]

MORRIS COUNTY SOIL CONSERVATION DISTRICT

MAILING ADDRESS:

Morris County Courthouse
P.O. Box 900
Morristown, NJ 07963-0900

New Jersey Natural Resources Conservation Program

LOCATION ADDRESS:

560 West Hanover Avenue
Morris Township, N.J.
Tel: 973-285-2953
Fax: 973-285-8345

October 11, 2007

Conestoga-Rovers & Associates
CDM, Inc.
Raritan Plaza 1, Raritan Center
Edison, NJ 08818

Attn: Mr. Michael Popper, P.E.

Re: East Main/Wall Street Plume Remediation
Borough of Rockaway
Block #14, 45 Lot #18, 13
MCSCD #07-7173
(Rev. Date: June 2007)

Dear Mr. Popper:

This office has completed the review of the subject revised plan. It has determined that subject plan has satisfied conditions set forth in the District's Conditional Certification of July 25, 2007. Land disturbance activities may commence upon receipt of a 72-hour Start of Construction Notice.

This certification is limited to the controls specified in this plan. It is not authorization to engage in the proposed land use unless such use has been approved by the municipality or other controlling agency.

Should you have any questions regarding this or require some technical assistance, please contact this office.

Sincerely,

Joseph C. McEvoy, P.E.
District Engineer

cc: Applicant
Borough of Rockaway
Engineer
Building Inspector
Planning Board

P:\Towns\Rockaway Boro\East Main Wall Street Plume Remediation 07-7173\Satisfied Conditions 10-11-07.doc

CDM

Rockaway Borough Superfund Site

East Main/Wall Street Plume Remediation

June 2007

Applicant:

United States Environmental Protection Agency
290 Broadway
New York, NY 10007

Project Location:

Maple Avenue, Halsey Avenue, Jackson Avenue, and Union Street
Rockaway Borough
Morris County, New Jersey

Soil Erosion and Sediment Control Plan

CDM
Raritan Plaza I, Raritan Center
Edison, New Jersey 08818-3142
tel: 732 225-7000
fax: 732 225-6147

June 12, 2007

Morris County Soil Conservation District
560 West Hanover Avenue
Morris Township, New Jersey 07950

Attn: Mr. Joseph P. Dunn, Director

Project: Rockaway Borough Superfund Site: East Main/Wall Street Plume Remediation

Subject: Application for Soil Erosion and Sediment Control Plan Certification

Applicant: United States Environmental Protection Agency

Dear Mr. Dunn:

On behalf of the United States Environmental Protection Agency (EPA), CDM hereby submits a completed application for Soil Erosion and Sediment Control (SESC) Plan Certification for the above referenced project. The application package included with this letter consists of the applicable items as required pursuant to the District's checklist, including 1 set of plans.

This application is submitted as part of the East Main/Wall Street Plume Remediation project located at the Rockaway Borough Superfund Site in Rockaway Borough, Morris County, New Jersey. The details of the project are included in the enclosed package for SESC Plan Certification.

Please note the area anticipated to be disturbed during construction is 1.15 acres; hence, a Request for Authorization (RFA) for Stormwater Discharge Associated with Construction Activity is needed. Please also note that as the project is a Federal Superfund Site, application review fees are not applicable, so no payment is included with this application.

EPA endeavors to proceed with this project shortly. Therefore, timely review of this application is respectfully requested.

CDM

We thank you for your prompt attention to this matter. If we may provide any additional information, please call me at (732) 225-7000, ext. 661.

Very truly yours,

Michael Popper
Project Manager
CDM Federal Programs Corporation

cc (letter only): B. Quinn, EPA
N. Kolb, USACE
D. Bettendorf, Cape

MORRIS COUNTY SOIL CONSERVATION DISTRICT
APPLICATION FOR SOIL EROSION AND SEDIMENT CONTROL PLAN CERTIFICATION

TABLE OF CONTENTS

Tab 1 – Application Form for Soil Conservation and Sediment Control Plan Certification & Ownership Disclosure Affidavit

Tab 2 – Application Fees

Tab 3 – Description of Soil Erosion and Sediment Control Plan & Drainage Calculations

Tab 4 – Site Location Map & FEMA Floodplain Map

Tab 5 – Soil Erosion and Sediment Control Plan and Details

Tab 6 – Specifications

Tab 7 – Request for Authorization (RFA) Form: Stormwater Discharge Associated with Construction Activity

MORRIS COUNTY SOIL CONSERVATION DISTRICT
APPLICATION FOR SOIL EROSION AND SEDIMENT CONTROL PLAN CERTIFICATION

Tab 1

Application Form for Soil Conservation and Sediment Control Plan Certification

&

Ownership Disclosure Affidavit

Print Form

For District Use Only

Application Number

New Jersey Natural Resources Conservation Program

APPLICATION FOR SOIL EROSION AND SEDIMENT CONTROL PLAN CERTIFICATION

The enclosed soil erosion and sediment control plan and supporting information are submitted for certification pursuant to the Soil Erosion and Sediment Control Act, Chapter 251, P.L. 1975 as amended (NJSA 4:24-39 et. seq.) An application for certification of a soil erosion and sediment control plan shall include the items listed on the reverse side of this form.

Name of Project: Rockaway Borough Superfund Site: East M		Project Location: Municipality: Rockaway Borough	
Project Street Address: Union Street at Ogden Avenue		Block: 14, 45	Lot: 18, 13
Project Owner(s) Name: United States Environmental Protection Agency (Brian Quinn)			Phone #: 212-637-4381 Fax #: 212-637-4429
Project Owner(s) Street Address (No P.O. Box Numbers): 290 Broadway		City: New York	State: NY Zip: 10007
Total Area of Project (Acres): 1.15	Total Area or Land to be Disturbed (Acres): 0.52	No. Dwelling or other Units: 1	Fee $: 1200
Plans Prepared by*: Conestoga-Rovers & Associates; Camp, Dresser, and McKee, Inc.			Phone #: CDM 732-225-7000 Fax #: 732-225-6147
Street Address: CDM: Raritan Plaza 1, Raritan Center		City: Edison	State: NJ Zip: 08818

(Engineering related items of the Soil Erosion and Sediment Control Plan MUST be prepared by or under the direction of and be sealed by a Professional Engineer or Architect licensed in the State of New Jersey, in accordance with NJAC 13:27-6.1 et. seq.)

Agent Responsible During Construction: Cape Environmental, Inc. (David Bettendorf)			
Street Address: 6851 Oak Hall Lane			
City: Columbia State: MD Zip: 21045		Phone: 443-276-1994	Fax #: 443-276-2078

The applicant hereby certifies that all soil erosion and sediment control measures are designed in accordance with current **Standards for Soil Erosion and Sediment Control In New Jersey** and will be installed in accordance with those Standards and the plan as approved by the Soil Conservation District and agrees as follows:

1. To notify the District in writing at least 48 hours in advance of any land disturbance activity. Failure to provide such notification may result in additional inspection fees.
2. To notify the District upon completion of the Project (Note: No certificate of occupancy can be granted until a report of compliance is issued by the District.
3. To maintain a copy of the certified plan on the project site during construction.
4. To allow District agents to go upon project lands for inspection.
5. That any conveyance of this project or portion thereof prior to its completion will transfer full responsibility for compliance with the certified plan to any subsequent owners.
6. To comply with all terms and conditions of this application and certified plan including payment of all fees prescribed by the district fee schedule hereby incorporated by reference.

The applicant hereby acknowledges that structural measures contained in the Soil Erosion and Sediment Control Plan are reviewed for adequacy to reduce offsite soil erosion and sedimentation and not for adequacy of structural design. The applicant shall retain full responsibility for any damages which may result from any construction activity notwithstanding district certification of the subject soil erosion and sedment control plan. It is understood that approval of the plan submitted with this application shall be valid only for the duration of the inital project approval granted by the municipality. All municipal renewals of this project will require submission and approval by the district. In no case shall the approval extend beyond three and one half years at which time resubmission and certification will be required. Soil Erosion and Sediment Control Plan certification is limited to the controls specified in the plan. It is not authorization to engage in the proposed land use unless such use has been previously approved by the municipality or other controlling agency.

1. Applicant Certification* Signature _____ Date _____ Applicant Name (Print) _____	3. Plan determined complete: Signature of District Official _____ Date _____
2. Receipt of fee, plan and supporting documents is hereby acknowledged: Signature of District Official _____ Date _____	4. Plan certified, denied or other actions noted above. Special Remarks: Signature of District Official _____ Date _____

*If other than project owner, written authorization of owner must be attached.

MORRIS COUNTY SOIL CONSERVATION DISTRICT
APPLICATION FOR SOIL EROSION AND SEDIMENT CONTROL PLAN CERTIFICATION

Public Rights-of-Way Included in Project Area:

- Maple Avenue
- Halsey Avenue
- Jackson Avenue
- Ogden Avenue
- Union Street

ADDENDUM

OWNERSHIP DISCLOSURE AFFIDAVIT

APPLICATION BY CORPORATION OR PARTNERSHIP

All applicants for Soil Erosion and Sediment Control Plan Certification are requested to submit a list of project owners on this form for purposes of determining potential conflicts of interest between the applicant and Soil Conservation District Officials. Attach rider in necessary.

A Corporation must also indicate its Registered Agent and Officers.

A Corporation or Partnership applying to the Soil Conservation District for plan certification, or applying for other approvals shall list the names and addresses of all stockholers or individual partners woning at least 10% of its stock of any class, or at least 10% of the interest in the partnership, as the case may be.

This disclosure requirement is continuing during the Certification period. Any transfer of ownership of more than 10% must be disclosed to the district.

Name and Address of Applicant

United States Environmental Protection Agency

290 Broadway, New York, NY 10007

If Corporation: Name and Address of Registered Agent and Officers:

N/A

Stockholders/Partners with more than 10% ownership in the projects:

1. N/A

2.

3.

4.

Sworn to and subscribed before me
this Day of 2000

NOTARY PUBLIC OF NEW JERSEY

Print Name of Authorized Signatory

Authorized Signature/Date

Title

MORRIS COUNTY SOIL CONSERVATION DISTRICT
APPLICATION FOR SOIL EROSION AND SEDIMENT CONTROL PLAN CERTIFICATION

Tab 2 – Application Fees*

1. Morris County Soil Conservation District

The calculated fee for the Rockaway Borough Superfund Site, East Main/Wall Street Plume Remediation Project is based on a disturbance area of 1.15 acres and is calculated as follows:

APPLICATION FEE = Certification Fee + Inspection Fee

= $850 + $175(2.0)

= $1,200

2. NJDEP RFA for Stormwater

APPLICATION FEE = $300.00

Payable to "Treasurer State of New Jersey"

*No payment is included because the project is a Federal Superfund Site. Application fees are not applicable.

MORRIS COUNTY SOIL CONSERVATION DISTRICT
APPLICATION FOR SOIL EROSION AND SEDIMENT CONTROL PLAN CERTIFICATION

Tab 3

Description of Soil Erosion and Sediment Control Plan

&

Drainage Calculations

Soil Erosion and Sediment Control Plan

Introduction

Included as part of this Soil Erosion and Sediment Control Plan is a completed application form and the appropriate fee, a narrative that includes a project description, and one set of engineering drawings and engineering specifications as follows:

- Sheet No. 1: Existing Conditions
- Sheet No. 2: Soil Erosion and Sediment Control Plan
- Sheet No. 3: Force Main/Trench Details
- Sheet No. 4: Soil Erosion and Sediment Control Plan – Enlarged Plan
- Sheet No. 5: Soil Erosion and Sediment Control Notes and Details I
- Sheet No. 6: Soil Erosion and Sediment Control Notes and Details II
- Specification Section 2020; Dewatering
- Specification Section 2200; Site Preparation
- Specification Section 2316; Fill
- Specification Section 2317; Excavation
- Specification Section 2318; Trenching
- Specification Section 2540; Erosion and Sedimentation Control
- Specification Section 2721; Aggregate Base Course
- Specification Section 2740; Flexible Pavement
- Specification Section 2921; Seeding

Site Description

The Rockaway Borough Well Field Site is located in the north central region of New Jersey (see Site Location Map, Tab 4), and encompasses approximately 2.1 square miles. Rockaway Borough obtains its potable water supply from groundwater using three supply wells (GW-1, GW-5, and GW-6). The municipal well field serves approximately 10,000 residents of Rockaway Borough and its surrounding communities at a rate of approximately 1.2 million gallons per day.

The project area (tract area) consists of the location of a proposed groundwater treatment plant and approximately 2,145 feet of proposed pipe/utility trenching and a corresponding 20-foot wide construction work area. The area is comprised of paved public right-of-way (1.65 acres) and three municipal lots (4.24 acres). Two of the municipal lots currently have vegetative cover. In addition, a paved municipal parking lot located west of East Main Street will be utilized for temporary construction facilities and equipment laydown area.

Approximately 864 linear feet of the proposed piping route runs east along Maple Avenue. From the intersection Maple Avenue and Halsey Avenue, the route runs south along Halsey Avenue for 479 feet. From the intersection Halsey Avenue and Jackson Avenue, the route runs east along Jackson Avenue for 431 feet before going north on Union Street for 73 feet to the proposed treatment plant.

No project activities will take place within 150 feet of a wetland.

Project History and Description

The United States Environmental Protection Agency (EPA) issued a Record of Decision in 1991, which called for groundwater extraction of plumes emanating from the Klockner & Klockner (K&K) and the East Main/Wall Street (EM/WS) areas. In 1994, EPA and Thiokol entered into a Consent Decree whereby Thiokol agreed to conduct the remedial design (RD) for both the K&K and EM/WS plumes. Thiokol was additionally required to implement the remedial action (RA) for the K&K area. Responsibility for implementation of the RA for the EM/WS area was given to EPA. The RA for the EM/WS is the project for which this SESC Plan is being submitted.

The project involves the installation of three groundwater extraction wells and vaults, associated underground piping, and a new treatment plant to process the extracted groundwater. The temporary soil erosion and sediment control measures, which will include stabilized construction access, siltation barriers, tree protection, trench protection, and temporary soil stockpile protection, will be completed prior to construction and maintained for the duration of construction pursuant to this plan. Soil erosion and sediment control measures are shown on the included drawings.

Project Completion Time

The proposed project is anticipated to require three and one half months for completion and is expected to begin on approximately August 22, 2007.

Construction Sequence

1. Mobilization to the site;
2. All field engineering and surveying;
3. Installation of all temporary facilities, including design where appropriate, required to stage personnel, equipment and materials necessary to perform the Work;
4. Implementation of erosion, sedimentation, and pollution control measures;

5. Preparation and implementation of a project specific Dewatering Plan;
6. Site preparatory activities, including but not limited to, acquisition of all necessary permits not acquired by the Owner, construction of temporary access roads, installation of temporary fences and gates, and clearing and grubbing;
7. Implementation of all traffic control plans, equipment, materials, and labor required to facilitate the project;
8. Trenching, force main installation, backfilling;
9. Groundwater treatment system (GTS) earthwork/foundation;
10. GTS construction;
11. Underground electrical wiring and connections;
12. Mechanical connections at vault locations;
13. Inspection and testing of force main;
14. Pre-final inspection of GTS;
15. Final inspection of GTS;
16. Startup/commissioning;
17. Miscellaneous work and cleanup;
18. Demobilization from the site.

Drainage Areas on Site

The soils of the project site and surrounding area are shown on the attached Natural Resources Conservation Service Web Soil Survey, which is an excerpt from the U.S. Department of Agriculture Soil Survey of Morris County. The project area encompasses two main soil types, which are described below.

Urban land – Rockaway Complex (USROCC), 3 to 15 percent slopes. This complex consists of well-drained, gently sloping gravelly sandy loam soils. It is mainly in upland areas of intensive residential or industrial development. The soil material is cobbly and stony glacial till that is mainly granitic material that contains a small amount of various other kinds of rock. This complex is about 50 percent soils that have been disturbed by man to the extent that the original profile no longer remains and 40 percent Rockaway soils. Making up the remaining percentage are small areas of Netcong and Hibernia soils. This complex is generally deep over a water table, has rapid runoff and a moderate hazard of erosion, and is likely to have lateral seepage of water on top of the fragipan. In places where excavation has exposed the fragipan, seepage of water to the surface on top of the fragipan is common and causes unstable slopes and a hazard of erosion. Moderate measures are needed to control erosion and runoff. Suitable practices include using diversions, interceptor drains, and a grass cover.

Urban land – Rockaway Complex (USROCD), 15 to 25 percent slopes. This complex is in areas of steep, well-drained gravelly or stony sandy loam soils. It is in upland areas of residential developments. The soil material is cobbly and stony glacial till that is mainly granitic gneiss. This complex is about 50 percent soils that have been

disturbed by man to the extent that the original profile no longer remains and 40 percent Rockaway soils. Making up the remaining percentage are small areas of bouldery Rockaway soils, Netcong and Hibernia soils, or areas of bedrock outcrop. Most areas have been cut and filled for use as construction sites.

The single drainage area defined for purposes of peak drainage calculations is the area where the treatment plant will be constructed, generally Block 14 Lot 18. It has an area of approximately 7,718 ft^2 and contains a pump house taking up approximately 184 ft^2. The present pervious area is 7,534 ft^2. The area of the proposed treatment building is approximately 848 ft^2, so the pervious area after development will be 6,686 ft^2.

The size of the drainage area will not change; however there will be new impervious surfaces added as a result of this project, so peak drainage calculations for present and post-development conditions are included.

The 24-hour rainfall distribution (from TR-55) for the site is as follows:

2-year storm	3.0 inches
10-year storm	5.0 inches
100-year storm	7.0 inches

Peak discharge for present and developed (after construction of treatment building) conditions were computed by hand using the TR-55 Method provided by the U.S. Department of Agriculture. As shown on the attached drainage calculations, there is no appreciable increase in the amount of runoff as a result of the proposed construction. The following table summarizes the results of the drainage volume calculations, which are included as worksheet attachments:

Storm Frequency	2-year	10-year	100-year
Present conditions (ft^3/second)	0.12	0.33	0.58
Post-development conditions (ft^3/second)	0.14	0.36	0.62
Difference (ft^3/second)	*0.02*	*0.03*	*0.04*

Trenching and underground piping installation areas are not included in this analysis because these areas are being restored to pre-construction conditions.

References

The following references were used for the preparation of this Soil Erosion and Sediment Control Plan:

- Natural Resources Conservation Service, United States Department of Agriculture. Web Soil Survey 1.1 [Online WWW]. Available URL: "http://websoilsurvey.nrcs.usda.gov" [Accessed 21 May 2007].

- Soil Survey of Morris County, New Jersey. United States Department of Agriculture Soil Conservation Service, 1976.
- Standards for Soil Erosion and Sediment Control in New Jersey.
- Technical Release-55: Urban Hydrology for Small Watersheds, Natural Resources Conservation Service, USDA, June 1986.

SOIL SURVEY OF MORRIS COUNTY, NEW JERSEY

Soil Survey of Project Area

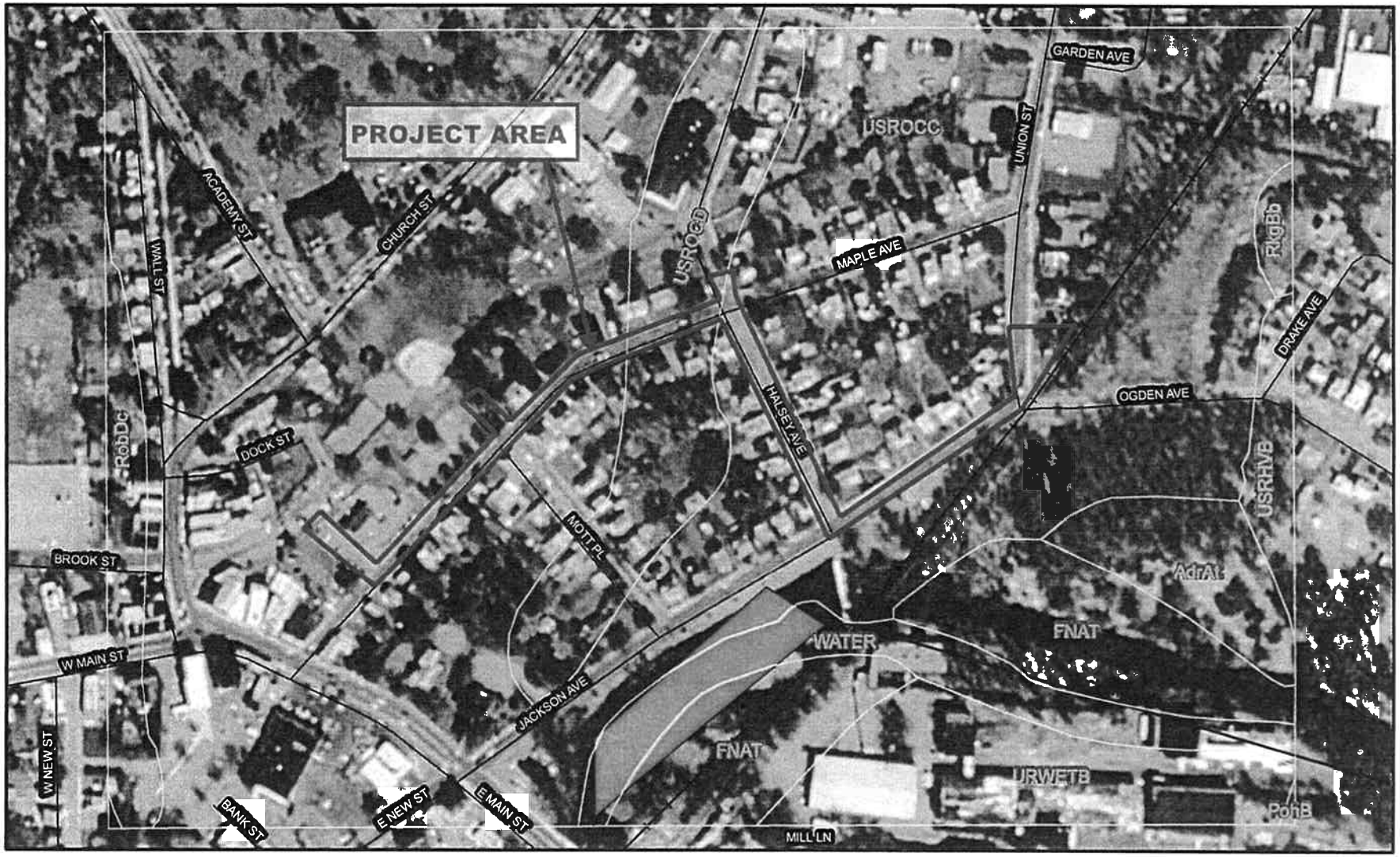

Meters: 0 35 70 140

Feet: 0 100 200 400 600 800

Soil Survey of Project Area

MAP LEGEND

- Soil Map Units
- Interstate Highways
- Roads
- Rails
- Water
- Hydrography
- Oceans
- Escarpment, bedrock
- Escarpment, non-bedrock
- Gulley
- Levee
- Slope
- Blowout
- Borrow Pit
- Clay Spot
- Depression, closed
- Eroded Spot
- Gravel Pit
- Gravelly Spot
- Gulley
- Lava Flow
- Landfill
- Marsh or Swamp
- Miscellaneous Water
- Rock Outcrop
- Saline Spot
- Sandy Spot
- Slide or Slip
- Sinkhole
- Sodic Spot
- Spoil Area
- Stony Spot
- Very Stony Spot
- Perennial Water
- Wet Spot

MAP INFORMATION

Source of Map: Natural Resources Conservation Service
Web Soil Survey URL: http://websoilsurvey.nrcs.usda.gov

Coordinate System: UTM Zone 18

Soil Survey Area: Morris County, New Jersey
Spatial Version of Data: 1
Soil Map Compilation Scale: 1:24000

Map comprised of aerial images photographed on these dates:
4/10/1997

The orthophoto or other base map on which the soil lines were compiled and digitized probably differs from the background imagery displayed on these maps. As a result, some minor shifting of map unit boundaries may be evident.

Map Unit Legend Summary

Morris County, New Jersey

Map Unit Symbol	Map Unit Name	Acres in AOI	Percent of AOI
AdrAt	Adrian muck, 0 to 3 percent slopes, frequently flooded	2.0	2.5
FNAT	Fluvaquents and udifluvents, 0 to 3 percent slopes, frequently flooded	5.7	7.1
PohB	Pompton sandy loam, 3 to 8 percent slopes	0.0	0.0
RkgBb	Ridgebury loam, 0 to 8 percent slopes, very stony	0.3	0.4
RobDc	Rockaway sandy loam, 15 to 25 percent slopes, extremely stony	1.8	2.2
URWETB	Urban land, wet substratum, 0 to 8 percent slopes (SSURGO!)	4.0	5.0
USRHVB	Urban land-Riverhead complex, 3 to 8 percent slopes	1.0	1.2
USROCC	Urban land-Rockaway complex, 3 to 15 percent slopes	56.9	70.9
USROCD	Urban land-Rockaway complex, 15 to 25 percent slopes	5.7	7.1
WATER	Water	2.8	3.5

Rockaway Borough Superfund Site
Soil Erosion and Sediment Control Plan

Drainage Calculations – Groundwater Treatment System Location

1. Calculate areas (using Adobe Acrobat area tool)
   - lot = 7,718 ft^2
   - existing pump house (impervious area) = 184 ft^2
   - proposed treatment building (impervious area) = 848 ft^2

2. Calculate peak runoff (Q) for 2, 10, and 100-yr. storms (see Worksheet 2)
   - for both present and developed lots

3. Calculate T_t
   - assume sheet flow since length of lot is < 300 ft.
   - assume flow length (L) of 144 ft. for the present lot (sloping from south to northeast)
   - for developed lot, assume flow length (L) of 162 ft., since water will have to flow around the treatment building.

4. Calculate peak discharge (q_p)
   - for both present and developed lots
   - define the drainage area as the lot only
   - existing pump house = 184 ft^2
   - proposed treatment building (impervious area) = 848 ft^2

5. Results
   - increase in peak discharge is very small (<.05 ft^3/sec in all storm cases)
   - no drainage handling measures are necessary.

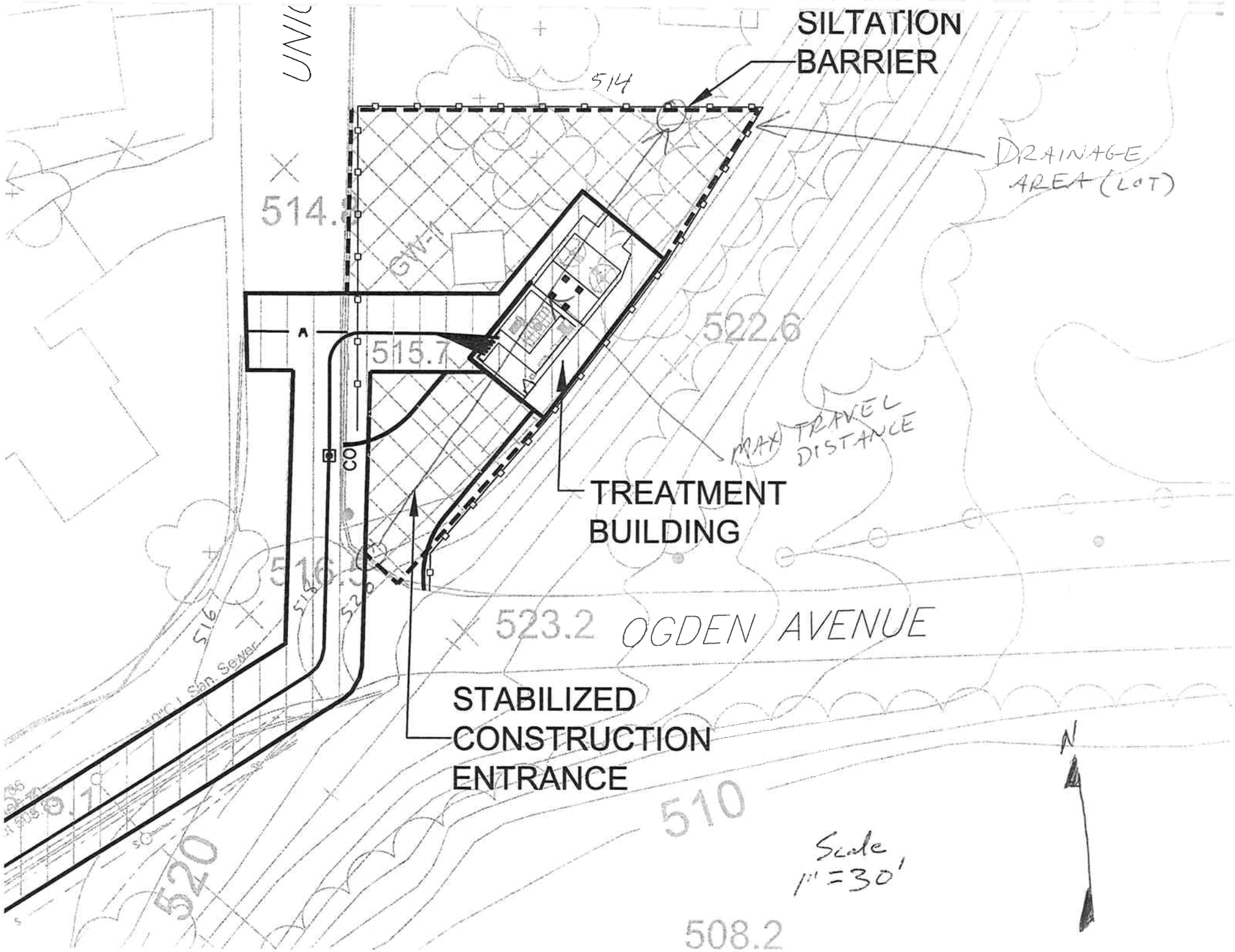
SILTATION BARRIER
DRAINAGE AREA (LOT)
MAX TRAVEL DISTANCE
TREATMENT BUILDING
STABILIZED CONSTRUCTION ENTRANCE
OGDEN AVENUE
514
514.6
515.7
522.6
516.5
523.2
510
520
508.2
GW-1
CO
Scale 1" = 30'
N

Worksheet 2: Runoff curve number and runoff

Project	By	Date
Rockaway Borough Superfund Site	JVB	5/23/07
Location	**Checked**	**Date**
Rockaway Borough, NJ	CJ	5/23/07

Check one: [X] Present [ ] Developed

1. Runoff curve number

Soil name and hydrologic group (appendix A)	Cover description (cover type, treatment, and hydrologic condition; percent impervious; unconnected/connected impervious area ratio)	CN 1/ Table 2-2	CN 1/ Figure 2-3	CN 1/ Figure 2-4	Area [ ] acres [ ] mi² [X] %	Product of CN x area
Rockaway, C	Open Space, good condition	74			97.6	7222
Rockaway, C	Roof	98			2.4	235
	Totals				100	7457

1/ Use only one CN source per line

CN (weighted) = $\frac{\text{total product}}{\text{total area}} = \frac{7457}{100} = 74.6$; Use CN ➡ 75

2. Runoff

		Storm #1	Storm #2	Storm #3
Frequency	yr	2	10	100
Rainfall, P (24-hour)	in	3	5	7
Runoff, Q	in	0.96	2.45	4.15

(Use P and CN with table 2-1, figure 2-1, or equations 2-3 and 2-4)

Worksheet 2: Runoff curve number and runoff

Project	By	Date
Rockaway Borough Superfund Site	JVB	5/23/07
Location	**Checked**	**Date**
Rockaway Borough, NJ	CJ	5/23/07

Check one: ☐ Present ☒ Developed

1. Runoff curve number

Soil name and hydrologic group (appendix A)	Cover description (cover type, treatment, and hydrologic condition; percent impervious; unconnected/connected impervious area ratio)	CN 1/ Table 2-2	CN 1/ Figure 2-3	CN 1/ Figure 2-4	Area ☐ acres ☐ mi² ☒ %	Product of CN x area
Rockaway, C	Open Space, good condition	74			87	6438
Rockaway, C	Roof, paving	98			13	1274
					Totals ➡ 100	7712

1/ Use only one CN source per line

CN (weighted) = $\frac{\text{total product}}{\text{total area}} = \frac{7712}{100} = 77.1$; **Use CN** ➡ 77

2. Runoff

		Storm #1	Storm #2	Storm #3
Frequency	yr	2	10	100
Rainfall, P (24-hour)	in	3	5	7
Runoff, Q	in	1.08	2.63	4.37

(Use P and CN with table 2-1, figure 2-1, or equations 2-3 and 2-4)

Worksheet 3: Time of Concentration (T_c) or travel time (T_t)

Project	By	Date
Rockaway Borough Superfund Site	JVB	5/23/07
Location	**Checked**	**Date**
Rockaway Borough, NJ	CJ	5/23/07

Check one: [X] Present [ ] Developed

Check one: [ ] T_c [X] T_t through subarea

Notes: Space for as many as two segments per flow type can be used for each worksheet. Include a map, schematic, or description of flow segments.

Sheet flow (Applicable to Tc only)

	Segment ID		
1. Surface description (table 3-1)	AB		
2. Manning's roughness coefficient, n (table 3-1)	Dense grass		
3. Flow length, L (total L † 300 ft) ft	0.24		
4. Two-year 24-hour rainfall, P_2 in	144		
5. Land slope, s ft/ft	3		
6. $T_t = \frac{0.007\ (nL)^{0.8}}{P_2^{0.5}\ s^{0.4}}$ Compute T_t hr	0.028		
	0.287	+	= 0.29

Shallow concentrated flow

	Segment ID		
7. Surface description (paved or unpaved)			
8. Flow length, L ft			
9. Watercourse slope, s ft/ft			
10. Average velocity, V (figure 3-1) ft/s			
11. $T_t = \frac{L}{3600\ V}$ Compute T_t hr		+	=

Channel flow

	Segment ID		
12. Cross sectional flow area, a ft^2			
13. Wetted perimeter, p_w ft			
14. Hydraulic radius, $r = \frac{a}{p_w}$ Compute r ft			
15 Channel slope, s ft/ft			
16. Manning's roughness coefficient, n			
17. $V = \frac{1.49\ r^{2/3}\ s^{1/2}}{n}$ Compute V ft/s			
18. Flow length, L ft			
19. $T_t = \frac{L}{3600\ V}$ Compute T_t hr		+	=

20. Watershed or subarea T_c or T_t (add T_t in steps 6, 11, and 19) Hr 0.29

Worksheet 3: Time of Concentration (T_c) or travel time (T_t)

Project	By	Date
Rockaway Borough Superfund Site	JVB	5/23/07
Location	**Checked**	**Date**
Rockaway Borough, NJ	CJ	5/23/07

Check one: ☐ Present ☒ Developed

Check one: ☐ T_c ☒ T_t through subarea

Notes: Space for as many as two segments per flow type can be used for each worksheet. Include a map, schematic, or description of flow segments.

Sheet flow (Applicable to Tc only)

	Segment ID		
1. Surface description (table 3-1)	AB		
2. Manning's roughness coefficient, n (table 3-1)	Dense grass		
3. Flow length, L (total L † 300 ft) ft	0.24		
4. Two-year 24-hour rainfall, P_2 in	162		
5. Land slope, s ft/ft	3		
6. $T_t = \frac{0.007\ (nL)^{0.8}}{P_2^{0.5}\ s^{0.4}}$ Compute T_t hr	0.028		
	0.316	+	= 0.32

Shallow concentrated flow

	Segment ID		
7. Surface description (paved or unpaved)			
8. Flow length, L ft			
9. Watercourse slope, s ft/ft			
10. Average velocity, V (figure 3-1) ft/s			
11. $T_t = \frac{L}{3600\ V}$ Compute T_t hr		+	=

Channel flow

	Segment ID		
12. Cross sectional flow area, a ft^2			
13. Wetted perimeter, p_w ft			
14. Hydraulic radius, $r = \frac{a}{p_w}$ Compute r ft			
15 Channel slope, s ft/ft			
16. Manning's roughness coefficient, n			
17. $V = \frac{1.49\ r^{2/3}\ s^{1/2}}{n}$ Compute V ft/s			
18. Flow length, L ft			
19. $T_t = \frac{L}{3600\ V}$ Compute T_t hr		+	=

20. Watershed or subarea T_c or T_t (add T_t in steps 6, 11, and 19) Hr 0.32

Worksheet 4: Graphical Peak Discharge method

Project	By	Date
Rockaway Borough Superfund Site	JVB	5/23/07
Location	**Checked**	**Date**
Rockaway Borough, NJ	CJ	5/23/07

Check one: [x] Present [ ] Developed

1. Data

Drainage area ..... A_m = 0.000277 mi^2 (acres/640)

Runoff curve number .....CN = 75 (From worksheet 2)

Time of concentration ..... T_c = 0.29 hr (From worksheet 3)

Rainfall distribution ..... = III (I, IA, II III)

Pond and swamp areas sprea
throughout watershed ..... = 0 percent of A_m (_____ acres or mi^2 covered)

	Storm #1	Storm #2	Storm #3
2. Frequency ..... yr	2	10	100
3. Rainfall, P (24-hour) ..... in	3	5	7
4. Initial abstraction, I_a ..... in (Use CN with table 4-1)	0.667	0.667	0.667
5. Compute I_a/P	0.222	0.133	0.095
6. Unit peak discharge, q_u ..... csm/in (Use T_c and I_a/P with exhibit 4– III)	460	485	505
7. Runoff, Q ..... in (From worksheet 2) Figure 2-6	0.96	2.45	4.15
8. Pond and swamp adjustment factor, F_p ..... (Use percent pond and swamp area with table 4-2. Factor is 1.0 for zero percent pond ans swamp area.)	1	1	1
9. Peak discharge, q_p ..... ft^3/s	0.122	0.329	0.581

(Where $q_p = q_u A_m Q F_p$)

Worksheet 4: Graphical Peak Discharge method

Project	By	Date
Rockaway Borough Superfund Site	JVB	5/23/07
Location	**Checked**	**Date**
Rockaway Borough, NJ	CJ	5/23/07

Check one: ☐ Present ☒ Developed

1. Data

Drainage area ..... A_m = 0.000277 mi^2 (acres/640)

Runoff curve number .....CN = 77 (From worksheet 2)

Time of concentration ..... T_c = 0.32 hr (From worksheet 3)

Rainfall distribution ..... = III (I, IA, II III)

Pond and swamp areas sprea
throughout watershed ..... = 0 percent of A_m (_____ acres or mi^2 covered)

	Storm #1	Storm #2	Storm #3
2. Frequency ..... yr	2	10	100
3. Rainfall, P (24-hour) ..... in	3	5	7
4. Initial abstraction, I_a ..... in (Use CN with table 4-1)	0.597	0.597	0.597
5. Compute I_a/P	0.199	0.119	0.085
6. Unit peak discharge, q_u ..... csm/in (Use T_c and I_a/P with exhibit 4– III)	450	475	5
7. Runoff, Q ..... in (From worksheet 2) Figure 2-6	1.08	2.63	4.37
8. Pond and swamp adjustment factor, F_p ..... (Use percent pond and swamp area with table 4-2. Factor is 1.0 for zero percent pond ans swamp area.)	1	1	1
9. Peak discharge, q_p ..... ft^3/s	0.135	0.346	0.611

(Where $q_p = q_u A_m Q F_p$)

MORRIS COUNTY SOIL CONSERVATION DISTRICT
APPLICATION FOR SOIL EROSION AND SEDIMENT CONTROL PLAN CERTIFICATION

Tab 4

Site Location Map

&

FEMA Floodplain Map

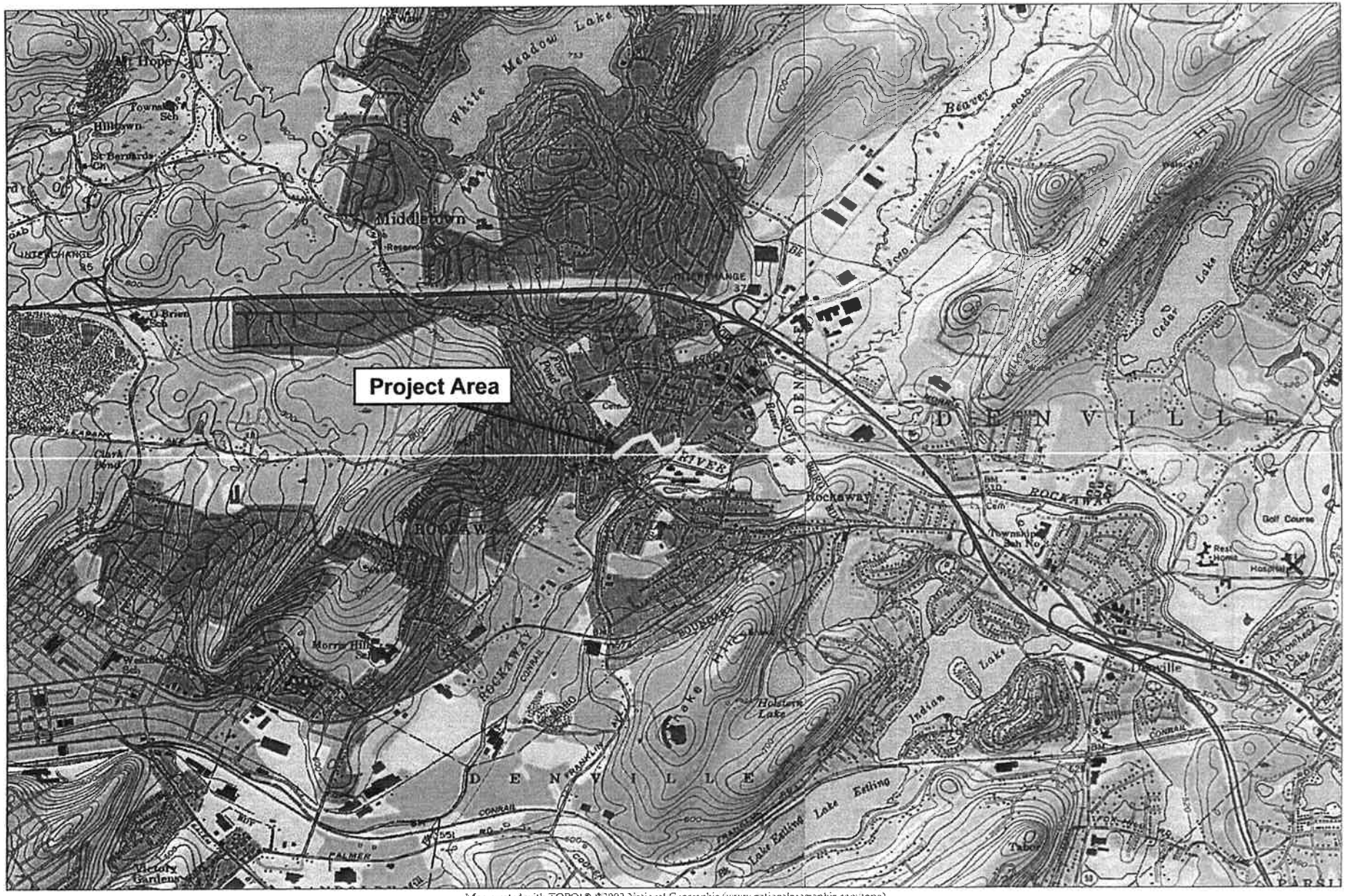

Map created with TOPO!® ©2002 National Geographic (www.nationalgeographic.com/topo)

Figure 1
Site Location Map
Rockaway Borough Superfund Site
East Main/Wall Street Plume Remediation
Morris County, NJ

CDM

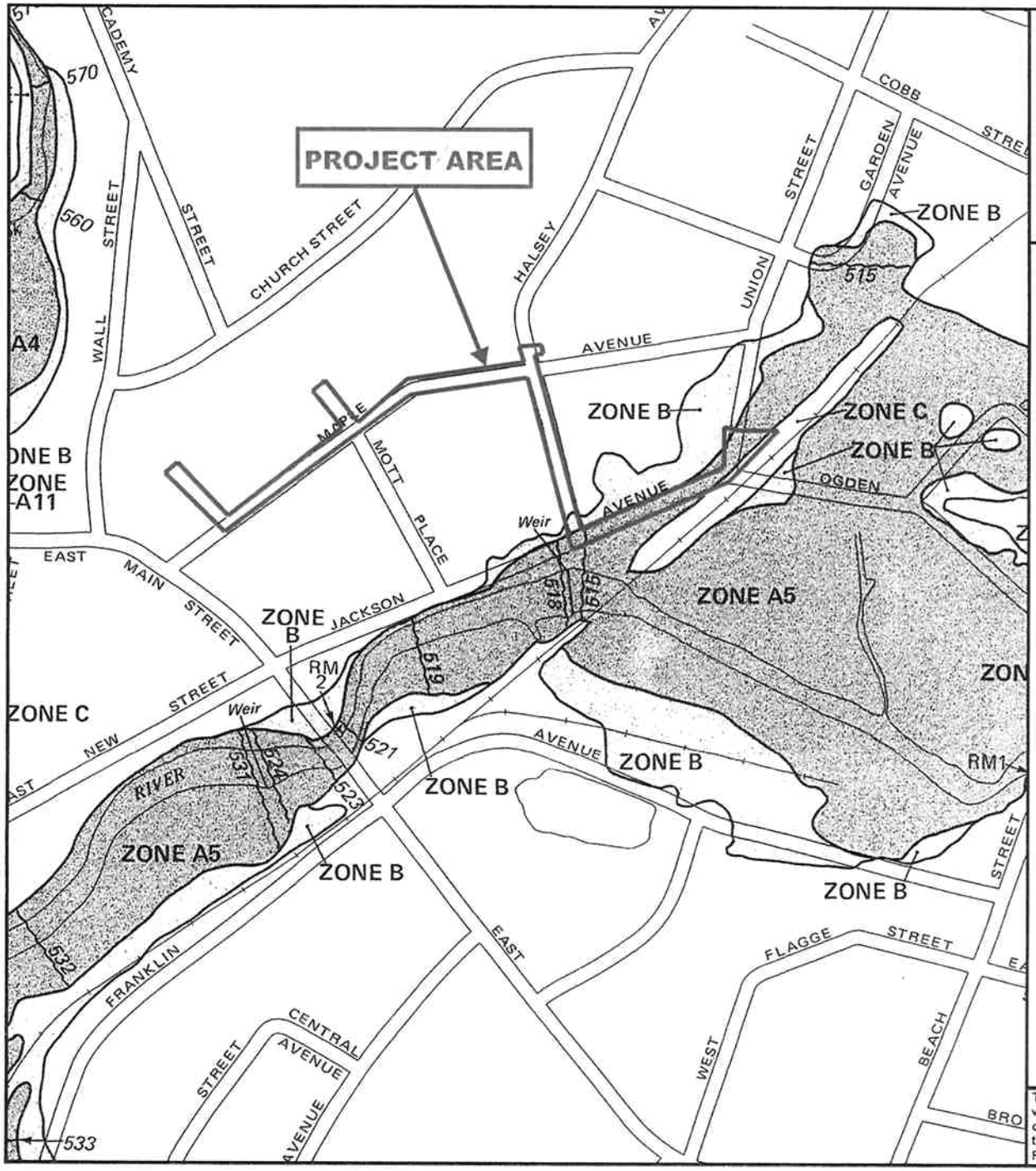

APPROXIMATE SCALE

400 0 400 FEET

NATIONAL FLOOD INSURANCE PROGRAM

FIRM

FLOOD INSURANCE RATE MAP

BOROUGH OF
ROCKAWAY,
NEW JERSEY
MORRIS COUNTY

ONLY PANEL PRINTED

COMMUNITY-PANEL NUMBER
345315 0001 B

MAP REVISED:
JUNE 19, 1985

Federal Emergency Management Agency

This is an official copy of a portion of the above referenced flood map. It was extracted using F-MIT On-Line. This map does not reflect changes or amendments which may have been made subsequent to the date on the title block. For the latest product information about National Flood Insurance Program flood maps check the FEMA Flood Map Store at www.msc.fema.gov

KEY TO MAP

500-Year Flood Boundary	ZONE B
100-Year Flood Boundary	
Zone Designations*	ZONE A1 … ZONE A5
100-Year Flood Boundary	
500-Year Flood Boundary	ZONE B
Base Flood Elevation Line With Elevation In Feet**	513
Base Flood Elevation in Feet Where Uniform Within Zone**	(EL 987)
Elevation Reference Mark	RM7×
Zone D Boundary	
River Mile	•M1.5

**Referenced to the National Geodetic Vertical Datum of 1929

*EXPLANATION OF ZONE DESIGNATIONS

ZONE	EXPLANATION
A	Areas of 100-year flood; base flood elevations and flood hazard factors not determined.
A0	Areas of 100-year shallow flooding where depths are between one (1) and three (3) feet; average depths of inundation are shown, but no flood hazard factors are determined.
AH	Areas of 100-year shallow flooding where depths are between one (1) and three (3) feet; base flood elevations are shown, but no flood hazard factors are determined.
A1-A30	Areas of 100-year flood; base flood elevations and flood hazard factors determined.
A99	Areas of 100-year flood to be protected by flood protection system under construction; base flood elevations and flood hazard factors not determined.
B	Areas between limits of the 100-year flood and 500-year flood; or certain areas subject to 100-year flooding with average depths less than one (1) foot or where the contributing drainage area is less than one square mile; or areas protected by levees from the base flood. (Medium shading)
C	Areas of minimal flooding. (No shading)
D	Areas of undetermined, but possible, flood hazards.
V	Areas of 100-year coastal flood with velocity (wave action); base flood elevations and flood hazard factors not determined.

APPROXIMATE SCALE

400 0 400 FEET

NATIONAL FLOOD INSURANCE PROGRAM

FIRM
FLOOD INSURANCE RATE MAP

BOROUGH OF
ROCKAWAY,
NEW JERSEY
MORRIS COUNTY

ONLY PANEL PRINTED

COMMUNITY-PANEL NUMBER
345315 0001 B

MAP REVISED:
JUNE 19, 1985

Federal Emergency Management Agency

This is an official copy of a portion of the above referenced flood map. It was extracted using F-MIT On-Line. This map does not reflect changes or amendments which may have been made subsequent to the date on the title block. For the latest product information about National Flood Insurance Program flood maps check the FEMA Flood Map Store at www.msc.fema.gov

MORRIS COUNTY SOIL CONSERVATION DISTRICT
APPLICATION FOR SOIL EROSION AND SEDIMENT CONTROL PLAN CERTIFICATION

Tab 5 – Soil Erosion and Sediment Control Plan and Details

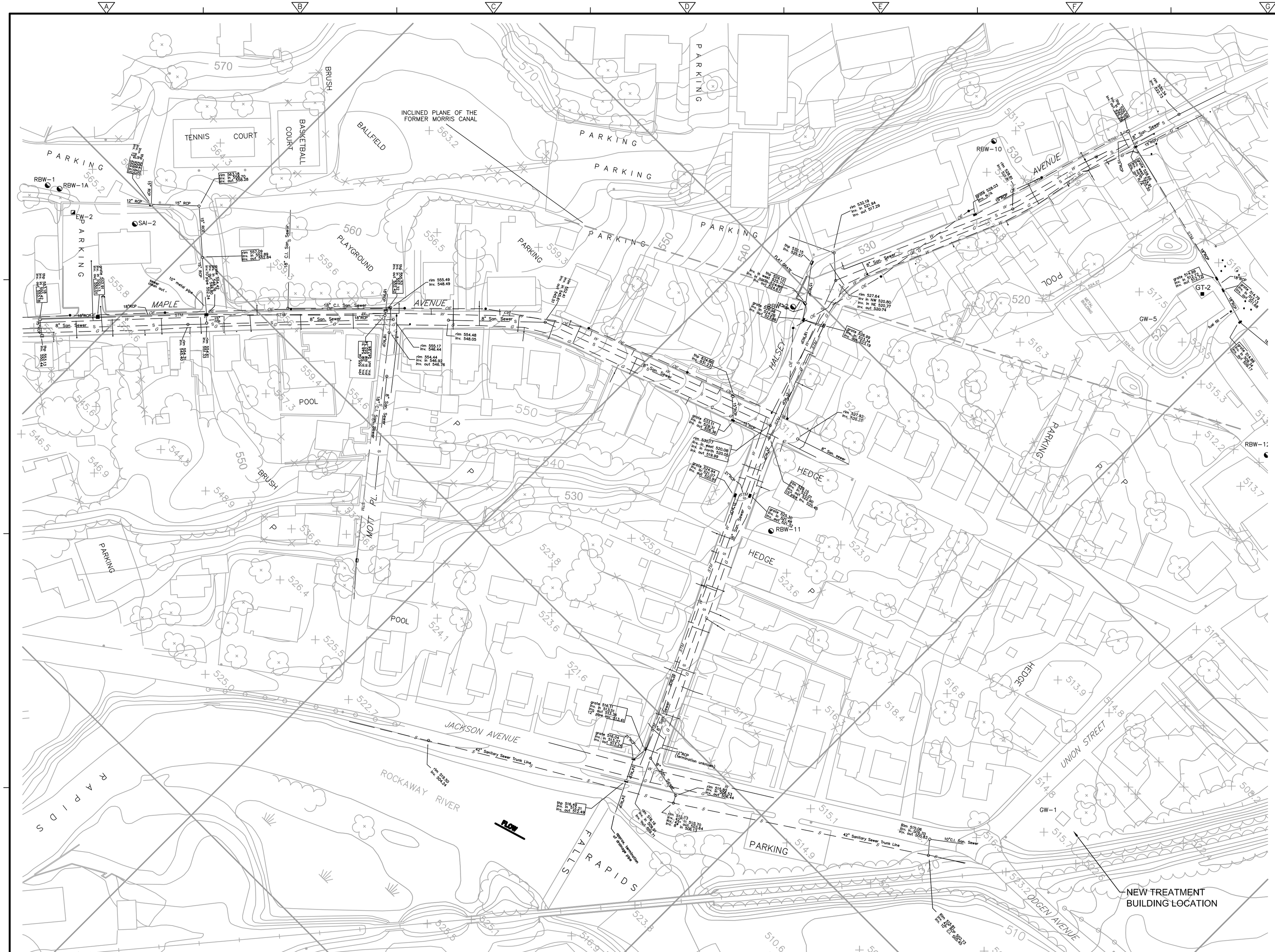

LEGEND

- FENCE LINE
- POWER POLE
- MONITORING WELL LOCATION
- EXTRACTION WELL LOCATION
- WATER LINE
- GAS LINE
- SANITARY SEWER LINE
- STORM SEWER
- OVERHEAD ELECTRICAL LINE
- SOIL BORING LOCATION

1" = 60'

30 0 60

DEMETRIOS KLERIDES
PROFESSIONAL ENGINEER
NEW JERSEY LICENSE NO. GE 40679

REV. NO.	DATE	DRWN	CHKD	REMARKS

DESIGNED BY: JVB
DRAWN BY: EJL
SHEET CHK'D BY: JVB
CROSS CHK'D BY: MP
APPROVED BY: DK
DATE: JUNE 2007

CDM
Camp Dresser & McKee
Raritan Plaza I, Raritan Center
Edison, New Jersey 08818
Tel: (732) 225-7000
consulting • engineering • construction • operations

U.S. ARMY CORPS OF ENGINEERS
KANSAS CITY DISTRICT

ROCKAWAY BOROUGH SUPERFUND SITE
EAST MAIN/WALL STREET PLUME REMEDIATION

EXISTING SITE CONDITIONS

PROJECT NO. 56540-6170
FILE NAME:
SHEET NO. 1

J:\56540\6170\CIVL\ 19017-40(008)CI-NF001 06/06/07 17:13 larsone; XREFS: CDM_2234

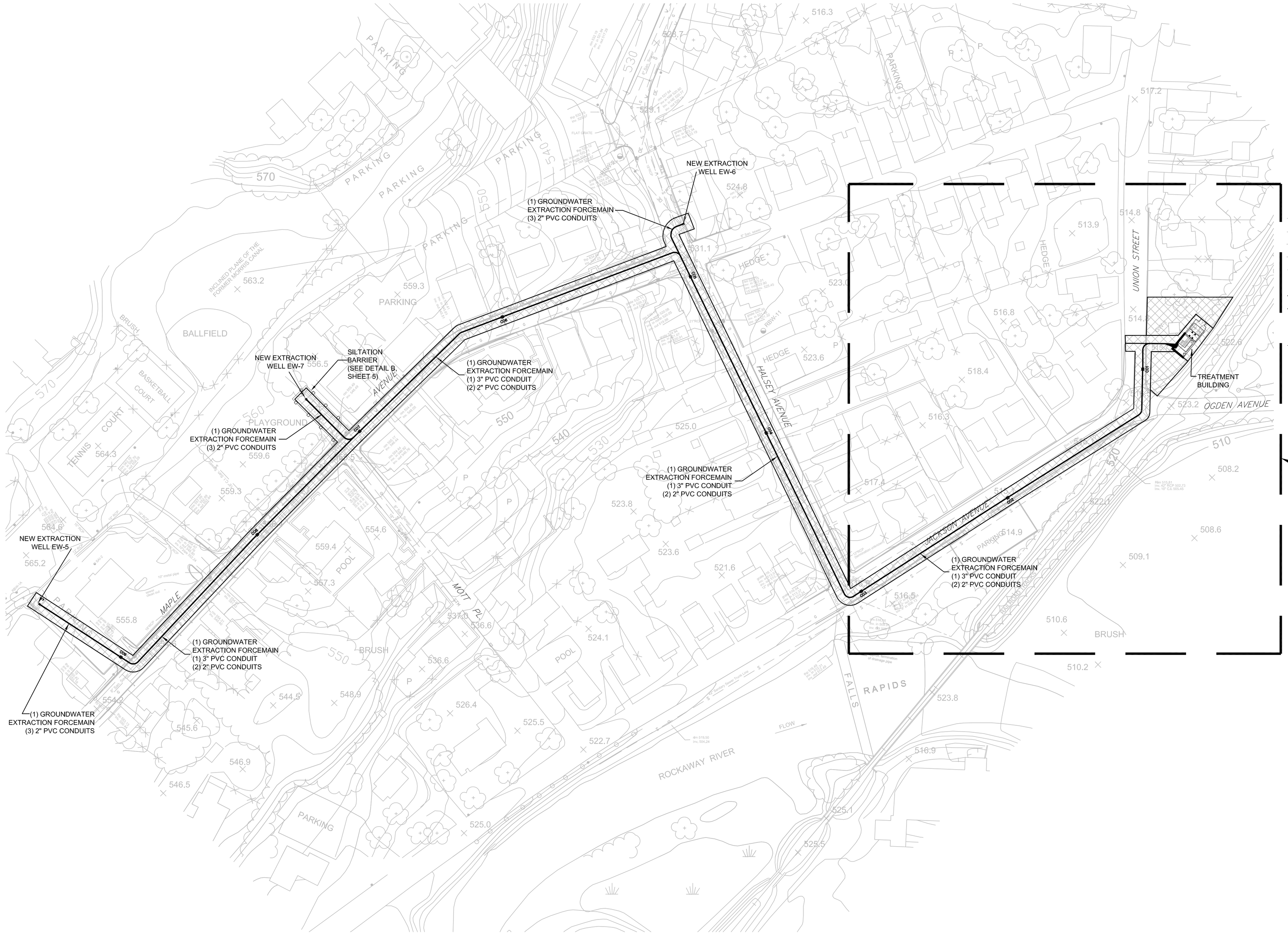

LEGEND

- FENCE LINE
- POWER POLE
- MONITORING WELL LOCATION
- EXTRACTION WELL LOCATION
- WATER LINE
- GAS LINE
- SANITARY SEWER LINE
- STORM SEWER
- OVERHEAD ELECTRICAL LINE
- CO1 CLEANOUT LOCATION
- NEW FORCEMAIN LINE
- NEW DISCHARGE LINE
- LIMITS OF DISTURBANCE
- SILTATION BARRIER

DEMETRIOS KLERIDES
PROFESSIONAL ENGINEER
NEW JERSEY LICENSE NO. GE 40679

REV. NO.	DATE	DRWN	CHKD	REMARKS

DESIGNED BY: JVB
DRAWN BY: EJL
SHEET CHK'D BY: JVB
CROSS CHK'D BY: MP
APPROVED BY: DK
DATE: JUNE 2007

CDM
Camp Dresser & McKee
Raritan Plaza I, Raritan Center
Edison, New Jersey 08818
Tel: (732) 225-7000
consulting • engineering • construction • operations

U.S. ARMY CORPS OF ENGINEERS
KANSAS CITY DISTRICT

ROCKAWAY BOROUGH SUPERFUND SITE
EAST MAIN/WALL STREET PLUME REMEDIATION

SOIL EROSION AND SEDIMENT CONTROL PLAN

PROJECT NO. 56540-6170
FILE NAME:
SHEET NO. **2**

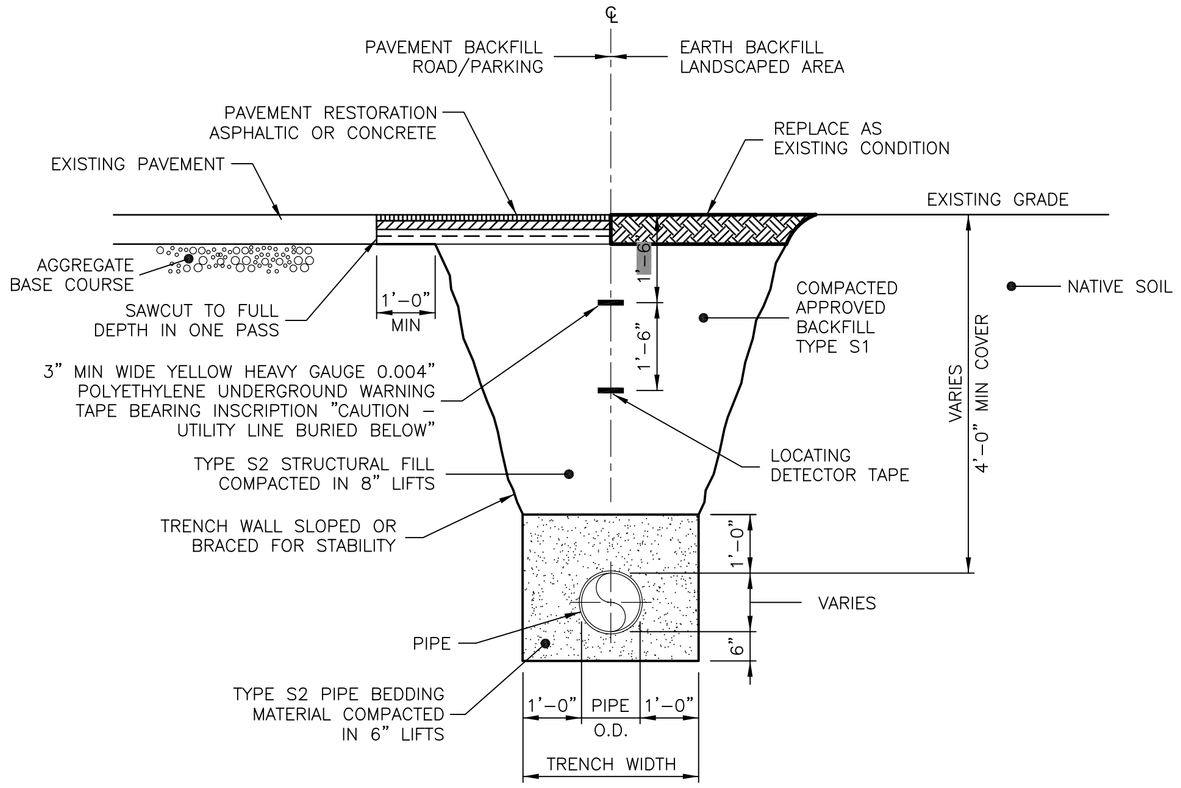

TYPICAL UTILITY TRENCH

NTS

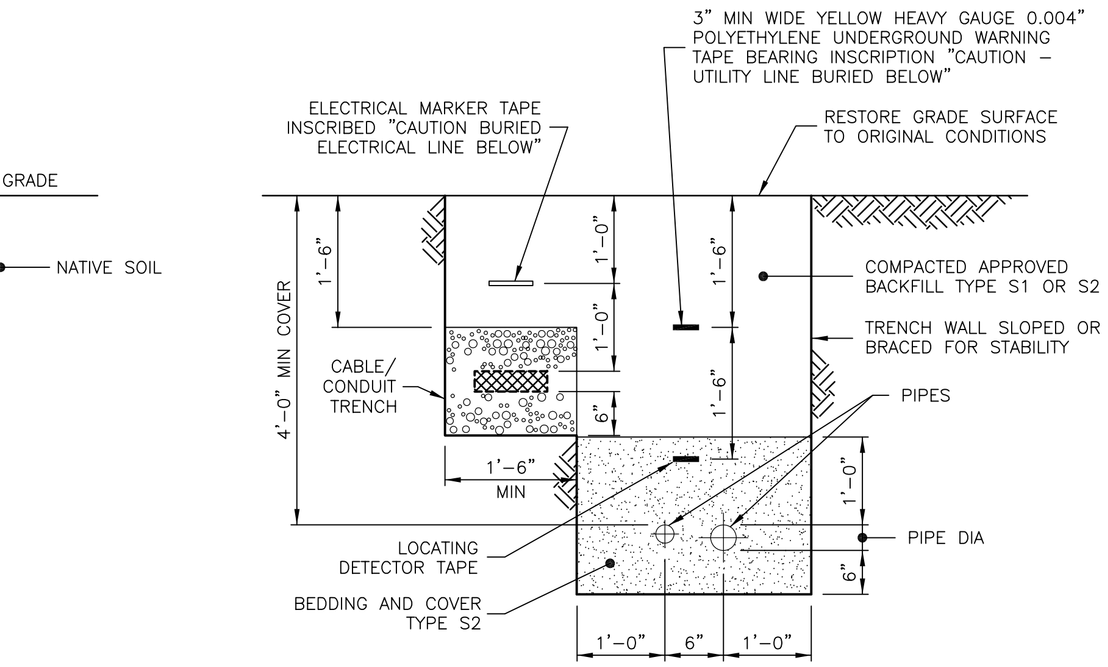

TYPICAL PIPE AND CABLE/CONDUIT TRENCH

NTS

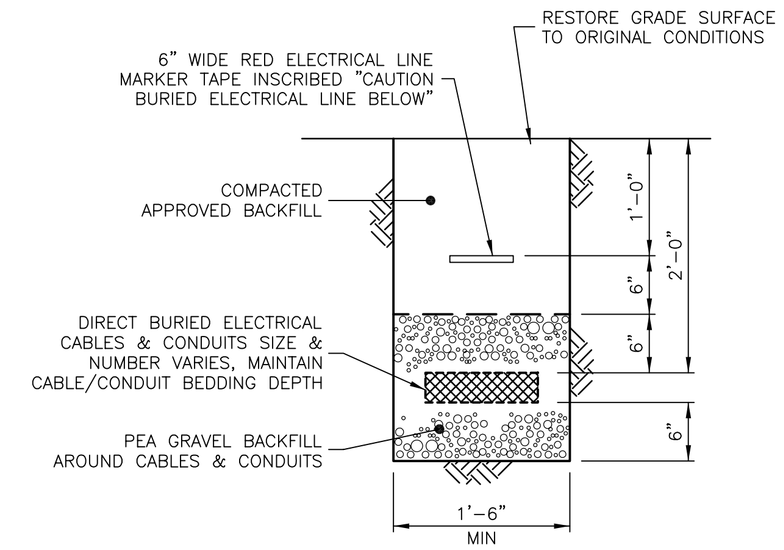

TYPICAL CABLE/CONDUIT TRENCH

NTS

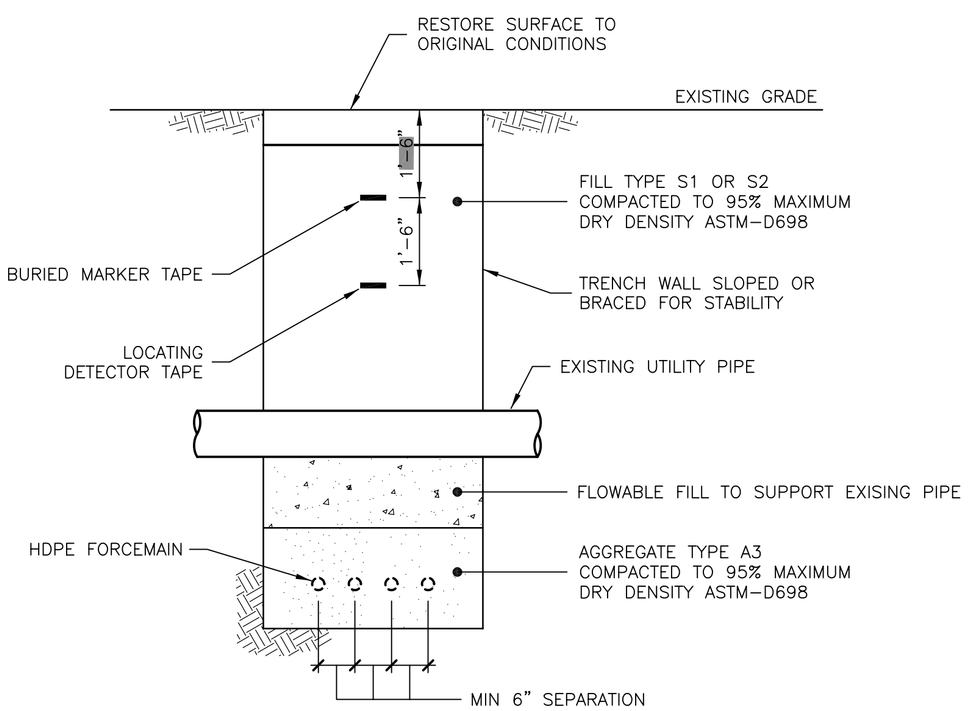

PIPE SUPPORT FOR EXISTING UTILITY

NTS

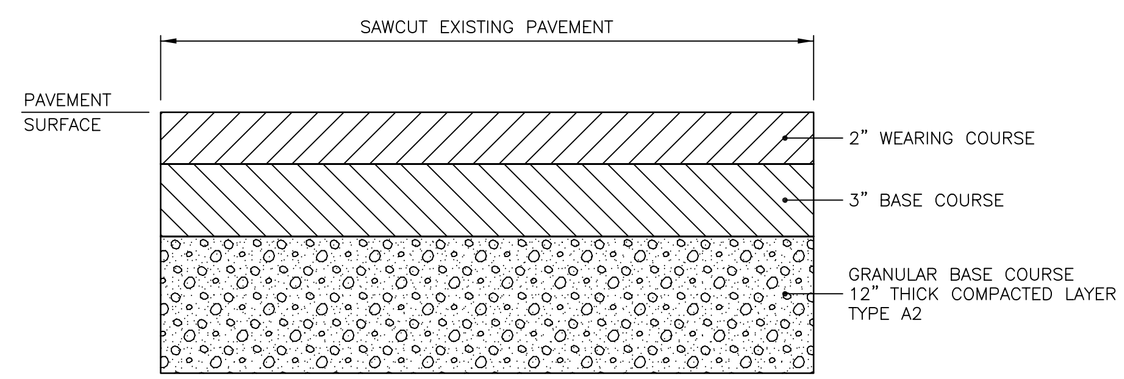

ROAD RESTORATION

NTS

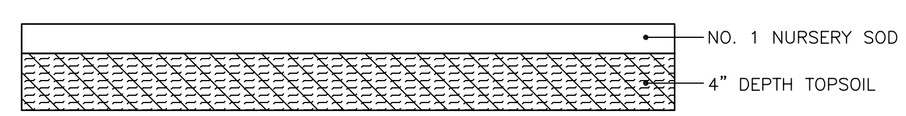

GRASSED AREA RESTORATION

NTS

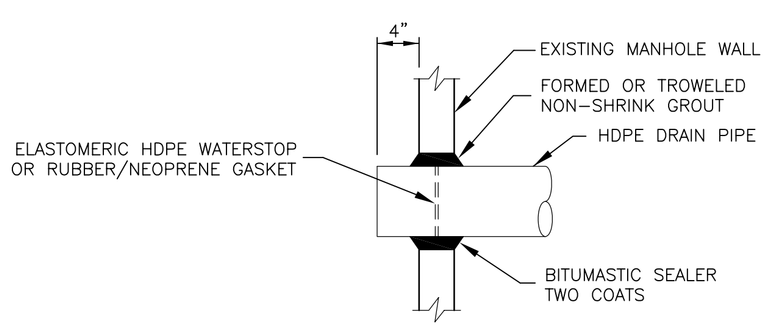

CONTRACTOR MAY USE A-LOK COMPRESSION TYPE FLEXIBLE CONNECTOR INSTALLED PER MANUFACTURER'S REQUIREMENTS

NEW SEWER CONNECTION TO EXISTING MANHOLE

NTS

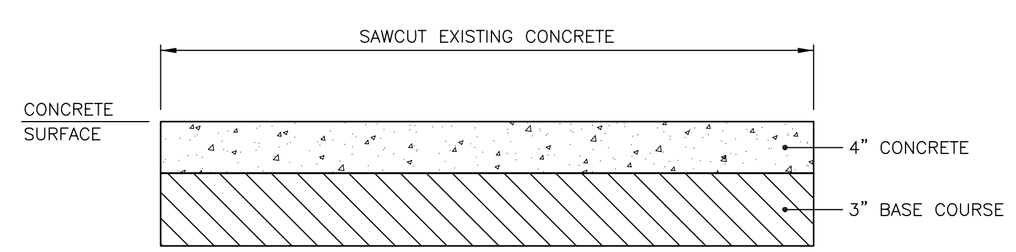

SIDEWALK RESTORATION

NTS

NOTES

1. TRENCH WITH THREE OR MORE PIPES SHALL BE SIMILAR TO THE TWO-PIPE TRENCH DETAIL SHOWN. EACH PIPE SHALL BE SEPARATED BY 6-INCH ON CENTER HORIZONTALLY. VERTICAL PIPE SEPARATION (DISTANCE BETWEEN INVERTS) SHALL BE 6-INCHES MINIMUM.
2. REFER TO MECHANICAL DRAWINGS FOR VALVE AND PIPING REQUIREMENTS.
3. REFER TO ELECTRICAL DRAWINGS FOR CONDUIT AND PULL BOX REQUIREMENTS.

DEMETRIOS KLERIDES
PROFESSIONAL ENGINEER
NEW JERSEY LICENSE NO. GE 40679

REV. NO.	DATE	DRWN	CHKD	REMARKS

DESIGNED BY: JVB
DRAWN BY: EJL
SHEET CHK'D BY: JVB
CROSS CHK'D BY: MP
APPROVED BY: DK
DATE: JUNE 2007

CDM
Camp Dresser & McKee
Raritan Plaza I, Raritan Center
Edison, New Jersey 08818
Tel: (732) 225-7000
consulting • engineering • construction • operations

U.S. ARMY CORPS OF ENGINEERS
KANSAS CITY DISTRICT

ROCKAWAY BOROUGH SUPERFUND SITE
EAST MAIN/WALL STREET PLUME REMEDIATION

FORCE MAIN/TRENCH DETAILS

PROJECT NO. 56540-6170
FILE NAME:
SHEET NO. 3

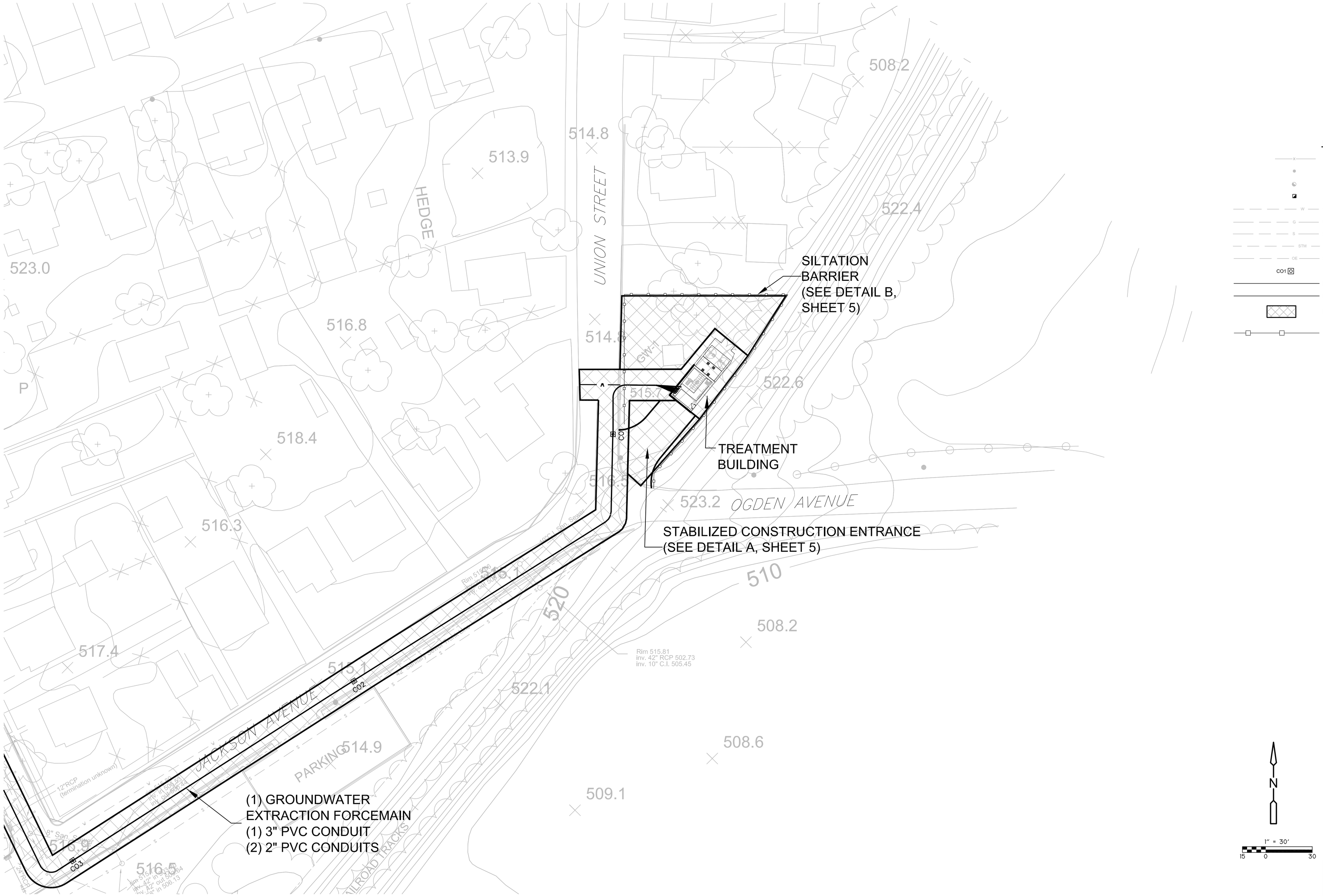

LEGEND

- FENCE LINE
- POWER POLE
- MONITORING WELL LOCATION
- EXTRACTION WELL LOCATION
- WATER LINE
- GAS LINE
- SANITARY SEWER LINE
- STORM SEWER
- OVERHEAD ELECTRICAL LINE
- CO1 CLEANOUT LOCATION
- NEW FORCEMAIN LINE
- NEW DISCHARGE LINE
- LIMITS OF DISTURBANCE
- SILTATION BARRIER

DEMETRIOS KLERIDES
PROFESSIONAL ENGINEER
NEW JERSEY LICENSE NO. GE 40679

REV. NO.	DATE	DRWN	CHKD	REMARKS

DESIGNED BY: JVB
DRAWN BY: EJL
SHEET CHK'D BY: JVB
CROSS CHK'D BY: MP
APPROVED BY: DK
DATE: JUNE 2007

CDM
Camp Dresser & McKee
Raritan Plaza I, Raritan Center
Edison, New Jersey 08818
Tel: (732) 225-7000
consulting • engineering • construction • operations

U.S. ARMY CORPS OF ENGINEERS
KANSAS CITY DISTRICT

ROCKAWAY BOROUGH SUPERFUND SITE
EAST MAIN/WALL STREET PLUME REMEDIATION

SOIL EROSION AND SEDIMENT CONTROL PLAN
ENLARGED PLAN

PROJECT NO. 56540-6170
FILE NAME:
SHEET NO. **4**

SOIL EROSION AND SEDIMENT CONTROL NOTES

1. TRACT AREA: 5.89 ACRES.
2. AREA OF DISTURBANCE: 1.15 ACRES.
3. ALL SOIL EROSION AND SEDIMENT CONTROL PRACTICES WILL BE INSTALLED IN ACCORDANCE WITH THE STANDARDS FOR SOIL EROSION AND SEDIMENT CONTROL IN NEW JERSEY, AND WILL BE IN PLACE PRIOR TO ANY MAJOR SOIL DISTURBANCE, OR IN THEIR PROPER SEQUENCE AND MAINTAINED UNTIL PERMANENT PROTECTION IS ESTABLISHED.
4. ANY DISTURBED AREA THAT WILL BE LEFT EXPOSED FOR MORE THAN THIRTY (30) DAYS AND NOT SUBJECT TO CONSTRUCTION TRAFFIC SHALL IMMEDIATELY RECEIVE A TEMPORARY SEEDING. IF THE SEASON PROHIBITS TEMPORARY SEEDING, THE DISTURBED AREAS WILL BE MULCHED WITH STRAW OR HAY AND TACKED IN ACCORDANCE WITH THE NEW JERSEY STANDARDS. SEE NOTE 21 BELOW.
5. PERMANENT VEGETATION IS TO BE ESTABLISHED ON EXPOSED AREAS WITHIN TEN (10) DAYS AFTER FINAL GRADING. MULCH IS TO BE USED FOR PROTECTION UNTIL VEGETATION IS ESTABLISHED. SEE NOTE 22 BELOW.
6. IMMEDIATELY FOLLOWING INITIAL DISTURBANCE OR ROUGH GRADING. ALL CRITICAL AREAS (STEEP SLOPES, SANDY SOILS, WET CONDITIONS) SUBJECT TO EROSION WILL RECEIVE A TEMPORARY SEEDING IN ACCORDANCE WITH NOTE 21 BELOW.
7. TEMPORARY DIVERSION BERMS ARE TO BE INSTALLED ON ALL CLEARED ROADWAYS AND EASEMENT AREAS. SEE THE DIVERSION DETAIL.
8. PERMANENT SEEDING AND STABILIZATION TO BE IN ACCORDANCE WITH THE "STANDARDS FOR PERMANENT VEGETATIVE COVER FOR SOIL STABILIZATION COVER". SPECIFIED RATES AND LOCATIONS SHALL BE ON THE APPROVED SOIL EROSION AND SEDIMENT CONTROL PLAN.
9. THE SITE SHALL AT ALL TIMES BE GRADED AND MAINTAINED SO THAT ALL STORMWATER RUNOFF IS DIVERTED TO SOIL EROSION AND SEDIMENT CONTROL FACILITIES.
10. ALL SEDIMENTATION STRUCTURES (SILT FENCE, INLET FILTERS, AND SEDIMENT BASINS) WILL BE INSPECTED AND MAINTAINED DAILY.
11. STOCKPILES SHALL NOT BE LOCATED WITHIN 50' OF A FLOODPLAIN, SLOPE, DRAINAGE FACILITY, OR ROADWAY. ALL STOCKPILES BASES SHALL HAVE A SILT FENCE PROPERLY ENTRENCHED AT THE TOE OF SLOPE.
12. A STABILIZED CONSTRUCTION ACCESS WILL BE INSTALLED, WHENEVER AN EARTHEN ROAD INTERSECTS WITH A PAVED ROAD. SEE THE STABILIZED CONSTRUCTION ACCESS DETAIL AND CHART FOR DIMENSIONS.
13. ALL NEW ROADWAYS WILL BE TREATED WITH SUITABLE SUBBASE UPON ESTABLISHMENT OF FINAL GRADE ELEVATIONS.
14. PAVED ROADWAYS MUST BE KEPT CLEAN AT ALL TIMES.
15. BEFORE DISCHARGE POINTS BECOME OPERATIONAL, ALL STORM DRAINAGE OUTLETS WILL BE STABILIZED AS REQUIRED.
16. ALL DEWATERING OPERATIONS MUST BE DISCHARGED DIRECTLY INTO A SEDIMENT FILTER AREA. THE FILTER SHOULD BE COMPOSED OF A FABRIC OR APPROVED MATERIAL. SEE THE DEWATERING DETAIL.
17. ALL SEDIMENT BASINS WILL BE CLEANED WHEN THE CAPACITY HAS BEEN REDUCED BY 50%. A CLEAN OUT ELEVATION WILL BE IDENTIFIED ON THE PLAN AND A MARKER INSTALLED ON THE SITE.
18. DURING AND AFTER CONSTRUCTION, THE APPLICANT WILL BE RESPONSIBLE FOR THE MAINTENANCE AND UPKEEP OF THE DRAINAGE STRUCTURES, VEGETATION COVER, AND ANY OTHER MEASURES DEEMED APPROPRIATE BY THE DISTRICT. SAID RESPONSIBILITY WILL END WHEN COMPLETED WORK IS APPROVED BY THE MORRIS COUNTY SOIL CONSERVATION DISTRICT.
19. ALL TREES OUTSIDE THE DISTURBANCE LIMIT INDICATED ON THE SUBJECT PLAN OR THOSE TREES WITHIN THE DISTURBANCE AREA WHICH ARE DESIGNATED TO REMAIN AFTER CONSTRUCTION ARE TO BE PROTECTED WITH TREE PROTECTION DEVICES. SEE THE TREE PROTECTION DETAIL.
20. THE MORRIS COUNTY SOIL CONSERVATION DISTRICT MAY REQUEST ADDITIONAL MEASURES TO MINIMIZE ON SITE OR OFF SITE EROSION PROBLEMS DURING CONSTRUCTION.
21. THE MORRIS COUNTY SOIL CONSERVATION DISTRICT MUST BE NOTIFIED, IN WRITING, AT LEAST 72 HOURS PRIOR TO ANY LAND DISTURBANCE, AND A PRE-CONSTRUCTION MEETING HELD.
22. CONTRACTOR TO SET UP A MEETING WITH THE INSPECTOR FOR PERIODIC INSPECTIONS OF THE TEMPORARY SEDIMENT BASIN PRIOR TO AND DURING ITS CONSTRUCTION.
23. TOPSOIL STOCKPILE PROTECTION
    - A) APPLY GROUND LIMESTONE AT A RATE OF 90 LBS PER 1000 SQ. FT.
    - B) APPLY FERTILIZER (10-20-10) AT A RATE OF 11 LBS. PER 1000 SQ. FT.
    - C) APPLY PERENNIAL RYEGRASS SEED AT 1 LB. PER 1000 SQ. FT. AND ANNUAL RYEGRASS AT 1 LB. PER 1000 SQ. FT.
    - D) MULCH STOCKPILE WITH STRAW OR HAY AT A RATE OF 90 LBS. PER 1000 SQ. FT.
    - E) APPLY A LIQUID MULCH BINDER OR TACK TO STRAW OR HAY MULCH.
    - F) PROPERLY ENTRENCH A SILT FENCE AT THE BOTTOM OF THE STOCKPILE.
24. TEMPORARY STABILIZATION SPECIFICATIONS
    - A) APPLY GROUND LIMESTONE AT A RATE OF 90 LBS PER 1000 SQ. FT.
    - B) APPLY FERTILIZER (10-20-10) AT A RATE OF 11 LBS. PER 1000 SQ. FT.
    - C) APPLY PERENNIAL RYEGRASS SEED AT 1 LB. PER 1000 SQ. FT. AND ANNUAL RYEGRASS AT 1 LB. PER 1000 SQ. FT.
    - D) MULCH STOCKPILE WITH STRAW OR HAY AT A RATE OF 90 LBS. PER 1000 SQ. FT.
    - E) APPLY A LIQUID MULCH BINDER OR TACK TO STRAW OR HAY MULCH.
25. PERMANENT STABILIZATION SPECIFICATIONS
    - A) APPLY TOPSOIL TO A DEPTH OF 5 INCHES (UNSETTLED).
    - B) APPLY GROUND LIMESTONE AT A RATE OF 90 LBS PER 1000 SQ. FT. AND WORK FOUR INCHES INTO SOIL.
    - C) APPLY FERTILIZER (10-20-10) AT A OF RATE 11 LBS. PER 1000 SQ. FT.
    - D) APPLY HARD FESCUE SEED AT 2.7 LBS. PER 1000 SQ. FT. AND CREEPING RED FESCUE SEED AT 0.7 LBS PER 1000 SQ. FT. AND PERENNIAL RYEGRASS SEED AT 0.25 LBS PER 1000 SQ. FT.
    - E) MULCH STOCKPILE WITH STRAW OR HAY AT A RATE OF 90 LBS. PER 1000 SQ. FT.
    - F) APPLY A LIQUID MULCH BINDER OR TACK TO STRAW OR HAY MULCH.
26. THE CONTRACTOR SHALL PREPARE A PLAN FOR THE PROPER DEWATERING OF EACH STREAM CROSSING PRIOR TO EXCAVATING THE STREAM BED. PLAN SHALL BE FORWARDED TO THE ENGINEER AND MORRIS COUNTY SOIL CONSERVATION DISTRICT FOR APPROVAL. THE DISTRICT SHALL BE NOTIFIED FOR INSPECTION PRIOR TO EACH STREAM CROSSING CONSTRUCTION.
27. ANY AREAS USED FOR THE CONTRACTOR'S STAGING, INCLUDING BUT NO LIMITED TO, TEMPORARY STORAGE OF STOCKPILED MATERIALS (e.g. CRUSHED STONE, QUARRY PROCESS STONE, SELECT FILL, EXCAVATED MATERIALS, ETC.), SHALL BE ENTIRELY PROTECTED BY A SILT FENCE ALONG THE LOW ELEVATION SIDE TO CONTROL SEDIMENT RUNOFF. PRIOR TO CONSTRUCTION, THE CONTRACTOR SHALL BE RESPONSIBLE FOR NOTIFYING THE MORRIS COUNTY SOIL CONSERVATION DISTRCIT OF ANY STAGING AND/OR STOCKPILE LOCATION AREAS AND FOR OBTAINING A SOIL EROSION AND SEDIMENT CONTROL CERTIFICATION FOR THESE AREAS.
28. A CRUSHED STONE, VEHICLE WHEEL-CLEANING BLANKET SHALL BE INSTALLED AT THE CONTRACTOR'S STAGING YARD AND/OR STOCKPILE AREAS TO PREVENT OFF-SITE TRACKING OF THE SEDIMENT BY CINSTRUCTION VEHICLES ONTO PUBLIC ROADS. BLANKET SHALL BE 15 ft. x 50 ft. x 6 IN. (MINIMUM), CRUSHED STONE 2-1/2 INCHES IN DIAMETER. SAID BLANKET SHALL BE UNDERLAIN WITH A SUITABLE SYNTHETIC SEDIMENT FILTER FABRIC AND MAINTAINED IN GOOD ORDER.

GENERAL SEQUENCE OF CONSTRUCTION

THE FOLLOWING IS A BASIC OUTLINE OF THE GENERAL SEQUENCE OF CONSTRUCTION FOR THE PROJECT:

1. ESTABLISH LIMITS OF WORK, INSTALL SILTATION CONTROL BARRIERS AND CONSTRUCT STABILIZED CONSTRUCTION ENTRANCE.
2. REMOVE, DEMOLISH, AND/OR RELOCATE EXISTING ON-SITE STRUCTURES, UTILITIES AND TREES.
3. STRIP AND STOCKPILE TOPSOIL AND STABILIZE AS REQUIRED.
4. PERFORM EARTHWORK INCLUDING ALL EXCAVATION, CUTTING, AND FILLING.
5. PERFORM TEMPORARY SOIL STABILIZATION AND MAINTENANCE ON ALL SOIL EROSION AND SEDIMENT CONTROL DEVICES.
6. CONSTRUCT FORCE MAIN AND APPURTENANCES TO INCLUDE FINAL GRADING, LOAMING, AND HYDROSEEDING.
7. REMOVE ALL CONSTRUCTION DEBRIS, TEMPORARY FACILITIES, AND SOIL EROSION AND SEDIMENT CONTROL DEVICES.

SPECIFICATIONS

A. SILT FENCE

1. POSTS SHALL BE CONSTRUCTED OF HARDWOOD WITH A MINIMUM DIAMETER THICKNESS OF 1½" INCHES.
2. A METAL FENCE WITH 6 INCH OR SMALLER OPENINGS AND AT LEAST 2 FEET HIGH MAY BE UTILIZED, FASTENED TO THE FENCE POSTS, TO PROVIDE REINFORCEMENT AND SUPPORT TO THE GEOTEXTILE FABRIC WHERE SPACE FOR OTHER PRACTICES IS LIMITED AND HEAVY SEDIMENT LOADING IS EXPECTED.
3. A GEOTEXTILE FABRIC, RECOMMENDED FOR SUCH USE BY THE MANUFACTURER, SHALL BE BURIED AT LEAST 6 INCHES DEEP IN THE GROUND. THE FABRIC SHALL EXTEND AT LEAST 2 FEET ABOVE THE GROUND. THE FABRIC MUST BE SECURELY FASTENED TO THE POSTS USING A SYSTEM CONSISTING OF METAL FASTENERS (NAILS OR STAPLES) AND A HIGH STRENGTH REINFORCEMENT MATERIAL (NYLON WEBBING, GROMMETS, WASHERS ETC.) PLACED BETWEEN THE FASTENING SYSTEM SHALL RESIST TEARING AWAY FROM THE POST. THE FABRIC SHALL INCOPORATE A DRAWSTRING IN THE TOP PORTION OF THE FENCE FOR ADDED STRENGTH.

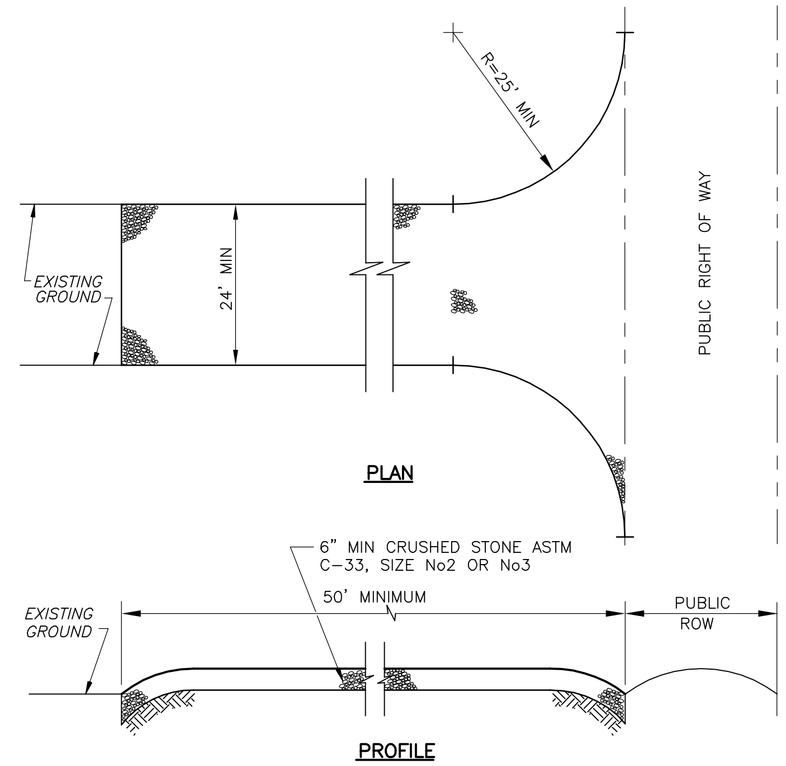

NOTES:
1. PROVIDE APPROPRIATE TRANSITION BETWEEN STABILIZED CONSTRUCTION ENTRANCE AND PUBLIC RIGHT-OF-WAY.
2. THE ENTRANCE SHALL BE MAINTAINED IN A CONDITION WHICH WILL PREVENT TRACKING OR FLOWING OF SEDIMENT ONTO PUBLIC RIGHT-OF-WAY THIS MAY REQUIRE PERIODIC TOP DRESSING WITH ADDITIONAL STONE OR ADDITIONAL LENGTH AS CONDITIONS DEMAND AND REPAIR AND/OR CLEANOUT OF ANY MEASURES USED TO TRAP SEDIMENT. ALL SEDIMENT SPILLED, DROPPED, WASHED, OR TRACKED ONTO PUBLIC RIGHT-OF-WAY MUST BE REMOVED IMMEDIATELY

STABILIZED CONSTRUCTION ACCESS

DETAIL A
NTS

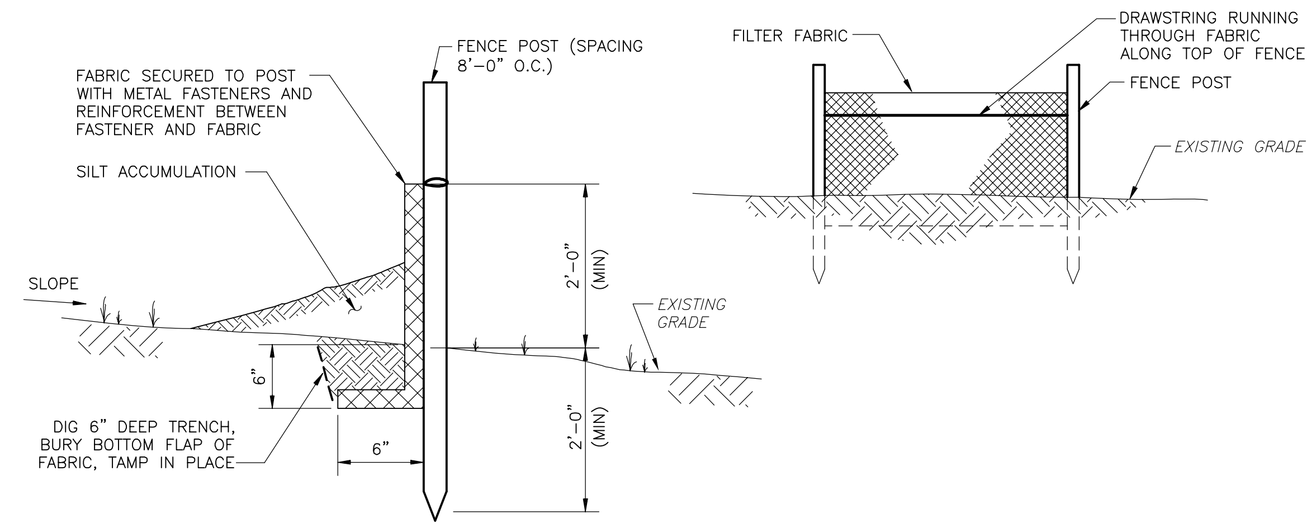

NOTE:
1. ALL SILT FENCE WILL BE INSPECTED AND REMEDIAL MAINTENANCE PERFORMED BY THE CONTRACTOR WITHIN 24 HOURS AFTER EACH RAIN.

SILTATION CONTROL BARRIER

DETAIL B
NTS

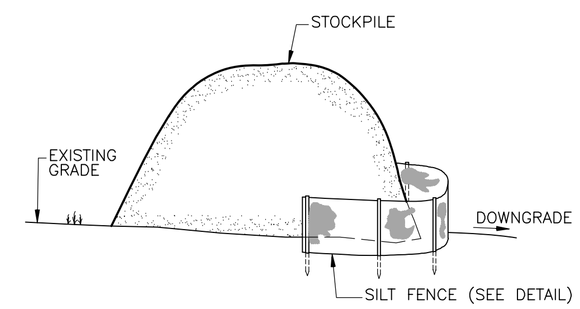

NOTE:
1. SEED IMMEDIATELY AFTER STOCKPILING.

TEMPORARY SOIL STOCKPILE

DETAIL D
NTS

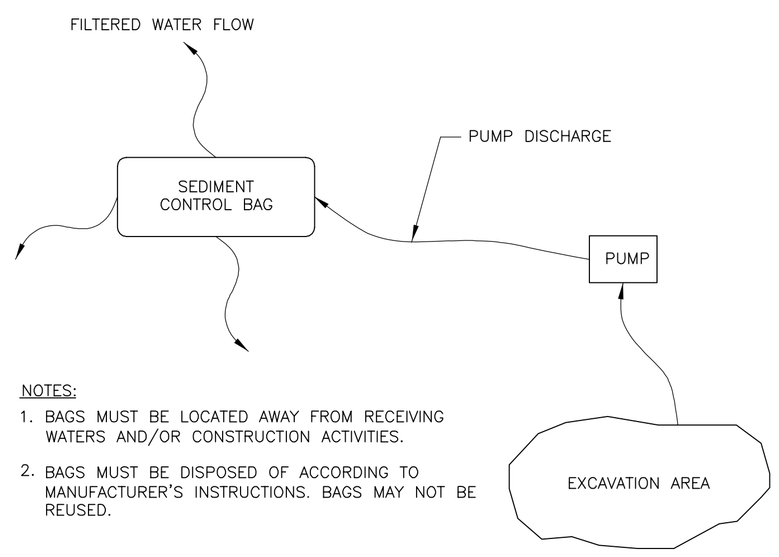

NOTES:
1. BAGS MUST BE LOCATED AWAY FROM RECEIVING WATERS AND/OR CONSTRUCTION ACTIVITIES.
2. BAGS MUST BE DISPOSED OF ACCORDING TO MANUFACTURER'S INSTRUCTIONS. BAGS MAY NOT BE REUSED.

SEDIMENT CONTROL BAG FOR DEWATERING

DETAIL C
NTS

NOTES:
1. PROVIDE BARRICADE AROUND EXISTING TREES TO REMAIN.
2. REMOVE AT PROJECT COMPLETION.
3. BARRIER TO BE EXTENDED TO DRIPLINE IN RURAL AREAS AND CURBLINE IN URBAN AREAS.

DEMETRIOS KLERIDES
PROFESSIONAL ENGINEER
NEW JERSEY LICENSE NO. GE 40679

REV. NO.	DATE	DRWN	CHKD	REMARKS

DESIGNED BY: JVB
DRAWN BY: EJL
SHEET CHK'D BY: JVB
CROSS CHK'D BY: MP
APPROVED BY: DK
DATE: JUNE 2007

CDM
Camp Dresser & McKee
Raritan Plaza I, Raritan Center
Edison, New Jersey 08818
Tel: (732) 225-7000
consulting • engineering • construction • operations

U.S. ARMY CORPS OF ENGINEERS
KANSAS CITY DISTRICT

ROCKAWAY BOROUGH SUPERFUND SITE
EAST MAIN/WALL STREET PLUME REMEDIATION

SOIL EROSION AND SEDIMENT CONTROL NOTES AND DETAILS I

PROJECT NO. 56540-6170
FILE NAME:
SHEET NO. 5

J:\56540\6170\CIVL\ C13 08/02/07 14:12 larsonej XREFS: CDM_2234

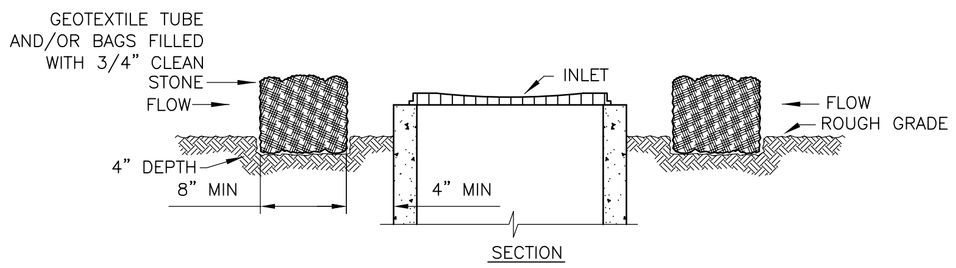

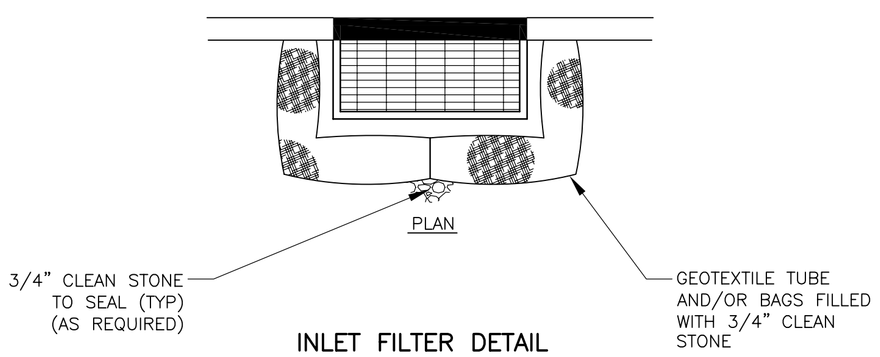

INLET FILTER DETAIL

DETAIL A
NTS

INSTALLATION NOTES

1. GEOTEXTILE TO BE WOVEN POLYPTOPYLENE PRODUCT 117F, BY SYNTHETIC INDUSTRIES INC., OR TERRATEX SC, BY WEBTECT INC., OR APPROVED EQUAL.

2. 3/4" CLEAN STONE CORE SHALL BE COMPLETELY CONTAINED WITHIN GEOTEXTILE. SEAMS SHALL BE SEWN OR CLOSED BY SUITABLE MECHANICAL MEANS TO PREVENT LEAKAGE OF STONE.

3. WHERE NO CURB IS PRESENT, BARRIER SHALL COMPLETELY ENCIRCLE THE DRAIN INLET.

4. INLET GRATE OPENING IS TO BE KEPT CLEAR OF OBSTRUCTIONS AT ALL TIMES.

5. THE PROTECTION DEVICE WILL BE DESIGNED TO CAPTURE OR FILTER RUNOFF FROM 1 YEAR, 24 HOUR STORM EVENT AND SHALL SAFELY CONVEY HIGHER FLOWS DIRECTLY INTO THE STORM SEWER SYSTEM. WHERE SLOPE REQUIRES, AN EARTHEN BERM SHALL BE INSTALLED TO DIRECT STORM FLOW INTO THE INLET, BUT NOT OVER THE CURB.

6. OTHER METHODS THAT ACCOMPLISH THE PURPOSE OF STORM SEWER INLET PROTECTION MAY BE USED IF APPROVED BY THE SOIL CONSERVATION DISTRICT.

7. INSPECTIONS SHALL BE FREQUENT. MAINTENANCE, REPAIR, AND REPLACEMENT SHALL BE MADE PROMPTLY, AS NEEDED. THE BARRIER SHALL BE REMOVED WHEN THE AREA DRAINING TOWARDS THE INLET HAS BEEN STABILIZED.

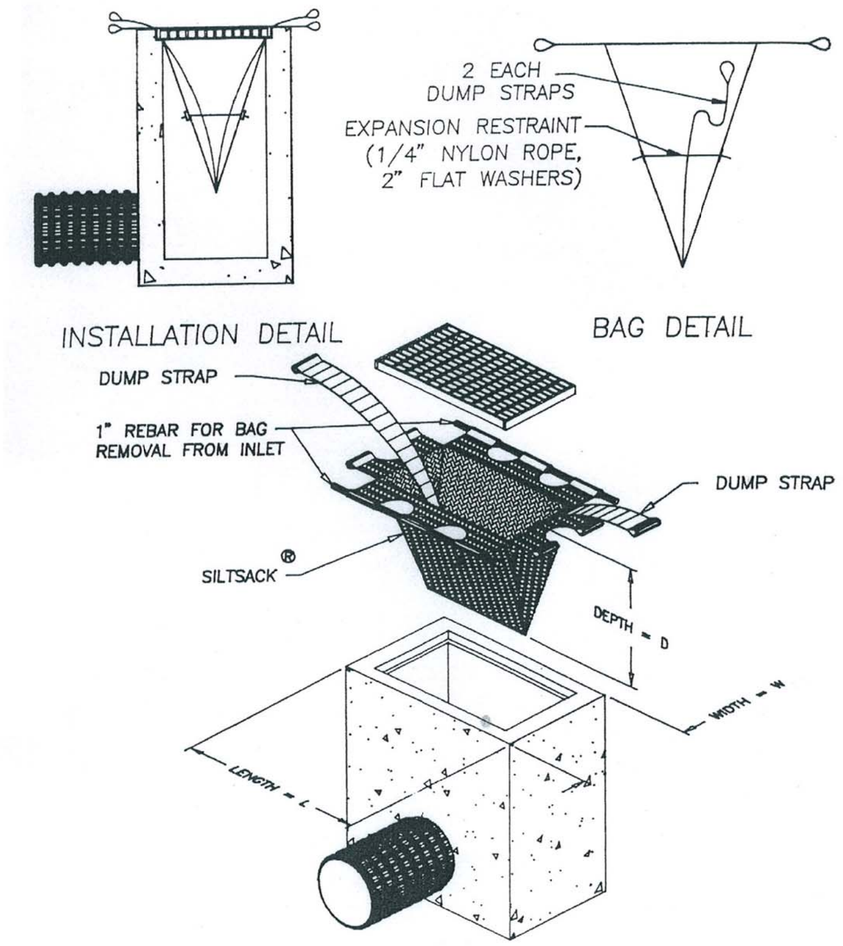

STREET INLET FILTER DETAIL

DETAIL B
NTS

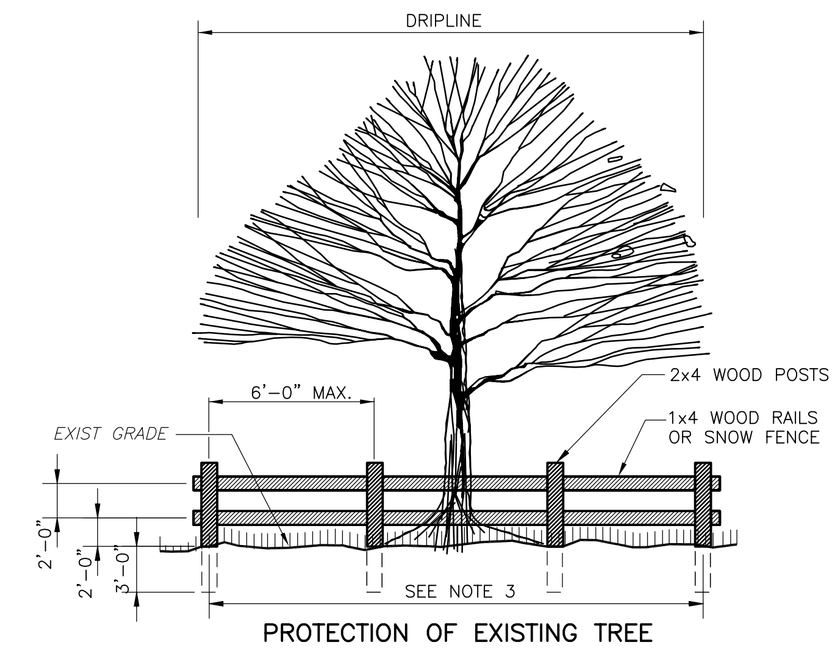

PROTECTION OF EXISTING TREE

DETAIL C
NTS

DEMETRIOS KLERIDES
PROFESSIONAL ENGINEER
NEW JERSEY LICENSE NO. GE 40679

REV. NO.	DATE	DRWN	CHKD	REMARKS

DESIGNED BY: JVB
DRAWN BY: EJL
SHEET CHK'D BY: JVB
CROSS CHK'D BY: MP
APPROVED BY: DK
DATE: JUNE 2007

CDM
Camp Dresser & McKee
Raritan Plaza I, Raritan Center
Edison, New Jersey 08818
Tel: (732) 225-7000
consulting • engineering • construction • operations

U.S. ARMY CORPS OF ENGINEERS
KANSAS CITY DISTRICT

ROCKAWAY BOROUGH SUPERFUND SITE
EAST MAIN/WALL STREET PLUME REMEDIATION

SOIL EROSION AND SEDIMENT CONTROL NOTES AND DETAILS II

PROJECT NO. 56540-6170
FILE NAME:
SHEET NO. 6

J:\56540\6170\CIVL\ FIG 6 06/06/07 17:24 larsonej XREFS: CDM_2234

Dust Control Notes

The following methods should be considered for controlling dust:

Mulches - See Standard for Stabilization with Mulches Only (pg. 5-1)

Vegetative Cover - See Standard for Temporary Vegetative Cover (pg. 7-1), Permanent Vegetative Cover for Soil Stabilization (pg. 4-1), and Permanent Stabilization with Sod (pg. 6-1)

Spray-On Adhesives - On mineral soils (not effective on muck soils). Keep traffic off these areas.

Table 16-1: Dust Control Materials

MATERIAL	WATER DILUTION	TYPE OF NOZZLE	APPLY GALLONS/ACRE
Anionic asphalt emulsion	7:1	Coarse Spray	1200
Latex emulsion	12.5:1	Fine Spray	235
Resin in water	4:1	Fine Spray	300
Polyacrylamide (PAM) - spray on Polyacrylamide (PAM) - dry spray	Apply according to manufacturer's instructions. May also be used as an additive to sediment basins to flocculate and precipitate suspended colloids. See Sediment Basin standard (pg. 26-1)		
Acidulated Soy Bean Soap Stick	None	Coarse Spray	1200

Tillage - To roughen surface and bring clods to the surface. This is a temporary emergency measure which should be used before soil blowing starts. Begin plowing on windward side of site. Chisel-type plows spaced about 12 inches apart, and spring-toothed harrows are examples of equipment which may produce the desired effect.

Sprinkling - Site is sprinkled until the surface is wet.

Barriers - Solid board fences, snow fences, burlap fences, crate walls, bales of hay, and similar material can be used to control air currents and soil blowing.

Calcium Chloride - Shall be in the form of loose, dry granulates of flakes fine enough to feed through commonly used spreaders at a rate that will keep surface moist but not cause pollution or plant damage. If used on steeper slopes, then use other practices to prevent washing into streams, or accumulation around plants.

Stone - Cover surface with crushed stone or coarse gravel.

MORRIS COUNTY SOIL CONSERVATION DISTRICT
APPLICATION FOR SOIL EROSION AND SEDIMENT CONTROL PLAN CERTIFICATION

Tab 6 – Specifications

Specification Section 2020; Dewatering

Specification Section 2200; Site Preparation

Specification Section 2316; Fill

Specification Section 2317; Excavation

Specification Section 2318; Trenching

Specification Section 2540; Erosion and Sedimentation Control

Specification Section 2721; Aggregate Base Course

Specification Section 2740; Flexible Pavement

Specification Section 2921; Seeding

SECTION 2020

DEWATERING

PART 1: GENERAL

1.01 GENERAL

The dewatering of all areas where work must be performed under this Contract is the responsibility of the CONTRACTOR and no additional sum will be allowed for any dewatering operation, overtime, equipment rental or any other expense incurred due to the occurrence of ground water, surface water or water from possible leakage of existing buildings, structures and piping in the vicinity of the CONTRACTOR'S operations.

Should water be encountered, the CONTRACTOR shall furnish and operate suitable pumping equipment of such capacity adequate to dewater the trench. The trench shall be sufficiently dewatered so that the laying and joining of the pipe is made in the dry. The CONTRACTOR shall convey all trench water to a natural drainage channel or storm sewer without causing any property damage and in strict accordance with state and/or local requirements. Trenches shall remain in a dewatered state until backfilling has been completed.

Disposal of silt and debris which accumulates during construction shall be performed in strict accordance with state and/or local requirements.

1.02 PERMITS

In accordance with NJAC 7:19-2.17(b)2, the CONTRACTOR shall be responsible for submitting Form BWA-005: Dewatering Permit-By-Rule (See Appendix B) to NJDEP for approval. Payment of applicable fees associated with dewatering activities will be the responsibility of the OWNER.

1.03 EQUIPMENT

The CONTRACTOR shall note that the project is to be constructed through residential areas. The CONTRACTOR will be expected to utilize silent generators with electric pumps or other quiet pumps to minimize noise during non-working hours. To the maximum extent possible, the CONTRACTOR shall minimize the use of dewatering pumps during non-working hours.

END OF SECTION

SECTION 02200

SITE PREPARATION

PART 1 GENERAL

1.1 SECTION INCLUDES

A. Removal and disposal of surface debris.

B. Removal and disposal of paving, curbs, and sidewalks.

C. Clearing and grubbing.

1.2 REFERENCES

A. Section 01400 - Quality Requirements: Requirements for references.

B. American Society for Testing and Materials (ASTM): D698 - Test Method for Laboratory Compaction Characteristics of Soil Using Standard Effort (12,400 ft-lbf/ft^3 (600 kN-m/m^3)).

1.3 DEFINITIONS

A. Clearing: Felling, trimming, and cutting of trees into sections and the satisfactory disposal of trees and other vegetation designated for removal, including down timber, snags, brush, and rubbish occurring in the areas to be cleared.

B. Grubbing: Removal and disposal of stumps, roots larger than 3 inches in diameter, and matted roots from the designated grubbing areas.

C. SMDD: Standard Maximum Dry Density and in the context of this Contract means the maximum dry unit weight determined in accordance with ASTM D698.

1.4 REGULATORY REQUIREMENTS

A. Conform to applicable State and local codes for disposal of debris.

B. Coordinate clearing work with utility companies and municipal authorities.

1.5 ENVIRONMENTAL REQUIREMENTS

A. Section 01500 - Temporary Facilities and Controls: Requirements for temporary controls.

B. Control the amount of dust resulting from operations to avoid creation of a nuisance in the surrounding area.

PART 2 PRODUCTS (NOT USED)

PART 3 EXECUTION

3.1 EXAMINATION

A. Section 01700 - Execution Requirements: Requirements for examination.

B. Verify that existing plant life or other surface features designated to remain are tagged or identified.

3.2 PREPARATION

A. Protect trees, plant growth, utilities, and surface features designated to remain from damage incident to clearing, grubbing, and construction operations by the erection of fencing or by such other means as circumstances require. For trees, erect fencing at the drip line.

3.3 CLEARING AND GRUBBING

A. Clear areas required for access to the Site and execution of the Works.

B. Cut off trees, stumps, roots, brush, and other vegetation in areas to be cleared, flush with or below the original ground surface, except such trees and vegetation as shown on the Drawings or directed by ENGINEER to be left standing.

C. Trim trees, designated to be left standing within the cleared areas, of dead branches 1 1/2 inches or more in diameter, and branches to the heights shown on the Drawings or directed by ENGINEER.

D. Neatly cut limbs and branches to be trimmed close to the bole of the tree or main branches.

E. Paint cuts more than 1 1/2 inch diameter with an approved tree-wound paint.

F. Remove and dispose of structures that obtrude, encroach upon, or otherwise obstruct work.

G. Protect trees and shrubs by minimizing grubbing along Maple Avenue, Halsey Avenue, Jackson Avenue, and associated work areas.

H. When directed by ENGINEER, remove trees and stumps that are designated as trees from areas outside those areas designated for clearing and grubbing; fell such trees, remove their stumps and roots, and dispose of the trees.

I. Clear undergrowth and deadwood, without disturbing subsoil.

J. Remove material to be grubbed, together with logs and other organic or non-organic debris not suitable for reuse, to a depth of not less than 18 inches below the original surface level of the ground in areas shown on the Drawings to be grubbed and in areas as directed by ENGINEER or

as shown on the Drawings as construction areas under this Contract, such as areas for buildings and areas to be paved.

K. Fill depressions made by grubbing with soil Type S1 (see Section 2316) and compact to minimum 95 percent SMDD to make the surface conform with the original adjacent surface of the ground.

L. Remove debris, rock, and extracted plant life.

M. Partially remove paving, curbs, and sidewalks as required within construction work areas shown on the Drawings. Neatly saw cut edges at right angles to surface.

N. Dispose of trees, logs, stumps, roots, brush, rotten wood, and other refuse from the clearing and grubbing and Site preparation operations. Provide certification of disposal for materials removed from the Site.

PART 4 MEASUREMENT AND PAYMENT

4.1 GENERAL

A. Section 01200 - Price and Payment Procedures: Requirements for measurement and payment.

B. Payment Basis: No separate payment will be made. This section forms part of the lump sum price associated with the mobilization portion of the project.

END OF SECTION

SECTION 02316

FILL

PART 1 GENERAL

1.1 SECTION INCLUDES

A. Building perimeter backfilling to subgrade elevations.

B. Fill for collection trench.

C. Site filling and backfilling.

D. Fill for over-excavation.

E. Compaction as scheduled.

1.2 REFERENCES

A. Section 01400 - Quality Requirements: Requirements for references.

B. American Society for Testing and Materials (ASTM):

1. C117 - Standard Test Method for Materials Finer than 75-μm (No. 200) Sieve in Mineral Aggregates by Washing.

2. C136 - Standard Test Method for Sieve Analysis of Fine and Coarse Aggregates.

3. D422 - Standard Test Method for Particle-Size Analysis of Soils.

4. D698 - Test Method for Laboratory Compaction Characteristics of Soil Using Standard Effort (12,400 ft-lbf/ft^3 (600 kN-m/m^3)).

5. D2216 - Standard Test Method for Laboratory Determination of Water (Moisture) Content of Soil and Rock.

6. D2487 - Standard Classification of Soils For Engineering Purposes (Unified Soil Classification System).

7. D2922 - Standard Test Methods for Density of Soil and Soil-Aggregate in Place by Nuclear Methods (Shallow Depth).

8. D3017 - Standard Test Method for Water Content of Soil and Rock in Place by Nuclear Methods (Shallow Depth).

C. State of New Jersey Department of Transportation Standard Specifications for Road and Bridge Construction.

D. United States Environmental Protection Agency (USEPA): SW-846 - Test Methods for Evaluating Solid Wastes, Physical/Chemical Methods, Third Edition and Promulgated Updates I-III, November 1986.

1.3 DEFINITIONS

A. SMDD: Standard Maximum Dry Density and in the context of this Contract means the maximum dry unit weight determined in accordance with ASTM D698.

B. 'State Standard' in this Section shall mean State of New Jersey Department of Transportation Standard Specifications for Road and Bridge Construction.

1.4 PROGRESS SUBMITTALS

A. Section 01300 - Administrative Requirements: Requirements for progress submittals.

B. Materials Sources: Submit name of proposed imported soil materials sources at least 14 days prior to commencing transport of materials to the Site.

C. Geotechnical and Chemical Data: At least 7 days prior to commencing transport of materials to the Site, submit geotechnical data for source testing as specified in Article 2.4 for each type of soil materials.

D. Independent Geotechnical and Analytical Testing Firm: At least 14 days prior to commencing transport of soil materials to the Site, submit the name and qualifications of the independent testing firms proposed by CONTRACTOR to provide testing services for work of this Section.

E. Suppliers' Certificates: Submit certificate indicating that each type of soil materials meets or exceeds specified requirements.

F. Weigh Tickets: Submit at the start of the work day following delivery weigh tickets generated at CONTRACTOR's weigh scale of soil delivered to the Site.

G. Weigh Scale Calibration: Submit no later than 7 days prior to commencing transport of materials to the Site a calibration chart, completed within the previous 6 months, for weigh scale. Weigh scale shall be calibrated by the State of New Jersey agency.

H. Field Quality Control: Submit field data on same day testing performed. Submit laboratory data within 24 hours of completion of test.

1.5 QUALITY ASSURANCE

A. Perform work of this Section in accordance with State Standards.

1.6 ENVIRONMENTAL REQUIREMENTS

A. Section 01500 - Temporary Facilities and Controls: Requirements for temporary controls.

B. Suspend operations whenever climatic conditions, as determined by ENGINEER, are unsatisfactory for placing fill to the requirements of this Section.

C. After occurrence of heavy rains, do not operate equipment on previously placed material or on approved surfaces until the material has dried sufficiently to prevent occurrence of excessive rutting.

D. Do not place fill in a frozen state or against frozen surfaces or frozen previously placed material. Do not place fill on snow, ice, water, or other objectionable material or on improperly prepared surfaces or previously placed material.

E. Where surfaces or previously placed material have been softened or eroded, remove soft and yielding material or otherwise objectionable or damaged areas and replace with compacted fill as specified by ENGINEER.

F. Under no circumstances shall pipe be installed in water. Pipe shall not be installed when, in the opinion of the Contacting Officer, the trench conditions or weather are unsuitable for such work. Contractor shall be fully responsible for dewatering and drainage of trenches during construction.

PART 2 PRODUCTS

2.1 GENERAL

A. Imported from an approved source.

B. Free of unsuitable materials including:

1. Frozen material or material containing snow or ice.

2. Trees, stumps, branches, roots, or other wood or lumber.

3. Wire, steel, cast iron, cans, drums, or other foreign material.

4. Materials containing hazardous or toxic constituents at hazardous or toxic concentrations.

5. Organic material, recycled material, broken concrete, masonry, rubble, asphalt pavement, rubbish, contaminated materials, stones larger than 2 inches or other unsuitable materials.

C. Compactable to specified density at specified moisture content.

2.2 COMMON FILL

A. Type S1: Approved native backfill, free of rocks larger than 4 inches.

B. Type S2: Approved imported backfill, free of rocks larger than 2 inches, organic matter, very soft clays, swelling clays, or fine uniform sands that may be difficult to compact.

1. Grain size distribution within the following limits:

Sieve Size	*Percent Passing by Weight*
2 inch	100
1 inch	85 to 100
3/4 inch	75 to 100
3/8 inch	65 to 95
No. 4	60 to 95
No. 10	50 to 90
No. 20	40 to 80
No. 40	30 to 70
No. 60	20 to 60
No. 140	10 to 40
No. 200	8 to 30

2.3 COARSE AGGREGATE

A. Type A1 Granular Bedding and Fill (Pea Gravel): Natural stone; washed free of clay, shale; graded in accordanee with ASTM C136 and ASTM C117 to the following limits:

1. Minimum Size: 1/4 inch.

2. Maximum Size: 5/8 inch.

B. Granular Backfill: Section 02721 Type A2.

2.4 SOURCE QUALITY CONTROL

A. Section 01400 - Quality Requirements: Requirements for source testing and analysis of soil material.

B. Testing and Analyses of Common Fill Type S1:

1. Maximum Dry Density and Optimum Moisture Content, ASTM D698: 1 sample per 5,000 cu yd, or portion thereof, of material required.

2. In-place Moisture Content, ASTM D2216: 1 sample per 5,000 cu yd, or portion thereof, of material required.

3. Grain Size, ASTM D422: 1 sample per 5,000 cu yd, or portion thereof, of material required.

4. Soil Classification, ASTM D2487: 1 sample per 5,000 cu yd, or portion thereof, of material required.

C. Testing and Analyses of Common Fill Type S2:

1. Maximum Dry Density and Optimum Moisture Content, ASTM D698: 1 sample per 5,000 cu yd, or portion thereof, of material required.

2. In-place Moisture Content, ASTM D2216: 1 sample per 5,000 cu yd, or portion thereof, of material required.

3. Grain Size, ASTM D422: 1 sample per 5,000 cu yd, or portion thereof, of material required.

4. Soil Classification, ASTM D2487: 1 sample per 5,000 cu yd, or portion thereof, of material required.

5. Chemical Analysis: 1 sample per 5,000 cu yd, or portion thereof, of material required. In accordance with Paragraph 2.4 E.

D. Testing and Analysis of Aggregate Type A1:

1. Maximum Dry Density and Optimum Moisture Content, ASTM D698: 1 sample per 2,000 cu yd, or portion thereof, of material required.

2. Grain Size, ASTM C117 and C136: 1 sample per 2,000 cu yd, or portion thereof, of material required.

E. Chemical characterization in the laboratory in accordance with the following methods:

Parameter	*Extraction/Preparation*(1)	*Analysis*(1)
TCL(2) Volatile Organic Compound	5035	8260B
TCL Semi-Volatile Organic Compound	3540C/3550B	8270C
Pesticide	3540C/3550B	8081A
PCB	3540C/3550B	8082
Herbicides	3540C/3550B	8151A
TAL(3) Metals	3050B or 3051	6010B/7000 Series
Cyanide	9013	9010 or 9012A

Notes:

(1) USEPA SW-846.
(2) TCL - Target Compound List.
(3) TAL - Target Analyte List.

F. All offsite soils brought on-site shall be tested by Contractor to ensure they are free from chemical contamination. Sample data shall be sufficient to demonstrate that topsoil and backfill materials do not contain contaminants in concentrations, which will exceed NJDEP commercial direct contact and impact to groundwater criteria (as per criteria listed in N.J.A.C. 7:26D, (Residential Direct Contact Soil Cleanup Criteria and Non-Residential Direct Contact Soil cleanup Criteria), change material or material source and retest. Testing of backfill shall demonstrate that the same is free of radiological contamination and/or above site is backgrounds in accordance with NJAC 7:28-12.

G. Provide materials of each type from the same source throughout the Works.

H. In the event of changes to approved sources of materials during the performance of the Works, immediately advise ENGINEER of revised locations and obtain approval of such locations and materials prior to use in the Works.

PART 3 EXECUTION

3.1 EXAMINATION

A. Section 01700 - Execution Requirements: Requirements for examination.

B. Verify subdrainage, dampproofing, or waterproofing installation has been inspected.

C. Verify structural ability of unsupported walls to support loads imposed by the fill.

D. Do not allow or cause any of the work performed or installed to be covered up or enclosed by work of this Section prior to required inspections, measurements, tests, or approvals.

E. Obtain approval from ENGINEER for completed excavations and previously placed material prior to placement of successive lifts.

F. Obtain approval from ENGINEER prior to placing fill against structures or around exposed buried utilities.

G. Ensure areas to be backfilled are free from debris, snow, ice, water, soft soils, organic materials, or frozen ground.

3.2 PREPARATION

A. Remove debris, snow, ice, water, soft soils, organic materials, or frozen ground from areas to be backfilled.

B. Scarify subgrade surface to a depth of 1 inch.

C. Compact subgrade to density requirements for subsequent backfill materials.

D. Cut out soft areas of subgrade not capable of compaction in place. Backfill with Type A2 fill and compact to density equal to or greater than requirements for subsequent fill material.

3.3 FILLING

A. Fill areas to grades and elevations shown on the Drawings.

B. Aggregate Type A1: Place and compact materials in equal continuous layers not exceeding 6 inches compacted depth.

C. Soil Type S1 and S2: Place and compact material in equal continuous layers not exceeding 6 inches compacted depth.

D. Employ a placement method that does not disturb or damage other work.

E. Maintain optimum moisture content of backfill materials to attain required compaction density.

F. Backfill around installations as follows:

1. Do not dump directly against installation.

2. Place layers simultaneously on both sides of installed work to equalize loading and minimize movement.

3. Where temporary unbalanced earth pressures are liable to develop on walls or other structures:

1. If approved by ENGINEER, erect bracing or shoring to counteract unbalance.

2. Place material by hand under, around, and over installations until 2 feet of cover is provided.

G. Slope grade away from building minimum 2 percent to match existing grade.

H. Make gradual grade changes. Blend slope into level areas.

I. Completely use suitable excavated soil (common fill Type S1) approved for backfilling before using imported common fill (common fill Type S2).

J. Do not use excavated material which is determined unsuitable by ENGINEER. Dispose of on the Site at a location determined by ENGINEER.

K. Do not operate heavy compaction equipment closer than 5 feet to foundations, underground utilities, or monitoring wells.

L. Remove sheeting and shoring required during excavation during backfilling operations. Do not remove bracing until backfilling has reached the respective level of such bracing. Pull sheeting in increments that will ensure compacted backfill is maintained at an appropriate elevation above toe of sheeting.

M. Decontaminate or dispose of sheeting and shoring used during the Works as directed by ENGINEER.

N. Do not backfill around or over cast-in-place concrete within 72 hours of concrete placing or until it has sufficient strength to withstand earth and compaction pressure, and obtain approval from ENGINEER to backfill.

O. Compact each layer to density specified in Article 3.4 before placing succeeding layers.

3.4 COMPACTION

A. Aggregate Type A1: Compact to 95 percent SMDD.

B. Soil Type S1: Compact to 95 percent SMDD.

C. Soil Type S2: Compact to 95 percent SMDD.

D. Apply uncontaminated water as necessary during compaction to obtain specified density. If material to be compacted is excessively moist, aerate with suitable equipment and methods until the moisture content is corrected. In areas not accessible to rolling equipment, compact material to specified density with mechanical tampers.

E. Do not direct jets of water at fill with such force that finer materials will be washed out.

F. Compaction Equipment: The type, size, and efficiency of compaction equipment shall be capable of achieving specified degree of compaction. When operating equipment adjacent to and immediately above structures, exercise care so as not to cause damage or displacement of the structure.

3.5 TOLERANCES

A. Top Surface of Backfilling: Plus or minus 1 inch from required elevations.

3.6 FIELD QUALITY CONTROL

A. Section 01400 - Quality Requirements: Requirements for field inspection and testing.

B. Testing by ENGINEER:

1. ENGINEER may select samples of uncompacted fill intended for the Works and samples of compacted fill in the Works.

2. ENGINEER will perform tests in the field and in the laboratory on samples of backfill and imported fill to determine if materials meet specification. Testing of imported fill will include analysis for the presence of contaminants, grain size analysis, moisture content determination, bulk wet density, maximum dry density, and hydraulic conductivity. Testing for backfill will include moisture content determination, maximum dry density, and bulk wet density. Copies of test reports will be supplied to CONTRACTOR on request.

3. Testing by ENGINEER will in no way relieve CONTRACTOR of his responsibility to test all material prior to notifying ENGINEER of materials' suitability for the work involved.

C. Methods of Testing by ENGINEER:

1. Maximum dry density and optimum moisture content will be determined in the laboratory in accordance with ASTM D698.

2. Moisture content in the laboratory will be determined in accordance with ASTM D2216.

3. Bulk wet density will be determined in the field in accordance with ASTM D2922.

4. Moisture content will be determined in the field in accordance with ASTM D3017.

5. Particle size analysis will be performed in accordance with ASTM D422 or ASTM C117 and ASTM C136, whichever is appropriate to material being tested.

6. Chemical characterization will be performed in the laboratory in accordance with the methods specified in Paragraph 2.4 E for Fill Type S2.

D. Frequency of Testing by ENGINEER:

1. At least 1 density test and 1 moisture content determination for each 10,000 cu yd placed will be made.

2. At least 1 particle size analysis will be made for each 10,000 cu yd of fill and for any change in materials being used in the backfill.

3. At least 1 sample for chemical characterization of fill will be obtained and analyzed for each 10,000 cu yd of Fill Type S2.

E. Failure to Meet Specified Requirements: If tests indicate that material specifications have not been achieved or cannot be obtained with equipment in use, procedure being followed, or material being incorporated, remove and replace work and modify operations so that the equipment, procedures, and materials will produce the required results. Additional testing required by ENGINEER will be to CONTRACTOR's account.

3.7 ADJUSTING

A. Section 01700 - Execution Requirements: Requirements for adjusting installed work.

B. Finish compacted surfaces to within 1 inch of grades shown on the Drawings but not uniformly high or low. Correct surface irregularities by loosening and adding or removing material until the surface is within specified grade.

C. Leave work areas in a properly graded condition sloped as required to permit proper drainage and free of depressions that will pond or collect water or debris that will restrict flow.

3.8 CLEANING

A. Section 01700 - Execution Requirements: Requirements for cleaning installed work.

B. Clean and reinstate work areas and areas affected by equipment outside areas specified to be excavated, to specified restoration condition.

C. Upon completion of backfilling, remove excess material and debris from work areas and travel routes.

3.9 PROTECTION OF FINISHED WORK

A. Section 01700 - Execution Requirements: Requirements for protecting installed work.

B. Reshape and recompact fills subjected to vehicular traffic.

PART 4 MEASUREMENT AND PAYMENT

4.1 GENERAL

A. Section 01200 - Price and Payment Procedures: Requirements for measurement and payment.

B. Payment Basis: No separate payment will be made. This section forms part of the lump sum price associated with the civil portion of the project.

END OF SECTION

SECTION 02317

EXCAVATION

PART 1 GENERAL

1.1 SECTION INCLUDES

A. Excavating for building foundations.

B. Excavating for manholes and well chambers.

1.2 DEFINITIONS

A. Excavation: Removal of materials of whatever nature encountered, whether wet, frozen, or otherwise, including dense tills, hardpan, frozen materials, cemented materials, concrete fragments, asphalt pavement, boulders or rock fragments, and weathered rock which can be removed by ripping or excavating with heavy-duty mechanical construction equipment without drilling and blasting.

B. Excavation Limits: Areal excavation limits shown on the Drawings to specified depth or as directed by ENGINEER and does not include areas shown as being on hold pending further sampling and analysis by ENGINEER.

C. Additional Excavation: Excavation beyond initial excavation limits either areally or in depth, as directed by ENGINEER following sampling and analysis and including trench excavations.

D. Rock: Material from solid masses of igneous, sedimentary, or metamorphic rock which, prior to its removal, was integral with its parent mass, and boulders or rock fragments having individual volume in excess of 1 cu yd.

1.3 PROGRESS SUBMITTALS

A. Section 01300 - Administrative Requirements: Requirements for progress submittals.

B. Provide to ENGINEER schedule of service disruptions to utilities no later than 3 weeks prior to proposed date of disruption. ENGINEER will review schedule with OWNER and respond within 1 week.

1.4 ENVIRONMENTAL REQUIREMENTS

A. Section 01500 - Temporary Facilities and Controls: Requirements for temporary controls.

B. Protect open excavations against damage due to surface runoff and runon. Take necessary precautions to prevent erosion of excavated or disturbed surfaces.

C. Suspend operations whenever climatic conditions, as determined by ENGINEER, may detrimentally affect the quality of excavated material and prevent their use as backfill.

D. After occurrence of heavy rains, do not operate equipment on approved excavations until the material has dried sufficiently to prevent occurrence of excessive rutting.

E. Where excavations have been softened or eroded, remove soft and yielding material or otherwise objectionable or damaged areas and replace with fill as specified by ENGINEER, at no additional cost to OWNER.

F. Decontaminate equipment involved in excavation activities which may have come in contact with potentially contaminated material before being removed from the Site or being relocated to clean areas of the Site.

G. Do not obstruct flow of surface drainage or natural watercourses.

1.5 SEQUENCING AND SCHEDULING

A. Section 01300 - Administrative Requirements: Requirements for coordination.

B. Sequence and schedule excavation activities with work of other Sections.

C. Coordinate interruptions of utility services to existing and adjacent buildings or facilities which become necessary either directly or indirectly due to work required under this Contract through ENGINEER.

D. Coordinate and sequence excavation operations to minimize the need for temporary stockpiling of excavated materials until required for backfilling. Make every effort to balance cut and fill operations and to ensure that excavated material designated for backfill is immediately placed as backfill in the Works. Keep the time during which excavations remain open to the practicable minimum.

E. Do not allow or cause any of work performed to be covered up or enclosed prior to required inspections, tests, or approvals.

F. Unless otherwise specified, advise ENGINEER a minimum of 48 hours in advance of excavation operations to enable ENGINEER to complete pre-excavation surveying.

PART 2 PRODUCTS (NOT USED)

PART 3 EXECUTION

3.1 EXAMINATION

A. Section 01700 - Execution Requirements: Requirements for examination.

B. Verify that survey bench marks and existing and intended elevations for the Works are as shown on the Drawings.

C. Monitoring Wells Requiring Protection: ENGINEER and CONTRACTOR will locate and mark locations prior to commencement of excavation.

3.2 PREPARATION

A. Identify required lines, levels, contours, and datum locations.

B. Locate, identify, and protect utilities from damage.

C. Arrange for utility company to identify utilities.

D. Protect plant life, lawns, and other features remaining as a portion of final landscaping.

E. Maintain and protect from damage bench marks and survey control points, wells, utilities, buildings, building foundations, surface features, and structures encountered, and not designated for demolition or removal. In the event of disturbance of or damage to any such well, utility, buildings, building foundations, surface features, or structures, immediately notify ENGINEER. Repair or replace, as directed by ENGINEER, any well, utility, building, building foundation, surface feature, or structure damaged by CONTRACTOR operations unless specified for demolition or removal.

F. Protect existing buildings, wells, facilities, surface features, and structures where temporary unbalanced earth pressures or uplift are liable to develop utilizing bracing, shoring, or other approved methods to counteract unbalance.

G. Employ procedures for excavation such that disturbance of wells, utilities, buildings, building foundations, surface features, and structures is avoided.

H. Protect excavations from contamination.

I. Obtain direction from ENGINEER before moving or otherwise disturbing wells, utilities, building, building foundations, surface features, and structures.

J. Remove surface features or obstructions including, but not necessarily limited to, trees, shrubs, bush, and other vegetation from surfaces to be excavated, within the limits shown on the Drawings or as required to construct the finished work. Dispose of such obstructions to an on-Site spoil area as directed by ENGINEER.

K. The contractor shall provide photo and video documentation of existing structures including roads, existing structures and landscaping within the work areas at pre-construction and post construction. No intrusive work shall commence prior to completion of pre-construction photo documentation activities.

3.3 EXCAVATING

A. Underpin or shore adjacent structures that may be damaged by excavating work.

B. Excavate soil to accommodate building foundations, and the Site structures, and construction operations.

C. Hand trim load-bearing surfaces for foundations. Excavate disturbed load-bearing soil in direct contact with foundations to expose soil of original bearing capacity.

D. Slope banks with machine to angle of repose or shallower, as required by Laws and Regulations, until shored.

E. Do not interfere with bearing splay of foundations which extends down at 30 degrees from horizontal starting at a point 2 feet horizontally from edge of footing.

F. Grade top perimeter of excavation to prevent surface water from draining into excavation.

G. Remove debris and other obstructions encountered.

H. Remove lumped soil, boulders, and rock up to 1 cu yd measured by volume.

I. Notify ENGINEER of unexpected subsurface conditions and discontinue affected work in area until notified to resume work.

J. Hand trim, make firm, and remove loose material and debris from excavations. Where natural or fill material at bottom of excavation, except excavation for foundations, is disturbed, compact disturbed soil to density at least equal to undisturbed soil or to the density specified for the succeeding layer of backfill, whichever is greater, or remove disturbed soil and refill the space as directed by ENGINEER.

K. Do not disturb soil within the branch spread of trees or shrubs that are to remain. If excavating through roots, excavate by hand and cut roots with sharp axe or saw. Seal cuts with approved tree wound dressing.

L. Open excavations shall be CONTRACTOR's sole responsibility.

M. Stockpile excavated material in area designated on the Site in accordance with Article 3.7.

3.4 DISPOSAL OF UNSUITABLE OR EXCESS EXCAVATED MATERIAL

A. Unsuitable Excavated Materials: Soil containing rocks larger than 6 inches measured through any axis, roots, organic matter, frozen material, snow, ice, very soft clays, fine uniform sands, soils which are not compactable to the specified density.

B. Dispose of excavated material determined by ENGINEER as unsuitable for backfill or excess excavated material, in a designated on-Site spoil area as directed by ENGINEER.

3.5 OVER-EXCAVATING

A. Notify ENGINEER when soil at the bottom of the excavation appears unsuitable and proceed as directed by ENGINEER. Where, in ENGINEER's opinion, the undisturbed condition of the soils is inadequate for the support of installations, over-excavate to adequate supporting soils as directed by ENGINEER and refill the excavated space with approved material to the proper elevation in accordance with the procedure specified for backfill. Where so directed by ENGINEER and except as otherwise specified, the excavation and removal of inadequate material as specified, supply and installation of such material in excess of quantities shown on the

Drawings will be paid for under the appropriate item of the Schedule of Additional Unit Prices. Use such over-excavated material in the Works or stockpile on the Site as approved by ENGINEER.

B. Backfill in accordance with Sections 02316, 02318, and 02632 as appropriate.

C. Should unauthorized excavation be carried below the lines and grades shown on the Drawings and in excess of specified limits and tolerance because of CONTRACTOR's operations including errors, methods of construction, or to suit his convenience, correct unauthorized excavation as follows:

1. Fill under structures including, but not necessarily limited to foundations, with concrete. Confirm by means of review of borehole logs, subsurface testing, or other method approved by ENGINEER that bearing capacity at lower elevation is adequate.

2. Fill under unauthorized over-excavation areas by extending the indicated bottom elevation of the base of the material specified to be placed to the unauthorized excavation bottom without altering the required top elevation and compact in accordance with Section 02316, 02318, and 02632 as appropriate unless otherwise directed by ENGINEER.

3. For locations where foundation bases are over-excavated, review borehole logs to confirm that soil at lower elevation is of acceptable bearing capacity, regardless of what over-excavated area is backfilled with.

D. Additional excavation to remove weakened or disturbed soil or any additional activity caused by CONTRACTOR's error, unsuitable construction methods or procedures, or to suit CONTRACTOR's convenience and subsequent additional backfill and compaction to correct deficiencies shall be at no additional cost to OWNER.

E. The excavation for the building was designed based on the evaluation geotechnical boring logs.

3.6 PROTECTING CLEAN SOIL FROM CONTAMINATION

A. Notify ENGINEER when soil at the bottom of the excavation appears contaminated and proceed as directed by ENGINEER.

3.7 TEMPORARY STOCKPILING

A. Obtain ENGINEER's approval for locations of temporary stockpiles. Obtain ENGINEER's approval prior to placing material in such stockpiles.

B. Construct stockpile sites so that they are well drained, free of foreign materials, and of adequate bearing capacity to support the weight of materials to be placed thereon.

C. Provide and maintain access to stockpiles.

D. Separate differing materials with substantial dividers or stockpile apart to prevent mixing.

E. Prevent contamination or segregation of soil types.

F. Direct surface water away from stockpile sites to prevent erosion or deterioration of materials.

G. Maintain temporary stockpile slopes not steeper than 2 horizontal to 1 vertical. In no instance shall stockpiles be greater than 15 feet in height above original surrounding grade. Place hay bales or other soil erosion and sediment control fencing at the base of and around each temporary stockpile to contain soil that may be washed off the stockpile.

H. Maintain area surrounding stockpiles in neat and tidy condition.

I. Cover stockpiled material with robust tarpaulin to withstand adverse weather, wind, and other detrimental forces. Provide total protection of stockpiled material from rain and other adverse weather effects.

3.8 TOLERANCES

A. Within 2 inches greater or less than specified depth but not uniformly greater or less.

3.9 FIELD QUALITY CONTROL

A. Section 01400 - Quality Requirements: Requirements for field inspection.

B. ENGINEER will provide for visual inspection of bearing surfaces of foundations.

3.10 CLEANING

A. Section 01700 - Execution Requirements: Requirements for cleaning installed work.

B. Clean and reinstate work areas and areas affected by equipment outside areas specified to be excavated, to specified restoration condition.

3.11 PROTECTION OF FINISHED WORK

A. Section 01700 - Execution Requirements: Requirements for protecting installed work.

B. Protect bottom of excavations and soil adjacent to and beneath foundation from freezing and disturbance.

PART 4 MEASUREMENT AND PAYMENT

4.1 GENERAL

A. Section 01200 - Price and Payment Procedures: Requirements for measurement and payment.

B. Payment Basis: No separate payment will be made. This section forms part of the lump sum price associated with the civil portion of the project.

END OF SECTION

SECTION 02318

TRENCHING

PART 1 GENERAL

1.1 SECTION INCLUDES

A. Excavating trenches for forcemains and discharge lines from building to well chambers and manholes.

B. Compacted fill from top of bedding to subgrade elevations.

C. Backfilling and compaction.

1.2 REFERENCES

A. Section 01400 - Quality Requirements: Requirements for references.

B. American Society for Testing and Materials (ASTM):

1. D422 - Standard Test Method for Particle-Size Analysis of Soils.

2. D698 - Test Method for Laboratory Compaction Characteristics of Soil Using Standard Effort (12,400 ft-lbf/ft^3 (600 kN-m/m^3)).

3. D2216 - Standard Test Method for Laboratory Determination of Water (Moisture) Content of Soil and Rock.

4. D2922 - Standard Test Methods for Density of Soil and Soil-Aggregate in Place by Nuclear Methods (Shallow Depth).

5. D2487 - Standard Classification of Soils for Engineering Purposes (Unified Soil Classification System).

6. D3017 - Standard Test Method for Water Content of Soil and Rock in Place by Nuclear Methods (Shallow Depth).

C. United States Environmental Protection Agency (USEPA): SW-846 - Test Methods for Evaluating Solid Wastes, Physical/Chemical Methods, Third Edition and Promulgated Updates I-III, November 1986.

1.3 DEFINITIONS

A. SMDD: Standard Maximum Dry Density and in the context of this Contract means the maximum dry unit weight determined in accordance with ASTM D698.

B. 'State Standard' in this Section shall mean State of New Jersey Department of Transportation Standard Specifications for Road and Bridge Construction.

1.4 QUALITY ASSURANCE

A. Perform work of this Section in accordance with State Standards.

1.5 ENVIRONMENTAL REQUIREMENTS

A. Section 01500 - Temporary Facilities and Controls: Requirements for temporary controls.

B. Protect open excavations against damage due to surface runoff and runon. Take necessary precautions to prevent erosion of excavated or disturbed surfaces.

C. Suspend operations whenever climatic conditions, as determined by ENGINEER, are unsatisfactory for placing fill to the requirements of this Section.

D. After occurrence of heavy rains, do not operate equipment on approved excavations until the material has dried sufficiently to prevent occurrence of excessive rutting.

E. Where excavations have been softened or eroded, remove soft and yielding material or otherwise objectionable or damaged areas and replace with fill as specified by ENGINEER.

F. Decontaminate equipment involved in excavation activities which may have come in contact with potentially contaminated material before being removed from the Site or being relocated to clean areas of the Site.

1.6 SEQUENCING AND SCHEDULING

A. Section 01300 - Administrative Requirements: Requirements for coordination.

B. Sequence and schedule excavation activities with work of other Sections.

C. Do not commence excavation operations until the Site-specific Health and Safety Plan has been reviewed by ENGINEER and implemented and decontamination facilities and stockpiling facilities are constructed and operational.

D. Coordinate interruptions of utility services to existing and adjacent buildings or facilities which become necessary either directly or indirectly due to work required under this Contract through ENGINEER. Down time for service disruptions may be limited as to duration and time (weekend, nights, or holidays). Perform work during the period designated.

E. Coordinate and sequence excavation operations to minimize the need for temporary stockpiling of excavated materials until required for backfilling. Make every effort to ensure that excavated material designated for backfill is immediately placed as backfill in the Works. Keep the time during which excavations remain open to the practicable minimum.

F. Do not allow or cause any of the work performed or installed to be covered up or enclosed prior to required inspections, tests, or approvals.

G. Unless otherwise specified, advise ENGINEER a minimum of 48 hours in advance of excavation operations to enable ENGINEER to take pre-excavation cross-sections.

PART 2 PRODUCTS

2.1 MATERIALS

A. Common Fill Type S1 and S2: Section 02316.

PART 3 EXECUTION

3.1 EXAMINATION

A. Section 01700 - Execution Requirements: Requirements for examination.

B. Verify that survey bench marks and intended elevations for the Works are as shown on the Drawings.

C. Verify structural ability of unsupported walls to support imposed loads by the fill.

D. Do not allow or cause any of the work performed or installed to be covered up or enclosed by work of this Section prior to required inspections, measurements, tests, or approvals.

E. Obtain approval from ENGINEER for completed excavations and previously placed material prior to placement of successive lifts.

F. Obtain approval from ENGINEER prior to placing fill against structures or around exposed buried utilities.

G. Do not proceed with backfilling operations within a specific excavation area until the excavation area is approved as complete by ENGINEER. Do not cause excavations to be backfilled until ENGINEER has approved excavation as complete and completed field measurements for payment purposes, and sampling and testing for analytical purposes.

H. Ensure areas to be backfilled are free from debris snow, ice, water, or frozen ground.

I. Extraction Wells: ENGINEER and CONTRACTOR will locate and mark the location of extraction wells prior to commencement of excavation.

3.2 PREPARATION

A. Identify required lines, levels, contours, and datum locations.

B. Locate, identify, and protect utilities that remain from damage.

C. Protect plant life, lawns, and other features remaining as a portion of final landscaping.

D. Protect bench marks, survey control points, existing structures, fences, sidewalks, paving, and curbs from excavating equipment and vehicular traffic.

E. Maintain and protect above and below grade utilities which are to remain.

F. Maintain and protect from damage wells, utilities, and structures encountered, and not designated for demolition or removal including buildings and building foundations. In the event of disturbance of or damage to any utility or structure, immediately notify ENGINEER. Repair or replace any well, utility, or structure damaged by CONTRACTOR operations unless specified for demolition or removal.

G. Protect existing buildings and surface features which may be affected while work is in progress.

H. Protect existing buildings and structures where temporary unbalanced earth pressures are liable to develop on walls or other structures utilizing bracing, shoring, or other approved methods to counteract unbalance.

I. Protect monitoring wells, extraction wells, and other structures and pipelines from uplift and displacement or disturbance during excavation operations.

J. Employ procedures for trenching such that disturbance of wells, utilities, structures, and their foundations is avoided.

K. Protect trenches from contamination and surface water runoff.

L. Obtain direction from ENGINEER before moving or otherwise disturbing utilities or structures.

M. Provide photo and video documentation of existing structures including roads, landscaping, and other structures within the work areas at pre-construction and post construction. No intrusive work shall commence prior to completion of pre-construction photo activities.

3.3 TRENCHING

A. Excavate soil required for connection of forcemains to treatment building and for treated water discharge piping.

B. Cut trenches sufficiently wide to enable installation and allow inspection. Remove water or materials that interfere with the Works.

C. Do not interfere with bearing splay of foundations which extends down at 45 degrees from horizontal starting at a point 2 feet horizontally from edge of footing.

D. The banks of trenches at bottom, within limits of pipe bedding and pipe cover, shall be as nearly vertical as practicable.

E. In no case during performance of the Works shall trenching advance more than 200 feet ahead of active installation. Do not leave trenches open more than 40 feet at end of day's operation.

F. Accurately excavate and grade the bottom of trenches to provide uniform bearing and support for each section of pipe on full thickness of approved bedding material at every point along its entire length.

G. Remove lumped soil, boulders, and rock up to 1 cu yd, measured by volume.

H. Hand trim, make firm, and remove loose material and debris from trenches. Where natural or fill material at bottom of excavation is disturbed, compact disturbed soil to density at least equal to undisturbed soil or to the density specified for the succeeding layer of backfill, whichever is greater, or remove disturbed soil and refill the space as directed by ENGINEER.

I. Do not disturb soil within the branch spread of trees or shrubs that are to remain. If excavating through roots, excavate by hand and cut roots with sharp axe or saw. Seal cuts with approved tree wound dressing.

J. Open trenches shall be CONTRACTOR's sole responsibility.

K. Dispose of excavated material not approved by ENGINEER for use as fill in the Works including boulders, debris, brush, roots, or other perishable matter, in a designated on-Site spoil area as directed by ENGINEER.

L. Fence any excavation left open overnight.

3.4 OVER-EXCAVATING

A. Notify ENGINEER when soil at bottom of the excavation appears unsuitable and proceed as directed by ENGINEER. Where, in ENGINEER's opinion, the undisturbed condition of the soils is inadequate for the support of installations, over-excavate to adequate supporting soils as directed by ENGINEER and refill the excavated space with approved material to the proper elevation in accordance with procedure specified for backfill. Where so directed by ENGINEER and except as otherwise specified, the excavation and removal of inadequate material as specified, supply and installation of such material in excess of quantities shown on Drawings will be paid for under the appropriate item of the **Schedule of Additional Unit Prices**. Use such over-excavated material in the Works or stockpile on the Site as approved by ENGINEER.

B. Should unauthorized excavation be carried below the lines and grades shown on the Drawings and in excess of the specified depth and tolerance because of CONTRACTOR's operations including errors, methods of construction, or to suit his convenience, correct unauthorized excavation as follows:

1. Fill under structures including, but not necessarily limited to foundations, with concrete. Confirm by means of review of borehole logs, subsurface testing, or other method approved by ENGINEER that bearing capacity at lower elevation is adequate.

2. Fill under unauthorized over-excavation areas by extending the indicated bottom elevation of the base of material specified to be placed to the unauthorized excavation bottom without altering the required top elevation, and compact unless otherwise directed by ENGINEER.

C. Additional excavation to remove weakened or disturbed soil caused by unsuitable construction methods or procedures or to suit CONTRACTOR's convenience and subsequent additional backfill and compaction to correct deficiencies shall be at no additional cost to OWNER.

3.5 PROTECTING CLEAN SOIL FROM CONTAMINATION

A. Notify ENGINEER when soil at the bottom of the excavation appears contaminated and proceed as directed by ENGINEER.

3.6 BACKFILLING

A. Backfill trenches to contours and elevations with unfrozen fill materials.

B. Do not backfill over porous, wet, frozen, or spongy subgrade surfaces.

C. Common Fill Type S1 and S2: Place and compact material in equal continuous layers as per the drawings.

D. Employ a placement method that does not disturb or damage forcemains or utilities in trench.

E. Maintain moisture content of fill materials to attain required compaction density.

F. Completely use Common Fill Type S1 approved for backfilling prior to using imported Fill Type S2.

G. Remove surplus fill materials from the Site.

H. Leave fill material stockpile areas completely free of excess fill materials.

I. Backfill material shall be stockpiled at sufficient distance from the sides of trenches to prevent overloading trench walls. Stability of trench excavations shall be the responsibility of the contractor.

3.7 COMPACTION

A. Common Soil Fill Type S1: Compact to 95 percent SMDD.

B. Common Soil Fill Type S2: Compact to 95 percent SMDD.

C. Apply uncontaminated water as necessary during compaction to obtain the specified density. If the material to be compacted is excessively moist, aerate with suitable equipment and methods until the moisture content is corrected. In areas not accessible to rolling equipment, compact material to specified density with mechanical tampers approved by ENGINEER.

D. When granular material is wetted by sprinkling, after being spread on material in place, sprinkling shall be done by method approved by ENGINEER. Do not direct jets of water at fill with such force that finer materials will be washed out.

E. Compaction Equipment: The type, size, and efficiency of compaction equipment shall be capable of achieving specified degree of compaction without damaging utilities. When operating equipment adjacent to and immediately above structures, exercise care so as not to cause damage or displacement of the structure.

3.8 TEMPORARY STOCKPILING

A. Obtain ENGINEER's approval for locations of temporary stockpiles. Obtain ENGINEER's approval prior to placing material in such stockpiles.

B. Stockpile materials on the Site at locations approved by ENGINEER.

C. Construct stockpile sites so that they are level, well drained, free of foreign materials, and of adequate bearing capacity to support the weight of materials to be placed thereon.

D. Provide and maintain access to stockpiles.

E. Separate differing materials with substantial dividers or stockpile apart to prevent mixing.

F. Prevent intermixing of soil types or contamination or segregation.

G. Direct surface water away from stockpile sites to prevent erosion or deterioration of materials.

H. Maintain temporary stockpile slopes not steeper than 2 horizontal to 1 vertical. In no instance shall stockpiles be greater than 15 feet in height above original surrounding grade. Place hay bales or other soil erosion and sediment control fencing at the base of and around each temporary stockpile to contain soil that may be washed off the stockpile.

I. Maintain area surrounding stockpiles in neat and tidy condition.

J. Cover stockpiled material with approved reinforced polyethylene sheeting of minimum 6-mil thickness to withstand adverse weather, wind, and other detrimental forces. Provide total protection of stockpiled material from rain and other adverse weather effects.

3.9 TOLERANCES

A. Trench Depth: Plus or minus 1 inch.

B. Trench Width: Plus or minus 1 foot from required width.

C. Top Surface of General Backfilling: Plus or minus 1 inch from required elevations.

3.10 FIELD QUALITY CONTROL

A. Section 01400 - Quality Requirements: Field inspection and testing.

B. Testing by ENGINEER:

1. ENGINEER may select samples of uncompacted fill intended for the Works and samples of compacted fill in the Works.

2. ENGINEER will perform tests in the field and in the laboratory on samples of backfill and imported fill to determine if materials meet specification at frequency and methods specified in Article 3.10. Copies of test reports will be supplied to CONTRACTOR on request.

3. Testing by ENGINEER will in no way relieve CONTRACTOR of his responsibility to test all material prior to notifying ENGINEER of materials' suitability for the work involved.

C. Methods of Testing by ENGINEER:

1. Maximum dry density will be determined in the laboratory in accordance with ASTM D698.

2. Moisture content in laboratory will be determined in accordance with ASTM D2216.

3. Bulk wet density will be determined in the field in accordance with ASTM D2922.

4. Moisture content will be determined in the field in accordance with ASTM D3017.

D. Frequency of Testing by ENGINEER:

1. At least 1 density test and 1 moisture content determination for each 100 linear feet of trench per lift.

E. Failure to Meet Specified Requirements: If tests indicate that material specifications have not been achieved or cannot be obtained with equipment in use, procedure being followed, or material being incorporated, remove and replace work and modify operations so that the equipment, procedures, and materials will produce the required results. Additional testing required by ENGINEER will be at no additional cost to OWNER.

F. Proofroll compacted fill surfaces under paving.

3.11 PROTECTION OF FINISHED WORK

A. Section 01700 - Execution Requirements: Requirements for protecting installed work.

B. Reshape and recompact fills subjected to vehicular traffic during construction.

PART 4 MEASUREMENT AND PAYMENT

4.1 GENERAL

A. Section 01200 - Price and Payment Procedures: Requirements for measurement and payment.

B. Payment Basis: No separate payment will be made. This section forms part of the lump sum price associated with the civil portion of the project.

END OF SECTION

SECTION 2540

SEDIMENTATION AND EROSION CONTROL

PART 1: GENERAL

1.01 WORK INCLUDED

CONTRACTOR shall furnish all labor, materials, equipment and incidentals necessary to perform all installation, maintenance, removal and area cleanup related to sedimentation control work as shown on the Drawings and as specified herein. The work shall include, but not necessarily be limited to; installation of temporary access ways and staging areas, silt fences, stone filter berms, sediment removal and disposal, device maintenance, removal of temporary devices, temporary mulching, excelsior matting installation and final cleanup.

1.02 RELATED WORK

1. Dewatering is included in Section 2020

2. Trenching, Backfilling and Compacting is included in Section 2210

1.03 SUBMITTALS

Within 10 days after award of Contract, the CONTRACTOR shall submit to the ENGINEER for approval, in accordance with Section 1300, technical product literature for all commercial products to be used for sedimentation and erosion control.

1.04 QUALITY ASSURANCE

The CONTRACTOR shall be responsible for the timely installation and maintenance of all sedimentation control devices necessary to prevent the movement of sediment from the construction site to off site areas or into the stream system via surface runoff or underground drainage systems. Measures in addition to those shown on the Drawings necessary to prevent the movement of sediment off site shall be installed, maintained, removed, and cleaned up at the expense of the CONTRACTOR. No additional charges to the OWNER will be considered.

Sedimentation and erosion control measures shall conform to the requirements outlined in the New Jersey Standards for Soil Erosion and Sediment Control, latest edition.

PART 2: PRODUCTS

2.01 MATERIALS

Crushed stone for sediment filtration devices shall be 2 inches in diameter. Stone for riprap shall conform to New Jersey Soil Conservation Committee Standards. The median size

of the riprap by weight shall be as shown on the Drawings.

Silt Fence

1. Steel posts shall be a minimum of 5 feet in length, 2-1/2-inch by 2-1/2-inch by 1/4-inch angle post with self-fastening tabs and a 5-inch by 4-inch (nominal) steel anchor plate at bottom.

2. Welded wire fabric shall be 4-inch by 4-inch mesh of 12 gauge by 12 gauge steel wire.

3. Silt fence fabric shall be a woven, polypropylene, ultraviolet resistant material such as Mirafi 100X as manufactured by Mirafi, Inc., Charlotte, NC or equal.

4. Tie wires for securing silt fence fabric to wire mesh shall be light gauge metal clips (hog rings), or 1/32-inch diameter soft aluminum wire.

5. Prefabricated commercial silt fence may be substituted for built-in-field fence. Pre-fabricated silt fence shall be "Envirofence" as manufactured by Mirafi Inc., Charlotte, NC or equal.

Straw mulch shall be utilized on all newly graded areas to protect areas against washouts and erosion. Straw mulch shall be comprised of threshed straw of oats, wheat, barley, or rye that is free from noxious weeds, mold or other objectionable material. The straw mulch shall contain at least 50 percent by weight of material to be 10 inches or longer. Straw shall be in an air-dry condition and suitable for placement with blower equipment.

Latex acrylic copolymer, such as Soil Sealant with coalescing agent as manufactured by Soil Stabilization Co., Merced, CA or approved equivalent shall be used as straw mulch tackifier.

An asphalt tackifier shall only be used when temperatures are too low to allow the use of a latex acrylic copolymer and only with prior written approval from the ENGINEER.

Excelsior matting blanket shall be installed in all seeded drainage swales and ditches as shown on the Drawings or as directed by the ENGINEER. Excelsior matting shall be AMXCO Curlex Blanket as manufactured by American Excelsior Company, Arlington, TX or equal.

PART 3: EXECUTION

3.01 INSTALLATION

Silt Fence Installation

1. Silt fences shall be positioned as indicated on the Drawings and as necessary to prevent off site movement of sediment produced by construction activities as directed by the ENGINEER.

2. Dig trench approximately 6-in wide and 6-in deep along proposed fence lines.

3. Drive metal-stakes, 8 feet on center (maximum) at back edge of trenches. Stakes shall be driven 2 feet (minimum) into ground.

4. Hang 4 by 4 woven wire mesh on posts, setting bottom of wire in bottom of trench. Secure wire to posts with self-fastening tabs.

5. Hang silt fence fabric on wire carrying to bottom of trench with about 6-in of fabric laid across bottom of trench. Stretch fabric fairly taut along fence length and secure with tie wires 12-in O.C. both ways.

6. Backfill trench with excavated material and tamp.

7. Install pre-fabricated silt fence according to manufacturer's instructions.

Stone Filter Berm Installation

1. Place berm stone at pump discharge underlain with filter fabric.

3.02 MAINTENANCE AND INSPECTIONS

Inspections

1. CONTRACTOR shall make a visual inspection of all sedimentation control devices once per week and promptly after every rainstorm. If such inspection reveals that additional measures are needed to prevent movement of sediment to offsite areas or into the vent trench, CONTRACTOR shall promptly install additional devices as needed. Sediment controls in need of maintenance shall be repaired promptly.

Device Maintenance

1. Silt Fences

   a. Remove accumulated sediment once it builds up to one-half of the height of the fabric.

   b. Replace damaged fabric, or patch with a 2-foot minimum overlap. Overlaps may only be made at fence posts.

   c. Make other repairs as necessary to ensure that the fence is filtering all runoff directed to the fence.

2. Stone Filter Berm

   a. Muck out trapped silt from dewatering operations when it has built up to within 6 inches of the top of the berm.

b. Replace crushed stone filter when saturated with silt.

3. Add crushed stone to access ways and staging area as necessary to maintain a firm surface free of ruts and mudholes.

3.03 TEMPORARY MULCHING

CONTRACTOR shall apply temporary mulch to areas where rough grading has been completed but final grading is not anticipated to begin within 30 days of the completion of rough grading. Straw mulch shall be applied at rate of 70 to 90 lbs/1000 ft^2 and tackified with latex acrylic copolymer at a rate of 1 gal/1000 ft^2 diluted in a ratio of 30 parts water to 1 part latex acrylic copolymer mix.

3.04 EXCELSIOR MATTING

Excelsior matting blankets shall be installed in all seeded drainage swales and ditches as shown on the Drawings and as directed by the ENGINEER in accordance with manufacturer's instructions. The area to be covered shall be properly prepared, fertilized and seeded with permanent vegetation before the blanket is applied. When the blanket is unrolled, the netting shall be on top and the fibers in contact with the soil over the entire area. The blankets shall be applied in the direction of water flow, and stapled. Blankets shall be placed a minimum of three rows (of 4-ft) wide (total approx. 12-ft width) within the drainage swale/ditch and stapled together in accordance with manufacturer's instructions. Side overlaps shall be 4-in minimum. The staples shall be made of wire, .091-in in diameter or greater, "U" shaped with legs 10-in in length and a 1-1/2-in crown. The staples shall be driven vertically into the ground, spaced approximately two linear feet apart, on each side, and one row in the center alternately spaced between each side. Upper and lower ends of the matting shall be buried to a depth of 4-in in a trench. Erosion stops shall be created every 25 feet by making a fold in the fabric and carrying the fold into a silt trench across the full width of the blanket. The bottom of the fold shall be 4-in below the ground surface. Staple on both sides of fold. Where the matting must be cut or more than one roll length is required in the swale, turn down upper end of downstream roll into a slit trench to a depth of 4-in. Overlap lower end of upstream roll 4-in past edge of downstream roll and staple.

To ensure full contact with soil surface, roll matting with a roller weighing 100 pounds per foot of width perpendicular to flow direction after seeding, placing matting and stapling. Thoroughly inspect channel after completion. Correct any areas where matting does not present a smooth surface in full contact with the soil below.

3.05 DISPOSAL OF DRAINAGE

The CONTRACTOR shall take sufficient precautions during construction to minimize the run-off of polluting substances such as silt, clay, fuels, oils, bitumens and calcium chloride into the supplies and surface waters of the State. Special precautions shall be taken in the use of construction equipment to prevent operations which promote erosion.

Disposal of drainage shall be in an area approved by the ENGINEER. The CONTRACTOR shall prevent the flow or seepage of drainage back into the drainage area. Drainage shall not be disposed of until silt and other sedimentary materials have been removed. Particular care shall be taken to prevent the discharge of unsuitable drainage to a water supply or surface water body.

As a minimum, the following shall apply:

1. Staked bales of hay or approved silt fencing shall be provided at points where drainage from the work site leaves the site to reduce the sediment content of the water. Sufficient bales of hay shall be provided such that all flow will filter through the hay. Other methods which reduce the sediment content to an equal or greater degree may be used as approved by the ENGINEER.

2. Drainage leaving the site shall flow to watercourses in such a manner to prevent erosion.

3.06 REMOVAL AND FINAL CLEANUP

Once the site has been fully stabilized against erosion, remove sediment control devices and all accumulated silt. Dispose of silt and waste materials in proper manner. Regrade all areas disturbed during this process and stabilize against erosion with surfacing materials as indicated on the Drawings.

END OF SECTION

SECTION 02721

AGGREGATE BASE COURSE

PART 1 GENERAL

1.1 SECTION INCLUDES

A. Aggregate base course for road restoration.

1.2 REFERENCES

A. Section 01400 - Quality Requirements: Requirements for references.

B. American Society for Testing and Materials (ASTM):

1. C117 - Standard Test Method for Materials Finer than 75-μm (No. 200) Sieve in Mineral Aggregates by Washing.

2. C136 - Standard Test Method for Sieve Analysis of Fine and Coarse Aggregates.

3. D698 - Standard Test Method for Laboratory Compaction Characteristics of Soil Using Standard Effort (12,400 ft-lbf/ft^3 (600 kN-m/m^3)).

4. D2922 - Standard Test Methods for Density of Soil and Soil-Aggregate in Place by Nuclear Methods (Shallow Depth).

5. D3017 - Standard Test Method for Water Content of Soil and Rock in Place by Nuclear Methods (Shallow Depth).

C. State of New Jersey Department of Transportation Standard Specifications for Road and Bridge Construction.

D. United States Environmental Protection Agency (USEPA): SW-846 - Test Methods for Evaluating Solid Wastes, Physical/Chemical Methods, Third Edition and Promulgated Updates I-III, November 1986.

1.3 DEFINITIONS

A. SMDD: Standard Maximum Dry Density and in the context of this Contract means the maximum dry unit weight determined in accordance with ASTM D698.

B. 'State Standard' in this Section shall mean State of New Jersey Department of Transportation Standard Specification for Road and Bridge Construction.

1.4 PROGRESS SUBMITTALS

A. Section 01300 - Administrative Requirements: Requirements for progress submittals.

B. Materials Sources: Submit name of proposed imported soil materials sources at least 14 days prior to commencing transport of materials to the Site.

C. Geotechnical and Chemical Data: At least 7 days prior to commencing transport of materials to the Site, submit data for source testing as specified in Article 2.3 for each type of aggregate materials.

D. Independent Geotechnical and Analytical Testing Firm: At least 14 days prior to commencing transport of aggregate materials to the Site, submit the name and qualifications of the independent testing firm proposed by CONTRACTOR to provide testing services for work of this Section.

E. Suppliers' Certificates: Submit certificates indicating that each type of aggregate material meets or exceeds specified requirements.

F. Weigh Tickets: Submit weigh tickets generated at CONTRACTOR's weigh scale of aggregate delivered to the Site the previous day.

G. Weigh Scale Calibration: Submit no later than 7 days prior to transporting materials to the Site a calibration chart, completed within the previous 6 months, for weigh scale. Weigh scale shall be calibrated by State of New Jersey Standards.

1.5 QUALITY ASSURANCE

A. Perform work of this Section in accordance with State Standards.

1.6 QUALIFICATIONS

A. Section 01800 – Facility Operation: Requirements for qualifications.

B. Independent Geotechnical Testing Firm: Company specializing in performing the work of this Section and complying with ASTM D3740.

C. Independent Laboratory: Company specializing in performing the work of this Section and complying with ASTM E548.

1.7 DELIVERY, STORAGE, AND HANDLING

A. Section 01600 - Product Requirements: Requirements for transporting, handling, storing, and protecting products.

B. Deliver, handle, and transport fill materials at all times in a manner and with equipment that will prevent intermixing of aggregate types, segregation, or contamination.

C. Minimize stockpiling requirements. Transport material from source directly to final position where possible.

D. Stockpile fill materials on the Site in locations approved by ENGINEER.

PART 2 PRODUCTS

2.1 GENERAL

A. Imported from an approved source and composed of clean, graded, hard, durable, uncoated particles obtained from deposits of gravel or sand, talus rock, quarried rock, or other suitable granular materials.

B. Free of unsuitable materials including:

1. Frozen material or material containing snow or ice.

2. Trees, stumps, branches, or other wood or lumber.

3. Wire, steel, cast iron, cans, drums, or other foreign material.

4. Materials containing hazardous or toxic constituents at hazardous or toxic concentrations.

2.2 COARSE AGGREGATE

A. Type A2: State Standard Dense Graded Aggregate Gradation Size Number 57..

2.3 SOURCE QUALITY CONTROL

A. Section 01400 - Quality Requirements: Requirements for source testing and analysis of aggregate material.

B. Testing and Analysis of Coarse Aggregate Type A2:

1. Maximum Dry Density, ASTM D698: 1 sample per 2,000 cu yd, or portion thereof, material required.

2. Grain Size, ASTM C117 and C136: 1 sample per 2,000 cu yd, or portion thereof, material required.

C. If tests indicate materials do not meet specified requirements, change material or material source and retest.

D. Provide materials of each type from the same source throughout the Works.

E. In the event of changes to approved sources of materials during performance of the Works, immediately advise ENGINEER of revised locations and obtain approval of such locations and materials prior to use in the Works.

PART 3 EXECUTION

3.1 EXAMINATION

A. Section 01700 – Execution Requirements: Requirements for examination.

B. Verify substrate has been inspected, gradients and elevations are correct, and is dry.

3.2 PREPARATION

A. Correct irregularities in substrate gradient and elevation by scarifying, reshaping, and recompacting.

B. Do not place fill on soft, muddy, or frozen surfaces.

3.3 AGGREGATE PLACEMENT

A. Place fill Type A2 in maximum 6-inch layers and compact to 95 percent SMDD.

B. Level and contour surfaces to elevations and gradients shown on the Drawings.

C. Add water to assist compaction. If excess water is apparent, remove aggregate and aerate to reduce moisture content.

D. Use mechanical tamping equipment in areas inaccessible to compaction equipment.

3.4 TOLERANCES

A. Flatness: Maximum variation of 1/4 inch measured with 10-foot straight edge.

B. Scheduled Compacted Thickness: Within 1/4 inch.

C. Variation from Design Elevation: Within 1/2 inch.

3.5 FIELD QUALITY CONTROL

A. Section 01400 - Quality Requirements: Requirements for field inspection and testing.

B. Testing by ENGINEER:

1. ENGINEER may select samples of uncompacted fill intended for the Works and samples of compacted fill in the Works.

2. ENGINEER will perform tests in the field and in the laboratory on samples of aggregate to determine if materials meet specification at frequency and methods specified in Article 3.5. Copies of test reports will be supplied to CONTRACTOR on request.

3. Testing by ENGINEER will in no way relieve CONTRACTOR of his responsibility to test all material prior to notifying ENGINEER of materials' suitability for the work involved.

C. Methods of Testing:

1. Maximum dry density will be determined in the laboratory in accordance with ASTM D698.

2. Moisture content in laboratory will be determined in accordance with ASTM D2216.

3. Bulk wet density will be determined in the field in accordance with ASTM D2922

4. Moisture content will be determined in the field in accordance with ASTM D3017.

5. Particle size analysis will be performed in accordance with ASTM C117/136.

D. Frequency of Testing by ENGINEER:

1. At least 1 density test and 1 moisture content determination for each 2,000 cu yd of material required.

2. At least 1 particle size analysis will be made for each 2,000 cu yd of material required.

E. Failure to Meet Specified Requirements: If tests indicate that material specifications have not been achieved or cannot be obtained with equipment in use, procedure being followed, or material being incorporated, remove and replace work and modify operations so that the equipment, procedures, and materials will produce the required results. Additional testing required by ENGINEER will be at no additional cost to OWNER.

F. Proofroll compacted fill surfaces under paving.

3.6 SCHEDULES

A. Under Asphalt Pavement: Compact placed aggregate materials to achieve compaction of 95 percent SMDD.

B. Under Concrete Pavement: Compact placed aggregate materials to achieve compaction of 95 percent SMDD.

PART 4 MEASUREMENT AND PAYMENT

4.1 GENERAL

A. Section 01200 - Price and Payment Procedures: Requirements for measurement and payment.

B. Payment Basis: No separate payment will be made. This section forms part of the lump sum price associated with the civil portion of the project.

END OF SECTION

SECTION 02740

FLEXIBLE PAVEMENT

PART 1 GENERAL

1.1 SECTION INCLUDES

A. Asphaltic wearing and base course.

B. Tack coat.

1.2 REFERENCES

A. Section 01400 - Quality Requirements: Requirements for references.

B. State of New Jersey Department of Transportation Standard Specifications for Road and Bridge Construction.

1.3 DEFINITIONS

A. 'State Standard' in this Section shall mean State of New Jersey Department of Transportation Standard Specifications for Roads and Bridge Construction.

1.4 ENVIRONMENTAL REQUIREMENTS

A. Section 01500 - Temporary Facilities and Controls: Requirements for temporary controls.

B. Comply with weather and ground surface conditions in State Standard.

PART 2 PRODUCTS

2.1 MATERIALS

A. Primer: State of New Jersey Standard, Grades MC-30 or MC-70.

B. Tack Coat: State of New Jersey Standard, Grades RC-70, RC-T, RS-1, SS-1, SS-1h, CSS-1, or CSS-1h.

2.2 ASPHALT PAVING MIX

A. Base Course: State of New Jersey Standard, Type I-2.

B. Wearing Course: State of New Jersey Standard, Type I-4.

PART 3 EXECUTION

3.1 EXAMINATION

A. Section 01700 - Execution Requirements: Requirements for examination.

B. Verify that compacted granular base is dry and ready to support paving and imposed loads.

C. Verify slopes and elevations of granular base are correct.

3.2 PRIMER

A. Apply primer in accordance with State Standards.

B. Apply primer to contact surfaces of curbs, gutters.

C. Use clean sand to blot excess primer.

3.3 TACK COAT

A. Apply tack coat in accordance with State Standards.

B. Apply tack coat to contact surfaces of curbs and gutters.

C. Coat surfaces of manhole and catch basin frames with oil to prevent bond with asphalt pavement. Do not tack coat these surfaces.

3.4 PLACING ASPHALT PAVEMENT

A. Install Works in accordance with State Standards.

B. Place base course to 3 inch compacted thickness.

C. Place wearing course to 2 inch compacted thickness.

3.5 COMPACTION

A. Compact to State Standards.

3.6 TOLERANCES

A. Flatness: Maximum variation of 1/4 inch measured with 10-foot straight edge.

B. Scheduled Compacted Thickness: Within 1/4 inch.

C. Variation from True Elevation: Within 1/2 inch.

3.7 PROTECTION OF FINISHED WORK

A. Section 01700 - Execution Requirements: Requirements for protecting installed work.

B. Immediately after placement, protect pavement from mechanical injury for 2 days or until surface temperature is less than 140 degrees F.

PART 4 MEASUREMENT AND PAYMENT

4.1 GENERAL

A. Section 01200 - Price and Payment Procedures: Requirements for measurement and payment.

B. Payment Basis: No separate payment will be made. This section forms part of the lump sum price associated with the civil portion of the project.

END OF SECTION

SECTION 02921

SEEDING

PART 1 GENERAL

1.1 SECTION INCLUDES

A. Preparation of subgrade.

B. Placing topsoil.

C. Seeding.

D. Mulching and fertilizing.

E. Maintenance.

1.2 REFERENCES

A. Section 01400 - Quality Requirements: Requirements for references.

B. American Society for Testing and Materials (ASTM):

1. D2974 - Standard Test Method for Moisture, Ash and Organic Matter of Peat and Other Organic Soils.

2. D4972 - Standard Test Method for pH of Soils.

C. United States Environmental Protection Agency (USEPA): SW-846 - Test Method for Evaluating Solid Waste, Physical/Chemical Methods, Third Edition.

D. State of New Jersey Department of Transportation Standard Specifications for Road and Bridge Construction.

1.3 DEFINITIONS

A. Weeds: Include, but are not limited to, Dandelion, Jimsonweed, Quackgrass, Horsetail, Morning Glory, Rush Grass, Mustard, Lambsquarter, Chickweed, Cress, Crabgrass, Canadian Thistle, Nutgrass, Poison Oak, Blackberry, Tansy Ragwort, Bermuda Grass, Johnson Grass, Poison Ivy, Nut Sedge, Nimble Will, Bindweed, Bent Grass, Wild Garlic, Perennial Sorrel, and Brome Grass.

B. Noxious Weeds:

1. Harmful, undesirable, hard to control.

2. Include but are not limited to: Johnson Grass or Johnson Grass Crosses, Canadian Thistle, Quackgrass, Wild Garlic and Wild Onion, Bermuda Grass, Annual Blue Grass, Corn Cockle, Dodder, and Blindweed.

C. 'State Standard' in this Section shall mean State of New Jersey Department of Transportation Standard Specifications for Road and Bridge Construction.

1.4 PROGRESS SUBMITTALS

A. Section 01300 - Administrative Requirements: Requirements for progress submittals.

B. Seeding and Erosion Control Plan: At least 14 days prior to placing topsoil, submit to ENGINEER for approval CONTRACTOR's Seeding and Erosion Control Plan including, but not limited to, the following:

1. Seed mixture(s) and fertilizers for the Site and restoration areas and application rates.

2. Time of year for planting such mixtures.

3. Methods of preparing seedbed, seeding, sodding, and rolling seeded and sodded areas.

4. Methods to provide erosion control until seed is placed and grass is established (i.e., use of any or a combination of emulsifiers, tackifiers, mulches, adhesives, nurse crop seed, and erosion control matting or blankets).

C. Seed Certificates: At least 14 days prior to seeding submit certificates from seed vendors for each seed mixture required, stating botanical and common name, percentage by weight and percentages of purity, germination, and weed seed for each species.

D. Fertilizer Certificate: At least 14 days prior to placing fertilizer, submit certificate confirming conformance with recommendations provided by laboratory based on topsoil analysis.

E. Test Results: Submit test results of imported topsoil. Indicate, by test results, information necessary to determine suitability, including, but not limited to, organic content, pH, phosphorus, potassium, calcium, and magnesium; and laboratory or supplier recommendation for fertilizer application rate for specified seed mixture.

1.5 CLOSEOUT SUBMITTALS

A. Section 01700 - Execution Requirements: Requirements for closeout submittals.

B. Maintenance Data: Include maintenance instructions, cutting method, and maximum grass height; types, application frequency, and recommended coverage of fertilizer.

1.6 QUALITY ASSURANCE

A. Perform work of this Section in accordance with State Standards.

B. Provide seed mixture in containers showing percentage of seed mix, year of production, net weight, date of packaging, and location of packaging.

1.7 QUALIFICATIONS

A. Section 01800 – Facility Operation: Requirements for qualifications.

B. Seed Producer: Established vendor capable of providing adequate seed quality and quantities.

C. Fertilizer: Established vendor capable of providing adequate fertilizer quality and quantities.

D. Installer: Company specializing in planting and establishment of multiple acre grading and planting projects with 5 years documented experience.

1.8 REGULATORY REQUIREMENTS

A. Comply with regulatory agencies for fertilizer composition.

1.9 DELIVERY, STORAGE, AND HANDLING

A. Section 01600 - Product Requirements: Requirements for transporting, handling, storing, and protecting products.

B. Deliver grass seed mixture in original sealed containers bearing seed Supplier's label and certificate indicating the content of species, grade, and mass. Seed in damaged packaging will be rejected. Label containers showing:

1. Analysis of seed mixture.
2. Percentage of pure seed.
3. Percentage of weeds.
4. Year of production.
5. Net weight.
6. Date when tagged and location.
7. Percentage germination.
8. Name and address of distributor.

C. Deliver fertilizer in waterproof bags showing weight, chemical analysis, and name of manufacturer.

D. Deliver mulch and erosion control agent in moisture-proof containers showing manufacturer, content, and net weight (air dry).

E. Deliver erosion control blankets in a rolled mat form protected with an outer waterproof wrap bearing manufacturer's label indicating product name.

F. Store materials in accordance with manufacturer's instructions and in a manner to prevent damage or deterioration.

G. Remove from Site seed which has become wet, moldy, or otherwise damaged in transit or storage.

H. Store seed in weatherproof enclosures.

1.10 ENVIRONMENTAL REQUIREMENTS

A. Section 01500 - Temporary Facilities and Controls: Requirements for temporary controls.

B. Do not apply materials over snow, ice, frozen ground, or standing water.

C. Do not apply seed slurry when wind conditions are such that material would be carried beyond designated area or that materials would not be uniformly applied.

1.11 SEQUENCING AND SCHEDULING

A. Section 01300 - Administrative Requirements: Requirements for coordination.

B. Schedule topsoil placing to permit seeding operations under optimum conditions during normal planting seasons.

C. Coordinate planting with specified maintenance periods to provide maintenance until acceptance by ENGINEER.

D. Seed areas within 10 days of completion of topsoiling.

PART 2 PRODUCTS

2.1 SEED MIXTURE

A. Mixture of the following New Jersey Department of Transportation Mix Type A-4:

1. Spread Fescue: 30 percent by dry weight.

2. Chewing or Hard Fescue: 30 percent by dry weight.

3. Kentucky Bluegrass: 30 percent by dry weight.

4. Perennial Rye: 10 percent by dry weight.

B. Grass Seed: Fresh, clean, new-crop seed harvested previous year complying with the tolerance for purity and germination established by Official Seed Analysis of North America; minimum germination of 75 percent and minimum purity of 97 percent; obtained from an approved seed house.

C. Weed Seed Content: Not over 0.25 percent and free of noxious weeds.

2.2 TOPSOIL

A. Fertile, agricultural soil, typical for locality, capable of sustaining vigorous plant growth, taken from drained Site; free of subsoil, stumps, brush, stones, lumps, clay or impurities, plants, weeds, roots, and other extraneous matter with any dimension greater than two inches; pH value minimum of 5.4 and maximum of 7, organic content minimum of 5 percent and maximum of 20 percent.

B. Topsoil shall be free of contaminated material and construction debris.

2.3 MULCHING MATERIAL

A. Straw Mulch: Oat or wheat, free from weeds, foreign matter detrimental to plant life, and dry; seasoned for spreading with mulch blower equipment.

2.4 FERTILIZER

A. Granular form, dry, free flowing, and free from lumps.

B. Recommended for grass, with 50 percent of the elements derived from organic sources; of proportion necessary to eliminate any deficiencies of topsoil as indicated in Paragraph1.4 E.

2.5 WATER

A. Clean, fresh, and free of any contaminants and substances or matter which could inhibit germination and vigorous growth of grass.

2.6 ACCESSORIES

A. Lime (if required based on topsoil analysis): Ground agricultural limestone, minimum 85 percent of total carbonates graded as follows:

Percent Passing By Weight	*Sieve Size*
90	No. 18
50	No. 120

2.7 SOURCE QUALITY CONTROL

A. Section 01400 - Quality Requirements: Requirements for source testing and analysis of mix formulation for hydroseeding.

B. Analyze topsoil for organic content, pH, potassium, phosphorus, calcium, and magnesium at a rate of 1 test for each 2 acres of topsoil placement.

C. Test in accordance with the following methodology:

Parameter	*Test Method*
Organic Content	ASTM D2974
pH	ASTM D4972

PART 3 EXECUTION

3.1 EXAMINATION

A. Section 01700 - Execution Requirements: Requirements for examination.

B. Verify that prepared soil base is ready to receive work of this Section.

3.2 PREPARATION - SUBGRADE

A. Prepare subgrade to eliminate uneven areas and low spots. Maintain lines, levels, profiles, and contours. Make changes in grade gradual. Blend slopes into level areas.

B. Remove foreign materials, weeds, and undesirable plants and their roots. Remove contaminated soil.

C. Scarify subgrade to a depth of 3 inches where topsoil shall be placed. Repeat cultivation in areas where equipment, used for hauling and spreading topsoil, has compacted subsoil.

D. Remove surface debris, roots, vegetation, lumps, and stones in excess of 1 inch.

E. Obtain ENGINEER's approval of topsoil grade and depth before starting seeding.

3.3 PLACING TOPSOIL

A. Spread topsoil to a minimum settled depth of 4 inches over area to be seeded. Rake until smooth.

B. Place topsoil during dry weather and on dry, unfrozen subgrade.

C. Remove vegetable matter and foreign non-organic material from topsoil while spreading.

D. Grade topsoil to eliminate rough, low, or soft areas, and to ensure positive drainage.

3.4 SEEDING

A. Apply seed at a rate of 150 pounds per acre evenly in 2 intersecting directions. Rake in lightly.

B. Apply seed by broadcasting. Rake in lightly.

C. Do not seed areas in excess of that which can be mulched on same day.

D. Do not sow immediately following rain or when ground is too dry.

E. Apply seed when winds do not exceed 5 miles per hour using equipment suitable for area involved.

F. Measure quantities of material by weight or weight-calibrated volume measurement.

3.5 FERTILIZING

A. Apply fertilizer prior to seeding in accordance with laboratory recommendations based on soil analysis by CONTRACTOR and approved by ENGINEER.

B. Apply after smooth raking of topsoil.

C. Do not apply fertilizer at same time or with same machine used to apply seed.

D. Mix thoroughly into upper 2 inches of topsoil.

E. Lightly water to aid the dissipation of fertilizer.

3.6 MULCHING

A. Immediately following seeding, apply mulch to a thickness of 1/8 inches. Maintain clear of shrubs and trees.

B. Apply water with a fine spray immediately after each area has been mulched. Saturate to 4 inches of soil.

3.7 MAINTENANCE

A. Start maintenance immediately after area seeded.

B. Maintain seeded area for not less than the period stated below and longer, as required to establish an acceptable stand, as determined by ENGINEER:

1. Not less than 60 days after last area seeded.

2. If planted in fall and not given full 60 days of maintenance, or if not considered acceptable by ENGINEER as specified in Paragraph 3.9 E, at completion of 60 days continue maintenance the following spring until acceptable vegetative cover is established.

C. Maintain vegetative cover by watering, fertilizing, weeding, mowing, trimming, overseeding, and other operations such as rolling, regrading, and replanting as required to establish a smooth, acceptable grassed surface, free of eroded or bare areas.

D. Cutting Height: Mow vegetative cover as soon as there is enough top growth to cut with mower set at the specified height for the principal species planted. Repeat mowing as required to maintain specified height. Do not remove more than 1/3 of grass height. Do not mow when grass is wet. Time initial and subsequent mowings as required to maintain the following grass height:

1. Mow grass at 4 to 5-inch height. Do not mow lower than 4 inches.

E. Vegetative cover will be accepted by ENGINEER provided all requirements have been complied with, including completion of 60-day maintenance period, and the following.

1. Vegetative cover is properly established.

2. Turf is free of eroded, bare, or dead spots and 98 percent free of weeds.

3. No surface is visible when vegetative cover has been cut to a height of 4 to 5 inches.

3.8 CLEANING

A. Section 01700 - Execution Requirements: Requirements for cleaning installed work.

B. Clean up immediately, soil, mulch, broken sod, or other debris spilled onto pavement and dispose of deleterious materials.

C. Take precautions and prevent contamination by seeding and mulching slurry of structures, signs, guardrails, fences, utilities, or other surfaces not specified to be landscaped.

D. Where contamination occurs, remove seeding slurry to satisfaction of, and by means approved by ENGINEER.

3.9 PROTECTION OF FINISHED WORK

A. Section 01700 - Execution Requirements: Requirements for protecting installed work.

B. Protect landscaped areas from damage.

PART 4 MEASUREMENT AND PAYMENT

4.1 GENERAL

A. Section 01200 - Price and Payment Procedures: Requirements for measurement and payment.

B. Payment Basis: No separate payment will be made. This section forms part of the lump sum price associated with the civil portion of the project.

END OF SECTION

MORRIS COUNTY SOIL CONSERVATION DISTRICT
APPLICATION FOR SOIL EROSION AND SEDIMENT CONTROL PLAN CERTIFICATION

Tab 7 – Request for Authorization (RFA) Form: Stormwater Discharge Associated with Construction Activity

FOR DISTRICT USE ONLY
SCD Name: _____
SCD RFA # _____
FEE Paid: _____
Check # _____
Voucher # _____
Date RFA Rec'd: _____
RFA Cert. Date: _____
Ch. 251 App. # _____

N.J. Department of Environmental Protection
Bureau of Nonpoint Pollution Control
in cooperation with the
N.J. Department of Agriculture
State Soil Conservation Committee
and Soil Conservation Districts

Request for Authorization (RFA) Form

NJPDES General Permit No. NJG0088323
Stormwater Discharge Associated with Construction and Mining Activity

Please follow all instructions carefully. Omissions may delay your permit authorization request. **SIGN AND DATE** where indicated on page 3. **PRINT OR TYPE** all information. Submit the completed RFA to the appropriate Soil Conservation District office listed on page 4. Attach additional sheets as necessary.

1. Location of Project or Facility

A. Project or Facility Name Rockaway Borough Superfund Site: East Main/Wall Street Plume Remediation

B. Street Address w/number (No PO Box #'s) Union Street at Ogden Avenue

C. Municipality Rockaway Borough D. County Morris

E. Block Number 14, 45 F. Lot Number 18, 13

G. ZIP Code 07866 H. Contact Person Brian Quinn

I. Telephone Number (212) 637-4381 J. Fax Number (212) 637-4429

2. Owner(s) of Project or Facility

A. Name United States Environmental Protection Agency

B. Permanent Legal Address 290 Broadway

C. City or Town New York D. State NY E. ZIP Code 10007

F. Contact Person Brian Quinn

G. Telephone Number (212) 637-4381 H. Fax Number (212) 637-4429

I. Parent Company N/A Telephone Number ( )

Mailing Address _____ Fax Number ( )

City or Town _____ State _____ ZIP Code _____

RFA_CONST_2_26_04

Request for Authorization (RFA) Form
NJPDES General Permit No. NJG0088323
Stormwater Discharge Associated with Construction and Mining Activity

3. Operating Entity *

A. Name Cape Environmental, Inc.

B. Permanent Legal Address 6851 Oak Hall Lane

C. City or Town Columbia D. State MD E. ZIP Code 21045

F. Contact Person David Bettendorf

G. Telephone Number (443) 276-1994 H. Fax Number (443) 276-2078

I. Parent Company N/A Telephone Number ( )

Mailing Address _____ Fax Number ( )

City or Town _____ State _____ ZIP Code _____

*Note - The Operating Entity has operational control over site specifications or over those daily activities necessary to ensure compliance with permit conditions.

4. Description of Current and Proposed Land Use

A. Proposed Use (check the applicable category(ies))

(1) Residential Dwelling: ____ Single Family ____ Multi Family

(2) ____ Commercial Facility (3) ____ Industrial Facility (4) ____ Mining or Quarry

(5) ____ Public School, Religious or Charitable Institution

(6) Other (Specify) Groundwater treatment facility and associated piping and extraction wells

B. Area of Disturbance (acres) 1.15

C. Describe the current land use and general nature of disturbance activity
Currently Borough property and public right-of-way. Trenching will be performed to install piping, and a treatment building will be built.

D. Stormwater discharges to Rockaway River watershed.

Major Water Body: Rockaway River

5. Coordinates of Center of Site in State Plane Coordinates or Decimal Degrees (select one):

X; (Latitude) 489402 Y; (Longitude) 753572

6. Attachments

A. $300.00 Fee - Payable to "Treasurer - State of New Jersey"

(Circle payment type and enter document number below)
Check No. * _____ Voucher No. _____

*Federal Superfund Site. Not Applicable.

For information contact the local Soil Conservation District (see page 4)

RFA_CONST_2_26_04

RFA Certification
Construction General Permit
NJPDES General Permit No. NJG0088323

"I certify under penalty of law that this Request for Authorization and all attached documents were prepared under my direction or supervision in accordance with a system designed to assure that qualified personnel properly gather and evaluate the information submitted. Based on my inquiry of the person or persons who manage the system, or those persons directly responsible for gathering the information, the information submitted is, to the best of my knowledge and belief, true, accurate and complete. As far as I know, none of the stormwater discharges for which this Request for Authorization is submitted are excluded from authorization by part I.A.2, A.3 or B of NJPDES Permit No. NJG0088323.

"I am aware that pursuant to the Water Pollution Control Act (see N.J.S.A. 58:10A-10f(2) and (3)), there are significant civil and criminal penalties for making a false statement, representation or certification in any application, record, or other document filed or required to be maintained under that Act, including fines and/or imprisonment."

WHO MUST SIGN?

FOR A CORPORATION: a "responsible corporate officer" or duly authorized representative. A "responsible corporate officer" is (i) a president, secretary, treasurer, or vice-president of the corporation in charge of a principal business function, or any other person who performs similar policy or decision-making functions for the corporation; or (ii) the manager of one or more manufacturing, production, or operating facilities employing more than 250 persons or having gross annual sales or expenditures exceeding $25 million (in second-quarter 1980 dollars), if authority to sign documents has been assigned or delegated to the manager in accordance with corporate procedures.

FOR A PARTNERSHIP OR SOLE PROPRIETORSHIP: a general partner or the proprietor, respectively, or duly authorized representative.

FOR A MUNICIPALITY, STATE, FEDERAL OR OTHER PUBLIC AGENCY: either a principal executive officer or ranking elected official, or duly authorized representative.

A "responsible corporate officer", general partner, proprietor, principal executive officer of a public agency, or ranking elected official may assign his or her signatory authority for this Certification to a duly authorized representative, which is a named person or generic position having overall responsibility for facility operation or the permittee's environmental matters, by submitting a letter to the Soil Conservation District (see page 4) stating said authority and naming the person or position.

Facility Name: Rockaway Borough Superfund Site: East Main/Wall Street Plume Remediation
(print)

U.S. Environmental Protection Agency
(print, if applicable, name of corporation, partnership, or public agency submitting this certification)

(signature) (date) (print name)

RFA_CONST_2_26_04

Borough of Rockaway
~~One~~ East Main Street
Rockaway NJ 07866
(973)627-8035

CONSTRUCTION PERMIT

Date Issued: 11/03/2010
Permit # 10-00453

IDENTIFICATION Block 14 Lot 18 Qualifier

Work Site	UNION ST	Contractor	Ehrich Electric, Inc.
	ROCKAWAY BORO, NJ 07866	Address	27 Merry Lane
Owner in Fee	ROCKAWAY BOROUGH		East Hanover, NJ 07936
Address	UNION ST	Telephone	(973) 879-1175
	ROCKAWAY, NJ 07866	Lic. No. or Bldrs. Reg. No. Home Reg. No. or Exemption	
Telephone			

Is hereby granted permission to perform the following work:

[ ] BUILDING [ ] PLUMBING
[X] ELECTRICAL [ ] FIRE PROTECTION [ ] LEAD HAZARD ABATEMENT
[ ] ELEVATOR DEVICES [ ] ASBESTOS ABATEMENT [ ] DEMOLITION

DESCRIPTION OF WORK:
200 AMP TEMPORARY ELECTRICAL SERVICE. INSTALL MOTOR CONTROL CENTER.

V. FEE SUMMARY (Office Only)

1. Building	$0.00
2. Electrical	$117.00
3. Plumbing	$0.00
4. Fire Protection	$0.00
5. Elevator	$0.00
6. Plan Review	$0.00
7. Subtotal	$117.00
8. DCA State Fee	$8.50
9. Subtotal	$125.50
10. Certificate	$0.00
11. Subtotal	$125.50
12. Exemption (State and Local)	-$125.50
TOTAL	$0.00

NOTE: If construction does not commence within one (1) year of date of issuance, or if construction ceases for a period of six (6) months, this permit is void.

Estimated Cost of Work for Selected Subcode(s) $5,000.00

Construction Official

11/8/10
Date

REQUIRED INSPECTIONS

Construction work must be inspected in accordance with the State Uniform Construction Code Regulation N.J.A.C. 5:23-2.18. This agency will carry out such periodic inspections during the progress of work as are necessary to insure that work installed conforms to the requirements of the Uniform Construction Code.
The owner or other responsible person in charge of work must notify this agency when work is ready for any required inspections specified below. Requests for inspections must be made at least 24 hours prior to the time the inspection is desired. Inspections will be performed within three business days of the time for which they are requested. The work must not proceed in a manner which will preclude the inspection until it has been made and approval given.

☐ Required inspections for all subcodes for one and two family dwellings are the following:
1. The bottom of footing trenches before placement of footings, except that in the case of pile foundations, inspections shall be made in accordance with the requirements of the building subcode.
2. Foundations and all walls up to grade level prior to back filling.
3. Utility services, including septic.
4. All structural framing, connections, wall and roof sheathing and insulation; electrical rough wiring, panel and service installation; rough plumbing. The framing inspection shall take place after the rough electrical and plumbing inspections and after the installation of the heating, ventilation and/or air conditioning duct system. The insulation inspection shall be performed after all other subcode rough inspections and prior to the installation of any interior finish material.

☐ Additional required inspections for all subcodes of construction, for other than one- and two-family dwellings, are fire suppression systems, heat producing devices and Barrier Free subcode accessibility, if applicable.

☐ Required special inspections. The applicant by accepting the permit will be deemed to have consented to these requirements:

☐ A final inspection is required for each applicable subcode area before a final Certificate of Occupancy or Approval may be issued. The final inspections include the installation of all interior and exterior finish materials, sealing of exterior joints, mechanical system and any other required equipment; electrical wiring, devices and fixtures; plumbing pipes, trim and fixtures; tests required by any provisions of the adopted subcodes; Barrier Free accessibility, if applicable; and verification of compliance with NJAC 5.23-3.5, "Posting Structures".

☐ A complete copy of released plans must be kept on the job site.

ELECTRICAL SUBCODE
TECHNICAL SECTION

Date Received Control # 11-03-20.

Date Issued Permit # 10-00453

A. IDENTIFICATION—APPLICANT: COMPLETE ALL APPLICABLE INFORMATION. WHEN CHANGING CONTRACTORS, NOTIFY THIS OFFICE. CALL UTILITY DIG NO: 1-800-272-1000.

Block 14 Lot 18 Qualification Code

Work Site Location 122 JACKSON AVE ROCKAWAY. NJ 07866

Owner in Fee: Borough of Rockaway

Tel. (973) 627-2000 e-mail boroughclerk@RockawayBorough.org

Address EAST MAIN STREET ROCKAWAY NJ 07866 (street, municipality, zip code)

Contractor: Ehrich Electric Inc Tel. ( )

Address 27 McMy LANE E. HANOVER e-mail smew@ehrichelectric.com

Contractor License No. 10771 Exp. Date 3/12

Home Improvement Contractor Registration No. or Exemption Reason (if applicable):

Federal Emp. ID No. 223172967 FAX: (973) 781-1189

B. ELECTRICAL CHARACTERISTICS

Use Group Present Proposed

[ ] Pole/Pad # [X] Temporary [ ] Other

Building Occupied as Utility Co. JCP+L

Est. Cost of Elec. Work $ 5000.00

JOB SUMMARY (Office Use Only)

PLAN REVIEW — Date — Initial

[X] No Plans Required 11-2-10

Joint Plan Review Required:

[ ] Building [ ] Plumbing

[ ] Fire [ ] Elevator

[ ] Elec. Plans Approved

Date:

Approved by:

SUBCODE APPROVAL

[ ] CO [ ] CCO [ ] CA

Date:

Approved by:

INSPECTIONS	Dates (Month/Day)			
Type:	Failure	Failure	Approval	Initial
Rough				
Barrier-Free				
Trench				
Temp. Serv.				
Constr. Serv.				
TCO				
Other				
Service				
Final				
Barrier-Free				

Temp. Cut-In-Card Date Issued

Final Cut-In-Card Date Issued

Annual Pool Inspection

Date of Grounding and Bonding Certification

C. CERTIFICATION IN LIEU OF OATH

I hereby certify that I am the (agent of) owner of record and am authorized to make this application and perform the work listed on this application.

Applicant's Signature/Contractor's Seal and Signature

[X] Licensed Elec. Contractor [ ] Certif'd Landscape Irrigation Cont'r [ ] Exempt Applicant

D. TECHNICAL SITE DATA

DESCRIPTION OF WORK 200AMP Temporary Electrical Service, INSTALL motor control CENTER.

QTY.	SIZE	ITEMS	FEE (Office Use Only)
		Lighting Fixtures	
2		Receptacles	
		Switches	
		Detectors	
		Light Poles	
		Motors—Fract. HP	
		Emergency & Exit Lights	
		Communications Points	
		Alarm Devices/F.A.C. Panel	
2		TOTAL NUMBERS	$
		Pool Permit/with UW Lights	
		Storable Pool/Spa/Hot Tub	
		KW Elec. Range/Receptacle	
		KW Oven/Surface Unit	
		KW Elec. Water Heater	
		KW Elec. Dryer/Receptacle	
		KW Dishwasher	
		HP Garbage Disposal	
		KW Central A/C Unit	
		HP/KW Space Heater/Air Handler	
		KW Baseboard Heat	
		HP Motors 1/+ HP	
		KW Transformer/Generator	
1	200	AMP Service	
		AMP Subpanels	
1	30A	AMP Motor Control Center	
		KW Elec. Sign/Outline Light	

Administrative Surcharge $

Minimum Fee $

State Permit Surcharge Fee $

TOTAL FEE $

TO REORDER - ACTION PRINT SOLUTIONS - 800-298-1000