SDMS Document
122557

DuPont Legal, Environment Group
Bernard J. Reilly, Corporate Counsel
1007 Market Street, D7082-A
Wilmington, Delaware 19898
Bernard.J.Reilly@usa.dupont.com
PH (302) 774-5445
FAX (302) 351-7203

May 30, 2012

EXPRESS MAIL

Frank Cardiello, Esq.
Office of Regional Counsel
U.S. Environmental Protection Agency, Region 2
290 Broadway, 17th Floor
New York, New York 10007-1866

Re: Raritan Bay Slag Superfund Site, Request for Information, Letter dated April 16, 2012 from Nicoletta DiForte, EPA Region 2 to Linda J. Fisher, DuPont Company

Dear Mr. Cardiello,

The referenced Request for Information was referred to me to respond on behalf of E. I. du Pont de Nemours and Company. I attach our response.

Sincerely,

Bernard J. Reilly
Corporate Counsel

Attachments

RECEIVED
MAY 31 2012

REQUEST FOR INFORMATION

Answer the following questions regarding E. I. du Pont de Nemours and Company ("DuPont").

1. EPA is aware that between 1970 and 1975 DuPont maintained an ongoing business relationship with NL Industries, Inc. Describe any relationship, arrangements or agreements that DuPont had with **NL Industries' Perth Amboy, NJ facility ("NL Industries")** between 1960 and 1980. Provide any documents related thereto, including;

   a. all contracts and agreements or other communications with any parties.
   b. bills of lading issued by or to DuPont; and
   c. bills or invoices issued by or to NL Industries.

   Response: DuPont arranged a search of its files for any relationship with NL Industries of Perth Amboy, no responsive documents were found. We did find a single page document dated 1981 regarding the NL Industries Pedricktown, NJ, location, this document lists "OW", referring to Outside Wastes shipments to DuPont Chambers Works, Deepwater, NJ, that DuPont Site had a commercial wastewater treatment facility, this document indicates wastewater shipments received at Chambers Works, copy of that document Attachment 1.

2. USEPA is aware that DuPont was selling, consigning, transporting, disposing, treating or purchasing lead, lead battery casings, lead slag, dross, oxides , mud, furnace matte, lead "bottoms" or "buttons," or other lead-bearing materials to NL Industries. Please provide:

Response: Our search for records and interviews with retirees did not find any references to lead battery casings, mud furnace matte, bottoms or buttons. However, one retiree, Mr. Russell V Atkinson, recalled that the tetraethyl lead (TEL) manufacturing operation at Chambers Works in Deepwater, NJ, created two different lead bearing waste streams that were sent off-site to recyclers. One stream was the lead dross from the lead furnace, the other was lead dust from the baghouse. He recalls the slag waste stream was placed on gondola rail cars and shipped to a recycler in Baton Rouge, Louisiana. He recalls the lead dust was placed in boxes lined with plastic bags on pallets that were shipped by truck to recyclers, he recalls the name RSR in Middleton, NY, likely that is Revere Smelting and Refining.

We found in our files a copy of the draft DuPont response to a 37 page questionnaire from EPA to our Chambers Works facility asking information on waste streams generated in 1981, Attachment 2, the copy does not have a DuPont signature. On page 12 it includes an entry of 17a for "EPA Waste Number" K069 and D008, with "DESCRIPTION OF WASTE: LEAD FLUE DUST AND WASTEWATER FROM LEAD ALKYL MFG. The response indicates 60,550 tons handled in 1981, it is not clear from this response how much of this is flue dust versus wastewater for on-site treatment. Page 14 of the response includes the same combination of K069 and D008, answer 17d indicates the wastes were stored in both containers and surface impoundments. It also indicates 60,000 tons were treated in 1981, this suggests that 60,000 tons were wastewater, if that is correct then the remainder, 550 tons, would likely be the flue dust. Response 17g for this same stream indicates "treated in surface impoundments", again suggesting wastewater.

This same document indicates on page 21, response 23, shipments received, the same percentage numbers indicated on the single sheet (Attachment 1 referenced above) on "OW", which seems to confirm the entry on that sheet for N.L Industries Pedricktown, NJ is for shipments into Chambers Works of wastewater, not shipments to any N.L. facility.

The same document page 30 response 49a indicates waste streams shipped off-site for use, reuse, recycling or reclamation: K069 and D008, Description: emission control dust from secondary lead smelting, the footnote indicates it was sent to OHGITANI KOGYO COMPANY LTD in Japan. The quantity shipped in 1981 is indicated as 484 tons.

We also found in our files a copy of a letter dated August 10, 1982, entitled Arthur D. Little/RCRA Survey apparently regarding tetra ethyl lead manufacturing at Chambers Works, Attachment 3. This letter indicates on page 6 "Annual Generation rate of flue dust: All sources: 1.1 M/lb (S-1, S-3, S-5, S-7)". [Note: the M has a bar over it, assume that means a million]

On page 9 of this report : "Lead is recovered from the spray furnaces as slag and dust. There is no significant molten lead recovered for recycle back to the production processes."

Page 10: "Flue dusts from the TML furnaces and spray furnaces are not strictly segregated. There is no flue dust generated directly from the continuous TEL operation."

Also found in our files is a handwritten letter dated 6/1/82 attaching a letter from Arthur D. Little of May 26, 1982, Attachment 4, it includes as Figure I a chart for Continuous TEL Production indicating S-1 is baghouse flue dust sold for lead recovery, and S-2 is from the lead melting furnace, it is slag sold for lead recovery. Figure II is a chart for Batchwise TEL Production, indicates S-3 is baghouse flue dust sold for lead recovery and S-4 is Slag Sold for Lead

Recovery. Figure III is a chart for Batchwise TML Production, S-5 is baghouse flue dust sold for lead recovery, S-6 is slag sold for lead recovery. Figure V is a chart for the Lead Recovery Unit, S-7 is flue dust sold for lead recovery, S-8 is slag sold for lead recovery.

Another document is a handwritten note marked Arthur D Little/EPA Study, that has a date of 5/6/82, Attachment 5. It attaches a "Rough Draft" of Waste Generation of Organolead Manufacture. Page 12 of this document identifies Waste Stream B as solid baghouse dust, 1.1x10 to the 6th in 1981, assume that is 1.1 million pounds, or 550 tons. This stream is described at 32 to 68 lb/cubic foot density, brownish to yellowish powder like solid, EPA number K069, 50-70% lead as oxides, carbonates, and/or halide compounds.

The remaining document may have been another attachment to the "Rough Draft", it has a "Figure 2" showing "Slag" coming from "Reverb Furnaces" and "Dust" coming from "Bag Houses". Figure 3 for Batch TEL has similar streams. Figure 6 for TML manufacturing refers to Figure 7, it shows "Slag" from the spray furnace, and "Dust" from the baghouse.

We reviewed copies of the documents, apparently from NL Industries files, provided by Mr. Frank Cardiello by letter of April 24, 2012, indicating transactions at NL Perth Amboy with an entry of "DuPont Slag, Dythol, Lead Dross", and "DuPont Slag & Lead Dross". We have found no person or records that indicate Chambers Works or any other DuPont site made shipments to NL Perth Amboy. The sheet headed "Perth Amboy Inventory Disposition", undated, for the entry "DuPont Slag – 85% Pb" Inventory 700 Tons indicates Disposition: "Cleveland Reverb (Chunks) Sell Outside", so apparently that material not processed at Perth Amboy.

We find the remaining NL Industries documents marked "Invoice" and "Pricing Record Copy" contradictory as to the place of shipment. For example, the "Invoice" dated 4/29/75, Invoice Number PA-41 lists 32 shipments, Sold To: Northeast Region, Shipped From: Perth Amboy, Commodity: DuPont Slag, each with a shipment number, for example, M-5592 date 4/18, and weight 42,560 assume pounds. However, the attached documents which appear to be the shipping papers for each shipment, marked "Pricing Record Copy" for the shipment marked M-5592, indicates Shipped From: "S&R – PA" and FOB: "PA", Sold to and Shipped to: NL INDS, Pedricktown, N.J by Lee's Trucking. We are unable to reconcile the "Invoice" indicating shipped from Perth Amboy, and the Pricing Record Copy indicating shipped from S&R-PA for what surely is the same shipment since it has the same shipping number and weight. In no event do these documents suggest DuPont material was processed at Perth Amboy.

a. the year(s) during which such transactions occurred;

b. the physical state, nature (including, e.g., chemical composition, toxicity) and volume of the materials which were the subject of the transactions;

c. Provide copies of any documents or records pertinent to or relied upon in answering any part of this question.

3. Do you have any reason to believe that any of the following may have been taken by DuPont, including any predecessor(s), subsidiary or division of DuPont, and later transported to NL Industries between 1960 and 1980. Please provide a separate Yes or No answer to each of a through f, below:

a. any hazardous substance; Response: No.

b. any waste, by-products, recyclable, off specification or "off-spec" material; Response: No.

c. any slag, dross, oxides or battery mud (see definition numbers);

Response: No.

d. any solid waste of any type, including battery plates and battery casings; Response: No.

c. any industrial waste; Response: No.

f. lead in any form (alone or in combination with any other metal(s); Response: No. or

g. any combination of the above. Response: No.

4. For each Yes answer to any of items in Question 3 above, please provide the specific basis for the answer, including;

a. the description of the substances or materials transported to or from an NL Industries facility. Include the common name or descriptive term of such waste or by-product (e.g., "spent battery cases," "furnace mattes," "lead bottoms," "slag," "dross," "off-specification product");

b. the chemical characterization, composition and quantities (by volume and/or weight, number of drums or containers, tons of slag, etc); transported to or from NL Industries;

c. the date(s) such substances or materials were transported to or from NL Industries;

d. the hazardous substances in such materials;

e. all records relating to such transactions, including, but not limited to;

5. Provide copies of all tests, analyses, and analytical results concerning every type of material DuPont ever transported to NL Industries. Response: we are not aware of any DuPont material being shipped to NL Industries.

6. If you do not have documents responsive to the previous question but believe others do, identify who might have such documents and the basis for such a belief. Response: None.

7. Identify by name, address, title and telephone number every past and present employee of DuPont, or any other person, whom you have reason to believe has knowledge of hauling and/or disposal of any material to/from the NL Industries facility between 1960 and 1980. Response: None.

8. Identify each individual who assisted or was consulted in the preparation of the response to this Request for Information and specify the question with which each such person assisted in responding. Response DuPont Retirees Russell V Atkinson, Benjamin Z Miller, Alfred H Pagano, Henry E Burman, Vincent Gioia; DuPont Employees Scott Northey, George F Widger, Jr., Bernard J Reilly.

9. Identify any other person (e.g., individual, company, partnership, etc.) having knowledge of facts relating to the questions which are the subject of this inquiry. For each such person that you identify, provide the name, address, and telephone number of that person, and the basis of your belief that he or she has such knowledge. For past and present employees, include their job title and a description of their responsibilities. Response: None to our knowledge.

CERTIFICATION OF ANSWERS TO REQUEST FOR INFORMATION

State of Delaware

County of New Castle

I certify under penalty of law that I have personally examined and am familiar with the information submitted in this document (response to EPA Request for Information) and all documents submitted herewith, and that based on my inquiry of those individuals immediately responsible for obtaining the information, I believe that the submitted information is true, accurate, and complete, and that all documents submitted herewith are complete and authentic unless otherwise indicated. I am aware that there are significant penalties for submitting false information, including the possibility of fine and imprisonment. I am also aware that I am under a continuing obligation to supplement my response to EPA's Request for information if any additional information relevant to the matters addressed in EPA's Request for Information or my response thereto should become known or available to me.

Bernard J. Reilly
Name

Corporate Counsel
Title

Bernard J. Reilly
Signature

Sworn to before me this day of May 30, 2012.

Denise A. Crew
Notary Public

DENISE A. CREW
MY COMMISSION EXPIRES JAN. 11, 2015
NOTARY PUBLIC
STATE OF DELAWARE

Attachment 1

DuPont Response of May 30, 2012 to Raritan Bay Information Request

No. 23.

1981

OW No.*	Generator's Name & Address.	Tons Haz. Waste	%
1152	North American Elkton, Md.	8389	7.4
	TANK CAR WASHING -- DETERGENT WASH		
1234	N. L. Industries Pedricktown, N.J.	6553	5.7
1237	LEAD FROM BATTERIES		
1238	LEACHATE FROM LANDFILL		
1031	Mallack, Inc. Swedesboro, N.J.	5906	5.2
	TRUCK WASHING WASTE		
1045	Smith Kline Chem. Swedeland, Pa.	5475	4.8
1174	Exxon Corp. Linden, N.J.	4035	3.5

(Using 114,091 total tons)

Dupont Co = 7%

Attachment 2

DuPont Response of May 30, 2012 to Raritan Bay Information Request

OMB #: 2000-0424
Expires: December 31, 1982

U.S. ENVIRONMENTAL PROTECTION AGENCY
HAZARDOUS WASTE TREATMENT, STORAGE AND DISPOSAL
GENERAL QUESTIONNAIRE

CERTIFIED MAIL # 660415
NJD002385730 IN TG

C132803

CASSEDY GEORGE SUPERINTENDENT
E I DUPONT DE NEMOURS AND CO INC.
CHAMBERS WORKS, ROUTE 130
DEEPWATER NJ 08023

PLEASE RECORD THE FOLLOWING INFORMATION, ONLY IF DIFFERENT FROM LABEL ABOVE.

Name of Facility: _____

Facility EPA
Identification Number: |__|__|__|__|__|__|__|__|__|__|__|__|

Mailing Address: _____
STREET OR P.O. BOX

_____
CITY STATE ZIP CODE

1. Please record the location of this facility.*

*PLEASE GIVE THE ACTUAL PHYSICAL LOCATION OF THE FACILITY CORRESPONDING TO THE EPA IDENTIFICATION NUMBER ABOVE, RATHER THAN ITS MAILING ADDRESS.

ADDRESS: SAME AS ABOVE

CITY: SAME COUNTY: SALEM /68-70

STATE: SAME ZIP CODE: SAME /71-72

2. Whom should we contact for follow-up at this facility?

NAME: ALFRED H. PAGANO

TITLE: SENIOR SUPERVISOR

PHONE NUMBER: |6|0|9| - |2|9|9| - |5|0|0|0| EXTENSION: |4|1|0|6|
AREA CODE

3. Please indicate the type(s) of hazardous waste activity(ies) in which this installation was engaged during the 1981 calendar year. [CIRCLE ALL CODES THAT APPLY]

a. Hazardous waste generation.	(01)		/73-74
b. Hazardous waste treatment	(02)	GO ON TO QUESTION 4	/75-76
c. Hazardous waste storage	(03)		/77-78
d. Hazardous waste disposal.	(04)		/79-80
e. Hazardous waste transportation.	(05)		/81-82
f. Recycling of hazardous waste.	06		/83-84
g. None of the above	07		/85-86

IF CODES "02", "03" AND/OR "04" ARE CIRCLED, PLEASE GO TO QUESTION 4.

IF YOU HAVE NOT CIRCLED CODES "02," "03" OR "04," PLEASE SIGN THE CERTIFICATION STATEMENT ON PAGE 37 AND RETURN THIS QUESTIONNAIRE TO EPA.

4. What was the year in which waste management operations first began at this facility? (That is, in what year was the original construction/development of the waste management operations completed?)

YEAR WASTE MANAGEMENT BEGAN: 1979 /87-90

5. Please give the sizes of each of the following waste management areas at this facility. [ENTER SIZES AND CIRCLE UNIT CODE BELOW. PLEASE USE THE SAME UNIT OF MEASURE FOR THE ENTIRE TABLE] |02|

		Size of area	
a.	Landfill	71,700	/16-23
b.	Surface impoundments	174,240	/24-31
c.	Waste piles	184	/32-39
d.	Incinerators	15322	/40-47
e.	Land treatment, application, or farming	—	/48-55
f.	Treatment tank areas	30	/56-63
g.	Container storage areas	5458	/64-71
h.	Storage tank areas	621	/72-79
i.	Underground injection wells (surface operation area only)	—	/80-87
j.	Recycling	2100	/88-95
k.	Common waste management area	—	/96-103
l.	Other waste management operations	~~224,944~~ Remove	/104-111
m.	TOTAL WASTE MANAGEMENT AREA AT FACILITY	269,165 ~~272,099~~	/112-119
n.	TOTAL AREA OF FACILITY	3,407,280	/120-127

[CIRCLE ONE]:

Square feet 01

Square yards . . . . . (02)

Acres 03

Other [SPECIFY]: _____ 04

/128-129

6. Please complete the following table for the employees engaged in the waste management operations at this facility. |03|

ON LINE 6a: Enter the usual number of employees from each of the occupation categories who are engaged in the waste management operations.

ON LINE 6b: Enter the average hourly wage of the employees within each occupational category who are engaged in waste management operations. [IF THIS INFORMATION IS NOT AVAILABLE SEPARATELY FOR WASTE MANAGEMENT EMPLOYEES, PLEASE CHECK HERE ___ AND GIVE THE INFORMATION, BY OCCUPATIONAL CATEGORY, FOR THE ENTIRE FACILITY] /16

ON LINES 6c THROUGH 6n: Indicate the total number of person-hours per week devoted to each of the listed operations by the waste management employees in each of the occupational categories. [FOR EXAMPLE, IF THREE LABORATORY WORKERS USUALLY SPEND TEN HOURS PER WEEK EACH ENGAGED IN ACTIVITIES RELATED TO THE LANDFILL OPERATION AT THIS FACILITY, ENTER "30" ON LINE 6c UNDER THE COLUMN LABELED "LABORATORY AND PROFESSIONALS"]

	Laboratory & professionals	Drivers & equipment operators	All other skilled employees	Non-skilled employees	TOTAL	
6a. Number of employees engaged in waste management operations at this facility	87	34	437	6	563	/17-36
6b. Average hourly wage for waste management employees in each occupational category	17.12	15.67	15.64	10	58.43	/37-56
6c. Total person-hours per week in landfill operations	40	40	5	240	325	/57-81
6d. Total person-hours per week in surface impoundment operations	14	122	28	—	164	/82-106
6e. Total person-hours per week in waste piles operations	1	—	—	—	1	|04| /16-40
6f. Total person-hours per week in incinerator operations	80	200	241	—	521	/41-65
6g. Total person-hours per week in land treatment (including land application, land farming) operations	—	—	—	—	—	/66-90

	Laboratory & professionals	Drivers & equipment operators	All other skilled employees	Non-skilled employees	TOTAL	
6h. Total person-hours per week in treatment tank operations	2	–	20	–	22	/91-115
6i. Total person-hours per week in container storage operations	5	94	16	–	115	|05| /16-40
6j. Total person-hours per week in storage tank operations	5	40	12	–	57	/41-65
6k. Total person-hours per week in underground injection well operations	–	–	–	–	–	/66-90
6l. Total person-hours per week in recycling operations	–	120	7	–	127	/91-115
6m. Total person-hours per week in other waste management operations	20	40	–	–	60	|06| /16-40
6n. Total person-hours per week in ALL waste management operations at this facility [TOTAL ON LINE 6n SHOULD EQUAL THE SUM OF LINES 6c THROUGH 6m]:	167	656	329	240	1392	/41-65

7. In the table below, please list the primary SIC (Standard Industrial Classification) code of this facility, and up to three secondary SIC codes, if more than one code is required to describe this facility. [IF YOU DO NOT KNOW THE SIC CODE(S) FOR THIS FACILITY, PLEASE SELECT THE MOST APPROPRIATE CODE(S) FROM APPENDIX C IN THE GENERAL INSTRUCTIONS]

a. Primary SIC code	2810 10	/66-69
Secondary SIC codes [PLEASE LIST IN DESCENDING ORDER OF IMPORTANCE]:		
b.	2816 15	/70-73
c.	2816 19	/74-77
d.		/78-81

8. Please specify the ownership status of this facility. That is, is the facility owned by the federal government, a state government, a local government (such as a city, town, county or parish), or is it privately owned? [CIRCLE ONLY ONE CODE]

Solely owned by federal government 01
Solely owned by state government 02
Solely owned by local government 03
Privately owned. 04
Other [SPECIFY]: _____ 05

/82-83

9. Please specify the status of the operator of this facility. That is, is the facility operated by the federal government, a state government, a local government (such as a city, town, county, or parish), or is it privately operated? [CIRCLE ONLY ONE CODE]

Solely operated by federal government. 01
Solely operated by state government. 02
Solely operated by local government. 03
Privately operated 04
Other [SPECIFY]: _____ 05

/84-85

10. What was the total quantity of waste (both hazardous and nonhazardous) that this facility treated, stored or disposed on this site during 1981? [ENTER QUANTITY AND CIRCLE UNIT CODE]

> NOTE: WHAT IS DESIRED HERE IS THE QUANTITY OF WASTE THAT "CAME THROUGH THE FRONT DOOR," OR ENTERED THE FACILITY'S TREATMENT, STORAGE, OR DISPOSAL OPERATIONS, IN 1981, COUNTING ONLY ONCE ANY QUANTITIES OF WASTES OR WASTE MIXTURES THAT WERE REPROCESSED THROUGH MULTIPLE TECHNOLOGIES, OR TREATMENT, STORAGE, OR DISPOSAL CHAINS.

QUANTITY OF WASTE HANDLED: * 45,353,102 (SEE NOTE) /86-94

[CIRCLE ONE]:

Metric tonnes. 01

English (or short) tons. 02

Gallons. 03

Other [SPECIFY]: _____ 04

/95-96

11. What was the total quantity of waste (both hazardous and nonhazardous) that this facility could have treated, stored or disposed on site during 1981, if the facility had been operating at full capacity the whole year? [SEE NOTE TO QUESTION 10. ENTER QUANTITY AND CIRCLE UNIT CODE]

QUANTITY THAT COULD HAVE BEEN HANDLED: * 623,222 (SEE NOTE) /97-105

[CIRCLE ONE]:

Metric tonnes. 01

English (or short) tons. 02

Gallons. 03

Other [SPECIFY]: _____ 04

/106-107

* APPROXIMATION

NOTE: QUESTION 10 – THIS NUMBER INCLUDES THE SURFACE IMPOUNDMENTS FLOW THROUGH CAPACITY WHICH IS ≅ 45,000,000 TONS/YR.

QUESTION 11 – THIS NUMBER ONLY INCLUDES FILL CAPACITY OF THE SURFACE IMPOUNDMENTS

12. What was the total quantity of hazardous waste that this facility treated, stored or disposed on site during 1981? [SEE NOTE TO QUESTION 10. ENTER QUANTITY AND CIRCLE UNIT CODE]

QUANTITY OF HAZARDOUS WASTE HANDLED: * 45,330,502 /108-11

[CIRCLE ONE]:

Metric tonnes. 01

English (or short) tons. . . . . (02)

Gallons. 03

Other [SPECIFY]: _____ 04

/117-11

13. What was the total quantity of hazardous waste that this facility could have treated, stored or disposed on site during 1981, if the facility had been operating at full capacity the whole year? [SEE NOTE TO QUESTION 10. ENTER QUANTITY AND CIRCLE UNIT CODE]

QUANTITY OF HAZARDOUS WASTE THAT COULD HAVE BEEN HANDLED: * 547,222 (SEE NOTE) /119-12

[CIRCLE ONE]:

Metric tonnes. 01

English (or short) tons. . . . . (02)

Gallons. 03

Other [SPECIFY]: _____ 04

/128-1

14. During 1981, what percentage of the hazardous waste (specified in Question 12) entered into the treatment, storage and/or disposal operation by: |07|

	Percent	
a. Containers.	.002 %	/16-18
b. Tank trucks	.252 %	/19-21
c. Dump trucks	.122 %	/22-24
d. Railroad cars	0 %	/25-27
e. Pipeline.	.008 %	/28-30
f. Other [SPECIFY]: WASTE PILE	.001 %	/31-33
CONTAMINATED CONVEYANCE SYSTEM	99.615 %	
TOTAL SHOULD EQUAL	100 %	

/34-35

* APPROXIMATION

NOTE: QUESTION 13 - THIS FACILITY DOES NOT DISTINGUISH BETWEEN HAZARDOUS AND NON-HAZARDOUS WASTE, (WITH ONE EXCEPTION, SANITARY LANDFILL). THEREFORE, THE CAPACITY IS THE TOTAL NUMBER OF WASTE OF ANY TYPE WHICH CAN BE HANDLED.

15. Please provide the following information in the table below.

LINE A: Enter the quantities of wastes (both hazardous and nonhazardous) that were disposed of, treated, and/or stored, at the facility during 1981; [SEE NOTE BELOW]

LINE B: Enter the quantities of wastes (both hazardous and nonhazardous) that could have been disposed of, treated, and/or stored, at the facility during 1981, if the facility had been operating at full capacity the whole year; [SEE NOTE BELOW]

LINE C: Enter the quantities of hazardous wastes that were disposed of, treated, and/or stored, at the facility during 1981; [SEE NOTE BELOW]

LINE D: Enter the quantities of hazardous wastes that could have been disposed of, treated, and/or stored, at the facility during 1981, if the facility had been operating at full capacity the whole year. [SEE NOTE BELOW]

ENTER QUANTITIES ON THE TABLE BELOW AND CIRCLE THE UNIT CODE BELOW THE TABLE. PLEASE USE THE SAME UNIT OF MEASURE FOR ALL ANSWERS ON THE TABLE.

NOTE: TOTALS IN LINES A THROUGH D MAY EQUAL OR EXCEED ASSOCIATED TOTAL QUANTITIES PROVIDED IN QUESTIONS 10, 11, 12 AND 13, DUE TO MULTIPLE PROCESSING OF INDIVIDUAL WASTES OR WASTE MIXTURES. WHAT IS DESIRED HERE IS THE TOTAL QUANTITY OF WASTE THAT WAS INPUT, OR COULD BE INPUT, TO EACH PROCESS DURING 1981, REGARDLESS OF WHATEVER OTHER PROCESSES MAY HAVE BEEN APPLIED PREVIOUSLY OR SUBSEQUENTLY TO THE SAME WASTE, OR PORTIONS THEREOF.

	Finally disposed of at facility[1] ___ Did not dispose in 1981	Treated at facility[2] ___ Did not treat in 1981	Stored at facility[3] ___ Did not store in 1981	
				/36-38
a. Quantities of wastes that were:	*74,320	*67,856	*45,373,946	/39-65
b. Quantities of wastes that could have been: (SEE NOTE)	*186,667	*83,750	*352,805	/66-92
c. Quantities of hazardous wastes that were:	*55,570	*64,006	PLACE 12:# 45,330,502 *45,366,926	/93-119
d. Quantities of hazardous wastes that could have been:	*116,667	SEE b ABOVE	SEE b ABOVE	08 /16-42

[CIRCLE ONE]:

Metric tonnes. 01

English (or short) tons. . . . . (02)

Gallons. 03

Other [SPECIFY]: _____ 04 /43-44

[1] Include quantities disposed via: landfill, land application (land treatment, land farming), disposal surface impoundments, underground injection wells, ocean disposal, other disposal processes.

[2] Include quantities chemically, physically, biologically, or thermally treated in: tanks, treatment surface impoundments, incinerators, other treatment processes.

[3] Include quantities stored in: containers, tanks, waste piles, storage surface impoundments, other storage processes.

* APPROXIMATION

NOTE: SAME RESPONSE AS QUESTION 13

16. In the table below, please indicate which waste processing technologies were operating at this facility during 1981. [CIRCLE ONE CODE FOR EACH TECHNOLOGY]

Circle code 1 if the technology was in existence at the facility during 1981, was operational during 1981, and processed hazardous waste during 1981;

Circle code 2 if the technology was in existence at the facility during 1981, was operational during 1981, but did not process hazardous waste during 1981;

Circle code 3 if the technology was in existence at the facility during 1981, but was not operational during 1981;

Circle code 4 if the technology was under construction at the facility during 1981.

Circle code 5 if the technology was not in existence and not under construction at the facility during 1981.

Waste processing technology	In existence, operational, processed hazardous waste in 1981	In existence, operational, did not process hazardous waste in 1981	In existence, not operational in 1981	Under construction in 1981	Not in existence in 1981	
a. Underground injection well	1	2	3	4	(5)	/45
b. Landfill	(1)	2	3	4	5	/46
c. Land application area	1	2	3	4	(5)	/47
d. Ocean disposal	1	2	3	4	(5)	/48
e. Disposal surface impoundment	1	2	3	4	(5)	/49
f. Treatment tanks	(1)	2	3	4	5	/50
g. Treatment surface impoundment	(1)	2	3	4	5	/51
h. Incinerator	(1)	2	3	4	5	/52
i. Storage containers	(1)	2	3	4	5	/53
j. Storage tanks	(1)	2	3	4	5	/54
k. Waste piles	(1)	2	3	4	5	/55
l. Storage surface impoundment	(1)	2	3	4	5	/56
m. Other [SPECIFY]: ____ THERMAL TREATMENT	1	(2)	3	4	5	/57 /58-59

17. Please complete the following table for the ten hazardous wastes handled in largest volume by this facility in 1981. [PLEASE RECORD THE EPA WASTE NUMBERS OF WASTES HANDLED, BEGINNING WITH THE LARGEST VOLUME WASTE, IN THE COLUMNS ACROSS THE TOP OF THE TABLE. A LIST OF EPA WASTE CODES IS INCLUDED IN THE GENERAL INSTRUCTIONS AS APPENDIX A.]

EPA WASTE NUMBER:	K069 D008	SEE NOTE	K011
AND DESCRIPTION OF WASTE:	LEAD FLUE DUST AND WASTEWATER FROM LEAD ALKYL MFG.	SLUDGE FROM WASTEWATER TREATMENT PLANT	HEAVY END FROM FRACTIONATION ETHYL CHLORIDE
17a. What was the total quantity of this waste that was handled by this facility during 1981? [ENTER QUANTITY AND CIRCLE UNIT CODE FOR EACH WASTE]			
QUANTITY HANDLED IN 1981:	60,550	55,447	3466
[CIRCLE ONE]:			
Metric tonnes	01	01	01
English (or short) tons .	(02)	(02)	(02)
Gallons	03	03	03
Other [SPECIFY]:.	04	04	04
17b. Was this waste stored at this facility? [CIRCLE ONLY ONE CODE]			
Yes [GO TO QUESTION 17c] . . .	(1)	1	1
No [SKIP TO QUESTION 17e FOR THIS WASTE].	2	(2)	(2)
17c. What was the total quantity that entered storage in 1981? [ENTER QUANTITY AND CIRCLE UNIT CODE]			
TOTAL QUANTITY STORED . .	60,550		
[CIRCLE ONE]:			
Metric tonnes	01	01	01
English (or short) tons .	(02)	02	02
Gallons	03	03	03
Other [SPECIFY]:.	04	04	04

NOTE - F002, F003, F005, F006, F007
K050, K051, K052

NOTE: D002, D005, K026, P014, P022, P023, P024, P028, P048, P053, P077, P086, P100, P101
P117
U001-U004, U008, U009, U012, U013, U017, U019, U023, U029, U031, U037, U043-U045
U047, U048, U051-U057, U067, U070-U072, U076-U078, U080, U092, U101, U104-U108
U110, U112, U113, U115, U117, U118, U122-U124, U133, U138, U140, U147, U154, U159, U161,
U162, U165, U167-U170, U181, U189, U190, U194, U196, U201, U209, U210, U211, U213, U220-U223, U226
U228, U229, U239

D001 NITRO-CELLULOSE	D001 SPENT ISO-PROPYL, ISO BUTYL ALCOHOL	SEE NOTE 2 LABORATORY SAMPLES	D001 HEXANE DISTILLATE	D001 FILTRATE ACETIC ACID	D001 ETHYL ACETATE	D001 TOLUENE WASH	
							/60-99
							09
500	145	80	64	54	46	28	/16-105
01	01	01	01	01	01	01	
02	02	02	02	02	02	02	
03	03	03	03	03	03	03	
04	04	04	04	04	04	04	
							/106-125
							10
1	1	1	1	1	1	1	
2	2	2	2	2	2	2	/16-25
0	145	80	64	54	46	28	/26-115
01	01	01	01	01	01	01	
02	02	02	02	02	02	02	
03	03	03	03	03	03	03	11
04	04	04	04	04	04	04	
							/16-35

QUESTION 17 IS CONTINUED ON THE NEXT PAGE.

EPA WASTE NUMBER:	K069 |D|0|0|8|	|_|_|_|_|_|	|K|0|1|8|
17d. What was the storage method for this waste? [CIRCLE ONLY ONE CODE. IF MORE THAN ONE METHOD WAS USED FOR A SINGLE WASTE TYPE, CIRCLE CODE "05" AND SPECIFY CODES "01" THROUGH "04," CORRESPONDING TO THE METHODS USED, IN ORDER FROM THE MOST PREVALENTLY USED METHOD TO THE LEAST]			
Storage in tanks	01	01	01
Storage in containers. . .	02	02	02
Storage in surface impoundments	03	03	03
Storage in waste piles . .	04	04	04
Other [SPECIFY]:	(05)	05	05
	03-02		
17e. Was this waste treated at this facility? [CIRCLE ONLY ONE CODE]			
Yes [GO TO QUESTION 17f] . .	(1)	1	(1)
No [SKIP TO QUESTION 17h FOR THIS WASTE].	2	(2)	2
17f. What was the total quantity treated in 1981? [DO NOT "DOUBLE COUNT" AMOUNTS OF A SINGLE WASTE THAT WERE PUT THROUGH MULTIPLE TREATMENT PROCESSES. ENTER QUANTITY AND CIRCLE UNIT CODE]			
TOTAL QUANTITY TREATED	60,000		3466
[CIRCLE ONE]:			
Metric tonnes. . . .	01	01	01
English (or short) tons. . . .	(02)	02	(02)
Gallons.	03	03	03
Other [SPECIFY]: . .	04	04	04

0001	0001		0001	0001	0001	0001	
01	01	01	01	01	01	01	
02	02	02	02	02	02	02	
03	03	03	03	03	03	03	
04	04	04	04	04	04	04	
05	05	05	05	05	05	05	
							/36-55
1	1	1	1	1	1	1	
2	2	2	2	2	2	2	/56-65
							12
	145		64	54	46	28	/16-105
01	01	01	01	01	01	01	
02	02	02	02	02	02	02	
03	03	03	03	03	03	03	
04	04	04	04	04	04	04	
							/106-125

QUESTION 17 IS CONTINUED ON THE NEXT PAGE.

EPA WASTE NUMBER:	K069 |D|0|0|8|	|_|_|_|_|_|	|K|0|1|8|
17g. What treatment process was used for this waste? [CIRCLE ONLY ONE CODE. IF MORE THAN ONE METHOD WAS USED FOR A SINGLE WASTE TYPE, CIRCLE CODE "04" AND SPECIFY CODES "01" THROUGH "03," CORRESPONDING TO THE METHODS USED, IN ORDER FROM THE MOST PREVALENTLY USED METHOD TO THE LEAST]			
Treatment in tank(s) . . .	01	01	01
Treatment in surface impoundment(s)	(02)	02	02
Treatment by incineration	03	03	(03)
Other [SPECIFY]:	04	04	04
17h. Was this waste disposed at this facility? [CIRCLE ONLY ONE CODE]			
Yes [GO TO QUESTION 17i]. . . .	1	(1)	1
No [SKIP QUESTIONS 17i AND 17j FOR THIS WASTE]	(2)	2	(2)
17i. What was the total quantity disposed in 1981? [ENTER QUANTITY AND CIRCLE UNIT CODE]			
TOTAL QUANTITY DISPOSED:		55,447	
[CIRCLE ONE]:			
Gallons.	01	01	01
English (or short) tons	02	(02)	02
Metric tonnes.	03	03	03
Other [SPECIFY]:	04	04	04

0011	0011		0011	0012	0011	0011	
01	01	01	01	01	01	01	
02	02	02	02	02	02	02	
03	(03)	03	(03)	(03)	(03)	(03)	
04	04	04	04	04	04	04	
							/16-35
1	1	(1)	1	1	1	1	
(2)	(2)	2	(2)	(2)	(2)	(2)	/36-45
		80					/16-105
01	01	01	01	01	01	01	
02	02	(02)	02	02	02	02	
03	03	03	03	03	03	03	
04	04	04	04	04	04	04	
							/106-125

13

14

QUESTION 17 IS CONTINUED ON THE NEXT PAGE.

EPA WASTE NUMBER:	K069 D008		K017
17j. What disposal process was used for this waste? [CIRCLE ONLY ONE CODE. IF MORE THAN ONE METHOD WAS USED FOR A SINGLE WASTE TYPE, CIRCLE CODE "05" AND SPECIFY CODES "01" THROUGH "04," CORRESPONDING TO THE METHODS USED, IN ORDER FROM THE MOST PREVALENTLY USED METHOD TO THE LEAST]			
Disposal in injection wells.	01	01	01
Disposal in landfill . . .	02	(02)	02
Disposal in surface impoundments	03	03	03
Disposal by land application.	04	04	04
Other [SPECIFY]:	05	05	05

0001	0001		0001	0001	0001	0001
01	01	01	01	01	01	01
02	02	02	02	02	02	02
03	03	03	03	03	03	03
04	04	04	04	04	04	04
05	05	05	05	05	05	05

|15|

/16-35

18. During 1981, did this facility receive any hazardous waste for treatment, storage or disposal that was generated off site? [CIRCLE ONLY ONE CODE]

Yes [GO TO QUESTION 19]. . . . . (1) /36

No [SKIP TO QUESTION 25]. 2

19. What was the total quantity of hazardous waste received for treatment, storage or disposal by this facility from off-site sources during 1981? [ENTER QUANTITY AND CIRCLE UNIT CODE]

QUANTITY FROM
OFF-SITE SOURCES: 114,091 /37-45

[CIRCLE ONE]:

Metric tonnes. 01

English (or short) tons. . . . . (02)

Gallons. 03

Other [SPECIFY]: _____ 04

/46-47

20. What percentage of this quantity of hazardous waste (as specified in Question 19) was received in:

a. Containers. . . . . _____ % /48-50

b. Tank trucks . . . . . 100 % /51-53

c. Dump trucks . . . . . _____ % /54-56

d. Railroad cars . . . . . _____ % /57-59

e. Pipeline. . . . . _____ % /60-62

f. Other [SPECIFY]: _____ _____ % /63-65

TOTAL SHOULD EQUAL 100 % /66-67

21. What percentage of this quantity of hazardous waste (as specified in Question 19) came from sources owned by other firms?

PERCENT FROM SOURCES
OWNED BY OTHER FIRMS: 93 % /68-70

22. What percentage of this quantity of hazardous waste (as specified in Question 19) came from small generators (who are subject to the special provisions under RCRA)?

PERCENT FROM SMALL GENERATORS: 0 % /71-73

23. In Column A of the table below, list the SIC codes of the five industries from which this facility received the greatest quantity of hazardous waste for treatment, storage or disposal in 1981. [IF YOU DO NOT KNOW THE SIC CODES OF THESE INDUSTRIES, PLEASE SELECT THE APPROPRIATE CODES FROM APPENDIX C IN THE GENERAL INSTRUCTIONS.]

In Column B, indicate the percent of the total amount of hazardous waste received from off-site sources (specified in Question 19) that was received from each of the five industries.

COLUMN A SIC codes of five largest generators	COLUMN B Percent of total hazardous waste received	
a. 9910	7.4 %	/74-80
b. 2810	7 %	/81-87
c. 2810	5.7 %	/88-94
d. 9910	5.2 %	/95-101
e. 2810	4.8 %	/102-108

24. How was the hazardous waste content of waste shipments received by this facility during 1981 determined? Please specify the percentage of shipments for which:

a. Laboratory analyses were performed by this facility . . . . . _____ % /109-111

b. Documentation of waste characteristics was provided by the off-site source . . . . . 100 % /112-114

c. Documentation of waste characteristics was taken from data on similar wastes . . . . . _____ % /115-117

d. Other [SPECIFY]: _____ _____ % /118-120

_____ /121-122

II. GROUNDWATER MONITORING

|16|

25. Please indicate whether this facility has ever used or currently uses any of the following methods to prevent contamination of the aquifers or groundwater. For each method used, indicate the year and cost of installation. [CIRCLE ONE CODE FOR EACH METHOD, AND ENTER YEAR AND COST WHERE APPLICABLE]

	Yes	No	Year started	Cost	
a. Slurry wall	1	(2)		$	/16-29
b. Counterpumping.	(1)	2	1971	$ 500,000	/30-43
c. Other [SPECIFY]:	1	(2)		$	/44-57
					/58-59

26. Does this facility have groundwater monitoring wells? [CIRCLE ONLY ONE CODE]

Yes [GO ON TO QUESTION 27] . . . . . (1) /60

No [SKIP TO QUESTION 29]. 2

27. How many hydraulically upgradient, and how many hydraulically downgradient wells for groundwater monitoring does this facility have?

a. NUMBER OF UPGRADIENT WELLS. . . . . 2 /61-62

b. NUMBER OF DOWNGRADIENT WELLS. . . . . 8 /63-64

28. Please describe up to six of this facility's groundwater monitoring wells, giving the specifications for at least one hydraulically upgradient well, and at least three hydraulically downgradient wells which are used to comply with the groundwater monitoring standards.

	Well 1	Well 2	Well 3	Well 4	Well 5	Well 6	
a. Is this an upgradient or downgradient well? [CIRCLE ONLY ONE CODE]							
Upgradient	(1)	1	1	1	1	1	/65-70
Downgradient	2	(2)	(2)	(2)	(2)	(2)	
b. What is the depth of this well in feet?							
DEPTH.	20 (FEET)	22 (FEET)	22 (FEET)	20 (FEET)	20 (FEET)	20 (FEET)	/71-94
c. What was the approximate cost of installing this well? [INCLUDE LABOR, MATERIALS AND FEES]							|17|
INSTALLATION COST.	$1500	$1500	$1500	$2000	$2000	$2000	/16-69
d. In what year was this well installed?							
YEAR INSTALLED . . .	1981 (YEAR)	1978 (YEAR)	1978 (YEAR)	1981 (YEAR)	1981 (YEAR)	1981 (YEAR)	/70-93
e. How frequently are samples from this well drawn and analyzed? [ENTER FREQUENCY AND CIRCLE TIME UNIT CODE]							
FREQUENCY:							/94-111
[CIRCLE ONE]:							
Per month.	01	01	01	01	01	01	
Per year	02	02	02	02	02	02	
Other [SPECIFY]: . QUARTERLY	(03)	(03)	(03)	(03)	(03)	(03)	/112-123

29. Are there any geologic/hydrogeologic studies of this facility? [CIRCLE ONLY ONE CODE]

Yes . . . . . (1) /124

No. 2

III. SITE GEOGRAPHY

30. Is this facility located within one mile of a fault that has had displacement within the past 10,000 years (Holocene time)? [CIRCLE ONLY ONE CODE]

Yes [GO ON TO QUESTION 31]. . . . . 1 /125

No [SKIP TO QUESTION 37] . . . . . (2)

Don't know [SKIP TO QUESTION 37]. 8

31. How close is this facility to the fault?

DISTANCE FROM FAULT: _____ feet /126-

32. Has this facility experienced any seismic ground motion activity (e.g., subsidence, shaking, displacement) since its construction? [CIRCLE ONLY ONE CODE] |18|

Yes [GO ON TO QUESTION 33]. 1

No [SKIP TO QUESTION 37] . . . . . 2 /16

Don't know [SKIP TO QUESTION 37]. 8

33. What type of seismic ground motion has this facility experienced? [CIRCLE ONE CODE FOR EACH ITEM]

	Yes	No	
a. Ground failure (liquifaction or slope stability).	1	2	/17
b. Earthquakes (shaking).	1	2	/18
c. Fault displacement	1	2	/19
d. Ground subsidence.	1	2	/20
e. Other [SPECIFY]: _____	1	2	/21
_____			/22-23

34. What was the intensity of the most severe seismic event experienced by this facility as measured by the Richter Magnitude Scale? [CIRCLE ONLY ONE CODE]

Less than 2 on the Richter scale. 01

From 2 up to 4 on the Richter scale 02

From 4 up to 6 on the Richter scale 03

From 6 up to 8 on the Richter scale 04

8 or greater on the Richter scale 05

Don't know. . . . . 98 /24-25

35. Did any seismic ground motion event ever damage any portion of this facility? [CIRCLE ONLY ONE CODE]

Yes . . . . . 1 /26

No. 2

36. Has this facility incorporated any of the following design or locational criteria to mitigate the severity of ground motion induced damages? [CIRCLE ONE CODE FOR EACH ITEM]

	Yes	No	
a. Structural reinforcement	1	2	/2
b. Site analysis (geologic)	1	2	/2
c. Construction materials	1	2	/2
d. Structural design magnitude.	1	2	/3
e. Other [SPECIFY]: _____	1	2	/3
_____			/3

37. Is this facility, or a portion of this facility, located in a floodplain? [CIRCLE ONLY ONE CODE]

Yes [GO ON TO QUESTION 38]. . . . . (1)

No [SKIP TO QUESTION 40] . . . . . 2 /3

Don't know [SKIP TO QUESTION 40]. 8

38. Which of the following best describes the floodplain on which this facility is located? [CIRCLE ONLY ONE CODE]

Riverine. 01

Coastal . . . . . (02)

Other [SPECIFY]: _____ 03

_____ /35

39. Which of the following best describes the frequency of flooding of the floodplain on which this facility is located? [CIRCLE ONLY ONE CODE]

Floods annually 01

Ten year floodplain 02

Fifty year floodplain . . . . . (03)

One hundred year floodplain 04

Five hundred year floodplain. 05

Other [SPECIFY]: _____ 06

_____ /37

40. Has this facility ever been flooded? [CIRCLE ONLY ONE CODE]

Yes [GO ON TO QUESTION 41] . . . . . (1) /39

No [SKIP TO QUESTION 43]. 2

41. What was the magnitude of the most severe flood experienced by this facility? [CIRCLE ONLY ONE CODE]

A 50 year flood	(01)	
A 100 year flood.	02	
A 500 year flood.	03	
Other [SPECIFY]: _____	04	
_____		
Don't know.	98	/40-41

42. Has hazardous waste ever been released from this facility as a result of a flood? [CIRCLE ONLY ONE CODE]

Yes	1	
No.	(2)	/42
Don't know.	8	

43. What types of flood protection does this facility currently have in place? [CIRCLE ONE CODE FOR EACH TYPE OF PROTECTION]

IF THIS FACILITY DOES NOT CURRENTLY HAVE FLOOD PROTECTION, CHECK HERE ☐ AND SKIP TO QUESTION 45. /43

	Yes	No	
a. Levee.	1	(2)	/44
b. Elevation.	1	(2)	/45
c. Structural reinforcement	1	(2)	/46
d. Warning system (waste removal prior to flood).	1	(2)	/47
e. Other [SPECIFY]: SEA WALL	(1)	2	/48
_____			/49-50

44. Why was the flood protection instituted at this installation? [CIRCLE ONE CODE FOR EACH REASON]

	Yes	No	
a. RCRA	1	②	/51
b. Local regulation	1	②	/52
c. State regulation	1	②	/53
d. Insurance requirements	1	②	/54
e. Self-protection.	①	2	/55
f. Other [SPECIFY]: _____	1	2	/56
_____			/57-5

The following questions relate to the quantity of waste which is recycled rather than discarded. This would include wastes which are used or reused, as for raw materials in production processes; or recycled or reclaimed, such as solvent redistillation, scrap metal reclaimed by secondary smelter, or wastes which are blended to make fuels. Beneficial use also includes "wastes used in a manner constituting disposal" such as waste applied directly to the land as dust suppressants or as fertilizers.

45. Did this facility generate or receive any hazardous waste that was used, reused, recycled, or reclaimed (either on site or off site) before 1981? [CIRCLE ONLY ONE CODE]

Yes . . . . . ① /59
No. 2

46. Will any hazardous waste generated or received by this facility be used, reused, recycled, or reclaimed (either on site or off site) after 1981? [CIRCLE ONLY ONE CODE]

Yes . . . . . ① /60
No. 2

47. Did this facility generate or receive hazardous wastes that were used, reused, recycled, or reclaimed (either on site or off site) during 1981? [CIRCLE ONLY ONE CODE]

Yes [GO ON TO QUESTION 48] . . . . . ① /61
No [SKIP TO QUESTION 52]. 2

48. In the table below, please specify the total quantity of hazardous waste generated or received at this facility that was used, reused, recycled or reclaimed (either on site or off site) during 1981. Of this total, indicate the quantity that was recycled on site at this facility during 1981; the quantity that was shipped off site during 1981 for recycling at a facility owned by this firm; and the quantity that was shipped off site during 1981 for recycling at a facility owned by another firm. [ENTER QUANTITIES AND CIRCLE UNIT CODE. PLEASE USE THE SAME UNIT OF MEASURE THROUGHOUT THE TABLE]

	QUANTITY	
a. Total quantity generated or received that was used, reused, recycled, or reclaimed during 1981 [THE TOTAL QUANTITY REPORTED ON THIS LINE SHOULD EQUAL THE SUM OF THE QUANTITIES ON LINES b, c, AND d BELOW].	484	/62-70
b. Quantity recycled on site during 1981	0	/71-79
c. Quantity shipped off site during 1981 for recycling at a facility owned by this firm	0	/80-88
d. Quantity shipped off site during 1981 for recycling at a facility owned by another firm.	484	/89-97

[CIRCLE ONE]:

Metric tonnes. 01

English (or short) tons. . . . . (02)

Gallons. 03

Other [SPECIFY]: _____ 04

/98-99

49. Please complete the following table for the five principal hazardous wastes generated or received by this facility which were shipped off site in greatest volume for use, reuse, recycling or reclamation during the 1981 calendar year. [REFER TO FACING PAGE FOR INSTRUCTIONS FOR COMPLETING EACH COLUMN OF THE TABLE]

IF THIS FACILITY DID NOT SHIP ANY HAZARDOUS WASTES OFF SITE TO BE USED, REUSED, RECYCLED OR RECLAIMED DURING 1981, CHECK HERE ☐ AND SKIP TO QUESTION 50.

COLUMN A EPA Number AND description of waste shipped off site for use, reuse, recycling, or reclamation	COLUMN B EPA Identification Numbers of three facilities to which waste was sent in greatest volume for use, reuse recycling, or reclamation	COLUMN C Quantity of waste shipped to each facility during 1981*
a. K016191 0008 Description: EMISSION CONTROL DUST FROM SECONDARY LEAD SMELTING	SEENOTE	484
b. Description:		
c. Description:		
d. Description:		
e. Description:		

NOTE - LEAD DUST IS SENT TO
OHGITANI KOGYO COMPANY-LTD
SUMITOMO, NAKAN OSHIMA BLDG. 3-2-18
NAKANOSHIMA, KITA-KU OSAKA 530 JAPAN

*[CIRCLE ONE]:

Metric tonnes. 01

English (or short) tons. 02

Gallons. 03

Other [SPECIFY]: _____ 04

COLUMN A: ENTER THE EPA WASTE NUMBERS AND SHORT DESCRIPTIONS OF THE FIVE WASTES, INCLUDING DESCRIPTIONS OF THE PROCESSES THROUGH WHICH EACH WASTE WAS GENERATED. [EPA WASTE CODES ARE LISTED IN APPENDIX A OF THE GENERAL INSTRUCTIONS]

COLUMN B: ENTER THE EPA IDENTIFICATION NUMBERS OF THE THREE FACILITIES TO WHICH EACH WASTE WAS SHIPPED IN GREATEST VOLUME.

COLUMN C: INDICATE THE QUANTITY OF WASTE SHIPPED TO EACH FACILITY AND CIRCLE THE UNIT CODE AT THE BOTTOM OF THE COLUMN. PLEASE USE THE SAME UNIT OF MEASURE FOR ALL WASTES IN THE TABLE.

COLUMN D: CIRCLE THE CODE OR CODES THAT INDICATE HOW EACH WASTE WAS STORED PRIOR TO SHIPMENT OFF SITE FOR USE, REUSE, RECYCLING, OR RECLAMATION.

COLUMN E: FOR EACH FACILITY, INDICATE THE AVERAGE NUMBER OF DAYS EACH WASTE WAS STORED PRIOR TO SHIPMENT OFF SITE FOR USE, REUSE, RECYCLING, OR RECLAMATION. |19R|

COLUMN D How was waste stored prior to shipment off site for use, reuse, recycling, or reclamation? [CIRCLE ALL THAT APPLY FOR EACH FACILITY]						COLUMN E Average number of days waste was stored prior to shipment off site for use, reuse, recycling, or reclamation.
In containers	In above ground tanks	In below ground tanks	In piles	In surface impoundments	Other [SPECIFY]:	
(01)	02	03	04	05	06 _____	45 Days
01	02	03	04	05	06 _____	_____ Days
01	02	03	04	05	06 _____	_____ Days
01	02	03	04	05	06 _____	_____ Days
01	02	03	04	05	06 _____	_____ Days
01	02	03	04	05	06 _____	_____ Days
01	02	03	04	05	06 _____	_____ Days
01	02	03	04	05	06 _____	_____ Days
01	02	03	04	05	06 _____	_____ Days
01	02	03	04	05	06 _____	_____ Days
01	02	03	04	05	06 _____	_____ Days
01	02	03	04	05	06 _____	_____ Days
01	02	03	04	05	06 _____	_____ Days
01	02	03	04	05	06 _____	_____ Days
01	02	03	04	05	06 _____	_____ Days

50. Please complete the following table for the five principal hazardous wastes which this facility used, reused, recycled, or reclaimed, on site in greatest volume during the 1981 calendar year. [REFER TO FACING PAGE FOR INSTRUCTIONS FOR COMPLETING EACH COLUMN OF THE TABLE]

IF THIS FACILITY DID NOT USE, REUSE, RECYCLE, OR RECLAIM ANY HAZARDOUS WASTES ON SITE IN 1981, CHECK HERE ☑ AND SKIP TO QUESTION 52. /1

/1

COLUMN A EPA Number AND description of waste used, reused, recycled or reclaimed on site	COLUMN B How was this waste used, reused, recycled or reclaimed? [CIRCLE ALL THAT APPLY]					COLUMN C Quantity of waste used, reused, recycled or reclaimed during 1981*
	As feed-stock in manufac-turing process	As fuel or fuel supple-ment	In manner consti-tuting disposal	Reclaimed	Other [SPECIFY]:	
a. |__|__|__|__| Description: _____	01	02	03	04	05 _____	_____
b. |__|__|__|__| Description: _____	01	02	03	04	05 _____	_____
c. |__|__|__|__| Description: _____	01	02	03	04	05 _____	_____
d. |__|__|__|__| Description: _____	01	02	03	04	05 _____	_____
e. |__|__|__|__| Description: _____	01	02	03	04	05 _____	_____

*[CIRCLE ONE]:

Metric tonnes 01

English (or short) tons 02

Gallons 03

Other [SPECIFY]: _____ 04

COLUMN A: ENTER THE EPA WASTE NUMBERS AND SHORT DESCRIPTIONS OF THE FIVE WASTES, INCLUDING THE NAMES OF THE WASTES AND DESCRIPTIONS OF THE PROCESSES THROUGH WHICH EACH WASTE WAS GENERATED. [EPA WASTE CODES ARE LISTED IN APPENDIX A OF THE GENERAL INSTRUCTIONS]

COLUMN B: CIRCLE THE CODE OR CODES THAT DESCRIBE HOW THIS WASTE WAS USED, REUSED, RECYCLED OR RECLAIMED DURING 1981.

COLUMN C: INDICATE THE AVERAGE QUANTITY OF WASTE USED, REUSED, RECYCLED OR RECLAIMED DURING 1981 AND CIRCLE THE UNIT CODE AT THE BOTTOM OF THE TABLE. PLEASE USE THE SAME UNIT OF MEASURE FOR ALL WASTES IN THE TABLE.

COLUMN D: CIRCLE THE CODE OR CODES THAT INDICATE HOW EACH WASTE WAS STORED PRIOR TO USE, REUSE, RECYCLING, OR RECLAMATION.

COLUMN E: FOR EACH FACILITY, INDICATE THE AVERAGE NUMBER OF DAYS EACH WASTE WAS STORED PRIOR TO USE, REUSE, RECYCLING, OR RECLAMATION.

|20R|

COLUMN D How was waste stored prior to use, reuse, recycling, or reclamation? [CIRCLE ALL THAT APPLY]						COLUMN E Average number of days waste was stored prior to use, reuse, recycling, or reclamation.
In containers	In above ground tanks	In below ground tanks	In piles	In surface impoundments	Other [SPECIFY]:	
01	02	03	04	05	06 _____	_____ Days
01	02	03	04	05	06 _____	_____ Days
01	02	03	04	05	06 _____	_____ Days
01	02	03	04	05	06 _____	_____ Days
01	02	03	04	05	06 _____	_____ Days

51. For each waste indicated in Question 50 as being used in a manner constituting disposal ("03" circled in Column B), please describe the specific manner in which the waste was used. |21|

_____

_____

_____

_____

_____

_____ /16-17

X. FINANCIAL ASSURANCE

52. How will closure and/or post closure costs be covered for this facility? [CIRCLE ONE CODE FOR EACH COVERAGE METHOD]

COVERAGE BY:	Closure costs only	Post-closure costs only	Both closure and post-closure	Neither closure nor post-closure	
a. Trust fund.	1	2	3	4	/18
b. Surety bond	1	2	3	4	/19
c. Letter of credit.	1	2	(3)	4	/20
d. Financial test.	1	2	3	4	/21
e. Insurance policy.	1	2	3	4	/22
f. Corporate guarantee	1	2	3	4	/23
g. State guarantee	1	2	3	4	/24
h. Federal or state exemption.	1	2	3	4	/25
i. Other [SPECIFY]: _____	1	2	3	4	/26
_____					/27-28

53. What are the annual administrative charges for maintaining the financial assurance mechanisms listed in Question 52?

	Dollars per year	
a. Closure.	$ 9500	/29-37
b. Post-closure	$ 700	/38-46
c. TOTAL ADMINISTRATIVE COSTS. . .	$ 1200	/47-55

54. Did this facility or the company that owns this facility put up collateral for financial assurance coverage? [CIRCLE ONLY ONE CODE]

Yes [GO ON TO QUESTION 55] . . . . . 1 /56
No [SKIP TO QUESTION 56]. . . . . (2)

55. What is the value of the collateral?

VALUE OF COLLATERAL: $ _____ /57-65

56. Does this facility have liability insurance for third party damages (i.e., bodily injury and property damage) resulting from sudden or nonsudden releases of hazardous waste? [CIRCLE ONLY ONE CODE]

Yes [GO ON TO QUESTION 57] . . . . . (1)
No [PLEASE SIGN THE CERTIFICATION STATEMENT ON PAGE 37 AND RETURN THIS FORM TO EPA]. . . . . 2 /66

57. In what year did this facility obtain liability insurance for third party damages? [IF MORE THAN ONE POLICY HAS BEEN WRITTEN FOR THIS FACILITY, PLEASE GIVE THE YEAR THE MOST RECENT POLICY WAS OBTAINED]

YEAR LIABILITY INSURANCE OBTAINED: 1982 /67-75

58. In order to obtain liability insurance, was it necessary to upgrade this facility, modify current practices at this facility, or have a risk assessment of this facility performed? [CIRCLE ONE CODE FOR EACH ITEM]

	Yes	No	
a. Upgrade facility.	1	(2)	/76
b. Modify current practices.	1	(2)	/77
c. Obtain risk assessment.	1	(2)	/78

59. How many facilities, INCLUDING this facility, does the liability insurance cover?

NUMBER OF FACILITIES COVERED: 82 /79-81

60. In the table below, please indicate the number of policies held, the amount of coverage, the annual cost of the policy, and the amount of the deductible for the liability insurance. [IF MORE THAN ONE POLICY IS HELD, INDICATE THE TOTAL COVERAGE, THE TOTAL COST, AND THE AVERAGE DEDUCTIBLE FOR ALL POLICIES IN EACH CATEGORY OF THE TABLE BELOW]

IF MORE THAN ONE FACILITY IS COVERED BY THE POLICY, CHECK HERE [✓] AND ENTER THE AMOUNT OF COVERAGE, COST AND DEDUCTIBLE FOR ALL FACILITIES COVERED. /82

|22|

Type of Policy	Number of Policies	Amount of Coverage	Annual Cost of Policy	Amount of of Deductible	
a. Sudden		4,000,000/OCCUR 8,000,000/ AGGREGATE	NONSEPERABLE COMPOSITE RATED PREMIUM	NONE	/16-4
b. Nonsudden		SAME AS ABOVE	SAME AS ABOVE	NONE	/45-7
c. Combined policy	(SEE NOTE) ONE				/74-1

61. Does the policy cover accidents resulting from sudden or nonsudden releases of hazardous waste which may have occurred prior to the year in which the policy was obtained? [CIRCLE ONLY ONE CODE]

Yes [GO ON TO QUESTION 62]. . . . . 1 /103
No [SKIP TO QUESTION 63] . . . . . (2)

62. For how many years prior to the year the policy was obtained is accident liability insurance provided?

NUMBER OF YEARS PRIOR COVERAGE: _____ /104-

63. Does the policy cover legal defense costs? [CIRCLE ONLY ONE CODE]

Yes. . . . . 1 /106
No . . . . . (2)

NOTE - A LETTER OF CREDIT HAS BEEN SENT TO NEW JERSEY TO COVER ALL DUPONT FACILITIES IN THE STATE

PLEASE SIGN THE CERTIFICATION STATEMENT ON PAGE 37 AND RETURN THIS FORM TO EPA IN THE ENVELOPE PROVIDED.

CERTIFICATION STATEMENT

THE OWNER OR THE OPERATOR OF THE FACILITY, OR HIS AUTHORIZED REPRESENTATIVE, MUST SIGN AND DATE THE CERTIFICATION WHERE INDICATED. THE PRINTED OR TYPED NAME OF THE PERSON SIGNING THE CERTIFICATION MUST ALSO BE INCLUDED WHERE INDICATED.

CERTIFICATION:

I certify under penalty of law that I have personally examined and am familiar with the information submitted in this and all attached documents, and that based on my inquiry of those individuals immediately responsible for obtaining the information, I believe that the submitted information is true, accurate, and complete. I am aware that there are significant penalties for submitting false information, including the possibility of fine and imprisonment.

PRINT OR TYPE NAME	SIGNATURE	DATE SIGNED

AFTER COMPLETING THIS QUESTIONNAIRE, RETURN IT TO EPA IN THE ENVELOPE ENCLOSED IN THE QUESTIONNAIRE PACKAGE.

IF THIS FACILITY HAS RECEIVED MORE THAN ONE QUESTIONNAIRE, PLEASE RETURN ALL COMPLETED QUESTIONNAIRES IN THE SAME ENVELOPE.

Attachment 3

DuPont Response of May 30, 2012 to Raritan Bay Information Request

4203000

B. F. Galloway, Petchem Office
R. Moore/D. J. Toton, Petchem Office
A. Pagano, Admin. Building
T. H. Spencer, Admin. Building
B. H. Wright, Petchem Office

August 10, 1982

TO: ~~G.~~ H. Cassedy, Administration Building

FROM: R. N. Watson, Petchem Technical Laboratory RNW

ARTHUR D. LITTLE/RCRA SURVEY

Attached are responses to the questions and sampling plan submitted by A. A. Balasco in his May 26 and June 18 letters to you. Please review these responses and transmit them to the Arthur D. Little Company in the appropriate format.

Please note the following comments:

- We are submitting corrections to the process diagrams and correcting other inaccuracies.
- We suggest that A. D. Little contact the manufacturers of raw materials for complete identification of impurities. MSDS sheets (front page only) are included to assist them in contacting other manufacturers.
- We suggest that A. D. Little personnel be reminded that the lead compounds present in process streams are as hazardous or more hazardous than minor raw material impurities or by-products.
- It is also appropriate to note again that the continuous TEL unit is now "one-of-a-kind" and process streams will not be indicative of any "general" manufacturing processes.

RNW:bw
Attachments

Corrections to Process Flow Diagrams

Figure 1 - Continuous Tetraethyllead Production Unit

1. Recycled lead from the lead recovery furnaces is not fed into the continuous process.

2. Materials fed to the stripper should be referred to as "antiagglomerating" agents, not stripping agents.

3. Vent gases (stream G-1) are burned as a fuel, however, the reference to an incinerator is inaccurate.

4. The washer in the continuous process is not a pit.

5. There is no lead grinding step.

6. Recovered lead melting is done in a melt pot, not a furnace.

7. There is no baghouse connected to the recovery melt pot, nor is there slag generated.

8. Process streams designated A-1 and A-3 are combined in the production building.

9. Process streams S-1 and S-2 do not exist.

Figure II - Batch TEL Production Unit

1. Recycled lead from the lead recovery unit is not fed normally to alloy manufacture as a separate stream.

2. The vent from the ethyl chloride purification is burned as a fuel, but no incinerator is employed.

3. The stripper block is actually a steam distillation operation. Anti-agglomerating agents rather than stripping agents are introduced here.

4. No sodium hydroxide or reducing agents are introduced into lead furnaces.

5. The diagrammed caustic storage and process stream A-8 should be deleted.

Figure III - Batch TML Production Unit

1. Items 1-5 of Figure II apply to this diagram also.

2. Inorganic aluminum compounds are added as catalyst. They are not added as organic aluminum compounds.

3. Process stream A-12 should be deleted.

Figure IV - TMEL Production Unit

Figure V - Lead Recovery Unit

1. The centrifuge which takes material from the settling basin recycles water to the Accelator.

2. There is no lead recycled from the spray furnace.

Responses to Questions (May 26, 1982 Letter)

- Production Volume 1979 to 1981

	TEL	M̄ lb. TML	Redistribution
Ch. Wks.	265	52.5	131
Antioch	144	0	54

- Design Production Capacity

  Continuous TEL manufacture - 96 M̄ lb.
  Batch TEL manufacture - 38 M̄ lb.
  Batch TML manufacture - 28.5 M̄ lb.
  Redistribution manufacture - 95 M̄ lb.

- Design Production Capacity of the Anitoch, California tetraethyl lead production facility:

  This facility is no longer in operation.

- Typical total batch time: 2-3 hours.

- Compositions of Raw Materials:

  Known compositions are given here. Also manufacturers' MSDS sheets (identification page only) are attached. If more detailed information is required, the manufacturer should be contacted. All percents are weight %.

  Acetone - The material should be approximately 99.5% pure.

  "Acintol" FA-1 - The manufacturer has supplied the following typical properties:

  Moisture - 0.1%
  Polyunsaturated acids - 44%
  Oleic acid - 52%
  Saturated acids - 4%

Aluminum Chloride - Indirect purity measured by heat of solution (minimum 580 cal/gm), <.1% insoluble in water, <.1% iron compounds.

Ammonia - Minimum purity should be 99.7%.

Antioxidant #30 - This is >97% 2,4 dimethyl-6-tertiary butyl phenol.

Antioxidant #31 - This is a mixture of alkylated phenols, predominantly 2,4-dimethyl-6-tertiary butyl phenol.

Boron Trifluroide Ethyl Ether Complex - The supplier describes the product as the following: 48.2% Boron trifluoride equivalent, Nil free ether, 0.4% free Boron trifluoride , .05% water.

Dyes - The dyes used are typically anthraquinone or azo dyes in a hydrocarbon solvent (typically xylene).

Blue: 1,4 di(isopropyl amino) anthraquinone
Orange: Phenol-azo-2-naphthol
Red: Methyl derivatives of azobenzene-4-azo-2-naphthol
Yellow: Para-diethylamino-azobenzene

Ethyl Chloride - This material is typically >99.5% pure, >.003% residue, alcohols + water <0.04%, acidity <.002%, ethyl ether <.5%, <.001% SO_2.

Ethylene Dibromide - This material is typically >99.5% pure.

Ethylene Dichloride - This material is typically >98.6% pure.

Ferric Sulfate - This material is typically 89.0% pure with 2.7% free sulfuric acid.

Ferrous Sulfate - Typical analyses are >90% $FeSO_4$ $7H_2O$, <1% water insoluble impurities, <1.0% ferric ion, 1-2% water and traces of free sulfuric acid.

Glycerin - This material typically contains <.5% water, <.5% volatile materials, >84% carbon.

Hydrogen Chloride Gas - The typical purity is >99.9%.

Kerosene - This material is a petroleum distillate. The sulfur is <.1%, and there should be Nil butyl mercaptan.

Lead - The material is typically 99.85% pure. Arsenic and antimony are <.02% combined.

Methyl Chloride - This material is typically 99.3% pure. The residue on evaporation is <0.01%. The acidity (as HCl) is <.005%, moisture is <0.015%.

Sodium - Sodium should have a total alkalinity >99.0%. Typically the material is 99.9% pure. Chlorides should be <0.1%. There should be no evidence of sulfates or heavy metals. Calcium content should be <0.04%.

Sodium Dichromate - The minimum purity is 98.5%. The maximum content of water insoluble impurities is 0.1%.

Sodium Hydroxide (50%) - This material is >48.0% NaOH. It contains <.3% sodium carbonate, <1.0% sodium chloride, and <10 ppm iron.

Sodium Sulfide - Purchased as 60% flake. Typical analyses are given by the manufacturer as 61% Na_2S + NaHS, 3% NaHS, 36% water, 1.4% thiosulfate, 1.0% carbonate, 0.6% polysulfide sulfur, 15 ppm iron.

Sodium Thiosulfate - The manufacturer has supplied the following typical analyses: sodium thiosulfate 97.6%, sulfates 1.6%, chlorides .14%, carbonates 0.04%, iron 5 ppm, arsenic 0.1 ppm.

Solvenol #2 - This is a complex mixture of terpenes.

Sulfur - Sulfur should contain only sulfur and a dispensing agent (Daxed No. 11). The ash content should be <.25% and carbon tetrachloride insolubles <.75%.

Toluene - The product conforms with ASTM designation D-841-50. The maximum thiophene equivalent is <0.7 ppm. There should be no free acid, H_2S or SO_2. It should have <1.5% paraffin hydrocarbons.

- Identification of "soaps" employed in the various batch stripping operations:

  TEL, "Acintol" FA-1, TML-none used.

- Identification of solvents and/or detergents employed in equipment cleaning:

  The only equipment cleaning agents are water and sodium sulfide in water.

- Identification of compounds in the "petroleum" protective layer employed in sodium transport/storage:

  There is no "petroleum" protective layer used in our sodium operations.

- Annual Generation rates:

A-1 to A-2:	340 $\bar{M}$ lb/yr
A-3:	800 $\bar{M}$ lb/yr
A-4:	60 $\bar{M}$ lb/yr
A-5 to A-7:	The combined rates of A-5 to A-7 would be 240 $\bar{M}$ yr.
A-8:	There is no such process stream.
A-9 to A-11:	90 $\bar{M}$ lb/yr (Combined)
A-12:	There is no such process stream.
A-13:	7$\bar{M}$ lb/yr
A-14:	5×10^9 lb/yr

- Annual Generation rate of flue dust:

  All sources: 1.1 $\bar{M}$/lb
  (S-1, S-3, S-5, S-7)

- Available analytical data:

  A-1 and A-3: Solids .002% (inorganic lead .0006-.002%)
  NaCl 0.1 - 0.2%
  pH - 9.5

A-2: .4% solids (Inorganic and organic lead .1-.7%)
NaOH - 0.1-0.3%
NaCl - 7-9%
pH - 11.5

A-4: NaOH - 1-2%
NaCl - .4-.6%
Inorganic lead - .05%
Na_2CO_3 - .3%
Solids - .2%

A-5 to A-7: These streams have not been characterized as diagrammed.

A-9 to A-11: These streams have not been characterized as diagrammed.

A-13: 0-.5% Triethyl and Trimethyl lead halides
0.0-0.6% DOC
pH - 8-10
NaOH - .1-.3%

A-14: Solids - 0-.007%
Total lead - .0004-.0008%
Dissolved lead - .0002-.0004%
DOC - .002-.005%
pH - 8-9.5

Comments on Sampling and Analysis Plan

Ref: Letter Armand A. Balasco to G. H. Cassedy, June 18, 1982.

- The same corrections listed earlier on the flow diagrams apply to the diagrams of this letter also.

  The following comments are referenced to the page number of Balasco's June 18 letter.

  - Pg. 3 - TEL and TML yields range from 85-90% based on sodium not organic feedstocks.

    Not all of the TEL and TML production is redistributed.

    The redistribution of alkyl groups in the Tetramix® reaction is not a disproportination reaction.

  - Pg. 4 - Product formulations may contain 1,2 dichloroethane and/or 1,2-dibromoethane.

    References to eight reaction units is confidential and immaterial to the waste generation study (all are identical). We request that these statements be deleted in further documents.

    Similarly, the reference to the status of the batch TEL production status for 1982 is confidential, subject to change, and not pertinent to the waste generation study.

  - Pg. 5 - Only sodium dichromate is used as an anti-agglomerating agent in the continuous TEL stripping process.

    Washing pits are not used in the continuous process. Solid slurry from the stripper is directed to a washer. The aqueous effluent overflows to the lead recovery system and the solids pass directly into hydraulic press. The pressed material (predominantly lead) is conveyed to a melt pot covered with molten sodium hydroxide where it is melted for recycle. There is no slag or flue dust recovery in the continuous TEL operation.

  - Pg. 6 - Soft water is not used in these processes. The water used is termed process water which is treated and filter river water.

- Pg. 6 (Continued) - Vent gases from the ethyl chloride recovery system in the continuous TEL process are used as auxiliary fuel in the furnaces. The gases are not directed to an incinerator.

  Impurities removed by distillation of ethyl chloride in the batch TEL process are not currently incinerated.

  Batch TEL is separated from solid by-products in a steam still (not stripper). In this process anti-agglomerating agents used are sulfur, sodium thio-sulfate and Acintol FA-1.

  The lead containing solids in the batch TEL process are not handled identically to those in the continuous process. The solids in the batch stills are dropped to water pits from which solids are dredged out, moderately dried, briquetted, and melted in a lead recovery furnace for recycle.

- Pg. 8 - The tetraethyl lead products from primary manufacturing units are blended with stabilizing agents (EDC or EDB) and stored or shipped. Some of this storage material is further blended for sales products and some is used in the redistribution process.

  Organic aluminum compounds are not added to the reactor vessel. An inorganic aluminum compound is used in the TML batch reaction as catalyst.

  Materials vented from the methyl chloride purification columns are burned as auxiliary fuel, not incinerated.

  TML is separated from the reaction mixture by steam distillation. There are no soaps employed in this operation.

- Pg. 11 - The redistribution reaction is a continuous process.

  Aqueous effluents from centrifugation are all recycled back to the accelator.

  Lead is recovered from the spray furnaces as slag and dust. There is no significant molten lead recovered for recycle back to the production processes.

Comments on Sampling Plan

- Pg. 15 - Please delete further references to non-operation of batch TEL.

  We can not guarantee that the units involved, continuous TEL, batch TML and TMEL, will all be operating at the desired time and sampling.

  Flue dusts from the TML furnaces and spray furnaces are not strictly segregated. There is no flue dust generated directly from the continuous TEL operation.

  It is much easier to take a combined TML process water stream sample than to sample individual still contents.

  Samples could be sent via U.P.S. "signature service".

Table I Comments

- We do not regard any of the process streams indicated (except for A-14) as "waste" streams. This should be so noted in your documentation.

- Samples A-2 and A-3 should show identical components although perhaps slightly different concentrations may be seen. The A-3 sample will yield no additional information.

- There are no S-1, A-12, and B-2 process streams.

- Sample A-11 will be composed at various recycle streams as well as the primary TML process stream.

Table II Comments

- See previous comments about the existence of the process streams indicated in this table.

- The volume of samples indicated is large. Will Du Pont supply transportation and handling for all these samples? Will they be prepared, iced down and packaged as they are taken.

Figure VI Comments

- We prefer that samples from each location be taken at one time. This is because operations personnel are required to do the actual sampling and it will be less time consuming to do each location completely once sampling has started.

Pg. 20,25 Comments

- For complete preservation of organic lead compounds as inorganic lead species, bromine or ICL in nitric acid should be used.

- Is there any definition of "major species of interest to the EPA"?

Table III Comments

- We would not expect to find any sodium/lead alloy, elemental bismuth, ethyl lead trichloride, sodium thiosulfate, sodium triethyl lead or ferrous/ferric salts in process stream designated A-2.

- We would not expect to find sodium/lead alloy, elemental bismuth, methyl lead trichloride, sodium trimethyl lead.

Pg. 27, 28, 29 (Field Safety Plan) Comments

- DuPont safety practices and procedures will be followed if A. D. Little personnel are present at the sampling sites.

- Women of child-bearing potential will be required to wear respiratory protective devices at some of the sampling sites.

- All samples taken must be handled as toxic materials and precautions must be taken during all phases of the analysis program to prevent personnel exposure.

RNW:bw

/1

Attachment 4

DuPont Response of May 30, 2012 to Raritan Bay Information Request

CC: G.H. Cassedy

DON'T SAY IT . . . Write it

4203000

TO Rich Watson LOCATION Pet Chem Dev. Lab (C)

FROM A. Pagano LOCATION Adm Bldg (C) PHONE NO. 4106

SUBJECT A.D. Little, Organometallic Study DATE 6/1/82

As per our phone conversation, attached find:

- Copy of A.D. Little letter in which they request certain information discussed at the May 6 1982 meeting
- Copies of their process flow diagrams for each process.

As discussed, all of the information requested presumably will be generated by the lead area.

Please review the letter and diagrams to determine if:

- The info they request is the same as that requested at the meeting
- The diagrams they supply are the same as we supplied them. i.e. that there are no surprises.

Called 6/8/82 - R. Watson expects to work on week of 6/14

MAY 26 1982 letter

received 6/1/82
AM

FCD 4203000

Arthur D. Little, Inc. ACORN PARK · CAMBRIDGE, MA 02140 · (617) 864-5770 · TELEX 921436

May 26, 1982

Mr. George H. Cassedy
Chambers Works
E.I. du Pont de Nemours & Co., Inc.
Route 130
Deepwater, New Jersey 08023

Dear Mr. Cassedy:

On behalf of Arthur D. Little, Inc., I wish to thank you and your colleagues for providing us with information regarding the manufacture of tetraalkyllead compounds at the Deepwater, New Jersey plant of E.I. du Pont de Nemours & Company. We found the meeting of May 6, 1982, to be both interesting and informative.

During the course of our meeting several questions arose regarding the availability of various items of information that were of interest to us. At that time, you suggested that we summarize, in writing, the information we desire and forward it to you. Per your request, please find below a listing of the information items which we require:

- Design production capacities for each of the four production units at this plant [i.e., the continuous tetraethyllead production unit, the batch tetraethyllead production unit (includes eight trains), the batch tetramethyllead production unit (includes eight trains), and the redistribution mixture production unit];

- Design production capacity of the Antioch, California tetraethyllead production facility;

- Annual production volumes for at least three of the most recent years for tetraethyllead, tetramethyllead, and the redistribution mixtures (for this plant alone and the total for both du Pont plants);

- Typical total batch times;

- Compositions of raw materials and additives including those of methyl chloride, ethyl chloride, lead, sodium, acetone, alkyl aluminum compounds, sodium thiosulfate, sulfur and ferrous and ferric salts;

- Identification of the "soaps" employed in the various batch stripping operations;

- Identification of solvents and/or detergents employed in equipment cleaning (e.g., sodium sulfide/water solution, etc.);

- Identification of compounds in the "petroleum" protective layer employed in sodium storage/transport;

- Annual generation rates of certain aqueous wastes generated as a result of tetraalkyllead production, including Wastes A-1 through A-4, Figure I; Wastes A-5 through A-8, Figure II; Wastes A-9 through A-12, Figure III; Waste A-13, Figure IV; and Waste A-14, Figure V (Figures I - V are attached);

- Annual generation rates of flue dust generated as a result of tetraalkyllead production, including Waste S-1, Figure I; Waste S-3, Figure II; Waste S-5, Figure III; and Waste S-7, Figure V; and

- Available analytical data for wastes from tetraalkyllead production.

We are presently preparing a Sampling and Analysis Plan, based on information obtained during our visit, for the purpose of characterizing actual and/or potential wastes generated by the manufacture of tetraalkyllead compounds. We will forward a copy of this Sampling and Analysis Plan to you for your review and comment, following EPA review.

Once again, we thank you for all of your cooperation and assistance, and we await your response to the aforementioned request.

Sincerely,

Armand A. Balasco

Armand A. Balasco

/cb

cc: B.A. Kuryk

Enclosures

CONFIDENTIAL

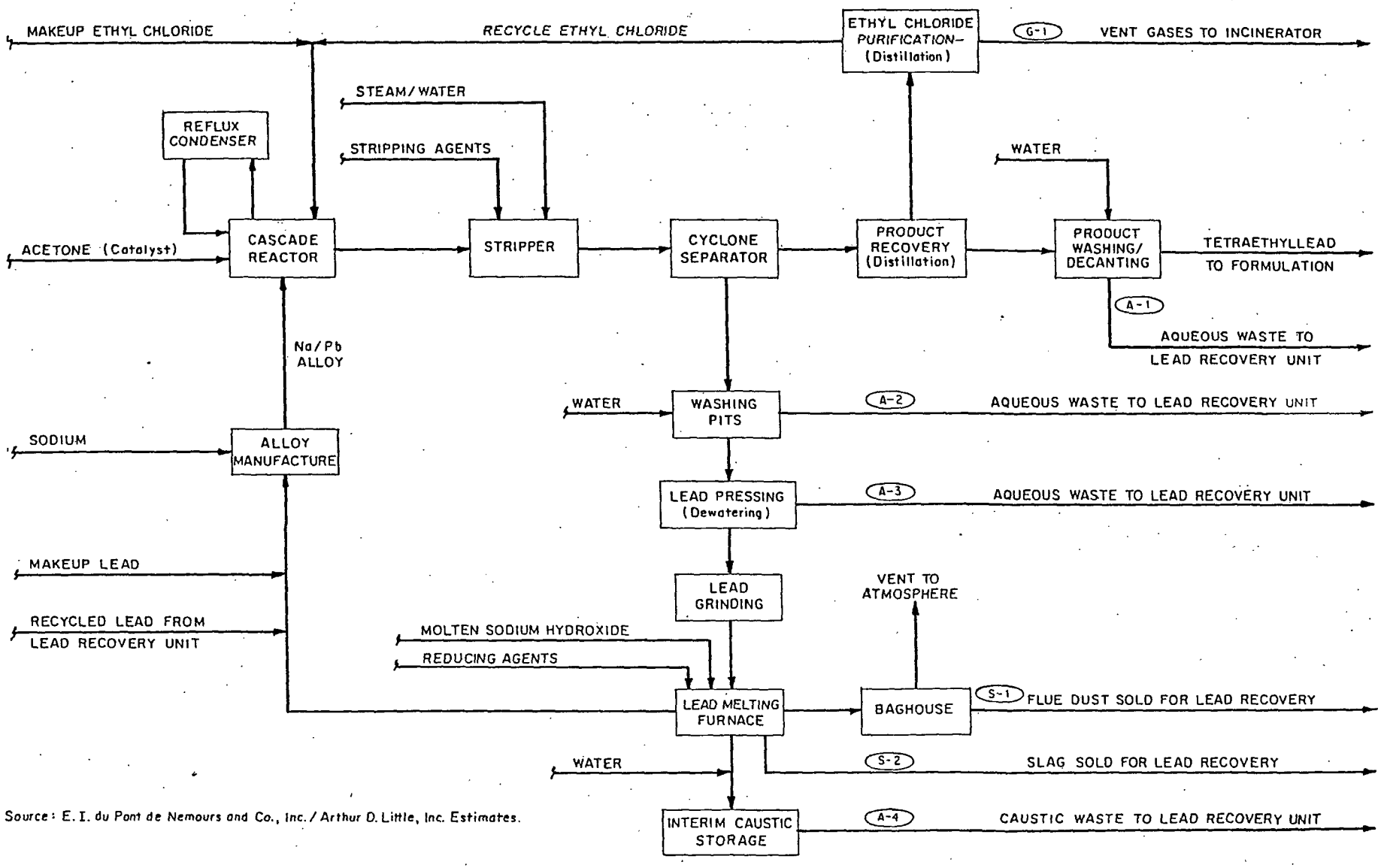

Source: E. I. du Pont de Nemours and Co., Inc. / Arthur D. Little, Inc. Estimates.

FIGURE I – PROCESS FLOW DIAGRAM – CONTINUOUS TETRAETHYLLEAD PRODUCTION UNIT E. I. du PONT de NEMOURS AND COMPANY, INC. – DEEPWATER, NEW JERSEY PLANT

CONFIDENTIAL

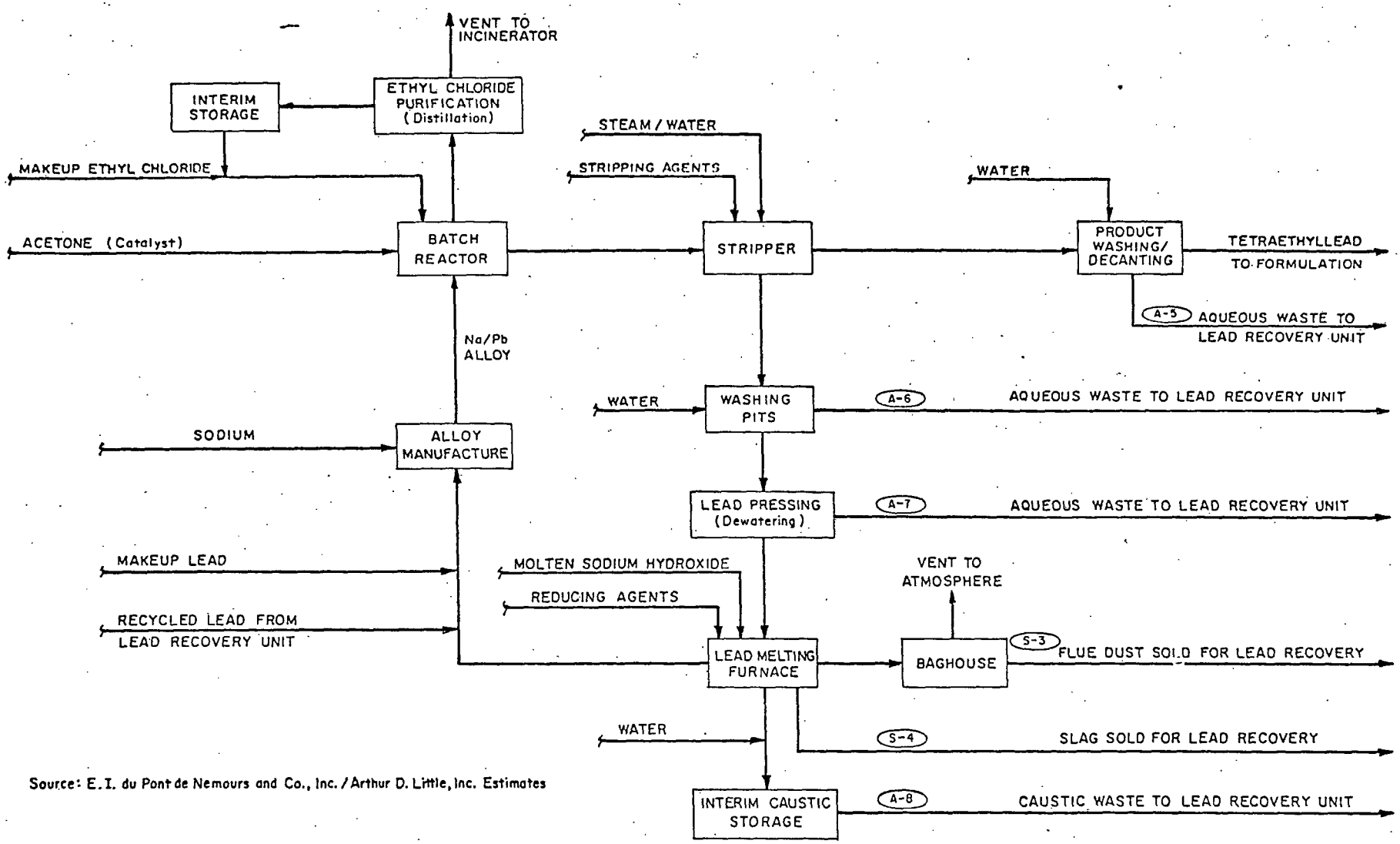

Source: E.I. du Pont de Nemours and Co., Inc. / Arthur D. Little, Inc. Estimates

FIGURE II - PROCESS FLOW DIAGRAM - BATCHWISE TETRAETHYLLEAD PRODUCTION UNIT
E. I. du PONT de NEMOURS AND COMPANY, INC. - DEEPWATER, NEW JERSEY PLANT

CONFIDENTIAL

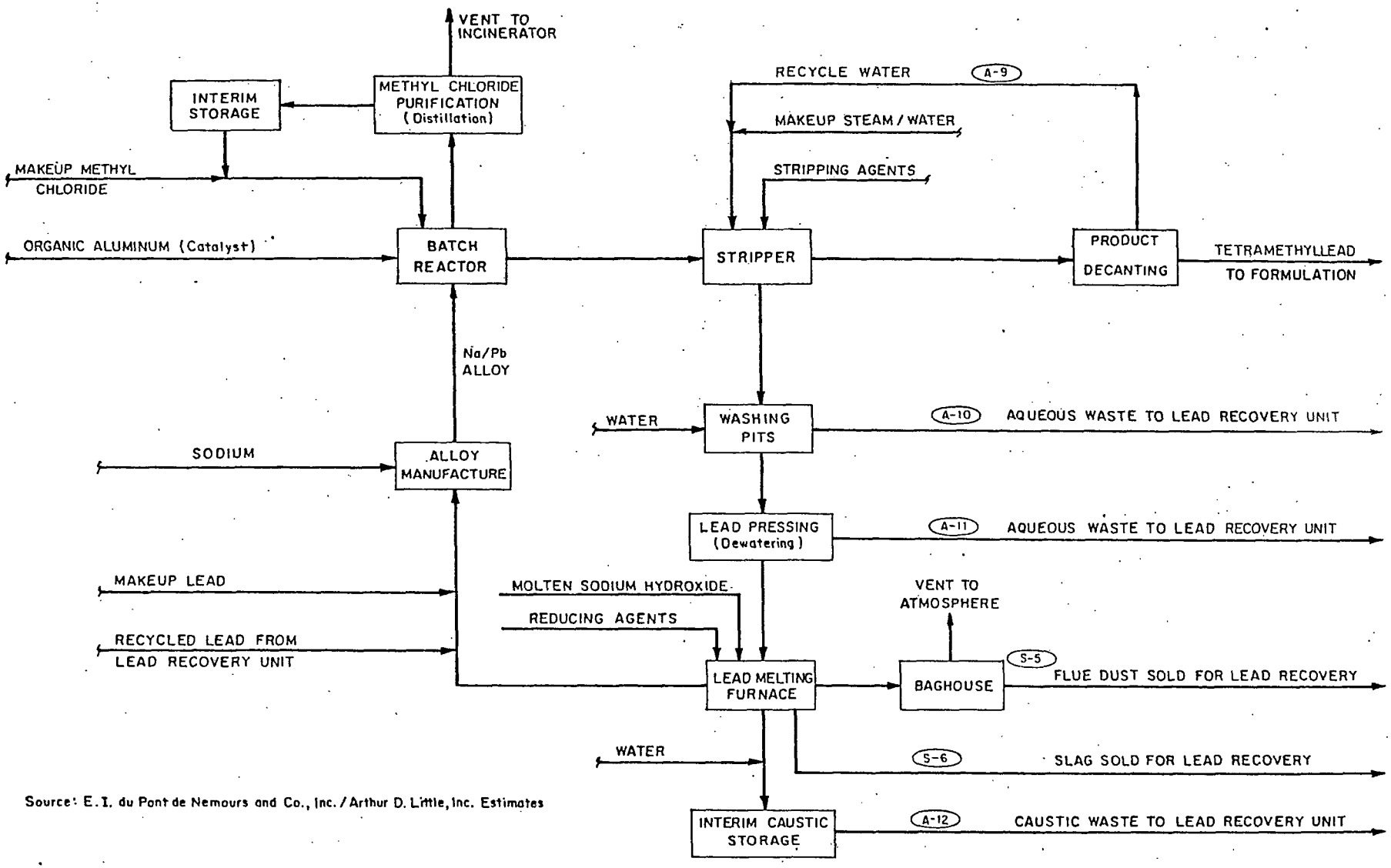

Source: E.I. du Pont de Nemours and Co., Inc. / Arthur D. Little, Inc. Estimates

FIGURE III - PROCESS FLOW DIAGRAM - BATCHWISE TETRAMETHYLLEAD PRODUCTION UNIT
E. I. du PONT de NEMOURS AND COMPANY, INC. - DEEPWATER, NEW JERSEY PLANT

CONFIDENTIAL

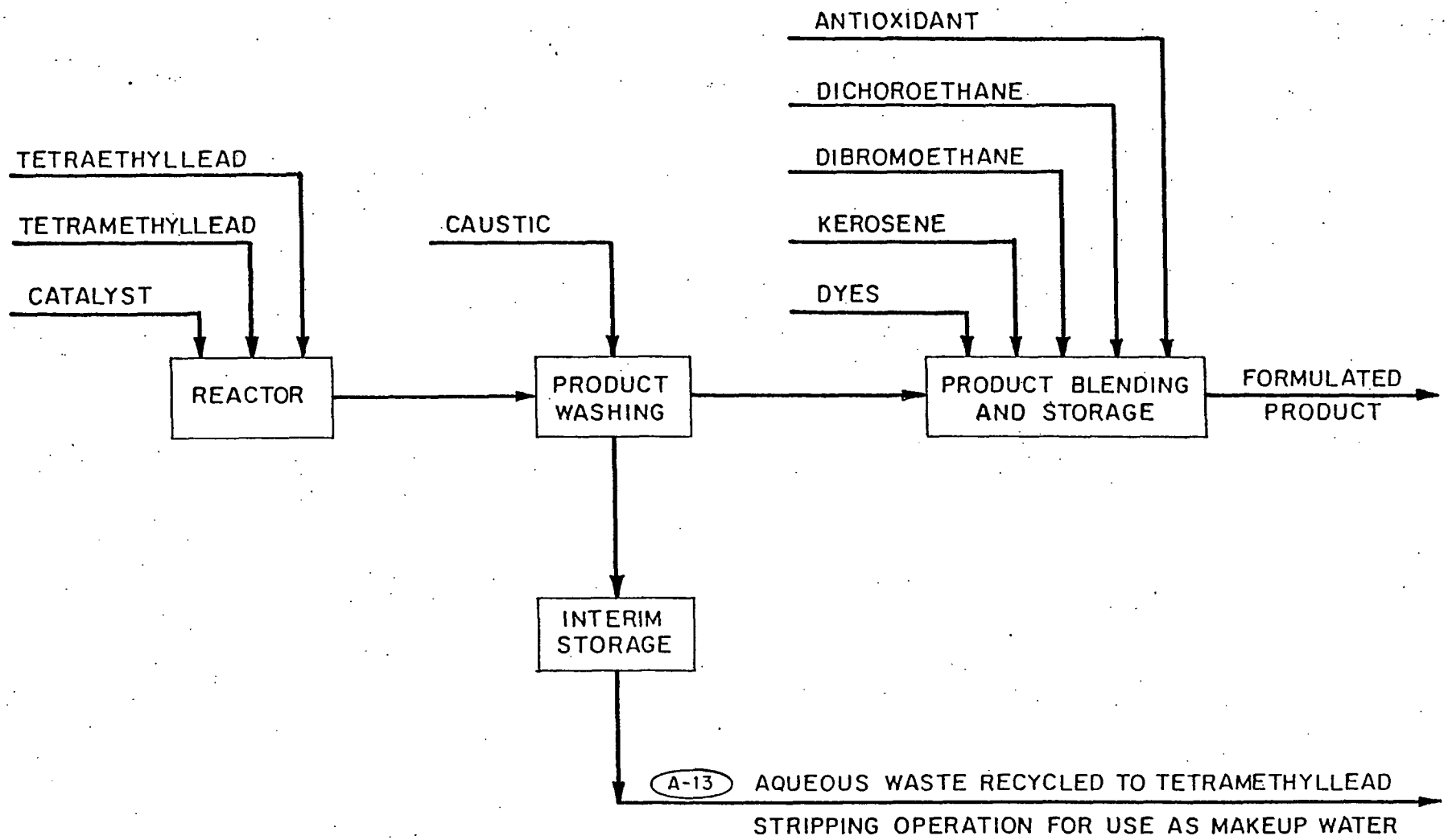

Source: E. I. du Pont de Nemours and Co., Inc./Arthur D. Little, Inc. Estimates.

FIGURE IV - PROCESS FLOW DIAGRAM - TETRA(METHYL/ETHYL)LEAD FORMULATION UNIT
E. I. du PONT de NEMOURS AND COMPANY, INC. - DEEPWATER, NEW JERSEY PLANT

CONFIDENTIAL

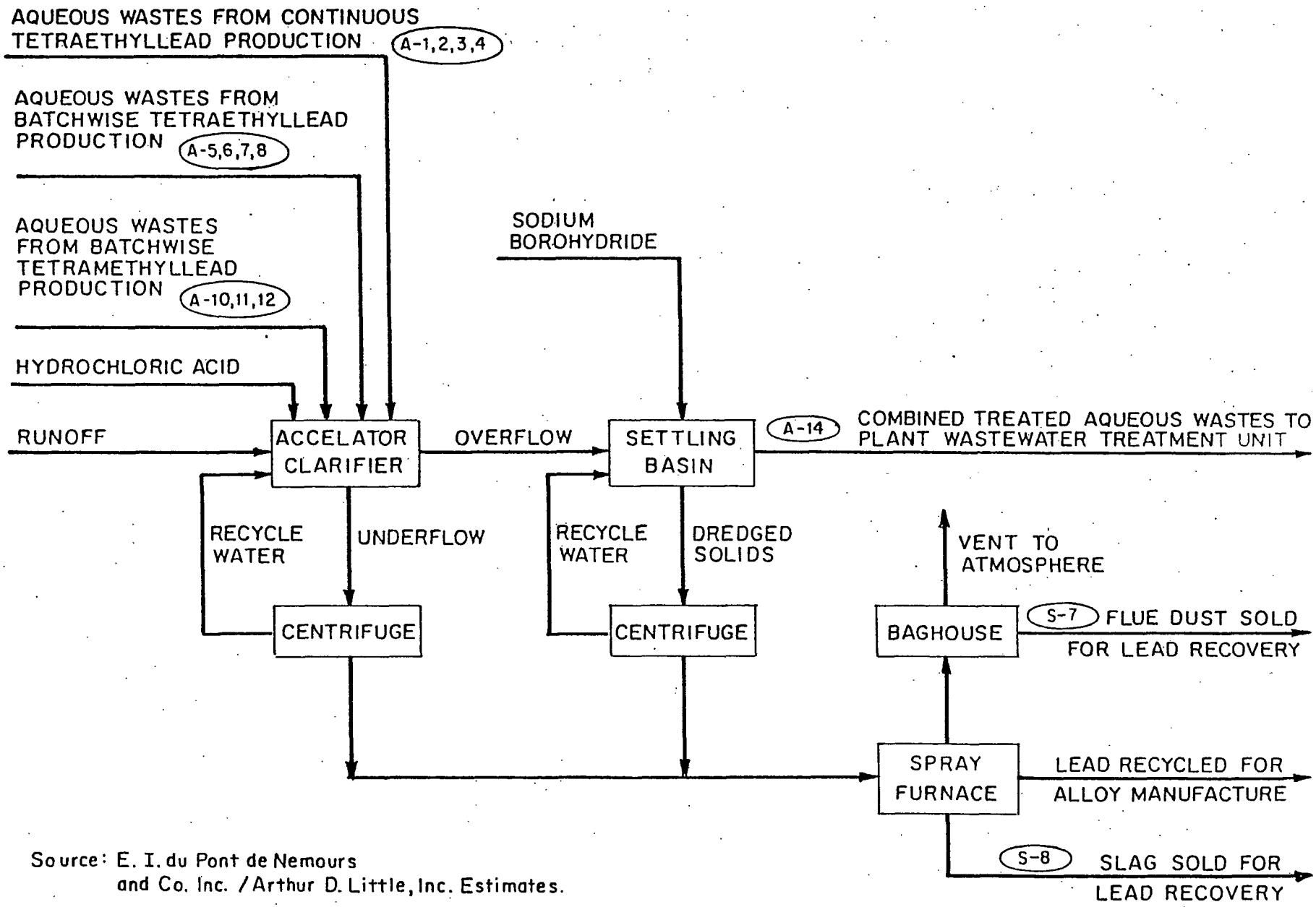

Source: E. I. du Pont de Nemours and Co. Inc. / Arthur D. Little, Inc. Estimates.

FIGURE V - PROCESS FLOW DIAGRAM - LEAD RECOVERY UNIT
E. I. du PONT de NEMOURS AND COMPANY, INC.
- DEEPWATER, NEW JERSEY PLANT

Attachment 5

DuPont Response of May 30, 2012 to Raritan Bay Information Request

management AHP
Conf. Room
5/6/82
10:20 AM ON

Arthur D. Little / EPA Survey
Guidelines

- Who
- What do they want?
  - What are lead waste streams - solid, liquid
  - How much waste?
  - Process Block flow
  - How analyze
  - Take samples

- Secrecy Agreement
  - Signed?
  - Covers?

- What do we give them?
  - General package / 3 waste streams
  - Samples of 3 waste streams
  - Analytical procedures
  - Tour of Recovery System / RCRA facilities / lab
  - Data on Request - Draw line on
    - Detail?
    - Confidentiality?
    - How Submit Requests?

- What do we not give them?
  - Unrequested information
  - WWTP / incinerator data
  - Aqueous recovery / Furnaces as waste

- Cost data ?
- Tour of Production buildings
- FR 65, C-Bldg

- Who meets with them ?
  - Initial - G.C./A.P., RNW/RAM, BFG/BHW ?
  - Area / Tour - RNW/AP / Senior (BZM, WJD)
  - Analytical ?
  - Wilmington ?

- SAMPLING
  - Area will do : RNW / Senior , 24 hr composite
  - Duplicate Samples
  - Duplicate Analyses
  - Analytical ?
  - WWTP, Ground, Scrap, all process streams ?
  - Sample Shipment / Labeling

- To Do
  - Finalize initial package
  - Discuss procedures with Seniors
  -

ROUGH DRAFT

WASTE GENERATION

OF

ORGANOLEAD MANUFACTURE

3

ORGANOLEAD MANUFACTURE

The Petchem Area of Chambers Works manufactures the organolead compounds tetraethyl lead, tetramethyl lead, and redistribution mixtures of these. These products are sold as blended mixtures with ethylene dichloride and/or ethylene dibromide and small quantities of dyes, antioxidants, and inert diluents. The blends are known generically as motor fuel antiknock compounds (MFAC). The chemistry involved and the manufacturing processes are described in the following references:

- Frye, F. W. and Shapiro, H., "The Organic Compounds of Lead," Interscience Publishers, a division of John Wiley & Sons, New York (1968).
- "An Integrated Plant for T.E.L.", The Industrial Chemist, 9/54, pages 429-436.
- "Associated Ethyl's New Installations", Petroleum, 6/54, pages 221-225.
- "Tetraethyl Lead", Kirk-Othmer Encyclopedia of Chemical Technology, Vol. 14, pages 180-195.
- U.S. Patent 2,891,977 to Du Pont, 6-23-59.
- U.S. Patent 2,723,227 to Du Pont, 11-8-55.
- U.S. Patent 2,697,979 to Du Pont, 12-28-54.
- U.S. Patent 2,691,571 to Du Pont, 10-12-54.

PRODUCTION CAPACITY

The rated in-service production capacity for MFAC is approximately 250$\overline{M}$ lb. per year. This is split as follows: 60% to continuous TEL products, 20% to batch TEL products and 20% to batch TML products.

Current production levels are about 170$\overline{M}$ lb. per year of MFAC. The current lead consumption rate is about 70$\overline{M}$ lb. per year.

WASTE GENERATION

Attached (Figures 1-4) are the block flow diagrams for the alkyl lead processes. These processes all have lead recovery operations since three-quarters of the lead fed to reactors must be recycled. These primary recycle streams are termed "Lead Melting" in the diagrams. Lead in aqueous streams which are not collected in the primary recycle processes is recovered as lead metal, slag, or dust in the secondary lead recovery system. Slag and dust are shipped to outside refiners for further recovery as metal. The aqueous recovery system consists of chemical (sodium borohydride) and physical (clarifier and centrifuges) separation of lead bearing solids from gross water followed by evaporation of water in spray furnaces. Identifiable wastes from these processes are: outfall from settling basin, flue dust from furnace bag houses, and some used heat transfer and lubricating oils. Additional data concerning these wastes are attached.

There are no substantial liquid or solid by-products formed in these processes other than those mentioned.

FIGURE 1 CONTINUOUS TEL MANUFACTURE

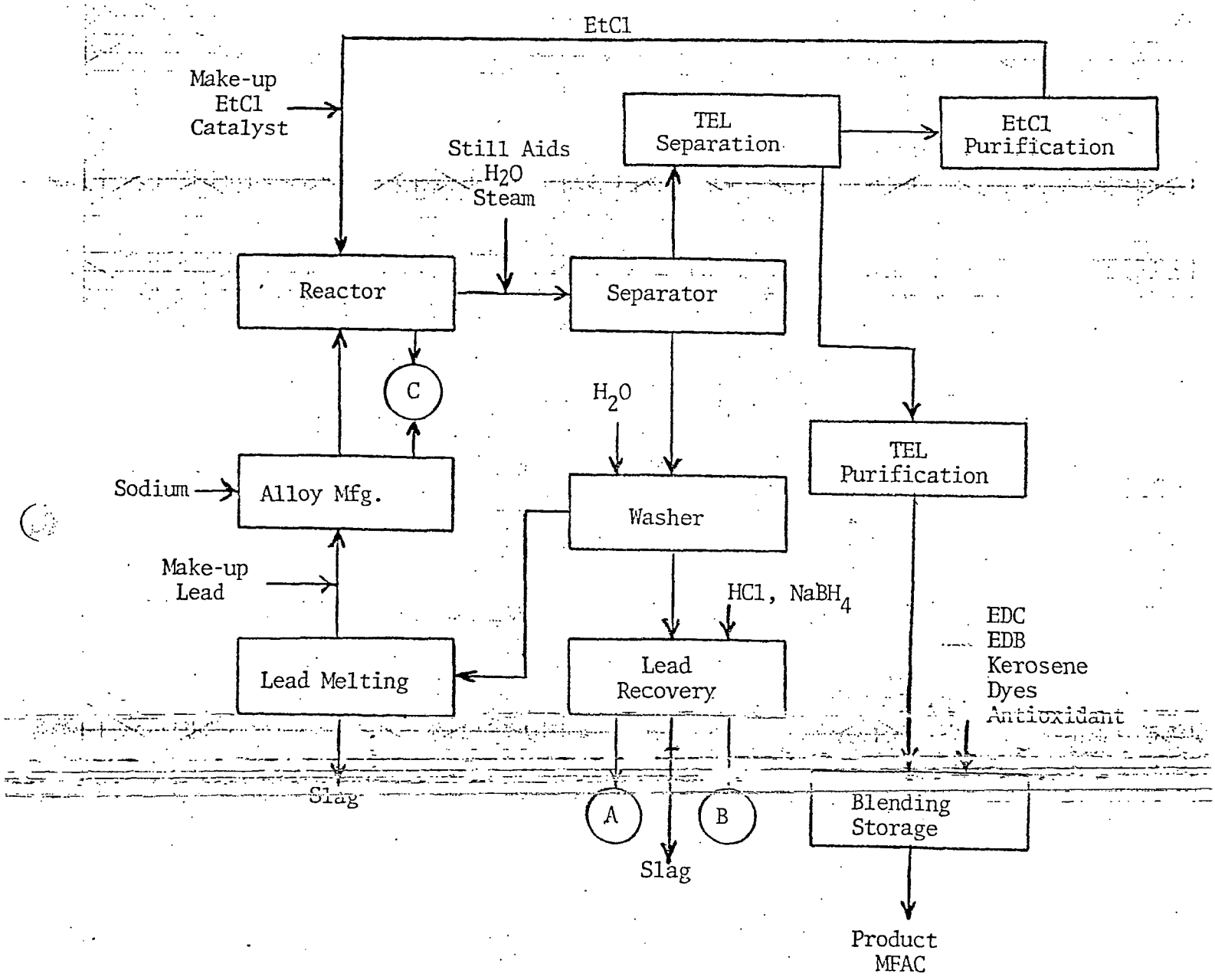

FIGURE 2 BATCH TML MANUFACTURE

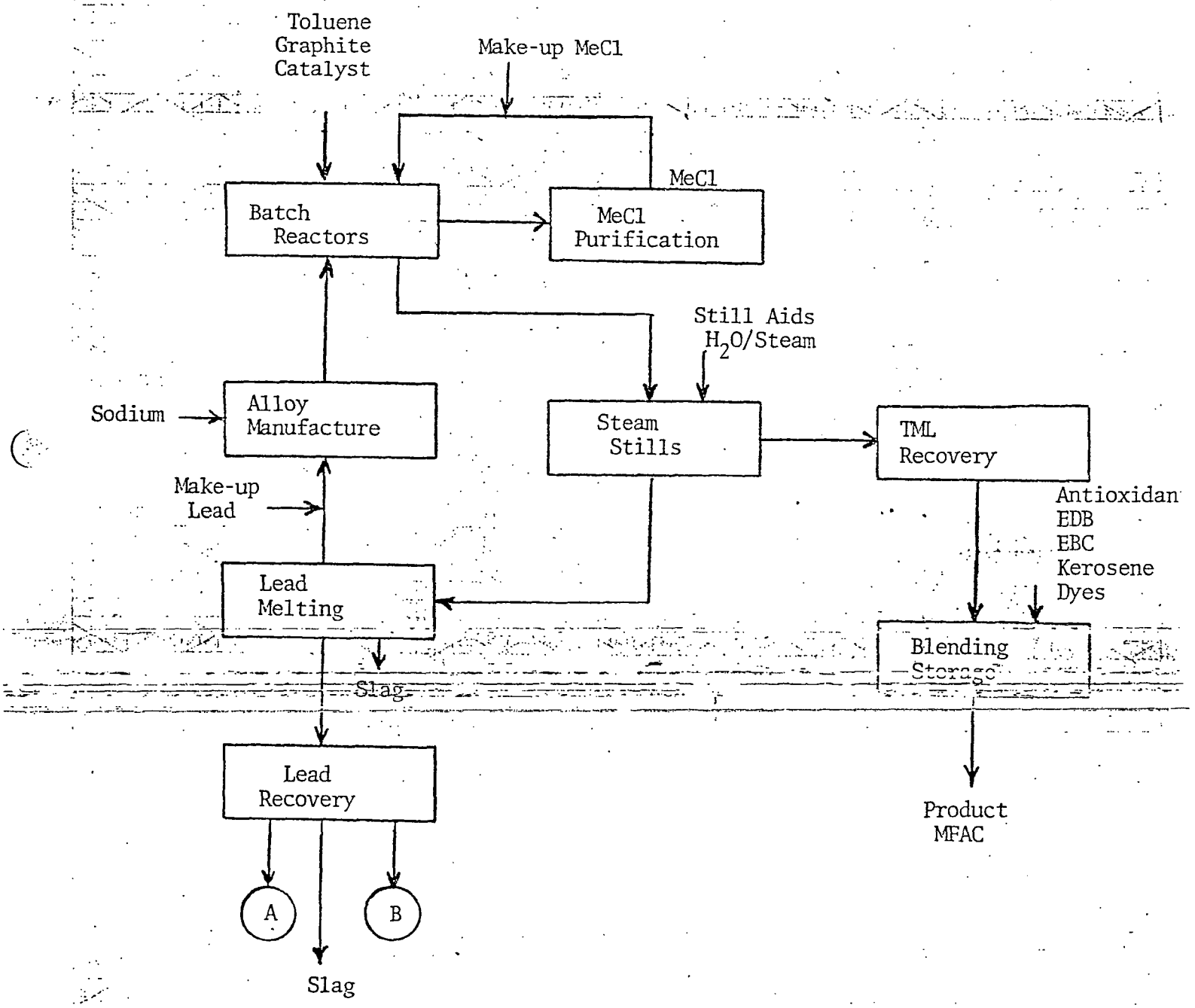

FIGURE 3 BATCH TEL MANUFACTURE

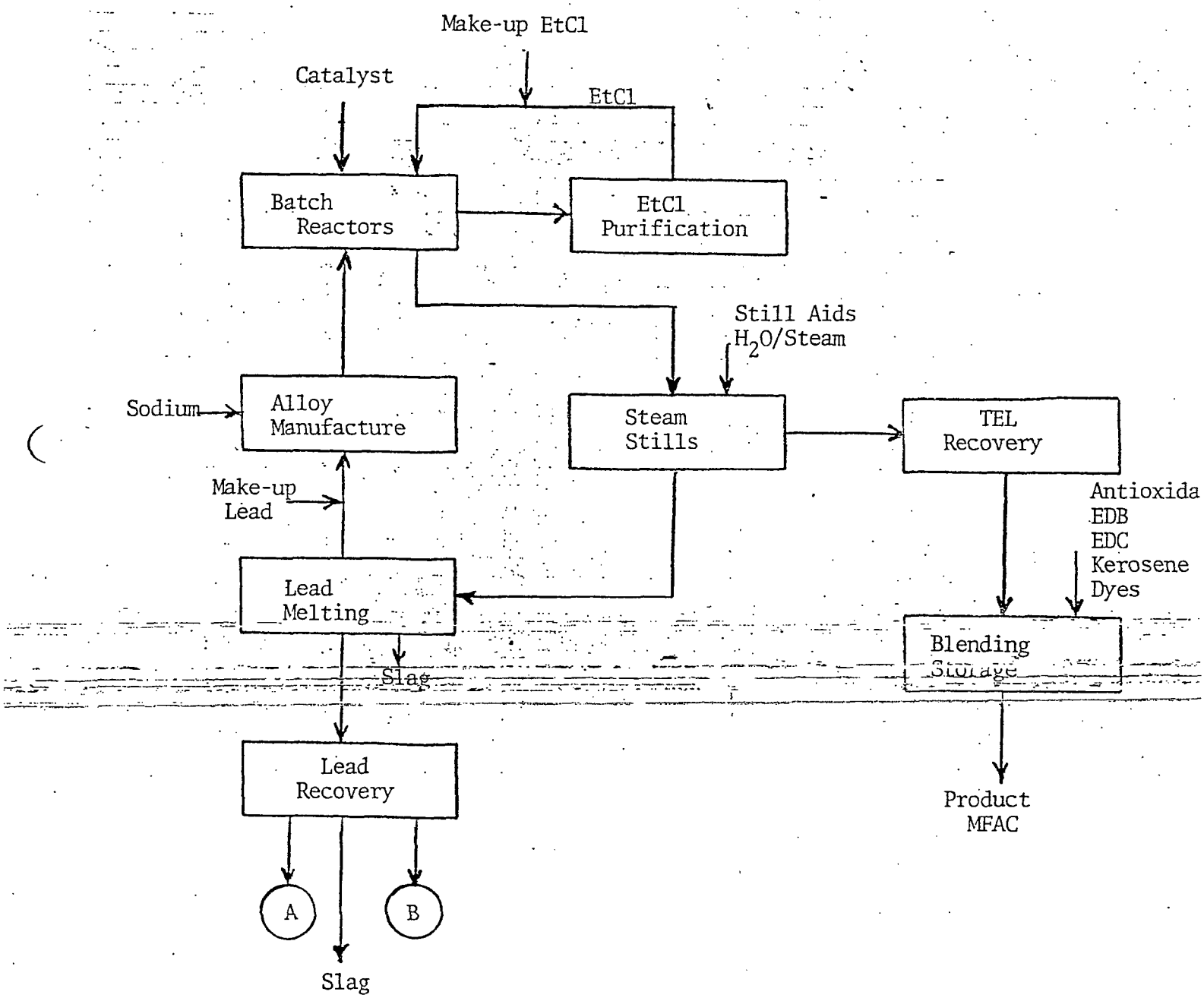

FIGURE 4 TMEL MANUFACTURE

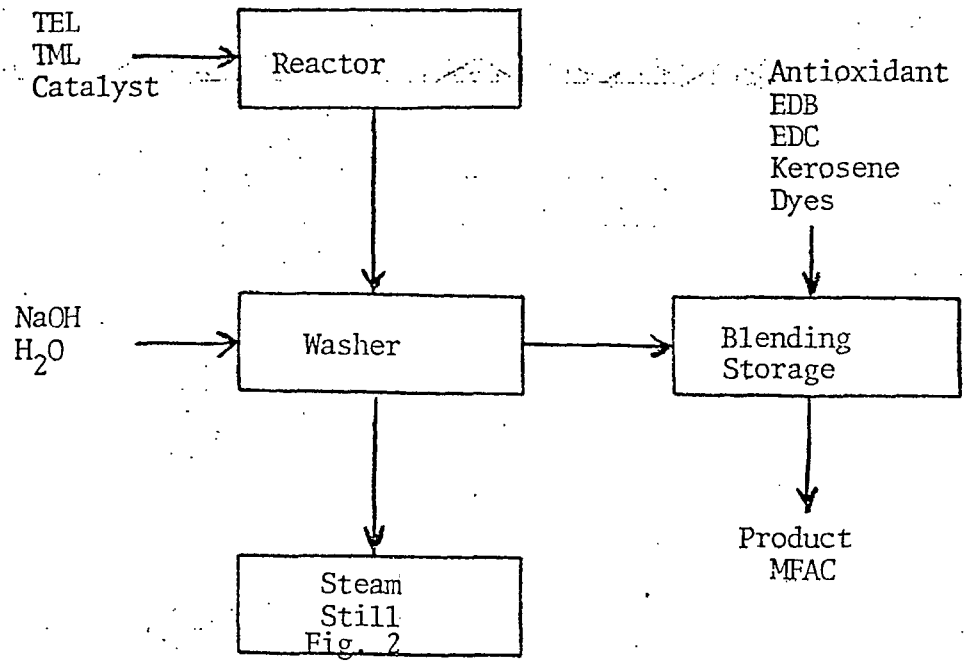

WASTE IDENTIFICATION

Waste Stream: A

Type of Waste: Chemically treated water

Type of Waste Management: The waste is contained in a surface impoundment and then biologically treated in an on-site waste water treatment plant. This treated water is discharged to surface water under NPDES permit. No changes in waste management being considered currently.

Quantity of Waste: 4.8×10^9 lb. in 1981 (28 lb./lb. MFAC)

Capacity: 1.3×10^{10} lb./yr.

Waste Properties: This waste stream is an aqueous liquid which typically contains 0-.007% solids in water at a pH of 8.0 to 9.5.

Waste Components: This waste stream normally contains total lead (dissolved and particulate) in the range 0.0004-.0008% distributed about equally between dissolved and particulate. The solids content ranges from 0 to 0.007% and the dissolved organic content is 0.002 to 0.005%.

C, graphite, Et OH, Et Cl, TEL, $(Cl_2)_2CO$ dewatr

Uncharacterized components are expected to be: NaCl, Borates, iron, aluminum, chromium, fluorides, and all normal components of ~~ground water~~.

~~sinus water~~ ?
Surface water

Are the non-lead solids & organics?

Waste Stream: B

Type of Waste: Solid baghouse dust

Type of Waste Management: The material is stored in a RCRA storage area, then shipped to a materials recovery company.

Quantity of Waste: 1.1×10^6 lb. in 1981 (.006 lb./lb. MFAC)

Capacity: 5.0×10^6 lb./yr.

Waste Properties: The waste is a brownish to yellowish powder-like solid. The density of the material ranges from 32 to 68 lb./Ft.^{3}. The materials EPA number is K069.

Waste Components: The material contains 50-70% lead as oxides, carbonates, and/or halide compounds. Sodium ions comprise 0-5%, chlorides are 0-8%, sulfur ranges from 0-3%, and carbon ranges from 0-2%. Silica and dirt components are also constituents.

combustion flue ash? from oil combustion

C ?
residues

Waste Stream: C

Type of Waste: Spent lubricating and heating oils

Type of Waste Management: The material is incinerated at an on site incinerator.

Quantity of Waste: 3.1×10^4 lb. in 1981 (.0002 lb./lb. MFAC)

Capacity: 5.0×10^4 lb.

Waste Properties: These materials are viscous oil liquids

Waste Components: Dowtherm components (Diphenyloxide, Diphenyl), mineral oil, hydrocarbon oils in the range of 95-99%. Uncharacterized but possible minor components are polymers, inhibitors, iron compounds, and lead compounds.

RCRA FACILITIES CURRENTLY USED TO MANAGE WASTES

TLR Basin

This facility is a surface impoundment area which began operation in 1970. The aqueous lead bearing material is stored in this facility. No other wastes are treated or stored here. The capacity of the facility is approximately 7×10^9 gal. The facility is not lined, but there is an on-site leachate collection system.

Flue Dust Storage

The baghouse dust containers are stored in a RCRA designated area. Typical quantities stored range from 5500 to 55000 gallons. The area is surfaced with asphalt and any liquid run-off is collected and re-cycled in the recovery system.

2 - 3/16/82

Continuous Process Plant - T.E.L. Manufacturing

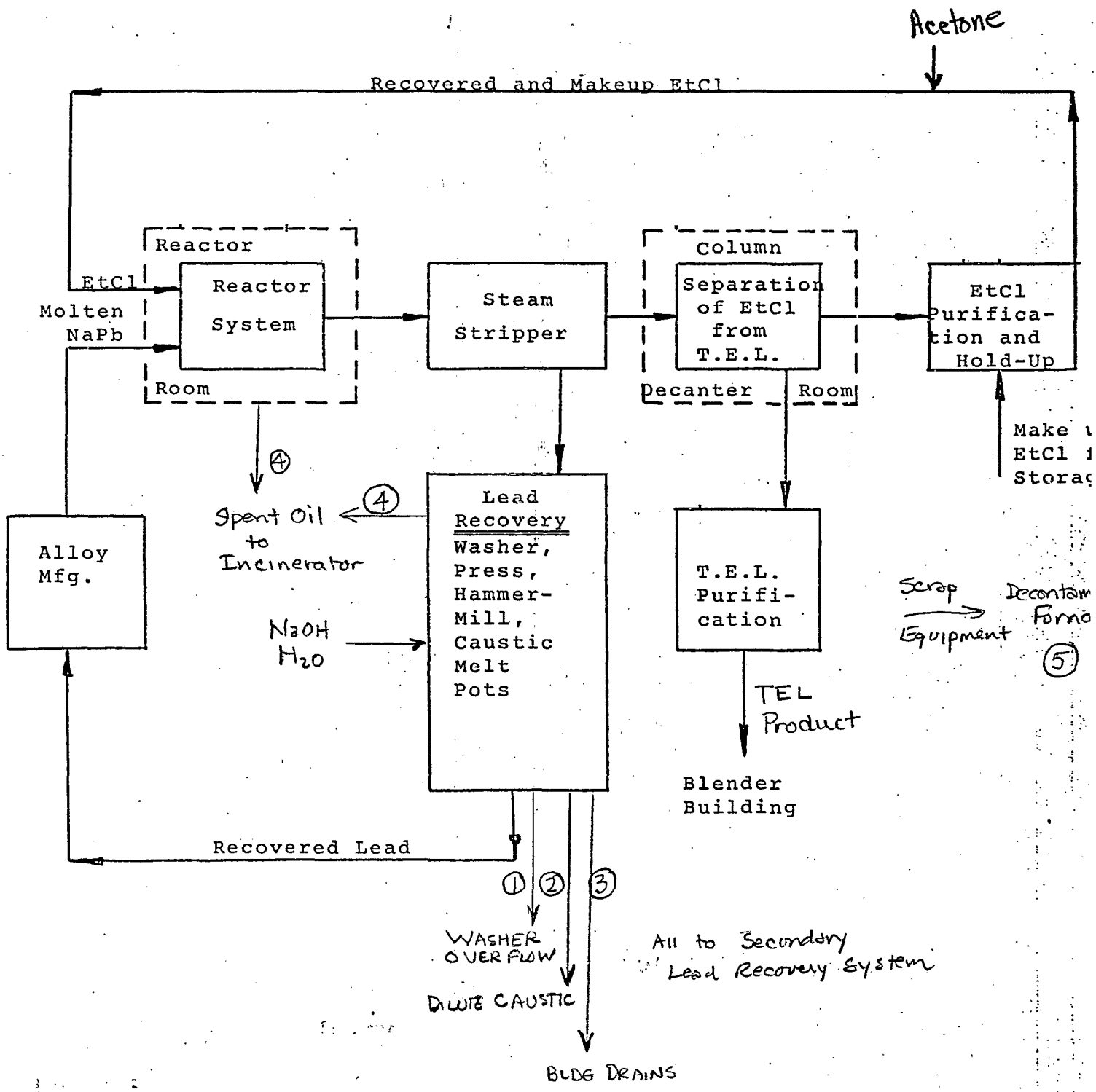

Product	Maximum Annual Production Capacity	Portion of 1981 Process was in Operation
TEL	96,000,000	67

Table II —

A. Product Process: TEL MANUFACTURE + Continuous Process

B. Residual Identification Number	C. RCRA Identification (I,C,R,E,T, or H)	D. Properties of Residual	E. Known Compounds, Concentrations, Ranges	F. Other Expected Compounds
1	E	Aqueous slurry	H_2O 90 - 99.9%	EtCl, EtOH
		0.36 % Solids	Pb } .1% - .7%	Acetone
		0.25 % Pb	PbO }	Lead oxychlorides, Chromates
		0.018% DOC	NaOH .1 - .3 %	$PbCl_2$, Bismuth Cmpds
		pH 11.5	NaCl 7 - 9 %	Acetone derivatives
		8 % NaCl	Solids .15% - 1.0%	Normal water constituents
			TEL 0 - .01 %	Chromium (+6)
			pH 10-12	NH_4OH, NH_4Cl
2	C	Aqueous Slurry	H_2O	Carbon
		1% NaOH	Pb }	Chromium (hydroxide)
		12 pH	PbO }	Normal water constituents
			NaOH 1 - 2 %	$PbCl_2$, $PbCO_3$
			NaCl	Sodium Carbonates
			pH 8 - 13	Acintol
3	E	Aqueous	H_2O 98 - 99.9 %	oil
		pH 9.5	Pb } 6 - 20 ppm	dirt
		.002% solids	PbO }	Normal water constituents
		.13 % NaCl		
		.0009 % sol Pb	NaCl .1 - .2 %	
		.04 % DOC		
			DOC .01 - .05%	
4	E	Viscous Liquid	99 % Hydrocarbon	dirt
		Spent Hydrocarbon Oil	oils (A 455, A 522,	trace metals (Fe, Al.
		for lubrication	A 532)	etc).
			<1% TEL	
5	None	Solid metal	Iron and	Normal metal
		equipment	Steel equipment	equipment materials
			with	(Gaskets, oils, greases
			Traces of Lead alkyl	etc.)
			contamination	

3

7. Specific On-site Residuals Management Information

Provide specific information for residuals managed on-site using available information to complete the following sections which pertain to your residuals management operations.

A. Storage or Treatment in Tanks*

B. Storage or Treatment in Containers*

C. Storage or Treatment in Piles*

D. Burning in a Boiler

E. Incineration

F. Surface Impoundments*

G. Landfills*

*If residuals are managed by these methods, provide the following information:

(1) Are groundwater monitoring data available? ☐ Yes ☐ No

(2) Are geologic or hydrogeologic data available? ☐ Yes ☐ No

A. Storage or Treatment in Tanks

Provide the following information regarding storage and treatment in tanks in 1981:

Tank	Residuals Managed [1]	Design Capacity [2]	Used for Storage (S) and/or Treatment (T) (Indicate S and/or T)	Covered (Circle Yes or No)	Secondary Containment [3] Provided (Circle Yes or No)
1	We will	Provide	Specific information	Yes No	Yes No
2	on Tanks	as required.	We do not	Yes No	Yes No
3	currently	consider	the Primary and	Yes No	Yes No
4	Secondary	Lead	recovery facilities	Yes No	Yes No
5	to contain	waste -	They contain	Yes No	Yes No
6	Process	material	for recycle.	Yes No	Yes No
7				Yes No	Yes No
8				Yes No	Yes No
9				Yes No	Yes No
10				Yes No	Yes No

[1] Provide the Residual Identification Number for residuals stored or treated in the tank in 1981.

[2] Use the following code to designate the tank capacity:

A < 10,000 gallons

B 10,000 gallons to 100,000 gallons

C > 100,000 gallons to 1,000,000 gallons

D > 1,000,000 gallons

[3] Secondary containment is provided when the tank is located inside a diked area where the volume of liquid that the diked area can contain is at least equivalent to the capacity of the largest tank.

5. Provide the following information on the incinerator feed:

		Corresponding Feed Rate (Tons or Gallons/Hour, Specify)
Btu content (Btu/lb)		
Typical:	_____	_____
Minimum:	_____	_____
Total metals content (% by wt.)		
Typical:	_____	_____
Maximum:	_____	_____
Total halogen content (% by wt.)		
Typical:	_____	_____
Maximum:	_____	_____

6. Are incinerator stack emissions data available: ☐ Yes ☐ No

Surface Impoundments - 3 ACRE BASIN

If any identified residual was stored, treated, or disposed in an on-site surface impoundment in 1981, provide the following information for each impoundment:

1. Year impoundment initiated operation: 1970
2. Year impoundment first used to manage identified residuals: 1970
3. Residual Identification Numbers for residuals managed in this impoundment: 1, 2, 3, 6, 8, 10, 12, 16, 18, 21, 24
4. Were residuals other than identified residuals managed in the impoundment in 1981? ☐ Yes ☒ No
5. Capacity of impoundment (gallons): 7,000,000,000 GAL
6. Does the impoundment have a liner that is designed to contain the waste? ☐ Yes ☒ No ☐ Don't know
7. Is there a leachate collection system? ☒ Yes ☐ No

   If yes, is leachate generated? ☐ Yes ☐ No

Landfills

If any identified residual was landfilled on-site in 1981, provide the following information:

1. Year landfilling initiated at site: _____
2. Year landfilling of identified residuals initiated: _____
3. Were residuals other than identified residuals landfilled in 1981? ☐ Yes ☐ No
4. Future operating life of landfill (in years): _____
5. Does the landfill have a liner that is designed to contain the waste? ☐ Yes ☐ No ☐ Don't know
6. Is there a leachate collection system: ☐ Yes ☐ No

   If yes, is leachate generated: ☐ Yes ☐ No

FIGURE 1

Continuous Process Plant - T.E.L. Manufacturing

(revised) 3/17/82

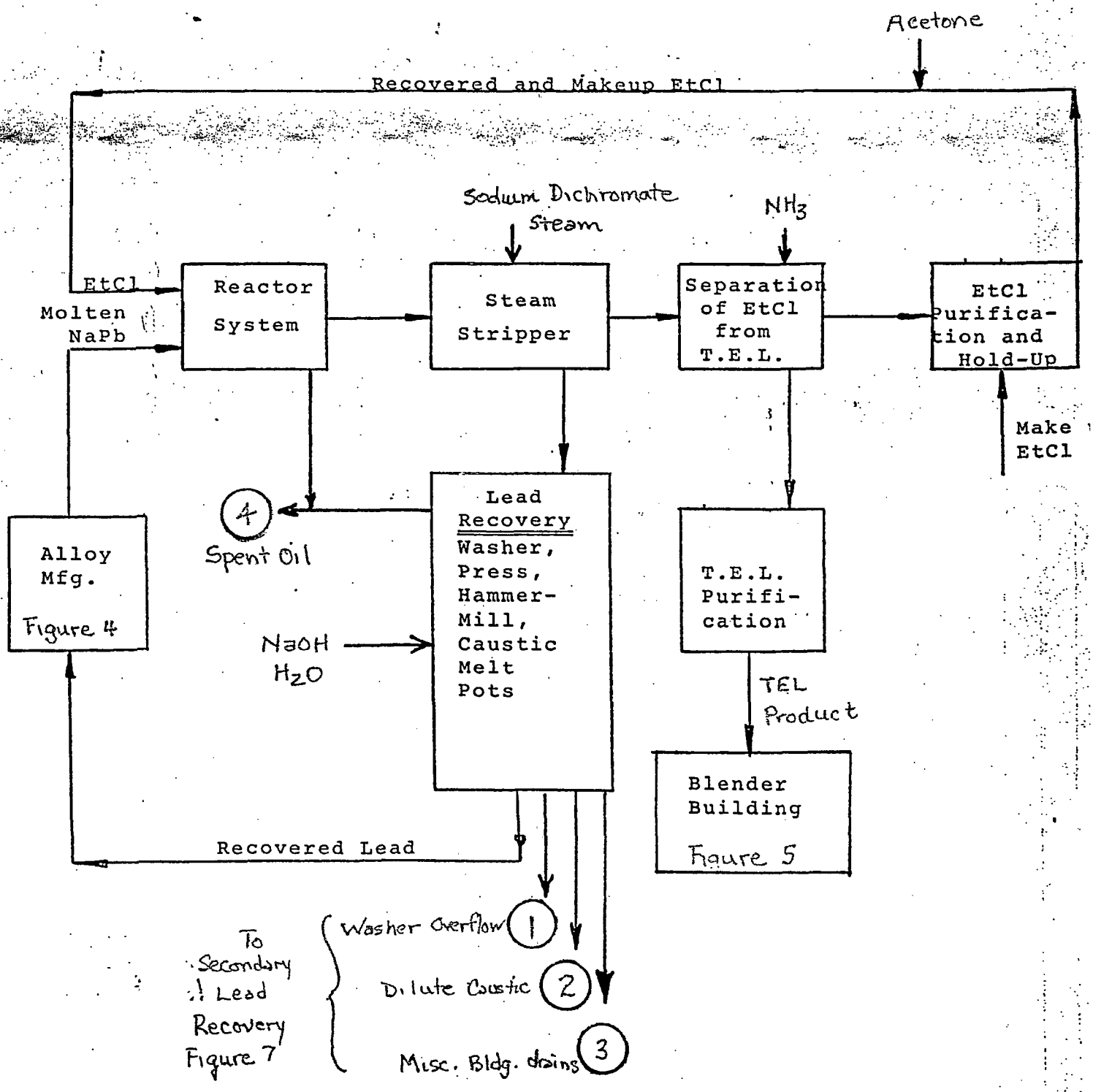

Table II —

A. Product Process: TEL Manufacture - Continuous

B. Residual Identification Number	C. RCRA Identification (I,C,R,E,T, or H)	D. Properties of Residual	E. Known Compounds, Concentrations, Ranges	F. Other Expected Compounds
1		Aqueous Slurry		EtCl, Acetone, EtOH
		0.4 % Solids	INORGANIC LEAD 0.1-0.7%	Cr(III), NH_4^+
		pH 11.5	NaOH 0.1 - 0.3%	
			NaCl 7-9%	
			TEL 0 - 0.01%	
2		Aqueous Slurry		
		1% Solids	INORGANIC LEAD	Carbon., Cr(III)
		pH 12	NaOH 1-2%	Sodium carbonates
			NaCl	
			pH 8-13	
3		Aqueous Liquid		Oil
		0.002 % Solids	INORGANIC LEAD 0.0006-.002%	Dirt
		pH 9.5	NaCl 0.1 - 0.2%	
4	E	Viscous Organic Liquid	99% Hydrocarbon	Dirt
			Oils (A 455, A522	Trace Metals
			A 532)	
			<1% TEL	

FIGURE 2

Batch Process Plant - T.M.L. Manufacturing

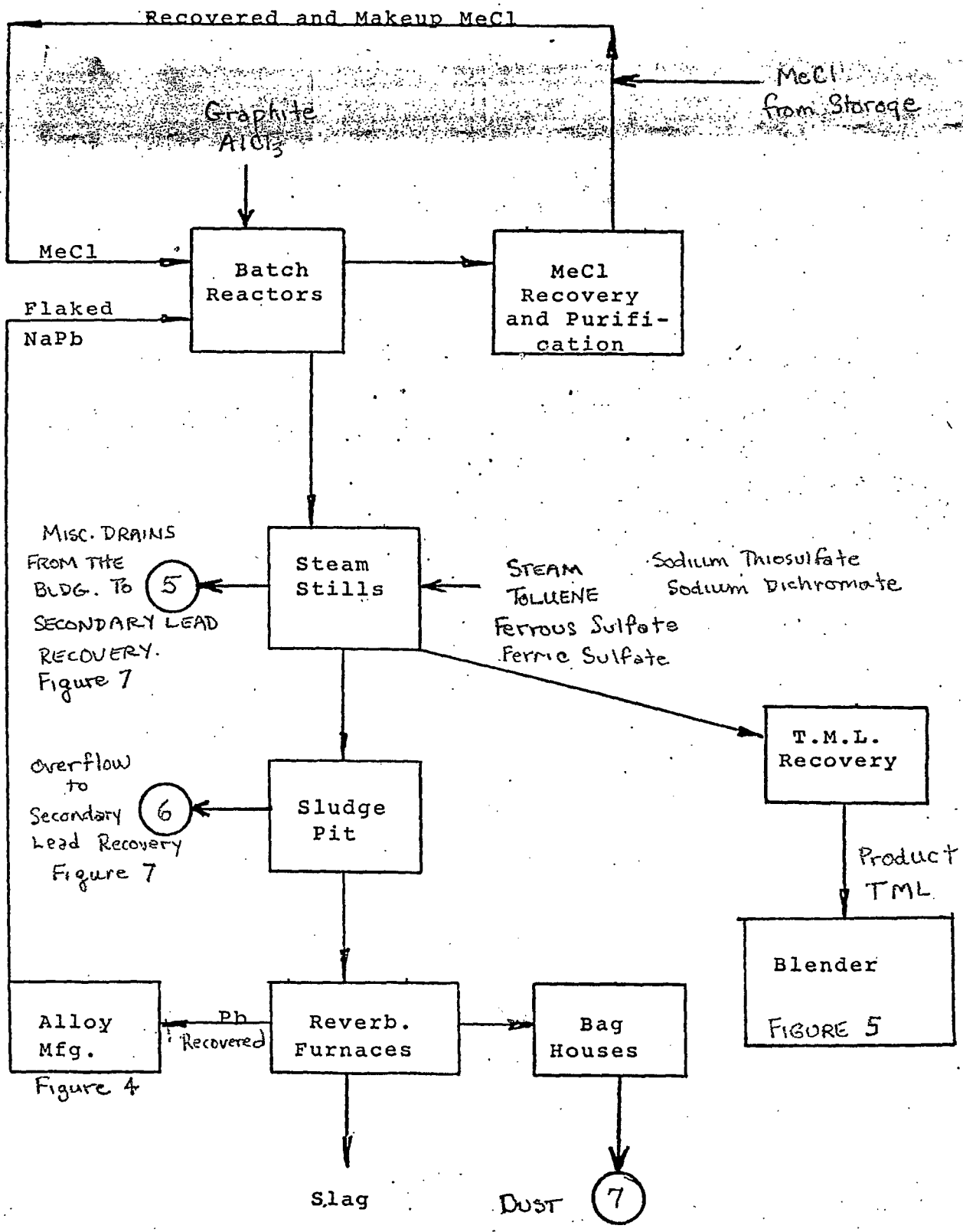

FIGURE 3

Batch Process Plant - T.E.L. Manufacturing

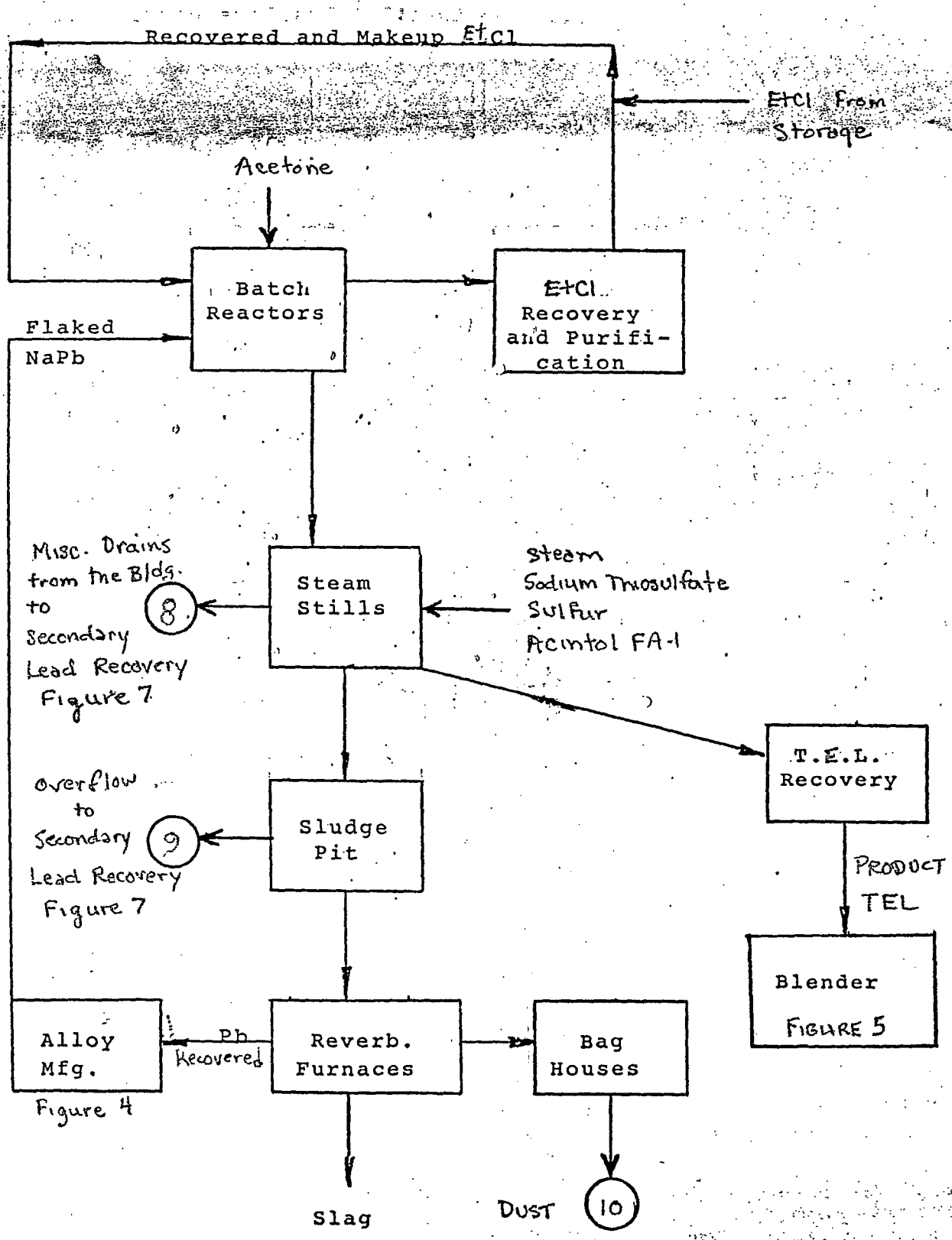

FIGURE 4

NaPb Alloy Manufacture and Distribution

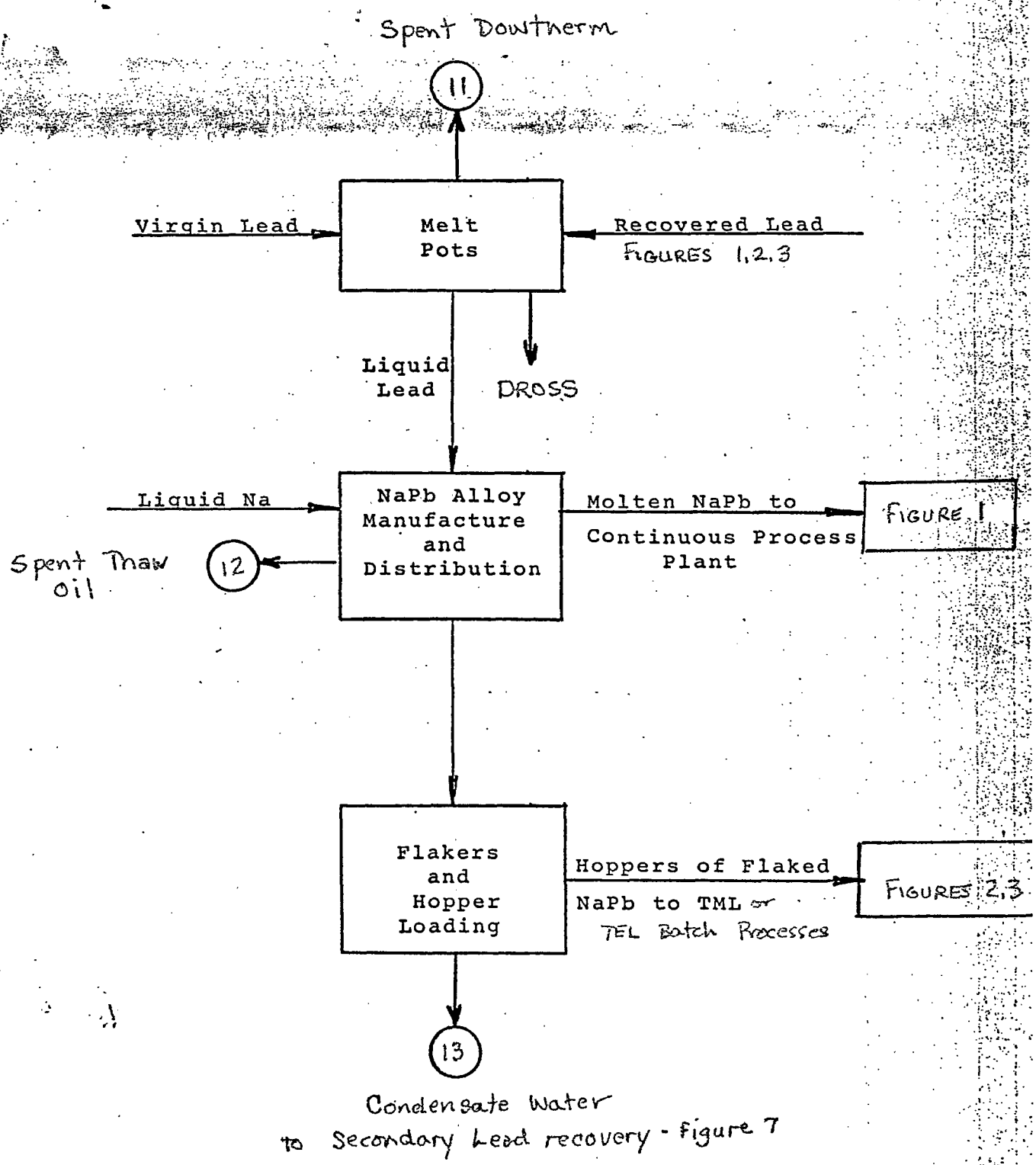

FIGURE 5

MFAC BLENDING

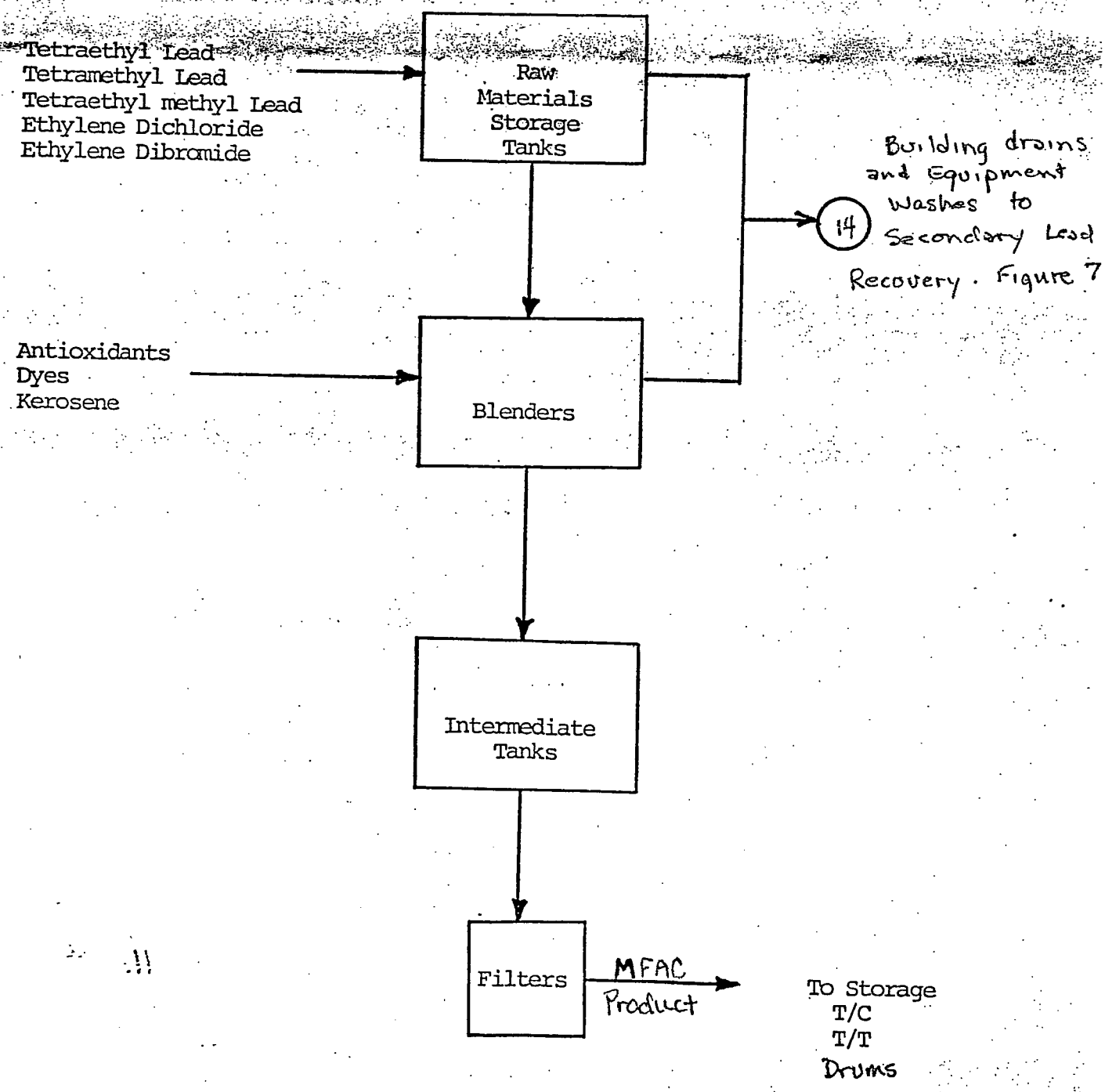

G:jps
11/82

E. I. DU PONT DE NEMOURS & CO. (INC.)

CHAMBERS WORKS
ENGINEERING
DESIGN SKETCH

DS _____
SHEET ____ OF ____
DATE _____

FIGURE 6
TMEL MANUFACTURE

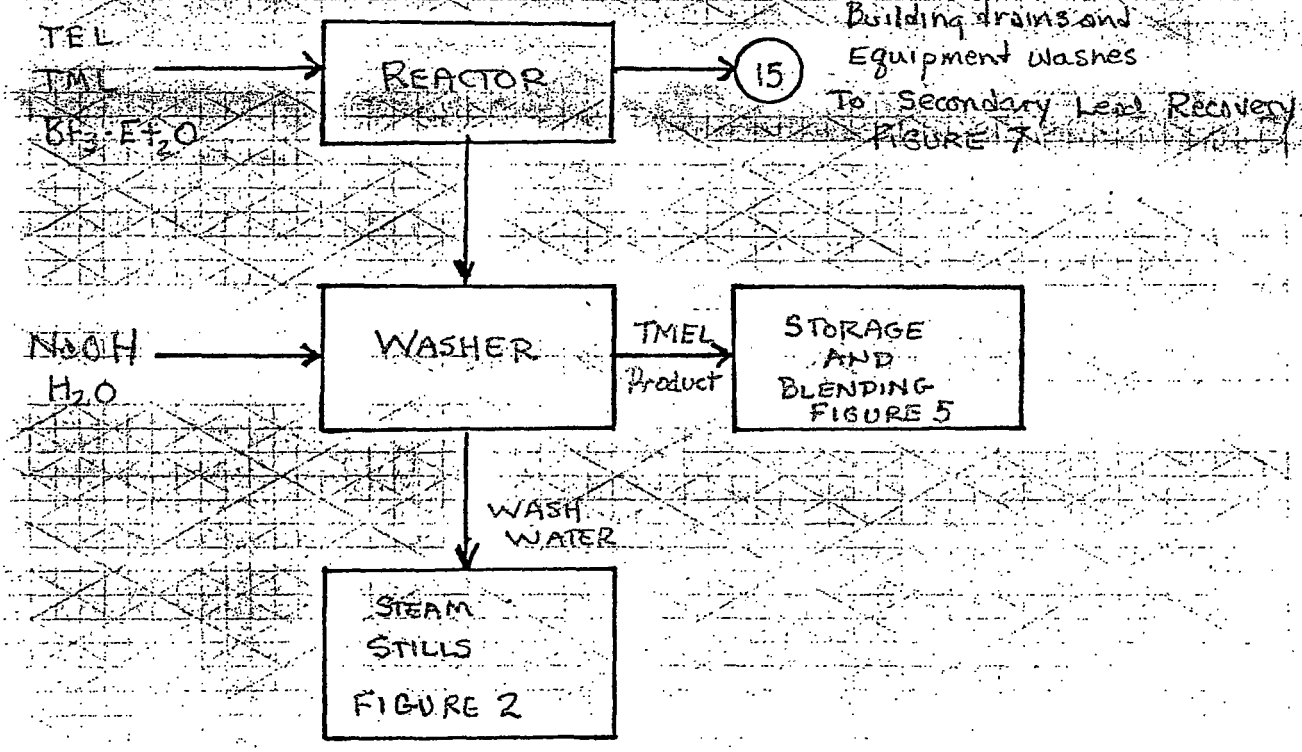

E. I. DU PONT DE NEMOURS & CO. (INC.)

JOB NO. _____
ENG. _____

CHAMBERS WORKS
ENGINEERING
DESIGN SKETCH

DS _____
SHEET ____ OF ____
DATE _____

MU-1440

FIGURE 7

SECONDARY LEAD RECOVERY SYSTEM

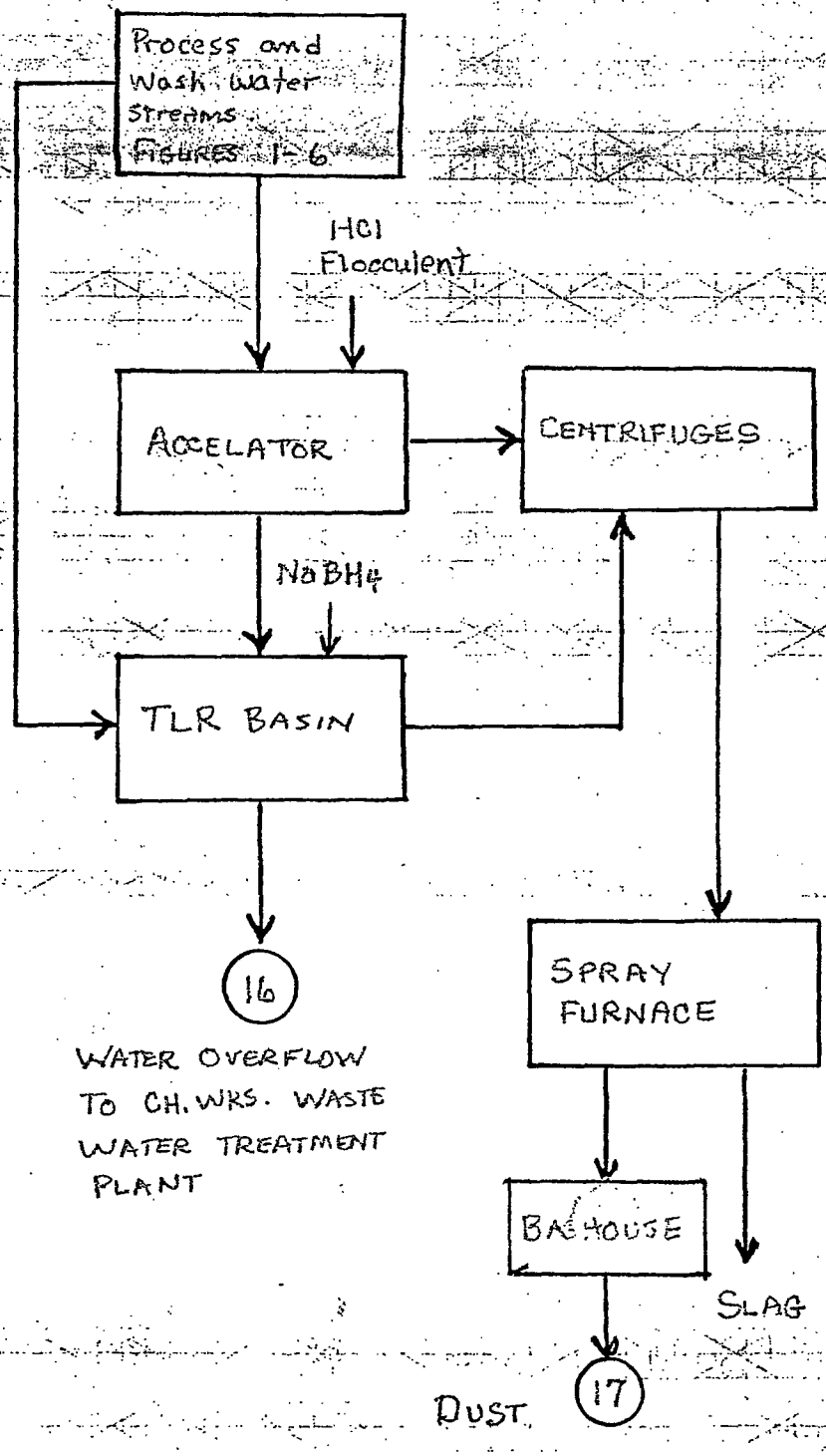

Attachment 6

DuPont Response of May 30, 2012 to Raritan Bay Information Request

cc: Farrah Thervil, CRG
4/26/12

UNITED STATES ENVIRONMENTAL PROTECTION AGENCY
REGION 2
290 BROADWAY
NEW YORK, NY 10007-1866

April 24, 2012

VIA OVERNIGHT MAIL
Bernard J. Reilly, Esq.
Corporate Counsel
DuPont Legal
1007 Market Street
Wilmington, DE 19898

ENVIRONMENTAL
APR 25 2012
LEGAL

Re: Raritan Bay Slag Superfund Site
Old Bridge, New Jersey

Dear Mr. Reilly:

I am enclosing ninety two pages of documents relating to DuPont's business transactions with NL Industries' Perth Amboy facility.

Thank you for your attention to this matter. Please contact me if you have any questions.

Very truly yours,

Frank X Cardiello

Frank X. Cardiello
Assistant Regional Counsel
USEPA – Region 2

ATT: MISS L. BANASIK

N L INDUSTRIES, INC.

METAL DIVISION

WEEKLY METAL INVENTORY

REGION Eastern PLANT Perth Amboy

NET TONS LEAD CONTENT

	Week Ending	10/11/74			
MATERIAL TO SMELT:					
100	Scrap Whole Batteries	6			
100	Scrap Battery Plates	478	Battery Plates & Tops		
95	B/MF Scrap	977			
95	Lead & Antimonial Lead Drosses, Slags, Etc.	3057	DuPont Slag, Dythol, Lead Dross		
72	By-Product Dross	418	Fume & Detin Dross		
10	~~Tinny Drosses, Slags, Etc.~~				
0	Antimony Ore, Slags, Etc.	300			
	Total Materials To Smelt	5236			
	Less Customer's Inventory Included Above				
	Net Company Materials To Smelt				
SECONDARY METALS					
97	Furnace Bullion	1758	BF Metal Buttons & Metal in pots		
100	Scrap Lead & Secondary Pig Lead	88	Krentzman in scrap & in pots and other scrap lead		
100	Secondary Softened Lead	93			
96	Antimonial Lead Scrap & Pig	435	Krentzman Buttons, Beaver Buttons, 1% A/L Pigs		
82	High Antimonial Lead & Arsenical	78			
10	Tinny Metals	11			
	Total Secondary Metals	2463			
RAW METALS					
	Additional	2	Bismuth, Cadmium, Tellurium		
100	Pig Lead	-			
0	Pig Tin	10			
0	Antimony Metal	21			
	Less Customer Inventory				
	Total Raw Metals	33			
MERCHANDISE					
92	Extruded Lead Products				
81	Solders & Babbitt & Type				
96	Antimonial Lead	1189			
0	Zinc Alloys				
96	* Other Lead Products				
	Total Merchandise In Plant				
	Merchandise On Consignment				
	Total Merchandise Inventory				
NET INVENTORY	SIL				

* Rolled Lead, Ingot Lead, Lead Specialties.

B-113-b

Current Net Smelting Charge On Battery Plates Min _____ Max _____

WEEKLY METAL INVENTORY

METAL DIVISION REGION PLANT PERTH AMBOY

NET TONS LEAD CONTENT

	Week Ending	10/31/74			
ATERIAL TO SMELT:					
0	Scrap Whole Batteries	---			
0	Scrap Battery Plates	137	Battery Plates & Tops		
15	B/MF SCRAP	907			
5	Lead & Antimonial Lead Drosses, Slags, Etc.	2,798	DuPont Slag & Lead Dross		
2	By PRODUCT DROSS	253			
0	Tinny Drosses, Slags, Etc.				
0	Antimony Ore, Slags, Etc.	213			
	Total Materials To Smelt	4,308			
	Less Customer's Inventory Included Above				
	Net Company Materials To Smelt	4,308			
CONDARY METALS					
7	Furnace Bullion	2,380	BF Metal - Buttons & in pots		
0	Scrap Lead & Secondary Pig Lead	43	Krentzman in pots & in scrap		
0	Secondary Softened Lead	31			
5	Antimonial Lead Scrap & Pig	332	Krentzman buttons, 1% A/L pigs & buttons from scrap lead		
2	High Antimonial Lead				
0	Arsenical Alloy Tinny Metals	20 9			
	Total Secondary Metals	2,815			
W METALS					
	Additional	2	Bismuth, Cadmium Tellurium		
0	Pig Lead	-			
0	Pig Tin	2			
0	Antimony Metal	11			
	Less Customer Inventory				
	Total Raw Metals	15			
RCHANDISE					
	Extruded Lead Products				
	Solders & Babbitt & Type				
	Antimonial Lead	1,130			
	Zinc Alloys				
	* Other Lead Products				
	Total Merchandise In Plant				
	Merchandise On Consignment				
	Total Merchandise Inventory	1,130			
T ENTORY	SIL	8,268			

* Rolled Lead, Ingot Lead, Lead Specialties.

Current Net Smelting Charge On Battery Plates Min _____ Max _____

PERTH AMBOY PLANT Period 10/19 thru 10/25/74

	OPG INV	PURCHASES	PRODUCTION	USAGE	SHIPMENTS	ENDING INVENTORY	PLANNED USAGE
RNACE MATERIAL							
WHOLE BATTERIES	—						
BATTERY PLATES	196	199		299		96	295
REVERBE SLAG							
FLUE DUST	244		27	86		165	100
PELLETS							
GRID METAL							
DU PONT SLAG	2487					2487	—
AST METAL	2286		758		23	2514	630 (Prod
VERB METAL							
ANTIMONIAL SLAG	283			32	2	255	32
RAP METAL	110						
DYTHOL	—						—
URCHASED DROSS	319			18		301	—
ATTERY MFGS SCRAP	935	245		235		965	235
Y PRODUCT DROSS							—
DETIN DROSS	150						—
NISHED MATERIAL							
ANTIMONIAL LEAD	1137		330		418	1049	480
SOFT LEAD	79		87		60	94	100
SECONDARY METALS	375			58		317	
ALLOYS	34			32			2
XIDES & EXPANDERS							
RIMARY METAL							
LEAD	—					—	
TIN	10				8	2	
ANTIMONY	11			1	3	7	7
OTHER	2					2	

TT: WM. LUX PERTH AMBOY PLANT – PERIOD 10/5/74 THRU 10/11/74

	Opening Inventory	Purchases	Production	Usage	Shipments	Ending Inventory
[illegible] Material						
Whole Batteries	6					6
Battery Plates	700	63		285		478
Reverb Slag						
Flue Dust	240		71	43		268
Pellets						
Drill Metal						
Du Pont Slag	2487					2487
Cast Metal	1650		531			1758
Reverb Metal						
Antimonial Slag	300					300
Grap Metal		40				88
Oxythol	269					269
Purchased Dross	280	21				301
Battery Mfg Scrap		240		163		977
Dry Product Dross			35	35		
DETIN DROSS	149					150
Finished Material						
Antimonial Lead			427	86	339	1189
Soft Lead			44	38	20	93
Secondary Metals			43	80		435
Alloys				52		89
Index Expanders						
Primary Metal						
Lead						
Tin						10
Antimony		20				21
Other						2

PERTH AMBOY INVENTORY DISPOSITION

Product	Inventory	Disposition		Comments
A Finished A/L	1527 Tons	Ship to customers from Perth Amboy -	1527 T.	
B Soft Lead	251 "	" " Altoona	251 T.	
C Primary Metals (Anty & Tin)	15	" " Cleveland	15 T.	
D B.A.L. Buttons	635 "	Transfer to Cleveland Soften at Perth Amboy	300 T. 335 T.	
D Tinny Buttons	714 "	Transfer to Cleveland - 1.5% Sn Transfer to Other Plants	318 T. 396 T.	
Krentzman Buttons	334 "	5% A/L Sold to Federal Alloys	334 T.	
D Secondary Metal	150 "	1% A/L Transfer or Sell	150 T.	
D Alloys	92 "	10-13% A/L & Arsenic Alloys Transfer to Cleveland Transfer to Pedricktown	46 T. 46 T	
D Scrap Lead - Krentzman	190	Melt Down at Perth Amboy Transfer to Pedricktown	100 T. 90	
E Battery Plates - M/C 75%	400 "	Ship to Pedricktown for use in Reverberatory Furnace	400 T.	
E Antimony Slag - 48% Sb 40% Pb	68 "	Ship to Pedricktown " " Cleveland	34 T. 34 T.	
E Batt. Mfg. Scrap	960 "	Ship to Pedricktown " " Cleveland " " Granite City	500 T. 230 T. 230 T.	
E DuPont Slag - 85% Pb	700 "	Cleveland Reverb (Chunks) Sell Outside	350 T. 350 T.	
E Baghouse Dust	200 "	Sell Outside	200 T.	

continued.....

PERTH AMBOY INVENTORY DISPOSITION

Product	Inventory	Disposition	Comments
E Lead Chemicals (Dythol) 10-50% Pb)	100 Tons ✓	Sell Outside - 100 T.	
E Detin. Dross - 85% Mc.	160 " ✓	Sell Outside - 160 T.	
E Purchased Dross - 75% M.C.	485 " ✓	Sell Outside - 485 T.	
New York Inventory			
Zinc	1600 Tons	Ship as required from Perth Amboy (Per J. Finney)	
Babbit	250 "	Ship for Conversion(Per J. Finney)	
Negative Exp. Materials	129	Ship to Bradley	
Coke & Flux Inventory			
Coke	400 Tons	To Pedricktown	
Cast Iron	220 "	To Pedricktown	
Other Flux	25 "	To Pedricktown	

PWM

	Tons	Value	Per lb.
Antimonial Lead	1499	764126	.2789
Soft Lead	261	94714	.1865
Primary Antimony	11.5	62328	2.7358
Primary Tin	1.6	12678	3.7478

Secondary Lots & Metals

BAL Buttons	594	213840	.18
Tinny Buttons	714	316202	.2215
Krentzman Buttons	482	207120	.2149
1% A/L	150	51000	.17
Scrap Lead - Krentzman	42	17327	.24
	1982	805589	

Drosses

Wheeler Batteries & Tops	47	13983	.1475
Battery Plates	372.6	140302	.1883
Remelt Slag	24	5844	.12
Fume Dust	103.8	12046	.058
Dispoint Slag	592	145800	.123
Antimonial Slag	68	94281	.3256
Purchased Dross	347	147360	.2123
Battery Hdg Scrap	960	417149	.2183
By Product Dross	160	71783	.2249
	2674.4	1000554	

Miscellaneous	153	144964	.4748
Negative Cylinder	307	237992	.3319
Oxides	111	6903	.0577
Primary Lead	4087	2007165	.2454
Other Metals		7254	

} [illegible] Phenolic [illegible], Etc.

Other Metals

434	Lbs	Tellurium	$2387
956	"	Bismuth	$573
380	"	Cadmium	1294

Miscellaneous Metals

3 Tons	40%	A/L	$118,200
54 Tons	13%	A/L	
50 Tons	9%	Arsenical AL	

116 Tons	Zinc Alloy Ingot Lead Solder Fluxes	$26,764

Perth Amboy Inventory 1/27/75

	Tons	Value	Per Lb.
X Antimonial Lead	1599	764126	.2389
Soft Lead	261	.97714	.1865
Primary Antimony	11.5	.62828	2.7358
Primary Tin	1.6	.12678	3.7498

Secondary Lots & Metals

BAL Buttons	544	.213840	.18
Tinny Buttons	714	.316302	.2215
Krentzman Buttons	482	.207120	.2149
1% A/L	150	.51000	.17
Scrap Lead - Krentzman	42	.17327	.21
	1982	805589	

Drosses

Whole Batteries & Tops	47	.13983	.1475
Battery Plates	372.6	.140302	.1883
Reverb Slag	24	.5844	.12
Fume Dust	103.8	.12046	.058
Dupont Slag	592	.145600	.123
Antimonial Slag	68	.44287	.3256
Purchased Dross	347	.147360	.2123
Battery Mfg Scrap	960	.419149	.2183
By Product Dross	160	.71983	.2249
	2674.4	1000554	

Miscellaneous	153	.144964	.4748
X Negative Expander	359	737992	.3319
X Oxides	111	56907	.2557
X Primary Lead	4089	2007155	.2454
Other Metals		.9254	

} at Bradbury, Philadelphia, etc.

Other Metals

434	Lbs	Tellurium	$2387
956	"	Bismuth	$573
380	"	Cadmium	1294

Miscellaneous Metals

3 Tons	40%	A/L	$118,200
54 Tons	13%	A/L	
50 Tons	9%	Arsenical AL	

46 Tons	Zinc Alloy Ingot Lead Solders Fluxes	$26,764

Park Anbay - M&S Inventory

Coke	384 Tons	34457
Cast Iron	172 Tons	22754
Other Flux	20" "	31036
Fuel Oil		47508
Kettles		3131
		138886

Perth Amboy Inventory 1/27/75

	Tons	Value	Per Lb.	Tons	$
Antimonial Lead ✓	1599	764126 ✓	.2389	993	474445 —
Soft Lead ✓	261	97714 ✓	.1865	261	97353 —
✓ Primary Antimony ✓	11.5	62828	2.7358	—	
✓ Primary Tin ✓	1.6	12678	3.7498	2	7500 —
	1873.1	937346 —			
Secondary Lots & Metals					
BAL Buttons ✓	594	213840	.18	405	162000 —
Tinny Buttons ✓	714	316302	.2215		
Krentzman Buttons ✓	482	207120	.2149	482	207163 —
1% A/L ✓	150	51000	.17	60	20400 —
Scrap Lead - Krentzman ✓	42	17327	.21	42	17640 —
	1982	805589			
Drosses					
Whole Batteries & Tops ✓	47	13983	.1475	47	13865 —
Battery Plates ✓	372.6	140302	.1883	168	63268 —
Reverb Slag ✓	24	5844	.12	24	6000 —
Fume Dust ✓	103.8	12046	.058	104	12046 —
DuPont Slag ✓	592	145600	.123	592	145600 —
Antimonial Slag ✓	68	44287	.3256	54	35165 —
Purchased Dross ✓	347	147360	.2123	330	140118 —
Battery Mfg Scrap ✓	960	419149	.2183	335	146261 —
By Product Dross DETIN ✓	160	71983	.2249	160	71983 —
	2674.4	1000554		S/Bse 1,001,217	
Miscellaneous SECD'Y	153	~~144964~~	.4748	63	59825 —
Negative Expander	~~359~~	~~237992~~	.3319	4122	168063 ✓
Oxides	~~111~~	~~56909~~	.2557		
Primary Lead	~~4089~~	~~2007155~~	.2454		
Other Metals		9254			
	6682	2888453 —			

Inventory summary doesn't foot & cross foot

PERTH AMBOY INVENTORY - 4/27/75

TO CLIFF STRAGE

DROSSES:	WGT	$	UNIT	
Whole Batteries & Tires	94779	13983	.1475	*
Battery Plates	745288	140302	.1883	
Reverb Slag	48705	5844	.12	*
Fume Dust	207610	12046	.058	
Dupont Slag	1184000	145600	.123	
Antimonial Slag	136000	44287	.3256	
Purchased Dross	694002	147360	.2123	
Battery Mfg. Scrap	1920100	419149	.2183	
By Product Dross	320000	71983	.2249	
	5350484	1000554	.187	
‡ Secondary Metals	2336076	476402	.2039	
~~Secondary Lots~~	~~1626596~~	~~329187~~	~~.2024~~	
	3962672	805589	.2033	
Bal Buttons	1188000	213840	.18	
Tinny Buttons	1428000	316302	.2215	
Kreutzman Buttons	964000	207120	.2149	
1% Al	200000	61000	.17	
Scarplead Kremer	14000	17327	.21	
	3764000	805589	.2032	

‡ MUCH OF THE SECONDARY METALS SHOULD BE CLASSIFIED AS SECONDARY LOTS. MANY SECONDARY LOTS WERE INCLUDED IN BLAST METAL FIGURES FROM PERTH

* NOT ON INVENTORY DISPOSITION [illegible]

NATIONAL 45-605 EYE-EASE

DATE ? 12/31/74

	CODE		1 R. GLATZ SUMMARY TONS	2 $	3 CENTRAL SUMMARY TONS	4 $	5 DIFF PHY (SHORT) TONS	5 DIFF PHY (SHORT) $	
1	A.	ANTIMONIAL LEAD	1527	722103-	1949	921663-	(422)	(199560-)	1
2									2
3									3
4	B	SOFT LEAD	251	93632-	263	98108-	(12)	(4476-)	4
5									5
6									6
7	C	PRIMARY Sb, SN	15	73644-	15	73644-	-	-	7
8									8
9									9
10	D	BAL BUTTONS	635	223266-	638	224320-	(3)	(1054-)	10
11		TINNY BUTTONS	714	326012-	714	326012-	-	-	11
12		KRENTZMAN BUTTONS	334	140280-	437	183540-	(103)	(43260-)	12
13		SECO'Y METAL	150	51000-	150	51000-	-	-	13
14		SECO'Y ALLOY	92	98237-	86	91978-	6	(6259-)	14
15		SCRAP LEAD	190	72200-	300	114000-	(110)	(41800-)	15
16		TOTAL SECO'Y	2115	910995-	2325	990850-	(210)	(79855-)	16
17									17
18	E	BATTERY PLATES	300	118800-	103	40674-	197	78126-	18
19		ANTIMONY SLAG	60	38472-	56	35907-	4	2565-	19
20		BATT. MFG. SCRAP	768	346214-	975	439530-	(207)	(93316-)	20
21		DUPONT Pb SLAG	560	137760-	592	145632-	(32)	(7872-)	21
22		FLUE DUST	140	16240-	25	2900-	115	13340-	22
23		LEAD CHEMICALS (CD)	50	—	—	—	50	—	23
24		DETIN DROSS +	136	61173-	160	71968-	(24)	(10795-)	24
25		PURCHASED DROSS	364	154554-	347	147336-	17	7218-	25
26		WHOLEBATT + TOPS	—	—	38	10655-	(38)	(10655-)	26
27		REVERB SLAG	—	—	24	5760-	(24)	(5760-)	27
28		TOTAL FCE FEED	2378	873213-	2320	900362-	58	(27149-)	28
29									29
30		TOTAL	6286	2673587-	6872	2984627-	(586)	(311040-)	30
31									31
32									32
33									33
34									34
35									35
36									36
37									37
38									38
39									39
40									40

PERTH AMOY INVENTORY

ATT: R. SCHOLZ

	PER R. GLATZ INVENTORY	UNIT VALUE	PER 12/31/79 INVENTORY		
ANTY PB	1527	.2366	1949	921877	
SOFT PB	251	.1865	263	98099	
PRIMARY METALS	15	2345 Sb 378 Sn	13 Sb 2 Sn	60970 15060	
BAL BUTTONS	635	.1758	638	~~223870~~	224320
TINNY BUTTONS	714	.2283	714	~~312444~~	326012
KRENTZMAN BUTTONS	334	.21	437	183540	
SECONDARY METAL 190 A/L	150	.17	150	51000	
ALLOYS	72	.4846 .5339	86	83351	
SCRAP LEAD	190	.1900	300	114000	~~973145~~ 982223
BATTERY PLATES	400	.145 .198	103	~~29870~~	40788
ANTY SLAG	68	.24 .3206	56	26880	35907
BATTY MFG SCRAP	960	.169 .2254	975	160550	439530
DUPONT SLAG 3073 x.75	700	.091 .123	592	98644	145632
BAGHOUSE DUST 2305	200	.04 .058	25	7840	2900
DYTHOL	100	NV	—	—	—
DETIN DROSS	160	.169 .2249	160	54090	71968
PURCHASED DROSS	425	.159 .2123	347	131166	147336
			1881	~~508130~~ 509030	10655
			38		5760
			24		900476

W/BTTOS .1402
RUB SLAG .12

2578121

321660

INVENTORY TRANSFER

	Initials	Date
Prepared By		
Approved By		

	1	2	3
	UNIT PRICE	METAL WEIGHT	VALUE
SECONDARIES:			
BAL BUTTONS	.18	1188000	213840
TINNY BUTTONS	.2215	1428000	316302
KRONTZMAN BUTTONS	.2149	964000	207126
1% Anty Lead	.17	300000	51000
KRONTZMAN SCRAP LEAD	.21	84000	17327
		3964000	805585
DROSSES:			
WHOLE BATTERIES & TOPS	.1475	94779	13983
BATTERY PLATES	.1883	745288	140302
REVERB SLAG	.12	48705	5844
FLUEDUST	.058	207610	12046
DUPONT SLAG	.123	1184000	145600
ANTIMONIAL SLAG	.3256	136000	44287
PURCHASED DROSSES	.2123	694002	147360
BATTERY MANUFACTURERS SCRAP	.2183	1920100	419149
BY PRODUCT DROSS DETIN	.2249	320000	71983
		5350484	1000554
RAW METALS:			
ANTIMONY	27358	22965	62828
TIN	37498	3361	12678
BISMUTH	58395	1956	5573
TELLURIUM	55000	434	2387
CADMIUM	34053	380	1294
		28116	84760
MISCELLANEOUS:			
SOFT LEAD		523917	97714
40% Anty Pb		6000	
13% Anty Pb		108000	118200
9% Arsenical Pb		100000	
Zinc Alloy, Ingot Lead, Solders		92000	26764
		859917	242678
		827917	
TOTAL		10202517	2133551
		10173517	

INVENTORY STATUS REPORT

(Metal Weight Contained) as of 10/4 Plant Port Arthur

	1 Opening Inventory	2 Purchases	3 Production	4 Usage	5 Adjustments	5 Shipments	6 Ending Inventory	7 Purchases	8 Production	9 Consumption or Sale	10 Projected Ending Inventory
Furnace Material											
Whole Batteries	22				<16>		6				
Battery Plates	700	115		309	16		522				
Reverb Slag	72						72				
Flue Dust	140		43	15			168				
Pellets											
Grid Material											
DUPONT SLAG	2929				<442>		2487				
Blast Metal	1286		443	443	425		1211				
Reverb Metal											
ANTIMONIAL SLAG	335				<35>		300				
Scrap Metal	1286	54			<497>	134	709				
DYTHAL	527				<258>		269				
Purchased Dross	362			80			282				
Battery Mfg. Scrap	684	226		80			830				
By-Product Dross	255	32		68			219				
Finished Material											
Antimonial Lead	17000		1550			4006	14444				
Soft Lead	203				<62>	21	120				
Secondary Metals	10		35				45				
Alloys	89						89				
Oxides and Expanders											
Primary Metal											
Lead											
Tin	5				5		10				
Antimony	12				<11>		1				
Other											
Lead Conversion Material	<258>						<258>				

INVENTORY STATUS REPORT

(Metal Weight Contained) as of 10/11 Plant Perth Amboy

	1 Opening Inventory	2 Purchases	3 Production	4 Usage	5 Shipments	6 Ending Inventory	7 Purchases	8 Production	9 Consumption or Sale	10 Projected Ending Inventory
rnace Material										
Whole Batteries	6					6				
Battery Plates	522	14		268		268				
Reverb Slag	72					72				
Flue Dust	128		81	51		198				
Pellets										
Grid Material										
DuPont Slag	2487					2487				
last Metal	1711		531	531		1711				
verb Metal										
Antimonim Slag	300					300				
rap Metal	293	41		44		290				
Dytinol	269					269				
rchased Dross	242	22		152		152				
ttery Mfg. Scrap	830	290		141		979				
-Product Dross	219					219				
nished Material										
Antimonial Lead	1444		417		339	1522				
Soft Lead	120					120				
Secondary Metals	523		86	44	20	545				
Alloys	88				11	77				
ides and Expanders										
imary Metal										
Lead										
Tin	10					10				
Antimony	1	20				21				
Other										
on Conversion Material	<700>					<700>				

INVENTORY STATUS REPORT

(Metal Weight Contained) as of 10/11 Plant Perth Amboy

	1 Opening Inventory	2 Purchases	3 Production	4 Usage	5 Shipments	6 Ending Inventory	7 Purchases	8 Production	9 Consumption or Sale	10 Projected Ending Inventory
Furnace Material										
Whole Batteries	6					6				
Battery Plates	522	14		268		268				
Reverb. Slag	72					72				
Flue Dust	168		81	51		198				
Pellets										
Grid Material										
DuPont Slag	2487					2487				
Blast Metal	1711		531	531		1711				
Reverb Metal										
Antimonial Slag	300					300				
Scrap Metal	293	41		44		290				
Dytinol	269					269				
Purchased Dross	282	22		152		152				
Battery Mfg. Scrap	830	290		141		979				
By-Product Dross	219					219				
Finished Material										
Antimonial Lead	1444		417		339	1522				
Soft Lead	120					120				
Secondary Metals	523		86	44	20	545				
Alloys	88				11	77				
Oxides and Expanders										
Primary Metal										
Lead										
Tin	10					10				
Antimony	1	20				21				
Other										
Less Conversion Material	<258>					<258>				

INVENTORY STATUS REPORT

(Metal Weight Contained) as of 1/18 Plant Perth Amboy

	Opening Inventory	Purchases	Production	Usage	Shipments	Ending Inventory	Purchases	Production	Consumption Sale	Projected Ending Inventory
	1	2	3	4	5	6	7	8	9	10
Furnace Material										
Whole Batteries	6			6		-0-				
Battery Plates	341			273		68			252	
Reverb Slag	72			72		-0-				
Flue Dust	41		134	75		102		50	102	
Pellets										
Grid Material										
DUPONT SLAG	2487					2487				
Blast Metal	1660		931	350	107	2140		600	600	
Reverb Metal										
ANTIMONIAL SLAG	214			33		181			27	
Scrap Metal	460			391		69			69	
Purchased Dross	152	186				338				
Battery Mfg. Scrap	728	302		5		1025			179	
By-Product Dross	19		50	119		-0-		50	50	
DETIN DROSS	152		2			154		4		
Finished Material										
Antimonial Lead	1566		350		890	1026		500		
Soft Lead	43		7			50		100		
Secondary Metals	353			54		299		69		
Alloys	75			39		36			15	
Oxides and Expanders										
Primary Metal										
Lead										
Tin	2					2				
Antimony	16			11		5			5	
Other		1				1				
Less Conversion Material	<1192>					<1192>				

INVENTORY STATUS REPORT

(Metal Weight Contained) as of 11/8 Plant Perth Amboy

	Opening Inventory	Purchases	Production	Usage	Shipments	Ending Inventory	Purchases	Production	Consumption or Sale	Projected Ending Inventory
Furnace Material										
Whole Batteries	6			6		-0-				
Battery Plates	341			273		68				
Reverb Slag	72			72		-0-				
Flue Dust	41		136	75		102				
Pellets										
Grid Material										
Ducant Slag	[illegible]					2487				
Blast Metal	1666		931	350	107	2140				
Reverb Metal										
Antimonial Slag	214			33		181				
Scrap Metal	460			391		69				
Purchased Dross	152	186				338				
Battery Mfg. Scrap	728	302		5		1025				
By-Product Dross	69		50	119		-0-				
Detin Dross	152		2			154				
Finished Material										
Antimonial Lead	1566		350		890	1026				
Soft Lead	43		7			50				
Secondary Metals	353			54		299				
Alloys	75			39		36				
Oxides and Expanders										
Primary Metal										
Lead										
Tin	2					2				
Antimony	16			11		5				
Other		1				1				
Less Conversion Material	<1192>					<1192>				
	7251	489	1476	1428	997	6791				

INVENTORY STATUS REPORT

(Metal Weight Contained) as of 11/15 Plant Perth Amboy

	Opening Inventory	Purchases	Production	Usage	Shipments	Ending Inventory	Purchases	Production	Consumption ~~on Hand~~	Projected Inventory
Furnace Material										
Whole Batteries										
Battery Plates	468	210		222		456			237	
Reverb. Slag										
Flue Dust	102		64	105		61		57	100	
Pellets										
Grid Material										
DuPont Slag	2487					2487				
Blast Metal	2440		576	576	234	1906		588	588	
Reverb. Metal										
Antimonial Slag	181			22		159			20	
Scrap Metal	69	60		29		100			49	
Purchased Dross	338					338				
Battery Mfg. Scrap	1025	200		176		1049			178	
By-Product Dross								50	50	
Depth Dross	154					154				
Finished Material										
Antimonial Lead	1026		480		536	970		490		
Soft Lead	50					50		50		
Secondary Metals	299		40			338		50		
Alloys	30					30			7	
Oxides and Expanders										
Primary Metal										
Lead 9538										
Tin 2205	2					2				
Antimony 1543	5					5				
Other	1					1				
Less Conversion Material	<1192>					<1192>				
	6791	470	1160	1138	770	6521		1285	1229	

INVENTORY STATUS REPORT

(Metal Weight Contained) as of 11/82 Plant Perth Amboy

	1 Opening Inventory	2 Purchases	3 Production	4 Usage	5 Shipments	6 Ending Inventory	7 Purchases	8 Production	9 Consumption or Sale	10 Projected Inventory
Furnace Material										
Whole Batteries										
Battery Plates	54	310		212	22	132				
Reverb Slag										
Flue Dust	41		32	89		4				
Pellets										
Grid Material										
DuPont Slag	2487					2487				
Blast Metal	1906		543	465	436	1548				
Reverb Metal										
Antimonial Scrap	159					159				
Scrap Metal	100	19				119				
Purchased Dross	338					338				
Battery Mfg. Scrap	1049	175		150		1024				
By-Product Dross	154					154				
Finished Material										
Antimonial Lead	900		465		344	1021				
Soft Lead	50		131		169	12				
Secondary Metals	332				54	285				
Alloys	34	44				82				
Oxides and Expanders										
Primary Metal										
Lead										
Tin	2					2				
Antimony	5			2.5		2.5				
Other	1					1				
Loss Conversion Material	1192					1192				

STRAIGHT BILL OF LADING — SHORT FORM — ORIGINAL — Not Negotiable

RECEIVED, subject to the classifications and tariffs in effect on the date of the issue of this Bill of Lading,

Rec'd $ to apply in prepayment of the charges on the property described herein.

Agent or Cashier

PER

(The signature here acknowledges only the amount prepaid.)

Charges advanced $

Subject to Section 7 of conditions of applicable bill of lading, if this shipment is to be delivered to the consignee without recourse on the consignor, the consignor shall sign the following statement:

The carrier shall not make delivery of this shipment without payment of freight and all other lawful charges.

N L INDUSTRIES, INC.

(Signature of Consignor)

FROM: N L INDUSTRIES, INC.

SHIPPERS NO. K-550

AT: BAR - PA 4/18/75 197

IF CHARGES ARE TO BE PREPAID WRITE OR STAMP HERE "TO BE PREPAID"

NAME OF CARRIER

CARRIER'S NO.

CAR OR VEHICLE NO.

The property described below in apparent good order except as noted (contents and condition of contents of packages unknown) marked consigned and destined as indicated below which said carrier (the word carrier being understood throughout this contract as meaning any person or corporation in possession of the property under the contract) agrees to carry to its usual place of delivery at said destination if on its route otherwise to deliver to another carrier on the route to said destination. It is mutually agreed as to each carrier of all or any of said property over all or any portion of said route to destination and as to each party at any time interested in all or any of said property that every service to be performed hereunder shall be subject to all the terms and conditions of the Uniform Domestic Straight Bill of Lading set forth (1) in Uniform Freight Classification in effect on the date hereof, if this is a rail or a rail water shipment or (2) in the applicable motor carrier classification or tariff if this is a motor carrier shipment.

Shipper hereby certifies that he is familiar with all the terms and conditions of the said bill of lading including those on the back thereof, set forth in the classification or tariff which governs the transportation of this shipment and the said terms and conditions are hereby agreed to by the shipper and accepted for himself and his assigns.

CONSIGNED TO AND DESTINATION

NL INDS., INC.
PEDRICKTOWN, N.J.

PPD/COL G

DELIVERING CARRIER

CUSTOMER'S ORDER NO. - REQ. NO.

TRK. NO. ROUTING

LEE'S TRUCKING

SHIPPING - TRUCKER INSTRUCTIONS

NO. PKGS.	KIND OF PACKAGE, DESCRIPTION OF ARTICLES, SPECIAL MARKS, AND EXCEPTIONS	* WEIGHT (SUB. TO COR.)	CLASS OR RATE	✓	NO. PKGS.	KIND OF PACKAGE, DESCRIPTION OF ARTICLES, SPECIAL MARKS, AND EXCEPTIONS	* WEIGHT (SUB. TO COR.)	CLASS OR RATE	✓
	PIPE, LEAD 01					LEAD CASTING AS FROM THE MOLD 16			
	PIPE, BLOCK TIN					FLANGES, ROOF, LEAD NSTD			
	LEAD GLAZIERS					FLANGES, ROOF, LEAD NOT NSTD			
	LEAD BAR					LEAD SHEET 18			
	LEAD, SHEET 02					TIN SHEET (NOT TIN PLATE)			
	PIPE FITTINGS LEAD 04					SHEETS, BRITANNIA METAL			
	SOLDER TIN CONTENT EXCEEDING 10% 06					LEAD BASE ALLOY			
	SOLDER TIN CONTENT NOT EXCEEDING 10%					LEAD SHOT 20			
	SOLDER TIN CONTENT EXCEEDING 10% 08					LEAD, PIG 22			
	SOLDER TIN CONTENT NOT EXCEEDING 10%					TIN, BLOCK			
	SOLDER TIN CONTENT EXCEEDING 10% 10					ANTIMONY METAL			
	TIN, BLOCK					ZINC (SPELTER) PIGS OR SLABS			
	SOLDER, TIN CONTENT NOT EXC. 10% BARS PIGS SLABS					ZINC ALLOY PIGS OR SLABS 24			
	BABBITT METAL 11					LEAD, PIG 72			
	LEAD BASE ALLOY BARS PIGS SLABS					LEAD CASTINGS AS FROM THE MOLD 74			
	STEEL DRUMS SECOND HAND RETURNED					LEAD CASTINGS NOIBN			
	TYPE METAL (NOT METAL TYPE) TIN CONTENT NOT EXC. 10% 12					FLANGES, ROOF, LEAD NSTD			
	ANTIMONIAL LEAD PIGS OR SLABS 13					FLANGES, ROOF, LEAD NOT NSTD			
	LEAD BAR BLOCK OR INGOT 14					BOLT SHIELDS, EXPANSION METAL 76			
	WASHERS OR GASKETS LEAD 16					SOLDERING FLUX LIQUID 78			
	LEAD BLOCKS					SOLDERING FLUX OTHER THAN LIQUID			
	LEAD WOOL								
	LEAD CASTINGS, NOIBN								

*If the shipment moves between two ports by a carrier by water, the law requires that the bill of lading shall state whether it is "carrier's or shipper's weight."

NOTE — Where the rate is dependent on value, shippers are required to state specifically in writing the agreed or declared value of the property.

The agreed or declared value of the property is hereby specifically stated by the shipper to be not exceeding

per

This shipment is correctly described. Correct Weight is _____ lbs. Subject to Verification by the EASTERN OR WESTERN WEIGHING and INSPECTION BUREAU.

According to Agreement

N L INDUSTRIES, INC. Shipper

COLLECT ON DELIVERY

$

AND REMIT TO:
N L INDUSTRIES, INC.
P.O. BOX 831
PERTH AMBOY, N.J. 08862

C.O.D. CHARGE TO BE PAID BY
☐ SHIPPER
☐ CONSIGNEE

NUMBER PACKAGES	KIND OF PKGE., DESCRIPTION OF ARTICLES, SPL. MKS. & EXCPT.	DEPT. NO.	*WEIGHT (SUB. TO COR.)	CL OR RATE	✓
1	T/L DUPONT SLAG Richard Clime				
	TOTAL PKGS.	TOTAL WEIGHT	40940#		

N L INDUSTRIES, INC.
METAL DIV. EASTERN REGION Shipper,

Per

Permanent Post-office Address of Shipper,
P.O. BOX 831-PERTH AMBOY, N.J. 08862

Agent Per

PRINTED BY THE STANDARD REGISTER COMPANY U.S.A. STANSET ®

NL INDUSTRIES METAL DIVISION

Tel. 212/732-9400

INVOICE

INVOICE DATE 4/29/75

INVOICE NO. MP PA-41

SOLD TO: NORTHEAST REGION (CONTINUED)

SHIPPED TO: PEDRICKTOWN

SHIPPED FROM	FREIGHT PPD	FREIGHT COL.	ENCLOSURES B/L	WT.CTF	ASSAY	TALLY	OUR ORDER NO.-LETTER TO	CUST. ORDER NO.	TERMS
PERTH AMBOY							S-1021-DS		

COMMODITY → DU PONT SLAG

PLEASE REMIT TO: NL INDUSTRIES, INC. • METAL DIVISION P.O. BOX 96495 • CHICAGO, ILL. 60693

CAR NO.	DATE SHIPPED	NO.PIECES	WEIGHT	PRICE	EXTENSION	AMOUNT
M-5612	4/21		40,300			
M-5613	4/22		39,900			
M-5599	4/21		39,240			
M-5601	4/21		39,540			
M-5596	4/21		38,400			
M-5598	4/21		38,820			
M-5600	4/21		44,300			
M-5602	4/21		38,040			
M-5603	4/21		44,620			
M-5604	4/21		45,280			
M-5605	4/21		43,640			
			1,322,360	4.00		52,894.40

X 80

1057888

FORM EO-345 C

ACCOUNTING FILE COPY

PRICING RECORD COPY

N L INDUSTRIES, INC. METAL DIVISION EASTERN REGION

CARD CODE	DEPT.	SALES CLASS	C/A	R/N	QTY. OR WEIGHT	PRICE PER UNIT	AMOUNT	DESCRIPTION	MISC. CHARGES
MS									
MS									
MS									

ORDER NO.	SHIPPED FROM	F.O.B.		DATE SHIPPED ▶
H-5592	S&H - PA	PA		4/18/75

SHIP PT.	CUSTOMER NO.	TYPE	STATE	COUNTY	CITY	TAX	TERR.	SLM.	DATE ENTERED	SCHED. SHIP DATE	CAR OR VEHICLE NO.

SOLD TO:

NL INDS., INC.
PEDRICKTOWN, N.J.

SHIP TO:

NL INDS., INC.
PEDRICKTOWN, N.J.

EXEMPTION NUMBER:

PPD/COL	B/L	B. INST	COPIES	FREIGHT - A, NA, EW	CUSTOMER ORDER NO. – REQ. NO.	TERMS
C						

TRK NO.	ROUTE & DELIVERING CARRIER	SHIPPING - TRUCKER INST.
	LEE'S TRUCKING	

LINE CODE	QTY. ORDERED	ITEM DESCRIPTION	QTY. SHIPPED	PRICE PER UNIT	STAT. QUANTITY
	1 T/L	DUPONT SLAG	42560#		
			X 80		
			34048		
		Gross Wt - 42560#	WE		

SPECIAL INSTRUCTIONS:

CREDIT TERMS LEGEND:

(01) 2/10th PROX, N/30
(04) 2/10, N/30
(06) 2/10th PROX, N/25th PROX
(07) 1/10, N/30
(10) ½/10, N/30
(11) NET CASH
(12) N/10
(13) N/30
(15) N/10th PROX
(17) N/20th PROX

PRINTED BY THE STANDARD REGISTER COMPANY U.S.A. STANSET ®

PRICING RECORD COPY

N L INDUSTRIES, INC. METAL DIVISION EASTERN REGION

CARD CODE	DEPT.	SALES CLASS	C/A	R/N	QTY. OR WEIGHT	PRICE PER UNIT	AMOUNT	DESCRIPTION	MISC. CHARGES
M5									
M5									
M5									

ORDER NO.	SHIPPED FROM	F.O.B.		DATE SHIPPED
K-5584	S&R - PA	PA		4/18/75

SHIP PT.	CUSTOMER NO.	TYPE	STATE	COUNTY	CITY	TAX	TERR.	SLM.	DATE ENTERED	SCHED. SHIP DATE	CAR OR VEHICLE NO.

SOLD TO:

NL INDS., INC.
PEDRICKTOWN, N.J.

SHIP TO:

NL INDS., INC.
PEDRICKTOWN, N.J.

EXEMPTION NUMBER:

PPD/COL	B/L	B. INST	COPIES	FREIGHT - A, NA, EW	CUSTOMER ORDER NO. – REQ. NO.	TERMS
C						

TRK NO.	ROUTE & DELIVERING CARRIER	SHIPPING - TRUCKER INST.
	LEE'S TRUCKING	

LINE CODE	QTY. ORDERED	ITEM DESCRIPTION	QTY. SHIPPED	PRICE PER UNIT	STAT. QUANTITY
	1 C/L	DUPONT SLAG	40940#		
			X PO 32752		
		Gross Wt - 40940#	NE		

SPECIAL INSTRUCTIONS:

CREDIT TERMS LEGEND:

(01) 2/10th PROX, N/30	(11) NET CASH
(04) 2/10, N/30	(12) N/10
(06) 2/10th PROX, N/25th PROX	(13) N/30
(07) 1/10, N/30	(15) N/10th PROX
(10) ½/10, N/30	(17) N/20th PROX

PRICING RECORD COPY

NL INDUSTRIES, INC. METAL DIVISION EASTERN REGION

CARD CODE	DEPT.	SALES CLASS	C/A	R/N	QTY. OR WEIGHT	PRICE PER UNIT	AMOUNT	DESCRIPTION	MISC. CHARGES
M5									
M5									
M5									

ORDER NO.	SHIPPED FROM	F.O.B.		DATE SHIPPED ▶
N-5581	S&R - PA	PA		4/28/75

SHIP PT.	CUSTOMER NO.	TYPE	STATE	COUNTY	CITY	TAX	TERR.	SLM.	DATE ENTERED	SCHED. SHIP DATE	CAR OR VEHICLE NO.

SOLD TO:

NL INDS., INC.
PEDRICKTOWN, N.J.

SHIP TO:

NL INDS., INC.
PEDRICKTOWN, N.J.

EXEMPTION NUMBER:

PPD/COL	B/L	B. INST	COPIES	FREIGHT - A, NA, EW	CUSTOMER ORDER NO. - REQ. NO.	TERMS
C						

TRK. NO.	ROUTE & DELIVERING CARRIER	SHIPPING - TRUCKER INST.
	LEE'S TRUCKING	

LINE CODE	QTY. ORDERED	ITEM DESCRIPTION	QTY. SHIPPED	PRICE PER UNIT	STAT. QUANTITY
	1 T/L	DUPONT SLAG	43040#		
			X 80		
			34432		
		Gross Wt - 43040#	NE		

TRUCTIONS:

CREDIT TERMS LEGEND:

(01) 2/10th PROX, N/30	(11) NET CASH
(04) 2/10, N/30	(12) N/10
(06) 2/10th PROX, N/25th PROX	(13) N/30
(07) 1/10, N/30	(15) N/10th PROX
(10) ½/10, N/30	(17) N/20th PROX

PRINTED BY THE STANDARD REGISTER COMPANY U.S.A. STAMSET ®

PRICING RECORD COPY

NL INDUSTRIES, INC. METAL DIVISION EASTERN REGION

CARG CODE	DEPT.	SALES CLASS	C/A	R/N	QTY. OR WEIGHT	PRICE PER UNIT	AMOUNT	DESCRIPTION	MISC. CHARGES
M5									
M5									
M5									

ORDER NO.	SHIPPED FROM	F.O.B.		DATE SHIPPED ▶
M-5580	SAR - PA	PA		4/18/75

SHIP PT.	CUSTOMER NO.	TYPE	STATE	COUNTY	CITY	TAX	TERR.	SLM.	DATE ENTERED	SCHED. SHIP DATE	CAR OR VEHICLE NO.

SOLD TO: NL INDS., INC.
PEDRICKTOWN, N.J.

SHIP TO: NL INDS., INC.
PEDRICKTOWN, N.J.

EXEMPTION NUMBER:

PPD/COL	B/L	B. INST	COPIES	FREIGHT - A, NA, EW	CUSTOMER ORDER NO. - REQ. NO.	TERMS
C						

TRK NO.	ROUTE & DELIVERING CARRIER	SHIPPING - TRUCKER INST.
	LEE'S TRUCKING	

LINE CODE	QTY. ORDERED	ITEM DESCRIPTION	QTY. SHIPPED	PRICE PER UNIT	STAT. QUANTITY
	1 T/L	DUPONT SLAG	44700#		
			X 80		
			35760		
		Gross Wt - 44700#	WE		

SPECIAL INSTRUCTIONS:

CREDIT TERMS LEGEND:

(01) 2/10th PROX, N/30	(11) NET CASH
(04) 2/10, N/30	(12) N/10
(06) 2/10th PROX, N/25th PROX	(13) N/30
(07) 1/10, N/30	(15) N/10th PROX
(10) ½/10, N/30	(17) N/20th PROX

PRINTED BY THE STANDARD REGISTER COMPANY U.S.A. STANSET ®

PRICING RECORD COPY

N.L. INDUSTRIES, INC. METAL DIVISION EASTERN REGION

CARD CODE	DEPT.	SALES CLASS	C/A	R/N	QTY. OR WEIGHT	PRICE PER UNIT	AMOUNT	DESCRIPTION	MISC. CHARGES
M5									
M5									
M5									

ORDER NO.	SHIPPED FROM	F.O.B.	DATE SHIPPED
R-5579	S&R → PA	PA	4/18/75

SHIP PT.	CUSTOMER NO.	TYPE	STATE	COUNTY	CITY	TAX	TERR.	SLM.	DATE ENTERED	SCHED. SHIP DATE	CAR OR VEHICLE NO.

SOLD TO:

NL INDS., INC.
PEDRICKTOWN, N.J.

SHIP TO:

NL INDS., INC.
PEDRICKTOWN, N.J.

EXEMPTION NUMBER:

PRO/COL	B/L	B. INST	COPIES	FREIGHT - A, NA, EW	CUSTOMER ORDER NO. – REQ. NO.	TERMS
G						

TRK NO.	ROUTE & DELIVERING CARRIER	SHIPPING - TRUCKER INST.
	LEE'S TRUCKING	

LINE CODE	QTY. ORDERED	ITEM DESCRIPTION	QTY. SHIPPED	PRICE PER UNIT	STAT. QUANTITY
	1 T/L	DUPONT SLAG	43020#		
			X 80		
			34416		
		Gross Wt → 43020#	WE		

SPECIAL INSTRUCTIONS:

CREDIT TERMS LEGEND:

(01) 2/10th PROX, N/30	(11) NET CASH
(04) 2/10, N/30	(12) N/10
(06) 2/10th PROX, N/25th PROX	(13) N/30
(07) 1/10, N/30	(15) N/10th PROX
(10) ½/10, N/30	(17) N/20th PROX

PRINTED BY THE STANDARD REGISTER COMPANY U.S.A. STANSET ®

PRICING RECORD COPY

NL INDUSTRIES, INC. METAL DIVISION EASTERN REGION

CARD CODE	DEPT.	SALES CLASS	C/A	R/N	QTY. OR WEIGHT	PRICE PER UNIT	AMOUNT	DESCRIPTION	MISC. CHARGES
M5									
M5									
M5									

ORDER NO.	SHIPPED FROM	F.O.B.		DATE SHIPPED
M-5578	SSR - PA.	PA		4/10/73

SHIP PT.	CUSTOMER NO.	TYPE	STATE	COUNTY	CITY	TAX	TERR.	SLM.	DATE ENTERED	SCHED. SHIP DATE	CAR OR VEHICLE NO.

SOLD TO:

NL INDS., INC.
PEDRICKTOWN, N.J.

SHIP TO:

NL INDS., INC.
PEDRICKTOWN, N.J.

EXEMPTION NUMBER:

PPD/COL	B/L	B. INST	COPIES	FREIGHT - A, NA, EW	CUSTOMER ORDER NO. – REQ. NO.	TERMS
C						

TRK NO.	ROUTE & DELIVERING CARRIER	SHIPPING - TRUCKER INST.
	LER'S TRUCKING	

LINE CODE	QTY. ORDERED	ITEM DESCRIPTION	QTY. SHIPPED	PRICE PER UNIT	STAT. QUANTITY
	1 T/L	DUPONT SLAG	29020#		
			X 80 / 23216		
		Gross Wt - 29020#	WE		

SPECIAL INSTRUCTIONS:

CREDIT TERMS LEGEND:

(01) 2/10th PROX, N/30	(11) NET CASH
(04) 2/10, N/30	(12) N/10
(06) 2/10th PROX, N/25th PROX	(13) N/30
(07) 1/10, N/30	(15) N/10th PROX
(10) ½/10, N/30	(17) N/20th PROX

PRINTED BY THE STANDARD REGISTER COMPANY U.S.A. STANSET ®

PRICING RECORD COPY

N L INDUSTRIES, INC. METAL DIVISION EASTERN REGION

CARD CODE	DEPT.	SALES CLASS	C/A	R/N	QTY. OR WEIGHT	PRICE PER UNIT	AMOUNT	DESCRIPTION	MISC. CHARGES
MS									
MS									
MS									

ORDER NO.	SHIPPED FROM	F.O.B.		DATE SHIPPED ▶
M-5582	S&R - PA	PA.		4/18/75

SHIP PT.	CUSTOMER NO.	TYPE	STATE	COUNTY	CITY	TAX	TERR.	SLM.	DATE ENTERED	SCHED. SHIP DATE	CAR OR VEHICLE NO.

SOLD TO:

NL INDS., INC.
PEDRICKTOWN, N.J.

SHIP TO:

NL INDS., INC.
PEDRICKTOWN, N.J.

EXEMPTION NUMBER:

PPD/COL	B/L	B. INST	COPIES	FREIGHT - A, NA, EW	CUSTOMER ORDER NO. – REQ. NO.	TERMS
C						

TRK NO.	ROUTE & DELIVERING CARRIER	SHIPPING - TRUCKER INST.
	LEES' TRUCKING	

LINE CODE	QTY. ORDERED	ITEM DESCRIPTION	QTY. SHIPPED	PRICE PER UNIT	STAT. QUANTITY
	1 T/L	DUPONT SLAG	42180#		
			X 80 / 33744		
		Gross Wt - 42180#	NE		

SPECIAL INSTRUCTIONS:

CREDIT TERMS LEGEND:

(01) 2/10th PROX, N/30
(04) 2/10, N/30
(06) 2/10th PROX, N/25th PROX
(07) 1/10, N/30
(10) ½/10, N/30
(11) NET CASH
(12) N/10
(13) N/30
(15) N/10th PROX
(17) N/20th PROX

PRINTED BY THE STANDARD REGISTER COMPANY U.S.A. STANSET

COPY

N L INDUSTRIES, INC. METAL DIVISION EASTERN REGION

CARD CODE	DEPT.	SALES CLASS	C/A	R/N	QTY. OR WEIGHT	PRICE PER UNIT	AMOUNT	DESCRIPTION
M5								
M5								
M5								

MISC. CHARGES

ORDER NO.	SHIPPED FROM	F.O.B.		DATE SHIPPED
K-5583	S&R - PA	PA		4/18/75

SHIP PT.	CUSTOMER NO.	TYPE	STATE	COUNTY	CITY	TAX	TERR.	SLM.	DATE ENTERED	SCHED. SHIP DATE	CAR OR VEHICLE NO.

SOLD TO:

NL INDS., INC.
PEDRICKTOWN, N.J.

SHIP TO:

NL INDS., INC.
PEDRICKTOWN, N.J.

EXEMPTION NUMBER:

PPD/COL	B/L	B. INST	COPIES	FREIGHT - A, NA, EW	CUSTOMER ORDER NO. - REQ. NO.	TERMS
G						

TRK NO.	ROUTE & DELIVERING CARRIER	SHIPPING - TRUCKER INST.
	LEE'S TRUCKING	

LINE CODE	QTY. ORDERED	ITEM DESCRIPTION	QTY. SHIPPED	PRICE PER UNIT	STAT. QUANTITY
	1 T/L	DUPONT SLAG	37560#		
			x 80		
			30048		
			~~45400~~		
				363216	
					~~340000~~
		Gross Wt - 37560#	WE		

SPECIAL INSTRUCTIONS:

CREDIT TERMS LEGEND:

(01) 2/10th PROX, N/30	(11) NET CASH
(04) 2/10, N/30	(12) N/10
(06) 2/10th PROX, N/25th PROX	(13) N/30
(07) 1/10, N/30	(15) N/10th PROX
(10) ½/10, N/30	(17) N/20th PROX

PRINTED BY THE STANDARD REGISTER COMPANY U.S.A. STANSET ®

PRICING RECORD COPY

N L INDUSTRIES, INC. METAL DIVISION EASTERN REGION

CARD CODE	DEPT.	SALES CLASS	C/A	R/N	QTY. OR WEIGHT	PRICE PER UNIT	AMOUNT	DESCRIPTION	MISC. CHARGES
M5									
M5									
M5									

ORDER NO.	SHIPPED FROM	F.O.B.		DATE SHIPPED
X-5595	GAR - PA	PA		4/18/75

SHIP PT.	CUSTOMER NO.	TYPE	STATE	COUNTY	CITY	TAX	TERR.	SLM.	DATE ENTERED	SCHED. SHIP DATE	CAR OR VEHICLE NO.

SOLD TO:

NL INDS., INC.
PEDRICKTOWN, N.J.

SHIP TO:

NL INDS., INC.
PEDRICKTOWN, N.J.

EXEMPTION NUMBER:

PPD/COL	B/L	B. INST	COPIES	FREIGHT - A, NA, EW	CUSTOMER ORDER NO. - REQ. NO.	TERMS
C						

TRK NO.	ROUTE & DELIVERING CARRIER	SHIPPING - TRUCKER INST.
	LEE'S TRUCKING	

LINE CODE	QTY. ORDERED	ITEM DESCRIPTION	QTY. SHIPPED	PRICE PER UNIT	STAT. QUANTITY
	1 T/L	DUPONT SLAG	45180#		
			X 80		
			36144		
		GROSS WT - 45180#	NE		

SPECIAL INSTRUCTIONS:

CREDIT TERMS LEGEND:

(01) 2/10th PROX, N/30	(11) NET CASH
(04) 2/10, N/30	(12) N/10
(06) 2/10th PROX, N/25th PROX	(13) N/30
(07) 1/10, N/30	(15) N/10th PROX
(10) ½/10, N/30	(17) N/20th PROX

PRINTED BY THE STANDARD REGISTER COMPANY U.S.A. STANSET ®

PRICING RECORD COPY

NL INDUSTRIES, INC. METAL DIVISION EASTERN REGION

CARD CODE	DEPT.	SALES CLASS	C/A	R/N	QTY. OR WEIGHT	PRICE PER UNIT	AMOUNT	DESCRIPTION	MISC. CHARGES
M5									
M5									
M5									

ORDER NO.	SHIPPED FROM	F.O.B.		DATE SHIPPED ▶
M-5504	H&R - PA	PA		4/16/75

SHIP PT.	CUSTOMER NO.	TYPE	STATE	COUNTY	CITY	TAX	TERR.	SLM.	DATE ENTERED	SCHED. SHIP DATE	CAR OR VEHICLE NO.

SOLD TO:

NL INDS., INC.
PEDRICKTOWN, N.J.

SHIP TO:

NL INDS., INC.
PEDRICKTOWN, N.J.

EXEMPTION NUMBER:

PPD/COL	B/L	B. INST	COPIES	FREIGHT - A, NA, EW	CUSTOMER ORDER NO. - REQ. NO.	TERMS
C						

TRK NO.	ROUTE & DELIVERING CARRIER	SHIPPING - TRUCKER INST.
	LEE'S TRUCKING	

LINE CODE	QTY. ORDERED	ITEM DESCRIPTION	QTY. SHIPPED	PRICE PER UNIT	STAT. QUANTITY
	1 T/L	DUPONT SLAG	44040#		
			x 80		
			35232		
		Gross Wt - 44040#	WE		

SPECIAL INSTRUCTIONS:

CREDIT TERMS LEGEND:

(01) 2/10th PROX, N/30	(11) NET CASH
(04) 2/10, N/30	(12) N/10
(06) 2/10th PROX, N/25th PROX	(13) N/30
(07) 1/10, N/30	(15) N/10th PROX
(10) ½/10, N/30	(17) N/20th PROX

S

PRINTED BY THE STANDARD REGISTER COMPANY U.S.A. STANSET ®

PRICING RECORD COPY

N L INDUSTRIES, INC. METAL DIVISION EASTERN REGION

CARD CODE	DEPT.	SALES CLASS	C/A	B/IN	QTY. OR WEIGHT	PRICE PER UNIT	AMOUNT	DESCRIPTION	MISC. CHARGES
M5									
M5									
M5									

ORDER NO.	SHIPPED FROM	F.O.B.		DATE SHIPPED
H-5593	B&R - PA	PA		4/18/75

SHIP PT.	CUSTOMER NO.	TYPE	STATE	COUNTY	CITY	TAX	TERR.	SLM.	DATE ENTERED	SCHED. SHIP DATE	CAR OR VEHICLE NO.

SOLD TO:

NL INDS., INC.
PEDRICKTOWN, N.J.

SHIP TO:

NL INDS., INC.
PEDRICKTOWN, N.J.

EXEMPTION NUMBER:

PPD/COL	B/L	B. INST	COPIES	FREIGHT - A, NA, EW	CUSTOMER ORDER NO. – REQ. NO.	TERMS
C						

TRK. NO.	ROUTE & DELIVERING CARRIER	SHIPPING - TRUCKER INST.
	LEE'S TRUCKING	

LINE CODE	QTY. ORDERED	ITEM DESCRIPTION	QTY. SHIPPED	PRICE PER UNIT	STAT. QUANTITY
	1 T/L	DUPONT SLAG	41780#		
			X PO 33424		
		Gross Wt - 41780#	NE		

SPECIAL INSTRUCTIONS:

CREDIT TERMS LEGEND:

(01) 2/10th PROX, N/30	(11) NET CASH
(04) 2/10, N/30	(12) N/10
(06) 2/10th PROX, N/25th PROX	(13) N/30
(07) 1/10, N/30	(15) N/10th PROX
(10) 1½/10, N/30	(17) N/20th PROX

PRINTED BY THE STANDARD REGISTER COMPANY U.S.A. STANSET ®

PRICING RECORD COPY

N L INDUSTRIES, INC. METAL DIVISION EASTERN REGION

CARD CODE	DEPT.	SALES CLASS	C/A	R/N	QTY. OR WEIGHT	PRICE PER UNIT	AMOUNT	DESCRIPTION	MISC. CHARGES
M5									
M5									
M5									

ORDER NO.	SHIPPED FROM	F.O.B.		DATE SHIPPED
M-5561	B&R - PA	PA		4/17/75

SHIP PT.	CUSTOMER NO.	TYPE	STATE	COUNTY	CITY	TAX	TERR.	SLM.	DATE ENTERED	SCHED. SHIP DATES	CAR OR VEHICLE NO.

SOLD TO:

NL INDS., INC.
PEDRICKTOWN, N.J.

SHIP TO:

NL INDS., INC.
PEDRICKTOWN, N.J.

EXEMPTION NUMBER:

PPD/COL	B/L	B. INST	COPIES	FREIGHT - A, NA, EW	CUSTOMER ORDER NO. - REQ. NO.	TERMS
C						

TRK NO.	ROUTE & DELIVERING CARRIER	SHIPPING - TRUCKER INST.
	LEE'S TRUCKING	

LINE CODE	QTY. ORDERED	ITEM DESCRIPTION	QTY. SHIPPED	PRICE PER UNIT	STAT. QUANTITY
	1 T/L	DU PONT SLAG	39520#		
			X.80		
			31616		
		Gross Wt - 39520#	WE		

SPECIAL INSTRUCTIONS:

CREDIT TERMS LEGEND:

(01) 2/10th PROX, N/30	(11) NET CASH
(04) 2/10, N/30	(12) N/10
(06) 2/10th PROX, N/25th PROX	(13) N/30
(07) 1/10, N/30	(15) N/10th PROX
(10) ½/10, N/30	(17) N/20th PROX

PRICING RECORD COPY

N L INDUSTRIES, INC. METAL DIVISION EASTERN REGION

CARD CODE	DEPT.	SALES CLASS	C/A	R/N	QTY. OR WEIGHT	PRICE PER UNIT	AMOUNT	DESCRIPTION	MISC. CHARGES
M5									
M5									
M5									

ORDER NO.	SHIPPED FROM	F.O.B.		DATE SHIPPED
K-5562	S&R - PA	PA		4/17/75

SHIP PT.	CUSTOMER NO.	TYPE	STATE	COUNTY	CITY	TAX	TERR.	SLM.	DATE ENTERED	SCHED. SHIP DATE	CAR OR VEHICLE NO.

SOLD TO:

NL INDS., INC.
PEDRICKTOWN, N.J.

SHIP TO:

NL INDS., INC.
PEDRICKTOWN, N.J.

EXEMPTION NUMBER:

PPD/COL	B/L	B. INST	COPIES	FREIGHT - A, NA, EW	CUSTOMER ORDER NO. - REQ. NO.	TERMS
C						

TRK NO.	ROUTE & DELIVERING CARRIER	SHIPPING - TRUCKER INST.
	LEE'S TRUCKING	

LINE CODE	QTY. ORDERED	ITEM DESCRIPTION	QTY. SHIPPED	PRICE PER UNIT	STAT. QUANTITY
	1 T/L	EU PONT SLAG	42200#		
			X 80 / 33760		
		Gross Wt - 42200# WE			

SPECIAL INSTRUCTIONS:

CREDIT TERMS LEGEND:

(01) 2/10th PROX, N/30	(11) NET CASH
(04) 2/10, N/30	(12) N/10
(06) 2/10th PROX, N/25th PROX	(13) N/30
(07) 1/10, N/30	(15) N/10th PROX
(10) ½/10, N/30	(17) N/20th PROX

S

PRICING RECORD COPY

NL INDUSTRIES, INC. METAL DIVISION EASTERN REGION

CARD CODE	DEPT.	SALES CLASS	C/A	R/N	QTY. OR WEIGHT	PRICE PER UNIT	AMOUNT	DESCRIPTION
M5								
M5								
M5								

MISC. CHARGES

ORDER NO.	SHIPPED FROM	F.O.B.		DATE SHIPPED
M-5563	S&R - PA	PA		4/17/75

SHIP PT.	CUSTOMER NO.	TYPE	STATE	COUNTY	CITY	TAX	TERR.	SLM.	DATE ENTERED	SCHED. SHIP DATE	CAR OR VEHICLE NO.

SOLD TO:

NL INDS., INC.
PEDRICKTOWN, N.J.

SHIP TO:

NL INDS., INC.
PEDRICKTOWN, N.J.

EXEMPTION NUMBER:

PPD/COL	B/L	B. INST	COPIES	FREIGHT - A, NA, EW	CUSTOMER ORDER NO. - REQ. NO.	TERMS
C						

TRK NO.	ROUTE & DELIVERING CARRIER	SHIPPING - TRUCKER INST.
	LEE'S TRUCKING	

LINE CODE	QTY. ORDERED	ITEM DESCRIPTION	QTY. SHIPPED	PRICE PER UNIT	STAT. QUANTITY
	1 T/L	DUPONT SLAG	42640#		
			X 80 / 34112		
		Gross Wt - 42640#	WE		

SPECIAL INSTRUCTIONS:

CREDIT TERMS LEGEND:

(01) 2/10th PROX, N/30
(04) 2/10, N/30
(06) 2/10th PROX, N/25th PROX
(07) 1/10, N/30
(10) ½/10, N/30
(11) NET CASH
(12) N/10
(13) N/30
(15) N/10th PROX
(17) N/20th PROX

PRICING RECORD COPY

N L INDUSTRIES, INC. METAL DIVISION EASTERN REGION

CARD CODE	DEPT.	SALES CLASS	C/A	R/N	QTY. OR WEIGHT	PRICE PER UNIT	AMOUNT	DESCRIPTION	MISC. CHARGES
M5									
M5									
M5									

ORDER NO.	SHIPPED FROM	F.O.B.		DATE SHIPPED
M-5564	S&R - PA	PA		4/17/75

SHIP PT.	CUSTOMER NO.	TYPE	STATE	COUNTY	CITY	TAX	TERR.	SLM.	DATE ENTERED	SCHED. SHIP DATE	CAR OR VEHICLE NO.

SOLD TO:

NL INDS., INC.
PEDRICKTOWN, N.J.

SHIP TO:

NL INDS., INC.
PEDRICKTOWN, N.J.

EXEMPTION NUMBER:

PPD/COL	B/L	B. INST	COPIES	FREIGHT - A, NA, EW	CUSTOMER ORDER NO. - REQ. NO.	TERMS
C						

TRK NO.	ROUTE & DELIVERING CARRIER	SHIPPING - TRUCKER INST.
	LEE'S TRUCKING	

LINE CODE	QTY. ORDERED	ITEM DESCRIPTION	QTY. SHIPPED	PRICE PER UNIT	STAT. QUANTITY
	1 T/L	DUPONT SLAG	43000#		
			X 80		
			34400		
		Gross Wt - 43000#	WE		

SPECIAL INSTRUCTIONS:

CREDIT TERMS LEGEND:

(01) 2/10th PROX, N/30
(04) 2/10, N/30
(06) 2/10th PROX, N/25th PROX
(07) 1/10, N/30
(10) ½/10, N/30
(11) NET CASH
(12) N/10
(13) N/30
(15) N/10th PROX
(17) N/20th PROX

PRICING RECORD COPY

NL INDUSTRIES, INC. METAL DIVISION EASTERN REGION

CARD CODE	DEPT.	SALES CLASS	C/A	R/N	QTY. OR WEIGHT	PRICE PER UNIT	AMOUNT	DESCRIPTION	MISC. CHARGES
M5									
M5									
M5									

ORDER NO.	SHIPPED FROM	F.O.B.		DATE SHIPPED ▶
M-5565	B&R - PA	PA		4/17/75

SHIP PT.	CUSTOMER NO.	TYPE	STATE	COUNTY	CITY	TAX	TERR.	SLM.	DATE ENTERED	SCHED. SHIP DATE	CAR OR VEHICLE NO.

SOLD TO:

NL INDS., INC.
PEDRICKTOWN, N.J.

SHIP TO:

NL INDS., INC.
PEDRICKTOWN, N.JL.

EXEMPTION NUMBER:

PPD/COL	B/L	B. INST	COPIES	FREIGHT - A, NA, EW	CUSTOMER ORDER NO. - REQ. NO.	TERMS
G						

TRK NO.	ROUTE & DELIVERING CARRIER	SHIPPING - TRUCKER INST.
	LEE'S TRUCKING	

LINE CODE	QTY. ORDERED	ITEM DESCRIPTION	QTY. SHIPPED	PRICE PER UNIT	STAT. QUANTITY
	1 T/L	DUPONT SLAG	41120#		
			80 / 32896		
		Gross Wt - 41120#	WE		

SPECIAL INSTRUCTIONS:

CREDIT TERMS LEGEND:

(01) 2/10th PROX, N/30	(11) NET CASH
(04) 2/10, N/30	(12) N/10
(06) 2/10th PROX, N/25th PROX	(13) N/30
(07) 1/10, N/30	(15) N/10th PROX
(10) ½/10, N/30	(17) N/20th PROX

PRICING RECORD COPY

N L INDUSTRIES, INC. METAL DIVISION EASTERN REGION

CARD CODE	DEPT.	SALES CLASS	C/A	R/N	QTY. OR WEIGHT	PRICE PER UNIT	AMOUNT	DESCRIPTION	MISC. CHARGES
MS									
MS									
MS									

ORDER NO.	SHIPPED FROM	F.O.B.		DATE SHIPPED
M-5576	S&R - PA	PA.		4/17/75

SHIP PT.	CUSTOMER NO.	TYPE	STATE	COUNTY	CITY	TAX	TERR.	SLM.	DATE ENTERED	SCHED. SHIP DATE	CAR OR VEHICLE NO.

SOLD TO:

NL INDS., INC.
PEDRICKTOWN, N.J.

SHIP TO:

NL INDS., INC.
PEDRICKTOWN, N.J.

EXEMPTION NUMBER:

PPD/COL	B/L	B. INST	COPIES	FREIGHT - A, NA, EW	CUSTOMER ORDER NO. - REQ. NO.	TERMS
C						

TRK NO.	ROUTE & DELIVERING CARRIER	SHIPPING - TRUCKER INST.
	LEE'S TRUCKING	

LINE CODE	QTY. ORDERED	ITEM DESCRIPTION	QTY. SHIPPED	PRICE PER UNIT	STAT. QUANTITY
	1 T/L	DUPONT SLAG	42280#		
			X PO 33824		
		Gross Wt - 42280#	NE		

SPECIAL INSTRUCTIONS:

CREDIT TERMS LEGEND:

(01) 2/10th PROX, N/30	(11) NET CASH
(04) 2/10, N/30	(12) N/10
(06) 2/10th PROX, N/25th PROX	(13) N/30
(07) 1/10, N/30	(15) N/10th PROX
(10) ½/10, N/30	(17) N/20th PROX

PRICING RECORD COPY

N L INDUSTRIES, INC. METAL DIVISION EASTERN REGION

CARD CODE	DEPT.	SALES CLASS	C/A	R/M	QTY. OR WEIGHT	PRICE PER UNIT	AMOUNT	DESCRIPTION	MISC. CHARGES
M5									
M5									
M5									

ORDER NO.	SHIPPED FROM	F.O.B.		DATE SHIPPED
H-5575	S&R - PA	PA		4/27/75

SHIP PT.	CUSTOMER NO.	TYPE	STATE	COUNTY	CITY	TAX	TERR.	SLM.	DATE ENTERED	SCHED. SHIP DATE	CAR OR VEHICLE NO.

SOLD TO:

NL INDS., INC.
PEDRICKTOWN, N.J.

SHIP TO:

NL INDS., INC.
PEDRICKTOWN, N.J.

EXEMPTION NUMBER:

PPD/COL	B/L	B. INST	COPIES	FREIGHT - A, NA, EW	CUSTOMER ORDER NO. - REQ. NO.	TERMS
C						

TRK NO.	ROUTE & DELIVERING CARRIER	SHIPPING - TRUCKER INST.
	LEE'S TRUCKING	

LINE CODE	QTY. ORDERED	ITEM DESCRIPTION	QTY. SHIPPED	PRICE PER UNIT	STAT. QUANTITY
	1 T/L	DUPONT SLAG	39560#		
			X 80		
			31648		
		Gross Wt - 39560#	WE		

SPECIAL INSTRUCTIONS:

CREDIT TERMS LEGEND:

(01) 2/10th PROX, N/30	(11) NET CASH
(04) 2/10, N/30	(12) N/10
(06) 2/10th PROX, N/25th PROX	(13) N/30
(07) 1/10, N/30	(15) N/10th PROX
(10) ½/10, N/30	(17) N/20th PROX

PRICING RECORD COPY

NL INDUSTRIES, INC. METAL DIVISION EASTERN REGION

CARD CODE	DEPT.	SALES CLASS	C/A	R/N	QTY. OR WEIGHT	PRICE PER UNIT	AMOUNT	DESCRIPTION	MISC. CHARGES
MS									
MS									
MS									

ORDER NO.	SHIPPED FROM	F.O.B.		DATE SHIPPED
M-5572	S&R - PA	PA		4/17/75

SHIP PT.	CUSTOMER NO.	TYPE	STATE	COUNTY	CITY	TAX	TERR.	SLM.	DATE ENTERED	SCHED. SHIP. DATES	CAR OR VEHICLE NO.

SOLD TO:

NL INDS., INC.
PEDRICKTOWN, N.J.

SHIP TO:

NL INDS., INC.
PEDRICKTOWN, N.J.

EXEMPTION NUMBER:

PPD/COL	B/L	B. INST	COPIES	FREIGHT - A, NA, EW	CUSTOMER ORDER NO. - REQ. NO.	TERMS
C						

TRK NO.	ROUTE & DELIVERING CARRIER	SHIPPING - TRUCKER INST.
	LEE'S TRUCKING	

LINE CODE	QTY. ORDERED	ITEM DESCRIPTION	QTY. SHIPPED	PRICE PER UNIT	STAT. QUANTITY
	1 T/L	DUPONT SLAG	40740#		
			X 80		
			32592		
		Gross Wt - 40740#	WE		

SPECIAL INSTRUCTIONS:

CREDIT TERMS LEGEND:

(01) 2/10th PROX, N/30
(04) 2/10, N/30
(06) 2/10th PROX, N/25th PROX
(07) 1/10, N/30
(10) ½/10, N/30
(11) NET CASH
(12) N/10
(13) N/30
(15) N/10th PROX
(17) N/20th PROX

PRICING RECORD COPY

NL INDUSTRIES, INC. METAL DIVISION EASTERN REGION

CARD CODE	DEPT.	SALES CLASS	C/A	R/N	QTY. OR WEIGHT	PRICE PER UNIT	AMOUNT	DESCRIPTION	MISC. CHARGES
M5									
M5									
M5									

ORDER NO.	SHIPPED FROM	F.O.B.		DATE SHIPPED
M-5566	BAR - PA	PA		4/17/75

SHIP PT.	CUSTOMER NO.	TYPE	STATE	COUNTY	CITY	TAX	TERR.	SLM.	DATE ENTERED	SCHED. SHIP DATE	CAR OR VEHICLE NO.

SOLD TO:

NL INDS., INC.
PEDRICKTOWN, N.J.

SHIP TO:

NL INDS., INC.
PEDRICKTOWN, N.J.

EXEMPTION NUMBER:

PPD/COL	B/L	B. INST	COPIES	FREIGHT - A, NA, EW	CUSTOMER ORDER NO. - REQ. NO.	TERMS
C						

TRK NO.	ROUTE & DELIVERING CARRIER	SHIPPING - TRUCKER INST.
	LEE'S TRUCKING	

LINE CODE	QTY. ORDERED	ITEM DESCRIPTION	QTY. SHIPPED	PRICE PER UNIT	STAT. QUANTITY
	1 T/L	DUPONT SLAG	41120#		
			x 80 / 32896		
		Gross Wt - 41120#	NE		

SPECIAL INSTRUCTIONS:

CREDIT TERMS LEGEND:

(01) 2/10th PROX, N/30	(11) NET CASH
(04) 2/10, N/30	(12) N/10
(06) 2/10th PROX, N/25th PROX	(13) N/30
(07) 1/10, N/30	(15) N/10th PROX
(10) ½/10, N/30	(17) N/20th PROX

PRICING RECORD COPY

NL INDUSTRIES, INC. METAL DIVISION EASTERN REGION

CARD CODE	DEPT.	SALES CLASS	C/A	R/N	QTY. OR WEIGHT	PRICE PER UNIT	AMOUNT	DESCRIPTION	MISC. CHARGES
M5									
M5									
M5									

ORDER NO.	SHIPPED FROM	F.O.B.		DATE SHIPPED
K-5571	S&R - PA	PA		4/17/75

SHIP PT.	CUSTOMER NO.	TYPE	STATE	COUNTY	CITY	TAX	TERR.	SLM.	DATE ENTERED	SCHED. SHIP DATE	CAR OR VEHICLE NO.

SOLD TO:
NL INDS., INC.
PEDRICKTOWN, N.J.

SHIP TO:
NL INDS., INC.
PEDRICKTOWN, N.J.

EXEMPTION NUMBER:

PPD/COL	B/L	B. INST	COPIES	FREIGHT - A, NA, EW	CUSTOMER ORDER NO. - REQ. NO.	TERMS
C						

TRK NO.	ROUTE & DELIVERING CARRIER	SHIPPING - TRUCKER INST.
	LEE'S TRUCKING	

LINE CODE	QTY. ORDERED	ITEM DESCRIPTION	QTY. SHIPPED	PRICE PER UNIT	STAT. QUANTITY
	1 T/L	DUPONT SLAG	44080#		
			x80 / 3526#		
		Gross - 44080#	NE		

SPECIAL INSTRUCTIONS:

CREDIT TERMS LEGEND:

(01) 2/10th PROX, N/30
(04) 2/10, N/30
(06) 2/10th PROX, N/25th PROX
(07) 1/10, N/30
(10) ½/10, N/30
(11) NET CASH
(12) N/10
(13) N/30
(15) N/10th PROX
(17) N/20th PROX

PRICING RECORD COPY

NL INDUSTRIES, INC. METAL DIVISION EASTERN REGION

CARD CODE	DEPT.	SALES CLASS	C/A	R/N	QTY. OR WEIGHT	PRICE PER UNIT	AMOUNT	DESCRIPTION	MISC. CHARGES
M5									
M5									
M5									

ORDER NO.	SHIPPED FROM	F.O.B.		DATE SHIPPED
K-5612	S&R - PA	PA		4/21/75

SHIP PT.	CUSTOMER NO.	TYPE	STATE	COUNTY	CITY	TAX	TERR.	SLM.	DATE ENTERED	SCHED. SHIP DATE	CAR OR VEHICLE NO.

SOLD TO:

NL INDS., INC.
PEDRICKTOWN, N.J.

SHIP TO:

NL INDS., INC.
PEDRICKTOWN, N.J.

EXEMPTION NUMBER:

PPD/COL	B/L	B. INST	COPIES	FREIGHT - A, NA, EW	CUSTOMER ORDER NO. - REQ. NO.	TERMS
C						

TRK NO.	ROUTE & DELIVERING CARRIER	SHIPPING - TRUCKER INST.
	LEE'S TRUCKING	

LINE CODE	QTY. ORDERED	ITEM DESCRIPTION	QTY. SHIPPED	PRICE PER UNIT	STAT. QUANTITY
	1 T/L	DUPONT SLAG	40300#		
			X 80		
			32240		
		329744			
		Gross Wt - 40300#	WE		

SPECIAL INSTRUCTIONS:

CREDIT TERMS LEGEND:

(01) 2/10th PROX, N/30	(11) NET CASH
(04) 2/10, N/30	(12) N/10
(06) 2/10th PROX, N/25th PROX	(13) N/30
(07) 1/10, N/30	(15) N/10th PROX
(10) ½/10, N/30	(17) N/20th PROX

PRINTED BY THE STANDARD REGISTER COMPANY U.S.A. STANSLIT ®

PRICING RECORD COPY

NL INDUSTRIES, INC. METAL DIVISION EASTERN REGION

CARD CODE	DEPT.	SALES CLASS	C/A	R/N	QTY. OR WEIGHT	PRICE PER UNIT	AMOUNT	DESCRIPTION	MISC. CHARGES
MS									
MS									
MS									

ORDER NO.	SHIPPED FROM	F.O.B.	DATE SHIPPED
M-5613	S&R - PA	PA	4/21/75

SHIP PT.	CUSTOMER NO.	TYPE	STATE	COUNTY	CITY	TAX	TERR.	SLM.	DATE ENTERED	SCHED. SHIP DATE	CAR OR VEHICLE NO.

SOLD TO:

NL INDS., INC.
PEDRICKTOWN, N.J.

SHIP TO:

NL INDS., INC.
PEDRICKTOWN, N.J.

EXEMPTION NUMBER:

PPD/COL.	B/L	B. INST	COPIES	FREIGHT - A, NA, EW	CUSTOMER ORDER NO. – REQ. NO.	TERMS
C						

TRK NO.	ROUTE & DELIVERING CARRIER	SHIPPING - TRUCKER. INST.
	LEE'S TRUCKING	

LINE CODE	QTY. ORDERED	ITEM DESCRIPTION	QTY. SHIPPED	PRICE PER UNIT	STAT. QUANTITY
	1 T/L	DUPONT SLAG	39900#		
			X 80		
			31920		
		Gross Wt - 39900#	WE		

SPECIAL INSTRUCTIONS:

CREDIT TERMS LEGEND:

(01) 2/10th PROX, N/30
(04) 2/10, N/30
(06) 2/10th PROX, N/25th PROX
(07) 1/10, N/30
(10) ½/10, N/30
(11) NET CASH
(12) N/10
(13) N/30
(15) N/10th PROX
(17) N/20th PROX

PRINTED BY THE STANDARD REGISTER COMPANY U.S.A. STANSET ®

PRICING RECORD COPY

N L. INDUSTRIES, INC. METAL DIVISION EASTERN REGION

CARD CODE	DEPT.	SALES CLASS	C/A	R/N	QTY. OR WEIGHT	PRICE PER UNIT	AMOUNT	DESCRIPTION	MISC. CHARGES
M5									
M5									
M5									

ORDER NO.	SHIPPED FROM	F.O.B.		DATE SHIPPED ▶
15-5599	B&R - PA	PA		4/22/75

SHIP PT.	CUSTOMER NO.	TYPE	STATE	COUNTY	CITY	TAX	TERR.	SLM.	DATE ENTERED	SCHED. SHIP DATE	CAR OR VEHICLE NO.

SOLD TO:
NL INDS., INC.
PEDRICKTOWN, N.J.

SHIP TO:
NL INDS., INC.
PEDRICKTOWN, N.J.

EXEMPTION NUMBER:

PPD/COL.	B/L	B. INST	COPIES	FREIGHT - A, NA, EW	CUSTOMER ORDER NO. - REQ. NO.	TERMS
d						

TRK NO.	ROUTE & DELIVERING CARRIER	SHIPPING - TRUCKER INST.
	LEE'S TRUCKING	

LINE CODE	QTY. ORDERED	ITEM DESCRIPTION	QTY. SHIPPED	PRICE PER UNIT	STAT. QUANTITY
	1 T/L	DUPONT SLAG	39240#		
			X PO 3/392		
		Gross Wt - 39240#	WS		

SPECIAL INSTRUCTIONS:

CREDIT TERMS LEGEND:

(01) 2/10th PROX, N/30	(11) NET CASH
(04) 2/10, N/30	(12) N/10
(06) 2/10th PROX, N/25th PROX	(13) N/30
(07) 1/10, N/30	(15) N/10th PROX
(10) ½/10, N/30	(17) N/20th PROX

PRINTED BY THE STANDARD REGISTER COMPANY U.S.A. STANSET ®

PRICING RECORD COPY

NL INDUSTRIES, INC. METAL DIVISION EASTERN REGION

CARD CODE	DEPT.	SALES CLASS	C/A	F/N	QTY. OR WEIGHT	PRICE PER UNIT	AMOUNT	DESCRIPTION	MISC. CHARGES
M5									
M5									
M5									

ORDER NO.	SHIPPED FROM	F.O.B.		DATE SHIPPED ▶
M-5601	S&R - PA	PA		4/21/75

SHIP PT.	CUSTOMER NO.	TYPE	STATE	COUNTY	CITY	TAX	TERR.	SLM.	DATE ENTERED	SCHED. SHIP DATE	CAR OR VEHICLE NO.

SOLD TO:
NL INDS., INC.
PEDRICKTOWN, N.J.

SHIP TO:
NL INDS., INC.
PEDRICKTOWN, N.J.

EXEMPTION NUMBER:

PPD/COL	B/L	B. INST	COPIES	FREIGHT - A, NA, EW	CUSTOMER ORDER NO. - REQ. NO.	TERMS
C						

TRK NO.	ROUTE & DELIVERING CARRIER	SHIPPING - TRUCKER INST.
	LEE'S TRUCKING	

LINE CODE	QTY. ORDERED	ITEM DESCRIPTION	QTY. SHIPPED	PRICE PER UNIT	STAT. QUANTITY
	1 T/L	DUPONT SLAG	39540#		
			X80 / 31632		
		Gross Wt - 39540#			

SPECIAL INSTRUCTIONS:

CREDIT TERMS LEGEND:

(01) 2/10th PROX, N/30	(11) NET CASH
(04) 2/10, N/30	(12) N/10
(06) 2/10th PROX, N/25th PROX	(13) N/30
(07) 1/10, N/30	(15) N/10th PROX
(10) ½/10, N/30	(17) N/20th PROX

PRINTED BY THE STANDARD REGISTER COMPANY U.S.A. STANSET ®

PRICING RECORD COPY

NL INDUSTRIES, INC. METAL DIVISION EASTERN REGION

CARD CODE	DEPT.	SALES CLASS	C/A	R/N	QTY. OR WEIGHT	PRICE PER UNIT	AMOUNT	DESCRIPTION	MISC. CHARGES
M5									
M5									
M5									

ORDER NO.	SHIPPED FROM	F.O.B.		DATE SHIPPED ▶
14-5596	BAR - PA	PA		4/28/75

SHIP PT.	CUSTOMER NO.	TYPE	STATE	COUNTY	CITY	TAX	TERR.	SLM.	DATE ENTERED	SCHED. SHIP DATE	CAR OR VEHICLE NO.

SOLD TO:

NL INDS., INC.
PEDRICKTOWN, N.J.

SHIP TO:

NL INDS., INC.
PEDRICKTOWN, N.J.

EXEMPTION NUMBER:

PPD/COL	B/L	B. INST	COPIES	FREIGHT - A, NA, EW	CUSTOMER ORDER NO. - REQ. NO.	TERMS
C						

TRK NO.	ROUTE & DELIVERING CARRIER	SHIPPING - TRUCKER INST.
	LEE'S TRUCKING	

LINE CODE	QTY. ORDERED	ITEM DESCRIPTION	QTY. SHIPPED	PRICE PER UNIT	STAT. QUANTITY
	1 T/L	DUPONT SLAG	38400#		
			X 80		
			30720		
		Gross Wt - 38400#	NE		

SPECIAL INSTRUCTIONS:

CREDIT TERMS LEGEND:

(01) 2/10th PROX, N/30	(11) NET CASH
(04) 2/10, N/30	(12) N/10
(06) 2/10th PROX, N/25th PROX	(13) N/30
(07) 1/10, N/30	(15) N/10th PROX
(10) ½/10, N/30	(17) N/20th PROX

PRINTED BY THE STANDARD REGISTER COMPANY U.S.A. STAMSET ®

PRICING RECORD COPY

N L INDUSTRIES, INC. METAL DIVISION EASTERN REGION

CARD CODE	DEPT.	SALES CLASS	C/A	R/N	QTY. OR WEIGHT	PRICE PER UNIT	AMOUNT	DESCRIPTION	MISC. CHARGES
M5									
M5									
M5									

ORDER NO.	SHIPPED FROM	F.O.B.		DATE SHIPPED
M-5598	G&R - PA	PA		4/21/75

SHIP PT.	CUSTOMER NO.	TYPE	STATE	COUNTY	CITY	TAX	TERR.	SLM.	DATE ENTERED	SCHED. SHIP DATE	CAR OR VEHICLE NO.

SOLD TO: NL INDS., INC.
PEDRICKTOWN, N.J.

SHIP TO: NL INDS., INC.
PEDRICKTOWN, N.J.

EXEMPTION NUMBER:

PPD COL	B/L	B. INST	COPIES	FREIGHT - A, NA, EW	CUSTOMER ORDER NO. – REQ. NO.	TERMS

TRK NO.	ROUTE & DELIVERING CARRIER	SHIPPING - TRUCKER INST.
	LEE'S TRUCKING	

LINE CODE	QTY. ORDERED	ITEM DESCRIPTION	QTY. SHIPPED	PRICE PER UNIT	STAT. QUANTITY
	1 T/L	DUPONT SLAG	38820#		
			X 80 / 31056		
		Gross Wt - 38820#	WE		

SPECIAL INSTRUCTIONS:

CREDIT TERMS LEGEND:

(01) 2/10th PROX, N/30	(11) NET CASH
(04) 2/10, N/30	(12) N/10
(06) 2/10th PROX, N/25th PROX	(13) N/30
(07) 1/10, N/30	(15) N/10th PROX
(10) ½/10, N/30	(17) N/20th PROX

PRINTED BY THE STANDARD REGISTER COMPANY U.S.A. STANSET ®

PRICING RECORD COPY

N L INDUSTRIES, INC. METAL DIVISION EASTERN REGION

CARD CODE	DEPT.	SALES CLASS	C/A	R/N	QTY. OR WEIGHT	PRICE PER UNIT	AMOUNT	DESCRIPTION	MISC. CHARGES
M5									
M5									
M5									

ORDER NO.	SHIPPED FROM	F.O.B.	DATE SHIPPED
H-5699	S&R - PA	PA	4/21/75

SHIP PT.	CUSTOMER NO.	TYPE	STATE	COUNTY	CITY	TAX	TERR.	SLM.	DATE ENTERED	SCHED. SHIP DATE	CAR OR VEHICLE NO.

SOLD TO:

NL INDS., INC.
PEDRICKTOWN, N.J.

SHIP TO:

NL INDS., INC.
PEDRICKTOWN, N.J.

EXEMPTION NUMBER:

PRO/COL	B/L	B. INST	COPIES	FREIGHT - A, NA, EW	CUSTOMER ORDER NO. - REQ. NO.	TERMS
C						

TRK NO.	ROUTE & DELIVERING CARRIER	SHIPPING - TRUCKER INST.
	LEE'S TRUCKING	

LINE CODE	QTY. ORDERED	ITEM DESCRIPTION	QTY. SHIPPED	PRICE PER UNIT	STAT. QUANTITY
	1 T/L	DUPONT SLAG	44300#		
			X80		
			35440		
		GROSS WT - 44300#	NE		

SPECIAL INSTRUCTIONS:

CREDIT TERMS LEGEND:

(01) 2/10th PROX, N/30	(11) NET CASH
(04) 2/10, N/30	(12) N/10
(06) 2/10th PROX, N/25th PROX	(13) N/30
(07) 1/10, N/30	(15) N/10th PROX
(10) ½/10, N/30	(17) N/20th PROX

PRINTED BY THE STANDARD REGISTER COMPANY U.S.A. STANSET ®

PRICING RECORD COPY

NL INDUSTRIES, INC. METAL DIVISION EASTERN REGION

CARD-CODE	DEPT.	SALES CLASS	C/A	R/N	QTY. OR WEIGHT	PRICE PER UNIT	AMOUNT	DESCRIPTION
M5								
M5								
M5								

MISC. CHARGES

ORDER NO.	SHIPPED FROM	F.O.B.	DATE SHIPPED
M-5602	SER - PA	PA	4/21/75

SHIP PT.	CUSTOMER NO.	TYPE	STATE	COUNTY	CITY	TAX	TERR.	SLM.	DATE ENTERED	SCHED. SHIP DATE	CAR OR VEHICLE NO.

SOLD TO:
NL INDS., INC.
PEDRICKTOWN, N.J.

SHIP TO:
NL INDS., INC.
PEDRICKTOWN, N.J.

EXEMPTION NUMBER:

PPD/COL	B/L	B. INST	COPIES	FREIGHT - A, NA, EW	CUSTOMER ORDER NO. - REQ. NO.	TERMS
C						

TRK NO.	ROUTE & DELIVERING CARRIER	SHIPPING - TRUCKER INST.
	LEE'S TRUCKING	

LINE CODE	QTY. ORDERED	ITEM DESCRIPTION	QTY. SHIPPED	PRICE PER UNIT	STAT. QUANTITY
	1 T/L	DUPONT SLAG	38040#		
			X80		
			3043		
		Gross Wt - 38040#	NE		

SPECIAL INSTRUCTIONS:

CREDIT TERMS LEGEND:

(01) 2/10th PROX, N/30	(11) NET CASH
(04) 2/10, N/30	(12) N/10
(06) 2/10th PROX, N/25th PROX	(13) N/30
(07) 1/10, N/30	(15) N/10th PROX
(10) ½/10, N/30	(17) N/20th PROX

PRINTED BY THE STANDARD REGISTER COMPANY U.S.A. STANSET®

PRICING RECORD COPY

NL INDUSTRIES, INC. METAL DIVISION EASTERN REGION

CARD CODE	DEPT.	SALES CLASS	C/A	R/N	QTY. OR WEIGHT	PRICE PER UNIT	AMOUNT	DESCRIPTION	MISC. CHARGES
M5									
M5									
M5									

ORDER NO.	SHIPPED FROM	F.O.B.		DATE SHIPPED
K-5603	SAR → PA	PA		4/21/75

SHIP PT.	CUSTOMER NO.	TYPE	STATE	COUNTY	CITY	TAX	TERR.	SLM.	DATE ENTERED	SCHED. SHIP DATE	CAR OR VEHICLE NO.

SOLD TO:

NL INDS., INC.
PEDRICKTOWN, N.J.

SHIP TO:

NL INDS., INC.
PEDRICKTOWN, N.J.

EXEMPTION NUMBER:

PPD/COL	B/L	B. INST	COPIES	FREIGHT - A, NA, EW	CUSTOMER ORDER NO. - REQ. NO.	TERMS
C						

TRK NO.	ROUTE & DELIVERING CARRIER	SHIPPING - TRUCKER INST.
	LEE'S TRUCKING	

LINE CODE	QTY. ORDERED	ITEM DESCRIPTION	QTY. SHIPPED	PRICE PER UNIT	STAT. QUANTITY
	1 T/L	DUPONT SLAG	44620#		
			X 80		
			35696		
		GROSS WT - 44620#	NE		

ECIAL INSTRUCTIONS:

CREDIT TERMS LEGEND:

(01) 2/10th PROX, N/30	(11) NET CASH
(04) 2/10, N/30	(12) N/10
(06) 2/10th PROX, N/25th PROX	(13) N/30
(07) 1/10, N/30	(15) N/10th PROX
(10) ½/10, N/30	(17) N/20th PROX

PRINTED BY THE STANDARD REGISTER COMPANY U.S.A. STAMSET ®

PRICING RECORD COPY

N L INDUSTRIES, INC. METAL DIVISION EASTERN REGION

CARD CODE	DEPT.	SALES CLASS	C/A	R/N	QTY. OR WEIGHT	PRICE PER UNIT	AMOUNT	DESCRIPTION	MISC. CHARGES
M5									
M5									
M5									

ORDER NO.	SHIPPED FROM	F.O.B.		DATE SHIPPED ▶
M-5604	BGR - PA	PA		4/21/75

SHIP PT.	CUSTOMER NO.	TYPE	STATE	COUNTY	CITY	TAX	TERR.	SLM.	DATE ENTERED	SCHED. SHIP DATE	CAR OR VEHICLE NO.

SOLD TO:

NL INDS., INC.
PEDRICKTOWN, N.J.

SHIP TO:

NL INDS., INC.
PEDRICKTOWN, N.J.

EXEMPTION NUMBER:

PPD/COL	B/L	B. INST	COPIES	FREIGHT - A, NA, EW	CUSTOMER ORDER NO. – REQ. NO.	TERMS
C						

TRK NO.	ROUTE & DELIVERING CARRIER	SHIPPING - TRUCKER INST.
	LEE'S TRUCKING	

LINE CODE	QTY. ORDERED	ITEM DESCRIPTION	QTY. SHIPPED	PRICE PER UNIT	STAT. QUANTITY
	1 T/L	DUPONT SLAG	45280#		
			X 80		
			36224		
		Gross Wt - 45280#	NE		

SPECIAL INSTRUCTIONS:

CREDIT TERMS LEGEND:

(01) 2/10th PROX, N/30	(11) NET CASH
(04) 2/10, N/30	(12) N/10
(06) 2/10th PROX, N/25th PROX	(13) N/30
(07) 1/10, N/30	(15) N/10th PROX
(10) ½/10, N/30	(17) N/20th PROX

PRINTED BY THE STANDARD REGISTER COMPANY U.S.A. STANSET ®

PRICING RECORD COPY

N L INDUSTRIES, INC METAL DIVISION EASTERN REGION

CARD CODE	DEPT.	SALES CLASS	C/A	R/N	QTY. OR WEIGHT	PRICE PER UNIT	AMOUNT	DESCRIPTION	MISC. CHARGES
MS									
MS									
MS									

ORDER NO.	SHIPPED FROM	F.O.B.		DATE SHIPPED
M-5605	GAR - PA	PA		4/21/75

SHIP PT.	CUSTOMER NO.	TYPE	STATE	COUNTY	CITY	TAX	TERR.	SLM.	DATE ENTERED	SCHED. SHIP DATE	CAR OR VEHICLE NO.

SOLD TO:
NL INDS., INC.
PEDRICKTOWN, N.J.

SHIP TO:
NL INDS., INC.
PEDRICKTOWN, N.J.

EXEMPTION NUMBER:

PPD/COL	B/L	B. INST.	COPIES	FREIGHT - A, NA, EW	CUSTOMER ORDER NO. - REQ. NO.	TERMS
C						

TRK NO.	ROUTE & DELIVERING CARRIER	SHIPPING - TRUCKER INST.
	LEE'S TRUCKING	

LINE CODE	QTY. ORDERED	ITEM DESCRIPTION	QTY. SHIPPED	PRICE PER UNIT	STAT. QUANTITY
	1 T/L	DUPONT SLAG	43640#		
			X 80 / 349/2		
		Gross Wt - 43640#	WB		

SPECIAL INSTRUCTIONS:

CREDIT TERMS LEGEND:

(01) 2/10th PROX, N/30	(11) NET CASH
(04) 2/10, N/30	(12) N/10
(06) 2/10th PROX, N/25th PROX	(13) N/30
(07) 1/10, N/30	(15) N/10th PROX
(10) ½/10, N/30	(17) N/20th PROX

PRINTED BY THE STANDARD REGISTER COMPANY U.S.A. STANSET ®

NL INDUSTRIES

METAL DIVISION

Tel. 212/732-9400

INVOICE

INVOICE DATE 4/29/75

INVOICE NO. MP 9A-41

SOLD TO: NORTHEAST REGION

SHIPPED TO: PEDRICKTOWN

SHIPPED FROM	FREIGHT PPD	FREIGHT COL.	ENCLOSURES B/L	WT.CTF	ASSAY	TALLY	OUR ORDER NO.-LETTER TO	CUST. ORDER NO.	TERMS
PERTH AMBOY							S-1021-DS		

COMMODITY: DU PONT SLAG

PLEASE REMIT TO: NL INDUSTRIES, INC.-METAL DIVISION, P.O. BOX 96495 • CHICAGO, ILL. 60693

CAR NO.	DATE SHIPPED	NO.PIECES	WEIGHT	PRICE	EXTENSION	AMOUNT
M-5592	4/18		42,560			
M-5584	4/18		40,940			
M-5581	4/18		43,040			
M-5580	4/18		44,700			
M-5579	4/18		43,020			
M-5578	4/18		29,020			
M-5582	4/18		42,180			
M-5583	4/18		37,560			
M-5595	4/18		45,180			
M-5594	4/18		44,040			
M-5593	4/18		41,780			
M-5561	4/17		39,520			
M-5562	4/17		42,200			
M-5563	4/17		42,640			
M-5564	4/17		43,000			
M-5565	4/17		41,120			
M-5576	4/17		42,280			
M-5575	4/17		39,560			
M-5572	4/17		40,740			
M-5566	4/17		41,120			
M-5571	4/17		44,080			
[redacted]	[redacted]		[redacted]			

CONTINUED......./

FORM EO-345 C

ACCOUNTING JOURNAL COPY

NL INDUSTRIES METAL DIVISION

Tel. 212/732-9400

INVOICE

INVOICE DATE 4/29/75

INVOICE NO. MP PA-41

SOLD TO: NORTHEAST REGION (CONTINUED)

SHIPPED TO: PEDRICKTOWN

SHIPPED FROM	FREIGHT PPD	FREIGHT COL.	ENCLOSURES B/L	ENCLOSURES WT.CTF	ENCLOSURES ASSAY	ENCLOSURES TALLY	OUR ORDER NO.-LETTER TO	CUST. ORDER NO.	TERMS
PERTH AMBOY							S-1021-DS		

COMMODITY → DU PONT SLAG

PLEASE REMIT TO: NL INDUSTRIES, INC. • METAL DIVISION P.O. BOX 96495 • CHICAGO, ILL. 60693

CAR NO.	DATE SHIPPED	NO.PIECES	WEIGHT	PRICE	EXTENSION	AMOUNT
M-5612	4/21		40,300			
M-5613	4/22		39,900			
M-5599	4/21		39,240			
M-5601	4/21		39,540			
M-5596	4/21		38,400			
M-5598	4/21		38,820			
M-5600	4/21		44,300			
M-5602	4/21		38,040			
M-5603	4/21		44,620			
M-5604	4/21		45,280			
M-5605	4/21		43,640			
			1,322,360	4.00		52,894.40

FORM EO-345 C

ACCOUNTING JOURNAL COPY

BILLING COPY

N L INDUSTRIES, INC. METAL DIVISION EASTERN REGION

CARD CODE	DEPT.	SALES CLASS	C/A	R/N	QTY. OR WEIGHT	PRICE PER UNIT	AMOUNT	DESCRIPTION	MISC. CHARGES
M5									
M5									
M5									

ORDER NO.	SHIPPED FROM	F.O.B.		DATE SHIPPED ▶
M-5592	S&R - PA	PA		4/18/75

SHIP PT.	CUSTOMER NO.	TYPE	STATE	COUNTY	CITY	TAX	TERR.	SLM.	DATE ENTERED	SCHED. SHIP DATE	CAR OR VEHICLE NO.

SOLD TO:

NL INDS., INC.
PEDRICKTOWN, N.J.

SHIP TO:

NL INDS., INC.
PEDRICKTOWN, N.J.

EXEMPTION NUMBER:

PPD/COL	B/L	B. INST	COPIES	FREIGHT - A, NA, EW	CUSTOMER ORDER NO. - REQ. NO.	TERMS
C						

TRX NO.	ROUTE & DELIVERING CARRIER	SHIPPING - TRUCKER INST.
	LEE'S TRUCKING	

LINE CODE	QTY. ORDERED	ITEM DESCRIPTION	QTY. SHIPPED	PRICE PER UNIT	STAT. QUANTITY
	1 T/L	DUPONT SLAG	42560#		
		Gross Wt - 42560#	WE		

SPECIAL INSTRUCTIONS:

CREDIT TERMS LEGEND:

(01) 2/10th PROX, N/30	(11) NET CASH
(04) 2/10, N/30	(12) N/10
(06) 2/10th PROX, N/25th PROX	(13) N/30
(07) 1/10, N/30	(15) N/10th PROX
(10) ½/10, N/30	(17) N/20th PROX

PRINTED BY THE STANDARD REGISTER COMPANY U.S.A. STANSET ®

BILLING COPY

NL INDUSTRIES, INC. METAL DIVISION EASTERN REGION

CARD CODE	DEPT.	SALES CLASS	C/A	R/N	QTY. OR WEIGHT	PRICE PER UNIT	AMOUNT	DESCRIPTION	MISC. CHARGES
M5									
M5									
M5									

ORDER NO.	SHIPPED FROM	F.O.B.		DATE SHIPPED
M-5584	S&R - PA	PA		4/18/75

SHIP PT.	CUSTOMER NO.	TYPE	STATE	COUNTY	CITY	TAX	TERR.	SLM.	DATE ENTERED	SCHED. SHIP DATE	CAR OR VEHICLE NO.

SOLD TO:

NL INDS., INC.
PEDRICKTOWN, N.J.

SHIP TO:

NL INDS., INC.
PEDRICKTOWN, N.J.

EXEMPTION NUMBER:

PPD/COL	B/L	B. INST	COPIES	FREIGHT - A, NA, EW	CUSTOMER ORDER NO. - REQ. NO.	TERMS
0						

TRK NO.	ROUTE & DELIVERING CARRIER	SHIPPING - TRUCKER INST.
	LEE'S TRUCKING	

LINE CODE	QTY. ORDERED	ITEM DESCRIPTION	QTY. SHIPPED	PRICE PER UNIT	STAT. QUANTITY
	1 T/L	DUPONT SLAG	40940#		
		Gross Wt - 40940#	WE		

SPECIAL INSTRUCTIONS:

CREDIT TERMS LEGEND:

(01) 2/10th PROX, N/30
(04) 2/10, N/30
(06) 2/10th PROX, N/25th PROX
(07) 1/10, N/30
(10) ½/10, N/30
(11) NET CASH
(12) N/10
(13) N/30
(15) N/10th PROX.
(17) N/20th PROX

$

PRINTED BY THE STANDARD REGISTER COMPANY U.S.A. STANSET ®

BILLING COPY

N L INDUSTRIES, INC. METAL DIVISION EASTERN REGION

CARD CODE	DEPT.	SALES CLASS	C/A	R/N	QTY. OR WEIGHT	PRICE PER UNIT	AMOUNT	DESCRIPTION	MISC. CHARGES
M5									
M5									
M5									

ORDER NO.	SHIPPED FROM	F.O.B.		DATE SHIPPED
M-5581	B&R - PA	PA		4/28/75

SHIP PT.	CUSTOMER NO.	TYPE	STATE	COUNTY	CITY	TAX	TERR.	SLM.	DATE ENTERED	SCHED. SHIP DATE	CAR OR VEHICLE NO.

SOLD TO:

NL INDS., INC.
PEDRICKTOWN, N.J.

SHIP TO:

NL INDS., INC.
PEDRICKTOWN, N.J.

EXEMPTION NUMBER:

PPD/COL	B/L	B. INST	COPIES	FREIGHT - A, NA, EW	CUSTOMER ORDER NO. - REQ. NO.	TERMS
C						

TRK NO.	ROUTE & DELIVERING CARRIER	SHIPPING - TRUCKER INST.
	LEE'S TRUCKING	

LINE CODE	QTY. ORDERED	ITEM DESCRIPTION	QTY. SHIPPED	PRICE PER UNIT	STAT. QUANTITY
	1 T/L	DUPONT SLAG	43040#		
		Gross Wt - 43040#	WE		

SPECIAL INSTRUCTIONS:

CREDIT TERMS LEGEND:

(01) 2/10th PROX, N/30
(04) 2/10, N/30
(06) 2/10th PROX, N/25th PROX
(07) 1/10, N/30
(10) ½/10, N/30
(11) NET CASH
(12) N/10
(13) N/30
(15) N/10th PROX
(17) N/20th PROX

PRINTED BY THE STANDARD REGISTER COMPANY U.S.A. STANSET ®

BILLING COPY

NL INDUSTRIES, INC. METAL DIVISION EASTERN REGION

CARD CODE	DEPT.	SALES CLASS	C/A	R/N	QTY. OR WEIGHT	PRICE PER UNIT	AMOUNT	DESCRIPTION	MISC. CHARGES
M5									
M5									
M5									

ORDER NO.	SHIPPED FROM	F.O.B.		DATE SHIPPED
M-5580	B&R - PA	PA		4/18/75

SHIP PT.	CUSTOMER NO.	TYPE	STATE	COUNTY	CITY	TAX	TERR.	SLM.	DATE ENTERED	SCHED. SHIP DATE	CAR OR VEHICLE NO.

SOLD TO: NL INDS., INC.
PEDRICKTOWN, N.J.

SHIP TO: NL INDS., INC.
PEDRICKTOWN, N.J.

EXEMPTION NUMBER:

PPD/COL	B/L	B. INST	COPIES	FREIGHT - A, NA, EW	CUSTOMER ORDER NO. - REQ. NO.	TERMS
C						

TRK NO.	ROUTE & DELIVERING CARRIER	SHIPPING - TRUCKER INST.
	LEE'S TRUCKING	

LINE CODE	QTY. ORDERED	ITEM DESCRIPTION	QTY. SHIPPED	PRICE PER UNIT	STAT. QUANTITY
	1 T/L	DUPONT SLAG	44700#		
		Gross Wt - 44700#	WE		

SPECIAL INSTRUCTIONS:

CREDIT TERMS LEGEND:

(01) 2/10th PROX, N/30
(04) 2/10, N/30
(06) 2/10th PROX, N/25th PROX
(07) 1/10, N/30
(10) ½/10, N/30
(11) NET CASH
(12) N/10
(13) N/30
(15) N/10th PROX
(17) N/20th PROX

PRINTED BY THE STANDARD REGISTER COMPANY U.S.A. STANSET ®

BILLING COPY

NL INDUSTRIES, INC. METAL DIVISION EASTERN REGION

CARD CODE	DEPT.	SALES CLASS	C/A	R/N	QTY. OR WEIGHT	PRICE PER UNIT	AMOUNT	DESCRIPTION	MISC. CHARGES
M5									
M5									
M5									

ORDER NO.	SHIPPED FROM	F.O.B.	DATE SHIPPED
M-5579	S&R - PA	PA	4/18/75

SHIP PT.	CUSTOMER NO.	TYPE	STATE	COUNTY	CITY	TAX	TERR.	SLM.	DATE ENTERED	SCHED. SHIP DATE	CAR OR VEHICLE NO.

SOLD TO:

NL INDS., INC.
PEDRICKTOWN, N.J.

SHIP TO:

NL INDS., INC.
PEDRICKTOWN, N.J.

EXEMPTION NUMBER:

PPD/COL	B/L	B. INST	COPIES	FREIGHT - A, NA, EW	CUSTOMER ORDER NO. - REQ. NO.	TERMS
C						

TRK NO.	ROUTE & DELIVERING CARRIER	SHIPPING - TRUCKER INST.
	LEE'S TRUCKING	

LINE CODE	QTY. ORDERED	ITEM DESCRIPTION	QTY. SHIPPED	PRICE PER UNIT	STAT. QUANTITY
	1 T/L	DUPONT SLAG	43020#		
		Gross Wt - 43020#	WE		

SPECIAL INSTRUCTIONS:

CREDIT TERMS LEGEND:

(01) 2/10th PROX, N/30	(11) NET CASH
(04) 2/10, N/30	(12) N/10
(06) 2/10th PROX, N/25th PROX	(13) N/30
(07) 1/10, N/30	(15) N/10th PROX
(10) ½/10, N/30	(17) N/20th PROX

$

PRINTED BY THE STANDARD REGISTER COMPANY U.S.A. STANSET ®

BILLING COPY

NL INDUSTRIES, INC. METAL DIVISION EASTERN REGION

CARD CODE	DEPT.	SALES CLASS	C/A	R/N	QTY. OR WEIGHT	PRICE PER UNIT	AMOUNT	DESCRIPTION	MISC. CHARGES
MS									
MS									
MS									

ORDER NO.	SHIPPED FROM	F.O.B.		DATE SHIPPED
M-5575	S&R - PA	PA		4/18/75

SHIP PT.	CUSTOMER NO.	TYPE	STATE	COUNTY	CITY	TAX	TERR.	SLM.	DATE ENTERED	SCHED. SHIP. DATE	CAR OR VEHICLE NO.

SOLD TO:

NL INDS., INC.
PEDRICKTOWN, N.J.

SHIP TO:

NL INDS., INC.
PEDRICKTOWN, N.J.

EXEMPTION NUMBER:

PPD/COL	B/L	B. INST	COPIES	FREIGHT - A, NA, EW	CUSTOMER ORDER NO. - REQ. NO.	TERMS
C						

TRK NO.	ROUTE & DELIVERING CARRIER	SHIPPING - TRUCKER INST.
	LEE'S TRUCKING	

LINE CODE	QTY. ORDERED	ITEM DESCRIPTION	QTY. SHIPPED	PRICE PER UNIT	STAT. QUANTITY
	1 T/L	DUPONT SLAG	29020#		
		Gross Wt - 29020#	WE		

SPECIAL INSTRUCTIONS:

CREDIT TERMS LEGEND:

(01) 2/10th PROX, N/30
(04) 2/10, N/30
(06) 2/10th PROX, N/25th PROX
(07) 1/10, N/30
(10) ½/10, N/30
(11) NET CASH
(12) N/10
(13) N/30
(15) N/10th PROX
(17) N/20th PROX

PRINTED BY THE STANDARD REGISTER COMPANY U.S.A. STANSET ®

BILLING COPY

N L INDUSTRIES, INC. METAL DIVISION EASTERN REGION

CARD CODE	DEPT.	SALES CLASS	C/A	R/N	QTY. OR WEIGHT	PRICE PER UNIT	AMOUNT	DESCRIPTION	MISC. CHARGES
M5									
M5									
M5									

ORDER NO.	SHIPPED FROM	F.O.B.		DATE SHIPPED ▶
M-5582	B&R - PA	PA		4/18/75

SHIP PT.	CUSTOMER NO.	TYPE	STATE	COUNTY	CITY	TAX	TERR.	SLM.	DATE ENTERED	SCHED. SHIP DATE	CAR OR VEHICLE NO.

SOLD TO:

NL INDS., INC.
PEDRICKTOWN, N.J.

SHIP TO:

NL INDS., INC.
PEDRICKTOWN, N.J.

EXEMPTION NUMBER:

PPD/COL	B/L	B. INST	COPIES	FREIGHT - A, NA, EW	CUSTOMER ORDER NO. - REQ. NO.	TERMS
C						

TRK NO.	ROUTE & DELIVERING CARRIER	SHIPPING - TRUCKER INST.
	LEES' TRUCKING	

LINE CODE	QTY. ORDERED	ITEM DESCRIPTION	QTY. SHIPPED	PRICE PER UNIT	STAT. QUANTITY
	1 T/L	DUPONT SLAG	42180#		
		Gross Wt - 42180#	WE		

SPECIAL INSTRUCTIONS:

CREDIT TERMS LEGEND:

(01) 2/10th PROX, N/30	(11) NET CASH
(04) 2/10, N/30	(12) N/10
(06) 2/10th PROX, N/25th PROX	(13) N/30
(07) 1/10, N/30	(15) N/10th PROX
(10) ½/10, N/30	(17) N/20th PROX

$

PRINTED BY THE STANDARD REGISTER COMPANY U.S.A. STANSET ®

N L INDUSTRIES, INC. METAL DIVISION EASTERN REGION

CARD CODE	DEPT.	SALES CLASS	C/A	R/N	QTY. OR WEIGHT	PRICE PER UNIT	AMOUNT	DESCRIPTION	MISC. CHARGES
M5									
M5									
M5									

ORDER NO.	SHIPPED FROM	F.O.B.		DATE SHIPPED
M-5583	S&R - PA	PA		4/18/75

SHIP PT.	CUSTOMER NO.	TYPE	STATE	COUNTY	CITY	TAX	TERR.	SLM.	DATE ENTERED	SCHED. SHIP DATE	CAR OR VEHICLE NO.

SOLD TO:

NL INDS., INC.
PEDRICKTOWN, N.J.

SHIP TO:

NL INDS., INC.
PEDRICKTOWN, N.J.

EXEMPTION NUMBER:

PPD COL	B/L	B. INST	COPIES	FREIGHT - A, NA, EW	CUSTOMER ORDER NO. - REQ. NO.	TERMS
C						

TRK NO.	ROUTE & DRIVER/CARRIER	SHIPPING - TRUCKER INST.
	LEE'S TRUCKING	

LINE CODE	QTY. ORDERED	ITEM DESCRIPTION	QTY. SHIPPED	PRICE PER UNIT	STAT. QUANTITY
	1 T/L	DUPONT SLAG	37560#		
		Gross Wt - 37560#	WE		

SPECIAL INSTRUCTIONS:

CREDIT TERMS LEGEND:

(01) 2/10th PROX, N/30
(04) 2/10, N/30
(06) 2/10th PROX, N/25th PROX
(07) 1/10, N/30
(10) 1/2/10, N/30
(11) NET CASH
(12) N/10
(13) N/30
(15) N/10th PROX
(17) N/20th PROX

PRINTED BY THE STANDARD REGISTER COMPANY U.S.A. STANSET ®

BILLING COPY

NL INDUSTRIES, INC. METAL DIVISION EASTERN REGION

CARD CODE	DEPT.	SALES CLASS	C/A	R/N	QTY. OR WEIGHT	PRICE PER UNIT	AMOUNT	DESCRIPTION	MISC. CHARGES
M5									
M5									
M5									

ORDER NO.	SHIPPED FROM	F.O.B.		DATE SHIPPED
M-5595	S&R - PA	PA		4/18/75

SHIP PT.	CUSTOMER NO.	TYPE	STATE	COUNTY	CITY	TAX	TERR.	SLM.	DATE ENTERED	SCHED. SHIP DATE	CAR OR VEHICLE NO.

SOLD TO:

NL INDS., INC.
PEDRICKTOWN, N.J.

SHIP TO:

NL INDS., INC.
PEDRICKTOWN, N.J.

EXEMPTION NUMBER:

PPD/COL	B/L	B. INST	COPIES	FREIGHT - A, NA, EW	CUSTOMER ORDER NO. - REQ. NO.	TERMS
C						

TRK NO.	ROUTE & DELIVERING CARRIER	SHIPPING - TRUCKER INST.
	LEE'S TRUCKING	

LINE CODE	QTY. ORDERED	ITEM DESCRIPTION	QTY. SHIPPED	PRICE PER UNIT	STAT. QUANTITY
	1 T/L	DUPONT SLAG	45180#		
		Gross Wt - 45180#	WE		

SPECIAL INSTRUCTIONS:

CREDIT TERMS LEGEND:

(01) 2/10th PROX, N/30
(04) 2/10, N/30
(06) 2/10th PROX, N/25th PROX
(07) 1/10, N/30
(10) ½/10, N/30
(11) NET CASH
(12) N/10
(13) N/30
(15) N/10th PROX
(17) N/20th PROX

PRINTED BY THE STANDARD REGISTER COMPANY U.S.A. STANSET ®

BILLING COPY

N L INDUSTRIES, INC. METAL DIVISION EASTERN REGION

CARD CODE	DEPT.	SALES CLASS	C/A	R/N	QTY. OR WEIGHT	PRICE PER UNIT	AMOUNT	DESCRIPTION	MISC. CHARGES
M5									
M5									
M5									

ORDER NO.	SHIPPED FROM	F.O.B.		DATE SHIPPED
M-5594	S&R - PA	PA		4/18/75

SHIP PT.	CUSTOMER NO.	TYPE	STATE	COUNTY	CITY	TAX	TERR.	SLM.	DATE ENTERED	SCHED. SHIP DATE	CAR OR VEHICLE NO.

SOLD TO:

NL INDS., INC.
PEDRICKTOWN, N.J.

SHIP TO:

NL INDS., INC.
PEDRICKTOWN, N.J.

EXEMPTION NUMBER:

PPD/COL	B/L	B. INST	COPIES	FREIGHT - A, NA, EW	CUSTOMER ORDER NO. - REQ. NO.	TERMS
C						

TRK. NO.	ROUTE & DELIVERING CARRIER	SHIPPING - TRUCKER INST.
	LEE'S TRUCKING	

LINE CODE	QTY. ORDERED	ITEM DESCRIPTION	QTY. SHIPPED	PRICE PER UNIT	STAT. QUANTITY
	1 T/L	DUPONT SLAG	44040#		
		Gross Wt - 44040#	WE		

SPECIAL INSTRUCTIONS:

CREDIT TERMS LEGEND:

(01) 2/10th PROX, N/30
(04) 2/10, N/30
(06) 2/10th PROX, N/25th PROX
(07) 1/10, N/30
(10) ½/10, N/30
(11) NET CASH
(12) N/10
(13) N/30
(15) N/10th PROX
(17) N/20th PROX

PRINTED BY THE STANDARD REGISTER COMPANY U.S.A. STANSET ®

BILLING COPY

N L INDUSTRIES, INC. METAL DIVISION EASTERN REGION

CARD CODE	DEPT.	SALES CLASS	C/A	R/N	QTY. OR WEIGHT	PRICE PER UNIT	AMOUNT	DESCRIPTION	MISC. CHARGES
M5									
M5									
M5									

ORDER NO.	SHIPPED FROM	F.O.B.		DATE SHIPPED
M-5593	S&R - PA	PA		4/18/75

SHIP PT.	CUSTOMER NO.	TYPE	STATE	COUNTY	CITY	TAX	TERR.	SLM.	DATE ENTERED	SCHED. SHIP DATE	CAR OR VEHICLE NO.

SOLD TO:

NL INDS., INC.
PEDRICKTOWN, N.J.

SHIP TO:

NL INDS., INC.
PEDRICKTOWN, N.J.

EXEMPTION NUMBER:

PD/COL	B/L	B. INST	COPIES	FREIGHT - A, NA, EW	CUSTOMER ORDER NO. – REQ. NO.	TERMS
C						

TRK NO.	ROUTE & DELIVERING CARRIER	SHIPPING - TRUCKER INST.
	LEE'S TRUCKING	

LINE CODE	QTY. ORDERED	ITEM DESCRIPTION	QTY. SHIPPED	PRICE PER UNIT	STAT. QUANTITY
	1 T/L	DUPONT SLAG	41780#		
		Gross Wt - 41780#	WE		

SPECIAL INSTRUCTIONS:

CREDIT TERMS LEGEND:

(01) 2/10th PROX, N/30
(04) 2/10, N/30
(06) 2/10th PROX, N/25th PROX
(07) 1/10, N/30
(10) ½/10, N/30
(11) NET CASH
(12) N/10
(13) N/30
(15) N/10th PROX
(17) N/20th PROX

PRINTED BY THE STANDARD REGISTER COMPANY U.S.A. STANSET ®

BILLING COPY

N.L. INDUSTRIES, INC. METAL DIVISION EASTERN REGION

CARD CODE	DEPT.	SALES CLASS	C/A	R/N	QTY. OR WEIGHT	PRICE PER UNIT	AMOUNT	DESCRIPTION	MISC. CHARGES
M5									
M5									
M5									

ORDER NO.	SHIPPED FROM	F.O.B.		DATE SHIPPED
M-5561	S&R - PA	PA		4/17/75

SHIP PT.	CUSTOMER NO.	TYPE	STATE	COUNTY	CITY	TAX	TERR.	SLN.	DATE ENTERED	SCHED. SHIP DATES	CAR OR VEHICLE NO.

SOLD TO:

NL INDS., INC.
PEDRICKTOWN, N.J.

SHIP TO:

NL INDS., INC.
PEDRICKTOWN, N.J.

S-1021-DS

EXEMPTION NUMBER:

PPD/COL	B/L	B. INST	COPIES	FREIGHT - A, NA, EW	CUSTOMER ORDER NO. - REQ. NO.	TERMS
C						

TRK NO.	ROUTE & DELIVERING CARRIER	SHIPPING - TRUCKER INST.
	LEE'S TRUCKING	

LINE CODE	QTY. ORDERED	ITEM DESCRIPTION	QTY. SHIPPED	PRICE PER UNIT	STAT. QUANTITY
	1 T/L	DU PONT SLAG	39520#		
		Gross Wt. - 39520#	WE		

SPECIAL INSTRUCTIONS:

CREDIT TERMS LEGEND:

(01) 2/10th PROX, N/30
(04) 2/10, N/30
(06) 2/10th PROX, N/25th PROX
(07) 1/10, N/30
(10) ½/10, N/30
(11) NET CASH
(12) N/10
(13) N/30
(15) N/10th PROX
(17) N/20th PROX

BILLING COPY

N L INDUSTRIES, INC. METAL DIVISION EASTERN REGION

CARD CODE	DEPT.	SALES CLASS	C/A	R/N	QTY. OR WEIGHT	PRICE PER UNIT	AMOUNT	DESCRIPTION
M5								
M5								
M5								

MISC. CHARGES

ORDER NO.	SHIPPED FROM	F.O.B.		DATE SHIPPED
M-5562	S&R - PA	PA		4/17/75

SHIP PT.	CUSTOMER NO.	TYPE	STATE	COUNTY	CITY	TAX	TERR.	SLM.	DATE ENTERED	SCHED. SHIP. DATE	CAR OR VEHICLE NO.

SOLD TO:

NL INDS., INC.
PEDRICKTOWN, N.J.

SHIP TO:

NL INDS., INC.
PEDRICKTOWN, N.J.

EXEMPTION NUMBER:

PPD/COL	B/L	B. INST	COPIES	FREIGHT - A, NA, EW	CUSTOMER ORDER NO. – REQ. NO.	TERMS
0						

TRK NO.	ROUTE & DELIVERING CARRIER	SHIPPING - TRUCKER INST.
	LEE'S TRUCKING	

LINE CODE	QTY. ORDERED	ITEM DESCRIPTION	QTY. SHIPPED	PRICE PER UNIT	STAT. QUANTITY
	1 T/L	DU PONT SLAG	42200#		
		Gross Wt - 42200#	WE		

SPECIAL INSTRUCTIONS:

CREDIT TERMS LEGEND:

(01) 2/10th PROX, N/30	(11) NET CASH
(04) 2/10, N/30	(12) N/10
(06) 2/10th PROX, N/25th PROX	(13) N/30
(07) 1/10, N/30	(15) N/10th PROX
(10) ½/10, N/30	(17) N/20th PROX

BILLING COPY

NL INDUSTRIES, INC. METAL DIVISION EASTERN REGION

CARD CODE	DEPT.	SALES CLASS	C/A	R/N	QTY. OR WEIGHT	PRICE PER UNIT	AMOUNT	DESCRIPTION	MISC. CHARGES
M5									
M5									
M5									

ORDER NO.	SHIPPED FROM	F.O.B.		DATE SHIPPED
M-5563	S&R - PA	PA		4/17/75

SHIP PT.	CUSTOMER NO.	TYPE	STATE	COUNTY	CITY	TAX	TERR.	SLM.	DATE ENTERED	SCHED. SHIP DATE	CAR OR VEHICLE NO.

SOLD TO:

NL INDS., INC.
PEDRICKTOWN, N.J.

SHIP TO:

NL INDS., INC.
PEDRICKTOWN, N.J.

EXEMPTION NUMBER:

PPD/COL	B/L	B. INST	COPIES	FREIGHT - A, NA, EW	CUSTOMER ORDER NO. - REQ. NO.	TERMS
C						

TRK NO.	ROUTE & DELIVERING CARRIER	SHIPPING - TRUCKER INST.
	LEE'S TRUCKING	

LINE CODE	QTY. ORDERED	ITEM DESCRIPTION	QTY. SHIPPED	PRICE PER UNIT	STAT. QUANTITY
	1 T/L	DUPONT SLAG	42640#		
		Gross Wt - 42640#	WE		

SPECIAL INSTRUCTIONS:

CREDIT TERMS LEGEND:

(01) 2/10th PROX, N/30	(11) NET CASH
(04) 2/10, N/30	(12) N/10
(06) 2/10th PROX, N/25th PROX	(13) N/30
(07) 1/10, N/30	(15) N/10th PROX
(10) ½/10, N/30	(17) N/20th PROX

S

BILLING COPY

NL INDUSTRIES, INC. METAL DIVISION EASTERN REGION

CARD CODE	DEPT.	SALES CLASS	C/A	R/N	QTY. OR WEIGHT	PRICE PER UNIT	AMOUNT	DESCRIPTION	MISC. CHARGES
M5									
M5									
M5									

ORDER NO.	SHIPPED FROM	F.O.B.		DATE SHIPPED
M-5564	S&R - PA	PA		4/17/75

SHIP PT.	CUSTOMER NO.	TYPE	STATE	COUNTY	CITY	TAX	TERR.	SLM.	DATE ENTERED	SCHED. SHIP DATES	CAR OR VEHICLE NO.

SOLD TO:

NL INDS., INC.
PEDRICKTOWN, N.J.

SHIP TO:

NL INDS., INC.
PEDRICKTOWN, N.J.

EXEMPTION NUMBER:

PPD/COL	B/L	B. INST.	COPIES	FREIGHT - A, NA, EW	CUSTOMER ORDER NO. - REQ. NO.	TERMS
C						

TRK NO.	ROUTE & DELIVERING CARRIER	SHIPPING - TRUCKER INST.
	LEE'S TRUCKING	

LINE CODE	QTY. ORDERED	ITEM DESCRIPTION	QTY. SHIPPED	PRICE PER UNIT	STAT. QUANTITY
	1 T/L	DUPONT SLAG	43000#		
		Gross Wt - 43000#	WE		

SPECIAL INSTRUCTIONS:

CREDIT TERMS LEGEND:

(01) 2/10th PROX, N/30	(11) NET CASH
(04) 2/10, N/30	(12) N/10
(06) 2/10th PROX, N/25th PROX	(13) N/30
(07) 1/10, N/30	(15) N/10th PROX
(10) ½/10, N/30	(17) N/20th PROX

S

BILLING COPY

NL INDUSTRIES, INC. METAL DIVISION EASTERN REGION

CARD CODE	DEPT.	SALES CLASS	C/A	R/N	QTY. OR WEIGHT	PRICE PER UNIT	AMOUNT	DESCRIPTION	MISC. CHARGES
M5									
M5									
M5									

ORDER NO.	SHIPPED FROM	F.O.B.		DATE SHIPPED
M-5565	S&R - PA	PA		4/17/75

SHIP PT.	CUSTOMER NO.	TYPE	STATE	COUNTY	CITY	TAX	TERR.	SLM.	DATE ENTERED	SCHED. SHIP DATE	CAR OR VEHICLE NO.

SOLD TO:

NL INDS., INC.
PEDRICKTOWN, N.J.

SHIP TO:

NL INDS., INC.
PEDRICKTOWN, N.JL

EXEMPTION NUMBER:

PPD/COL	B/L	B. INST	COPIES	FREIGHT - A, NA, EW	CUSTOMER ORDER NO. - REQ. NO.	TERMS
C						

TRK NO.	ROUTE & DELIVERING CARRIER	SHIPPING - TRUCKER INST.
	LEE'S TRUCKING	

LINE CODE	QTY. ORDERED	ITEM DESCRIPTION	QTY. SHIPPED	PRICE PER UNIT	STAT. QUANTITY
	1 T/L	DUPONT SLAG	41120#		
		Gross Wt - 41120#	WE		

SPECIAL INSTRUCTIONS:

CREDIT TERMS LEGEND:

(01) 2/10th PROX, N/30
(04) 2/10, N/30
(06) 2/10th PROX, N/25th PROX
(07) 1/10, N/30
(10) ½/10, N/30
(11) NET CASH
(12) N/10
(13) N/30
(15) N/10th PROX
(17) N/20th PROX

BILLING COPY

NL INDUSTRIES, INC. METAL DIVISION EASTERN REGION

CARD CODE	DEPT.	SALES CLASS	C/A	R/N	QTY. OR WEIGHT	PRICE PER UNIT	AMOUNT	DESCRIPTION	MISC. CHARGES
M5									
M5									
M5									

ORDER NO.	SHIPPED FROM	F.O.B.		DATE SHIPPED ▶
M-5576	S&R - PA	PA		4/17/75

SHIP PT.	CUSTOMER NO.	TYPE	STATE	COUNTY	CITY	TAX	TERR.	SLM.	DATE ENTERED	DESIRED SHIP DATE	CAR OR VEHICLE NO.

SOLD TO:

NL INDS., INC.
PEDRICKTOWN, N.J.

SHIP TO:

NL INDS., INC.
PEDRICKTOWN, N.J.

EXEMPTION NUMBER:

PPD/COL	B/L	B. INST	COPIES	FREIGHT - A, NA, EW	CUSTOMER ORDER NO. - REQ. NO.	TERMS
C						

TRK NO.	ROUTE & DELIVERING CARRIER	SHIPPING - TRUCKER INST.
	LEE'S TRUCKING	

LINE CODE	QTY. ORDERED	ITEM DESCRIPTION	QTY. SHIPPED	PRICE PER UNIT	STAT. QUANTITY
	1 T/L	DUPONT SLAG	42280#		
		Gross Wt - 42280#	WE		

SPECIAL INSTRUCTIONS:

CREDIT TERMS LEGEND:

(01) 2/10th PROX, N/30
(04) 2/10, N/30
(06) 2/10th PROX, N/25th PROX
(07) 1/10, N/30
(10) ½/10, N/30
(11) NET CASH
(12) N/10
(13) N/30
(15) N/10th PROX
(17) N/20th PROX

BILLING COPY

NL INDUSTRIES, INC. METAL DIVISION EASTERN REGION

CARD CODE	DEPT.	SALES CLASS	C/A	R/N	QTY. OR WEIGHT	PRICE PER UNIT	AMOUNT	DESCRIPTION	MISC. CHARGES
M5									
M5									
M5									

ORDER NO.	SHIPPED FROM	F.O.B.		DATE SHIPPED
M-5575	S&R - PA	PA		4/17/75

SHIP PT.	CUSTOMER NO.	TYPE	STATE	COUNTY	CITY	TAX	TERR.	SLM.	DATE ENTERED	SCHED. SHIP DATE	CAR OR VEHICLE NO.

SOLD TO:

NL INDS., INC.
PEDRICKTOWN, N.J.

SHIP TO:

NL INDS., INC.
PEDRICKTOWN, N.J.

EXEMPTION NUMBER:

PPD/COL	B/L	B. INST	COPIES	FREIGHT - A, NA, EW	CUSTOMER ORDER NO. - REQ. NO.	TERMS
C						

TRK NO.	ROUTE & DELIVERING CARRIER	SHIPPING - TRUCKER INST.
	LEE'S TRUCKING	

LINE CODE	QTY. ORDERED	ITEM DESCRIPTION	QTY. SHIPPED	PRICE PER UNIT	STAT. QUANTITY
	1 T/L	DUPONT SLAG	39560#		
		Gross Wt - 39560#	WE		

SPECIAL INSTRUCTIONS:

CREDIT TERMS LEGEND:

(01) 2/10th PROX, N/30
(04) 2/10, N/30
(06) 2/10th PROX, N/25th PROX
(07) 1/10, N/30
(10) ½/10, N/30
(11) NET CASH
(12) N/10
(13) N/30
(15) N/10th PROX
(17) N/20th PROX

BILLING COPY

N.L. INDUSTRIES, INC. METAL DIVISION EASTERN REGION

CARD CODE	DEPT.	SALES CLASS	C/A	R/N	QTY. OR WEIGHT	PRICE PER UNIT	AMOUNT	DESCRIPTION	MISC. CHARGES
M5									
M5									
M5									

ORDER NO.	SHIPPED FROM	F.O.B.		DATE SHIPPED
N-5572	S&R - PA	PA		4/17/75

SHIP PT.	CUSTOMER NO.	TYPE	STATE	COUNTY	CITY	TAX	TERR.	SLM.	DATE ENTERED	SCHED. SHIP DATE	CAR OR VEHICLE NO.

SOLD TO:

NL INDS., INC.
PEDRICKTOWN, N.J.,

SHIP TO:

NL INDS., INC.
PEDRICKTOWN, N.J.

EXEMPTION NUMBER:

PPD/COL	B/L	B. INST	COPIES	FREIGHT - A/ NA, EW	CUSTOMER ORDER NO. - REQ. NO.	TERMS
C						

TRK NO.	ROUTE & DELIVERING CARRIER	SHIPPING - TRUCKER INST.
	LEE'S TRUCKING	

LINE CODE	QTY. ORDERED	ITEM DESCRIPTION	QTY. SHIPPED	PRICE PER UNIT	STAT. QUANTITY
	1 T/L	DUPONT SLAG	40740#		
		Gross Wt - 40740#	WE		

SPECIAL INSTRUCTIONS:

CREDIT TERMS LEGEND:

(01) 2/10th PROX, N/30	(11) NET CASH
(04) 2/10, N/30	(12) N/10
(06) 2/10th PROX, N/25th PROX	(13) N/30
(07) 1/10, N/30	(15) N/10th PROX
(10) ½/10, N/30	(17) N/20th PROX

BILLING COPY

NL INDUSTRIES, INC. METAL DIVISION EASTERN REGION

CARD CODE	DEPT.	SALES CLASS	C/A	R/N	QTY. OR WEIGHT	PRICE PER UNIT	AMOUNT	DESCRIPTION	MISC. CHARGES
M5									
M5									
M5									

ORDER NO.	SHIPPED FROM	F.O.B.		DATE SHIPPED
M-5566	S&R - PA	PA		4/17/75

SHIP PT.	CUSTOMER NO.	TYPE	STATE	COUNTY	CITY	TAX	TERR.	SLM.	DATE ENTERED	SCHED. SHIP DATES	CAR OR VEHICLE NO.

SOLD TO:

NL INDS., INC.
PEDRICKTOWN, N.J.

SHIP TO:

NL INDS., INC.
PEDRICKTOWN, N.J.

EXEMPTION NUMBER:

PPD/COL	B/L	B. INST	COPIES	FREIGHT - A, NA, EW	CUSTOMER ORDER NO. - REQ. NO.	TERMS
C						

TRK NO.	ROUTE & DELIVERING CARRIER	SHIPPING - TRUCKER INST.
	LEE'S TRUCKING	

LINE CODE	QTY. ORDERED	ITEM DESCRIPTION	QTY. SHIPPED	PRICE PER UNIT	STAT. QUANTITY
	1 T/L	DUPONT SLAG	41120#		
		Gross Wt - 41120#	WE		

SPECIAL INSTRUCTIONS:

CREDIT TERMS LEGEND:

(01) 2/10th PROX, N/30
(04) 2/10, N/30
(06) 2/10th PROX, N/25th PROX
(07) 1/10, N/30
(10) ½/10, N/30
(11) NET CASH
(12) N/10
(13) N/30
(15) N/10th PROX
(17) N/20th PROX

BILLING COPY

NL INDUSTRIES, INC. METAL DIVISION EASTERN REGION

CARD CODE	DEPT.	SALES CLASS	C/A	R/N	QTY. OR WEIGHT	PRICE PER UNIT	AMOUNT	DESCRIPTION	MISC. CHARGES
M5									
M5									
M5									

ORDER NO.	SHIPPED FROM	F.O.B.		DATE SHIPPED
M-5571	S&R - PA	PA		4/27/75

SHIP PT.	CUSTOMER NO.	TYPE	STATE	COUNTY	CITY	TAX	TERR.	SLM.	DATE ENTERED	SCHED. SHIP DATE	CAR OR VEHICLE NO.

SOLD TO:
NL INDS., INC.
PEDRICKTOWN, N.J.

SHIP TO:
NL INDS., INC.
PEDRICKTOWN, N.J.

EXEMPTION NUMBER:

PPD/COL	B/L	B. INST	COPIES	FREIGHT - A, NA, EW	CUSTOMER ORDER NO. – REQ. NO.	TERMS
C						

TRK NO.	ROUTE & DELIVERING CARRIER	SHIPPING - TRUCKER INST.
	LEE'S TRUCKING	

LINE CODE	QTY. ORDERED	ITEM DESCRIPTION	QTY. SHIPPED	PRICE PER UNIT	STAT. QUANTITY
	1 T/L	DUPONT SLAG	44080#		
		Gross - 44080#	WE		

SPECIAL INSTRUCTIONS:

CREDIT TERMS LEGEND:

(01) 2/10th PROX, N/30
(04) 2/10, N/30
(06) 2/10th PROX, N/25th PROX
(07) 1/10, N/30
(10) ½/10, N/30
(11) NET CASH
(12) N/10
(13) N/30
(15) N/10th PROX
(17) N/20th PROX

BILLING COPY

NL INDUSTRIES, INC. METAL DIVISION EASTERN REGION

CARD CODE	DEPT.	SALES GLASS	C/A	R/N	QTY. OR WEIGHT	PRICE PER UNIT	AMOUNT	DESCRIPTION	MISC. CHARGES
M5									
M5									
M5									

ORDER NO.	SHIPPED FROM.	F.O.B.		DATE SHIPPED
M-5612	S&R - PA	PA		4/21/75

SHIP PT.	CUSTOMER NO.	TYPE	STATE	COUNTY	CITY	TAX	TERR.	SLM.	DATE ENTERED	SCHED. SHIP DATE	CAR OR VEHICLE NO.

SOLD TO:

NL INDS., INC.
PEDRICKTOWN, N.J.

SHIP TO:

NL INDS., INC.
PEDRICKTOWN, N.J.

EXEMPTION NUMBER:

PPD/COL	B/L	B. INST	COPIES	FREIGHT - A, NA, EW	CUSTOMER ORDER NO. - REQ. NO.	TERMS
C						

TRK NO.	ROUTE & DELIVERING CARRIER	SHIPPING - TRUCKER INST.
	LEE'S TRUCKING	

LINE CODE	QTY. ORDERED	ITEM DESCRIPTION	QTY. SHIPPED	PRICE PER UNIT	STAT. QUANTITY
	1 T/L	DUPONT SLAG	40300#		
		Gross Wt - 40300#	WE		

SPECIAL INSTRUCTIONS:

CREDIT TERMS LEGEND:

(01) 2/10th PROX, N/30	(11) NET CASH
(04) 2/10, N/30	(12) N/10
(06) 2/10th PROX, N/25th PROX	(13) N/30
(07) 1/10, N/30	(15) N/10th PROX
(10) ½/10, N/30	(17) N/20th PROX

PRINTED BY THE STANDARD REGISTER COMPANY U.S.A. STANSET ®

BILLING COPY

NL INDUSTRIES, INC. METAL DIVISION EASTERN REGION

CARD CODE	DEPT.	SALES CLASS	C/A	R/N	QTY. OR WEIGHT	PRICE PER UNIT	AMOUNT	DESCRIPTION	MISC. CHARGES
MS									
MS									
MS									

ORDER NO.	SHIPPED FROM	F.O.B.		DATE SHIPPED
M-5613	S&R - PA	PA		4/22/75

SHIP PT.	CUSTOMER NO.	TYPE	STATE	COUNTY	CITY	TAX	TERR.	SLM.	DATE ENTERED	SCHED. SHIP DATE	CAR OR VEHICLE NO.

SOLD TO:

NL INDS., INC.
PEDRICKTOWN, N.J.

SHIP TO:

NL INDS., INC.
PEDRICKTOWN, N.J.

EXEMPTION NUMBER:

PPD/COL	B/L	B. INST	COPIES	FREIGHT - A, NA, EW	CUSTOMER ORDER NO. - REQ. NO.	TERMS
0						

TRK NO.	ROUTE & DELIVERING CARRIER	SHIPPING - TRUCKER INST.
	LEE'S TRUCKING	

LINE CODE	QTY. ORDERED	ITEM DESCRIPTION	QTY. SHIPPED	PRICE PER UNIT	STAT. QUANTITY
	1 T/L	DUPONT SLAG	39900#		
		Gross Wt - 39900#	WE		

SPECIAL INSTRUCTIONS:

CREDIT TERMS LEGEND:

(01) 2/10th PROX, N/30	(11) NET CASH
(04) 2/10, N/30	(12) N/10
(06) 2/10th PROX, N/25th PROX	(13) N/30
(07) 1/10, N/30	(15) N/10th PROX
(10) ½/10, N/30	(17) N/20th PROX

PRINTED BY THE STANDARD REGISTER COMPANY U.S.A. STAMSET ®

BILLING COPY

N L INDUSTRIES, INC. METAL DIVISION EASTERN REGION

CARD CODE	DEPT.	SALES CLASS	C/A	R/N	QTY. OR WEIGHT	PRICE PER UNIT	AMOUNT	DESCRIPTION	MISC. CHARGES
M5									
M5									
M5									

ORDER NO.	SHIPPED FROM	F.O.B.		DATE SHIPPED ▶
M-5599	S&R - PA	PA		4/21/75

SHIP PT.	CUSTOMER NO.	TYPE	STATE	COUNTY	CITY	TAX	TERR.	SLM.	DATE ENTERED	SCHED. SHIP DATE	CAR OR VEHICLE NO.

SOLD TO:
NL INDS., INC.
PEDRICKTOWN, N.J.

SHIP TO:
NL INDS., INC.
PEDRICKTOWN, N.J.

EXEMPTION NUMBER:

PPD/COL	B/L	B. INST	COPIES	FREIGHT - A, NA, EW	CUSTOMER ORDER NO. – REQ. NO.	TERMS
0						

TRK NO.	ROUTE & DELIVERING CARRIER	SHIPPING - TRUCKER INST.
	LEE'S TRUCKING	

LINE CODE	QTY. ORDERED	ITEM DESCRIPTION	QTY. SHIPPED	PRICE PER UNIT	STAT. QUANTITY
	1 T/L	DUPONT SLAG	39240#		
		Gross Wt - 39240#	WE		

SPECIAL INSTRUCTIONS:

CREDIT TERMS LEGEND:

(01) 2/10th PROX, N/30	(11) NET CASH
(04) 2/10, N/30	(12) N/10
(06) 2/10th PROX, N/25th PROX	(13) N/30
(07) 1/10, N/30	(15) N/10th PROX
(10) 1½/10, N/30	(17) N/20th PROX

PRINTED BY THE STANDARD REGISTER COMPANY U.S.A. STANSET ®

BILLING COPY

NL INDUSTRIES, INC. METAL DIVISION EASTERN REGION

CARD CODE	DEPT.	SALES CLASS	C/A	R/N	QTY. OR WEIGHT	PRICE PER UNIT	AMOUNT	DESCRIPTION	MISC. CHARGES
MS									
MS									
MS									

ORDER NO.	SHIPPED FROM	F.O.B.		DATE SHIPPED ▶
M-5601	S&R - PA	PA		4/21/75

SHIP PT.	CUSTOMER NO.	TYPE	STATE	COUNTY	CITY	TAX	TERR.	SLM.	DATE ENTERED	SCHED. SHIP DATE	CAR OR VEHICLE NO.

SOLD TO:
NL INDS., INC.
PEDRICKTOWN, N.J.

SHIP TO:
NL INDS., INC.
PEDRICKTOWN, N.J.

EXEMPTION NUMBER:

PPD/COL	B/L	B. INST	COPIES	FREIGHT - A, NA, EW	CUSTOMER ORDER NO. - REQ. NO.	TERMS
C						

TRK NO.	ROUTE & DELIVERING CARRIER	SHIPPING - TRUCKER INST.
	LEE'S TRUCKING	

LINE CODE	QTY. ORDERED	ITEM DESCRIPTION	QTY. SHIPPED	PRICE PER UNIT	STAT. QUANTITY
	1 T/L	DUPONT SLAG	39540#		
		Gross Wt - 39540#	WE		

SPECIAL INSTRUCTIONS:

CREDIT TERMS LEGEND:

(01) 2/10th PROX, N/30
(04) 2/10, N/30
(06) 2/10th PROX, N/25th PROX
(07) 1/10, N/30
(10) ½/10, N/30
(11) NET CASH
(12) N/10
(13) N/30
(15) N/10th PROX
(17) N/20th PROX

$

PRINTED BY THE STANDARD REGISTER COMPANY U.S.A. STANSET ®

BILLING COPY

N L INDUSTRIES, INC. METAL DIVISION EASTERN REGION

CARD CODE	DEPT.	SALES CLASS	C/A	R/N	QTY. OR WEIGHT	PRICE PER UNIT	AMOUNT	DESCRIPTION	MISC. CHARGES
MS									
MS									
MS									

ORDER NO.	SHIPPED FROM	F.O.B.		DATE SHIPPED ▶
M-5596	B&R - PA	PA		4/28/75

SHIP PT.	CUSTOMER NO.	TYPE	STATE	COUNTY	CITY	TAX	TERR.	SLM.	DATE ENTERED	SCHED. SHIP DATE	CAR OR VEHICLE NO.

SOLD TO:

NL INDS., INC.
PEDRICKTOWN, N.J.

SHIP TO:

NL INDS., INC.
PEDRICKTOWN, N.J.

EXEMPTION NUMBER:

PPD/COL	B/L	B. INST	COPIES	FREIGHT - A, NA, EW	CUSTOMER ORDER NO. - REQ. NO.	TERMS
C						

TRK NO.	ROUTE - DELIVERING CARRIER	SHIPPING - TRUCKER INST.
	LEE'S TRUCKING	

LINE CODE	QTY. ORDERED	ITEM DESCRIPTION	QTY. SHIPPED	PRICE PER UNIT	STAT. QUANTITY
	1 T/L	DUPONT SLAB	38400#		
		Gross Wt - 38400#	WE		

SPECIAL INSTRUCTIONS:

CREDIT TERMS LEGEND:

(01) 2/10th PROX, N/30
(04) 2/10, N/30
(06) 2/10th PROX, N/25th PROX
(07) 1/10, N/30
(10) ½/10, N/30
(11) NET CASH
(12) N/10
(13) N/30
(15) N/10th PROX
(17) N/20th PROX

PRINTED BY THE STANDARD REGISTER COMPANY U.S.A. STANSET ®

BILLING COPY

N L INDUSTRIES, INC. METAL DIVISION EASTERN REGION

CARD CODE	DEPT.	SALES CLASS	C/A	R/N	QTY. OR WEIGHT	PRICE PER UNIT	AMOUNT	DESCRIPTION	MISC. CHARGES
M5									
M5									
M5									

ORDER NO.	SHIPPED FROM	F.O.B.		DATE SHIPPED ▶
M-5598	Sam - PA	PA		4/21/75

SHIP PT.	CUSTOMER NO.	TYPE	STATE	COUNTY	CITY	TAX	TERR.	SLM.	DATE ENTERED	SCHED. SHIP DATE	CAR OR VEHICLE NO.

SOLD TO:
NL INDS., INC.
PEDRICKTOWN, N.J.

SHIP TO:
NL INDS., INC.
PEDRICKTOWN, N.J.

EXEMPTION NUMBER:

PPD COL	B/L	B. INST	COPIES	FREIGHT - A, NA, EW	CUSTOMER ORDER NO. - REQ. NO.	TERMS

TRK NO.	ROUTE & DELIVERING CARRIER	SHIPPING - TRUCKER INST.
	LEE'S TRUCKING	

LINE CODE	QTY. ORDERED	ITEM DESCRIPTION	QTY. SHIPPED	PRICE PER UNIT	STAT. QUANTITY
	1 T/L	DUPONT SLAG	38820#		
		Gross Wt - 38820#	WE		

SPECIAL INSTRUCTIONS:

CREDIT TERMS LEGEND:

(01) 2/10th PROX, N/30
(04) 2/10, N/30
(06) 2/10th PROX, N/25th PROX
(07) 1/10, N/30
(10) ½/10, N/30
(11) NET CASH
(12) N/10
(13) N/30
(15) N/10th PROX
(17) N/20th PROX

PRINTED BY THE STANDARD REGISTER COMPANY U.S.A. STANSET ®

BILLING COPY

N L INDUSTRIES, INC. METAL DIVISION EASTERN REGION

CARD CODE	DEPT.	SALES CLASS	C/A	R/N	QTY. OR WEIGHT	PRICE PER UNIT	AMOUNT	DESCRIPTION	MISC. CHARGES
MS									
MS									
MS									

ORDER NO.	SHIPPED FROM	F.O.B.		DATE SHIPPED
M-5600	S&R - PA	PA		4/21/75

SHIP PT.	CUSTOMER NO.	TYPE	STATE	COUNTY	CITY	TAX	TERR.	SLM.	DATE ENTERED	SCHED. SHIP DATE	CAR OR VEHICLE NO.

SOLD TO:

NL INDS., INC.
PEDRICKTOWN, N.J.

SHIP TO:

NL INDS., INC.
PEDRICKTOWN, N.J.

EXEMPTION NUMBER:

PPD/COL	B/L	B. INST	COPIES	FREIGHT - A, NA, EW	CUSTOMER ORDER NO. - REQ. NO.	TERMS
C						

TRK NO.	ROUTE & DELIVERING CARRIER	SHIPPING - TRUCKER INST.
	LEE'S TRUCKING	

LINE CODE	QTY. ORDERED	ITEM DESCRIPTION	QTY. SHIPPED	PRICE PER UNIT	STAT. QUANTITY
	1 T/L	DUPONT SLAG	44300#		
		Gross Wt - 44300#	WE		

SPECIAL INSTRUCTIONS:

CREDIT TERMS LEGEND:

(01) 2/10th PROX, N/30
(04) 2/10, N/30
(06) 2/10th PROX, N/25th PROX
(07) 1/10, N/30
(10) ½/10, N/30
(11) NET CASH
(12) N/10
(13) N/30
(15) N/10th PROX
(17) N/20th PROX

PRINTED BY THE STANDARD REGISTER COMPANY U.S.A. STAMSET®

BILLING COPY

N L INDUSTRIES, INC. METAL DIVISION EASTERN REGION

CARD CODE	DEPT.	SALES CLASS	C/A	R/N	QTY. OR WEIGHT	PRICE PER UNIT	AMOUNT	DESCRIPTION	MISC. CHARGES
M5									
M5									
M5									

ORDER NO.	SHIPPED FROM	F.O.B.	DATE SHIPPED
M-5602	B&R - PA	PA	4/21/75

SHIP PT.	CUSTOMER NO.	TYPE	STATE	COUNTY	CITY	TAX	TERR.	SLM.	DATE ENTERED	SCHED. SHIP DATE	CAR OR VEHICLE NO.

SOLD TO:

NL INDS., INC.
PEDRICKTOWN, N. J.

SHIP TO:

NL INDS., INC.
PEDRICKTOWN, N. J.

EXEMPTION NUMBER:

PPD/COL	B/L	B. INST	COPIES	FREIGHT - A, NA, EW	CUSTOMER ORDER NO. - REQ. NO.	TERMS
C						

TRK NO.	ROUTE & DELIVERING CARRIER	SHIPPING - TRUCKER INST.
	LEE'S TRUCKING	

LINE CODE	QTY. ORDERED	ITEM DESCRIPTION	QTY. SHIPPED	PRICE PER UNIT	STAT. QUANTITY
	1 T/L	DUPONT SLAG	38040#		
		Gross Wt - 38040#	WB		

SPECIAL INSTRUCTIONS:

CREDIT TERMS LEGEND:

(01) 2/10th PROX, N/30	(11) NET CASH
(04) 2/10, N/30	(12) N/10
(06) 2/10th PROX, N/25th PROX	(13) N/30
(07) 1/10, N/30	(15) N/10th PROX
(10) ½/10, N/30	(17) N/20th PROX

PRINTED BY THE STANDARD REGISTER COMPANY U.S.A. STANSET ®

BILLING COPY

N L INDUSTRIES, INC. METAL DIVISION EASTERN REGION

CARD CODE	DEPT.	SALES CLASS	C/A	R/N	QTY. OR WEIGHT	PRICE PER UNIT	AMOUNT	DESCRIPTION	MISC. CHARGES
M5									
M5									
M5									

ORDER NO.	SHIPPED FROM	F.O.B.		DATE SHIPPED
M-5603	E&R - PA	PA		4/21/75

SHIP PT.	CUSTOMER NO.	TYPE	STATE	COUNTY	CITY	TAX	TERR.	SLM.	DATE ENTERED	SCHED. SHIP DATE	CAR OR VEHICLE NO.

SOLD TO:

NL INDS., INC.
PEDRICKTOWN, N.J.

SHIP TO:

NL INDS., INC.
PEDRICKTOWN, N.J.

EXEMPTION NUMBER:

PPD/COL	B/L	B. INST	COPIES	FREIGHT - A, NA, EW	CUSTOMER ORDER NO. - REQ. NO.	TERMS
C						

TRK NO.	ROUTE & DELIVERING CARRIER	SHIPPING - TRUCKER INST.
	LEE'S TRUCKING	

LINE CODE	QTY. ORDERED	ITEM DESCRIPTION	QTY. SHIPPED	PRICE PER UNIT	STAT. QUANTITY
	1 T/L	DUPONT SLAG	44620#		
		Gross Wt - 44620#	WE		

SPECIAL INSTRUCTIONS:

CREDIT TERMS LEGEND:

(01) 2/10th PROX, N/30	(11) NET CASH
(04) 2/10, N/30	(12) N/10
(06) 2/10th PROX, N/25th PROX	(13) N/30
(07) 1/10, N/30	(15) N/10th PROX
(10) ½/10, N/30	(17) N/20th PROX

PRINTED BY THE STANDARD REGISTER COMPANY U.S.A. STAMSET ®

BILLING COPY

N L INDUSTRIES, INC. METAL DIVISION EASTERN REGION

CARD CODE	DEPT.	SALES CLASS	C/A	R/N	QTY. OR WEIGHT	PRICE PER UNIT	AMOUNT	DESCRIPTION
M5								
M5								
M5								

MISC. CHARGES

ORDER NO.	SHIPPED FROM	F.O.B.	DATE SHIPPED
M-5604	S&R - PA	PA	4/21/75

SHIP PT.	CUSTOMER NO.	TYPE	STATE	COUNTY	CITY	TAX.	TERR.	SLM.	DATE ENTERED	SCHED. SHIP DATE	CAR OR VEHICLE NO.

SOLD TO:

NL INDS., INC.
PEDRICKTOWN, N.J.

SHIP TO:

NL INDS., INC.
PEDRICKTOWN, N.J.

EXEMPTION NUMBER:

PPD/COL	B/L	B. INST	COPIES	FREIGHT - A, NA, EW	CUSTOMER ORDER NO. - REQ. NO.	TERMS
C						

TRK NO.	ROUTE & DELIVERING CARRIER	SHIPPING - TRUCKER INST.
	LEE'S TRUCKING	

LINE CODE	QTY. ORDERED	ITEM DESCRIPTION	QTY. SHIPPED	PRICE PER UNIT	STAT. QUANTITY
	1 T/L	DUPONT SLAG	45280#		
		Gross Wt - 45280#	WE		

SPECIAL INSTRUCTIONS:

CREDIT TERMS LEGEND:

(01) 2/10th PROX, N/30
(04) 2/10, N/30
(06) 2/10th PROX, N/25th PROX
(07) 1/10, N/30
(10) 1½/10, N/30
(11) NET CASH
(12) N/10
(13) N/30
(15) N/10th PROX
(17) N/20th PROX

$

PRINTED BY THE STANDARD REGISTER COMPANY U.S.A. STANSET ®

BILLING COPY

N L INDUSTRIES, INC. METAL DIVISION EASTERN REGION

CARD CODE	DEPT.	SALES CLASS	C/A	R/IN	QTY. OR WEIGHT	PRICE PER UNIT	AMOUNT	DESCRIPTION	MISC. CHARGES
M5									
M5									
M5									

ORDER NO.	SHIPPED FROM	F.O.B.		DATE SHIPPED
M-5605	S&R - PA	PA		4/21/75

SHIP PT.	CUSTOMER NO.	TYPE	STATE	COUNTY	CITY	TAX	TERR.	SLM.	DATE ENTERED	SCHED. SHIP DATE	CAR OR VEHICLE NO.

SOLD TO:
NL INDS., INC.
PEDRICKTOWN, N.J.

SHIP TO:
NL INDS., INC.
PEDRICKTOWN, N.J.

EXEMPTION NUMBER:

PPD/COL	B/L	B. INST	COPIES	FREIGHT - A, NA, EW	CUSTOMER ORDER NO. - REQ. NO.	TERMS
C						

TRK NO.	ROUTE & DELIVERING CARRIER	SHIPPING - TRUCKER INST.
	LEE'S TRUCKING	

LINE CODE	QTY. ORDERED	ITEM DESCRIPTION	QTY. SHIPPED	PRICE PER UNIT	STAT. QUANTITY
	1 T/L	DUPONT SLAG	43640#		
		Gross Wt - 43640#	WE		

SPECIAL INSTRUCTIONS:

CREDIT TERMS LEGEND:

(01) 2/10th PROX, N/30
(04) 2/10, N/30
(06) 2/10th PROX, N/25th PROX
(07) 1/10, N/30
(10) ½/10, N/30
(11) NET CASH
(12) N/10
(13) N/30
(15) N/10th PROX
(17) N/20th PROX

PRINTED BY THE STANDARD REGISTER COMPANY U.S.A. STANSET ®