PACIFICORP
A BERKSHIRE HATHAWAY ENERGY COMPANY

Huntington Power Plant
6 miles west of Huntington, Utah on Hwy. 31
P.O. Box 680
Huntington, Utah 84528

November 28, 2016

Mr. Bryce Bird, Director
Utah Department of Environmental Quality
Division of Air Quality
195 North 1950 West
P.O. Box 144820
Salt Lake City, UT 84114-4820

RE: **4th Quarter, 2016 Particulate Matter Compliance Test Report - 40 CFR 63 SubPart UUUUU, Huntington Power Plant Unit 1 and Unit 2 (Title V Permit #1501001004)**

Dear Mr. Bird,

In accordance with Title V Permit Condition II.B.3.f.1(b) and 40 CFR §63.10021(d) the Huntington Power Plant submits these 4th Quarter 2016 Particulate Matter (PM) Compliance Test Reports for Unit 1 and Unit 2. 40 CFR §63.10031(f)(6) requires the submittal of compliance test results that were generated prior to April 16, 2017. This submittal is intended to satisfy the report submittal for Huntington Unit 1 and Unit 2, and includes the portable document format (PDF) report that is submitted electronically via the Emissions Collection and Monitoring Plan System (ECMPS).

The summary results of the 4th Quarter 2016 PM test results are:

Unit	Emission rate (lb/mmBtu)
1	0.005
2	0.003

I am authorized to make this submission on behalf of the owners and operators of the affected source or affected units for which the submission is made. I certify under penalty of law that I have personally examined, and am familiar with, the statements and information submitted in this document and all its attachments. Based on my inquiry of those individuals with primary responsibility for obtaining the information, I certify that the statements and information are to the best of my knowledge and belief true, accurate, and complete. I am aware that there are significant penalties for submitting false statements and information, or omitting statements and information, including the possibility of fine or imprisonment.

Should you have any questions regarding this information, please contact Richard Neilson, Huntington Power Plant Environmental Engineer at (435) 687-4334 or me at (435) 687-4211.

Sincerely,

Darrell Cunningham
Managing Director and Responsible Official, Huntington Plant

Enclosures: Emissions Testing Report for PacifiCorp Huntington Unit 1 – Particulate Matter Compliance Testing
Emissions Testing Report for PacifiCorp Huntington Unit 2 – Particulate Matter Compliance Testing

cc: David Barnhisel
Steve Jensen
Director, USEPA Region VIII, w/enclosures

EMCo

EMISSIONS MEASUREMENT COMPANY

Emissions Testing Report for PacifiCorp
Huntington Unit 1
Huntington, Utah

Particulate Matter Compliance Testing

40 CFR Part 63, Subpart UUUUU

Test Date: November 8th, 2016

Project Code PC16-0001.19

11990 W. 52nd Avenue
Wheat Ridge, CO 80033

Office (303) 495-3936
Toll Free (800) 984-9883
Fax (888) 605-0243
www.stacktest.us

Executive Summary

EMCo was contracted by PacifiCorp to conduct compliance testing at the Huntington Power Plant near Huntington, Utah. Testing was performed to determine emission rates of particulate matter (PM) from the exhaust stack of Huntington Unit 1. Compliance test results are summarized in the table below; detailed test results are given in the following report.

PacifiCorp
Huntington Power Plant
PM Compliance Test Results Summary

Source	Parameter	Date	Average Value	Emission Limit
Huntington Unit 1	Filterable Particulate Matter	11/8/2016	0.005	0.030 lb/mmBtu
			0.05	0.30 lb/MW-hr

Each result is the average of three two-hour test runs.

Abbreviations:
lb/mmBtu: pounds per million British thermal units
lb/MW-hr: pounds per megawatt hour

Introduction

EMCo was contracted by PacifiCorp to conduct source testing services at the Huntington Power Plant near Huntington, Utah. The Huntington Plant comprises two pulverized coal-fired boilers. Huntington Unit #1 is equipped with low-NO_x burners and overfire air for nitrogen oxides (NO_x) control, a flue gas desulfurization (FGD) scrubber for sulfur dioxide (SO_2) control and pulse-jet fabric filters for particulate matter (PM) control. Testing was conducted in accordance with the requirements of 40 CFR Part 63 Subpart UUUUU, National Emission Standards for Hazardous Air Pollutants (NESHAP): Coal- and Oil-Fired Electric Utility Steam Generating Units.

Contact information for the project is listed in the table below.

Contact	Affiliation	Telephone	E-mail
Frank Zampedri Environmental Analyst	PacifiCorp	(801) 220-2169	frank.zampedri@pacificorp.com
Richard Neilson Environmental Engineer		(435) 687-4334	richard.neilson@pacificorp.com
Norm Erikson Environmental Scientist	UDEQ	(801) 536-4063	nerikson@utah.gov
Will Stangroom Project Manager	EMCo	(610) 730-2188	wstangroom@stacktest.us

Scope of Work

Testing was performed to determine concentrations and mass emission rates of particulate matter (PM) for comparison to the applicable emission limits listed in the table below.

Source	Regulation	Parameter	Emission Limit
Huntington Unit 1	NESHAP UUUUU	PM (lb/mmBtu)	0.030 lb/mmBtu
		PM (lb/MW-hr)	0.30 lb/MW-hr
Abbreviations: lb/mmBtu: pounds per million British thermal units lb/MW-hr: pounds per megawatt-hour			

Testing Methods

EMCo used the following EPA Reference Methods for the testing program. No deviations from the Reference Methods were noted.

Parameter	EPA Reference Methods	Test Runs/Duration	Target Sample Volume
PM (lb/mmBtu)	1, 2, 3B, 4, 5*, 19	3 @ 2 hr	2 dscm (70.63 dscf)**
*In accordance with Table 5 of NESHAP Subpart UUUUU, the front-half temperature was set at 320° ± 25°F. **Sample volume from Table 2 of NESHAP Subpart UUUUU, doubled in accordance with §63.10005.			

Testing Location

The Huntington Unit #1 exhaust sampling location consists of a vertical, circular stack with four orthogonal sampling ports located at least six diameters downstream and two diameters upstream of the nearest flow disturbances. PM testing was performed across a grid of 12 points determined using EPA Method 1. See the schematic below.

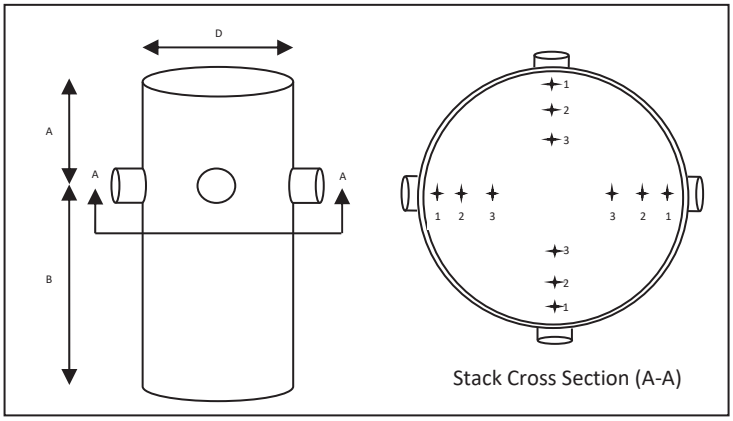

Huntington Test Diagram	
Unit #	**1**
Diameter (D)	323.3"
Upstream Distance (A)	>220'
Downstream Distance (B)	>266'
Sample Point Distances from Stack Wall	
Traverse Point 1	14.1"
Traverse Point 2	47.3"
Traverse Point 3	95.7"

Test Results

The results of the testing program are given in the tables below. Detailed test results are located in Appendix A, along with sample calculations for all computed values.

PacifiCorp
Huntington Unit 1
PM Compliance Test Results Summary (11/8/2016)

Parameter	Run #1	Run #2	Run #3	Average	QA Specification	Emission Limit***
Start Time	6:45	9:27	11:55	—	—	—
Stop Time	8:56	11:35	14:09	—	—	—
Sample Gas Volume (dscf)	77.42	77.41	79.07	**77.97**	**>70.63***	—
Isokinetic Variation (%)	98.5	97.7	99.9	**98.7**	**100 ± 10%**	—
Filterable PM (lb/mmBtu)	0.007	0.004	0.004	**0.005**	—	**0.030**
Boiler Load (MW)	481	482	482	**482**	**>468****	—
Filterable PM (lb/MW-hr)	0.07	0.05	0.04	**0.05**	—	**0.30**

* Sample volume from Table 2 of NESHAP Subpart UUUUU, doubled in accordance with §63.10005.
**90% of design capacity, in accordance with §63.10007(a)(2).
***As shown, average PM emissions were less than 50% of the applicable emission limit, qualifying the unit for Low Emitting EGU (LEE) status.

Testing Equipment

All testing equipment was housed in a climate-controlled mobile analytical laboratory designed and built by EMCo. All required quality assurance tests were performed as required by the applicable Reference Methods. Detailed equipment descriptions are given in the table below.

Parameter	Equipment	EPA Reference Method(s)
Particulate Matter (PM)	Heated probe with stainless steel nozzle and probe liner Quartz fiber filter S-type pitot tube K-type thermocouple Inclined-vertical manometer Dry gas meter Digital scale Analytical balance	1, 2, 3B, 4, 5, 19

Test Details

Particulate matter testing was performed using EPA Methods 1, 2, 3B, 4 and 5. Each test run was 120 minutes in duration. Sampling was performed along a grid of points determined using EPA Method 1. Exhaust gas flow measurements were taken using an S-type pitot tube, K-type thermocouple and inclined-vertical manometer in accordance with EPA Method 2. A sample of exhaust gas was withdrawn from the stack at an isokinetic flow rate through a heated stainless steel nozzle and probe, through a heated quartz-fiber filter, through four chilled glass impingers containing known masses of water or silica gel, and through a dry gas meter. (See Figure 5-1 at right.) The default dry molecular weight for combustion sources (30 lbs/lb-mole) listed in EPA Method 3 was combined with pressure and temperature measurements to calculate stack gas velocity in accordance with EPA Method 2. Stack gas moisture concentrations were determined gravimetrically in accordance with EPA Method 4. Following each sampling period, the filter and rinses of the nozzle and probe were recovered and returned to EMCo's laboratory for gravimetric analysis. Following analysis, the particulate mass captured during each test run was combined with concurrent flow and moisture data to calculate particulate matter emissions in units of pounds per hour (lb/hr). The particulate mass captured during each test run was combined with concurrent CO_2 concentration data from the plant CEMS[1] and the appropriate fuel F-factor from EPA Method 19 (1,840 scf/mmBtu) to calculate PM emissions in units of pounds per million British thermal units (lb/mmBtu) for comparison to the applicable emission limit.

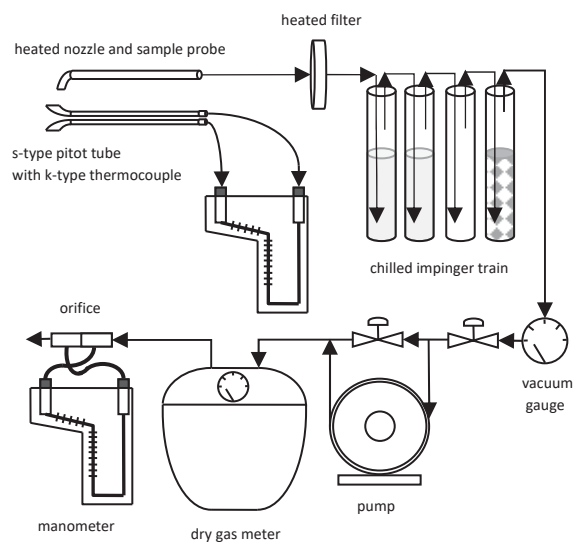

40 CFR Part 60, Appendix A: Method 5, Figure 5-1

[1] EPA Method 3B §6.0 states "As an alternative to the sampling apparatus and systems described herein, other sampling systems may be used, provided such systems are … capable of yielding acceptable results." As NESHAP UUUUU requires certified Part 75 CEMS CO_2 data to calculate SO_2 and mercury emissions in units of lb/mmBtu, CEMS CO_2 data are considered acceptable for PM emission calculations as well.

Appended Information

Supporting data for this testing program are included as follows.

Appendix A: Test Summary

- Data Reduction Spreadsheet
- Sample Calculations

Appendix B: Field Data

- Field Datasheets

Appendix C: CEMS Data

- Test Run CEMS Printouts

Appendix D: Laboratory Data

- Gravimetric Analysis

Appendix E: Calibration Information

- Dry Gas Meter Pre-Test and Post-Test Calibrations
- Critical Orifice Calibration Certificate
- AETB Certification

EMCO

EMISSIONS MEASUREMENT COMPANY

Project PC16-0001.19

Appendix A: Test Summary

Data Reduction Spreadsheets

Sample Calculations

PC16-1.19
PacifiCorp
Huntington Unit 1
11/8/2016

	Run #	**1**	**2**	**3**	
	Start Time	6:45	9:27	11:55	
	Stop Time	8:56	11:35	14:09	
Θ	**Sample Time (min.)**	120	120	120	

EPA Method 2 Data		**1**	**2**	**3**	**Average**
	Inputs				
D_s	Stack Diameter (inches)	323.3	323.3	323.3	**323.3**
P_{bar}	Barometric Pressure ("Hg)	23.7	23.7	23.7	**23.7**
P_g	Stack Static Pressure ("H_2O)	-2.4	-2.4	-2.4	**-2.4**
C_p	Pitot Tube Coefficient (unitless)	0.84	0.84	0.84	**0.84**
$\sqrt{\Delta p_{avg}}$	Avg. Velocity Head of Stack Gas √("H_2O)	0.8647	0.8753	0.8715	**0.8705**
T_s	Stack Gas Temperature (°F)	111	113	113	**112**
	Calculations				
A	Stack Area (ft^2)	570.084	570.084	570.084	**570.084**
P_g	Stack Static Pressure ("Hg)	-0.18	-0.18	-0.18	**-0.18**
M_d	Stack Gas Molecular Weight, dry basis (lb/lb-mole)	30.00	30.00	30.00	**30.00**
M_s	Stack Gas Molecular Weight, wet basis (lb/lb-mole)	28.65	28.63	28.66	**28.65**
P_s	Absolute Stack Pressure ("Hg)	23.52	23.52	23.52	**23.52**
$T_{s(abs)}$	Absolute Stack Gas Temperature (°R)	571	573	573	**572**
V_s	Stack Gas Velocity (ft/sec)	57.2	58.0	57.7	**57.6**
Q	Stack Gas Dry Volumetric Flow Rate (dscf/hr)	75,683,405	76,342,652	76,205,870	**76,077,309**
Q	Stack Gas Dry Volumetric Flow Rate (dscf/min)	1,261,390	1,272,378	1,270,098	**1,267,955**

CEMS Diluent Data	**1**	**2**	**3**	**Average**
CO_2 (%vw)	10.6	10.6	10.5	**10.6**
CO_2 (%vd)	11.9	12.0	11.8	**11.9**

EPA Method 4 Data		**1**	**2**	**3**	**Average**
	Inputs				
V_{lc}	Volume of Water Condensed (mL)	208.6	212.6	211.2	**210.8**
V_m	Volume of Stack Gas Collected (dcf)	97.720	97.889	100.359	**98.656**
Y	Meter Calibration Factor (unitless)	0.9966	0.9966	0.9966	**0.9966**
ΔH	Pressure Differential Across Orifice ("H_2O)	1.9	1.9	1.9	**1.9**
T_m	Temperature at Gas Meter (°F)	69	70	72	**70**
	Calculations				
P_m	Absolute Pressure at Gas Meter ("Hg)	23.84	23.84	23.84	**23.84**
T_m	Absolute Temperature at Gas Meter (°R)	529	530	532	**530.3**
$V_{wc(std)}$	Volume of Water Condensed (scf)	9.82	10.00	9.94	**9.92**
$V_{m(std)}$	Sample Gas Volume (dscf)	77.42	77.41	79.07	**77.97**
$B_{ws\ act}$	Observed Stack Gas Moisture Content (%/100)	0.113	0.114	0.112	**0.113**
$B_{ws\ sat}$	Saturated Moisture Content (%/100)	0.114	0.120	0.120	**0.118**
B_{ws}	Moisture Content Used (%/100)	0.113	0.114	0.112	**0.113**

EPA Method 5 Data		**1**	**2**	**3**	**Average**
	Inputs				
D_n	Nozzle diameter (")	0.233	0.233	0.233	**0.233**
C1	Mass of PM collected on filter (mg)	6.2	5.1	5.9	**5.7**
C2	Mass of PM collected in rinses (mg)	9.2	4.9	3.4	**5.8**
	Emission Calculations				
F_c	Fuel F-Factor (scf/mmBtu)	1800	1800	1800	**1800**
A_n	Cross-sectional area of nozzle (ft^2)	2.96E-04	2.96E-04	2.96E-04	**2.96E-04**
I	Isokinetic variation (%)	98.5	97.7	99.9	**98.7**
m_n	Total Filterable PM mass less blank (mg)	15.4	10.0	9.3	**11.6**
C_s	Filterable Particulate concentration (gr/dscf)	0.003	0.002	0.002	**0.002**
C_s	Filterable Particulate concentration (lb/dscf)	4.39E-07	2.85E-07	2.59E-07	**3.28E-07**
$E_{lb/hr}$	Filterable Particulate mass emission rate (lb/hr)	33	22	20	**25**
	Boiler Load (MW)	481	482	482	**482**
	Filterable Particulate mass emission rate (lb/MW-hr)	0.07	0.05	0.04	**0.05**
F_c	Filterable Particulate mass emission rate (lb/mmBtu)	0.007	0.004	0.004	**0.005**
8760 hrs/yr	Filterable Particulate mass emission rate (tons/year)	145	95	87	**109**

Sample Calculations

PC16-1.19
PacifiCorp
Huntington Unit 1
Run #1 Sample Calculations

EPA Method 5: Determination of Particulate Matter Emissions (40 CFR Part 60, Appendix A-1)

Variables

Variable	Value	Definition	Unit of Measurement
D_s	323.3	Stack Diameter	inches
A	570.08	Cross-Sectional Area of the Stack	ft^2
P_g	-2.40	Stack Static Pressure	in. H_2O
P_g	-0.18	Stack Static Pressure	in. Hg
$\%CO_2$	11.9	Concentration of Carbon Dioxide	Dry Volume Percent (%vd)
M_d	30.00	Dry Molecular Weight of the Stack Gas (default)	lb/lb-mole
P_{bar}	23.70	Barometric Pressure	in. Hg
ΔH	1.90	Pressure Differential across Orifice	in. H_2O
P_m	23.84	Absolute Pressure at Gas Meter	in.Hg
t_m	69	Temperature at Gas Meter	°F
T_m	529	Absolute Temperature at Gas Meter	°R
K1	0.04706	Conversion Factor	ft^3/mL
V_{lc}	208.6	Volume of Water Condensed	g
$V_{wc(std)}$	9.82	Volume of Water Condensed	scf
K_4	17.64	Constant	°R/in.Hg
Y	0.9966	Meter Calibration Factor	Unitless
V_m	97.72	Volume of Stack Gas Collected	dcf
$V_{m(std)}$	77.419	Sample Gas Volume	dscf
B_{ws}	0.113	Stack Gas Moisture Content	%/100
M_s	28.65	Actual Molecular Weight of the Stack Gas	lb/lb-mole
P_s	23.52	Absolute Stack Pressure	in. Hg
T_s	111	Average Stack Temperature	°F
$T_{s(abs)}$	571	Average Absolute Stack Temperature	°R
Kp	85.49	Conversion Factor	(ft/sec) x √(((lb/lb-mole)(in.Hg))/((°R)(in.H_2O)))
C_p	0.84	Pitot Coefficient	Dimensionless
AvgVΔp	0.8647	Average Square Root of Velocity Head Readings	in. H_2O
V_s	57.16	Average Stack Gas Velocity	ft/sec
T_{std}	528	Standard Absolute Temperature	°R
P_{std}	29.92	Standard Absolute Pressure	in. Hg
Q	75,683,405	Dry Volumetric Flow Rate Corrected to Standard Conditions	dscf/hr
D_n	0.233	Nozzle Diameter	inches
A_n	2.96E-04	Cross-Sectional Area of the Nozzle	ft^2
m_n	15.4	Total PM Mass	mg
C_s	4.39E-07	Particulate Concentration	lb/dscf
$E_{lb/hr}$	33.2	PM Mass Emission Rate	pounds per hour
F_c	1800	F-Factor from EPA Method 19	scf/mmBtu
$E_{lb/mmBtu}$	0.007	PM Mass Emission Rate	pounds per million Btu
$E_{tons/yr}$	145.4	PM Mass Emission Rate	tons per year
K5	0.0945	Constant	(in.Hg · min) / (°R · sec)
Θ	120	Sample Time	minutes
I	98.5 %	Isokinetic variation	percent

EPA Method 5: Determination of Particulate Matter Emissions (40 CFR Part 60, Appendix A-1)

A= $\pi(D_s/24)^2$
$\pi(323.3/24)$^2
= **570.08 ft^2**

P_g = $P_g/13.6$
= -2.4/13.6
= **-0.18 in. Hg**

M_d = 30.00 lb/lb-mole

P_m = $P_{bar} + (\Delta H/13.6)$
= 23.7 + (1.9/13.6)
= **23.84 in. Hg**

T_m = $460 + t_m$
= 460 + 69
= **529 R**

$V_{wc(std)}$ = $K_1 \times V_{lc}$
= 0.04706 x 208.6
= **9.82 scf** *(Eq. 4-1)*

$V_{m(std)}$= $\dfrac{K_4 \times Y \times V_m \times P_m}{T_m}$

= $\dfrac{17.64 \times 0.9966 \times 97.72 \times 23.84}{529}$
= **77.42 dscf** *(Eq. 4-3)*

B_{ws}= $\dfrac{V_{wc(std)}}{V_{wc(std)} + V_{m(std)}}$

= $\dfrac{9.82}{9.82 + 77.42}$

= **0.113 (%/100)** *(Eq. 4-4)*

M_s = $M_d \times (1-B_{ws}) + (18.0 \times B_{ws})$
= 30.00 x (1 - 0.113) + (18.0 x 0.113)
= **28.65 lb/lb-mole** *(Eq. 2-6)*

P_s= $P_{bar} + P_g$
= 23.7 + (-0.18)
= **23.52 in. Hg**

$T_{s(abs)}$ = $460 + T_s$
= 460 + 111
= **571 R**

PC16-1.19
PacifiCorp
Huntington Unit 1
Run #1 Sample Calculations

EPA Method 5: Determination of Particulate Matter Emissions (40 CFR Part 60, Appendix A-1)

$$V_s = K_p \times C_p \times Avg\sqrt{\Delta p} \times \sqrt{\frac{T_{s(abs)}}{(P_s \times M_s)}}$$

$$= 85.49 \times 0.84 \times 0.8647 \times \sqrt{\frac{571}{(23.52 \times 28.65)}}$$

= **57.2 ft/sec** *(Eq. 2-7)*

$$Q = 3600 \times (1-B_{ws}) \times (V_s) \times (A) \times \frac{(T_{std} \times P_s)}{(T_{s(abs)} \times P_{std})}$$

$$= 3600 \times (1 - 0.113) \times (57.16) \times (570.08) \times \frac{(528 \times 23.52)}{(571 \times 29.92)}$$

= **75,683,405 dscf/hr** *(Eq. 2-8)*

$$A_n = \pi(D_n/24)^2$$

π(0.233/24)^2

= **2.96E-04 ft^2**

$$C_s = \frac{m_n}{(mg/g)\ (g/lb)\ (V_{m(std)})}$$

$$= \frac{15.4}{(1000)\ (453.592)\ (77.419)}$$

= **4.39E-07 lb/dscf**

$$E_{lb/hr} = C_s \times Q$$

= 4.39E-07 x 75683405

= **33.2 lb/hr**

$$E_{lb/mmBtu} = \frac{C_s \times F_c \times 100}{(CO_2\%vd)}$$

$$= \frac{4.39E\text{-}07 \times 1800 \times 100}{(11.9)}$$

= **0.007 lb/mmBtu**

$$E_{tons/yr} = \frac{E_{lb/hr} \times (Hrs/yr)}{(lbs/ton)}$$

$$= \frac{33.19 \times 8{,}760}{2000}$$

= **145.4 tons/year**

$$I = \frac{K5 \times T_{s(abs)} \times V_{m(std)} \times 100}{P_{s(abs)} \times V_s \times A_n \times \Theta \times (1-B_{ws})}$$

$$= \frac{0.0945 \times 571 \times 77.419 \times 100}{23.52 \times 57.16 \times 3.0E\text{-}04 \times 120 \times (1 - 0.113)}$$

= **98.5 %**

(Eq. 5-7)

EMCO
EMISSIONS MEASUREMENT COMPANY

Project PC16-0001.19

Appendix B: Field Data

Field Datasheets

Emissions Measurement Company: Method 5/202 Data Sheet

EMCo Job #:	PC 16-Q4	Operator(s):	WS/CW
Client:	Pacificorp	Barometric pressure ("Hg):	23.7
Source:	Hntgtn 1	Static pressure ("H_2O):	-2.4
Date:	11/8/16	Leak Check ("H_2O @ Vac):	0.00 @ 16"
Run #	1	Leak Check ("H_2O @ Vac):	0.00 @ 17"
Meterbox ID:	MS-1	Pitot ID / Coeff:	0.84
Meterbox Y = 0.9966 ΔH@=	1.8624	Pitot Leak Check:	✓
O_2%:	7.1	Nozzle Diameter:	0.233
CO_2%:	12.0	K Factor:	2.50
Start Time	645	Stop Time	856

Impinger Weights (x.x g)	Initial	Final
Impinger 1		
Impinger 2		
Impinger 3		
Impinger 4 (SG)		
Total		
Total		208.6

233
233
233
233

Traverse Point	Sample Time	Stack Temp (°F)	Probe Temp (°F)	Filter Temp (°F)	Velocity Δp ("H_2O)	Orifice Pressure ΔH ("H_2O)	Vacuum ("Hg)	Sample Volume (ft^3)	DGM Temp (°F) Inlet	DGM Temp (°F) Outlet	CPM Filter Temp (°F)	Imp. Outlet Temp (°F)
								825.834				
1-1	10	112	320	320	0.59	1.5	8	833.4	62	60	65	57
2	20	112	320	320	0.82	2.1	9	841.9	64	61	66	58
3	30	111	322	319	0.86	2.1	9	850.3	69	63	69	60
2-1	40	111	320	320	0.63	1.6	8	857.6	71	65	68	56
2	50	111	320	320	0.82	2.1	10	866.2	72	66	69	58
3	60	111	319	321	0.87	2.2	10	874.7	73	67	68	60
3-1	70	111	319	320	0.62	1.6	8	882.3	74	68	67	59
2	80	111	319	320	0.80	2.0	10	890.4	76	69	68	60
3	90	111	318	320	0.82	2.1	11	899.2	76	69	68	61
4-1	100	111	318	320	0.59	1.5	8	906.6	75	70	66	58
2	110	111	318	320	0.76	1.9	10	915.8	77	70	68	60
3	120	111	319	320	0.84	2.1	11	923.554	77	71	68	62
12	120	111	318	319	0.8647	1.9	11	97.720	69		68	62
Total	Total	Average	Minimum	Minimum	Avg √Δp	Average	Max.	Total	Average		Average	Maximum

Emissions Measurement Company: Method 5/202 Data Sheet

EMCo Job #:	PC16-Q4	Operator(s):	CW/WS
Client:	Pacificorp	Barometric pressure ("Hg):	23.7
Source:	Huntgtn 1	Static pressure ("H_2O):	-2.4
Date:	11/8/16	Leak Check ("H_2O @ Vac):	0.00 @ 15"
Run #	2	Leak Check ("H_2O @ Vac):	0.00 @ 15"
Meterbox ID:	MS-1	Pitot ID / Coeff:	0.84
Meterbox Y = 0.9966	ΔH@= 1.8624	Pitot Leak Check:	✓
O_2%:	7.1	Nozzle Diameter:	0.233
CO_2%:	12.0	K Factor:	~~2.48~~ 2.5
Start Time	927	Stop Time	1135

Impinger Weights (x.x g)	Initial	Final
Impinger 1		
Impinger 2		
Impinger 3		
Impinger 4 (SG)		
Total		
Total		212.0

Traverse Point	Sample Time	Stack Temp (°F)	Probe Temp (°F)	Filter Temp (°F)	Velocity Δp ("H_2O)	Orifice Pressure ΔH ("H_2O)	Vacuum ("Hg)	Sample Volume (ft^3)	DGM Temp (°F) Inlet	DGM Temp (°F) Outlet	CPM Filter Temp (°F)	Imp. Outlet Temp (°F)
								923.821				
1 1	10	113	319	317	0.65	1.6	~~7~~ 6	931.4	71	67	66	52
2	20	113	319	320	0.83	2.1	8	939.9	72	67	67	54
3	30	112	320	320	0.89	2.2	8	948.7	70	72	67	63
2 1	40	113	320	320	0.64	1.6	6	956.2	72	66	68	62
2	50	112	318	320	0.80	2.0	8	964.6	73	66	68	61
3	60	112	319	320	0.84	2.1	8	974.0	73	66	66	60
3 1	70	112	319	320	0.62	1.6	6	980.9	72	67	67	59
2	80	113	320	319	0.79	2.0	8	989.2	74	67	67	60
3	90	113	320	319	0.85	2.1	8	997.9	74	67	68	61
4 1	100	113	318	321	0.65	1.6	6	005.2	73	67	70	62
2	110	113	319	321	0.81	2.0	8	13.1	74	67	71	61
3	120	113	320	320	0.86	2.2	8	~~21.882~~	74	67	71	62
								21.710				
12	120	113	318	317	0.8753	1.925	8	97.8890	70		68	63
Total	Total	Average	Minimum	Minimum	Avg √Δp	Average	Max.	Total	Average		Average	Maximum

Emissions Measurement Company: Method 5/202 Data Sheet

EMCo Job #:	PC-16-Q4	Operator(s):	WS, CK
Client:	Pouthcorp	Barometric pressure ("Hg):	23.7
Source:	Htg 1	Static pressure ("H_2O):	-2.4
Date:	11/8/16	Leak Check ("H_2O @ Vac):	00.0@15"
Run #	3	Leak Check ("H_2O @ Vac):	0.00@15"
Meterbox ID:	M5-1	Pitot ID / Coeff:	0.84
Meterbox Y =	.9966 ΔH@= 1.8624	Pitot Leak Check:	✓
O_2%:	7.1	Nozzle Diameter:	0.233
CO_2%:	12.0	K Factor:	2.5
Start Time	1155	Stop Time	1409

Impinger Weights (x.x g)	Initial	Final
Impinger 1		
Impinger 2		
Impinger 3		
Impinger 4 (SG)		
Total		
Total		211.2

Traverse Point	Sample Time	Stack Temp (°F)	Probe Temp (°F)	Filter Temp (°F)	Velocity Δp ("H_2O)	Orifice Pressure ΔH ("H_2O)	Vacuum ("Hg)	Sample Volume (ft^3)	DGM Temp (°F) Inlet	DGM Temp (°F) Outlet	CPM Filter Temp (°F)	Imp. Outlet Temp (°F)
								22.631				
1-1	10	113	318	320	0.61	1.5	6	29.9	70	66	69	54
-2	20	113	320	319	0.81	2.0	9	38.1	74	67	69	60
-3	30	113	319	320	0.86	2.2	9	46.8	75	67	74	60
2-1	40	113	320	319	0.63	1.6	7	54.5	75	68	77	61
-2	50	113	319	320	0.80	2.0	8	63.1	76	69	78	62
-3	60	113	318	320	0.87	2.3	9	68.6	76	69	78	61
3-1	70	113	319	320	0.63	1.6	7	76.5	76	69	77	60
-2	80	113	320	319	0.81	2.0	8	85.1	76	69	78	58
-3	90	112	319	318	0.87	2.3	9	94.4	76	70	78	55
4-1	100	113	319	320	0.61	1.5	7	103.9	76	70	79	57
-2	110	113	318	320	0.80	2.0	8	114.1	77	71	80	59
-3	120	113	320	319	0.86	2.2	9	122.990	77	71	79	60
12	120	113	318	318	0.8715	1.933	9	100.359	72		76	62
Total	Total	Average	Minimum	Minimum	Avg √Δp	Average	Max.	Total	Average		Average	Maximum

EMCO
EMISSIONS MEASUREMENT COMPANY

EPA Method 5/202 Moisture Datasheet

Job Code: PC16 - Q4 HTG 1
Date: 11-8-16
Operator: SS

Run # 1

Impinger	Tare Weight	Final Weight
Impinger 1	498.8	600.1
Impinger 2	690.9	703.5
Impinger 3	744.5	801.4
Impinger 4	955.7	993.5
Sum	2889.9	3098.6
Total Moisture Gain:		208.6

938

Run # 2

Impinger	Tare Weight	Final Weight
Impinger 1	488.3	530.8
Impinger 2	671.0	686.4
Impinger 3	771.3	879.4
Impinger 4	946.3	992.9
Sum	2876.9	3089.5
Total Moisture Gain:		212.6

1213

Run #

Impinger	Tare Weight	Final Weight
Impinger 1	501.4	506.0
Impinger 2	693.9	700.8
Impinger 3	742.0	888.4
Impinger 4	944.2	997.5
Sum	2881.5	3092.7
Total Moisture Gain:		211.2

1433

EMCO
EMISSIONS MEASUREMENT COMPANY

Project PC16-0001.19

Appendix C: CEMS Data

Test Run CEMS Printouts

Average Data

Plant: HUNTINGTON PLANT
Interval: 1 Minute
Type: Block
Report Period: 11/08/2016 06:45 Through 11/08/2016 08:56
Time Online Criteria: 1 minute(s

Source		UNIT1				
Parameter Unit		BARPRESS (INHG)	CO2 (PCT)	OPACITY (PCT)	STKTEMP (DEGF)	UNITLOAD (MW)
11/08/16	06:45	24.055	10.5	3.0	109.66	474
11/08/16	06:46	24.054	10.5	3.0	109.20	475
11/08/16	06:47	24.055	10.6	3.0	108.60	475
11/08/16	06:48	24.055	10.6	3.0	108.51	476
11/08/16	06:49	24.055	10.7	3.0	108.04	476
11/08/16	06:50	24.056	10.7	3.1	108.00	477
11/08/16	06:51	24.056	10.6	3.0	108.12	478
11/08/16	06:52	24.056	10.6	3.0	107.81	479
11/08/16	06:53	24.056	10.6	3.1	107.60	479
11/08/16	06:54	24.057	10.6	3.1	108.10	480
11/08/16	06:55	24.056	10.7	3.0	108.29	481
11/08/16	06:56	24.057	10.6	3.0	108.09	481
11/08/16	06:57	24.057	10.5	3.1	108.14	479
11/08/16	06:58	24.057	10.5	3.0	108.12	478
11/08/16	06:59	24.057	10.4	3.1	107.76	477
11/08/16	07:00	24.058	10.6	3.1	107.22	477
11/08/16	07:01	24.058	10.6	3.1	107.18	478
11/08/16	07:02	24.058	10.6	3.1	107.58	479
11/08/16	07:03	24.059	10.6	3.1	107.66	480
11/08/16	07:04	24.058	10.7	3.1	107.21	482
11/08/16	07:05	24.059	10.7	3.0	107.36	482
11/08/16	07:06	24.059	10.6	3.1	107.39	482
11/08/16	07:07	24.060	10.6	3.1	107.13	482
11/08/16	07:08	24.060	10.6	3.1	107.18	482
11/08/16	07:09	24.060	10.6	3.1	107.48	482
11/08/16	07:10	24.061	10.6	3.1	107.72	481
11/08/16	07:11	24.061	10.6	3.1	107.80	481
11/08/16	07:12	24.061	10.6	3.1	108.18	481
11/08/16	07:13	24.062	10.5	3.0	108.42	480
11/08/16	07:14	24.062	10.5	3.1	107.94	479
11/08/16	07:15	24.063	10.5	3.1	107.46	479
11/08/16	07:16	24.063	10.5	3.1	107.43	478
11/08/16	07:17	24.063	10.6	3.1	107.18	478
11/08/16	07:18	24.063	10.6	3.1	107.47	479
11/08/16	07:19	24.064	10.6	3.1	107.17	479
11/08/16	07:20	24.064	10.6	3.1	107.09	480
11/08/16	07:21	24.063	10.6	3.1	107.71	481
11/08/16	07:22	24.065	10.6	3.1	107.95	481
11/08/16	07:23	24.064	10.7	3.1	107.52	482

F = Unit Offline
E = Exceedance
M = Maintenance
T = Out Of Control

C = Calibration
S = Substituted
*** = Suspect**

Average Data

Plant: HUNTINGTON PLANT
Interval: 1 Minute
Type: Block
Report Period: 11/08/2016 06:45 Through 11/08/2016 08:56
Time Online Criteria: 1 minute(s

11/08/16	07:24	24.065	10.7	3.1	107.00	482
11/08/16	07:25	24.065	10.7	3.1	106.34	483
11/08/16	07:26	24.065	10.7	3.1	106.52	485
11/08/16	07:27	24.065	10.7	3.1	107.64	486
11/08/16	07:28	24.066	10.8	3.1	107.60	487
11/08/16	07:29	24.066	10.7	3.0	107.44	486
11/08/16	07:30	24.066	10.7	3.0	107.70	487
11/08/16	07:31	24.066	10.6	3.0	107.71	485
11/08/16	07:32	24.067	10.6	3.1	107.67	484
11/08/16	07:33	24.066	10.6	3.1	108.16	483
11/08/16	07:34	24.067	10.5	3.0	108.57	481
11/08/16	07:35	24.067	10.6	3.0	108.34	480
11/08/16	07:36	24.068	10.6	3.0	108.56	480
11/08/16	07:37	24.068	10.5	3.0	109.11	480
11/08/16	07:38	24.068	10.6	3.0	108.86	480
11/08/16	07:39	24.068	10.6	3.0	108.26	479
11/08/16	07:40	24.068	10.6	3.0	107.85	480
11/08/16	07:41	24.068	10.6	3.0	108.06	480
11/08/16	07:42	24.068	10.5	3.0	108.13	480
11/08/16	07:43	24.068	10.6	3.0	108.70	480
11/08/16	07:44	24.068	10.6	3.0	109.40	481
11/08/16	07:45	24.068	10.6	3.0	109.27	482
11/08/16	07:46	24.068	10.6	3.0	108.34	481
11/08/16	07:47	24.068	10.6	3.0	107.31	482
11/08/16	07:48	24.068	10.6	3.0	106.50	482
11/08/16	07:49	24.068	10.7	3.1	106.36	483
11/08/16	07:50	24.068	10.7	3.0	106.90	484
11/08/16	07:51	24.068	10.7	3.0	106.77	484
11/08/16	07:52	24.069	10.7	3.0	106.87	484
11/08/16	07:53	24.069	10.5	3.0	107.71	484
11/08/16	07:54	24.069	10.5	3.0	108.58	483
11/08/16	07:55	24.069	10.5	3.0	108.40	482
11/08/16	07:56	24.070	10.5	3.0	107.79	481
11/08/16	07:57	24.070	10.6	3.0	107.03	481
11/08/16	07:58	24.069	10.6	3.0	107.07	480
11/08/16	07:59	24.069	10.6	3.0	107.61	483
11/08/16	08:00	24.069	10.6	3.0	107.52	482
11/08/16	08:01	24.069	6.5 I	3.0	107.45	483
11/08/16	08:02	24.069	8.2 I	3.0	107.69	483
11/08/16	08:03	24.069	10.5 I	3.0	107.75	481
11/08/16	08:04	24.069	10.5 I	3.0	107.88	480
11/08/16	08:05	24.067	10.5	3.0	107.76	479

F = Unit Offline
E = Exceedance
M = Maintenance
T = Out Of Control

C = Calibration
S = Substituted
*** = Suspect**

Average Data

Plant: HUNTINGTON PLANT
Interval: 1 Minute
Type: Block
Report Period: 11/08/2016 06:45 Through 11/08/2016 08:56
Time Online Criteria: 1 minute(s

11/08/16	08:06	24.070	10.6	3.0	106.30	481
11/08/16	08:07	24.070	10.7	3.0	106.86	482
11/08/16	08:08	24.071	10.7	3.0	107.26	483
11/08/16	08:09	24.071	10.7	3.0	107.31	484
11/08/16	08:10	24.071	10.7	3.0	106.88	484
11/08/16	08:11	24.071	10.7	3.0	106.99	484
11/08/16	08:12	24.071	10.6	3.0	107.71	483
11/08/16	08:13	24.071	10.5	3.0	107.80	482
11/08/16	08:14	24.072	10.5	3.0	108.31	480
11/08/16	08:15	24.072	10.5	3.0	108.59	480
11/08/16	08:16	24.072	10.6	3.0	107.80	480
11/08/16	08:17	24.072	10.6	3.0	107.09	480
11/08/16	08:18	24.071	10.7	3.0	106.92	482
11/08/16	08:19	24.071	10.7	3.0	107.24	484
11/08/16	08:20	24.070	10.7	3.0	108.10	486
11/08/16	08:21	24.071	10.7	3.0	108.74	486
11/08/16	08:22	24.071	10.6	3.0	109.28	485
11/08/16	08:23	24.071	10.6	3.0	109.58	485
11/08/16	08:24	24.072	10.6	3.0	110.09	483
11/08/16	08:25	24.072	10.5	3.0	110.40	481
11/08/16	08:26	24.073	10.4	3.0	110.55	479
11/08/16	08:27	24.073	10.5	3.0	110.38	479
11/08/16	08:28	24.073	10.5	3.0	110.22	479
11/08/16	08:29	24.073	10.5	3.0	110.24	479
11/08/16	08:30	24.074	10.6	3.0	110.20	480
11/08/16	08:31	24.075	10.6	3.0	110.11	481
11/08/16	08:32	24.075	10.6	3.0	109.96	482
11/08/16	08:33	24.075	10.6	3.0	110.00	483
11/08/16	08:34	24.076	10.6	3.0	109.62	484
11/08/16	08:35	24.076	10.7	3.0	109.12	486
11/08/16	08:36	24.076	10.8	3.0	109.35	487
11/08/16	08:37	24.077	10.7	3.0	110.12	486
11/08/16	08:38	24.076	10.6	3.0	110.36	485
11/08/16	08:39	24.077	10.5	3.0	110.39	482
11/08/16	08:40	24.077	10.5	3.0	110.17	481
11/08/16	08:41	24.077	10.6	3.0	109.86	480
11/08/16	08:42	24.077	10.5	3.0	109.98	479
11/08/16	08:43	24.077	10.5	3.0	110.17	477
11/08/16	08:44	24.077	10.5	3.0	109.79	478
11/08/16	08:45	24.077	10.6	3.0	109.28	480
11/08/16	08:46	24.077	10.8	3.0	108.60	482
11/08/16	08:47	24.078	10.8	3.0	108.13	483

F = Unit Offline
E = Exceedance
M = Maintenance
T = Out Of Control

C = Calibration
S = Substituted
*** = Suspect**

Average Data

Plant: HUNTINGTON PLANT
Interval: 1 Minute
Type: Block
Report Period: 11/08/2016 06:45 Through 11/08/2016 08:56
Time Online Criteria: 1 minute(s

11/08/16	08:48	24.078	10.7	3.0	108.60	483
11/08/16	08:49	24.077	10.6	3.0	108.88	483
11/08/16	08:50	24.078	10.6	3.0	108.79	483
11/08/16	08:51	24.078	10.6	3.0	108.84	481
11/08/16	08:52	24.078	10.5	3.0	109.09	479
11/08/16	08:53	24.078	10.5	3.0	109.38	479
11/08/16	08:54	24.078	10.5	3.0	109.38	479
11/08/16	08:55	24.078	10.6	3.0	109.48	478
11/08/16	08:56	24.078	10.6	3.0	109.18	479

Average	24.068	10.6	3.0	108.24	481
Minimum	24.054	10.4	3.0	106.30	474
Maximum	24.078	10.8	3.1	110.55	487
Summation	3,176.942	1,356.9	399.5	14,288.12	63,514
Included Data Points	132	128	132	132	132
Total number of Data Points	132	132	132	132	132

F = Unit Offline
E = Exceedance
M = Maintenance
T = Out Of Control

C = Calibration
S = Substituted
*** = Suspect**

Average Data

Plant: HUNTINGTON PLANT
Interval: 1 Minute
Type: Block
Report Period: 11/08/2016 09:27 Through 11/08/2016 11:35
Time Online Criteria: 1 minute(s

Source		UNIT1				
Parameter Unit		BARPRESS (INHG)	CO2 (PCT)	OPACITY (PCT)	STKTEMP (DEGF)	UNITLOAD (MW)
11/08/16	09:27	24.078	10.7	3.0	110.57	484
11/08/16	09:28	24.078	10.6	3.0	110.75	483
11/08/16	09:29	24.078	10.6	3.0	110.55	483
11/08/16	09:30	24.078	10.6	3.0	110.18	481
11/08/16	09:31	24.078	10.6	3.0	110.12	480
11/08/16	09:32	24.078	10.5	3.0	110.03	480
11/08/16	09:33	24.078	10.6	3.0	109.52	480
11/08/16	09:34	24.078	10.7	3.0	109.28	481
11/08/16	09:35	24.078	10.7	3.0	109.32	482
11/08/16	09:36	24.078	10.6	3.0	110.01	482
11/08/16	09:37	24.078	10.6	3.0	109.71	482
11/08/16	09:38	24.078	10.6	3.0	109.74	482
11/08/16	09:39	24.078	10.7	3.0	109.74	481
11/08/16	09:40	24.078	10.7	3.0	109.20	482
11/08/16	09:41	24.077	10.7	3.0	108.81	483
11/08/16	09:42	24.077	10.8	3.0	108.56	485
11/08/16	09:43	24.077	10.8	3.0	108.65	487
11/08/16	09:44	24.077	10.8	3.0	109.02	487
11/08/16	09:45	24.077	10.7	3.0	109.52	487
11/08/16	09:46	24.077	10.6	3.0	110.04	485
11/08/16	09:47	24.077	10.6	3.0	109.88	483
11/08/16	09:48	24.077	10.6	3.0	109.90	481
11/08/16	09:49	24.077	10.5	3.0	110.04	480
11/08/16	09:50	24.076	10.5	3.0	109.68	480
11/08/16	09:51	24.077	10.6	3.0	109.15	480
11/08/16	09:52	24.077	10.6	3.0	108.37	481
11/08/16	09:53	24.077	10.7	3.0	108.87	480
11/08/16	09:54	24.077	10.7	3.0	109.70	480
11/08/16	09:55	24.077	10.6	3.0	109.95	480
11/08/16	09:56	24.077	10.6	3.0	109.63	480
11/08/16	09:57	24.077	10.7	3.0	109.48	480
11/08/16	09:58	24.077	10.6	3.0	109.45	480
11/08/16	09:59	24.076	10.6	3.0	108.95	480
11/08/16	10:00	24.078	10.7	3.0	108.30	481
11/08/16	10:01	24.077	10.7	3.0	108.41	482
11/08/16	10:02	24.078	10.8	3.0	109.18	483
11/08/16	10:03	24.078	10.8	3.0	109.30	485
11/08/16	10:04	24.078	10.7	3.0	109.46	485
11/08/16	10:05	24.078	10.7	3.0	109.49	484

F = Unit Offline
E = Exceedance
M = Maintenance
T = Out Of Control

C = Calibration
S = Substituted
*** = Suspect**

Average Data

Plant: HUNTINGTON PLANT
Interval: 1 Minute
Type: Block
Report Period: 11/08/2016 09:27 Through 11/08/2016 11:35
Time Online Criteria: 1 minute(s

11/08/16	10:06	24.078	10.6	3.0	110.01	483
11/08/16	10:07	24.078	10.6	3.0	109.72	481
11/08/16	10:08	24.078	10.6	3.0	109.83	480
11/08/16	10:09	24.078	10.6	3.0	109.97	479
11/08/16	10:10	24.078	10.6	3.0	110.10	480
11/08/16	10:11	24.078	10.7	3.0	109.54	481
11/08/16	10:12	24.078	10.7	3.0	109.32	482
11/08/16	10:13	24.078	10.8	3.0	109.21	483
11/08/16	10:14	24.078	10.8	3.0	109.15	484
11/08/16	10:15	24.078	10.7	3.0	109.34	484
11/08/16	10:16	24.078	10.7	3.0	109.95	484
11/08/16	10:17	24.078	10.6	3.0	110.15	483
11/08/16	10:18	24.078	10.7	3.0	110.07	482
11/08/16	10:19	24.078	10.7	3.0	110.08	483
11/08/16	10:20	24.078	10.7	3.0	110.22	482
11/08/16	10:21	24.077	10.7	3.0	110.31	483
11/08/16	10:22	24.077	10.6	3.0	110.02	483
11/08/16	10:23	24.077	10.7	3.0	109.40	483
11/08/16	10:24	24.076	10.7	3.0	109.16	483
11/08/16	10:25	24.076	10.6	3.0	109.53	482
11/08/16	10:26	24.076	10.6	3.0	109.77	482
11/08/16	10:27	24.076	10.6	3.0	109.79	482
11/08/16	10:28	24.075	10.7	3.0	110.16	482
11/08/16	10:29	24.075	10.7	3.0	110.22	483
11/08/16	10:30	24.075	10.7	3.0	110.14	484
11/08/16	10:31	24.075	10.7	3.0	110.20	485
11/08/16	10:32	24.075	10.7	3.0	110.21	486
11/08/16	10:33	24.075	10.7	3.0	110.12	486
11/08/16	10:34	24.075	10.7	3.0	110.08	486
11/08/16	10:35	24.075	10.7	3.0	110.26	486
11/08/16	10:36	24.076	10.6	3.0	110.39	485
11/08/16	10:37	24.076	10.6	3.0	110.42	484
11/08/16	10:38	24.075	10.7	3.0	110.64	483
11/08/16	10:39	24.075	10.6	3.0	110.89	483
11/08/16	10:40	24.075	10.5	3.0	110.85	482
11/08/16	10:41	24.075	10.6	3.0	110.78	482
11/08/16	10:42	24.075	10.5	3.0	110.77	481
11/08/16	10:43	24.075	10.5	3.0	110.87	480
11/08/16	10:44	24.075	10.5	3.0	110.35	480
11/08/16	10:45	24.075	10.6	3.0	110.61	481
11/08/16	10:46	24.075	10.6	3.0	110.89	481
11/08/16	10:47	24.076	10.5	3.0	110.86	481

F = Unit Offline
E = Exceedance
M = Maintenance
T = Out Of Control

C = Calibration
S = Substituted
*** = Suspect**

Average Data

Plant: HUNTINGTON PLANT
Interval: 1 Minute
Type: Block
Report Period: 11/08/2016 09:27 Through 11/08/2016 11:35
Time Online Criteria: 1 minute(s

11/08/16	10:48	24.076	10.5	3.0	110.60	481
11/08/16	10:49	24.076	10.6	3.0	110.54	480
11/08/16	10:50	24.076	10.6	3.0	110.58	481
11/08/16	10:51	24.076	10.6	3.0	110.53	482
11/08/16	10:52	24.077	10.7	3.0	110.46	482
11/08/16	10:53	24.077	10.7	3.0	110.11	483
11/08/16	10:54	24.077	10.7	3.0	110.51	484
11/08/16	10:55	24.077	10.7	3.0	110.71	485
11/08/16	10:56	24.077	10.7	3.0	110.94	486
11/08/16	10:57	24.077	10.7	3.0	111.07	485
11/08/16	10:58	24.077	10.6	3.0	111.21	485
11/08/16	10:59	24.077	10.5	3.0	111.02	483
11/08/16	11:00	24.077	10.5	3.0	111.05	481
11/08/16	11:01	24.077	10.5	3.0	111.39	480
11/08/16	11:02	24.077	10.5	3.0	111.57	481
11/08/16	11:03	24.076	10.5	3.0	111.42	481
11/08/16	11:04	24.076	10.5	3.0	111.39	481
11/08/16	11:05	24.076	10.5	3.0	111.55	481
11/08/16	11:06	24.076	10.6	3.0	111.42	482
11/08/16	11:07	24.076	10.7	3.0	111.02	482
11/08/16	11:08	24.076	10.7	3.0	111.01	482
11/08/16	11:09	24.076	10.7	3.0	111.29	484
11/08/16	11:10	24.076	10.6	3.0	111.30	484
11/08/16	11:11	24.076	10.6	3.0	111.24	484
11/08/16	11:12	24.076	10.5	3.0	111.43	484
11/08/16	11:13	24.076	10.5	3.0	111.42	483
11/08/16	11:14	24.076	10.6	3.0	111.16	483
11/08/16	11:15	24.076	10.7	3.0	111.34	481
11/08/16	11:16	24.076	10.5	3.0	111.70	480
11/08/16	11:17	24.077	10.5	3.0	112.05	480
11/08/16	11:18	24.077	10.5	3.0	112.07	480
11/08/16	11:19	24.077	10.5	3.0	111.86	480
11/08/16	11:20	24.077	10.5	3.0	111.57	480
11/08/16	11:21	24.076	10.5	3.0	111.45	481
11/08/16	11:22	24.076	10.6	3.0	111.41	482
11/08/16	11:23	24.076	10.6	3.0	111.39	482
11/08/16	11:24	24.076	10.6	3.0	111.46	483
11/08/16	11:25	24.075	10.6	3.0	111.57	483
11/08/16	11:26	24.075	10.5	3.0	111.56	484
11/08/16	11:27	24.074	10.6	3.0	111.49	483
11/08/16	11:28	24.074	10.6	3.0	111.53	483
11/08/16	11:29	24.073	10.6	3.0	111.63	483

F = Unit Offline
E = Exceedance
M = Maintenance
T = Out Of Control

C = Calibration
S = Substituted
*** = Suspect**

Average Data

Plant: HUNTINGTON PLANT
Interval: 1 Minute
Type: Block
Report Period: 11/08/2016 09:27 Through 11/08/2016 11:35
Time Online Criteria: 1 minute(s

11/08/16	11:30	24.073	10.7	3.0	111.57	483
11/08/16	11:31	24.073	10.7	3.0	111.62	483
11/08/16	11:32	24.073	10.7	3.0	111.80	483
11/08/16	11:33	24.073	10.5	3.0	111.70	483
11/08/16	11:34	24.072	10.5	3.0	111.56	482
11/08/16	11:35	24.072	10.6	3.0	111.34	483

Average	24.076	10.6	3.0	110.36	482
Minimum	24.072	10.5	3.0	108.30	479
Maximum	24.078	10.8	3.0	112.07	487
Summation	3,105.862	1,370.7	387.0	14,236.47	62,224
Included Data Points	129	129	129	129	129
Total number of Data Points	129	129	129	129	129

F = Unit Offline
E = Exceedance
M = Maintenance
T = Out Of Control

C = Calibration
S = Substituted
*** = Suspect**

Average Data

Plant: HUNTINGTON PLANT
Interval: 1 Minute
Type: Block
Report Period: 11/08/2016 11:55 Through 11/08/2016 14:09
Time Online Criteria: 1 minute(s

Source		UNIT1				
Parameter Unit		BARPRESS (INHG)	CO2 (PCT)	OPACITY (PCT)	STKTEMP (DEGF)	UNITLOAD (MW)
11/08/16	11:55	24.064	10.4	3.0	112.77	479
11/08/16	11:56	24.064	10.4	3.0	112.83	478
11/08/16	11:57	24.063	10.5	3.0	112.58	479
11/08/16	11:58	24.063	10.5	3.0	112.08	479
11/08/16	11:59	24.063	10.5	3.0	111.96	480
11/08/16	12:00	24.063	10.6	3.0	112.15	480
11/08/16	12:01	24.062	6.6 I	3.0	112.20	481
11/08/16	12:02	24.061	8.4 I	3.0	112.12	481
11/08/16	12:03	24.062	10.5 I	3.0	112.14	481
11/08/16	12:04	24.061	10.5 I	3.0	112.07	481
11/08/16	12:05	24.061	10.5	3.0	111.83	481
11/08/16	12:06	24.060	10.5	3.0	111.61	481
11/08/16	12:07	24.060	10.6	3.0	111.49	482
11/08/16	12:08	24.059	10.6	3.0	111.32	483
11/08/16	12:09	24.059	10.7	3.0	111.10	486
11/08/16	12:10	24.058	10.8	3.0	111.16	488
11/08/16	12:11	24.058	10.8	3.0	111.57	489
11/08/16	12:12	24.057	10.6	3.0	112.22	488
11/08/16	12:13	24.057	10.4	3.0	112.12	486
11/08/16	12:14	24.056	10.5	3.0	111.92	483
11/08/16	12:15	24.055	10.4	3.0	111.78	480
11/08/16	12:16	24.055	10.4	3.0	111.78	480
11/08/16	12:17	24.055	10.4	3.0	111.54	478
11/08/16	12:18	24.055	10.5	3.0	111.99	478
11/08/16	12:19	24.054	10.4	3.0	111.91	478
11/08/16	12:20	24.054	10.4	3.0	111.72	478
11/08/16	12:21	24.054	10.4	3.0	111.55	478
11/08/16	12:22	24.053	10.5	3.0	111.62	479
11/08/16	12:23	24.053	10.6	3.0	111.32	480
11/08/16	12:24	24.052	10.6	3.0	111.50	481
11/08/16	12:25	24.052	10.6	3.0	111.89	482
11/08/16	12:26	24.051	10.5	3.0	111.64	482
11/08/16	12:27	24.051	10.5	3.0	111.48	482
11/08/16	12:28	24.050	10.5	3.0	111.52	482
11/08/16	12:29	24.050	10.6	3.0	111.41	483
11/08/16	12:30	24.049	10.6	3.0	111.26	482
11/08/16	12:31	24.049	10.5	3.0	111.27	483
11/08/16	12:32	24.048	10.6	3.0	111.25	483
11/08/16	12:33	24.048	10.6	3.0	111.38	483

F = Unit Offline
E = Exceedance
M = Maintenance
T = Out Of Control

C = Calibration
S = Substituted
*** = Suspect**

Average Data

Plant: HUNTINGTON PLANT
Interval: 1 Minute
Type: Block
Report Period: 11/08/2016 11:55 Through 11/08/2016 14:09
Time Online Criteria: 1 minute(s

11/08/16	12:34	24.048	10.5	3.0	111.49	483
11/08/16	12:35	24.047	10.5	3.0	111.48	484
11/08/16	12:36	24.046	10.6	3.0	111.51	483
11/08/16	12:37	24.046	10.5	3.0	111.65	483
11/08/16	12:38	24.045	10.5	3.0	111.74	483
11/08/16	12:39	24.045	10.6	3.0	111.76	484
11/08/16	12:40	24.045	10.6	3.0	111.86	484
11/08/16	12:41	24.045	10.6	3.0	111.80	484
11/08/16	12:42	24.044	10.6	3.0	111.83	483
11/08/16	12:43	24.044	10.4	3.0	111.97	482
11/08/16	12:44	24.044	10.4	3.1	112.03	479
11/08/16	12:45	24.044	10.4	3.0	112.24	478
11/08/16	12:46	24.043	10.5	3.0	112.14	477
11/08/16	12:47	24.043	10.5	3.0	111.73	477
11/08/16	12:48	24.042	10.5	3.0	111.39	479
11/08/16	12:49	24.042	10.6	3.0	111.37	481
11/08/16	12:50	24.042	10.6	3.1	111.50	483
11/08/16	12:51	24.042	10.7	3.1	111.31	485
11/08/16	12:52	24.041	10.8	3.1	111.05	486
11/08/16	12:53	24.041	10.8	3.1	111.22	486
11/08/16	12:54	24.041	10.6	3.1	111.57	485
11/08/16	12:55	24.041	10.5	3.1	111.68	483
11/08/16	12:56	24.041	10.5	3.0	111.72	482
11/08/16	12:57	24.040	10.5	3.0	111.85	481
11/08/16	12:58	24.041	10.5	3.0	111.76	479
11/08/16	12:59	24.041	10.5	3.1	111.67	480
11/08/16	13:00	24.041	10.6	3.0	111.39	480
11/08/16	13:01	24.040	10.6	3.1	111.26	481
11/08/16	13:02	24.040	10.6	3.1	111.33	482
11/08/16	13:03	24.040	10.6	3.1	111.52	483
11/08/16	13:04	24.040	10.6	3.1	111.11	484
11/08/16	13:05	24.039	10.6	3.1	111.25	484
11/08/16	13:06	24.039	10.6	3.1	111.64	484
11/08/16	13:07	24.039	10.6	3.1	111.76	484
11/08/16	13:08	24.038	10.6	3.1	111.71	483
11/08/16	13:09	24.038	10.5	3.1	111.82	483
11/08/16	13:10	24.037	10.4	3.1	111.83	482
11/08/16	13:11	24.037	10.5	3.1	111.78	481
11/08/16	13:12	24.037	10.5	3.1	111.93	480
11/08/16	13:13	24.036	10.5	3.1	111.90	480
11/08/16	13:14	24.036	10.6	3.1	111.98	480
11/08/16	13:15	24.036	10.5	3.0	112.11	481

F = Unit Offline
E = Exceedance
M = Maintenance
T = Out Of Control

C = Calibration
S = Substituted
*** = Suspect**

Average Data

Plant: HUNTINGTON PLANT
Interval: 1 Minute
Type: Block
Report Period: 11/08/2016 11:55 Through 11/08/2016 14:09
Time Online Criteria: 1 minute(s

11/08/16	13:16	24.036	10.5	3.0	112.16	482
11/08/16	13:17	24.036	10.5	3.0	111.95	482
11/08/16	13:18	24.036	10.5	3.1	111.71	483
11/08/16	13:19	24.035	10.5	3.1	111.77	482
11/08/16	13:20	24.035	10.5	3.1	111.70	483
11/08/16	13:21	24.034	10.5	3.1	111.58	483
11/08/16	13:22	24.034	10.6	3.1	111.64	484
11/08/16	13:23	24.033	10.6	3.0	111.89	484
11/08/16	13:24	24.033	10.5	3.0	111.85	484
11/08/16	13:25	24.034	10.4	3.0	112.33	483
11/08/16	13:26	24.033	10.4	3.1	112.24	482
11/08/16	13:27	24.033	10.4	3.1	112.22	480
11/08/16	13:28	24.032	10.4	3.1	112.23	480
11/08/16	13:29	24.032	10.4	3.1	112.14	479
11/08/16	13:30	24.031	10.5	3.1	112.03	479
11/08/16	13:31	24.031	10.5	3.0	111.98	480
11/08/16	13:32	24.031	10.5	3.0	111.91	480
11/08/16	13:33	24.031	10.5	3.0	111.91	482
11/08/16	13:34	24.031	10.5	3.0	112.18	482
11/08/16	13:35	24.031	10.4	3.0	112.37	481
11/08/16	13:36	24.031	10.4	3.0	112.00	481
11/08/16	13:37	24.031	10.5	3.0	111.84	481
11/08/16	13:38	24.031	10.5	3.1	112.14	481
11/08/16	13:39	24.031	10.4	3.1	112.20	482
11/08/16	13:40	24.031	10.4	3.0	112.24	482
11/08/16	13:41	24.031	10.4	3.0	112.07	484
11/08/16	13:42	24.030	10.5	3.1	112.02	484
11/08/16	13:43	24.030	10.5	3.1	112.07	484
11/08/16	13:44	24.029	10.5	3.1	111.81	483
11/08/16	13:45	24.029	10.5	3.0	111.92	482
11/08/16	13:46	24.028	10.4	3.0	112.12	481
11/08/16	13:47	24.029	10.4	3.1	112.23	480
11/08/16	13:48	24.028	10.4	3.1	112.27	479
11/08/16	13:49	24.029	10.5	3.1	112.03	480
11/08/16	13:50	24.029	10.6	3.0	111.88	480
11/08/16	13:51	24.028	10.5	3.1	111.81	481
11/08/16	13:52	24.028	10.5	3.1	111.94	482
11/08/16	13:53	24.027	10.5	3.1	112.16	483
11/08/16	13:54	24.028	10.4	3.1	112.11	482
11/08/16	13:55	24.028	10.4	3.1	112.06	481
11/08/16	13:56	24.028	10.4	3.1	112.04	480
11/08/16	13:57	24.027	10.4	3.1	111.93	479

F = Unit Offline
E = Exceedance
M = Maintenance
T = Out Of Control

C = Calibration
S = Substituted
*** = Suspect**

Average Data

Plant: HUNTINGTON PLANT
Interval: 1 Minute
Type: Block
Report Period: 11/08/2016 11:55 Through 11/08/2016 14:09
Time Online Criteria: 1 minute(s

11/08/16	13:58	24.026	10.4	3.1	111.84	479
11/08/16	13:59	24.025	10.4	3.1	111.79	479
11/08/16	14:00	24.025	10.5	3.1	111.77	480
11/08/16	14:01	24.025	10.5	3.1	111.96	480
11/08/16	14:02	24.025	10.5	3.1	112.07	480
11/08/16	14:03	24.024	10.4	3.1	111.90	481
11/08/16	14:04	24.024	10.5	3.1	111.93	481
11/08/16	14:05	24.023	10.5	3.1	112.20	481
11/08/16	14:06	24.024	10.5	3.1	112.02	481
11/08/16	14:07	24.024	10.5	3.1	111.97	482
11/08/16	14:08	24.024	10.6	3.1	111.91	483
11/08/16	14:09	24.024	10.7	3.1	111.64	484

Average	24.041	10.5	3.0	111.82	482
Minimum	24.023	10.4	3.0	111.05	477
Maximum	24.064	10.8	3.1	112.83	489
Summation	3,245.532	1,377.3	410.9	15,096.37	65,022
Included Data Points	135	131	135	135	135
Total number of Data Points	135	135	135	135	135

F = Unit Offline
E = Exceedance
M = Maintenance
T = Out Of Control

C = Calibration
S = Substituted
*** = Suspect**

EMCO

EMISSIONS MEASUREMENT COMPANY

Project PC16-0001.19

Appendix D: Laboratory Data

Gravimetric Analysis

EPA Method 5/202 Gravimetric Analysis Report

Project Code:	PC16-1.19
Date Finalized:	11/16/2016
Analyst:	Parks

Laboratory Results Summary	
Sample ID	**Filterable Particulate Matter (mg)**
Huntington Unit 1, Run #1	15.4
Huntington Unit 1, Run #2	10.0
Huntington Unit 1, Run #3	9.3

Analytical Narrative

Quartz fiber filters were dessicated and tared to a constant weight in the EMCo laboratory prior to sampling. Following testing, the filters were dessicated for at least 24 hours, then weighed to a constant weight (±0.5 mg). The acetone rinses were measured to the nearest milliliter, transferred to tared aluminum weighing dishes, taken to dryness under a fume hood, dessicated for at least 24 hours, then weighed to a constant weight (±0.5 mg). Each result above represents total filterable particulate matter for each test run (acetone rinse + filter catch), with no blank correction performed unless otherwise indicated.

Instrumentation

All measurements were taken using a Torbal Model AGCN200 Analytical Balance under laboratory conditions. The instrument is auto-calibrated and challanged with three NIST-traceable reference weights daily.

Detection Limit / Sensitivity

All measurements are recorded to 0.0001g (0.1mg).

Notes

No deviations from the analytical procedures from EPA Method 5 were noted. All samples were received in good condition. After analysis, all samples are archived for a period of one year.

Attachments

Gravimetric Analysis Logs
Sample Chain of Custody

EPA Method 5 Gravimetric Analysis Log

Project Code:	PC16-1.19
Unit ID:	Huntington Unit 1

Front-Half Particulate Matter Filter Catch

	Run #1		Run #2		Run #3	
Filter #	1010		1011		1012	
	Date	Weight (g)	Date	Weight (g)	Date	Weight (g)
Final Weight	11/11/16	0.3899	11/11/16	0.3918	11/11/16	0.3938
Tare Weight (g)	2/10/16	0.3837	2/10/16	0.3867	2/10/16	0.3879
Filter Catch (g)	**0.0062**		**0.0051**		**0.0059**	

Front-Half Particulate Matter Acetone Rinse Catch

	Run #1		Run #2		Run #3	
Dish #	1685		1681		1645	
	Date	Weight (g)	Date	Weight (g)	Date	Weight (g)
Final Weight	11/11/16	6.5899	11/11/16	6.4326	11/11/16	6.6226
Tare Weight (g)	8/9/16	6.5807	8/9/16	6.4277	8/9/16	6.6192
Total Rinse Catch (g)	**0.0092**		**0.0049**		**0.0034**	

Total Particulate Catch

	Run #1	Run #2	Run #3
Filter Catch (g)	0.0062	0.0051	0.0059
+ Rinse Catch (g)	0.0092	0.0049	0.0034
Total PM (g)	**0.0154**	**0.0100**	**0.0093**

11990 W. 52nd Avenue
Wheat Ridge, CO 80033

EMCO
EMISSIONS MEASUREMENT COMPANY

Office (303) 495-3936
Toll Free (800) 984-9883
Fax (888) 605-0243
www.stacktest.us

Laboratory Chain of Custody Record

Project Code:	PC 16 - Q4
Client:	Pacificorp
Facility:	HTG
Unit:	1 + 2
Sample Date(s):	Nov. 8, 9 of 2016
Project Manager:	MS

Sample ID / Run #	Filter ID	Front ½ Acetone		Back ½ Hexane		Back ½ Water	
		Tin ID	Volume (mL)	Tin ID	Volume (mL)	Baggie ID	Volume (mL)
U1 R1	1010	1685		1779		426	
U1 R2	1011	1687		1782		431	
U1 R3	1012	1645		1763		425	
Ace Blank		1665					
Hex Blank		1689					
H2O Blank						446	
U2 R1	1016	1736		1780		469	
U2 R2	1017	1716		1786		482	
U2 R3	1018	1705		1778		478	
TB				1781		446	

Relinquished by:	Date: 11-9-16
Received by:	Date 11-10-16

EMCO

EMISSIONS MEASUREMENT COMPANY

Project PC16-0001.19

Appendix E: Calibration Information

Dry Gas Meter Pre-Test and Post-Test Calibrations

Critical Orifice Calibration Certificate

AETB Certification

Environmental Supply Company, Inc.
Quality Source Sampling Systems & Accessories

DRY GAS METER CALIBRATION REPORT

Customer: Date: 3/12/2009

Console Serial # 1756 Console Part # C-5000 SL

DGM Type S-275 DGM # 15550547 Reference Meter S/N 554840

Barometric Pressure, P_b: 29.99 in. Hg Tested at: 0.00 in. Hg - Vacuum

RUN	1	2	3	Units
Orifice Manometer Setting, ΔH	2.00	0.75	6.00	in. H_2O
Elapsed Time	14.00	22.00	8.00	min.
Reference Meter				
Final Volume Reading	922.926	933.748	945.105	ft^3
Initial Volume Reading	912.060	923.253	934.345	ft^3
Total Gas Volume, V_w	10.866	10.495	10.760	ft^3
Temperature, Initial	66.00	67.00	66.00	°F
Temperature, Final	66.00	67.00	67.00	°F
Avg Temperature, T_w	66.00	67.00	66.50	°F
Dry Gas Meter				
Final Volume Reading	20.010	30.835	42.070	ft^3
Initial Volume Reading	9.193	20.335	31.432	ft^3
Total Gas Volume, V_m	10.817	10.500	10.638	ft^3
Average Temperature, Initial	66.00	67.00	68.00	°F
Average Temperature, Final	67.00	68.00	68.00	°F
Avg Temperature, T_m	66.50	67.50	68.00	°F
ΔH (a)	1.8670	1.8568	1.8633	**Avg. ΔH(a) 1.8624**
ΔH (a) Tolerance Check	OK	OK	OK	
Gamma, Y	0.9976	0.9956	0.9966	**Avg. Y 0.9966**
Gamma Tolerance Check	OK	OK	OK	

Calibration Performed By:

$$\Delta H_{(a)} = \frac{0.0319\,\Delta H}{P_b(T_m + 460)}\left[\frac{(T_w + 460)\theta}{V_w}\right]^2$$

$$Y = \frac{V_w P_b (T_m + 460)}{V_m (P_b + \Delta H / 13.6)(T_w + 460)}$$

2142 E. Geer Street, Durham, North Carolina 27704 800-STACKS-5 (782-2575) 919-956-9688 FAX: 919-682-0333

METHOD 5 CRITICAL ORIFICE CALIBRATION

Environmental Supply Company, Inc.

CRITICAL ORIFICE SET S/N: 1531s

DATE: January 8, 2016

REFERENCE DRY GAS METER
SERIAL NUMBER: 16300942
CALIBRATION FACTOR, Yc: 0.991

LEAK CHECK: Passed

ORIFICE #	RUN #	CRITICAL VACUUM (in Hg)	TESTED VACUUM (in Hg)	Barometric Pressure per Orifice AVG (P_{bar})	DGM READINGS (FT^3) INITIAL	DGM READINGS (FT^3) FINAL	DGM READINGS (FT^3) NET (V_m)	TEMPERATURES °F AMBIENT	DGM INLET INITIAL	DGM INLET FINAL	DGM OUTLET INITIAL	DGM OUTLET FINAL	DGM AVG	ELAPSED TIME (MIN) θ	DGM ΔH (in H_2O)	K' FACTOR (english)	K' FACTOR (metric-liters)	K' FACTOR (metric-m^3)	K' FACTOR VARIATION (%)
31	1	15	17.5		67.132	73.855	6.723	70.9	74.3	74.3	74.3	74.5	74.35	6.00	4.12	0.8535	0.7092	7.0921E-04	-0.04
	2	15	17.5	29.70	73.855	80.582	6.727	70.9	74.3	74.1	74.3	74.3	74.25	6.00	4.12	0.8542	0.7098	7.0976E-04	0.04
															AVG K' FACTOR =	0.8538	0.7095	7.095E-04	
23	1	15	18		80.582	86.457	5.875	71.0	74.2	74.0	74.3	74.3	74.20	7.00	2.29	0.6367	0.5290	5.2903E-04	0.01
	2	15	18	29.69	86.457	92.331	5.874	70.9	74.0	73.9	74.3	74.3	74.13	7.00	2.29	0.6366	0.5290	5.2897E-04	-0.01
															AVG K' FACTOR =	0.6366	0.5290	5.290E-04	
18	1	15	18		92.331	97.588	5.257	71.0	74.1	74.1	74.4	74.4	74.25	8.00	1.44	0.4974	0.4133	4.1330E-04	-0.05
	2	15	18	29.69	97.588	102.850	5.262	70.9	74.0	74.0	74.4	74.4	74.20	8.00	1.44	0.4979	0.4137	4.1370E-04	0.05
															AVG K' FACTOR =	0.4976	0.4135	4.135E-04	
16	1	15	18		102.850	108.733	5.883	71.1	74.1	74.1	74.5	74.5	74.30	10.00	1.15	0.4450	0.3698	3.6975E-04	0.03
	2	15	18	29.69	108.733	114.613	5.880	71.1	74.1	74.1	74.5	74.5	74.30	10.00	1.15	0.4447	0.3696	3.6956E-04	-0.03
															AVG K' FACTOR =	0.4449	0.3697	3.697E-04	
12	1	15	18		114.613	119.720	5.107	71.1	74.0	73.8	74.5	74.5	74.20	12.00	0.58	0.3215	0.2672	2.6716E-04	-0.06
	2	15	18	29.68	119.720	124.833	5.113	71.1	73.8	74.1	74.4	74.5	74.20	12.00	0.58	0.3219	0.2675	2.6747E-04	0.06
															AVG K' FACTOR =	0.3217	0.2673	2.673E-04	

USING THE CRITICAL ORIFICES AS CALIBRATION STANDARDS:
Calculate the standard volumes of air passed through the DGM and the critical orifices, and calculate the DGM calibration factor, Y, using the equations in US EPA Method 5, Section 7.2.3.3 (these equations are programmed on the spreadsheet included with each orifice set).

K' = Critical orifice coefficient,

$[(ft^3)(°R)^{1/2})]/[(in.Hg)(min.)]$ - English Units

$[(liters)(°K)^{1/2})]/[(mm\ Hg)(min.)]$ - Metric-Liters Units

$[(m^3)(°K)^{1/2})]/[(mm\ Hg)(min.)]$ - Metric Units

Critical Orifice Set number 1531s was calibrated in accordance with the Code of Federal Regulations, Title 40, Part 60, Appendix A, Method 5, Section 7.2

Signature

01/08/16
Date

Environmental Supply Co., Inc. - 708 E. Club Blvd., Durham, NC 27704 - 919-956-9688 - www.environsupply.com

11990 W. 52nd Avenue
Wheat Ridge, CO 80033

EMCo
EMISSIONS MEASUREMENT COMPANY

Office (303) 495-3936
Toll Free (800) 984-9883
Fax (888) 605-0243
www.stacktest.us

RE: Certification of Air Emission Testing Body (AETB) Conformance

To Whom it May Concern:

This letter is to confirm that Emissions Measurement Company LLC ("EMCo") is an Air Emission Testing Body (AETB) operating in conformance with ASTM D7036-04, as required by 40 CFR Part 75, Appendix A §6.1.2. The table below lists the EPA Reference Methods for which each listed Project Manager is a Qualified Individual and other relevant information required by (as applicable) 40 CFR Part 75.59(a)(15), 40 CFR Part 75.59(b)(6) and 40 CFR Part 75.59(d)(4).

Emissions Measurement Company
(800) 984-9883
AETB Qualified Individual Information

QI Name	QI Email	Exam*	Exam Date	Exam Provider	Provider Email
Andrew Bruning	abruning@stacktest.us	SES Group 1 SES Group 2 SES Group 3	6/12/2014 9/18/2015 6/12/2015	SES	QSTIprogram@gmail.com
		EPA Method 30B	1/16/2015*	Ohio-Lumex	andrew.mertz@ohiolumex.com
Will Stangroom	wstangroom@stacktest.us	SES Group 1	8/2/2016	SES	QSTIprogram@gmail.com
Craig Kormylo	ckormylo@stacktest.us	SES Group 1 SES Group 3	2/5/2016	SES	QSTIprogram@gmail.com
		EPA Method 30B	1/16/2015*	Ohio-Lumex	andrew.mertz@ohiolumex.com
Matthew Parks	mparks@stacktest.us	SES Group 1 SES Group 2 SES Group 3	2/5/2016 9/18/2015 2/5/2016	SES	QSTIprogram@gmail.com

*The Source Evaluation Society (SES) Group 1 Exam includes EPA Reference Methods 1, 1A, 2, 2A, 2C, 2D, 2F, 2G, 2H, 3, 3B, 4, 5, 5A, 5B, 5D, 5E, 5F, 5I, 17, 19, 201A and 202. The SES Group 2 Exam includes EPA Reference Methods 1 , 2, 3, 4, 3B, 6, 6A, 6B, 7, 7C, 7D, 8, 11,13A, 13B, 15A, 16A, 19, 26, 26A and 202.The SES Group 3 Exam includes EPA Reference Methods 3A, 6C, 7E, 10, 10B, 20, 25A, 40 CFR Part 60 Performance Specifications 2 – 8, 15 and 40 CFR Part 75.
Initial 30B training provided by Ohio-Lumex; refresher exam administered by EMCo once every five years.

Please feel free to contact me with any questions regarding the above.

Matthew Parks
Technical Director