August 30, 2011

OPERABLE UNIT 5 (OU-5) REMEDIAL INVESTIGATION REPORT

Sunnyside Yard
Queens, New York

Prepared for

NATIONAL RAILROAD PASSENGER CORPORATION
Washington, D.C. 20002

ROUX ASSOCIATES, INC.

Environmental Consulting & Management

ROUX

209 Shafter Street, Islandia, New York 11749 ♦ 631-232-2600

AM0055.0050Y005.122/CV

TABLE OF CONTENTS

CERTIFICATION iii

1.0 INTRODUCTION 1

2.0 BACKGROUND 5
- 2.1 Yard Location and Description 5
- 2.2 Yard History 5
- 2.3 Sewer System Layout 5
- 2.4 OU-5 RI Rationale 7

3.0 SUMMARY OF PREVIOUS OU-5 INVESTIGATIONS 9
- 3.1 Phase II Remedial Investigation dated February 15, 1995 9
- 3.2 Results of Sewer Sampling Program and Oil/Water Separator Inspection and Evaluation, Sunnyside Yard, Queens, New York, Dated September 6, 1994 10
- 3.3 Summary of the Results for the June-July 1996 Sewer Sampling Program and Recommended Scope of Work, Sunnyside Yard, Queens, New York, Dated November 1, 1996 12
- 3.4 Summary of the Results for the Expanded Sewer System Investigation, Sunnyside Yard, Queens, New York, Dated August 28, 1997 13
- 3.5 Industrial Wastewater Discharge Permit Sampling 15
- 3.6 June 2009 Sewer System Visual Inspection 16

4.0 OU-5 RI METHODOLOGY AND SCOPE OF WORK 17
- 4.1 Conceptual Site Model 17
- 4.2 Field Methods 18
  - 4.2.2 Task 2: Sewer Sediment Sampling and Sewer Water Sampling 20
    - 4.2.2.1 Dry Weather Sampling Event 21
    - 4.2.2.2 Precipitation Sampling Event 22
    - 4.2.2.3 Post Precipitation Sampling Event 23
    - 4.2.2.4 Flow Monitoring 24
  - 4.2.3 Task 3: Sewer Camera Inspection 25
  - 4.2.4 Task 4: Oversight of ESA Project Sewer Modification Work 25

5.0 NATURE AND EXTENT OF PCB CONTAMINATION 27
- 5.1 PCBS in Sewer Sediment 27
- 5.2 PCBs in Sewer Water 29
- 5.3 Summary of PCB Contamination in Sewer Sediment and Sewer Water 30
- 5.4 Location of Areas Requiring Further Evaluation 31

6.0 PLANNED FEASIBILITY STUDY 33
- 6.1 Sewer Sediment 33
  - 6.1.1 No Action 33
  - 6.1.2 Sewer Sediment Vacuum Removal and Offsite Disposal 33
- 6.2 Proposed MH-6 Cleanout 34

7.0 CONCLUSIONS AND RECOMMENDATIONS 35

8.0 REFERENCES 37

TABLE OF CONTENTS

(Continued)

TABLES

1. Summary of Polychlorinated Biphenyl Compound Concentrations in Sewer-Sediment Samples Collected in the Primary Sewer System, Sunnyside Yard, Queens, New York
2. Summary of Polychlorinated Biphenyl Compound Concentrations in Sewer-Water Samples Collected in the Primary Sewer System, Sunnyside Yard, Queens, New York

FIGURES

1. Location of Site
2. Amtrak Yard Layout

APPENDIX

A. Data Usability Summary Reports for OU-5

PLATES

1. Sewer System Base Map
2. Summary of Total PCBs Detected in Sewer Water and Sewer Sediment Samples
3. ESA Sewer Modifications as of August 2011
4. Portions of Sewer System Requiring Evaluation during the Feasibility Study

CERTIFICATION

I, Joseph D. Duminuco, certify that I am currently a Qualified Environmental Professional as defined in 6 NYCRR Part 375 and that this Remedial Investigation Work Plan was prepared in accordance with all applicable statutes and regulations and in substantial conformance with the DER Technical Guidance for Site Investigation and Remediation (DER-10).

August 30, 2011

1.0 INTRODUCTION

On behalf of the National Railroad Passenger Corporation (Amtrak) and the New Jersey Transit Corporation (NJTC), Roux Associates, Inc. (Roux Associates) has prepared this Operable Unit 5 (OU-5) Remedial Investigation (RI) Report for the Sunnyside Yard in Queens, New York (Yard). As described in detail below, OU-5 is defined as the sewer system located beneath the Yard. The location of the Yard is shown on Figure 1. The OU-5 RI was performed in accordance with the May 13, 2010 Work Plan for the OU-5 RI and the Addendum to Work Plan for OU-5 RI dated August 26, 2010 (collectively referred to as Work Plan), approved by the New York State Department of Environmental Conservation (NYSDEC) on September 1, 2010. The Work Plan was prepared in accordance with the provisions of the Order on Consent (OOC) Index #W2-0081-08-10, between the NYSDEC, Amtrak, and NJTC.

The purpose of this report is to present the findings of the OU-5 RI (completed in March 2011), which was conducted to augment data from several previous investigations so that a final remedy can be evaluated and implemented for OU-5. As such, this report summarizes the findings of those previous investigations, and together with the findings of the OU-5 RI, provides a comprehensive understanding of the nature and extent of the contamination found in OU-5. Based on the findings presented in this report, Roux Associates will prepare a Feasibility Study (FS) to evaluate potential remedial alternatives for contamination in OU-5. Consistent with the OOC, Roux Associates will submit the FS under separate cover following NYSDEC's approval of this RI Report.

To accommodate a rigid construction schedule for Amtrak's High Speed Trainset (HST) program and still address site wide remedial efforts in a timely and orderly manner, with the NYSDEC's concurrence, in 1997, the Yard was subdivided into six OUs shown on Figure 2, and described below.

- OU-1: Soil above the water table within the footprint of the HSTF S&I Building. A Record of Decision (ROD) was issued for OU-1 in August 1997, and the remedial work was completed in April 1998.
- OU-2: Soil above the water table within the footprint of the HSTF S&I Building ancillary structures. A No Further Action ROD was issued for OU-2 in November 1997.

- OU-3: Soil and separate phase petroleum hydrocarbon (SPH) accumulation above the water table and soil below the water table within 8 acres in the north central portion of the Yard. A ROD was issued for OU-3 in March 2007. Remediation is ongoing.
- OU-4: Consists of the soil above the water table (unsaturated zone) at the Yard, excluding the areas defined as OU-1, OU-2, and OU-3. OU-4 comprises 120 of the total 133 acres of the Yard. A ROD was issued for OU-4 in March 2009. Remediation is ongoing.
- OU-5: Sewer system (water and sediment) beneath the Yard.
- OU-6: Saturated soil (excluding beneath OU-3) and the groundwater beneath the Yard. A No Action ROD was issued for OU-6 in March 2010.

At the time the OUs were defined in 1997, the NYSDEC and the New York State Department of Health (NYSDOH) identified three specific compounds of concern (COCs) in soil at the Yard; polychlorinated biphenyls (PCBs), carcinogenic polycyclic aromatic hydrocarbons (cPAHs) a subset of semivolatile organic compounds (SVOCs), and lead. The seven cPAHs (considered carcinogenic by NYSDEC) that were collectively identified as a COC by the NYSDEC are; benzo(a)anthracene, benzo(a)pyrene, benzo(b)fluoranthene, benzo(k)fluoranthene, chrysene, dibenzo(a,h)anthracene and indeno(1,2,3 cd)pyrene. The NYSDEC-recommended soil cleanup levels for the Yard COCs were re-established in the OU-4 ROD (March 2009) and are as follows:

- Total PCBs: 25 milligrams per kilogram (mg/kg).
- Total SVOCs: 500 mg/kg. In addition, a one foot thick clean cover or ballast will be established and/or maintained over areas known to contain cPAHs at concentrations greater than 25 mg/kg and are not presently covered by buildings, tracks, or pavement.
- Lead: 3,900 mg/kg.

As shown on Plate 2, OU-5 consists of two separate subsystems; the primary combined sewer system in the main section of the Yard serving among other facilities, the commissary area, engine house, and the body tracks and discharging into the New York City Department of Environmental Protection (NYCDEP) combined sewer system and ultimately the Bowery Bay Wastewater Treatment Plant; and the secondary sewer system, a storm sewer system that serves the western section of the Yard. The secondary sewer system discharges into the NYCDEP sewer system along 28th Street and ultimately discharges into Dutch Kills.

The sewer systems underneath the Yard are approximately 100 years old and may be damaged or in need of repair in certain sections. Based on the depth to groundwater measurements throughout the Yard, currently most of the sewer system is located below the water table and, therefore, would receive an inflow of groundwater and soil through any cracks or holes rather than discharge sewer contents into the soil at the Yard.

The primary sewer system receives combined storm water and sanitary flows, while the secondary sewer system receives only storm water. Inflows to the primary sewer system occur during dry weather conditions (groundwater infiltration, sanitary discharges, and periodic operation of the Car Washer along the south side of the Yard) and additional inflows occur during wet weather conditions (surface drainage and track drains). The only dry weather inflow to the secondary sewer system is from groundwater infiltration and the only additional inflow during wet weather conditions is from surface drainage.

Currently, a significant portion of the construction of the Metropolitan Transportation Authority (MTA) East Side Access (ESA) Project, a very large, multi-year construction project to support MTA/LIRR ridership, will occur in and beneath the Yard, including the construction of multiple train tunnels beneath the Yard. The ESA Project also includes significant modification to both sewer subsystems beneath the Yard. Much of this work is ongoing and may impact OU-5 and the Remedial Alternatives to be evaluated as part of the FS. Based on current MTA estimates, construction associated with the ESA project (and therefore its impacts to OU-5 and the Yard as a whole) are anticipated to continue through 2016.

As noted previously, this report incorporates all sewer data generated as part of previous NYSDEC-approved investigations completed at the Yard by Roux Associates prior to implementation of the OU-5 Work Plan; all data relevant to OU-5 generated by ESA and provided to Roux Associates; and all sewer data generated as a result of implementing the OU-5 RI Work Plan. It provides a comprehensive understanding of sewer system layout, flow directions, sample locations, and PCB detections in sewer sediment and sewer water within the primary system.

The remainder of the OU-5 RI Report has been divided into the following eight sections with a brief description of each provided below.

- Section 2.0: Background
  This section provides a summary of the Yard operating history, a Yard description, and other relevant information pertaining to the Yard and OU-5.

- Section 3.0: Summary of Previous OU-5 Investigations
  This section provides a summary of previous investigations completed at the Yard by Roux Associates and other parties with a focus on the results for work performed related to OU-5.

- Section 4.0: OU-5 RI Methodology and Scope of Work
  This section provides a detailed summary of the methods and scope of work completed as part of the most recent investigation conducted in OU-5, the OU-5 RI.

- Section 5.0: Nature and Extent of Contamination
  This section presents a summary of the nature and extent of the contamination in OU-5, including sewer water and sediment.

- Section 6.0: Planned Feasibility Study
  This section presents a preliminary, high level discussion of potential remedial action alternatives related to OU-5. The FS will provide a detailed, thorough evaluation of each remedial action alternative.

- Section 7.0: Conclusions and Recommendations
  This section presents a comprehensive summary of the findings and conclusions of this OU-5 RI based on contaminant distribution, source areas, and current regulations, and presents recommendations with respect to OU-5.

- Section 8.0: References

Note that based on the unique nature of this Operable Unit (i.e., fully contained sewer system), it was determined that an Exposure Assessment and Fate and Transport Section was not warranted for this Operable Unit.

2.0 BACKGROUND

This section includes a general description of the Yard location and operational history, as well as a more detailed description of OU-5.

2.1 Yard Location and Description

The Yard is located in Queens County, New York and is identified as Block 214 and Lots 1 and 68 on the New York City Tax Map. Figure 1 shows the Yard location. The Yard is situated on a 133-acre area bounded by the MTA/Long Island Rail Road (LIRR) property to the north, Skillman Avenue to the south, light industrial and commercial properties and 42nd Place to the east, and Thompson Avenue to the west.

2.2 Yard History

The Pennsylvania Tunnel and Terminal Company, a subsidiary of the Pennsylvania Railroad, later known as the Penn Central Transportation Company, originally constructed the Yard in the early 1900s. The Yard officially opened on November 27, 1910. On April 1, 1976, the Consolidated Rail Corporation (Conrail) acquired the Yard, and the same day conveyed it to Amtrak. The MTA/LIRR currently owns a portion of the Yard along the northern boundary (including portions of OU-3 and OU-5) and maintains rights of way through the Yard. The Yard originally operated as a storage and maintenance facility for railroad rolling stock, and functions today as a maintenance and service facility for diesel and electric locomotives and railroad cars for Amtrak, and a train layover and service yard for NJTC.

2.3 Sewer System Layout

The original layout of the Yard consisted of two separate yards; the North Yard (currently MTA/LIRR owned) and the South Yard (currently Amtrak owned). The North Yard was intended to be used for storage of multiple unit type railcars. The South Yard was intended to be used for storing, cleaning, and repairing Pullman cars, dining cars, and coaches. The construction of the Sewer System beneath the Yard started in 1908.

In constructing the sewer along the north side of the Yard, a very fine quicksand was encountered which caused considerable construction problems. The slope and shape of the Yard caused the surface drainage to flow toward the East River tunnel portals, and it was necessary to intercept it

by an adequate sewer system before it reached the tunnels. Two sewer systems were constructed. The primary sewer system was located in the main section of the Yard and the secondary sewer system was located in the western section of the Yard. The primary and secondary sewers were built as two completely separate sewer systems.

The secondary sewer system was to receive only surface drainage to discharge into the NYCDEP sewer system and then discharge into Dutch Kills. The primary sewer system, also called the Payntar Avenue System, was designed and built to receive sanitary and surface drainage, and then discharge into the NYCDEP Webster Avenue Sewer System at Payntar Avenue and Jackson Avenue, ultimately discharging to the Bowery Bay Wastewater Treatment Plant. In some low-lying areas of the Yard, open-jointed sub-surface tile drains were used. Sewers were located, where feasible, in areas where piles would not be required. However, in some areas of the Yard, concrete and iron-pipe sewers were supported by piles. When in proximity to or directly under railroad tracks, the concrete sewers were reinforced. The subsurface sewer manways were made of brick and coved with steel manhole covers.

On September 29, 1909, a contract was entered into for the construction of five buildings within the Yard: Carpet Shed, Stores and Commissary Building, Store and Lavatory Building, Oil House and Sand House. On October 21, 1909, a contract was entered into for the construction of the Battery Repair Building and Inspection Building and, on February 7, 1910, a contract was entered into for the construction of the Motive Power Facilities Buildings, including the boiler house and Substation, Machine and Smith Shop, and Inspection Pit Shed, along with four (4) signal cabins. Each of these contracts resulted in modifications of the sewer system.

A significant modification to the sewer system at the Yard occurred during the mid-1990s with the construction of the Static Frequency Converter Station (SFC) in the southeast portion of the Yard. Modifications to a portion of the primary sewer system resulted from this construction project located east of the 39th Street Bridge. As shown on Plate 1, approximately eight new manholes (UNK-3, UNK-4, UNK-5, UNK-6, UNK-7, UNK-8, UNK-9, and UNK-10) were added to the sewer system while two manholes (MH-18 and MH-19) were completely abandoned and buried. Flows originating from this newly constructed area ultimately discharge into Manhole MH-13 (Plate1).

Other projects have had some impact on the sewer system, including the 1997 construction of the High Speed Trainset Facility (HSTF) S&I Building which introduced a 1,000-foot storm sewer line discharging into Manhole UNK-1, located upstream of MH-13 (Plate1). Additionally, major modifications are currently taking place with the construction of the ESA Project.

At the Yard, the ESA Project consists of several contracts that will intersect subsurface environmental elements, including modifications to the existing sewer system to accommodate tunnels and other structures necessary to complete the project. The ESA Project will also result in significant new rights of way within the Yard. A brief description of these contracts is provided in Section 4.2.4.

2.4 OU-5 RI Rationale

As discussed in the following section, historical investigations of the sewer systems have focused on the presence of PCBs in sewer sediment and sewer water in the primary sewer system. The rationale for the focus on PCBs and the primary sewer system is based on the following:

- NYSDEC's request to evaluate only PCBs in the sewer system during performance of the Phase II RI and all subsequent NYSDEC-approved sampling programs focused only on PCBs;
- NYSDEC's determination of COCs for the Yard to include PCBs, lead, and cPAHs/SVOCs; and
- Empirical data from OU-3, OU-4, and OU-5 indicating PCBs to be the primary compound of concern at the Yard and that the potential sources of contamination are in locations that would impact the primary sewer system. This data consists of the following:
  - The primary sewer system is partially located beneath OU-3, and historically PCBs were the primary COC found in OU-3 (i.e., historically the PCB-containing mobile SPH plume and surface runoff could have impacted the primary sewer system).
  - In OU-4 there is currently only one lead soil COC exceedance, no cPAH/SVOC soil COC exceedances, and seven PCB soil Hot spots. All current COC exceedances are located over the primary sewer system. Many historical soil COC exceedances were PCB exceedances and all but one were located over the primary sewer system.
  - The body tracks (with track drains) where the majority of stationary PCB-containing transformers that leaked were located and where trains with PCB-containing transformers were stored discharged into the primary sewer system.
  - OU-5 historical sewer water data (both primary and secondary sewer systems) contains no exceedances of the NYCDEP site-specific discharge requirements for lead (or for

any other listed compounds). During previous investigations, PCB-containing sediments were determined to not be re-accumulating in the secondary sewer system, and PCBs were not present in the sewer water samples collected in the secondary sewer system.

In addition, recent OU-6 groundwater data indicates no exceedances of PCBs or cPAHs/SVOCs, and only one exceedance of lead that was not representative of groundwater quality (attributed to suspended sediment).

Based on this rationale, and consistent with the approved OU-5 RI Work Plan, further remedial investigation activities are not warranted in the secondary sewer system. Therefore, the OU-5 RI scope of work was focused on the primary sewer system. Additionally, only the evaluation of PCBs in the primary sewer system was the focus of this investigation.

3.0 SUMMARY OF PREVIOUS OU-5 INVESTIGATIONS

As presented in Section 1.0, the Yard was previously divided into six OUs. Since all other units could all potentially impact the sewer system (OU-5) through migration of contaminated soil, SPH or contaminated groundwater, it was deemed appropriate to begin to address OU-5 after the other OUs. As noted in Section 1.0, RODs have been issued by the NYSDEC for the other five OUs and remediation, if applicable, is either completed or ongoing. A summary of the findings from all previous NYSDEC-approved investigations that were performed in what is now referred to as OU-5 is presented below.

3.1 Phase II Remedial Investigation dated February 15, 1995

The Phase II RI work plan was developed by Roux Associates and submitted to the NYSDEC on August 5, 1992. Because the sewer system was now considered to be a potential concern for offsite migration of contaminants, the work plan proposed an investigation to determine if the sewer system beneath the Yard actually contained contamination and therefore, may be acting as a conduit for the offsite migration of contaminants, particularly PCBs. Sewer water and sediment sampling from both the primary and secondary sewer system was proposed in the work plan, and conducted as part of the Phase II RI. Results are described below.

Sewer Sediment in the Primary Sewer System

In February 1993, sewer sediment samples were collected from MH-2, MH-3, and MH-8 (Refer to Plate 1 for manhole locations) and analyzed for PCBs. Sewer sediment samples from MH-2, MH-3, and MH-8 resulted in total PCB concentrations of 82,000, 54,000, and 4,200 micrograms per kilogram (µg/kg), respectively. Analytical results for PCBs from all sewer sediment samples collected are presented in Table 1, and on Plate 2.

Sewer Water in the Primary Sewer System

In order to determine if water containing contaminants was flowing into the primary sewer system and exiting the Yard, sewer water was collected from MH-2 (the last manhole connected to the primary system on Amtrak's property). MH-2 was the closest accessible manhole location to MH-40, the point where the primary sewer system exits MTA property. Sewer water samples collected from MH-2 in February 1993 were analyzed for PCBs, VOCs, SVOCs, and metals. Other locations where sewer water was collected in February 1993 include: MH-3, MH-5, MH-6,

MH-7, and MH-8. Sewer water samples from these latter locations were only analyzed for PCBs. PCBs were not detected in sewer water samples from MH-3, MH-5, and MH-6. Sewer water samples from MH-2, MH-7, and MH-8 resulted in total PCB concentrations of 2.3, 14.8, and 20.6 micrograms per liter (µg/L), respectively. Analytical results for VOCs, SVOCs, and metals were provided in the OU-5 RI Work Plan. Analytical results for PCBs in sewer water samples are presented in Table 2 and on Plate 2.

Sewer Sediment in the Secondary Sewer System

In February 1993 sewer sediment was not encountered in the secondary sewer system; therefore, a sewer sediment sample could not be obtained for further analysis. In April 1994, sewer sediment samples were collected from MH-1, MH-65 and CB-28 (Refer to Plate 1 for Manhole locations). Results indicated low concentrations of PCBs ranging from 490 µg/kg (CB-28) to a high of 3,500 µg/kg (MH-1). Data from the secondary sewer system was provided in the OU-5 RI Work Plan.

Sewer Water in the Secondary Sewer System

In order to determine if water containing contaminants was flowing into the secondary sewer system and exiting the Yard, sewer water was collected from MH-1 which was the closest accessible manhole to the point where the secondary sewer system exits the Yard. Samples collected from MH-1 were analyzed for PCBs, VOCs, SVOCs, and metals. Analytical results for VOCs, SVOCs, PCBs, and metals were provided in the OU-5 RI Work Plan.

3.2 Results of Sewer Sampling Program and Oil/Water Separator Inspection and Evaluation, Sunnyside Yard, Queens, New York, Dated September 6, 1994

In 1993, the configuration of the Yard-wide sewer system was surveyed and discrepancies, between actual conditions and available sewer maps were observed. The 1993 Work Plan was developed in a phased approach to allow a more rapid collection of data and determination of sources and due to differences found between actual conditions and information shown in the available sewer maps, a field survey was also conducted. The 1993 work plan scope of work consisted mainly of three tasks: sewer water and sewer sediment sampling; sediment removal; and sewer system monitoring.

The first step of the plan was to identify manhole locations with visible sewer sediments. After identifying the locations with sewer sediments, a sampling program was implemented to determine if PCBs were present. Following the sampling program, locations with PCBs containing sewer sediments were recommended for sediment removal. After completion of the sampling program, the sewer system monitoring program was implemented. The sewer system monitoring program was designed to determine if PCBs were continually being introduced into the sewer system or if they were no longer being introduced into the sewer system. The main objective was to determine if the contamination found resulted from historical events and associated residuals that might have remained in the sewer system or from current discharges from continuing sources.

The 1993 Work Plan was executed in April 1994 and results were presented in a report dated September 6, 1994 prepared by Roux Associates and in the Phase II RI Report dated February 15, 1995.

Sewer Sediment in the Primary Sewer System

Analytical results indicated that PCBs were detected in sewer sediment samples collected within the primary sewer system. Based on these results and previous results obtained from the February 1993 sampling round, sediment removal locations were recommended. Roux Associates proposed removal of sediments in 23 locations within the sewer system. Sewer sediment removal activities were conducted in 1996 (see discussion below).

In April 1994, 12 sewer sediment samples were collected from 10 locations (MH-2, MH-29, MH-35, MH-37, MH-40 (two discrete locations), MH-42, MH-45, MH-52, MH-55, and MH-69 (two discrete locations), and analyzed for PCBs. Results indicated the presence of PCBs in all samples with concentrations ranging from 170 µg/kg (MH-29) to a high of 51,000 µg/kg (MH-42). Results are presented Table 1 and on Plate 2.

Sewer Water in the Primary Sewer System

A total of 15 sewer water samples were collected from eight locations (MH-2, MH-29, MH-39, MH-40, MH-43, MH-52, MH-55, and MH-69) and analyzed for PCBs. PCBs were not detected in ten samples. Low levels of PCBs, ranging from 0.20 µg/L (MH-39) to 4.4 µg/L (MH-69, the only

sample to exceed one µg/L), were observed in the remaining five samples collected. The analytical results are presented in Table 2 and on Plate 2.

In April 1994, sewer water samples were collected from MH-2, MH-29, MH-39, MH-40, MH-43, MH-52 and MH-69 (Refer to Plate 1 for Manhole locations) and analyzed for PCBs. Sewer water samples from MH-2, MH-40, and MH-52 were analyzed both filtered and unfiltered to understand the effect that sewer sediment could potentially have in a sewer water sample. The PCB concentration in an unfiltered sewer water sample from MH-2 was 0.66 µg/L, and PCBs were not found in the filtered sewer water sample. The unfiltered sewer water sample from MH-40 contained PCBs at a concentration of 0.51 µg/L, while PCBs were not found in the filtered sewer water sample. PCBs were not found in the both filtered and unfiltered samples from MH-52. It was concluded that PCB detections in sewer water samples were likely the result of contaminated sediment particles being suspended in the sewer water by agitation prior to sample collection or sampling turbid water during high flow volume conditions. The analytical results are presented in Table 2 and on Plate 2.

Sewer Water in the Secondary Sewer System

In April 1994, sewer water samples were collected from MH-1, MH-65, and CB-28 and analyzed for PCBs (Refer to Plate 1 for Manhole locations). The analytical results (presented in the OU-5 RI Work Plan) indicate no PCBs were detected.

3.3 Summary of the Results for the June-July 1996 Sewer Sampling Program and Recommended Scope of Work, Sunnyside Yard, Queens, New York, Dated November 1, 1996

Sewer Sediment in the Primary Sewer System

In June through July 1996, 20 of the 23 proposed sediment removal locations were cleaned by Clean Harbors, using a vacuum truck and all recovered sediment was properly disposed in accordance with applicable local, State and Federal regulations. Subsequent to sewer sediment removal, a visual inspection was performed during July and August 1996 to determine the presence of returning sewer sediments within those 20 sediment removal locations. Results from the visual inspection, and results from the sampling of locations with returning sewer sediments were presented in a report dated November 1, 1996. Returning sediments were found at only

three manhole locations; MH-2, MH-40, and MH-42. The analytical results are presented in Table 1 and on Plate 2, and indicate PCBs were detected in all three samples.

Sewer Water in the Primary Sewer System

Sewer water samples were collected from eight manhole locations during this investigation, MH-2 (filtered and not filtered), MH-3 (filtered and not filtered), MH-5 (not filtered), MH-7 (not filtered), MH-37 (not filtered), MH-40 (filtered and not filtered), MH-42 (filtered and not filtered), and MH-52 (not filtered) and analyzed for PCBs. Results for unfiltered samples ranged from 0.015 µg/L (MH-6) to a high of 0.91 µg/L in the sample from MH-42. PCB concentrations in filtered samples ranged from 0.015 µg/L (MH-40) to a high of 0.10 µg/L in the sample from MH-2. The analytical results are presented in Table 2 and on Plate 2.

Sewer Water in the Secondary Sewer System

A sewer water sample was collected from MH-1 and analyzed for PCBs. The analytical results, presented in the OU-5 RI Work Plan indicate PCBs were not detected.

No further work was proposed for the secondary sewer system, as PCBs were never detected in any sewer water sample collected in MH-1 or any other location throughout the secondary sewer system that was analyzed for PCBs from any previous investigation. The NYSDEC approved of this modification and the subsequent expanded sewer system investigation was conducted only in the primary sewer system.

3.4 Summary of the Results for the Expanded Sewer System Investigation, Sunnyside Yard, Queens, New York, Dated August 28, 1997

During the period of November 1996 to March 1997, an expanded sewer system investigation was performed focused on the primary sewer system and was documented in a summary report dated August 28, 1997. The main components of the expanded sewer system investigation included: investigation of manhole and catch basin interconnectivity, flow rate measurements to determine rate of deposition of sediments and sewer sediment sampling to determine source of contamination and sediment migration patterns.

In order to determine interconnectivity, a visual inspection was performed within manhole MH-39, to determine a possible connection to manhole MH-2. The investigation indicated no direct

connection between manhole MH-39 and MH-2. However, a sewer pipe was found to connect manhole MH-39 to the 8-foot x 4-foot culvert that connects manhole MH-2 to manhole MH-40 approximately three feet downstream of manhole MH-2.

Delineation of PCB-containing sewer sediment accumulation areas within the primary sewer system was the main focus of the sampling events that took place during the expanded sewer system investigation. Selected manholes and catch basins within the primary sewer system were inspected for sediment accumulation. Sewer sediments were present in sufficient quantities for sampling at one catch basin and 10 manhole locations, and samples were collected and analyzed for PCBs.

Flow Monitoring

The proposed flow rate measurements from sewer branches (i.e., MH-2, MH-3, MH-6, and MH-52) to provide a better understanding of individual branch flow contributions and the potential sediment contribution from each branch was not completed due to intermittent flow during field observations. However, flow rate measurements were performed at the discharge point of both the 48-inch diameter pipe and 8-foot x 4-foot culvert located within manhole MH-40. It was necessary to determine the flow rates in these particular branches since flow from the primary sewer system exits the entire Yard from Manhole MH-40 through these branches. Based on actual measurements and observations, the maximum combined flow rates from both of the branches was estimated to be 750,000 gallons per day during a precipitation event or 230,000 gallons per day during normal flow.

Sewer Sediments in the Primary Sewer System

As noted above, results from the November 1996 expanded sewer system investigation indicated the presence of returning sediments at the following locations: MH-2, MH-3, MH-5, MH-8, MH-37, MH-40, MH-42, MH-52, MH-55, MH-69, and CB-4. Sewer sediments were sampled and analyzed for PCBs from those locations. Returning sediments sampled in MH-2 after the sediment removal program were found to contain PCBs at a concentration of 8,760 µg/kg. When compared to all other sampling rounds this is significantly lower than the highest PCB concentration previously found at this location, which was 82,000 µg/kg. Similarly, sediments collected and analyzed from MH-3 after the sediment removal program were found to contain

PCBs at a concentration of 32,500 µg/kg, again lower than the highest PCB concentration of 54,000 µg/kg previously found at this location. A decrease in the PCB concentration from the previous sampling round at MH-8, MH-55, and MH-69 were also observed. Analytical results are presented in Table 1 and on Plate 2.

On February 4 and 5, 1997, sand bags were placed in specific manholes to facilitate sediment accumulation from specific upstream sewer legs, as follows: MH-2 (from MH-41); MH-3; MH-5; MH-11; MH-37; and MH-52.

On March 11, 1997, these manholes were inspected for returning sediment, and samples were collected at three locations, MH-3, MH-11, and MH-52 for PCB analyses (no sediment was found in MH-5 or MH-37, and only sanitary waste was found in MH-2). PCBs were detected in all three samples analyzed, ranging from a low of 1,000 µg/kg (MH-11) to 91,100 µg/kg (MH-52). Analytical results are presented in Table 1 and on Plate 2.

As previously discussed, in 1997, the Yard was divided into OUs and it was determined the investigation of OU-5 to be most appropriate after the completion of the RI/FS process in the other five OUs. Therefore, none of the remaining recommended actions discussed in the 1997 report were performed. Also, during the construction of a new sewer siphon located downstream from MH-40, the New York City Transit Authority installed a weir within MH-40, the furthest downstream manhole of the primary sewer system. The purpose and construction of this weir is unknown. However, its presence in MH-40 since prior to the 1996 manhole cleanout has restricted the flow of sediment and sanitary waste passing through the 8-foot x 4-foot culvert from upstream MH-2, causing a backup into the Yard that now extends approximately 360 feet to MH-2.

3.5 Industrial Wastewater Discharge Permit Sampling

Although not part of the OU-5 RI, industrial wastewater discharge sampling is performed in the primary sewer system at the Yard. That data is included in the OU-5 RI Work Plan for completeness. On July 21, 2004, the NYCDEP issued Industrial Wastewater Discharge Permit (IWDP) No. 04-P3069-1 to Amtrak authorizing the discharge of industrial wastewater from the Yard into the New York City sewer system and identifying two discharge monitoring

points, determined to be MH-43 and MH-2. On August 17, 2004, NYCDEP issued IWDP No. 04-P3069-2 to supersede No. 04-3069-1, effective August 20, 2004, which removed monitoring point MH-43 from the permit requirement. The sampling requirement in the NYCDEP IWDP No. 04-P3069-2 included monthly pH sampling, and twice yearly collection of discharge samples for VOCs, SVOCs, priority pollutant metals plus Molybdenum, non-polar material, and total suspended solids (TSS) analyses. On September 27, 2005, a waiver was issued removing TSS from the permit sampling requirement. In December, 2008, the NYCDEP added a second monitoring point to the permit, the discharge tank from the oil/water separator located in the HSTF, discharging to replacement manhole MH-8, installed during HSTF construction (1996).

Beginning in December 2004, Roux Associates has collected the IWDP required samples for laboratory analyses. In accordance with the IWDP, the samples were collected on four consecutive days, twice yearly from MH-2, and beginning in 2009 from the HSTF discharge tank and analyzed for the parameters listed above. Additionally, a sewer water sample was collected from the secondary sewer system at the most downstream manhole at the Yard (MH-1) as part of the previously completed Phase II RI. Although not part of the IWDP sampling program, this data was included for completeness. The analytical results for metals from all primary and secondary sewer system water samples, compared to IWDP instantaneous maximum permissible concentration levels, are presented in the OU-5 RI Work Plan. A review of the sewer water data from the primary sewer system resulting from IWDP sampling indicated the instantaneous maximum permissible concentration for any of the pollutants described in Part I of the IWDP has not been exceeded.

3.6 June 2009 Sewer System Visual Inspection

A preliminary OU-5 RI field survey consisting of a visual inspection of the sewer system and its components was conducted in June 2009. The presence of sediments within some manholes was confirmed.

4.0 OU-5 RI METHODOLOGY AND SCOPE OF WORK

This section provides a detailed summary of the methods and the scope of work (SOW) completed as part of the OU-5 RI.

4.1 Conceptual Site Model

The conceptual site model for OU-5 was developed based on a review of the data previously collected in the Yard, a review of Amtrak and predecessor railroad operating histories and discussions with Amtrak personnel. As described above in Section 2.4, the investigation of PCBs in the primary sewer system was the focus of this remedial investigation. The presence of the PCBs in OU-5 sediment is largely attributable to predecessor railroads' operations. The Yard has operated as a railyard since 1910. Amtrak has continued to use the Yard for train maintenance and storage since acquiring the Yard in 1976. Currently, there are no significant onsite sources of PCBs. Past releases of PCBs are likely attributable to losses from stationary transformers or releases from train-mounted transformers over time. Specific locations, dates, or quantities of PCB releases are not known. However, PCB-containing equipment usage was significantly more by predecessor railroads than by Amtrak.

The sewer systems underneath the Yard are approximately 100 years old and may be damaged or in need of repair in certain sections. However, based on available sewer invert data and depth to groundwater measurements throughout the Yard, the majority of the sewer system piping is currently located below the water table and, therefore, would receive an inflow of groundwater and soil through any cracks or holes rather than discharge sewer contents into the soil at the Yard. Note that the No Action ROD issued for OU-6 in March 2010 indicates that both groundwater and saturated soils at the Yard are not considered to be a source of PCB contamination to the Yard sewer system.

Known or suspected sources of PCBs in the Yard were PCB containing stationary transformers that leaked, or trains equipped with PCB containing transformers that leaked while stored in the Yard impacting soil and/or SPH (OU-3). During storm events, erosion/runoff of PCB impacted soil into track drains, utility trenches, or open grate manholes, and then to sewers and PCB impacted soil or mobile SPH entering surface drains or catch basins within OU-3 and then to sewers, are likely sources of PCBs entering the sewer system. Note that as a result of Amtrak's

soil remediation efforts, all soil exceeding the NYSDEC recommended soil cleanup levels for all Yard COCs (including PCBs) has been successfully completed and PCBs were removed from OU-3. Additionally, as a result of both previous and ongoing SPH recovery efforts in OU-3, the volume and overall extent of mobile SPH has been reduced significantly, and through the removal and sealing of surface drains and catch basins in OU-3, it is not likely that PCB impacted soil or SPH is a continuing source of PCBs entering the sewer system in OU-3.

Further, through extensive investigation activities conducted in OU-4, Amtrak has thoroughly characterized unsaturated soil quality throughout OU-4. As documented in the OU-4 RI Report dated October 2, 2008, through the implementation of numerous soil Interim Remedial Measures (IRMs), Amtrak completed significant remediation of PCB-containing unsaturated soils throughout OU-4 prior to NYSDEC's issuance of a ROD for OU-4. At the time the OU-4 ROD was issued by NYSDEC (March 2009), a total of only 12 isolated soil remedial zones or "hot spots" containing PCBs in excess of the NYSDEC recommended soil cleanup levels for the Yard remained throughout the entire 120-acres comprising OU-4. Since the OU-4 ROD was issued in March 2009, Amtrak has already remediated five of these 12 PCB remedial zones. Amtrak's extensive removal of PCB containing soil in OU-4 has greatly reduced the potential for OU-4 to be acting as a continuing source of PCBs to the Yard sewer system (OU-5).

4.2 Field Methods

Field activities associated with the OU-5 RI were conducted from September 29, 2010 through March 2011. Field investigations pertaining to the sewer system at the Yard included the following proposed tasks:

- Task 1: Sewer System Mapping and Verification;
- Task 2: Sewer Sediment and Sewer Water Sampling;
- Task 3: Sewer Camera Inspection (if appropriate); and
- Task 4: Oversight of ESA Project Sewer Modification Work.

4.2.1 Task 1: Sewer System Mapping and Verification

Prior to the completion of subsequent tasks, a comprehensive Sewer System field inspection was required. This inspection included the development of an inventory of the Sewer System elements (i.e., manhole and manhole inlet grate conditions, catch basins and catch basins inlet grate

conditions). In order to identify current components of the sewer system, with the ultimate objective being the development of an accurate sewer system base map, the OU-5 RIWP identified five specific areas that required field verification:

1. Location of the connection between the new ESA north to south sewer and the segment MH-12 to MH-13.
2. Confirm that the manhole downstream of MH-72 is MH-43, not MH-34. This connection needed to be identified in order to understand potential source(s) of PCBs into MH-35 and MH-42.
3. Confirm accessibility of MH-5, MH-6, MH-7, MH-29, MH-35, MH-37, MH-40, and MH-45. These manholes were previously identified to contain PCB contaminated sediments and/or water and access were needed to conduct further sampling.
4. Verify existence of any pipe connection between the sewer segments from MH-57 to MH-56. Note this task was not performed as the pipe connection was confirmed prior to commencing OU-5 RI field tasks.
5. Confirm there have not been any other significant modifications to the Sewer System that have not been documented in the current Sewer Base Map (Plate 1).

On September 29 and 31, 2010, Roux Associates commenced field verification of the sewer system. Observations made with regard to the above noted specific areas are discussed below and are shown on Plate 1.

1. The connection between the new ESA north to south sewer was located approximately 40 feet east of MH-12.
2. Dye testing positively confirmed that MH-43 is downstream of MH-72.
3. Manholes MH-5, MH-7, and MH-37 could not be located.

No other significant modifications to the sewer system were observed.

Roux Associates could not locate manholes MH-5, MH-7, and MH-37, and MH-55 was found to be unsuitable for sampling as ESA was actively discharging to this manhole as part of their dewatering activities. Based on these findings, a summary of modifications to the sampling plan, made with NYSDEC approval, follows:

1. Manhole MH-5 was a proposed sampling location and could not be found. A large pit was located in this area where MH-5 is shown on Plate 1, however, only stagnant water was observed in the pit while rapidly flowing water was observed in MH-11 (upstream) and MH-3 (downstream). Based on this observation, we do not believe the pit is MH-5, and

we were unsuccessful in locating an additional manhole in this area. As a substitute and with NYSDEC concurrence, MH-11 (located upstream of MH-5) was sampled.

2. Manhole MH-7 was a proposed sampling location and could not be found. This manhole was located in OU-3, north of the former Metro Shed (Plate 1). This manhole was either buried or may have been removed or rendered inoperable during earlier demolition of the Metro Shed. Additionally, excavations completed during the OU-3 remediation activities beginning in October of 2010 were not able to locate MH-7. With NYSDEC concurrence, no substitute sample location was proposed.

3. Manhole MH-37 was a proposed sampling location and could not be found. This manhole was located in the body tracks west of the Honeywell Bridge (Plate 1) and is presumed to have been covered with blacktop or buried as a result of track work. As a substitute and with NYSDEC concurrence, MH-38 (located approximately 150 feet downstream of MH-37) was sampled.

4. MH-55 was located; however, it was observed that ESA was actively discharging water into this manhole as part of their dewatering activities. Because samples were already being collected upstream (MH-2) and downstream (MH-52), shown on Plate 1, with NYSDEC concurrence, no substitute location was proposed.

4.2.2 Task 2: Sewer Sediment Sampling and Sewer Water Sampling

The function of the primary sewer system is to carry sanitary sewage and storm water runoff to the NYCDEP's combined sewer system to ultimately discharge to the Bowery Bay Wastewater Treatment Plant. Characteristics of the storm water flows reaching the sewer system at the Yard are affected by the quality of surface runoff which, in turn, is affected by any above grade activity, especially construction activities. If runoff contains contaminants, these contaminants may become a source of pollution into the sewer system. Therefore, it is important to understand flow transport during dry weather and during wet weather events. For that reason, three rounds of sewer water and sewer sediment samples were collected as described below.

<u>Sewer Water Sampling Methodology</u>

Sewer water samples were obtained using a peristaltic (or vacuum) pump and disposable tubing. The tubing was lowered into the water, the pump activated, and the sample collected. Disposable gloves were worn while handling the sampling apparatus. Care was taken to prevent the tubing from coming into contact with the sewer walls or other surfaces that may affect the results.

Each sewer water sample was collected for both filtered/unfiltered analyses following the same procedure. The unfiltered portion was placed directly in the appropriate, pre-labeled sample container. The filtration procedure was as follows:

- The filtering apparatus was properly decontaminated.
- A clean (new) 0.45 micron pore-size filter was used.
- The water sample was passed through the 0.45 micron filter into the flask. If the sample contained significant sediment, then a pre-filter would have been placed before using the 0.45 micron filter.
- The filtered water sample was transferred to the appropriate, pre-labeled sample container.

Sewer Sediment Sampling Methodology

If sediment was present in sufficient quantities at the selected sewer sediment sampling location, a sample was collected for analysis. The samples were obtained using a clean stainless steel sediment dredge and/or a clean stainless steel trowel as sediment quantity or manhole conditions (i.e., water flow, manhole dimensions) dictated. The sampling apparatus was decontaminated between uses at each location as outlined the FSP. Care was taken to place only solids into the laboratory-supplied sample bottles.

All sewer water and sediment samples were placed on ice and protected from light immediately after collection and were delivered to the laboratory no longer than 12 hours after collection. Sewer water and sediment samples were analyzed for PCBs by Hampton Clarke Veritech Laboratory, Fairfield, NJ, (NY ELAP 11408 and 11939) following NYSDEC Analytical Services Protocol procedures using USEPA Method 8082. In addition to field samples, all required QA/QC samples were collected in accordance with the Quality Assurance Project Plan (QAPP) provided in the OU-5 RI Work Plan.

4.2.2.1 Dry Weather Sampling Event

On October 11 and 12, 2010, Roux Associates collected both sewer water and sediment samples (when available) under dry weather conditions which is defined as no measurable precipitation within a 24-hour period. A total of 13 sewer water samples (both filtered/unfiltered) were collected from 12 manhole locations and 11 sediment samples were collected from ten manhole locations for PCB analyses.

A summary of the locations sampled is provided below.

Manhole Designation	Media Sampled	Comments
MH-2	Sampled sewer water and sediment	Collected two discrete samples for both sewer water and sediment from within manhole
MH-3	Sampled sewer water and sediment	
MH-6	Sampled sewer water and sediment	
MH-8	Sampled sewer water only	No sediment present
MH-11	Sampled sewer water and sediment	Sampled in lieu of MH-5 with NYSDEC approval
MH-38	Sampled sewer water and sediment	Sampled in lieu of MH-37 with NYSDEC approval
MH-40	Sampled sewer water and sediment	
MH-42	Sampled sewer water and sediment	
MH-45	Sampled sewer water and sediment	
MH-51	Sampled sewer water only	No sediment present
MH-52	Sampled sewer water and sediment	
MH-69	Sampled sewer water and sediment	

4.2.2.2 Precipitation Sampling Event

On March 16, 2011, Roux Associates collected both sewer water and sediment samples (when available) during a precipitation event as prescribed in the OU-5 RIWP. The forecast for the day was for approximately 3/4 to 1-inch of rain to fall by the evening hours. The weather station located at nearby LaGuardia Airport recorded 0.56-inches of rain for the day and field notes indicate that it was raining during the sampling event. A total of 13 sewer water samples were collected (both filtered/unfiltered) from 12 manhole locations and 11 sediment samples were collected from 10 manhole locations for PCB analyses.

A summary of the precipitation sampling event is provided below.

Manhole Designation	Media Sampled	Comments
MH-2	Sampled sewer water and sediment	Collected two discrete samples for both sewer water and sediment from within manhole
MH-3	Sampled sewer water only	No sediment present
MH-6	Sampled sewer water and sediment	
MH-8	Sampled sewer water and sediment	
MH-11	Sampled sewer water and sediment	Sampled in lieu of MH-5 with NYSDEC approval
MH-38	Sampled sewer water and sediment	Sampled in lieu of MH-37 with NYSDEC approval
MH-40	Sampled sewer water and sediment	
MH-42	Sampled sewer water and sediment	
MH-45	Sampled sewer water and sediment	
MH-51	Sampled sewer water only	No sediment present
MH-52	Sampled sewer water and sediment	
MH-69	Sampled sewer water and sediment	

4.2.2.3 Post Precipitation Sampling Event

On March 17, 2011, as prescribed in the OU-5 RIWP, Roux Associates collected sewer water and sediment samples (when available) immediately (within 24 hours) after the precipitation event ended. A total of 13 sewer water samples (both filtered/unfiltered) were collected from 12 manhole locations and 10 sediment samples were collected from 9 manhole locations for PCB analyses.

A summary of the post precipitation sampling event is provided below.

Manhole Designation	Media Sampled	Comments
MH-2	Sampled sewer water and sediment	Collected two discrete samples for both sewer water and sediment from within manhole
MH-3	Sampled sewer water only	No sediment present
MH-6	Sampled sewer water and sediment	
MH-8	Sampled sewer water only	No sediment present
MH-11	Sampled sewer water and sediment	Sampled in lieu of MH-5 with NYSDEC approval
MH-38	Sampled sewer water and sediment	Sampled in lieu of MH-37 with NYSDEC approval
MH-40	Sampled sewer water and sediment	
MH-42	Sampled sewer water and sediment	
MH-45	Sampled sewer water and sediment	
MH-51	Sampled sewer water only	No sediment present
MH-52	Sampled sewer water and sediment	
MH-69	Sampled sewer water and sediment	

4.2.2.4 Flow Monitoring

Flow monitoring data was collected using a Flow-Mate Model 2000 portable flow meter. The Flow-Mate Model 2000 is a handheld, battery powered electromagnetic water velocity meter with digital LCD display that provides an instantaneous readout. The electromagnetic sensor was attached to a wading rod and lowered down into the middle of the water stream through the manhole. The water stream flow rate through the manhole was then read off the LCD display. The sensor and wading rod were appropriately decontaminated after each use.

4.2.3 Task 3: Sewer Camera Inspection

This task was mainly designed to evaluate specific locations between manholes identified after results from Task 2 were evaluated. Based on Task 2 results, no sewer camera inspections were warranted.

4.2.4 Task 4: Oversight of ESA Project Sewer Modification Work

Modifications to the Sewer System have occurred after submission of the OU-5 Work Plan to the NYSDEC. Under this task, a summary of significant ESA Project sewer work update has been included in this report. Prior to and during implementation of sewer sampling proposed in the OU-5 RI Work Plan, the extensive influence of ESA sewer system modifications and dewatering activities at the Yard and the associated discharges to Yard sewers were observed. These ESA discharging activities and the previously noted placement of a weir in MH-40 have significantly altered the intended flow throughout the primary sewer system at the Yard.

Harold Structures – Part 1 and G.O.2 Substation (Contract CH053)

Work under this contract included the removal of an inactive 36-inch storm sewer located just west of the 39th Street Bridge, and the installation of a new north-south storm sewer. This contract was completed during the 2010 construction season. The new line crosses the existing 36-inch storm sewer line, and according to ESA representatives, the existing line is not presently connected to any existing sewer line serving the Yard and was abandoned in place and filled in with concrete to eliminate any potential future conflicts. The new north-south storm sewer has been constructed to handle flow from the new approach structures. This new line connects to the existing east-west combined sewer line near MH-12, but is not yet in service (Plate 3).

Harold Structures – Part 2 (Contract CH054)

Work under this contract includes construction of an approximately 2,600-foot long storm sewer currently being installed parallel to Skillman Avenue as shown on Plate 3. Plans to remove the sewer segment from MH-56 to MH-57 were scheduled to commence in 2012. However, according to ESA representatives, the segment of storm sewer from CB-16 to downstream of MH-57 will not be abandoned or removed and will remain in service.

Queens Bored Tunnels, Structures, and Track Work (Contract CQ031)

This Contract consists of three separate elements as shown in Plate 3. One of the elements of this contract was the relocation of the 48-inch combined sewer segment from MH-53 to MH-55, which was found to interfere with the launch wall for the Tunnel Boring Machine (completed). Discharge associated with this modification and work associated with the launch wall construction has influenced flow at downstream manhole MH-2. Additionally, dewatering water associated with construction of the ESA Yard Lead Tunnel at the east end of the Yard is discharged to the 48-inch storm water sewer along the northern border of the Yard at manhole MH-13, influencing flow from there downstream to manhole MH-40. The remaining elements of this contract involved the proposed tunnel emergency exit location that interfered with a portion of the existing sewer line from MH-45 to MH-44. According to ESA representatives, the flow from MH-45 will be diverted to a new 42-inch sewer pipe provided to bypass the proposed tunnel emergency exit (ESA is currently installing new manhole as part of modifications to this part of the sewer system) before reaching MH-44.

5.0 NATURE AND EXTENT OF PCB CONTAMINATION

The purpose of this section is to provide a comprehensive evaluation of the nature and extent of PCB contamination in sewer sediment and water in the primary sewer system at the Yard, based on the collective findings of OU-5 RI and the previous investigations discussed in Section 3.0. The remainder of this section discusses sample results collected for both sample media, and identifies sewer segments and manhole locations where concentrations of PCBs in sewer sediment exceeded the Yard soil cleanup level or sewer water exceeded the NYCDEP waste water effluent limit.

5.1 PCBS in Sewer Sediment

In summary, for all OU-5 investigations a total of 64 discrete sewer sediment samples have been collected from 17 manhole locations in the primary sewer system and analyzed for PCBs (Note that "blind duplicate samples" collected for laboratory QA/QC purposes are not included in these totals nor presented in data tables or maps). Of those 64 discrete sediment samples, 61 samples contained PCBs at concentrations that ranged from 65 µg/kg to a high of 160,000 µg/kg. Thirteen samples from nine manhole locations contained PCBs at concentrations that exceeded the 25,000 µg/kg NYSDEC-recommended soil cleanup level for the Yard. A summary of PCB concentrations in sewer sediment is provided in Table 1 and shown on Plate 2.

In February 1993, during performance of the Phase II RI at the Yard, initial sewer sediment samples were collected at manhole locations, MH-2, MH-3, and MH-8 and analyzed for PCBs. All three locations sampled were found to contain PCBs, at concentrations ranging from 4,200 µg/kg at MH-8 to 82,000 at MH-2. PCB concentrations at locations MH-2 and MH-3 exceeded the current 25,000 µg/kg NYSDEC-recommended soil cleanup level for the Yard.

In April 1994, during performance of the Addendum to the Phase 11 RI, 12 discrete sewer sediment samples were collected at 10 manhole locations, MH-2, MH-29, MH-35, MH-37, MH-40, MH-42, MH-45, MH-52, MH-55, and MH-69 and analyzed for PCBs. All 12 samples were found to contain PCBs at concentrations ranging from 170 µg/kg (MH-29) to 51,000 µg/kg at MH-42. PCB concentrations at locations MH-42 and MH-69 exceeded the current 25,000 µg/kg NYSDEC-recommended soil cleanup level for the Yard.

During June and July of 1996, an extensive cleanout from 20 of 23 proposed manhole and catch basin locations was performed (MH-3 and MH-52 had no sediment and catch basin CB-7 could not be located). Sediment, if found, was removed and properly disposed by Clean Harbors. On July 26, 1996, following completion of the sediment removal and disposal project, sediment samples were collected from manhole locations MH-2, MH-40, and MH-42 for PCB analyses (on August 15, 1996, manhole location MH-42 was re-sampled to replace the July 26, 1996 sample lost by the Laboratory). All three locations sampled were found to contain PCBs at concentrations ranging from 2,610 µg/kg at MH-42 to 148,900 at MH-40. PCB concentrations at locations MH-2 and MH-40 exceeded the current 25,000 µg/kg NYSDEC-recommended soil cleanup level for the Yard.

On November 12 and 13, 1996, the manhole and catch basin cleanout locations were again visually inspected and 11 of the locations (CB-4, MH-2, MH-3, MH-5, MH-8, MH-37, MH-40, MH-42, MH-52, MH-55, and MH-69) were determined to have adequate sediment accumulation and were sampled for PCB analyses. All 11 locations were found to contain PCBs at concentrations ranging from 145 µg/kg at MH-69 to 160,900 at MH-40. PCB concentrations at locations MH-3, MH-37 and MH-40 exceeded the current 25,000 µg/kg NYSDEC-recommended soil cleanup level for the Yard.

On February 4 and 5, 1997, sandbag traps were placed in manholes MH-2, MH-3, MH-5, MH-11, MH-36, and MH-52 to facilitate sediment accumulation. On March 11, 1997, three of these locations (MH-3, MH-11 and MH-52,) were found to have adequate sediment accumulation behind the sandbags and were sampled for PCB analyses. All three locations were found to contain PCBs at concentrations ranging from 1,000 µg/kg at MH-11 to 91,100 at MH-52. PCB concentrations at MH-52 exceeded the current 25,000 µg/kg NYSDEC-recommended soil cleanup level for the Yard.

Starting on October 11, 2010 through March 17, 2011, the OU-5 RI sewer sediment sampling plan was implemented. In all, 32 discrete sediment samples were collected from 12 manhole locations and analyzed for PCBs during performance of the OU-5 RI. PCBs were detected in 29 of these samples at concentrations ranging from 53 µg/kg at MH-69 to 120,000 µg/kg at MH-6.

PCB concentrations at MH-6 and MH-38 exceeded the 25,000 µg/kg NYSDEC-recommended soil cleanup level for the Yard.

5.2 PCBs in Sewer Water

A total of 109 sewer water samples (64 unfiltered and 45 filtered) have been collected from 18 manhole locations in the primary sewer system at the Yard and analyzed for PCBs. Of those 109 sewer water samples, 10 samples (nine unfiltered and one filtered) collected from seven manhole locations were determined to contain PCB concentrations that exceeded the NYCDEP one µg/L waste water effluent limit to combined (storm and sanitary) sewers.

In February 1993, during performance of the Phase II RI at the Yard, initial sewer water samples (unfiltered) were collected at manhole locations MH-2, MH-3, MH-5, MH-7, and MH-8 and analyzed for PCBs. PCBs were not detected in samples from MH-3 and MH-5, while the other three samples contained PCB concentrations that exceeded the one µg/L NYCDEP waste water effluent limit.

In April 1994, during performance of the Addendum to the Phase 11 RI, 14 discrete sewer water samples were collected at seven manhole locations, MH-2 (filtered and unfiltered), MH-29, MH-39, MH-40 (filtered and unfiltered and multiple inlets), MH-43, MH-52 (filtered and unfiltered and multiple inlets), and MH-69 and analyzed for PCBs. PCBs were not detected in 10 samples. PCBs were detected in four unfiltered samples from locations MH-2 and MH-40, MH-39 and the sample from MH-69, the only sample to exceed the one µg/L waste water effluent limit.

On July 26, 1996, following completion of the sediment removal and disposal project, 11 sewer water samples were collected from eight manhole locations; MH-2 (filtered and unfiltered), MH-3 (filtered and unfiltered), MH-5, MH-6, MH-37, MH-40 (filtered and unfiltered), MH-42 and MH-52 and analyzed for PCBs. All samples contained PCBs with concentrations that ranged from a low of 0.015 µg/L (MH-6) to 0.89 µg/L (MH-3).

Starting on October 11, 2010 through March 17, 2011, the OU-5 RI sewer water sampling plan was implemented. In all, 78 discrete water samples (39 filtered and 39 unfiltered) were collected

from 12 manhole locations and analyzed for PCBs during performance of the OU-5 RI. PCBs were detected in 17 of 39 unfiltered samples with concentrations ranging from 0.14 µg/L to a high of 83 µg/L. Five of these samples, one from MH-3, three from MH-6 and one from MH-40 exceeded the one µg/L waste water effluent limit. Only one of the 39 filtered samples (MH-3) contained PCBs at a concentration (1.8 µg/L) slightly exceeding the one µg/L waste water effluent limit.

5.3 Summary of PCB Contamination in Sewer Sediment and Sewer Water

Sampling results for all sewer sediment and sewer water samples collected from the primary sewer system and analyzed for PCBs are provided in Tables 1 and 2 and are shown on Plate 2. As previously noted, since February 1993, 64 discrete sewer sediment samples have been collected from 17 manhole locations in the primary sewer system for the OU-5 RI. A total of 13 of these sediment samples from nine manhole locations contained PCBs at a concentration that exceeded the 25,000 µg/kg NYSDEC-recommended soil cleanup level for the Yard. Subsequent to the June/July 1996 manhole cleanout program, PCBs in sediment exceeding the 25,000 µg/kg NYSDEC-recommended soil cleanup level were found in samples from manholes MH-2, MH-3, MH-6, MH-37, MH-38, MH-40 and MH-52. During performance of the OU-5 RI Work Plan in 2010 and 2011, PCBs in sediment exceeding the 25,000 µg/kg NYSDEC-recommended soil cleanup level were found only in samples from manholes MH-6 and MH-38. Note that during the approximate 14 year span between the implementation of the OU-5 RI Work Plan and the prior sampling associated with OU-5, Amtrak has conducted significant PCB remediation activities throughout the Yard. This has included the removal of PCB-impacted soils and SPH in OU-3, as well as the removal of PCB-containing soils in OU-1 and OU-4. Amtrak's Yard-wide remediation activities are very likely the reason for this significant reduction in PCB-containing sewer sediments between 1996/1997 sampling and the 2010/2011 OU-5 RI Sampling.

Starting in February 1993, a total of 109 sewer water samples (64 unfiltered and 45 filtered) were collected from 18 manhole locations in the primary sewer system at the Yard and analyzed for PCBs. As presented above, ten samples (nine unfiltered and one filtered) collected from seven manhole locations were found to contain PCBs that exceeded the NYCDEP one µg/L waste water effluent limit to combined sewers. Following the June/July 1996 manhole cleanout program, PCBs in sewer water exceeding the NYCDEP one µg/L waste water effluent limit to combined

sewers were found in six of 89 samples collected from manholes MH-3 (one filtered and one unfiltered), MH-6 (three unfiltered samples) and MH-40 (one unfiltered).

5.4 Location of Areas Requiring Further Evaluation

The following section provides a discussion of the physical locations of areas requiring further evaluation within the primary sewer system at the Yard. This discussion considers not only the data generated on 2010 and 2011 as part of the OU-5 RI, but also considers all historic data generated after June and July 1996 (i.e., following the cleanout of select manholes within the primary sewer system). Historic data generated prior to the June and July 1996 cleanout is included in this RI Report for completeness, however, this data is not discussed further in this section. Plate 4 provides a graphical representation of the locations requiring evaluation as part of the Feasibility Study. The rationale for requiring further evaluation of the locations is provided below:

Manhole	**Rationale**
MH-2, 3, 6*, 37, 38, 40 and 52	Post-1996 Cleanout exceedance of soil cleanup level (only samples from MH-6 and MH-38 exceeded the soil cleanup level during the three 2010/2011 RI sampling events)
MH-3, MH-6*, MH-40	Post-1996 Cleanout exceedance of NYCDEP wastewater effluent limit
MH-2 & MH-40	Accumulated sanitary waste and sediment (predominantly sanitary waste) are present within the 8-foot x 4-foot culvert that connects MH-2 and MH-40 - the 360 feet long culvert has no access for sampling

* *An Interim Remedial Measure Work Plan (IRM WP) has been submitted to NYSDEC for the remediation of sewer manhole MH-6 as an IRM (see Section 6.2 below). Pending the successful implementation of this IRM WP, MH-6 may be excluded from evaluation in the OU-5 FS since further remediation in this manhole may not be warranted.*

As presented above, manholes MH-2, MH-3, MH-6, MH-37, MH-38, MH-40, and MH-52 contain elevated PCB concentrations in sediment and/or water (either during the 2010 and 2011 RI sampling activities, or historically following the 1996 sewer cleanout). Based on this evaluation,

sewers requiring further evaluation during the Feasibility Study can be grouped into three areas or Sewer Legs as follows:

Sewer Leg ID	**Starting Point**	**Ending Point**
Sewer Leg 1	MH-4 and MH-6	MH-40
Sewer Leg 2	MH-36	MH-40
Sewer Leg 3	MH-56	MH-53

The locations of each Sewer Leg are presented in Plate 4.

6.0 PLANNED FEASIBILITY STUDY

Following completion and NYSDEC approval of the OU-5 Final RI Report, an OU-5 Feasibility Study Report will be prepared. The OU-5 Feasibility Study Report will consider all data included in the RI Report as well as status of remedial activities in OU-3 and OU-4.

Roux Associates has identified potential remedial action alternatives for OU-5 based upon an evaluation of the data developed during previous investigations. The purpose of identifying potential alternatives in the OU-5 RI is to verify that data needed to support a detailed evaluation of these alternatives in a feasibility study were collected during the RI.

6.1 Sewer Sediment

Based upon our current understanding of OU-5 conditions and review of the analytical data, remedial alternatives that may be suitable for OU-5 sewer sediment include the following:

- no action; and
- sewer sediment vacuum removal and offsite disposal.

These preliminarily identified alternatives represent a range of response actions that are consistent with USEPA and NYSDEC guidance documents.

6.1.1 No Action

The no action alternative will be evaluated to provide a comparative baseline for the evaluation of other remedial alternatives. The no action alternative will include monitoring and/or institutional controls. The evaluation of this alternative will consider the following:

- the nature and extent of contamination;
- the migration potential for the contaminants; and
- the potential exposure scenarios.

6.1.2 Sewer Sediment Vacuum Removal and Offsite Disposal

The sewer sediment removal alternative would consist of vacuum removal of sediments from selected manholes where PCBs were found in exceedance of the 25,000 µg/kg NYSDEC-recommended soil cleanup level. Sediment removal performance would be monitored and additional removal would be performed if recurrence of sediments exceeding the cleanup criteria

were found. Removal of sediments would require removal of sewer water as necessary as the vacuum method would remove both media in the manhole and immediately adjacent sewer.

Removal of sediments would be planned over time to occur after completion of related remediation work in OU-3 and OU-4. Related remediation work in OU-3 and OU-4 consists of removal of SPH and soil containing PCBs above the cleanup criteria. These areas are considered potential sources of impacts on the sewer system.

The sediment removal action alternative will include monitoring and/or institutional controls. The evaluation of this alternative will consider the following:

- the nature and extent of contamination;
- the migration potential for the contaminants; and
- the potential exposure scenarios.

6.2 Proposed MH-6 Cleanout

Amtrak intends to obtain a NYCDEP discharge permit to utilize MH-6 (located in OU-3) for the discharge of clean, treated water as part of future remediation activities within OU-3. As such, Amtrak plans to cleanout MH-6 in the near future prior to utilizing this manhole for the discharge of clean water. In addition to the removal and off-site disposal of PCB-containing sediments, Amtrak will also property cap and seal inactive sewer lines entering the manhole from former structures demolished in OU-3.

To facilitate the timely remediation of MH-6, Roux Associates submitted a revised plan to NYSDEC for this work dated August 23, 2011 in the form of an OU-5 Interim Remedial Measure Work Plan (IRM WP). Results of this cleanout will be documented in an OU-5 Construction Completion Report (CCR), or in the OU-5 FS if post-remediation sampling data dictates additional work in MH-6 is warranted.

7.0 CONCLUSIONS AND RECOMMENDATIONS

The findings presented in this OU-5 RI indicate the following:

- An extensive sewer sediment and sewer water sampling program was completed [i.e., 64 sewer sediment samples and 109 sewer water samples (69 unfiltered and 45 filtered) collected and analyzed for PCBs].

- An extensive IRM program was completed in 1996 to remove PCB contaminated sediment from impacted sewer manholes with subsequent sampling to identify sewer segments and manholes with recurring PCB contaminated sediment impacts.

- Areas with recurring PCB contaminated sediments (current or previous) exceeding NYSDEC-recommended Yard soil cleanup level concentrations have been identified (shown on Plate 2).

- Based on their chemical nature (PCBs are relatively immobile in soil) and extremely low solubility in water, sewer water sampling results (unfiltered and filtered) indicate that PCB detections in sewer water samples were likely the result of contaminated sediment particles being suspended in the sewer water by agitation prior to sample collection or sampling turbid water during high flow volume conditions.

The PCB-containing sediments found in OU-5 are likely the result of erosion of PCB contaminated soil within the Yard during storm events that enters the combined sewer through track drains or open grate manhole covers. Once in the sewer, sediment can accumulate in manholes constructed with sediment traps, at low spots or confluence points within manholes during low flow periods (particularly in segments where flow is primarily storm related with little or no sanitary contribution) or at obstructions such as weirs designed to restrict flow. Given the nature and extent of PCB contamination identified in OU-5, and the likely connection to remaining PCB "hotspot" contamination in OU-4 at the Yard, it is recommended that a focused FS be performed that will evaluate remedial alternatives that are amenable to addressing recurring PCB contamination in an active railyard. The focused FS will propose the following:

- sediment removal at manhole locations known to contain PCBs at concentrations that exceed the Yard soil cleanup level (see Plate 4);

- monitoring selected manholes at 2-year intervals until such time as the ESA project and PCB "hotspot" contamination in OU-4 are no longer impacting the primary sewer system at the Yard; and

- sediment removal (as appropriate) from manhole locations where recurring sediment contains PCBs at concentrations that exceed the Yard soil cleanup level.

Respectfully submitted,

ROUX ASSOCIATES, INC.

Harry Gregory
Senior Hydrogeologist

Joseph D. Duminuco
Principal Hydrogeologist/
Vice President

8.0 REFERENCES

Roux Associates, 1993. Work Plan for the Additional Investigation of the Sewer System, Sunnyside Yard, Queens, New York. June 17, 1993; revised August 10, 1993.

Roux Associates, 1994. Results of Sewer Sampling Program and Oil/Water Separator Inspection and Evaluation, Sunnyside Yard, Queens, New York. September 6, 1994.

Roux Associates, 1995. Phase II Remedial Investigation, Sunnyside Yard, Queens, New York. February 15, 1995.

Roux Associates, 1996. Summary of the Results for the June-July 1996 Sewer Sampling Program and Recommended Scope of Work, Sunnyside Yard, Queens, New York. November 1, 1996.

Roux Associates, 1997. Summary of the Results for the Expanded Sewer System Investigation, Sunnyside Yard, Queens, New York. August 28, 1997.

East Side Access, 2008. Queens Construction within Amtrak Sunnyside Yard. Construction Contamination Site Management Plan and Final Stipulations List.

TABLES

Table 1. Summary of Polychlorinated Biphenyl Compound Concentrations in Sewer-Sediment Samples Collected in the Primary Sewer System, Sunnyside Yard, Queens, NY

Parameter (Concentrations in µg/kg)	Site-Specific Cleanup Level	**Sample Designation:** **Sample Date:** **Location:**	CB-4 11/12/1996	MHS-2 2/9/1993	MHS-2 4/26/1994	MHS-2DL 7/26/1996	MH-2 11/12/1996	MHS-2* 10/12/2010 Pipe From MH-41
Aroclor-1016	--		2000 U	5400 U	1200 U	5300 U	2200 U	39 U
Aroclor-1221	--		4000 U	11000 U	1200 U	11000 U	4400 U	39 U
Aroclor-1232	--		2000 U	5400 U	1200 U	5300 U	2200 U	39 U
Aroclor-1242	--		2000 U	5400 U	1200 U	5300 U	2200 U	39 U
Aroclor-1248	--		590 J	5400 U	2000 J	6100	660 J	39 U
Aroclor-1254	--		4200	24000 V	2400 U	11000 D	3100	39 U
Aroclor-1260	--		2600	58000 V	9900 J	37000 D	5000	1800
Aroclor-1262	--		NA	NA	NA	NA	NA	39 U
Aroclor-1268	--		NA	NA	NA	NA	NA	39 U
Total PCBs	25000		7390	**82000**	11900	**54100**	8760	1800

J - Estimated value
U - Indicates that the compound was analyzed for but not detected
V – Qualifier added and/or value altered during validation
D - Compound identified in an analysis at a secondary dilution
NA - Not analyzed for by laboratory
µg/kg - Micrograms per kilogram
PCBs - Polychlorinated Biphenyls
Bolded results indicate that the compound exceeds the Site-Specific Cleanup Levels
* - Sample designation edited to include "S" to reflect sample is a sediment matrix

Table 1. Summary of Polychlorinated Biphenyl Compound Concentrations in Sewer-Sediment Samples Collected in the Primary Sewer System, Sunnyside Yard, Queens, NY

Parameter (Concentrations in µg/kg)	Site-Specific Cleanup Level	**Sample Designation:** **Sample Date:** **Location:**	MHS-2* 10/12/2010 Pipe From MH-55	MHS-2 3/16/2011 Pipe From MH-41	MHS-2 3/16/2011 Pipe From MH-55	MHS-2 3/17/2011 Pipe From MH-41
Aroclor-1016	--		35 U	63 U	38 U	32 U
Aroclor-1221	--		35 U	63 U	38 U	32 U
Aroclor-1232	--		35 U	63 U	38 U	32 U
Aroclor-1242	--		35 U	63 U	38 U	32 U
Aroclor-1248	--		35 U	63 U	38 U	32 U
Aroclor-1254	--		35 U	63 U	38 U	32 U
Aroclor-1260	--		510	1200	2600 JV	920
Aroclor-1262	--		35 U	63 U	38 U	32 U
Aroclor-1268	--		35 U	63 U	38 U	32 U
Total PCBs	25000		510	1200	2600 JV	920

J - Estimated value
U - Indicates that the compound was analyzed for but not detected
V – Qualifier added and/or value altered during validation
D - Compound identified in an analysis at a secondary dilution
NA - Not analyzed for by laboratory
µg/kg - Micrograms per kilogram
PCBs - Polychlorinated Biphenyls
Bolded results indicate that the compound exceeds the Site-Specific Cleanup Levels
* - Sample designation edited to include "S" to reflect sample is a sediment matrix

Table 1. Summary of Polychlorinated Biphenyl Compound Concentrations in Sewer-Sediment Samples Collected in the Primary Sewer System, Sunnyside Yard, Queens, NY

Parameter (Concentrations in µg/kg)	Site-Specific Cleanup Level	**Sample Designation:**	MHS-2	MHS-3	MH-3	MHS-3	MHS-3*	MH-5	MHS-6*
		Sample Date:	3/17/2011	2/8/1993	11/13/1996	3/11/1997	10/11/2010	11/13/1996	10/11/2010
		Location:	Pipe From MH-55						
Aroclor-1016	--		34 U	4100 U	8100 U	210 U	36 U	8900 U	4000 U D
Aroclor-1221	--		34 U	8400 U	16000 U	420 U	36 U	18000 U	4000 U D
Aroclor-1232	--		34 U	4100 U	8100 U	210 U	36 U	8900 U	4000 U D
Aroclor-1242	--		34 U	3000 JV	8100 U	210 U	36 U	8900 U	4000 U D
Aroclor-1248	--		34 U	4100 U	2500 J	210 U	36 U	8900 U	4000 U D
Aroclor-1254	--		1100	29000 V	17000	520	36 U	16000	4000 U D
Aroclor-1260	--		34 U	22000 V	13000	860	36 U	2800 J	120000 D
Aroclor-1262	--		34 U	NA	NA	NA	36 U	NA	4000 U D
Aroclor-1268	--		34 U	NA	NA	NA	36 U	NA	4000 U D
Total PCBs	25000		1100	**54000**	**32500**	1380	0	18800	**120000**

J - Estimated value
U - Indicates that the compound was analyzed for but not detected
V – Qualifier added and/or value altered during validation
D - Compound identified in an analysis at a secondary dilution
NA - Not analyzed for by laboratory
µg/kg - Micrograms per kilogram
PCBs - Polychlorinated Biphenyls
Bolded results indicate that the compound exceeds the Site-Specific Cleanup Levels
* - Sample designation edited to include "S" to reflect sample is a sediment matrix

Table 1. Summary of Polychlorinated Biphenyl Compound Concentrations in Sewer-Sediment Samples Collected in the Primary Sewer System, Sunnyside Yard, Queens, NY

Parameter (Concentrations in µg/kg)	Site-Specific Cleanup Level	**Sample Designation:**	MHS-6	MHS-6	MHS-8DL	MH-8	MHS-8	MH-11	MHS-11*	MHS-11
		Sample Date:	3/16/2011	3/17/2011	2/9/1993	11/12/1996	3/16/2011	3/11/1997	10/11/2010	3/16/2011
		Location:								
Aroclor-1016	--		37 U	36 U	430 U	39 U	45 U	2100 U	33 U	33 U
Aroclor-1221	--		37 U	36 U	870 U	79 U	45 U	4300 U	33 U	33 U
Aroclor-1232	--		37 U	36 U	430 U	39 U	45 U	2100 U	33 U	33 U
Aroclor-1242	--		740 UV	720 UV	430 U	39 U	45 U	2100 U	33 U	33 U
Aroclor-1248	--		740 UV	720 UV	430 U	39 U	45 U	2100 U	33 U	33 U
Aroclor-1254	--		740 UV	720 UV	1300 JV	40	45 U	2100 U	33 U	33 U
Aroclor-1260	--		21000	15000 JV	2900 V	100	45 U	1000 J	520	500
Aroclor-1262	--		37 U	36 U	NA	NA	45 U	NA	33 U	33 U
Aroclor-1268	--		37 U	36 U	NA	NA	45 U	NA	33 U	33 U
Total PCBs	25000		21000	15000 JV	4200	140	0	1000	520	500

J - Estimated value
U - Indicates that the compound was analyzed for but not detected
V – Qualifier added and/or value altered during validation
D - Compound identified in an analysis at a secondary dilution
NA - Not analyzed for by laboratory
µg/kg - Micrograms per kilogram
PCBs - Polychlorinated Biphenyls
Bolded results indicate that the compound exceeds the Site-Specific Cleanup Levels
* - Sample designation edited to include "S" to reflect sample is a sediment matrix

Table 1. Summary of Polychlorinated Biphenyl Compound Concentrations in Sewer-Sediment Samples Collected in the Primary Sewer System, Sunnyside Yard, Queens, NY

Parameter (Concentrations in µg/kg)	Site-Specific Cleanup Level	**Sample Designation:**	MHS-11	MHS-29	MHS-35	MHS-37	MH-37	MHS-38*	MHS-38	MHS-38
		Sample Date:	3/17/2011	4/27/1994	4/28/1994	4/28/1994	11/12/1996	10/12/2010	3/16/2011	3/17/2011
		Location:								
Aroclor-1016	--		33 U	100 U	170 U	510 U	8400 U	350 U D	31 U	35 U
Aroclor-1221	--		33 U	100 U	170 U	510 U	17000 U	350 U D	31 U	35 U
Aroclor-1232	--		33 U	100 U	170 U	510 U	8400 U	350 U D	31 U	35 U
Aroclor-1242	--		33 U	100 U	700	510 U	8400 U	350 U D	620 UV	1800 UV
Aroclor-1248	--		33 U	100 U	170 U	510 U	8400 U	350 U D	620 UV	1800 UV
Aroclor-1254	--		33 U	200 U	340 U	1000 U	7000 J	350 U D	620 UV	1800 UV
Aroclor-1260	--		380	170 J	250 J	9400	31000	7800 D	30000	83000 JV
Aroclor-1262	--		33 U	NA	NA	NA	NA	350 U D	31 U	35 U
Aroclor-1268	--		33 U	NA	NA	NA	NA	350 U D	31 U	35 U
Total PCBs	25000		380	170	950	9400	**38000**	7800	**30000**	**83000 JV**

J - Estimated value
U - Indicates that the compound was analyzed for but not detected
V – Qualifier added and/or value altered during validation
D - Compound identified in an analysis at a secondary dilution
NA - Not analyzed for by laboratory
µg/kg - Micrograms per kilogram
PCBs - Polychlorinated Biphenyls
Bolded results indicate that the compound exceeds the Site-Specific Cleanup Levels
* - Sample designation edited to include "S" to reflect sample is a sediment matrix

Table 1. Summary of Polychlorinated Biphenyl Compound Concentrations in Sewer-Sediment Samples Collected in the Primary Sewer System, Sunnyside Yard, Queens, NY

Parameter (Concentrations in µg/kg)	Site-Specific Cleanup Level	**Sample Designation:**	MHS-40	MHS-40	MHS-40	MH-40	MHS-40*	MHS-40	MHS-40	MHS-42
		Sample Date:	4/25/1994	4/25/1994	7/26/1996	11/13/1996	10/12/2010	3/16/2011	3/17/2011	4/26/1994
		Location:	(48) E	(4x8) S						
Aroclor-1016	--		1000 U	1000 U	8000 U	46000 U	31 U	33 U	30 U	2100 U
Aroclor-1221	--		1000 U	1000 U	16000 U	94000 U	31 U	33 U	30 U	2100 U
Aroclor-1232	--		1000 U	1000 U	8000 U	46000 U	31 U	33 U	30 U	2100 U
Aroclor-1242	--		1000 U	1000 U	8000 U	46000 U	31 U	33 U	30 U	2100 U
Aroclor-1248	--		5200 J	2100 J	4900 J	46000 U	31 U	33 U	30 U	13000 J
Aroclor-1254	--		2000 U	2000 U	34000	50000	31 U	33 U	30 U	4300 U
Aroclor-1260	--		11000 J	13000 J	110000	110000	31 UJV	65	130	38000 J
Aroclor-1262	--		NA	NA	NA	NA	31 U	33 U	30 U	NA
Aroclor-1268	--		NA	NA	NA	NA	31 U	33 U	30 U	NA
Total PCBs	25000		16200	15100	**148900**	**160000**	0	65	130	**51000**

J - Estimated value
U - Indicates that the compound was analyzed for but not detected
V – Qualifier added and/or value altered during validation
D - Compound identified in an analysis at a secondary dilution
NA - Not analyzed for by laboratory
µg/kg - Micrograms per kilogram
PCBs - Polychlorinated Biphenyls
Bolded results indicate that the compound exceeds the Site-Specific Cleanup Levels
* - Sample designation edited to include "S" to reflect sample is a sediment matrix

Table 1. Summary of Polychlorinated Biphenyl Compound Concentrations in Sewer-Sediment Samples Collected in the Primary Sewer System, Sunnyside Yard, Queens, NY

Parameter (Concentrations in µg/kg)	Site-Specific Cleanup Level	**Sample Designation:** **Sample Date:** **Location:**	MHS-42DL 8/15/1996	MH-42 11/12/1996	MHS-42* 10/12/2010	MHS-42 3/16/2011	MHS-42 3/17/2011	MHS-45 4/28/1994	MHS-45* 10/11/2010
Aroclor-1016	--		33 U	2200 U	35 U	35 U	36 U	110 U	32 U
Aroclor-1221	--		67 U	4500 U	35 U	35 U	36 U	110 U	32 U
Aroclor-1232	--		33 U	2200 U	35 U	35 U	36 U	110 U	32 U
Aroclor-1242	--		33 U	2200 U	35 U	35 U	36 U	110 U	32 U
Aroclor-1248	--		33 U	2200 U	110	35 U	36 U	53 J	150 JV
Aroclor-1254	--		610	3100	35 U	35 U	1100 UV	700 J	32 U
Aroclor-1260	--		2000D	2300	1300	900	1200 JV	750 J	1900 JV
Aroclor-1262	--		NA	NA	35 U	35 U	36 U	NA	32 U
Aroclor-1268	--		NA	NA	35 U	35 U	36 U	NA	32 U
Total PCBs	25000		2610	5400	1410	900	1200 JV	1503	2050 JV

J - Estimated value
U - Indicates that the compound was analyzed for but not detected
V – Qualifier added and/or value altered during validation
D - Compound identified in an analysis at a secondary dilution
NA - Not analyzed for by laboratory
µg/kg - Micrograms per kilogram
PCBs - Polychlorinated Biphenyls
Bolded results indicate that the compound exceeds the Site-Specific Cleanup Levels
* - Sample designation edited to include "S" to reflect sample is a sediment matrix

Table 1. Summary of Polychlorinated Biphenyl Compound Concentrations in Sewer-Sediment Samples Collected in the Primary Sewer System, Sunnyside Yard, Queens, NY

Parameter (Concentrations in µg/kg)	Site-Specific Cleanup Level	**Sample Designation:**	MHS-45	MHS-45	MHS-52	MH-52	MH-52	MHS-52*	MHS-52	MHS-52
		Sample Date:	3/16/2011	3/17/2011	4/26/1994	11/12/1996	3/11/1997	10/12/2010	3/16/2011	3/17/2011
		Location:								
Aroclor-1016	--		31 U	38 U	110 U	2300 U	8500 U	33 U	31 U	33 U
Aroclor-1221	--		31 U	38 U	110 U	4700 U	17000 U	33 U	31 U	33 U
Aroclor-1232	--		31 U	38 U	110 U	2300 U	8500 U	33 U	31 U	33 U
Aroclor-1242	--		31 U	38 U	110 U	2300 U	8500 U	33 U	31 U	33 U
Aroclor-1248	--		31 U	38 U	110 U	2300 U	8100 J	33 U	31 U	33 U
Aroclor-1254	--		31 U	38 U	1600 J	4300	34000	33 U	31 U	33 U
Aroclor-1260	--		180	600	1300 J	4300	49000	540	340	310
Aroclor-1262	--		31 UJV	38 U	NA	NA	NA	33 U	31 U	33 U
Aroclor-1268	--		31 UJV	38 U	NA	NA	NA	33 U	31 U	33 U
Total PCBs	25000		180	600	2900	8600	**91100**	540	340	310

J - Estimated value
U - Indicates that the compound was analyzed for but not detected
V – Qualifier added and/or value altered during validation
D - Compound identified in an analysis at a secondary dilution
NA - Not analyzed for by laboratory
µg/kg - Micrograms per kilogram
PCBs - Polychlorinated Biphenyls
Bolded results indicate that the compound exceeds the Site-Specific Cleanup Levels
* - Sample designation edited to include "S" to reflect sample is a sediment matrix

Table 1. Summary of Polychlorinated Biphenyl Compound Concentrations in Sewer-Sediment Samples Collected in the Primary Sewer System, Sunnyside Yard, Queens, NY

Parameter (Concentrations in µg/kg)	Site-Specific Cleanup Level	**Sample Designation:**	MHS-55	MH-55	MHS-69	MHS-69	MH-69	MHS-69*	MHS-69
		Sample Date:	4/26/1994	11/12/1996	4/28/1994	4/28/1994	11/12/1996	10/12/2010	3/16/2011
		Location:			(18) NE	(36) E			
Aroclor-1016	--		1000 U	970 U	1100 U	2000 U	40 U	32 U	29 U
Aroclor-1221	--		1000 U	2000 U	1100 U	2000 U	82 U	32 U	29 U
Aroclor-1232	--		1000 U	970 U	1100 U	2000 U	40 U	32 U	29 U
Aroclor-1242	--		1000 U	970 U	1100 U	2000 U	40 U	32 U	29 U
Aroclor-1248	--		1000 U	500 J	1100 U	2000 U	40 U	32 U	29 U
Aroclor-1254	--		13000 J	2100	2100 U	4100 U	46	32 U	29 U
Aroclor-1260	--		12000 J	1700	4700	29000 J	99	72	53
Aroclor-1262	--		NA	NA	NA	NA	NA	32 U	29 U
Aroclor-1268	--		NA	NA	NA	NA	NA	32 U	29 U
Total PCBs	25000		25000	4300	4700	**29000**	145	72	53

J - Estimated value
U - Indicates that the compound was analyzed for but not detected
V – Qualifier added and/or value altered during validation
D - Compound identified in an analysis at a secondary dilution
NA - Not analyzed for by laboratory
µg/kg - Micrograms per kilogram
PCBs - Polychlorinated Biphenyls
Bolded results indicate that the compound exceeds the Site-Specific Cleanup Levels
* - Sample designation edited to include "S" to reflect sample is a sediment matrix

Table 1. Summary of Polychlorinated Biphenyl Compound Concentrations in Sewer-Sediment Samples Collected in the Primary Sewer System, Sunnyside Yard, Queens, NY

Parameter (Concentrations in µg/kg)	Site-Specific Cleanup Level	**Sample Designation:**	MHS-69
		Sample Date:	3/17/2011
		Location:	
Aroclor-1016	--		30 U
Aroclor-1221	--		30 U
Aroclor-1232	--		30 U
Aroclor-1242	--		30 U
Aroclor-1248	--		30 U
Aroclor-1254	--		30 U
Aroclor-1260	--		76
Aroclor-1262	--		30 U
Aroclor-1268	--		30 U
Total PCBs	25000		76

J - Estimated value
U - Indicates that the compound was analyzed for but not detected
V – Qualifier added and/or value altered during validation
D - Compound identified in an analysis at a secondary dilution
NA - Not analyzed for by laboratory
µg/kg - Micrograms per kilogram
PCBs - Polychlorinated Biphenyls
Bolded results indicate that the compound exceeds the Site-Specific Cleanup Levels
* - Sample designation edited to include "S" to reflect sample is a sediment matrix

Table 2. Summary of Polychlorinated Biphenyl Concentrations in Sewer-Water Samples Collected in The Primary Sewer System Sunnyside Yard, Queens, NY

Parameter (Concentrations in µg/L)	NYCDEP Limitation for Effluent to Combined Sewers	**Sample Designation:** **Sample Date:** **Location:**	MHW-2 2/9/1993	MHW-2 4/26/1994 (4x8)N	MHWF-2 4/26/1994 (4x8)N	MHW-2 7/26/1996	MHWF-2 7/26/1996	MHW-2* 10/12/2010 Pipe From MH-41
Aroclor-1016	--		0.065 U	0.065 UJ	0.065 UJ	1.0 U	1.0 U	0.25 UV
Aroclor-1221	--		0.065 U	0.065 UJ	0.065 UJ	2.0 U	2.0 U	0.25 UV
Aroclor-1232	--		0.065 U	0.065 UJ	0.065 UJ	1.0 U	1.0 U	0.25 UV
Aroclor-1242	--		0.065 U	0.065 UJ	0.065 UJ	1.0 U	1.0 U	0.25 UV
Aroclor-1248	--		0.065 U	0.065 UJ	0.065 UJ	1.0 U	1.0 U	0.25 UV
Aroclor-1254	--		1.1 JV	0.23 J	0.065 UJ	0.084 J	1.0 U	0.25 UV
Aroclor-1260	--		1.2 JV	0.43 J	0.065 UJ	0.14	0.1	0.26
Aroclor-1262	--		NA	NA	NA	NA	NA	0.25 UV
Aroclor-1268	--		NA	NA	NA	NA	NA	0.25 UV
Total PCBs	1		**2.3**	0.66	0	0.224	0.1	0.26

J - Estimated value
U - Indicates that the compound was analyzed for but not detected
V – Qualifier added and/or value altered during validation
D - Compound identified in an analysis at a secondary dilution
NA - Not analyzed for by laboratory
µg/L - Micrograms per liter
NYCDEP - New York City Department of Environmental Protection
PCBs - Polychlorinated Biphenyls
Bolded results indicate that the compound exceeds the NYCDEP Limitation for Effluent to Combined Sewers
* - Sample designation edited to include "W" to indicate sample is a water matrix
F - Filtered sample

Table 2. Summary of Polychlorinated Biphenyl Concentrations in Sewer-Water Samples Collected in The Primary Sewer System Sunnyside Yard, Queens, NY

Parameter (Concentrations in µg/L)	NYCDEP Limitation for Effluent to Combined Sewers	**Sample Designation:** **Sample Date:** **Location:**	MHWF-2* 10/12/2010 Pipe From MH-41	MHW-2* 10/12/2010 Pipe From MH-55	MHWF-2* 10/12/2010 Pipe From MH-55	MHW-2 3/16/2011 Pipe From MH-41
Aroclor-1016	--		0.25 UV	0.25 UV	0.25 UV	0.27 U
Aroclor-1221	--		0.25 UV	0.25 UV	0.25 UV	0.27 U
Aroclor-1232	--		0.25 UV	0.25 UV	0.25 UV	0.27 U
Aroclor-1242	--		0.25 UV	0.25 UV	0.25 UV	0.27 U
Aroclor-1248	--		0.25 UV	0.25 UV	0.25 UV	0.27 U
Aroclor-1254	--		0.25 UV	0.25 UV	0.25 UV	0.27 U
Aroclor-1260	--		0.25 UV	0.22 JV	0.25 UV	0.84
Aroclor-1262	--		0.25 UV	0.25 UV	0.25 UV	0.27 U
Aroclor-1268	--		0.25 UV	0.25 UV	0.25 UV	0.27 U
Total PCBs	1		0	0.22 JV	0	0.84

J - Estimated value
U - Indicates that the compound was analyzed for but not detected
V – Qualifier added and/or value altered during validation
D - Compound identified in an analysis at a secondary dilution
NA - Not analyzed for by laboratory
µg/L - Micrograms per liter
NYCDEP - New York City Department of Environmental Protection
PCBs - Polychlorinated Biphenyls
Bolded results indicate that the compound exceeds the NYCDEP Limitation for Effluent to Combined Sewers
* - Sample designation edited to include "W" to indicate sample is a water matrix
F - Filtered sample

Table 2. Summary of Polychlorinated Biphenyl Concentrations in Sewer-Water Samples Collected in The Primary Sewer System Sunnyside Yard, Queens, NY

Parameter (Concentrations in µg/L)	NYCDEP Limitation for Effluent to Combined Sewers	**Sample Designation:**	MHWF-2	MHW-2	MHWF-2	MHW-2
		Sample Date:	3/16/2011	3/16/2011	3/16/2011	3/17/2011
		Location:	Pipe From MH-41	Pipe From MH-55	Pipe From MH-55	Pipe From MH-41
Aroclor-1016	--		0.28 U	0.26 U	0.27 U	0.26 U
Aroclor-1221	--		0.28 U	0.26 U	0.27 U	0.26 U
Aroclor-1232	--		0.28 U	0.26 U	0.27 U	0.26 U
Aroclor-1242	--		0.28 U	0.26 U	0.27 U	0.26 U
Aroclor-1248	--		0.28 U	0.26 U	0.27 U	0.26 U
Aroclor-1254	--		0.28 U	0.26 U	0.27 U	0.26 U
Aroclor-1260	--		0.28 U	0.72	0.27 U	0.26 U
Aroclor-1262	--		0.28 U	0.26 U	0.27 U	0.26 U
Aroclor-1268	--		0.28 U	0.26 U	0.27 U	0.26 U
Total PCBs	1		0	0.72	0	0

J - Estimated value
U - Indicates that the compound was analyzed for but not detected
V – Qualifier added and/or value altered during validation
D - Compound identified in an analysis at a secondary dilution
NA - Not analyzed for by laboratory
µg/L - Micrograms per liter
NYCDEP - New York City Department of Environmental Protection
PCBs - Polychlorinated Biphenyls
Bolded results indicate that the compound exceeds the NYCDEP Limitation for Effluent to Combined Sewers
* - Sample designation edited to include "W" to indicate sample is a water matrix
F - Filtered sample

Table 2. Summary of Polychlorinated Biphenyl Concentrations in Sewer-Water Samples Collected in The Primary Sewer System Sunnyside Yard, Queens, NY

Parameter (Concentrations in µg/L)	NYCDEP Limitation for Effluent to Combined Sewers	**Sample Designation:** **Sample Date:** **Location:**	MHWF-2 3/17/2011 Pipe From MH-41	MHW-2 3/17/2011 Pipe From MH-55	MHWF-2 3/17/2011 Pipe From MH-55	MHW-3 2/8/1993	MHW-3 7/26/1996
Aroclor-1016	--		0.25 U	0.25 U	0.25 U	0.065 U	1.0 U
Aroclor-1221	--		0.25 U	0.25 U	0.25 U	0.065 U	2.0 U
Aroclor-1232	--		0.25 U	0.25 U	0.25 U	0.065 U	1.0 U
Aroclor-1242	--		0.25 U	0.25 U	0.25 U	0.065 U	1.0 U
Aroclor-1248	--		0.25 U	0.25 U	0.25 U	0.065 U	1.0 U
Aroclor-1254	--		0.25 U	0.25 U	0.25 U	0.32 UV	0.35
Aroclor-1260	--		0.25 U	0.25 U	0.25 U	0.31 UV	0.54
Aroclor-1262	--		0.25 U	0.25 U	0.25 U	NA	NA
Aroclor-1268	--		0.25 U	0.25 U	0.25 U	NA	NA
Total PCBs	1		0	0	0	0	0.89

J - Estimated value
U - Indicates that the compound was analyzed for but not detected
V – Qualifier added and/or value altered during validation
D - Compound identified in an analysis at a secondary dilution
NA - Not analyzed for by laboratory
µg/L - Micrograms per liter
NYCDEP - New York City Department of Environmental Protection
PCBs - Polychlorinated Biphenyls
Bolded results indicate that the compound exceeds the NYCDEP Limitation for Effluent to Combined Sewers
* - Sample designation edited to include "W" to indicate sample is a water matrix
F - Filtered sample

Table 2. Summary of Polychlorinated Biphenyl Concentrations in Sewer-Water Samples Collected in The Primary Sewer System Sunnyside Yard, Queens, NY

Parameter (Concentrations in µg/L)	NYCDEP Limitation for Effluent to Combined Sewers	**Sample Designation:** **Sample Date:** **Location:**	MHWF-3 7/26/1996	MHW-3* 10/11/2010	MHWF-3* 10/11/2010	MHW-3 3/16/2011	MHWF-3 3/16/2011	MHW-3 3/17/2011
Aroclor-1016	--		1.0 U	0.25 UV	0.25 UV	0.28 U	0.27 U	0.26 U
Aroclor-1221	--		2.0 U	0.25 UV	0.25 UV	0.28 U	0.27 U	0.26 U
Aroclor-1232	--		1.0 U	0.25 UV	0.25 UV	0.28 U	0.27 U	0.26 U
Aroclor-1242	--		1.0 U	0.25 UV	0.25 UV	0.28 U	0.27 U	0.26 U
Aroclor-1248	--		1.0 U	0.25 UV	0.25 UV	0.28 U	0.27 U	0.26 U
Aroclor-1254	--		1.0 U	0.25 UV	0.25 UV	0.28 U	0.27 U	0.26 U
Aroclor-1260	--		0.017 J	0.18 JV	0.25 UV	0.28 U	0.27 U	2.8
Aroclor-1262	--		NA	0.25 UV	0.25 UV	0.28 U	0.27 U	0.26 U
Aroclor-1268	--		NA	0.25 UV	0.25 UV	0.28 U	0.27 U	0.26 U
Total PCBs	1		0.017	0.18 JV	0	0	0	**2.8**

J - Estimated value
U - Indicates that the compound was analyzed for but not detected
V – Qualifier added and/or value altered during validation
D - Compound identified in an analysis at a secondary dilution
NA - Not analyzed for by laboratory
µg/L - Micrograms per liter
NYCDEP - New York City Department of Environmental Protection
PCBs - Polychlorinated Biphenyls
Bolded results indicate that the compound exceeds the NYCDEP Limitation for Effluent to Combined Sewers
* - Sample designation edited to include "W" to indicate sample is a water matrix
F - Filtered sample

Table 2. Summary of Polychlorinated Biphenyl Concentrations in Sewer-Water Samples Collected in The Primary Sewer System
Sunnyside Yard, Queens, NY

Parameter (Concentrations in µg/L)	NYCDEP Limitation for Effluent to Combined Sewers	**Sample Designation:** **Sample Date:** **Location:**	MHWF-3 3/17/2011	MHW-5 2/8/1993	MHW-5 7/26/1996	MHW-6 2/8/1993	MHW-6 7/26/1996	MHW-6* 10/11/2010	MHWF-6* 10/11/2010
Aroclor-1016	--		0.25 U	0.065 U	1.0 U	0.067 U	1.0 U	0.25 UDV	0.25 UV
Aroclor-1221	--		0.25 U	0.065 U	2.0 U	0.067 U	2.0 U	0.25 UDV	0.25 UV
Aroclor-1232	--		0.25 U	0.065 U	1.0 U	0.067 U	1.0 U	0.25 UDV	0.25 UV
Aroclor-1242	--		0.25 U	0.065 U	1.0 U	0.067 U	1.0 U	0.25 UDV	0.25 UV
Aroclor-1248	--		0.25 U	0.065 U	1.0 U	0.067 U	1.0 U	0.25 UDV	0.25 UV
Aroclor-1254	--		0.25 U	0.065 U	0.034 J	0.48 UV	1.0 U	0.25 UDV	0.25 UV
Aroclor-1260	--		1.8	0.065 U	0.043 J	0.33 UV	0.015 J	83 D	0.25 UV
Aroclor-1262	--		0.25 U	NA	NA	NA	NA	0.25 UDV	0.25 UV
Aroclor-1268	--		0.25 U	NA	NA	NA	NA	0.25 UDV	0.25 UV
Total PCBs	1		**1.8**	0	0.077	0	0.015	**83**	0

J - Estimated value
U - Indicates that the compound was analyzed for but not detected
V – Qualifier added and/or value altered during validation
D - Compound identified in an analysis at a secondary dilution
NA - Not analyzed for by laboratory
µg/L - Micrograms per liter
NYCDEP - New York City Department of Environmental Protection
PCBs - Polychlorinated Biphenyls
Bolded results indicate that the compound exceeds the NYCDEP Limitation for Effluent to Combined Sewers
* - Sample designation edited to include "W" to indicate sample is a water matrix
F - Filtered sample

Table 2. Summary of Polychlorinated Biphenyl Concentrations in Sewer-Water Samples Collected in The Primary Sewer System Sunnyside Yard, Queens, NY

Parameter (Concentrations in µg/L)	NYCDEP Limitation for Effluent to Combined Sewers	**Sample Designation:** **Sample Date:** **Location:**	MHW-6 3/16/2011	MHWF-6 3/16/2011	MHW-6 3/17/2011	MHWF-6 3/17/2011	MHW-7 2/8/1993	MHW-8 2/9/1993	MHW-8* 10/11/2010
Aroclor-1016	--		0.25 U	0.27 U	0.25 U	0.25 U	0.32 U	0.33 U	0.25 UV
Aroclor-1221	--		0.25 U	0.27 U	0.25 U	0.25 U	0.32 U	0.33 U	0.25 UV
Aroclor-1232	--		0.25 U	0.27 U	0.25 U	0.25 U	0.32 U	0.33 U	0.25 UV
Aroclor-1242	--		0.25 U	0.27 U	0.25 U	0.25 U	0.32 U	0.33 U	0.25 UV
Aroclor-1248	--		0.25 U	0.27 U	0.25 U	0.25 U	2.6	0.33 U	0.25 UV
Aroclor-1254	--		0.25 U	0.27 U	0.25 U	0.25 U	5.9	9.6 JV	0.25 UV
Aroclor-1260	--		12	0.27 U	16 JV	0.25 U	6.3	11 JV	0.25 UV
Aroclor-1262	--		0.25 U	0.27 U	0.25 U	0.25 U	NA	NA	0.25 UV
Aroclor-1268	--		0.25 U	0.27 U	0.25 U	0.25 U	NA	NA	0.25 UV
Total PCBs	1		**12**	0	**16 JV**	0	**14.8**	**20.6 JV**	0

J - Estimated value
U - Indicates that the compound was analyzed for but not detected
V – Qualifier added and/or value altered during validation
D - Compound identified in an analysis at a secondary dilution
NA - Not analyzed for by laboratory
µg/L - Micrograms per liter
NYCDEP - New York City Department of Environmental Protection
PCBs - Polychlorinated Biphenyls
Bolded results indicate that the compound exceeds the NYCDEP Limitation for Effluent to Combined Sewers
* - Sample designation edited to include "W" to indicate sample is a water matrix
F - Filtered sample

Table 2. Summary of Polychlorinated Biphenyl Concentrations in Sewer-Water Samples Collected in The Primary Sewer System Sunnyside Yard, Queens, NY

Parameter (Concentrations in µg/L)	NYCDEP Limitation for Effluent to Combined Sewers	**Sample Designation:** **Sample Date:** **Location:**	MHWF-8* 10/11/2010	MHW-8 3/16/2011	MHWF-8 3/16/2011	MHW-8 3/17/2011	MHWF-8 3/17/2011	MHW-11* 10/11/2010
Aroclor-1016	--		0.25 UV	0.25 U	0.27 U	0.25 U	0.25 U	0.25 UV
Aroclor-1221	--		0.25 UV	0.25 U	0.27 U	0.25 U	0.25 U	0.25 UV
Aroclor-1232	--		0.25 UV	0.25 U	0.27 U	0.25 U	0.25 U	0.25 UV
Aroclor-1242	--		0.25 UV	0.25 U	0.27 U	0.25 U	0.25 U	0.25 UV
Aroclor-1248	--		0.25 UV	0.25 U	0.27 U	0.25 U	0.25 U	0.25 UV
Aroclor-1254	--		0.25 UV	0.25 U	0.27 U	0.25 U	0.25 U	0.25 UV
Aroclor-1260	--		0.25 UV	0.25 U	0.27 U	0.25 U	0.25 U	0.25 UV
Aroclor-1262	--		0.25 UV	0.25 U	0.27 U	0.25 U	0.25 U	0.25 UV
Aroclor-1268	--		0.25 UV	0.25 U	0.27 U	0.25 U	0.25 U	0.25 UV
Total PCBs	1		0	0	0	0	0	0

J - Estimated value
U - Indicates that the compound was analyzed for but not detected
V – Qualifier added and/or value altered during validation
D - Compound identified in an analysis at a secondary dilution
NA - Not analyzed for by laboratory
µg/L - Micrograms per liter
NYCDEP - New York City Department of Environmental Protection
PCBs - Polychlorinated Biphenyls
Bolded results indicate that the compound exceeds the NYCDEP Limitation for Effluent to Combined Sewers
* - Sample designation edited to include "W" to indicate sample is a water matrix
F - Filtered sample

Table 2. Summary of Polychlorinated Biphenyl Concentrations in Sewer-Water Samples Collected in The Primary Sewer System
Sunnyside Yard, Queens, NY

Parameter (Concentrations in µg/L)	NYCDEP Limitation for Effluent to Combined Sewers	**Sample Designation:** **Sample Date:** **Location:**	MHWF-11* 10/11/2010	MHW-11 3/16/2011	MHWF-11 3/16/2011	MHW-11 3/17/2011	MHWF-11 3/17/2011	MHW-29 4/27/1994	MHW-37 7/26/1996
Aroclor-1016	--		0.25 UV	0.27 U	0.27 U	0.25 U	0.25 U	0.50 U	1.0 U
Aroclor-1221	--		0.25 UV	0.27 U	0.27 U	0.25 U	0.25 U	0.50 U	2.0 U
Aroclor-1232	--		0.25 UV	0.27 U	0.27 U	0.25 U	0.25 U	0.50 U	1.0 U
Aroclor-1242	--		0.25 UV	0.27 U	0.27 U	0.25 U	0.25 U	0.50 U	1.0 U
Aroclor-1248	--		0.25 UV	0.27 U	0.27 U	0.25 U	0.25 U	0.50 U	1.0 U
Aroclor-1254	--		0.25 UV	0.27 U	0.27 U	0.25 U	0.25 U	1.0 U	1.0 U
Aroclor-1260	--		0.25 UV	0.98	0.27 U	0.25 U	0.25 U	1.0 U	0.14
Aroclor-1262	--		0.25 UV	0.27 U	0.27 U	0.25 U	0.25 U	NA	NA
Aroclor-1268	--		0.25 UV	0.27 U	0.27 U	0.25 U	0.25 U	NA	NA
Total PCBs	1		0	0.98	0	0	0	0	0.14

J - Estimated value
U - Indicates that the compound was analyzed for but not detected
V – Qualifier added and/or value altered during validation
D - Compound identified in an analysis at a secondary dilution
NA - Not analyzed for by laboratory
µg/L - Micrograms per liter
NYCDEP - New York City Department of Environmental Protection
PCBs - Polychlorinated Biphenyls
Bolded results indicate that the compound exceeds the NYCDEP Limitation for Effluent to Combined Sewers
* - Sample designation edited to include "W" to indicate sample is a water matrix
F - Filtered sample

Table 2. Summary of Polychlorinated Biphenyl Concentrations in Sewer-Water Samples Collected in The Primary Sewer System Sunnyside Yard, Queens, NY

Parameter (Concentrations in µg/L)	NYCDEP Limitation for Effluent to Combined Sewers	**Sample Designation:** **Sample Date:** **Location:**	MHW-38* 10/12/2010	MHWF-38* 10/12/2010	MHW-38 3/16/2011	MHWF-38 3/16/2011	MHW-38 3/17/2011	MHWF-38 3/17/2011
Aroclor-1016	--		0.25 UV	0.25 UV	0.25 U	0.25 U	0.26 U	0.28 U
Aroclor-1221	--		0.25 UV	0.25 UV	0.25 U	0.25 U	0.26 U	0.28 U
Aroclor-1232	--		0.25 UV	0.25 UV	0.25 U	0.25 U	0.26 U	0.28 U
Aroclor-1242	--		0.25 UV	0.25 UV	0.25 U	0.25 U	0.26 U	0.28 U
Aroclor-1248	--		0.25 UV	0.25 UV	0.25 U	0.25 U	0.26 U	0.28 U
Aroclor-1254	--		0.25 UV	0.25 UV	0.25 U	0.25 U	0.26 U	0.28 U
Aroclor-1260	--		0.25 UV	0.25 UV	0.92	0.25 U	0.26 U	0.28 U
Aroclor-1262	--		0.25 UV	0.25 UV	0.25 U	0.25 U	0.26 U	0.28 U
Aroclor-1268	--		0.25 UV	0.25 UV	0.25 U	0.25 U	0.26 U	0.28 U
Total PCBs	1		0	0	0.92	0	0	0

J - Estimated value
U - Indicates that the compound was analyzed for but not detected
V – Qualifier added and/or value altered during validation
D - Compound identified in an analysis at a secondary dilution
NA - Not analyzed for by laboratory
µg/L - Micrograms per liter
NYCDEP - New York City Department of Environmental Protection
PCBs - Polychlorinated Biphenyls
Bolded results indicate that the compound exceeds the NYCDEP Limitation for Effluent to Combined Sewers
* - Sample designation edited to include "W" to indicate sample is a water matrix
F - Filtered sample

Table 2. Summary of Polychlorinated Biphenyl Concentrations in Sewer-Water Samples Collected in The Primary Sewer System
Sunnyside Yard, Queens, NY

Parameter (Concentrations in µg/L)	NYCDEP Limitation for Effluent to Combined Sewers	**Sample Designation:**	MHW-39	MHW-39	MHW-40	MHW-40	MHWF-40	MHW-40	MHWF-40
		Sample Date:	4/26/1994	4/26/1994	4/25/1994	4/25/1994	4/25/1994	7/26/1996	7/26/1996
		Location:		(24)S	(4x8)S	(48)E	(48)E		
Aroclor-1016	--		0.065 UJ	0.065 U	0.065 U	0.065 U	0.065 U	1.0 U	1.0 U
Aroclor-1221	--		0.065 UJ	0.065 U	0.065 U	0.065 U	0.065 U	2.0 U	2.0 U
Aroclor-1232	--		0.065 UJ	0.065 U	0.065 U	0.065 U	0.065 U	1.0 U	1.0 U
Aroclor-1242	--		0.065 UJ	0.065 U	0.065 U	0.065 U	0.065 U	1.0 U	1.0 U
Aroclor-1248	--		0.065 UJ	0.065 U	0.065 U	0.065 U	0.065 U	1.0 U	1.0 U
Aroclor-1254	--		0.065 UJ	0.065 U	0.065 U	0.24 J	0.065 U	0.26	1.0 U
Aroclor-1260	--		0.20 J	0.065 U	0.065 U	0.27 J	0.065 U	0.36	0.015 J
Aroclor-1262	--		NA	NA	NA	NA	NA	NA	NA
Aroclor-1268	--		NA	NA	NA	NA	NA	NA	NA
Total PCBs	1		0.2	0	0	0.51	0	0.62	0.015

J - Estimated value
U - Indicates that the compound was analyzed for but not detected
V – Qualifier added and/or value altered during validation
D - Compound identified in an analysis at a secondary dilution
NA - Not analyzed for by laboratory
µg/L - Micrograms per liter
NYCDEP - New York City Department of Environmental Protection
PCBs - Polychlorinated Biphenyls
Bolded results indicate that the compound exceeds the NYCDEP Limitation for Effluent to Combined Sewers
* - Sample designation edited to include "W" to indicate sample is a water matrix
F - Filtered sample

Table 2. Summary of Polychlorinated Biphenyl Concentrations in Sewer-Water Samples Collected in The Primary Sewer System Sunnyside Yard, Queens, NY

Parameter (Concentrations in µg/L)	NYCDEP Limitation for Effluent to Combined Sewers	**Sample Designation:** **Sample Date:** **Location:**	MHW-40* 10/12/2010	MHWF-40* 10/12/2010	MHW-40 3/16/2011	MHWF-40 3/16/2011	MHW-40 3/17/2011	MHWF-40 3/17/2011
Aroclor-1016	--		0.25 UV	0.25 UV	0.25 U	0.26 U	0.25 U	0.26 U
Aroclor-1221	--		0.25 UV	0.25 UV	0.25 U	0.26 U	0.25 U	0.26 U
Aroclor-1232	--		0.25 UV	0.25 UV	0.25 U	0.26 U	0.25 U	0.26 U
Aroclor-1242	--		0.25 UV	0.25 UV	0.25 U	0.26 U	0.25 U	0.26 U
Aroclor-1248	--		0.25 UV	0.25 UV	0.25 U	0.26 U	0.25 U	0.26 U
Aroclor-1254	--		0.25 UV	0.25 UV	0.25 U	0.26 U	0.25 U	0.26 U
Aroclor-1260	--		2.1	0.25 UV	0.25 U	0.26 U	0.25 U	0.26 U
Aroclor-1262	--		0.25 UV	0.25 UV	0.25 U	0.26 U	0.25 U	0.26 U
Aroclor-1268	--		0.25 UV	0.25 UV	0.25 U	0.26 U	0.25 U	0.26 U
Total PCBs	1		**2.1**	0	0	0	0	0

J - Estimated value
U - Indicates that the compound was analyzed for but not detected
V – Qualifier added and/or value altered during validation
D - Compound identified in an analysis at a secondary dilution
NA - Not analyzed for by laboratory
µg/L - Micrograms per liter
NYCDEP - New York City Department of Environmental Protection
PCBs - Polychlorinated Biphenyls
Bolded results indicate that the compound exceeds the NYCDEP Limitation for Effluent to Combined Sewers
* - Sample designation edited to include "W" to indicate sample is a water matrix
F - Filtered sample

Table 2. Summary of Polychlorinated Biphenyl Concentrations in Sewer-Water Samples Collected in The Primary Sewer System Sunnyside Yard, Queens, NY

Parameter (Concentrations in µg/L)	NYCDEP Limitation for Effluent to Combined Sewers	**Sample Designation:** **Sample Date:** **Location:**	MHW-42 7/26/1996	MHW-42* 10/12/2010	MHWF-42* 10/12/2010	MHW-42 3/16/2011	MHWF-42 3/16/2011	MHW-42 3/17/2011
Aroclor-1016	--		1.0 U	0.25 UV	0.25 UV	0.25 U	0.25 U	0.25 U
Aroclor-1221	--		2.0 U	0.25 UV	0.25 UV	0.25 U	0.25 U	0.25 U
Aroclor-1232	--		1.0 U	0.25 UV	0.25 UV	0.25 U	0.25 U	0.25 U
Aroclor-1242	--		1.0 U	0.25 UV	0.25 UV	0.25 U	0.25 U	0.25 U
Aroclor-1248	--		1.0 U	0.25 UV	0.25 UV	0.25 U	0.25 U	0.25 U
Aroclor-1254	--		0.18	0.25 UV	0.25 UV	0.25 U	0.25 U	0.25 U
Aroclor-1260	--		0.73	0.24 JV	0.25 UV	1	0.25 U	0.25 U
Aroclor-1262	--		NA	0.25 UV	0.25 UV	0.25 U	0.25 U	0.25 U
Aroclor-1268	--		NA	0.25 UV	0.25 UV	0.25 U	0.25 U	0.25 U
Total PCBs	1		0.91	0.24 JV	0	1	0	0

J - Estimated value
U - Indicates that the compound was analyzed for but not detected
V – Qualifier added and/or value altered during validation
D - Compound identified in an analysis at a secondary dilution
NA - Not analyzed for by laboratory
µg/L - Micrograms per liter
NYCDEP - New York City Department of Environmental Protection
PCBs - Polychlorinated Biphenyls
Bolded results indicate that the compound exceeds the NYCDEP Limitation for Effluent to Combined Sewers
* - Sample designation edited to include "W" to indicate sample is a water matrix
F - Filtered sample

Table 2. Summary of Polychlorinated Biphenyl Concentrations in Sewer-Water Samples Collected in The Primary Sewer System Sunnyside Yard, Queens, NY

Parameter (Concentrations in µg/L)	NYCDEP Limitation for Effluent to Combined Sewers	**Sample Designation:** **Sample Date:** **Location:**	MHWF-42 3/17/2011	MHW-43 4/27/1994	MHW-45* 10/11/2010	MHWF-45* 10/11/2010	MHW-45 3/16/2011	MHWF-45 3/16/2011
Aroclor-1016	--		0.28 U	0.065 UJ	0.25 UV	0.25 UV	0.25 U	0.25 U
Aroclor-1221	--		0.28 U	0.065 UJ	0.25 UV	0.25 UV	0.25 U	0.25 U
Aroclor-1232	--		0.28 U	0.065 UJ	0.25 UV	0.25 UV	0.25 U	0.25 U
Aroclor-1242	--		0.28 U	0.065 UJ	0.25 UV	0.25 UV	0.25 U	0.25 U
Aroclor-1248	--		0.28 U	0.065 UJ	0.25 UV	0.25 UV	0.25 U	0.25 U
Aroclor-1254	--		0.28 U	0.065 UJ	0.25 UV	0.25 UV	0.25 U	0.25 U
Aroclor-1260	--		0.28 U	0.065 UJ	0.23 JV	0.25 UV	0.3	0.25 U
Aroclor-1262	--		0.28 U	NA	0.25 UV	0.25 UV	0.25 U	0.25 U
Aroclor-1268	--		0.28 U	NA	0.25 UV	0.25 UV	0.25 U	0.25 U
Total PCBs	1		0	0	0.23 JV	0	0.3	0

J - Estimated value
U - Indicates that the compound was analyzed for but not detected
V – Qualifier added and/or value altered during validation
D - Compound identified in an analysis at a secondary dilution
NA - Not analyzed for by laboratory
µg/L - Micrograms per liter
NYCDEP - New York City Department of Environmental Protection
PCBs - Polychlorinated Biphenyls
Bolded results indicate that the compound exceeds the NYCDEP Limitation for Effluent to Combined Sewers
* - Sample designation edited to include "W" to indicate sample is a water matrix
F - Filtered sample

Table 2. Summary of Polychlorinated Biphenyl Concentrations in Sewer-Water Samples Collected in The Primary Sewer System Sunnyside Yard, Queens, NY

Parameter (Concentrations in µg/L)	NYCDEP Limitation for Effluent to Combined Sewers	**Sample Designation:** **Sample Date:** **Location:**	MHW-45 3/17/2011	MHWF-45 3/17/2011	MHW-51* 10/12/2010	MHWF-51* 10/12/2010	MHW-51 3/16/2011	MHWF-51 3/16/2011
Aroclor-1016	--		0.26 U	0.25 U	0.25 UV	0.25 UV	0.25 U	0.25 U
Aroclor-1221	--		0.26 U	0.25 U	0.25 UV	0.25 UV	0.25 U	0.25 U
Aroclor-1232	--		0.26 U	0.25 U	0.25 UV	0.25 UV	0.25 U	0.25 U
Aroclor-1242	--		0.26 U	0.25 U	0.25 UV	0.25 UV	0.25 U	0.25 U
Aroclor-1248	--		0.26 U	0.25 U	0.25 UV	0.25 UV	0.25 U	0.25 U
Aroclor-1254	--		0.26 U	0.25 U	0.25 UV	0.25 UV	0.25 U	0.25 U
Aroclor-1260	--		0.26 U	0.25 U	0.25 UV	0.25 UV	0.25 U	0.25 U
Aroclor-1262	--		0.26 U	0.25 U	0.25 UV	0.25 UV	0.25 U	0.25 U
Aroclor-1268	--		0.26 U	0.25 U	0.25 UV	0.25 UV	0.25 U	0.25 U
Total PCBs	1		0	0	0	0	0	0

J - Estimated value
U - Indicates that the compound was analyzed for but not detected
V – Qualifier added and/or value altered during validation
D - Compound identified in an analysis at a secondary dilution
NA - Not analyzed for by laboratory
µg/L - Micrograms per liter
NYCDEP - New York City Department of Environmental Protection
PCBs - Polychlorinated Biphenyls
Bolded results indicate that the compound exceeds the NYCDEP Limitation for Effluent to Combined Sewers
* - Sample designation edited to include "W" to indicate sample is a water matrix
F - Filtered sample

Table 2. Summary of Polychlorinated Biphenyl Concentrations in Sewer-Water Samples Collected in The Primary Sewer System Sunnyside Yard, Queens, NY

Parameter (Concentrations in µg/L)	NYCDEP Limitation for Effluent to Combined Sewers	**Sample Designation:** **Sample Date:** **Location:**	MHW-51 3/17/2011	MHWF-51 3/17/2011	MHW-52* 10/12/2010	MHW-52 4/26/1994 (10)N	MHW-52 4/26/1994 (18)SE	MHW-52 4/26/1994 (42)SW
Aroclor-1016	--		0.25 U	0.25 U	0.25 UV	0.065 U	0.065 U	0.065 U
Aroclor-1221	--		0.25 U	0.25 U	0.25 UV	0.065 U	0.065 U	0.065 U
Aroclor-1232	--		0.25 U	0.25 U	0.25 UV	0.065 U	0.065 U	0.065 U
Aroclor-1242	--		0.25 U	0.25 U	0.25 UV	0.065 U	0.065 U	0.065 U
Aroclor-1248	--		0.25 U	0.25 U	0.25 UV	0.065 U	0.065 U	0.065 U
Aroclor-1254	--		0.25 U	0.25 U	0.25 UV	0.065 U	0.065 U	0.065 U
Aroclor-1260	--		0.25 U	0.25 U	0.14 JV	0.065 U	0.065 U	0.065 U
Aroclor-1262	--		0.25 U	0.25 U	0.25 UV	NA	NA	NA
Aroclor-1268	--		0.25 U	0.25 U	0.25 UV	NA	NA	NA
Total PCBs	1		0	0	0.14 JV	0	0	0

J - Estimated value
U - Indicates that the compound was analyzed for but not detected
V – Qualifier added and/or value altered during validation
D - Compound identified in an analysis at a secondary dilution
NA - Not analyzed for by laboratory
µg/L - Micrograms per liter
NYCDEP - New York City Department of Environmental Protection
PCBs - Polychlorinated Biphenyls
Bolded results indicate that the compound exceeds the NYCDEP Limitation for Effluent to Combined Sewers
* - Sample designation edited to include "W" to indicate sample is a water matrix
F - Filtered sample

Table 2. Summary of Polychlorinated Biphenyl Concentrations in Sewer-Water Samples Collected in The Primary Sewer System Sunnyside Yard, Queens, NY

Parameter (Concentrations in µg/L)	NYCDEP Limitation for Effluent to Combined Sewers	**Sample Designation:** **Sample Date:** **Location:**	MHWF-52 4/26/1994 (42)SW	MHW-52 7/26/1996	MHWF-52* 10/12/2010	MHW-52 3/16/2011	MHWF-52 3/16/2011	MHW-52 3/17/2011
Aroclor-1016	--		0.065 UJ	1.0 U	0.25 UV	0.25 U	0.25 U	0.26 U
Aroclor-1221	--		0.065 UJ	2.0 U	0.25 UV	0.25 U	0.25 U	0.26 U
Aroclor-1232	--		0.065 UJ	1.0 U	0.25 UV	0.25 U	0.25 U	0.26 U
Aroclor-1242	--		0.065 UJ	1.0 U	0.25 UV	0.25 U	0.25 U	0.26 U
Aroclor-1248	--		0.065 UJ	1.0 U	0.25 UV	0.25 U	0.25 U	0.26 U
Aroclor-1254	--		0.065 UJ	1.0 U	0.25 UV	0.25 U	0.25 U	0.26 U
Aroclor-1260	--		0.065 UJ	0.29	0.25 UV	0.59	0.25 U	0.26 U
Aroclor-1262	--		NA	NA	0.25 UV	0.25 U	0.25 U	0.26 U
Aroclor-1268	--		NA	NA	0.25 UV	0.25 U	0.25 U	0.26 U
Total PCBs	1		0	0.29	0	0.59	0	0

J - Estimated value
U - Indicates that the compound was analyzed for but not detected
V – Qualifier added and/or value altered during validation
D - Compound identified in an analysis at a secondary dilution
NA - Not analyzed for by laboratory
µg/L - Micrograms per liter
NYCDEP - New York City Department of Environmental Protection
PCBs - Polychlorinated Biphenyls
Bolded results indicate that the compound exceeds the NYCDEP Limitation for Effluent to Combined Sewers
* - Sample designation edited to include "W" to indicate sample is a water matrix
F - Filtered sample

Table 2. Summary of Polychlorinated Biphenyl Concentrations in Sewer-Water Samples Collected in The Primary Sewer System Sunnyside Yard, Queens, NY

Parameter (Concentrations in µg/L)	NYCDEP Limitation for Effluent to Combined Sewers	**Sample Designation:** **Sample Date:** **Location:**	MHWF-52 3/17/2011	MHW-69 4/28/1994	MHW-69* 10/12/2010	MHWF-69* 10/12/2010	MHW-69 3/16/2011	MHWF-69 3/16/2011
Aroclor-1016	--		0.26 U	0.050 U	0.25 UV	0.25 UV	0.25 U	0.25 U
Aroclor-1221	--		0.26 U	0.050 U	0.25 UV	0.25 UV	0.25 U	0.25 U
Aroclor-1232	--		0.26 U	0.050 U	0.25 UV	0.25 UV	0.25 U	0.25 U
Aroclor-1242	--		0.26 U	0.050 U	0.25 UV	0.25 UV	0.25 U	0.25 U
Aroclor-1248	--		0.26 U	0.050 U	0.25 UV	0.25 UV	0.25 U	0.25 U
Aroclor-1254	--		0.26 U	1.0 U	0.25 UV	0.25 UV	0.25 U	0.25 U
Aroclor-1260	--		0.26 U	4.4	0.25 UV	0.25 UV	0.25 U	0.25 U
Aroclor-1262	--		0.26 U	NA	0.25 UV	0.25 UV	0.25 U	0.25 U
Aroclor-1268	--		0.26 U	NA	0.25 UV	0.25 UV	0.25 U	0.25 U
Total PCBs	1		0	4.4	0	0	0	0

J - Estimated value
U - Indicates that the compound was analyzed for but not detected
V – Qualifier added and/or value altered during validation
D - Compound identified in an analysis at a secondary dilution
NA - Not analyzed for by laboratory
µg/L - Micrograms per liter
NYCDEP - New York City Department of Environmental Protection
PCBs - Polychlorinated Biphenyls
Bolded results indicate that the compound exceeds the NYCDEP Limitation for Effluent to Combined Sewers
* - Sample designation edited to include "W" to indicate sample is a water matrix
F - Filtered sample

Table 2. Summary of Polychlorinated Biphenyl Concentrations in Sewer-Water Samples Collected in The Primary Sewer System Sunnyside Yard, Queens, NY

Parameter (Concentrations in µg/L)	NYCDEP Limitation for Effluent to Combined Sewers	**Sample Designation:** **Sample Date:** **Location:**	MHW-69 3/17/2011	MHWF-69 3/17/2011
Aroclor-1016	--		0.26 U	0.16 U
Aroclor-1221	--		0.26 U	0.16 U
Aroclor-1232	--		0.26 U	0.16 U
Aroclor-1242	--		0.26 U	0.16 U
Aroclor-1248	--		0.26 U	0.16 U
Aroclor-1254	--		0.26 U	0.16 U
Aroclor-1260	--		0.26 U	0.16 U
Aroclor-1262	--		0.26 U	0.16 U
Aroclor-1268	--		0.26 U	0.16 U
Total PCBs	1		0	0

J - Estimated value
U - Indicates that the compound was analyzed for but not detected
V – Qualifier added and/or value altered during validation
D - Compound identified in an analysis at a secondary dilution
NA - Not analyzed for by laboratory
µg/L - Micrograms per liter
NYCDEP - New York City Department of Environmental Protection
PCBs - Polychlorinated Biphenyls
Bolded results indicate that the compound exceeds the NYCDEP Limitation for Effluent to Combined Sewers
* - Sample designation edited to include "W" to indicate sample is a water matrix
F - Filtered sample

FIGURES

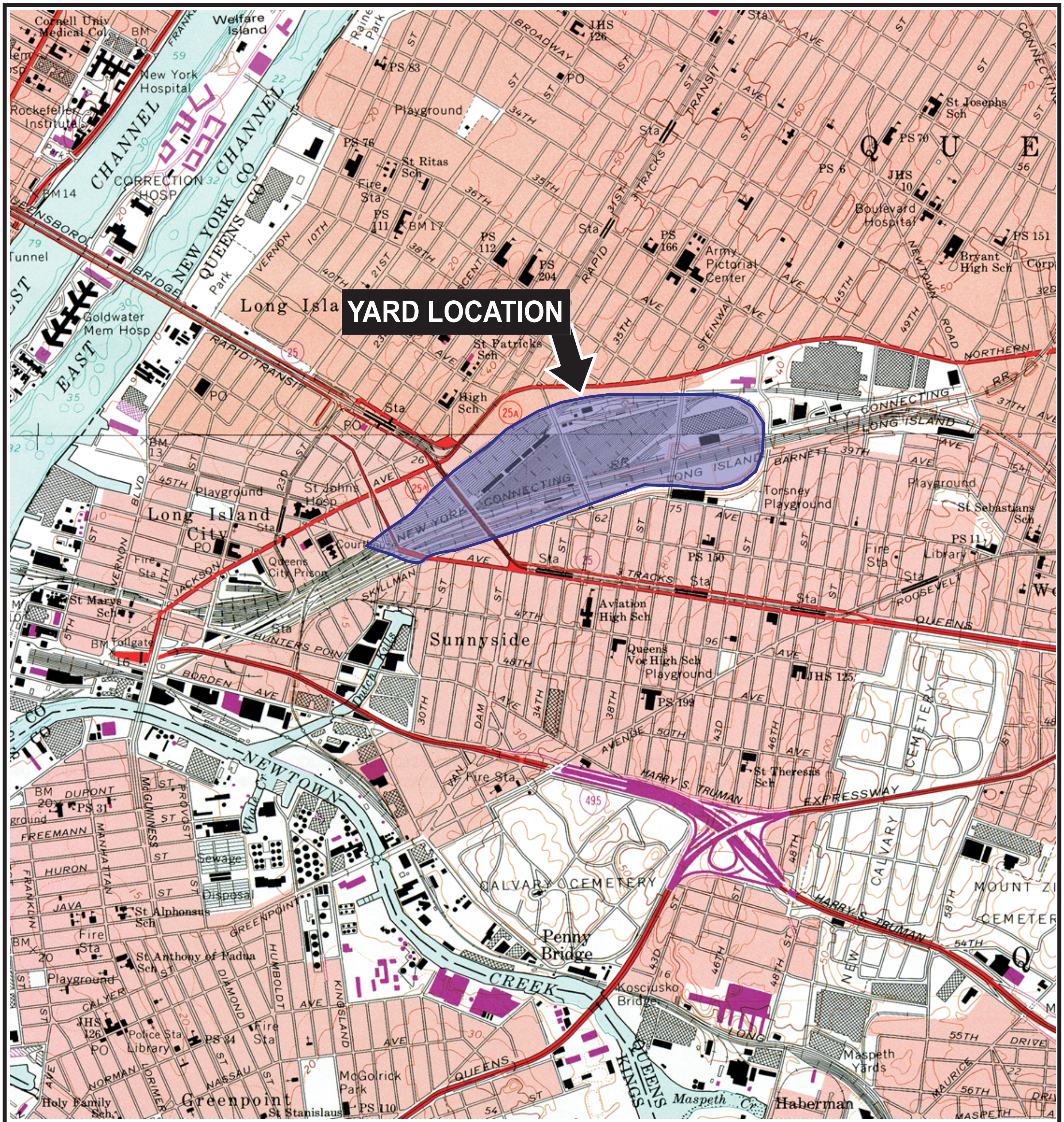

SOURCE:
CENTRAL PARK AND BROOKLYN, NEW YORK
QUADRANGLE 7.5 MINUTE SERIES (TOPOGRAPHIC)

QUADRANGLE LOCATION

N

0 2000'

Title:

LOCATION OF SITE

OPERABLE UNIT 5 REMEDIAL INVESTIGATION REPORT
SUNNYSIDE YARD, QUEENS, NEW YORK

Prepared for:

AMTRAK

ROUX
ROUX ASSOCIATES, INC.
Environmental Consulting & Management

Compiled by: H.G.	Date: 16MAY11	FIGURE
Prepared by: J.A.D.	Scale: AS SHOWN	1
Project Mgr.: H.G.	Project No.: 0055.0050Y005	
File: 0055.0050Y122.01.CDR		

V:\CAD\PROJECTS\0055Y\0050Y122\0055.0050Y122.01.CDR

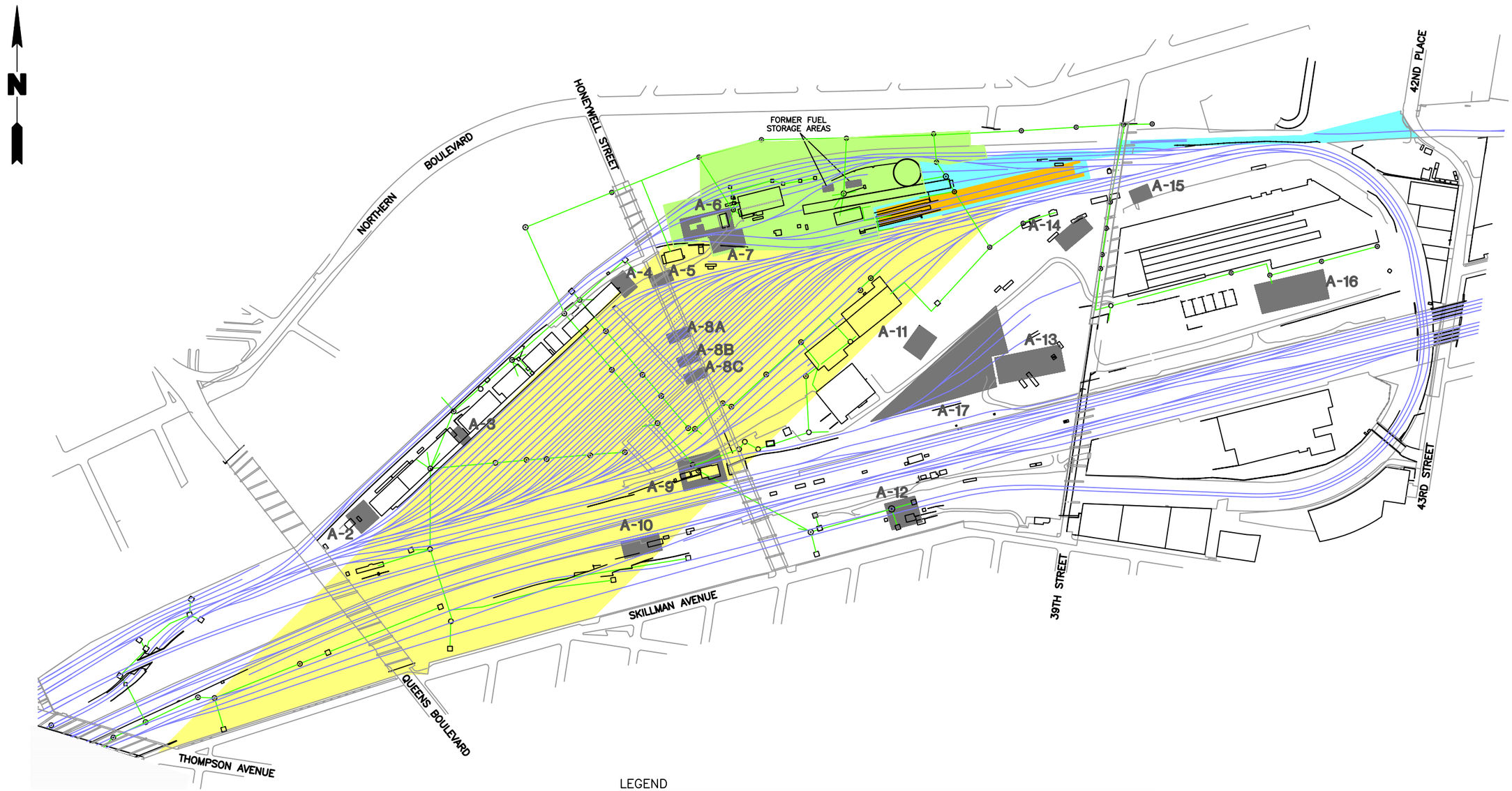

NOTES

1. LOCATIONS OF SEWER COMPONENTS BASED UPON A REVIEW OF AMTRAK–SUPPLIED ENGINEERING DIAGRAMS AND LIMITED FIELD SURVEY.
2. OU–6, GROUNDWATER BENEATH THE YARD (UNDERLIES ALL OTHER OU's)
3. RI – REMEDIAL INVESTIGATION
4. LIRR – LONG ISLAND RAIL ROAD

LEGEND

- LOCATION OF RAILROAD TRACK
- APPROXIMATE LOCATION OF SEWER
- GRATE COVER CATCH BASIN LOCATION
- SOLID COVER MANHOLE LOCATION
- GRATE COVER MANHOLE LOCATION
- A-2 LOCATION AND DESIGNATION OF PREVIOUSLY DETERMINED AREA OF CONCERN
- APPROXIMATE PROPERTY BOUNDARY

- OU–1
- OU–2
- OU–3
- OU–4
- OU–5

OU–6, GROUNDWATER BENEATH THE YARD (UNDERLIES ALL OTHER OU's)

400' 0 400'

Title:

AMTRAK YARD LAYOUT

OPERABLE UNIT 5 REMEDIAL INVESTIGATION REPORT
SUNNYSIDE YARD, QUEENS, NEW YORK

Prepared For:

AMTRAK

ROUX
ROUX ASSOCIATES, INC.
Environmental Consulting and Management

Compiled by: H.G.	Date: 16MAY11	FIGURE
Prepared by: J.A.D.	Scale: AS SHOWN	2
Project Mgr: H.G.	Project: 0055.0050Y005	
File: 0055.0050Y122.02.DWG		

V:\CAD\PROJECTS\0055Y\0050Y\122\0055.0050Y122.02.DWG

APPENDIX

APPENDIX A

Data Usability Summary Reports for OU-5

Data Validation Services

120 Cobble Creek Road P.O. Box 208
North Creek, NY 12853

Phone 518-251-4429
Facsimile 518-251-4428

March 11, 2011

Richard Maxwell
Roux Associates
209 Shafter St.
Islandia, NY 11749

RE: **D**ata **U**sability **S**ummary **R**eport for the Amtrak OU-5 site
Hampton Clarke-Veritech SDG Nos. AC54993 and AC54994

Dear Mr. Maxwell:

Review has been completed for the data packages generated by Hampton Clarke-Veritech (HC-V) that pertain to samples collected between 10/11/10 and 10/12/10 at the Amtrak OU-5 site. The total and filtered fractions of thirteen aqueous samples and an aqueous field duplicate, and eleven sediment samples and one soil field duplicate were analyzed for Aroclor PCBs. The analytical method utilized is that of the USEPA SW846 method 8082.

The data packages submitted contain full deliverables for validation, but this usability report is generated from review of the summary form information, with review of sample raw data, and limited review of associated QC raw data. Full validation has not been performed. However, the reported summary forms have been reviewed for application of validation qualifiers, using guidance from the USEPA Region 2 validation SOPs, the USEPA National Functional Guidelines for Data Review, the specific laboratory methodologies, and professional judgment, as affects the usability of the data. The following items were reviewed:

* Laboratory Narrative Discussion
* Custody Documentation
* Holding Times
* Surrogate Standard Recoveries
* Matrix Spike Recoveries/Duplicate Correlations
* Field Duplicate Correlations
* Preparation Blanks
* Laboratory Control Samples
* Instrument Performance
* Sample Result Verification

Those items listed above which show deficiencies are discussed within the text of this narrative. All of the other items were determined to be acceptable for the DUSR level of review.

In summary, sample analyses were generally conducted in compliance with the required analytical protocols. Sample data are usable, with qualification of some of the sample results as quantitatively estimated. The sediment matrix exhibits possible non-homogeneity.

Copies of the laboratory case narratives are attached to this text, and should be reviewed in conjunction with this report. Also included with the report are client results tables annotated to reflect the data qualifications recommended within this report. The table for the aqueous samples has been edited to replace the Method Detection Limit (MDL) reporting limits that were utilized by the laboratory with reporting limits consistent with the analytical processing.

The following text discusses quality issues of concern.

Data Package Completeness

No summary for dual column quantitative correlation was provided by HC-V. This parameter was reviewed from the raw data during the validation process.

Some of the sediment raw data chromatograms were not scaled properly, maximizing a sulfur interferent. This prohibits independent confirmation of some of the non-detected reported results. Full validation would require resubmitted chromatograms.

Most of the detected responses for Aroclor congeners and surrogate standards required manual intervention. This should have been clarified in the laboratory data package, including manual area integration plots.

Field Duplicates

Blind field duplicate evaluations were performed for the total and filtered fractions of the aqueous samples and the sediments at locations MH-40 and MH-45. Correlations for the aqueous samples are within validation guidelines. However, the detected values for the sediments do not correlate well. The following results for which are qualified as estimated in the indicated parent sample and its duplicate:

- Aroclor 1260 in MW-40 (>±2XCRDL)
- Aroclors 1248 and 1260 in MW-45 (>±2XCRDL and 135%RPD, respectively)

PCB Analyses by EPA 8082

The matrix spikes of Aroclor 1016 in the sediment at location MH-45 show acceptable accuracy and precision. However, the detected values for Aroclor 1260 in the spikes of that sample show inconsistencies that are typical of a non-homogeneous matrix. This is supported by the variance observed in the field duplicate results (noted above).

The matrix spikes for Aroclors 1016 and 1260 in the aqueous filtered and unfiltered fractions of location MH-45 show accuracy and precision within laboratory acceptance ranges. Spiked blanks also show compliant recoveries.

Holding times meet validation protocol guidelines. Surrogate standard recoveries are within recommended acceptance ranges, and blanks show no contamination.

Instrument performance was compliant. The dual column quantitative correlations for the sample detections are acceptable.

Please do not hesitate to contact me if you have comments or questions regarding this report.

Very truly yours,

Judy Harry

Judy Harry

VALIDATION DATA QUALIFIER DEFINITIONS

U	The analyte was analyzed for, but was not detected above the level of the associated reported quantitation limit.
J	The analyte was positively identified; the associated numerical value is an approximate concentration of the analyte in the sample.
UJ	The analyte was not detected. The associated reported quantitation limit is an estimate and may be inaccurate or imprecise.
NJ	The detection is tentative in identification and estimated in value. Although there is presumptive evidence of the analyte, the result should be used with caution as a potential false positive and/or elevated quantitative value.
R	The data are unusable. The analyte may or may not be present.
EMPC	The results do not meet all criteria for a confirmed identification. The quantitative value represents the Estimated Maximum Possible Concentration of the analyte in the sample.

CLIENT and LABORATORY SAMPLE IDs and CASE NARRATIVES

HCV Case Narrative/Conformance Summary

Client: Roux Associates
Project: Amtrak-Sunnyside (OU-5)

HCV Project: 0101319

Hampton-Clarke/Veritech (HCV) received the following samples on October 13, 2010:

Client ID	HCV Sample ID	Matrix	Analysis
MH-42 IN FILTERED	AC54993-001	Aqueous	PCB (8082)
MH-42 IN UNFILTERED	AC54993-002	Aqueous	PCB (8082)
MH-42 SEDIMENT	AC54993-003	Sediment	PCB (8082)
MH-51 IN FILTERED	AC54993-004	Aqueous	PCB (8082)
MH-51 IN UNFILTERED	AC54993-005	Aqueous	PCB (8082)
MH-38 IN UNFILTERED	AC54993-006	Aqueous	PCB (8082)
MH-38 IN FILTERED	AC54993-007	Aqueous	PCB (8082)
MH-38 SEDIMENT	AC54993-008	Sediment	PCB (8082)
MH-52 IN UNFILTERED	AC54993-009	Aqueous	PCB (8082)
MH-52 IN FILTERED	AC54993-010	Aqueous	PCB (8082)
MH-52 SEDIMENT	AC54993-011	Sediment	PCB (8082)
MH-69 IN FILTERED	AC54993-012	Aqueous	PCB (8082)
MH-69 IN UNFILTERED	AC54993-013	Aqueous	PCB (8082)
MH-69 SEDIMENT	AC54993-014	Sediment	PCB (8082)
MH-2 IN 41 FILTERED	AC54993-015	Aqueous	PCB (8082)
MH-2 IN 41 UNFILTERED	AC54993-016	Aqueous	PCB (8082)
MH-2 IN 55 FILTERED	AC54993-017	Aqueous	PCB (8082)
MH-2 IN 55 UNFILTERED	AC54993-018	Aqueous	PCB (8082)
MH-2 IN 41 SEDIMENT	AC54993-019	Sediment	PCB (8082)
MH-2 IN 55 SEDIMENT	AC54993-020	Sediment	PCB (8082)
FB-101210	AC54993-021	Aqueous	PCB (8082)
MH-40 IN FILTERED	AC54993-022	Aqueous	PCB (8082)
MH-40 IN UNFILTERED	AC54993-023	Aqueous	PCB (8082)
MH-40 SEDIMENT	AC54993-024	Sediment	PCB (8082)
DUP-101210 FILTERED	AC54993-025	Aqueous	PCB (8082)
DUP-101210 UN FILTERED	AC54993-026	Aqueous	PCB (8082)
DUP-101210 SEDIMENT	AC54993-027	Sediment	PCB (8082)

PCB Analysis:

The recovery of Aroclor-1260 is outside QC limits in the Matrix Spike and Matrix Spike Duplicate in batch SMB1939. All QC criteria were met in the Laboratory Control Sample (MBS).

I certify that this data package is in compliance with the terms and conditions of the contract, both technically and for completeness, for other than the conditions detailed above. Release of the data contained in this hardcopy data package and in the computer-readable data has been authorized by the Laboratory Manager or his designee, as verified by the following signature.

Jeri Rossi
Jeri Rossi
Quality Assurance Director

Or

Stanley Gilewicz
Laboratory Director

11/12/10
Date

HCV Case Narrative/Conformance Summary

Client: Roux Associates
Project: Amtrak-Sunnyside (OU-5)

HCV Project: 0101320

Hampton-Clarke/Veritech (HC·V) received the following samples on October 13, 2010:

Client ID	HCV Sample ID	Matrix	Analysis
MH-3 in Filtered	AC54994-001	Aqueous	PCB (8082)
MH-3 in unFiltered	AC54994-002	Aqueous	PCB (8082)
MH-3 Sediment	AC54994-003	Sediment	PCB (8082)
MH-45 MS Filtered	AC54994-004	Aqueous	PCB (8082)
MH-45 MS unFiltered	AC54994-005	Aqueous	PCB (8082)
DUP-101110 Filtered	AC54994-006	Aqueous	PCB (8082)
DUP-101110 unFiltered	AC54994-007	Aqueous	PCB (8082)
DUP-101110 Sediment	AC54994-008	Sediment	PCB (8082)
MH-45 MSD Filtered	AC54994-009	Aqueous	PCB (8082)
MH-45 MSD unFiltered	AC54994-010	Aqueous	PCB (8082)
MH-11 in Filtered	AC54994-011	Aqueous	PCB (8082)
MH-11 in unFiltered	AC54994-012	Aqueous	PCB (8082)
MH-11 in Sediment	AC54994-013	Sediment	PCB (8082)
MH-6in Filtered	AC54994-014	Aqueous	PCB (8082)
MH-6in unFiltered	AC54994-015	Aqueous	PCB (8082)
MH-6 Sediment	AC54994-016	Sediment	PCB (8082)
MH-8 in Filtered	AC54994-017	Aqueous	PCB (8082)
MH-8 in unFiltered	AC54994-018	Aqueous	PCB (8082)
MH-45 in unFiltered	AC54994-019	Aqueous	PCB (8082)
MH-45 in Filtered	AC54994-020	Aqueous	PCB (8082)
MH-45 Sediment	AC54994-021	Sediment	PCB (8082)
MH-45MS Sediment	AC54994-022	Sediment	PCB (8082)
MH-45MSD Sediment	AC54994-023	Sediment	PCB (8082)
FB-101110	AC54994-024	Aqueous	PCB (8082)

PCB Analysis:

The recovery of Aroclor-1260 is outside QC limits in the Matrix Spike and Matrix Spike Duplicate in batch SMB1939. All QC criteria were met in the Laboratory Control Sample (MBS).

There is no surrogate recovery data for sample AC54994-016 due to high sample dilution.

I certify that this data package is in compliance with the terms and conditions of the contract, both technically and for completeness, for other than the conditions detailed above. Release of the data contained in this hardcopy data package and in the computer-readable data has been authorized by the Laboratory Manager or his designee, as verified by the following signature.

Jeri Rossi
Jeri Rossi
Quality Assurance Director

Or

Stanley Gilewicz
Laboratory Director

11/17/10
Date

QUALIFIED CLIENT RESULTS TABLES

Table 2. Summary of Polychlorinated Biphenyl Concentrations in Sewer-Water Samples Collected in The Primary Sewer System Sunnyside Yard, Queens, New York

Parameter (Concentrations in µg/L)	Sample Designation:	DUP-101110 Filtered	DUP-101110	DUP-101210 Filtered	DUP-101210	MH-2
	Sample Date:	10/11/2010	10/11/2010	10/12/2010	10/12/2010	10/12/2010
	Location:	-	-	-	-	41 in. pipe diam.
Aroclor-1016		0.25 U	0.25 U	0.25 U	0.25 U	0.25 U
Aroclor-1221		0.25 U	0.25 U	0.25 U	0.25 U	0.25 U
Aroclor-1232		0.25 U	0.25 U	0.25 U	0.25 U	0.25 U
Aroclor-1242		0.25 U	0.25 U	0.25 U	0.25 U	0.25 U
Aroclor-1248		0.25 U	0.25 U	0.25 U	0.25 U	0.25 U
Aroclor-1254		0.25 U	0.25 U	0.25 U	0.25 U	0.25 U
Aroclor-1260		0.25 U	0.25 U	0.25 U	2.2	0.26
Aroclor-1262		0.25 U	0.25 U	0.25 U	0.25 U	0.25 U
Aroclor-1268		0.25 U	0.25 U	0.25 U	0.25 U	0.25 U
Total PCBs		0	0	0	2.2	0.26

J - Estimated value
U - Indicates that the compound was analyzed for but not detected
V – Qualifier added and/or value altered during validation
P – Aroclor concentrations between two GC columns differed by greater than 25 percent
µg/L - Micrograms per liter
ft bls - Feet below land surface
PCBs - Polychlorinated Biphenyls

Table 2. Summary of Polychlorinated Biphenyl Concentrations in Sewer-Water Samples Collected in The Primary Sewer System Sunnyside Yard, Queens, New York

Parameter (Concentrations in µg/L)	Sample Designation:	MH-2 Filtered	MH-2	MH-2 Filtered	MH-3	MH-3 Filtered
	Sample Date:	10/12/2010	10/12/2010	10/12/2010	10/11/2010	10/11/2010
	Location:	41 in. pipe diam.	55 in. pipe diam.	55 in. pipe diam.	-	-
Aroclor-1016		0.25 U	0.25 U	0.25 U	0.25 U	0.25 U
Aroclor-1221		0.25 U	0.25 U	0.25 U	0.25 U	0.25 U
Aroclor-1232		0.25 U	0.25 U	0.25 U	0.25 U	0.25 U
Aroclor-1242		0.25 U	0.25 U	0.25 U	0.25 U	0.25 U
Aroclor-1248		0.25 U	0.25 U	0.25 U	0.25 U	0.25 U
Aroclor-1254		0.25 U	0.25 U	0.25 U	0.25 U	0.25 U
Aroclor-1260		0.25 U	0.22 J	0.25 U	0.18 J	0.25 U
Aroclor-1262		0.25 U	0.25 U	0.25 U	0.25 U	0.25 U
Aroclor-1268		0.25 U	0.25 U	0.25 U	0.25 U	0.25 U
Total PCBs		0	0.22 J	0	0.18 J	0

J - Estimated value
U - Indicates that the compound was analyzed for but not detected
V – Qualifier added and/or value altered during validation
P – Aroclor concentrations between two GC columns differed by greater than 25 percent
µg/L - Micrograms per liter
ft bls - Feet below land surface
PCBs - Polychlorinated Biphenyls

Table 2. Summary of Polychlorinated Biphenyl Concentrations in Sewer-Water Samples Collected in The Primary Sewer System Sunnyside Yard, Queens, New York

Parameter (Concentrations in µg/L)	Sample Designation:	MH-6	MH-6 Filtered	MH-8	MH-8 Filtered	MH-11	MH-11 Filtered
	Sample Date:	10/11/2010	10/11/2010	10/11/2010	10/11/2010	10/11/2010	10/11/2010
	Location:	-	-	-	-	-	-
Aroclor-1016		2.5 UD	0.25 U	0.25 U	0.25 U	0.25 U	0.25 U
Aroclor-1221		2.5 UD	0.25 U	0.25 U	0.25 U	0.25 U	0.25 U
Aroclor-1232		2.5 UD	0.25 U	0.25 U	0.25 U	0.25 U	0.25 U
Aroclor-1242		2.5 UD	0.25 U	0.25 U	0.25 U	0.25 U	0.25 U
Aroclor-1248		2.5 UD	0.25 U	0.25 U	0.25 U	0.25 U	0.25 U
Aroclor-1254		2.5 UD	0.25 U	0.25 U	0.25 U	0.25 U	0.25 U
Aroclor-1260		83 D	0.25 U	0.25 U	0.25 U	0.25 U	0.25 U
Aroclor-1262		2.5 UD	0.25 U	0.25 U	0.25 U	0.25 U	0.25 U
Aroclor-1268		2.5 UD	0.25 U	0.25 U	0.25 U	0.25 U	0.25 U
Total PCBs		83 D	0	0	0	0	0

J - Estimated value
U - Indicates that the compound was analyzed for but not detected
V – Qualifier added and/or value altered during validation
P – Aroclor concentrations between two GC columns differed by greater than 25 percent
µg/L - Micrograms per liter
ft bls - Feet below land surface
PCBs - Polychlorinated Biphenyls

Table 2. Summary of Polychlorinated Biphenyl Concentrations in Sewer-Water Samples Collected in The Primary Sewer System Sunnyside Yard, Queens, New York

Parameter (Concentrations in µg/L)	Sample Designation:	MH-38	MH-38 Filtered	MH-40	MH-40 Filtered	MH-42	MH-42 Filtered
	Sample Date:	10/12/2010	10/12/2010	10/12/2010	10/12/2010	10/12/2010	10/12/2010
	Location:	-	-	-	-	-	-
Aroclor-1016		0.25 U	0.25 U	0.25 U	0.25 U	0.25 U	0.25 U
Aroclor-1221		0.25 U	0.25 U	0.25 U	0.25 U	0.25 U	0.25 U
Aroclor-1232		0.25 U	0.25 U	0.25 U	0.25 U	0.25 U	0.25 U
Aroclor-1242		0.25 U	0.25 U	0.25 U	0.25 U	0.25 U	0.25 U
Aroclor-1248		0.25 U	0.25 U	0.25 U	0.25 U	0.25 U	0.25 U
Aroclor-1254		0.25 U	0.25 U	0.25 U	0.25 U	0.25 U	0.25 U
Aroclor-1260		0.25 U	0.25 U	2.1	0.25 U	0.24 J	0.25 U
Aroclor-1262		0.25 U	0.25 U	0.25 U	0.25 U	0.25 U	0.25 U
Aroclor-1268		0.25 U	0.25 U	0.25 U	0.25 U	0.25 U	0.25 U
Total PCBs		0	0	2.1	0	0.24 J	0

J - Estimated value
U - Indicates that the compound was analyzed for but not detected
V – Qualifier added and/or value altered during validation
P – Aroclor concentrations between two GC columns differed by greater than 25 percent
µg/L - Micrograms per liter
ft bls - Feet below land surface
PCBs - Polychlorinated Biphenyls

Table 2. Summary of Polychlorinated Biphenyl Concentrations in Sewer-Water Samples Collected in The Primary Sewer System Sunnyside Yard, Queens, New York

Parameter (Concentrations in µg/L)	Sample Designation:	MH-45	MH-45 Filtered	MH-51	MH-51 Filtered	MH-52	MH-52 Filtered
	Sample Date:	10/11/2010	10/11/2010	10/12/2010	10/12/2010	10/12/2010	10/12/2010
	Location:	-	-	-	-	-	-
Aroclor-1016		0.25 U	0.25 U	0.25 U	0.25 U	0.25 U	0.25 U
Aroclor-1221		0.25 U	0.25 U	0.25 U	0.25 U	0.25 U	0.25 U
Aroclor-1232		0.25 U	0.25 U	0.25 U	0.25 U	0.25 U	0.25 U
Aroclor-1242		0.25 U	0.25 U	0.25 U	0.25 U	0.25 U	0.25 U
Aroclor-1248		0.25 U	0.25 U	0.25 U	0.25 U	0.25 U	0.25 U
Aroclor-1254		0.25 U	0.25 U	0.25 U	0.25 U	0.25 U	0.25 U
Aroclor-1260		0.23 J	0.25 U	0.25 U	0.25 U	0.14 J	0.25 U
Aroclor-1262		0.25 U	0.25 U	0.25 U	0.25 U	0.25 U	0.25 U
Aroclor-1268		0.25 U	0.25 U	0.25 U	0.25 U	0.25 U	0.25 U
Total PCBs		0.23 J	0	0	0	0.14 J	0

J - Estimated value
U - Indicates that the compound was analyzed for but not detected
V – Qualifier added and/or value altered during validation
P – Aroclor concentrations between two GC columns differed by greater than 25 percent
µg/L - Micrograms per liter
ft bls - Feet below land surface
PCBs - Polychlorinated Biphenyls

Table 2. Summary of Polychlorinated Biphenyl Concentrations in Sewer-Water Samples Collected in The Primary Sewer System Sunnyside Yard, Queens, New York

Parameter (Concentrations in µg/L)	**Sample Designation:**	MH-69	MH-69 Filtered
	Sample Date:	10/12/2010	10/12/2010
	Location:	-	-
Aroclor-1016		0.25 U	0.25 U
Aroclor-1221		0.25 U	0.25 U
Aroclor-1232		0.25 U	0.25 U
Aroclor-1242		0.25 U	0.25 U
Aroclor-1248		0.25 U	0.25 U
Aroclor-1254		0.25 U	0.25 U
Aroclor-1260		0.25 U	0.25 U
Aroclor-1262		0.25 U	0.25 U
Aroclor-1268		0.25 U	0.25 U
Total PCBs		0	0

J - Estimated value
U - Indicates that the compound was analyzed for but not detected
V – Qualifier added and/or value altered during validation
P – Aroclor concentrations between two GC columns differed by greater than 25 percent
µg/L - Micrograms per liter
ft bls - Feet below land surface
PCBs - Polychlorinated Biphenyls

Table 1. Summary of Polychlorinated Biphenyl Compound Concentrations in Sewer-Sediment Samples Collected in the Primary Sewer System, Sunnyside Yard, Queens, New York

Parameter (Concentrations in µg/kg)	Sample Designation:	DUP-101110	DUP-101210	MH-2	MH-2	MH-3	MH-6	MH-11
	Sample Date:	10/11/2010	10/12/2010	10/12/2010	10/12/2010	10/11/2010	10/11/2010	10/11/2010
	Location:	-	-	41 in. pipe diam.	55 in. pipe diam.	-	-	-
Aroclor-1016		31 U	30 U	39 U	35 U	36 U	4000 U D	33 U
Aroclor-1221		31 U	30 U	39 U	35 U	36 U	4000 U D	33 U
Aroclor-1232		31 U	30 U	39 U	35 U	36 U	4000 U D	33 U
Aroclor-1242		31 U	30 U	39 U	35 U	36 U	4000 U D	33 U
Aroclor-1248		31 U UJ	30 U	39 U	35 U	36 U	4000 U D	33 U
Aroclor-1254		31 U	30 U	39 U	35 U	36 U	4000 U D	33 U
Aroclor-1260		370 J	86 J	1800	510	36 U	120000 D	520
Aroclor-1262		31 U	30 U	39 U	35 U	36 U	4000 U D	33 U
Aroclor-1268		31 U	30 U	39 U	35 U	36 U	4000 U D	33 U
Total PCBs		370 J	86 J	1800	510	0	120000 D	520

J - Estimated value
U - Indicates that the compound was analyzed for but not detected
V – Qualifier added and/or value altered during validation
P - There is a greater than 25 percent difference for detected concentrations between the two GC columns Aroclor target analyte
D - Compound identified in an analysis at a secondary dilution
µg/kg - Micrograms per kilograms
PCBs - Polychlorinated Biphenyls

Table 1. Summary of Polychlorinated Biphenyl Compound Concentrations in Sewer-Sediment Samples Collected in the Primary Sewer System, Sunnyside Yard, Queens, New York

Parameter (Concentrations in µg/kg)	Sample Designation:	MH-38	MH-40	MH-42	MH-45	MH-52	MH-69
	Sample Date:	10/12/2010	10/12/2010	10/12/2010	10/11/2010	10/12/2010	10/12/2010
	Location:	-	-	-	-	-	-
Aroclor-1016		350 U D	31 U	35 U	32 U	33 U	32 U
Aroclor-1221		350 U D	31 U	35 U	32 U	33 U	32 U
Aroclor-1232		350 U D	31 U	35 U	32 U	33 U	32 U
Aroclor-1242		350 U D	31 U	35 U	32 U	33 U	32 U
Aroclor-1248		350 U D	31 U	110	150 J	33 U	32 U
Aroclor-1254		350 U D	31 U	35 U	32 U	33 U	32 U
Aroclor-1260		7800 D	31 U UJ	1300	1900 J	540	72
Aroclor-1262		350 U D	31 U	35 U	32 U	33 U	32 U
Aroclor-1268		350 U D	31 U	35 U	32 U	33 U	32 U
Total PCBs		7800 D	0	1410	2050 J	540	72

J - Estimated value
U - Indicates that the compound was analyzed for but not detected
V – Qualifier added and/or value altered during validation
P - There is a greater than 25 percent difference for detected concentrations between the two GC columns Aroclor target analyte
D - Compound identified in an analysis at a secondary dilution
µg/kg - Micrograms per kilograms
PCBs - Polychlorinated Biphenyls

Data Validation Services

120 Cobble Creek Road P.O. Box 208
North Creek, NY 12853

Phone 518-251-4429
Facsimile 518-251-4428

April 22, 2011

Richard Maxwell
Roux Associates
209 Shafter St.
Islandia, NY 11749

RE: **D**ata **U**sability **S**ummary **R**eport for the Amtrak OU-5 site
Hampton Clarke-Veritech SDG Nos. 1031617, 1031618, 1031724, and 1031726

Dear Mr. Maxwell:

Review has been completed for the data packages generated by Hampton Clarke-Veritech (HC-V) that pertain to samples collectedb 03/16/11 and 03/17/11 at the Amtrak OU-5 site. Twenty-one soil/sludge samples, two soil field duplicates, and the total and filtered fractions of twenty-six aqueous samples and two field duplicates were analyzed for Aroclor PCBs. The analytical method utilized is that of the USEPA SW846 method 8082.

The data packages submitted contain full deliverables for validation, but this usability report is generated from review of the summary form information, with review of sample raw data, and limited review of associated QC raw data. Full validation has not been performed. However, the reported summary forms have been reviewed for application of validation qualifiers, using guidance from the USEPA Region 2 validation SOPs, the USEPA National Functional Guidelines for Data Review, the specific laboratory methodologies, and professional judgment, as affects the usability of the data. The following items were reviewed:

* Laboratory Narrative Discussion
* Custody Documentation
* Holding Times
* Surrogate Standard Recoveries
* Matrix Spike Recoveries/Duplicate Correlations
* Field Duplicate Correlations
* Preparation Blanks
* Laboratory Control Samples
* Instrument Performance
* Sample Result Verification

Those items listed above which show deficiencies are discussed within the text of this narrative. All of the other items were determined to be acceptable for the DUSR level of review.

In summary, sample analyses were generally conducted in compliance with the required analytical protocols. Sample data are usable, with qualification of some of the sample results as quantitatively estimated, or with edit of values/reporting limits. There is evidence of possible non-homogenous matrices.

Copies of the laboratory case narratives are attached to this text, and should be reviewed in conjunction with this report. Also included with the report are client results tables annotated to reflect the data qualifications and edits recommended within this report.

The dates of collection for the sample locations noted below are parenthetically indicated.

The following text discusses quality issues of concern.

Data Package Completeness

No summary for dual column quantitative correlation was provided by HC-V. This parameter was reviewed from the raw data during the validation process.

Some of the sediment raw data chromatograms were not scaled properly, maximizing a sulfur interferent. This prohibits independent visual confirmation of some of the non-detected reported results. Full validation would require resubmitted chromatograms. For those affected samples with Aroclor detections, pattern identification was possible through review of the integration output.

Many of the detected responses for Aroclor congeners and surrogate standards required manual intervention. This should have been clarified in the laboratory data package, including manual area integration plots.

The soil preparation log for samples reported in SDG 1031726 should have stated that 20 g were used for the extraction, not 20 mL.

Field Duplicates

Blind field duplicate evaluations were performed for the total and filtered fractions of the aqueous samples and the soil at locations MHS-2(55) (3/16), MHW-2 (3/16), MHS-6(3/17), and MHW-6 (3/17). The following outliers are noted below, with results qualified as estimated in the indicated parent sample and its duplicate:

Aroclor 1260 (98%RPD) in MHS-2(55) (3/16)
Aroclor 1260 (57%RPD) in MHS-6 (3/17)
Aroclor 1260 (130%RPD) in MHW-6 (3/1

PCB Analyses by EPA 8082

The Aroclor mixture detection reported for MHS-42 (3/17) is Aroclor 1254, but inspection of the raw data shows that it is best characterized as Aroclor 1260. During validation the detected value for that mixture was recalculated based on response peak height, edited accordingly, and qualified as estimated because peak area was not used. The result for Aroclor 1254 in that sample was edited to non-

detection at an elevated reporting corresponding to the originally reported concentration. This reflects that there is evidence of presence of that Aroclor in the sample, but at an undetermined level due to interference from the Aroclor 1260.

Several of the samples were also processed at dilution in order to bring Aroclor 1260 responses within the calibration range of the instrument. The reporting limits for Aroclors 1242, 1265, and 1260 in those samples have been edited upward by a factor of the dilution because the Aroclor 1260 produced too much interference in the undiluted sample analyses to allow determination of their constituency. The affected samples are: MHS-38 (3/16), MHS-6 (3/16), DUPS-031611, MHS-6 (3/17), DUPS-031711, DUP-031711, and MHS-38 (3/17)

The results for Aroclors 1262 and 1268 in MHS-45 (3/16) have been qualified as estimated due to interference from a large late-eluting response noted in the chromatogram.

The matrix spikes for Aroclors 1016 and 1260 in MHS-11 (3/16), MHS-69 (3/16), and the filtered and unfiltered fractions of locations MHW-69 (3/16) and MHW-38 (3/17) show accuracy and precision within laboratory acceptance ranges. Spiked blanks also show compliant recoveries.

The matrix spikes for MHS-38 (3/17) were diluted beyond the ability to perform the evaluation due to the relatively very high concentration of Aroclor 1260 in the parent sample. However, it is noted that the detected values for Aroclor 1260 in the matrix spikes of that sample show an inconsistency (140%RPD) that is typical of a non-homogeneous matrix. The result for that mixture in the parent sample has therefore been qualified as estimated in value.

Holding times meet validation protocol guidelines. Surrogate standard recoveries are within recommended acceptance ranges, unless diluted beyond evaluation. Blanks show no contamination.

Instrument performance was compliant. The dual column quantitative correlations for the sample detections are acceptable.

Total and filtered fractions of the aqueous samples correlate well.

Please do not hesitate to contact me if you have comments or questions regarding this report.

Very truly yours,

Judy Harry

Judy Harry

VALIDATION DATA QUALIFIER DEFINITIONS

U	The analyte was analyzed for, but was not detected above the level of the associated reported quantitation limit.
J	The analyte was positively identified; the associated numerical value is an approximate concentration of the analyte in the sample.
UJ	The analyte was not detected. The associated reported quantitation limit is an estimate and may be inaccurate or imprecise.
NJ	The detection is tentative in identification and estimated in value. Although there is presumptive evidence of the analyte, the result should be used with caution as a potential false positive and/or elevated quantitative value.
R	The data are unusable. The analyte may or may not be present.
EMPC	The results do not meet all criteria for a confirmed identification. The quantitative value represents the Estimated Maximum Possible Concentration of the analyte in the sample.

CLIENT and LABORATORY SAMPLE IDs and CASE NARRATIVES

HCV Case Narrative/Conformance Summary

Client: Roux Associates
Project: Amtrak Sunnyside Yard

HCV Project: 1031617

Hampton-Clarke/Veritech (HC·V) received the following samples on March 16, 2011:

Client ID	HCV Sample ID	Matrix	Analysis
MHW-11	AC57835-001	Aqueous	PCB (8082)
MHWF-11	AC57835-002	Aqueous	PCB (8082)
MHS-11	AC57835-003	Sludge	PCB (8082)
MHW-3	AC57835-004	Aqueous	PCB (8082)
MHWF-3	AC57835-005	Aqueous	PCB (8082)
MHW-40	AC57835-006	Aqueous	PCB (8082)
MHWF-40	AC57835-007	Aqueous	PCB (8082)
MHS-40	AC57835-008	Sludge	PCB (8082)
MHW-8	AC57835-009	Aqueous	PCB (8082)
MHWF-8	AC57835-010	Aqueous	PCB (8082)
MHS-8	AC57835-011	Soil	PCB (8082)
MHW-2(41)	AC57835-012	Aqueous	PCB (8082)
MHWF-2(41)	AC57835-013	Aqueous	PCB (8082)
MHW-2(55)	AC57835-014	Aqueous	PCB (8082)
MHWF-2(55)	AC57835-015	Aqueous	PCB (8082)
MHS-2(41)	AC57835-016	Sludge	PCB (8082)
MHS-2(55)	AC57835-017	Sludge	PCB (8082)
DUPF-031611	AC57835-018	Aqueous	PCB (8082)
DUP-031611	AC57835-019	Aqueous	PCB (8082)
DUPS-031611	AC57835-020	Sludge	PCB (8082)

PCB Analysis:

The recovery of DCB surrogate on column 1 is biased high, outside QC limits in the undiluted run of sample AC57835-020 due to matrix interference. The sample was reanalyzed at a 10x dilution with surrogate passing QC limits. The compounds reported from both analyses.

I certify that this data package is in compliance with the terms and conditions of the contract, both technically and for completeness, for other than the conditions detailed above. Release of the data contained in this hardcopy data package and in the computer-readable data has been authorized by the Laboratory Manager or his designee, as verified by the following signature.

Jeri Ross — Quality Assurance Director

Or

Stanley Gilewicz — Laboratory Director

4/13/11 — Date

HCV Case Narrative/Conformance Summary

Client: Roux Associates
Project: Amtrak Sunnyside OU-5

HCV Project: 1031618

Hampton-Clarke/Veritech (HCV) received the following samples on March 16, 2011:

Client ID	HCV Sample ID	Matrix	Analysis
MHW-51	AC57836-001	Aqueous	PCB (8082)
MHWF-51	AC57836-002	Aqueous	PCB (8082)
MHS-52	AC57836-003	Soil	PCB (8082)
MHW-52	AC57836-004	Aqueous	PCB (8082)
MHWF-52	AC57836-005	Aqueous	PCB (8082)
MHW-38	AC57836-006	Aqueous	PCB (8082)
MHWF-38	AC57836-007	Aqueous	PCB (8082)
MHS-38	AC57836-008	Soil	PCB (8082)
MHS-45	AC57836-009	Soil	PCB (8082)
MHW-45	AC57836-010	Aqueous	PCB (8082)
MHWF-45	AC57836-011	Aqueous	PCB (8082)
MHW-42	AC57836-012	Aqueous	PCB (8082)
MHWF-42	AC57836-013	Aqueous	PCB (8082)
MHS-42	AC57836-014	Soil	PCB (8082)
MHW-69	AC57836-015	Aqueous	PCB (8082)
MHWF-69	AC57836-016	Aqueous	PCB (8082)
MHW-69 MS	AC57836-017	Aqueous	PCB (8082)
MHWF-69 MS	AC57836-018	Aqueous	PCB (8082)
MHW-69 MSD	AC57836-019	Aqueous	PCB (8082)
MHWF-69 MSD	AC57836-020	Aqueous	PCB (8082)
MHS-69	AC57836-021	Soil	PCB (8082)
MHS-69 MS	AC57836-022	Soil	PCB (8082)
MHS-69 MSD	AC57836-023	Soil	PCB (8082)
Field Blank 031611	AC57836-024	Aqueous	PCB (8082)
MHS-6	AC57836-025	Soil	PCB (8082)
MHW-6	AC57836-026	Aqueous	PCB (8082)
MHWF-6	AC57836-027	Aqueous	PCB (8082)

PCB Analysis:

Data conforms to method requirements.

I certify that this data package is in compliance with the terms and conditions of the contract, both technically and for completeness, for other than the conditions detailed above. Release of the data contained in this hardcopy data package and in the computer-readable data has been authorized by the Laboratory Manager or his designee, as verified by the following signature.

Jeri Rossi
Quality Assurance Director

Or

Stanley Gilewicz
Laboratory Director

4/14/11
Date

HCV Case Narrative/Conformance Summary

Client: Roux Associates
Project: Amtrak Sunnyside Yard

HCV Project: 1031724

Hampton-Clarke/Veritech (HCV) received the following samples on March 17, 2011:

Client ID	HCV Sample ID	Matrix	Analysis
MHW-2(41)	AC57866-001	Aqueous	PCB (8082)
MHWF-2(41)	AC57866-002	Aqueous	PCB (8082)
MHS-2(41)	AC57866-003	Sludge	PCB (8082)
MHW-2(55)	AC57866-004	Aqueous	PCB (8082)
MHWF-2(55)	AC57866-005	Aqueous	PCB (8082)
MHS-2(55)	AC57866-006	Sludge	PCB (8082)
MHW-3	AC57866-007	Aqueous	PCB (8082)
MHWF-3	AC57866-008	Aqueous	PCB (8082)
MHW-6	AC57866-009	Aqueous	PCB (8082)
MHWF-6	AC57866-010	Aqueous	PCB (8082)
MHS-6	AC57866-011	Sludge	PCB (8082)
MHW-8	AC57866-012	Aqueous	PCB (8082)
MHWF-8	AC57866-013	Aqueous	PCB (8082)
MHW-11	AC57866-014	Aqueous	PCB (8082)
MHWF-11	AC57866-015	Aqueous	PCB (8082)
MHS-11	AC57866-016	Sludge	PCB (8082)
MHW-40	AC57866-017	Aqueous	PCB (8082)
MHWF-40	AC57866-018	Aqueous	PCB (8082)
MHS-40	AC57866-019	Sludge	PCB (8082)
DUP-031711	AC57866-020	Aqueous	PCB (8082)
DUPF-031711	AC57866-021	Aqueous	PCB (8082)
DUPS-031711	AC57866-022	Sludge	PCB (8082)

PCB Analysis:

Data conforms to method requirements.

I certify that this data package is in compliance with the terms and conditions of the contract, both technically and for completeness, for other than the conditions detailed above. Release of the data contained in this hardcopy data package and in the computer-readable data has been authorized by the Laboratory Manager or his designee, as verified by the following signature.

Jeri Rossi
Jeri Rossi
Quality Assurance Director

Or

Stanley Gilewicz
Laboratory Director

4/15/11
Date

HCV Case Narrative/Conformance Summary

Client: Roux Associates
Project: Amtrak Sunnyside Yard

HCV Project: 1031726

Hampton-Clarke/Veritech (HCV) received the following samples on March 17, 2011:

Client ID	HCV Sample ID	Matrix	Analysis
MHW-38	AC57868-001	Aqueous	PCB (8082)
MHWF-38	AC57868-002	Aqueous	PCB (8082)
MHW-38 MS	AC57868-003	Aqueous	PCB (8082)
MHWF-38 MS	AC57868-004	Aqueous	PCB (8082)
MHW-38 MSD	AC57868-005	Aqueous	PCB (8082)
MHWF-38 MSD	AC57868-006	Aqueous	PCB (8082)
MHS-38	AC57868-007	Soil	PCB (8082)
MHS-38 MS	AC57868-008	Soil	PCB (8082)
MHS-38 MSD	AC57868-009	Soil	PCB (8082)
MHW-51	AC57868-010	Aqueous	PCB (8082)
MHWF-51	AC57868-011	Aqueous	PCB (8082)
MHW-52	AC57868-012	Aqueous	PCB (8082)
MHWF-52	AC57868-013	Aqueous	PCB (8082)
MHS-52	AC57868-014	Soil	PCB (8082)
MHW-45	AC57868-015	Aqueous	PCB (8082)
MHWF-45	AC57868-016	Aqueous	PCB (8082)
MHS-45	AC57868-017	Soil	PCB (8082)
MHW-42	AC57868-018	Aqueous	PCB (8082)
MHWF-42	AC57868-019	Aqueous	PCB (8082)
MHS-42	AC57868-020	Soil	PCB (8082)
MHW-69	AC57868-021	Aqueous	PCB (8082)
MHWF-69	AC57868-022	Aqueous	PCB (8082)
MHS-69	AC57868-023	Soil	PCB (8082)
FIELD BLANK	AC57868-024	Aqueous	PCB (8082)

PCB Analysis:

The surrogates, Matrix Spike and Matrix Spike Duplicate compounds were diluted out in batch SMB4810. All QC criteria were met in the Laboratory Control Sample (MBS).

I certify that this data package is in compliance with the terms and conditions of the contract, both technically and for completeness, for other than the conditions detailed above. Release of the data contained in this hardcopy data package and in the computer-readable data has been authorized by the Laboratory Manager or his designee, as verified by the following signature.

Jeri Rossi
Jeri Rossi
Quality Assurance Director

Or

Stanley Gilewicz
Laboratory Director

4/15/11
Date

QUALIFIED CLIENT RESULTS TABLES

Table 2. Summary of Polychlorinated Biphenyl Concentrations in Sewer-Water Samples Collected in The Primary Sewer System Sunnyside Yard, Queens, New York

Parameter (Concentrations in µg/L)	Site-Specific Cleanup Levels	**Sample Designation:**	DUP-101110 Filtered	DUP-101110	DUP-101210 Filtered	DUP-101210	DUP-031711
		Sample Date:	10/11/2010	10/11/2010	10/12/2010	10/12/2010	3/17/2011
		Location:	-	-	-	-	-
Aroclor-1016	--		0.043 U	0.043 U	0.043 U	0.043 U	0.25 U
Aroclor-1221	--		0.062 U	0.062 U	0.062 U	0.062 U	0.25 U
Aroclor-1232	--		0.038 U	0.038 U	0.038 U	0.038 U	0.25 U
Aroclor-1242	--		0.038 U	0.038 U	0.038 U	0.038 U	2.5 ~~0.25~~ U
Aroclor-1248	--		0.045 U	0.045 U	0.045 U	0.045 U	2.5 ~~0.2~~5 U
Aroclor-1254	--		0.036 U	0.036 U	0.036 U	0.036 U	2.5 ~~0.2~~5 U
Aroclor-1260	--		0.046 U	0.046 U	0.046 U	2.2	70 J
Aroclor-1262	--		0.046 U	0.046 U	0.046 U	0.046 U	0.25 U
Aroclor-1268	--		0.015 U	0.015 U	0.015 U	0.015 U	0.25 U
Total PCBs	1		0	0	0	**2.2**	**70** J

J - Estimated value

U - Indicates that the compound was analyzed for but not detected

V – Qualifier added and/or value altered during validation

P Aroclor concentrations between two GC columns differed by greater than 25 percent

µg/L - Micrograms per liter

ft bls - Feet below land surface

PCBs - Polychlorinated Biphenyls

Bolded results indicate that the compound exceeds the Site-Specific Cleanup Levels

Table 2. Summary of Polychlorinated Biphenyl Concentrations in Sewer-Water Samples Collected in The Primary Sewer System Sunnyside Yard, Queens, New York

Parameter (Concentrations in µg/L)	Site-Specific Cleanup Levels	**Sample Designation:**	DUPF-031711 Filtered	MH-2	MH-2 Filtered	MHW-2
		Sample Date:	3/17/2011	10/12/2010	10/12/2010	3/16/2011
		Location:	-	41 in. pipe diam.	41 in. pipe diam.	41 in. pipe diam.
Aroclor-1016	--		0.25 U	0.043 U	0.043 U	0.27 U
Aroclor-1221	--		0.25 U	0.062 U	0.062 U	0.27 U
Aroclor-1232	--		0.25 U	0.038 U	0.038 U	0.27 U
Aroclor-1242	--		0.25 U	0.038 U	0.038 U	0.27 U
Aroclor-1248	--		0.25 U	0.045 U	0.045 U	0.27 U
Aroclor-1254	--		0.25 U	0.036 U	0.036 U	0.27 U
Aroclor-1260	--		0.25 U	0.26	0.046 U	0.84
Aroclor-1262	--		0.25 U	0.046 U	0.046 U	0.27 U
Aroclor-1268	--		0.25 U	0.015 U	0.015 U	0.27 U
Total PCBs	1		0	0.26	0	0.84

J - Estimated value
U - Indicates that the compound was analyzed for but not detected
V – Qualifier added and/or value altered during validation
P – Aroclor concentrations between two GC columns differed by greater than 25 percent
µg/L - Micrograms per liter
ft bls - Feet below land surface
PCBs - Polychlorinated Biphenyls
Bolded results indicate that the compound exceeds the Site-Specific Cleanup Levels

Table 2. Summary of Polychlorinated Biphenyl Concentrations in Sewer-Water Samples Collected in The Primary Sewer System Sunnyside Yard, Queens, New York

Parameter (Concentrations in µg/L)	Site-Specific Cleanup Levels	**Sample Designation:**	MHW-2 Filtered	MH-2	MH-2 Filtered	MHW-2
		Sample Date:	3/16/2011	10/12/2010	10/12/2010	3/16/2011
		Location:	41 in. pipe diam.	55 in. pipe diam.	55 in. pipe diam.	55 in. pipe diam.
Aroclor-1016	--		0.28 U	0.043 U	0.043 U	0.26 U
Aroclor-1221	--		0.28 U	0.062 U	0.062 U	0.26 U
Aroclor-1232	--		0.28 U	0.038 U	0.038 U	0.26 U
Aroclor-1242	--		0.28 U	0.038 U	0.038 U	0.26 U
Aroclor-1248	--		0.28 U	0.045 U	0.045 U	0.26 U
Aroclor-1254	--		0.28 U	0.036 U	0.036 U	0.26 U
Aroclor-1260	--		0.28 U	0.22 JV	0.046 U	0.72
Aroclor-1262	--		0.28 U	0.046 U	0.046 U	0.26 U
Aroclor-1268	--		0.28 U	0.015 U	0.015 U	0.26 U
Total PCBs	1		0	0.22	0	0.72

J - Estimated value
U - Indicates that the compound was analyzed for but not detected
V – Qualifier added and/or value altered during validation
P – Aroclor concentrations between two GC columns differed by greater than 25 percent
µg/L - Micrograms per liter
ft bls - Feet below land surface
PCBs - Polychlorinated Biphenyls
Bolded results indicate that the compound exceeds the Site-Specific Cleanup Levels

Table 2. Summary of Polychlorinated Biphenyl Concentrations in Sewer-Water Samples Collected in The Primary Sewer System Sunnyside Yard, Queens, New York

Parameter (Concentrations in µg/L)	Site-Specific Cleanup Levels	**Sample Designation:**	MHW-2 Filtered	MHW-2DUP	MHW-2DUP Filtered	MHW-2	MHW-2 Filtered
		Sample Date:	3/16/2011	3/16/2011	3/16/2011	3/17/2011	3/17/2011
		Location:	55 in. pipe diam.			41 in. pipe diam.	41 in. pipe diam.
Aroclor-1016	--		0.27 U	0.26 U	0.27 U	0.26 U	0.25 U
Aroclor-1221	--		0.27 U	0.26 U	0.27 U	0.26 U	0.25 U
Aroclor-1232	--		0.27 U	0.26 U	0.27 U	0.26 U	0.25 U
Aroclor-1242	--		0.27 U	0.26 U	0.27 U	0.26 U	0.25 U
Aroclor-1248	--		0.27 U	0.26 U	0.27 U	0.26 U	0.25 U
Aroclor-1254	--		0.27 U	0.26 U	0.27 U	0.26 U	0.25 U
Aroclor-1260	--		0.27 U	0.26 U	0.27 U	0.26 U	0.25 U
Aroclor-1262	--		0.27 U	0.26 U	0.27 U	0.26 U	0.25 U
Aroclor-1268	--		0.27 U	0.26 U	0.27 U	0.26 U	0.25 U
Total PCBs	1		0	0	0	0	0

J - Estimated value
U - Indicates that the compound was analyzed for but not detected
V – Qualifier added and/or value altered during validation
P – Aroclor concentrations between two GC columns differed by greater than 25 percent
µg/L - Micrograms per liter
ft bls - Feet below land surface
PCBs - Polychlorinated Biphenyls
Bolded results indicate that the compound exceeds the Site-Specific Cleanup Levels

Table 2. Summary of Polychlorinated Biphenyl Concentrations in Sewer-Water Samples Collected in The Primary Sewer System Sunnyside Yard, Queens, New York

Parameter (Concentrations in µg/L)	Site-Specific Cleanup Levels	**Sample Designation:**	MHW-2	MHW-2 Filtered	MH-3	MH-3 Filtered	MHW-3
		Sample Date:	3/17/2011	3/17/2011	10/11/2010	10/11/2010	3/16/2011
		Location:	55 in. pipe diam.	55 in. pipe diam.	-	-	
Aroclor-1016	--		0.25 U	0.25 U	0.044 U	0.043 U	0.28 U
Aroclor-1221	--		0.25 U	0.25 U	0.063 U	0.062 U	0.28 U
Aroclor-1232	--		0.25 U	0.25 U	0.039 U	0.038 U	0.28 U
Aroclor-1242	--		0.25 U	0.25 U	0.039 U	0.038 U	0.28 U
Aroclor-1248	--		0.25 U	0.25 U	0.046 U	0.045 U	0.28 U
Aroclor-1254	--		0.25 U	0.25 U	0.036 U	0.036 U	0.28 U
Aroclor-1260	--		0.25 U	0.25 U	0.18 JV	0.046 U	0.28 U
Aroclor-1262	--		0.25 U	0.25 U	0.047 U	0.046 U	0.28 U
Aroclor-1268	--		0.25 U	0.25 U	0.016 U	0.015 U	0.28 U
Total PCBs	1		0	0	0.18	0	0

J - Estimated value

U - Indicates that the compound was analyzed for but not detected

V – Qualifier added and/or value altered during validation

P – Aroclor concentrations between two GC columns differed by greater than 25 percent

µg/L - Micrograms per liter

ft bls - Feet below land surface

PCBs - Polychlorinated Biphenyls

Bolded results indicate that the compound exceeds the Site-Specific Cleanup Levels

Table 2. Summary of Polychlorinated Biphenyl Concentrations in Sewer-Water Samples Collected in The Primary Sewer System Sunnyside Yard, Queens, New York

Parameter (Concentrations in µg/L)	Site-Specific Cleanup Levels	**Sample Designation:**	MHW-3 Filtered	MHW-3	MHW-3 Filtered	MH-6	MH-6 Filtered	MHW-6
		Sample Date:	3/16/2011	3/17/2011	3/17/2011	10/11/2010	10/11/2010	3/16/2011
		Location:		-	-	-	-	
Aroclor-1016	--		0.27 U	0.26 U	0.25 U	0.43 U D	0.043 U	0.25 U
Aroclor-1221	--		0.27 U	0.26 U	0.25 U	0.62 U D	0.062 U	0.25 U
Aroclor-1232	--		0.27 U	0.26 U	0.25 U	0.38 U D	0.038 U	0.25 U
Aroclor-1242	--		0.27 U	0.26 U	0.25 U	0.38 U D	0.038 U	0.25 U
Aroclor-1248	--		0.27 U	0.26 U	0.25 U	0.45 U D	0.045 U	0.25 U
Aroclor-1254	--		0.27 U	0.26 U	0.25 U	0.36 U D	0.036 U	0.25 U
Aroclor-1260	--		0.27 U	2.8	1.8	83 D	0.046 U	12
Aroclor-1262	--		0.27 U	0.26 U	0.25 U	0.46 U D	0.046 U	0.25 U
Aroclor-1268	--		0.27 U	0.26 U	0.25 U	0.15 U D	0.015 U	0.25 U
Total PCBs	1		0	**2.8**	**1.8**	**83 D**	0	**12**

J - Estimated value

U - Indicates that the compound was analyzed for but not detected

V – Qualifier added and/or value altered during validation

P – Aroclor concentrations between two GC columns differed by greater than 25 percent

µg/L - Micrograms per liter

ft bls - Feet below land surface

PCBs - Polychlorinated Biphenyls

Bolded results indicate that the compound exceeds the Site-Specific Cleanup Levels

Table 2. Summary of Polychlorinated Biphenyl Concentrations in Sewer-Water Samples Collected in The Primary Sewer System Sunnyside Yard, Queens, New York

Parameter (Concentrations in µg/L)	Site-Specific Cleanup Levels	**Sample Designation:**	MHW-6 Filtered	MHW-6	MHW-6 Filtered	MH-8	MH-8 Filtered	MHW-8
		Sample Date:	3/16/2011	3/17/2011	3/17/2011	10/11/2010	10/11/2010	3/16/2011
		Location:		-	-	-	-	
Aroclor-1016	--		0.27 U	0.25 U	0.25 U	0.043 U	0.043 U	0.25 U
Aroclor-1221	--		0.27 U	0.25 U	0.25 U	0.062 U	0.062 U	0.25 U
Aroclor-1232	--		0.27 U	0.25 U	0.25 U	0.038 U	0.038 U	0.25 U
Aroclor-1242	--		0.27 U	0.25 U	0.25 U	0.038 U	0.038 U	0.25 U
Aroclor-1248	--		0.27 U	0.25 U	0.25 U	0.045 U	0.045 U	0.25 U
Aroclor-1254	--		0.27 U	0.25 U	0.25 U	0.036 U	0.036 U	0.25 U
Aroclor-1260	--		0.27 U	16 J	0.25 U	0.046 U	0.046 U	0.25 U
Aroclor-1262	--		0.27 U	0.25 U	0.25 U	0.046 U	0.046 U	0.25 U
Aroclor-1268	--		0.27 U	0.25 U	0.25 U	0.015 U	0.015 U	0.25 U
Total PCBs	1		0	**16** J	0	0	0	0

J - Estimated value

U - Indicates that the compound was analyzed for but not detected

V – Qualifier added and/or value altered during validation

P – Aroclor concentrations between two GC columns differed by greater than 25 percent

µg/L - Micrograms per liter

ft bls - Feet below land surface

PCBs - Polychlorinated Biphenyls

Bolded results indicate that the compound exceeds the Site-Specific Cleanup Levels

Table 2. Summary of Polychlorinated Biphenyl Concentrations in Sewer-Water Samples Collected in The Primary Sewer System Sunnyside Yard, Queens, New York

Parameter (Concentrations in µg/L)	Site-Specific Cleanup Levels	**Sample Designation:**	MHW-8 Filtered	MHW-8	MHW-8 Filtered	MH-11	MH-11 Filtered	MHW-11
		Sample Date:	3/16/2011	3/17/2011	3/17/2011	10/11/2010	10/11/2010	3/16/2011
		Location:		-	-	-	-	
Aroclor-1016	--		0.27 U	0.25 U	0.25 U	0.043 U	0.043 U	0.27 U
Aroclor-1221	--		0.27 U	0.25 U	0.25 U	0.062 U	0.062 U	0.27 U
Aroclor-1232	--		0.27 U	0.25 U	0.25 U	0.038 U	0.038 U	0.27 U
Aroclor-1242	--		0.27 U	0.25 U	0.25 U	0.038 U	0.038 U	0.27 U
Aroclor-1248	--		0.27 U	0.25 U	0.25 U	0.045 U	0.045 U	0.27 U
Aroclor-1254	--		0.27 U	0.25 U	0.25 U	0.036 U	0.036 U	0.27 U
Aroclor-1260	--		0.27 U	0.25 U	0.25 U	0.046 U	0.046 U	0.98
Aroclor-1262	--		0.27 U	0.25 U	0.25 U	0.046 U	0.046 U	0.27 U
Aroclor-1268	--		0.27 U	0.25 U	0.25 U	0.015 U	0.015 U	0.27 U
Total PCBs	1		0	0	0	0	0	0.98

J - Estimated value

U - Indicates that the compound was analyzed for but not detected

V Qualifier added and/or value altered during validation

P – Aroclor concentrations between two GC columns differed by greater than 25 percent

µg/L - Micrograms per liter

ft bls - Feet below land surface

PCBs - Polychlorinated Biphenyls

Bolded results indicate that the compound exceeds the Site-Specific Cleanup Levels

Table 2. Summary of Polychlorinated Biphenyl Concentrations in Sewer-Water Samples Collected in The Primary Sewer System Sunnyside Yard, Queens, New York

Parameter (Concentrations in µg/L)	Site-Specific Cleanup Levels	**Sample Designation:**	MHW-11 Filtered	MHW-11	MHW-11 Filtered	MH-38	MH-38 Filtered	MHW-38
		Sample Date:	3/16/2011	3/17/2011	3/17/2011	10/12/2010	10/12/2010	3/16/2011
		Location:		-	-	-	-	
Aroclor-1016	--		0.27 U	0.25 U	0.25 U	0.043 U	0.043 U	0.25 U
Aroclor-1221	--		0.27 U	0.25 U	0.25 U	0.062 U	0.062 U	0.25 U
Aroclor-1232	--		0.27 U	0.25 U	0.25 U	0.038 U	0.038 U	0.25 U
Aroclor-1242	--		0.27 U	0.25 U	0.25 U	0.038 U	0.038 U	0.25 U
Aroclor-1248	--		0.27 U	0.25 U	0.25 U	0.045 U	0.045 U	0.25 U
Aroclor-1254	--		0.27 U	0.25 U	0.25 U	0.036 U	0.036 U	0.25 U
Aroclor-1260	--		0.27 U	0.25 U	0.25 U	0.046 U	0.046 U	0.92
Aroclor-1262	--		0.27 U	0.25 U	0.25 U	0.046 U	0.046 U	0.25 U
Aroclor-1268	--		0.27 U	0.25 U	0.25 U	0.015 U	0.015 U	0.25 U
Total PCBs	1		0	0	0	0	0	0.92

J - Estimated value

U - Indicates that the compound was analyzed for but not detected

V – Qualifier added and/or value altered during validation

P Aroclor concentrations between two GC columns differed by greater than 25 percent

µg/L - Micrograms per liter

ft bls - Feet below land surface

PCBs - Polychlorinated Biphenyls

Bolded results indicate that the compound exceeds the Site-Specific Cleanup Levels

Table 2. Summary of Polychlorinated Biphenyl Concentrations in Sewer-Water Samples Collected in The Primary Sewer System Sunnyside Yard, Queens, New York

Parameter (Concentrations in µg/L)	Site-Specific Cleanup Levels	**Sample Designation:** **Sample Date:** **Location:**	MHW-38 Filtered 3/16/2011	MHW-38 3/17/2011	MHW-38 Filtered 3/17/2011	MH-40 10/12/2010 -	MH-40 Filtered 10/12/2010 -	MHW-40 3/16/2011
Aroclor-1016	--		0.25 U	0.26 U	0.28 U	0.043 U	0.043 U	0.25 U
Aroclor-1221	--		0.25 U	0.26 U	0.28 U	0.062 U	0.062 U	0.25 U
Aroclor-1232	--		0.25 U	0.26 U	0.28 U	0.038 U	0.038 U	0.25 U
Aroclor-1242	--		0.25 U	0.26 U	0.28 U	0.038 U	0.038 U	0.25 U
Aroclor-1248	--		0.25 U	0.26 U	0.28 U	0.045 U	0.045 U	0.25 U
Aroclor-1254	--		0.25 U	0.26 U	0.28 U	0.036 U	0.036 U	0.25 U
Aroclor-1260	--		0.25 U	0.26 U	0.28 U	2.1	0.046 U	0.25 U
Aroclor-1262	--		0.25 U	0.26 U	0.28 U	0.046 U	0.046 U	0.25 U
Aroclor-1268	--		0.25 U	0.26 U	0.28 U	0.015 U	0.015 U	0.25 U
Total PCBs	1		0	0	0	**2.1**	0	0

J - Estimated value

U - Indicates that the compound was analyzed for but not detected

V – Qualifier added and/or value altered during validation

P – Aroclor concentrations between two GC columns differed by greater than 25 percent

µg/L - Micrograms per liter

ft bls - Feet below land surface

PCBs - Polychlorinated Biphenyls

Bolded results indicate that the compound exceeds the Site-Specific Cleanup Levels

Table 2. Summary of Polychlorinated Biphenyl Concentrations in Sewer-Water Samples Collected in The Primary Sewer System Sunnyside Yard, Queens, New York

Parameter (Concentrations in µg/L)	Site-Specific Cleanup Levels	**Sample Designation:**	MHW-40 Filtered	MHW-40	MHW-40 Filtered	MH-42	MH-42 Filtered	MHW-42
		Sample Date:	3/16/2011	3/17/2011	3/17/2011	10/12/2010	10/12/2010	3/16/2011
		Location:		-	-	-	-	
Aroclor-1016	--		0.26 U	0.25 U	0.26 U	0.043 U	0.043 U	0.25 U
Aroclor-1221	--		0.26 U	0.25 U	0.26 U	0.062 U	0.062 U	0.25 U
Aroclor-1232	--		0.26 U	0.25 U	0.26 U	0.038 U	0.038 U	0.25 U
Aroclor-1242	--		0.26 U	0.25 U	0.26 U	0.038 U	0.038 U	0.25 U
Aroclor-1248	--		0.26 U	0.25 U	0.26 U	0.045 U	0.045 U	0.25 U
Aroclor-1254	--		0.26 U	0.25 U	0.26 U	0.036 U	0.036 U	0.25 U
Aroclor-1260	--		0.26 U	0.25 U	0.26 U	0.24 JV	0.046 U	1
Aroclor-1262	--		0.26 U	0.25 U	0.26 U	0.046 U	0.046 U	0.25 U
Aroclor-1268	--		0.26 U	0.25 U	0.26 U	0.015 U	0.015 U	0.25 U
Total PCBs	1		0	0	0	0.24	0	1

J - Estimated value

U - Indicates that the compound was analyzed for but not detected

V – Qualifier added and/or value altered during validation

P – Aroclor concentrations between two GC columns differed by greater than 25 percent

µg/L - Micrograms per liter

ft bls - Feet below land surface

PCBs - Polychlorinated Biphenyls

Bolded results indicate that the compound exceeds the Site-Specific Cleanup Levels

Table 2. Summary of Polychlorinated Biphenyl Concentrations in Sewer-Water Samples Collected in The Primary Sewer System Sunnyside Yard, Queens, New York

Parameter (Concentrations in µg/L)	Site-Specific Cleanup Levels	**Sample Designation:** **Sample Date:** **Location:**	MHW-42 Filtered 3/16/2011	MHW-42 3/17/2011	MHW-42 Filtered 3/17/2011	MH-45 10/11/2010 -	MH-45 Filtered 10/11/2010 -	MHW-45 3/16/2011
Aroclor-1016	--		0.25 U	0.25 U	0.28 U	0.043 U	0.043 U	0.25 U
Aroclor-1221	--		0.25 U	0.25 U	0.28 U	0.062 U	0.062 U	0.25 U
Aroclor-1232	--		0.25 U	0.25 U	0.28 U	0.038 U	0.038 U	0.25 U
Aroclor-1242	--		0.25 U	0.25 U	0.28 U	0.038 U	0.038 U	0.25 U
Aroclor-1248	--		0.25 U	0.25 U	0.28 U	0.045 U	0.045 U	0.25 U
Aroclor-1254	--		0.25 U	0.25 U	0.28 U	0.036 U	0.036 U	0.25 U
Aroclor-1260	--		0.25 U	0.25 U	0.28 U	0.23 JV	0.046 U	0.3
Aroclor-1262	--		0.25 U	0.25 U	0.28 U	0.046 U	0.046 U	0.25 U
Aroclor-1268	--		0.25 U	0.25 U	0.28 U	0.015 U	0.015 U	0.25 U
Total PCBs	1		0	0	0	0.23	0	0.3

J - Estimated value

U - Indicates that the compound was analyzed for but not detected

V – Qualifier added and/or value altered during validation

P Aroclor concentrations between two GC columns differed by greater than 25 percent

µg/L - Micrograms per liter

ft bls - Feet below land surface

PCBs = Polychlorinated Biphenyls

Bolded results indicate that the compound exceeds the Site-Specific Cleanup Levels

Table 2. Summary of Polychlorinated Biphenyl Concentrations in Sewer-Water Samples Collected in The Primary Sewer System Sunnyside Yard, Queens, New York

Parameter (Concentrations in µg/L)	Site-Specific Cleanup Levels	**Sample Designation:** **Sample Date:** **Location:**	MHW-45 Filtered 3/16/2011	MHW-45 3/17/2011	MHW-45 Filtered 3/17/2011	MH-51 10/12/2010 -	MH-51 Filtered 10/12/2010 -	MHW-51 3/16/2011
Aroclor-1016	--		0.25 U	0.26 U	0.25 U	0.043 U	0.044 U	0.25 U
Aroclor-1221	--		0.25 U	0.26 U	0.25 U	0.062 U	0.063 U	0.25 U
Aroclor-1232	--		0.25 U	0.26 U	0.25 U	0.038 U	0.039 U	0.25 U
Aroclor-1242	--		0.25 U	0.26 U	0.25 U	0.038 U	0.039 U	0.25 U
Aroclor-1248	--		0.25 U	0.26 U	0.25 U	0.045 U	0.046 U	0.25 U
Aroclor-1254	--		0.25 U	0.26 U	0.25 U	0.036 U	0.036 U	0.25 U
Aroclor-1260	--		0.25 U	0.26 U	0.25 U	0.046 U	0.046 U	0.25 U
Aroclor-1262	--		0.25 U	0.26 U	0.25 U	0.046 U	0.047 U	0.25 U
Aroclor-1268	--		0.25 U	0.26 U	0.25 U	0.015 U	0.016 U	0.25 U
Total PCBs	1		0	0	0	0	0	0

J - Estimated value
U - Indicates that the compound was analyzed for but not detected
V – Qualifier added and/or value altered during validation
P - Aroclor concentrations between two GC columns differed by greater than 25 percent
µg/L - Micrograms per liter
ft bls - Feet below land surface
PCBs - Polychlorinated Biphenyls
Bolded results indicate that the compound exceeds the Site-Specific Cleanup Levels

Table 2. Summary of Polychlorinated Biphenyl Concentrations in Sewer-Water Samples Collected in The Primary Sewer System Sunnyside Yard, Queens, New York

Parameter (Concentrations in µg/L)	Site-Specific Cleanup Levels	**Sample Designation:**	MHW-51 Filtered	MHW-51	MHW-51 Filtered	MH-52	MH-52 Filtered	MHW-52
		Sample Date:	3/16/2011	3/17/2011	3/17/2011	10/12/2010	10/12/2010	3/16/2011
		Location:				-	-	
Aroclor-1016	--		0.25 U	0.25 U	0.25 U	0.046 U	0.043 U	0.25 U
Aroclor-1221	--		0.25 U	0.25 U	0.25 U	0.065 U	0.062 U	0.25 U
Aroclor-1232	--		0.25 U	0.25 U	0.25 U	0.04 U	0.038 U	0.25 U
Aroclor-1242	--		0.25 U	0.25 U	0.25 U	0.04 U	0.038 U	0.25 U
Aroclor-1248	--		0.25 U	0.25 U	0.25 U	0.047 U	0.045 U	0.25 U
Aroclor-1254	--		0.25 U	0.25 U	0.25 U	0.038 U	0.036 U	0.25 U
Aroclor-1260	--		0.25 U	0.25 U	0.25 U	0.14 JV	0.046 U	0.59
Aroclor-1262	--		0.25 U	0.25 U	0.25 U	0.049 U	0.046 U	0.25 U
Aroclor-1268	--		0.25 U	0.25 U	0.25 U	0.016 U	0.015 U	0.25 U
Total PCBs	1		0	0	0	0.14	0	0.59

J - Estimated value

U - Indicates that the compound was analyzed for but not detected

V Qualifier added and/or value altered during validation

P Aroclor concentrations between two GC columns differed by greater than 25 percent

µg/L - Micrograms per liter

ft bls - Feet below land surface

PCBs - Polychlorinated Biphenyls

Bolded results indicate that the compound exceeds the Site-Specific Cleanup Levels

Table 2. Summary of Polychlorinated Biphenyl Concentrations in Sewer-Water Samples Collected in The Primary Sewer System Sunnyside Yard, Queens, New York

Parameter (Concentrations in µg/L)	Site-Specific Cleanup Levels	**Sample Designation:** **Sample Date:** **Location:**	MHW-52 Filtered 3/16/2011	MHW-52 3/17/2011	MHW-52 Filtered 3/17/2011	MH-69 10/12/2010 -	MH-69 Filtered 10/12/2010 -	MHW-69 3/16/2011
Aroclor-1016	--		0.25 U	0.26 U	0.26 U	0.043 U	0.043 U	0.25 U
Aroclor-1221	--		0.25 U	0.26 U	0.26 U	0.062 U	0.062 U	0.25 U
Aroclor-1232	--		0.25 U	0.26 U	0.26 U	0.038 U	0.038 U	0.25 U
Aroclor-1242	--		0.25 U	0.26 U	0.26 U	0.038 U	0.038 U	0.25 U
Aroclor-1248	--		0.25 U	0.26 U	0.26 U	0.045 U	0.045 U	0.25 U
Aroclor-1254	--		0.25 U	0.26 U	0.26 U	0.036 U	0.036 U	0.25 U
Aroclor-1260	--		0.25 U	0.26 U	0.26 U	0.046 U	0.046 U	0.25 U
Aroclor-1262	--		0.25 U	0.26 U	0.26 U	0.046 U	0.046 U	0.25 U
Aroclor-1268	--		0.25 U	0.26 U	0.26 U	0.015 U	0.015 U	0.25 U
Total PCBs	1		0	0	0	0	0	0

J - Estimated value

U - Indicates that the compound was analyzed for but not detected

V – Qualifier added and/or value altered during validation

P – Aroclor concentrations between two GC columns differed by greater than 25 percent

µg/L - Micrograms per liter

ft bls - Feet below land surface

PCBs - Polychlorinated Biphenyls

Bolded results indicate that the compound exceeds the Site-Specific Cleanup Levels

Table 2. Summary of Polychlorinated Biphenyl Concentrations in Sewer-Water Samples Collected in The Primary Sewer System Sunnyside Yard, Queens, New York

Parameter (Concentrations in µg/L)	Site-Specific Cleanup Levels	**Sample Designation:** **Sample Date:** **Location:**	MHW-69 Filtered 3/16/2011	MHW-69 3/17/2011	MHW-69 Filtered 3/17/2011
Aroclor-1016	--		0.25 U	0.26 U	0.16 U
Aroclor-1221	--		0.25 U	0.26 U	0.16 U
Aroclor-1232	--		0.25 U	0.26 U	0.16 U
Aroclor-1242	--		0.25 U	0.26 U	0.16 U
Aroclor-1248	--		0.25 U	0.26 U	0.16 U
Aroclor-1254	--		0.25 U	0.26 U	0.16 U
Aroclor-1260	--		0.25 U	0.26 U	0.16 U
Aroclor-1262	--		0.25 U	0.26 U	0.16 U
Aroclor-1268	--		0.25 U	0.26 U	0.16 U
Total PCBs	1		0	0	0

J - Estimated value
U - Indicates that the compound was analyzed for but not detected
V – Qualifier added and/or value altered during validation
P – Aroclor concentrations between two GC columns differed by greater than 25 percent
µg/L - Micrograms per liter
ft bls - Feet below land surface
PCBs - Polychlorinated Biphenyls
Bolded results indicate that the compound exceeds the Site-Specific Cleanup Levels

Table 1. Summary of Polychlorinated Biphenyl Compound Concentrations in Sewer-Sediment Samples Collected in the Primary Sewer System, Sunnyside Yard, Queens, New York

Parameter (Concentrations in µg/kg)	Site-Specific Cleanup Levels	**Sample Designation:** **Sample Date:** **Location:**	MH-2 10/12/2010 41 in. pipe diam.	MH-2 10/12/2010 55 in. pipe diam.	MHS-2 3/16/2011 41 in. pipe diam.	MHS-2 3/16/2011 55 in. pipe diam.
Aroclor-1016	--		39 U	35 U	63 U	38 U
Aroclor-1221	--		39 U	35 U	63 U	38 U
Aroclor-1232	--		39 U	35 U	63 U	38 U
Aroclor-1242	--		39 U	35 U	63 U	38 U
Aroclor-1248	--		39 U	35 U	63 U	38 U
Aroclor-1254	--		39 U	35 U	63 U	38 U
Aroclor-1260	--		1800	510	1200	2600 J
Aroclor-1262	--		39 U	35 U	63 U	38 U
Aroclor-1268	--		39 U	35 U	63 U	38 U
Total PCBs	25		**1800**	**510**	**1200**	**2600** J

J - Estimated value
U - Indicates that the compound was analyzed for but not detected
V Qualifier added and/or value altered during validation
P - There is a greater than 25 percent difference for detected concentrations between the two GC columns Aroclor target analyte
D - Compound identified in an analysis at a secondary dilution
µg/kg - Micrograms per kilograms
PCBs - Polychlorinated Biphenyls
Bolded results indicate that the compound exceeds the Site-Specific Cleanup Levels

Table 1. Summary of Polychlorinated Biphenyl Compound Concentrations in Sewer-Sediment Samples Collected in the Primary Sewer System, Sunnyside Yard, Queens, New York

Parameter (Concentrations in µg/kg)	Site-Specific Cleanup Levels	**Sample Designation:**	MHS-2DUP	MHS-2	MHS-2	MH-3	MH-6	MHS-6
		Sample Date:	3/16/2011	3/17/2011	3/17/2011	10/11/2010	10/11/2010	3/16/2011
		Location:	-	41 in. pipe diam.	55 in. pipe diam.	-	-	-
Aroclor-1016	--		35 U	32 U	34 U	36 U	4000 U D	37 U
Aroclor-1221	--		35 U	32 U	34 U	36 U	4000 U D	37 U
Aroclor-1232	--		35 U	32 U	34 U	36 U	4000 U D	37 U
Aroclor-1242	--		350 ~~35~~ U	32 U	34 U	36 U	4000 U D	740 ~~37~~ U
Aroclor-1248	--		350 ~~35~~ U	32 U	34 U	36 U	4000 U D	740 ~~37~~ U
Aroclor-1254	--		350 ~~35~~ U	32 U	1100	36 U	4000 U D	740 ~~37~~ U
Aroclor-1260	--		7600 J	920	34 U	36 U	120000 D	21000
Aroclor-1262	--		35 U	32 U	34 U	36 U	4000 U D	37 U
Aroclor-1268	--		35 U	32 U	34 U	36 U	4000 U D	37 U
Total PCBs	25		**7600 J**	**920**	**1100**	0	**120000 D**	**21000**

J - Estimated value

U - Indicates that the compound was analyzed for but not detected

V – Qualifier added and/or value altered during validation

P - There is a greater than 25 percent difference for detected concentrations between the two GC columns Aroclor target analyte

D - Compound identified in an analysis at a secondary dilution

µg/kg - Micrograms per kilograms

PCBs - Polychlorinated Biphenyls

Bolded results indicate that the compound exceeds the Site-Specific Cleanup Levels

Table 1. Summary of Polychlorinated Biphenyl Compound Concentrations in Sewer-Sediment Samples Collected in the Primary Sewer System, Sunnyside Yard, Queens, New York

Parameter (Concentrations in µg/kg)	Site-Specific Cleanup Levels	**Sample Designation:**	MHS-6	MH-6DUP	MHS-8	MH-11	MHS-11	MHS-11	MH-38
		Sample Date:	3/17/2011	3/17/2011	3/16/2011	10/11/2010	3/16/2011	3/17/2011	10/12/2010
		Location:	-	-	-	-	-	-	-
Aroclor-1016	--		36 U	40 U	45 U	33 U	33 U	33 U	350 U D
Aroclor-1221	--		36 U	40 U	45 U	33 U	33 U	33 U	350 U D
Aroclor-1232	--		36 U	40 U	45 U	33 U	33 U	33 U	350 U D
Aroclor-1242	--		720 ~~36~~ U	800 ~~40~~ U	45 U	33 U	33 U	33 U	350 U D
Aroclor-1248	--		720 ~~36~~ U	800 ~~40~~ U	45 U	33 U	33 U	33 U	350 U D
Aroclor-1254	--		720 ~~36~~ U	800 ~~40~~ U	45 U	33 U	33 U	33 U	350 U D
Aroclor-1260	--		15000 J	27000 J	45 U	520	500	380	7800 D
Aroclor-1262	--		36 U	40 U	45 U	33 U	33 U	33 U	350 U D
Aroclor-1268	--		36 U	40 U	45 U	33 U	33 U	33 U	350 U D
Total PCBs	25		**15000 J**	**27000 J**	0	**520**	**500**	**380**	**7800 D**

J - Estimated value
U - Indicates that the compound was analyzed for but not detected
V – Qualifier added and/or value altered during validation
P - There is a greater than 25 percent difference for detected concentrations between the two GC columns Aroclor target analyte
D - Compound identified in an analysis at a secondary dilution
µg/kg - Micrograms per kilograms
PCBs - Polychlorinated Biphenyls
Bolded results indicate that the compound exceeds the Site-Specific Cleanup Levels

Table 1. Summary of Polychlorinated Biphenyl Compound Concentrations in Sewer-Sediment Samples Collected in the Primary Sewer System, Sunnyside Yard, Queens, New York

Parameter (Concentrations in µg/kg)	Site-Specific Cleanup Levels	**Sample Designation:**	MHS-38	MHS-38	MH-40	MH-40DUP	MHS-40	MHS-40	MH-42
		Sample Date:	3/16/2011	3/17/2011	10/12/2010	10/12/2010	3/16/2011	3/17/2011	10/12/2010
		Location:	-	-	-	-	-	-	-
Aroclor-1016	--		31 U	35 U	31 U	30 U	33 U	30 U	35 U
Aroclor-1221	--		31 U	35 U	31 U	30 U	33 U	30 U	35 U
Aroclor-1232	--		31 U	35 U	31 U	30 U	33 U	30 U	35 U
Aroclor-1242	--		620 ~~31~~ U	1800 ~~35~~ U	31 U	30 U	33 U	30 U	35 U
Aroclor-1248	--		620 ~~31~~ U	1800 ~~35~~ U	31 U	30 U	33 U	30 U	110
Aroclor-1254	--		620 ~~31~~ U	1800 ~~35~~ U	31 U	30 U	33 U	30 U	35 U
Aroclor-1260	--		30000	83000 J	31 UJV	86 JV	65	130	1300
Aroclor-1262	--		31 U	35 U	31 U	30 U	33 U	30 U	35 U
Aroclor-1268	--		31 U	35 U	31 U	30 U	33 U	30 U	35 U
Total PCBs	25		**30000**	**83000 J**	0	**86**	**65**	**130**	**1410**

J - Estimated value
U - Indicates that the compound was analyzed for but not detected
V – Qualifier added and/or value altered during validation
P - There is a greater than 25 percent difference for detected concentrations between the two GC columns Aroclor target analyte
D - Compound identified in an analysis at a secondary dilution
µg/kg - Micrograms per kilograms
PCBs - Polychlorinated Biphenyls
Bolded results indicate that the compound exceeds the Site-Specific Cleanup Levels

Table 1. Summary of Polychlorinated Biphenyl Compound Concentrations in Sewer-Sediment Samples Collected in the Primary Sewer System, Sunnyside Yard, Queens, New York

Parameter (Concentrations in µg/kg)	Site-Specific Cleanup Levels	**Sample Designation:**	MHS-42	MHS-42	MH-45	MH-45DUP	MHS-45	MHS-45	MH-52
		Sample Date:	3/16/2011	3/17/2011	10/11/2010	10/11/2010	3/16/2011	3/17/2011	10/12/2010
		Location:	-	-	-	-	-	-	-
Aroclor-1016	--		35 U	36 U	32 U	31 U	31 U	38 U	33 U
Aroclor-1221	--		35 U	36 U	32 U	31 U	31 U	38 U	33 U
Aroclor-1232	--		35 U	36 U	32 U	31 U	31 U	38 U	33 U
Aroclor-1242	--		35 U	36 U	32 U	31 U	31 U	38 U	33 U
Aroclor-1248	--		35 U	36 U	150 JV	31 UJV	31 U	38 U	33 U
Aroclor-1254	--		35 U	1100 U	32 U	31 U	31 U	38 U	33 U
Aroclor-1260	--		900	1200 ~~36 U~~ J	1900 JV	370 JV	180	600	540
Aroclor-1262	--		35 U	36 U	32 U	31 U	31 U UJ	38 U	33 U
Aroclor-1268	--		35 U	36 U	32 U	31 U	31 U UJ	38 U	33 U
Total PCBs	25		**900**	~~**1100**~~ 1200 J	**2050**	**370**	**180**	**600**	**540**

J - Estimated value

U - Indicates that the compound was analyzed for but not detected

V – Qualifier added and/or value altered during validation

P - There is a greater than 25 percent difference for detected concentrations between the two GC columns Aroclor target analyte

D - Compound identified in an analysis at a secondary dilution

µg/kg - Micrograms per kilograms

PCBs - Polychlorinated Biphenyls

Bolded results indicate that the compound exceeds the Site-Specific Cleanup Levels

Table 1. Summary of Polychlorinated Biphenyl Compound Concentrations in Sewer-Sediment Samples Collected in the Primary Sewer System, Sunnyside Yard, Queens, New York

Parameter (Concentrations in µg/kg)	Site-Specific Cleanup Levels	**Sample Designation:**	MHS-52	MHS-52	MH-69	MHS-69	MHS-69
		Sample Date:	3/16/2011	3/17/2011	10/12/2010	3/16/2011	3/17/2011
		Location:	-	-	-	-	-
Aroclor-1016	--		31 U	33 U	32 U	29 U	30 U
Aroclor-1221	--		31 U	33 U	32 U	29 U	30 U
Aroclor-1232	--		31 U	33 U	32 U	29 U	30 U
Aroclor-1242	--		31 U	33 U	32 U	29 U	30 U
Aroclor-1248	--		31 U	33 U	32 U	29 U	30 U
Aroclor-1254	--		31 U	33 U	32 U	29 U	30 U
Aroclor-1260	--		340	310	72	53	76
Aroclor-1262	--		31 U	33 U	32 U	29 U	30 U
Aroclor-1268	--		31 U	33 U	32 U	29 U	30 U
Total PCBs	25		**340**	**310**	**72**	**53**	**76**

J - Estimated value
U - Indicates that the compound was analyzed for but not detected
V – Qualifier added and/or value altered during validation
P - There is a greater than 25 percent difference for detected concentrations between the two GC columns Aroclor target analyte
D - Compound identified in an analysis at a secondary dilution
µg/kg - Micrograms per kilograms
PCBs - Polychlorinated Biphenyls
Bolded results indicate that the compound exceeds the Site-Specific Cleanup Levels

PLATES

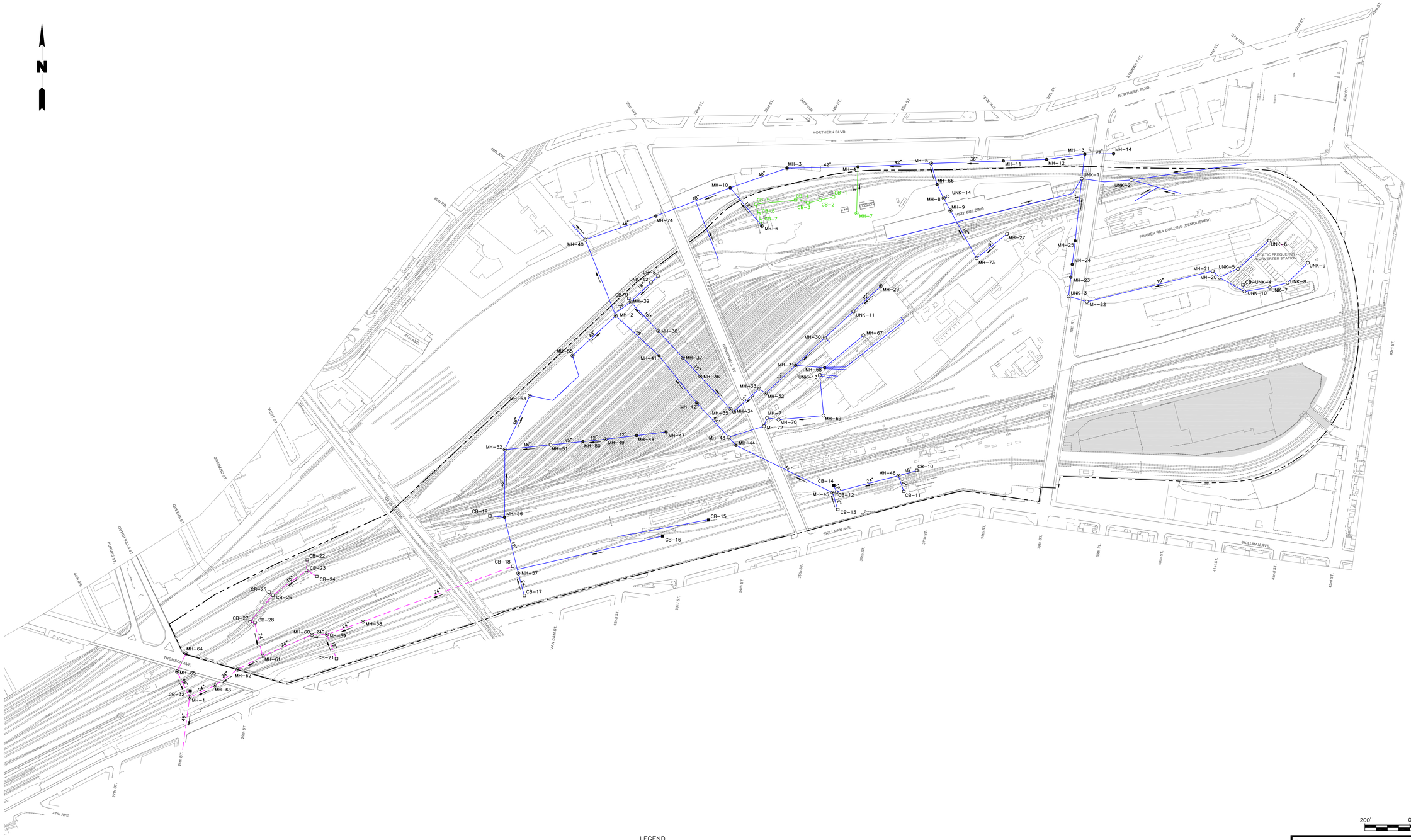

LEGEND

	PRIMARY SEWER SYSTEM (COMBINED SEWER SYSTEM)	MH-2	LOCATION AND DESIGNATION OF SEWER MANHOLE WITH GRATE COVER
	SECONDARY SEWER SYSTEM (STORM SEWER SYSTEM)	MH-5	LOCATION AND DESIGNATION OF SEWER MANHOLE WITH SOLID COVER
	REMOVED OR INOPERABLE SECTIONS OF SEWER SYSTEM	MH-66	LOCATION AND DESIGNATION OF SEWER MANHOLE NOT LOCATED OR COMPLETELY BURIED
	APPROXIMATE PROPERTY BOUNDARY	CB-18	LOCATION AND DESIGNATION OF CATCH BASIN
	PRIVATE PROPERTY NOT OWNED BY AMTRAK	CB-14	LOCATION AND DESIGNATION OF CATCH BASIN NOT LOCATED OR COMPETELY BURIED
UNK-10	MANHOLE LOCATED IN THE FIELD BUT NOT SHOWN IN AVAILABLE SEWER MAPS	48"	DIAMETER OF SEWER PIPE (INCHES) DIRECTION OF SEWER FLOW

Title:

SEWER SYSTEM BASEMAP

OPERABLE UNIT 5 REMEDIAL INVESTIGATION REPORT
SUNNYSIDE YARD, QUEENS, NEW YORK

Prepared For:

AMTRAK

ROUX
ROUX ASSOCIATES, INC.
Environmental Consulting and Management

Compiled by: L.O.	Date: 12AUG11		PLATE
Prepared by: J.A.D.	Scale: AS SHOWN		1
Project Mgr: H.G.	Project: 0055.0050Y005		
File: 0055.0050Y122.03.DWG			

V:\CAD\PROJECTS\0055Y\0050Y\122\0055.0050Y122.03.DWG

Designation	MHW-3	MHW-3	MHWF-3	MHW-3	MHWF-3	MHW-3	MHWF-3	MHW-3	MHWF-3
Date	2/8/93	7/26/96	7/26/96	10/11/10	10/11/10	3/16/11	3/16/11	3/17/11	3/17/11
Total PCBs	ND	0.89	0.017	0.18 JV	ND	ND	ND	2.8	1.8

Designation	MHS-3	MH-3	MHS-3	MHS-3
Date	2/8/93	11/13/96	3/11/97	10/11/10
Total PCBs	54000	32500	1380	ND

Designation	MHS-6	MHS-6	MHS-6
Date	10/11/10	3/16/11	3/17/11
Total PCBs	120000 D	21000	15000 JV

Designation	CB-4
Date	11/2/96
Total PCBs	7390

Designation	MHW-6	MHW-6	MHW-6	MHWF-6	MHW-6	MHWF-6	MHW-6	MHWF-6
Date	2/8/93	7/26/96	10/11/10	10/11/10	3/16/11	3/16/11	3/17/11	3/17/11
Total PCBs	ND	0.015	83 D	ND	12	ND	16 JV	ND

Designation	MHW-40 (4x8)S	MHW-40 (48)E	MHWF-40 (48)E	MHW-40	MHWF-40	MHW-40	MHWF-40	MHW-40	MHWF-40	MHW-40	MHWF-40
Date	4/25/94	4/25/94	4/25/94	7/26/96	7/26/96	10/12/10	10/12/10	3/16/11	3/16/11	3/17/11	3/17/11
Total PCBs	ND	0.51	ND	0.62	0.015	2.1	ND	ND	ND	ND	ND

Designation	MHS-40 (4x8)S	MHS-40 (48)E	MHS-40	MH-40	MHS-40	MHS-40	MHS-40
Date	4/25/94	4/25/94	7/26/96	11/13/96	10/12/10	3/16/11	3/17/11
Total PCBs	15100	16200	148900	160000	ND	65	130

Designation	MHW-39	MHW-39 (24)S
Date	4/26/94	4/26/94
Total PCBs	0.20	ND

Designation	MHW-2	MHW-2 (4x8)N	MHWF-2 (4x8)N	MHW-2	MHWF-2	MHW-2 FROM MH-41	MHWF-2 FROM MH-41	MHW-2 FROM MH-55	MHWF-2 FROM MH-55
Date	2/9/93	4/26/94	4/26/94	7/26/96	7/26/96	10/12/10	10/12/10	10/12/10	10/12/10
Total PCBs	2.3	0.66	ND	0.224	0.1	0.26	ND	0.22 JV	ND

Designation	MHW-2 FROM MH-41	MHWF-2 FROM MH-41	MHW-2 FROM MH-55	MHWF-2 FROM MH-55	MHW-2 FROM MH-41	MHWF-2 FROM MH-41	MHW-2 FROM MH-55	MHWF-2 FROM MH-55
Date	3/16/11	3/16/11	3/16/11	3/16/11	3/17/11	3/17/11	3/17/11	3/17/11
Total PCBs	0.84	ND	0.72	ND	ND	ND	ND	ND

Designation	MHS-2	MHS-2	MHS-2 DL	MH-2	MHS-2 FROM MH-41	MHS-2 FROM MH-55	MHS-2FROM MH-41	MHS-2 FROM MH-55	MHS-2 FROM MH-41	MHS-2 FROM MH-55
Date	2/9/93	4/26/94	7/26/96	11/12/96	10/12/10	10/12/10	3/16/11	3/16/11	3/17/11	3/17/11
Total PCBs	82000	11900	54100	8760	1800	510	1200	2600 JV	920	1100

Designation	MHS-38	MHS-38	MHS-38
Date	10/12/10	3/16/11	3/17/11
Total PCBs	7800 D	30000	83000 JV

Designation	MHW-38	MHWF-38	MHW-38	MHWF-38	MHW-38	MHWF-38
Date	10/12/10	10/12/10	3/16/11	3/16/11	3/17/11	3/17/11
Total PCBs	ND	ND	0.92	ND	ND	ND

Designation	MHS-55	MH-55
Date	4/26/94	11/12/96
Total PCBs	25000	4300

Designation	MHS-52	MH-52	MHS-52	MHS-52	MHS-52	MHS-52
Date	4/26/94	11/12/96	3/11/97	10/12/10	3/16/11	3/17/11
Total PCBs	2900	8600	91100	540	340	310

Designation	MHW-52 (10)N	MHW-52 (18)SE	MHW-52 (42)SW	MHWF-52 (42)SW	MHW-52	MHW-52	MHWF-52	MHW-52	MHWF-52	MHW-52	MHWF-52
Date	4/26/94	4/26/94	4/26/94	4/26/94	7/26/96	10/12/10	10/12/10	3/16/11	3/16/11	3/17/11	3/17/11
Total PCBs	ND	ND	ND	ND	0.29	0.14 JV	ND	0.59	ND	ND	ND

Designation	MHW-51	MHWF-51	MHW-51	MHWF-51	MHW-51	MHWF-51
Date	10/12/10	10/12/10	3/16/11	3/16/11	3/17/11	3/17/11
Total PCBs	ND	ND	ND	ND	ND	ND

Designation	MHW-7
Date	2/8/93
Total PCBs	14.8

Designation	MH-5
Date	11/13/96
Total PCBs	18800

Designation	MHW-5	MHW-5
Date	2/8/93	7/26/96
Total PCBs	ND	0.077

Designation	MHW-8	MHW-8	MHWF-8	MHW-8	MHWF-8	MHW-8	MHWF-8
Date	2/9/93	10/11/10	10/11/10	3/16/11	3/16/11	3/17/11	3/17/11
Total PCBs	20.6	ND	ND	ND	ND	ND	ND

Designation	MH-11	MH-11	MHS-11	MHS-11
Date	3/11/97	10/11/10	3/16/11	3/17/11
Total PCBs	1000	520	500	380

Designation	MHW-11	MHWF-11	MHW-11	MHWF-11	MHW-11	MHWF-11
Date	10/11/10	10/11/10	3/16/11	3/16/11	3/17/11	3/17/11
Total PCBs	ND	ND	0.98	ND	ND	ND

Designation	MHS-8 DL	MH-8	MHS-8
Date	2/9/93	11/12/96	3/16/11
Total PCBs	4200	140	ND

Designation	MHS-29
Date	4/27/94
Total PCBs	170

Designation	MHW-29
Date	4/27/94
Total PCBs	ND

Designation	MH-69	MHW-69	MHWF-69	MHW-69	MHWF-69	MHW-69	MHWF-69
Date	4/28/94	10/12/10	10/12/10	3/16/11	3/16/11	3/17/11	3/17/11
Total PCBs	4.4	ND	ND	ND	ND	ND	ND

Designation	MHS-69 (18)NE	MHS-69 (36)E	MH-69	MHS-69	MHS-69	MHS-69
Date	4/28/94	4/28/94	11/12/96	10/12/10	3/16/11	3/17/11
Total PCBs	4700	29000	145	72	53	76

Designation	MHW-45	MHWF-45	MHW-45	MHWF-45	MHW-45	MHWF-45
Date	10/11/10	10/11/10	3/16/11	3/16/11	3/17/11	3/17/11
Total PCBs	0.23 JV	ND	0.3	ND	ND	ND

Designation	MHW-43
Date	4/27/94
Total PCBs	ND

Designation	MHS-35
Date	4/28/94
Total PCBs	950

Designation	MHS-45	MHS-45	MHS-45	MHS-45
Date	4/28/94	10/11/10	3/16/11	3/17/11
Total PCBs	1503	2050 JV	180	600

Designation	MHW-42	MHW-42	MHWF-42	MHW-42	MHWF-42	MHW-42	MHWF-42
Date	7/26/96	10/12/10	10/12/10	3/16/11	3/16/11	3/17/11	3/17/11
Total PCBs	0.91	0.24 JV	ND	1	ND	ND	ND

Designation	MHW-37
Date	7/26/96
Total PCBs	0.14

Designation	MHS-37	MH-37
Date	4/28/94	11/12/96
Total PCBs	9400	38000

Designation	MHS-42	MHS-42 DL	MH-42	MHS-42	MHS-42	MHS-42
Date	4/26/94	8/15/96	11/12/96	10/12/10	3/16/11	3/17/11
Total PCBs	51000	2610	5400	1410	900	1200 JV

LEGEND

- PRIMARY SEWER SYSTEM (COMBINED SEWER SYSTEM)
- SECONDARY SEWER SYSTEM (STORM SEWER SYSTEM)
- REMOVED OR INOPERABLE SECTIONS OF SEWER SYSTEM
- APPROXIMATE PROPERTY BOUNDARY
- PRIVATE PROPERTY NOT OWNED BY AMTRAK
- UNK–10 MANHOLE LOCATED IN THE FIELD BUT NOT SHOWN IN AVAILABLE SEWER MAPS
- MH–2 LOCATION AND DESIGNATION OF SEWER MANHOLE WITH GRATE COVER
- MH–5 LOCATION AND DESIGNATION OF SEWER MANHOLE WITH SOLID COVER
- MH–66 LOCATION AND DESIGNATION OF SEWER MANHOLE NOT LOCATED OR COMPLETELY BURIED
- CB–18 LOCATION AND DESIGNATION OF CATCH BASIN
- CB–14 LOCATION AND DESIGNATION OF CATCH BASIN NOT LOCATED OR COMPETELY BURIED
- 48" DIAMETER OF SEWER PIPE (INCHES) DIRECTION OF SEWER FLOW

SEWER SEDIMENT

Designation	MHS-1
Date	4/28/94
Total PCBs	3500

← TOTAL CONCENTRATION MICROGRAMS PER KILOGRAM (µg/kg)

SEWER WATER

Designation	MHW-7
Date	2/8/93
Total PCBs	14.8

← TOTAL CONCENTRATION MICROGRAMS PER LITER (µg/L)

NOTES

1. IF SUFFICIENT QUANTITIES OF SEWER WATER AND/OR SEWER SEDIMENT WERE NOT PRESENT IN THE INFLUENT PIPES AT MULTIPLE INFLUENT SAMPLING LOCATIONS, BUT SEWER WATER AND/OR SEWER SEDIMENT WAS PRESENT IN THE MANHOLE, THEN THE SAMPLE WAS COLLECTED FROM THE MANHOLE BOTTOM AND THE SAMPLE DESIGNATION DOESN'T INDICATE A SAMPLING LOCATION.
2. DESIGNATIONS WITH THE LETTER "F" INDICATE A FILTERED SAMPLE.
3. DESIGNATIONS WITH THE LETTER "W" INDICATE A SEWER WATER SAMPLE.
4. DESIGNATIONS WITH THE LETTER "S" INDICATE A SEWER SEDIMENT SAMPLE.
5. DESIGNATIONS WITH THE PREFIX "DL" INDICATE A DILUTED SEWER SEDIMENT SAMPLE.
6. THE LETTER "J" INDICATES AN ESTIMATED VALUE
7. THE LETTER "V" INDICATES QUALIFIER ADDED AND/OR VALVE ALTERED DURING VALIDATION
8. THE LETTER "D" INDICATES A COMPOUND IDENTIFIED IN AN ANALYSIS AT A SECONDARY DILUTION
9. ND – PCB'S NOT DETECTED

200' 0 200'

Title:

SUMMARY OF TOTAL PCBs IN SEWER WATER AND SEDIMENT SAMPLES

OPERABLE UNIT 5 REMEDIAL INVESTIGATION REPORT
SUNNYSIDE YARD, QUEENS, NEW YORK

Prepared For:

AMTRAK

ROUX ASSOCIATES, INC.
Environmental Consulting and Management

Compiled by: L.O.	Date: 12AUG11	PLATE
Prepared by: J.A.D.	Scale: AS SHOWN	2
Project Mgr: H.G.	Project: 0055.0050Y005	
File: 0055.0050Y122.04.DWG		

V:\CAD\PROJECTS\0055Y\0050Y\122\0055.0050Y122.04.DWG

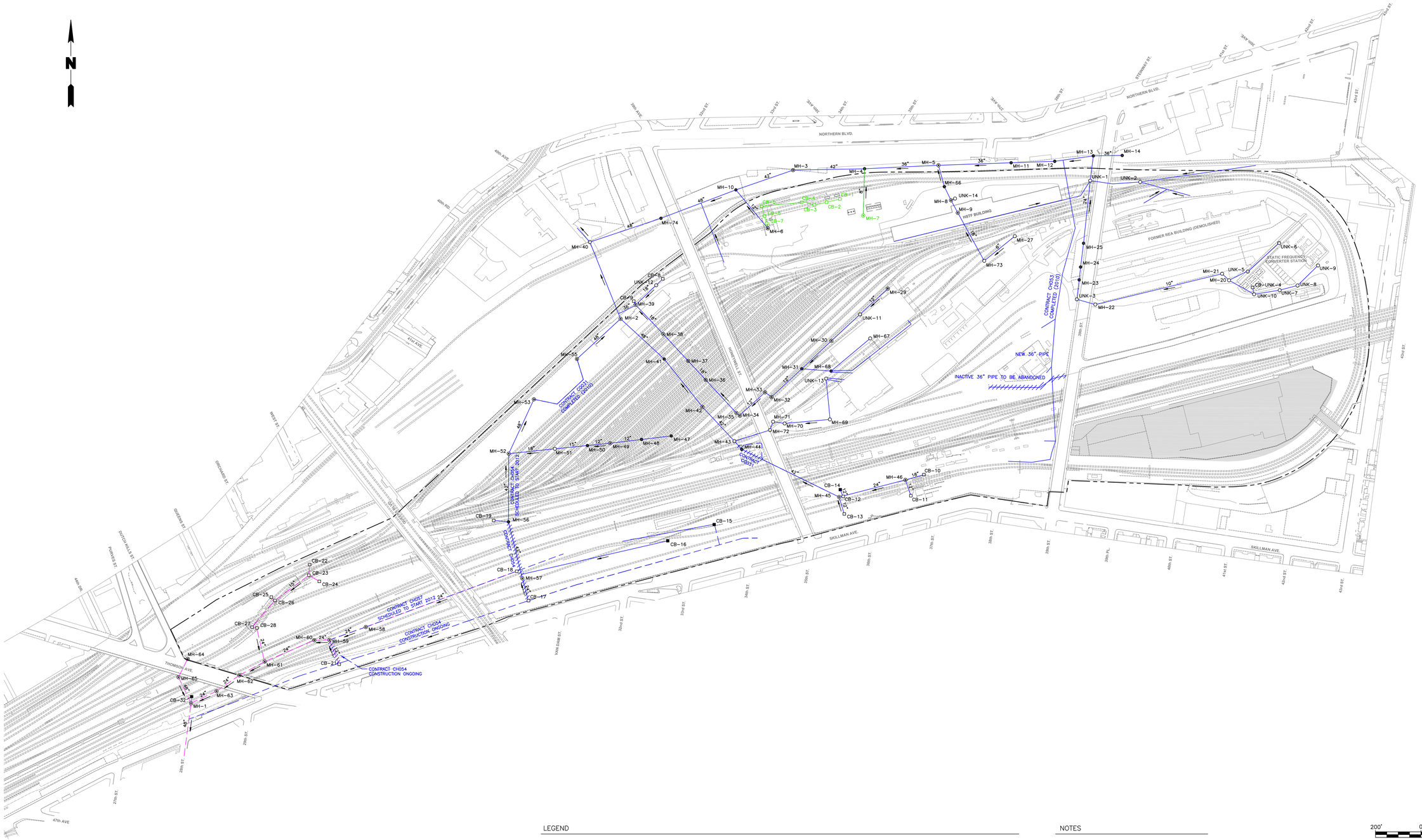

LEGEND

- PRIMARY SEWER SYSTEM (COMBINED SEWER SYSTEM)
- SECONDARY SEWER SYSTEM (STORM SEWER SYSTEM)
- APPROXIMATE PROPERTY BOUNDARY
- PROPOSED ESA MODIFICATIONS
- REMOVED OR IMPERMEABLE SECTIONS OF SEWER SYSTEM
- PIPE TO BE ABANDONED OR REMOVED AS PART OF ESA MODIFICATIONS
- PRIVATE PROPERTY NOT OWNED BY AMTRAK
- MH-2 — LOCATION AND DESIGNATION OF SEWER MANHOLE WITH GRATE COVER
- MH-5 — LOCATION AND DESIGNATION OF SEWER MANHOLE WITH SOLID COVER
- MH-66 — LOCATION AND DESIGNATION OF SEWER MANHOLE NOT LOCATED OR COMPLETELY BURIED
- CB-18 — LOCATION AND DESIGNATION OF CATCH BASIN
- CB-14 — LOCATION AND DESIGNATION OF CATCH BASIN NOT LOCATED OR COMPETELY BURIED
- UNK-10 — MANHOLE LOCATED IN THE FIELD BUT NOT SHOWN IN AVAILABLE SEWER MAPS
- 48" — DIAMETER OF SEWER PIPE (INCHES) AND DIRECTION OF FLOW

NOTES

SEWER MODIFICATIONS PRESENTED ON THIS DRAWING ARE BASED ON INFORMATION PROVIDED BY MTA. PROPOSED MODIFICATIONS ARE SUBJECT TO CHANGE.

MTA ESA – METROPOLITAN TRANSIT AUTHORITY EAST SIDE ACCESS PROJECT

200' 0 200'

Title:

ESA SEWER MODIFICATIONS AS OF AUGUST 2011

OPERABLE UNIT 5 REMEDIAL INVESTIGATION REPORT
SUNNYSIDE YARD, QUEENS, NEW YORK

Prepared For:

AMTRAK

ROUX
ROUX ASSOCIATES, INC.
Environmental Consulting and Management

Compiled by: R.M.	Date: 12AUG11	PLATE
Prepared by: J.A.D.	Scale: AS SHOWN	3
Project Mgr: H.G.	Project: 0055.0050Y005	
File: 0055.0050Y122.05.DWG		

V:\CAD\PROJECTS\0055\Y0050\122\0055.0050Y122.05.DWG

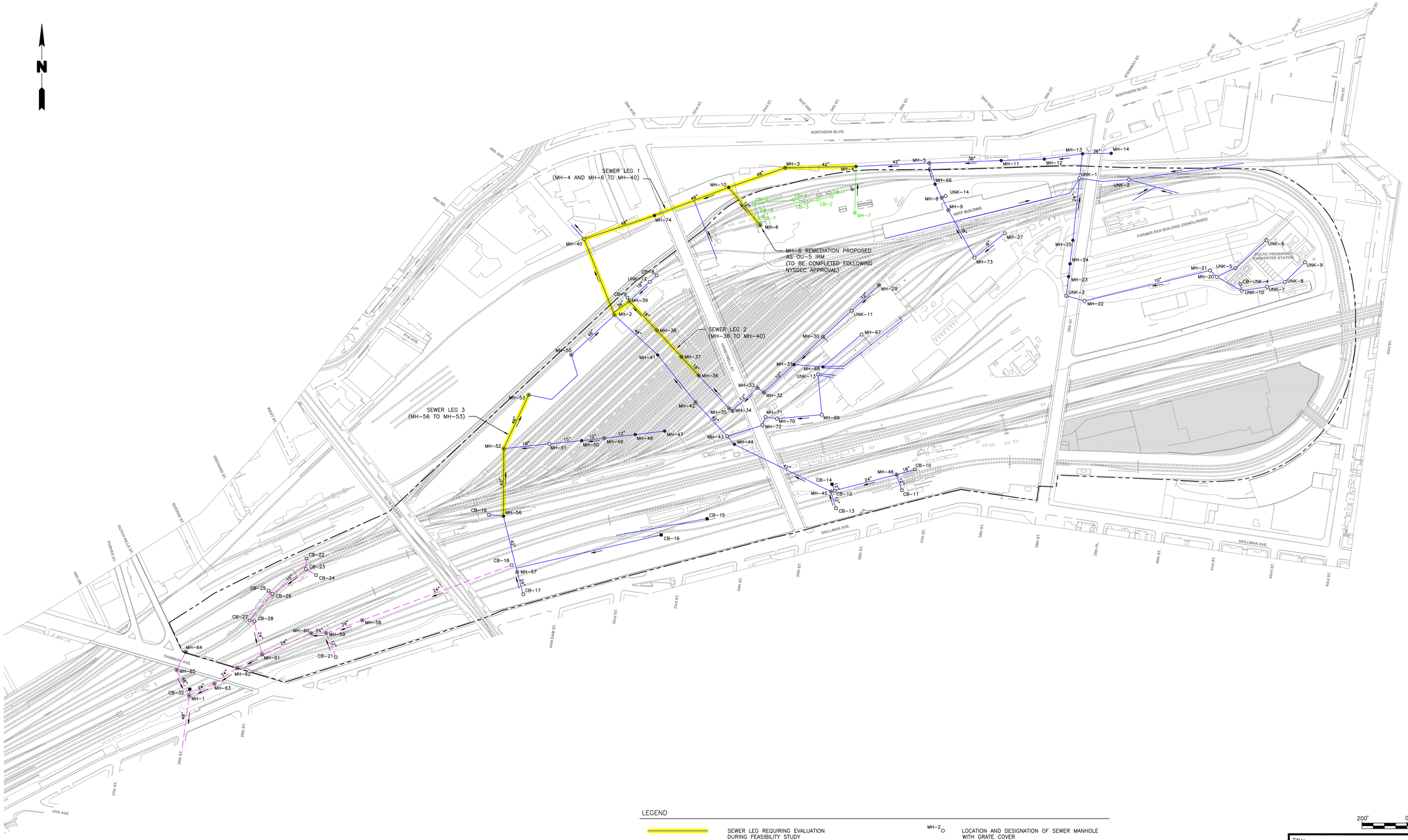

LEGEND

	SEWER LEG REQUIRING EVALUATION DURING FEASIBILITY STUDY
	PRIMARY SEWER SYSTEM (COMBINED SEWER SYSTEM)
	SECONDARY SEWER SYSTEM (STORM SEWER SYSTEM)
	REMOVED OR INOPERABLE SECTIONS OF SEWER SYSTEM
	APPROXIMATE PROPERTY BOUNDARY
	PRIVATE PROPERTY NOT OWNED BY AMTRAK
UNK-10	MANHOLE LOCATED IN THE FIELD BUT NOT SHOWN IN AVAILABLE SEWER MAPS
MH-2	LOCATION AND DESIGNATION OF SEWER MANHOLE WITH GRATE COVER
MH-5	LOCATION AND DESIGNATION OF SEWER MANHOLE WITH SOLID COVER
MH-66	LOCATION AND DESIGNATION OF SEWER MANHOLE NOT LOCATED OR COMPLETELY BURIED
CB-18	LOCATION AND DESIGNATION OF CATCH BASIN
CB-14	LOCATION AND DESIGNATION OF CATCH BASIN NOT LOCATED OR COMPETELY BURIED
48"	DIAMETER OF SEWER PIPE (INCHES) DIRECTION OF SEWER FLOW

Title:

PORTIONS OF SEWER SYSTEM REQUIRING EVALUATION DURING FEASIBILITY STUDY

OPERABLE UNIT 5 REMEDIAL INVESTIGATION REPORT
SUNNYSIDE YARD, QUEENS, NEW YORK

Prepared For:

AMTRAK

ROUX
ROUX ASSOCIATES, INC.
Environmental Consulting and Management

Compiled by: L.O.	Date: 24AUG11	PLATE
Prepared by: J.A.D.	Scale: AS SHOWN	
Project Mgr: H.G.	Project: 0055.0050Y005	4
File: 0055.0050Y122.06.DWG		

V:\CAD\PROJECTS\0055Y\0050Y\122\0055.0050Y122.06.DWG

December 1, 2011

OPERABLE UNIT 5
FEASIBILITY STUDY

Sunnyside Yard
Queens, New York

Prepared for:

NATIONAL RAILROAD PASSENGER CORPORATION
Washington, D.C. 20002

Remedial Engineering, P.C.
Environmental Engineers

and ROUX ASSOCIATES, INC.

209 Shafter Street, Islandia, New York 11749 ♦ 631-232-2600

TABLE OF CONTENTS

CERTIFICATION iii

ACRONYM AND UNIT DEFINITIONS iv

1.0 INTRODUCTION 1
- 1.1 Enforcement Status 1
- 1.2 Yard Operating History 2
- 1.3 General Yard Description 3
- 1.4 OU-5 Description 3
- 1.5 Conceptual Site Model 4
- 1.6 Objective and Organization of the Feasibility Study 6

2.0 SUMMARY OF REMEDIAL INVESTIGATION 7
- 2.1 Previous Investigations 7
- 2.2 Interim Remedial Measures 9
- 2.3 Exposure Assessment 10
- 2.4 Nature and Extent of Contamination 10
  - 2.4.1 PCBs in Sewer Sediment 10
  - 2.4.2 PCBs in Sewer Water 11
  - 2.4.3 Summary of Sewer Manholes of Concern 11

3.0 REMEDIAL GOALS AND REMEDIAL ACTION OBJECTIVES 12
- 3.1 Identification of SCGs 12
  - 3.1.1 Chemical-Specific SCGs 13
- 3.2 Remedial Action Objectives for OU-5 14
- 3.3 General Response Actions 14

4.0 IDENTIFICATION AND SCREENING OF TECHNOLOGIES 16
- 4.1 Technology Screening 17
  - 4.1.1 Access/Use Restrictions 17
  - 4.1.2 Sampling/Monitoring 18
  - 4.1.3 Hydraulic (Jetting) Removal Method 19
  - 4.1.4 Mechanical Removal Methods 20

5.0 DESCRIPTION AND EVALUATION OF REMEDIAL ALTERNATIVES 22
- 5.1 Remedial Alternative 1: No Further Action 23
  - 5.1.1 Overall Protection of Human Health and the Environment 23
  - 5.1.2 Compliance with SCGs 24
  - 5.1.3 Long-Term Effectiveness and Permanence 24
  - 5.1.4 Reduction of Toxicity, Mobility, or Volume 24
  - 5.1.5 Short-Term Impact and Effectiveness 24
  - 5.1.6 Implementability 24
  - 5.1.7 Cost 25
- 5.2 Remedial Alternative 2: Sewer System Monitoring and Deferred Cleanout of Sewer Manholes MH-38 and MH-40 (Post OU-3 and OU-4 Remediation and ESA Construction) 25
  - 5.2.1 Overall Protection of Human Health and the Environment 26
  - 5.2.2 Compliance with SCGs 27

TABLE OF CONTENTS

(Continued)

5.2.3 Long Term Effectiveness and Permanence 27
5.2.4 Reduction of Toxicity, Mobility, or Volume 27
5.2.5 Short-Term Effectiveness 28
5.2.6 Implementability 28
5.2.7 Cost 29
5.3 Remedial Alternative 3: Cleaning of MH-38 and MH-40 and Sewer System Monitoring 29
5.3.1 Overall Protection of Human Health and the Environment 31
5.3.2 Compliance with SCGs 31
5.3.3 Long Term Effectiveness and Permanence 31
5.3.4 Reduction of Toxicity, Mobility, or Volume 32
5.3.5 Short-Term Impacts and Effectiveness 32
5.3.6 Implementability 32
5.3.7 Cost 33
5.4 Comparison of Remedial Alternatives 33

6.0 RECOMMENDED REMEDIAL ACTION ALTERNATIVE 35

7.0 REFERENCES 36

TABLE

1. Action and Chemical-Specific SCGs

FIGURES

1. Site Location Map
2. Amtrak Sunnyside Yard Layout
3. MH-38 Detail
4. MH-40 Detail

APPENDICES

A. Remedial Alternative Cost Estimation Tables
B. Data Summary Tables for Polychlorinated Biphenyls in Sewer Sediment and Sewer Water from Samples Collected Within the Primary and Secondary Sewer Systems

PLATE

1. Sewer System Requiring Remediation

CERTIFICATION

I Charles J. McGuckin certify that I am currently a NYS registered professional engineer and that this Feasibility Study (FS) Report was prepared in accordance with all applicable statutes and regulations and in substantial conformance with the DER Technical Guidance for Site Investigation and Remediation (DER-10) and that all activities were performed in full accordance with the DER-approved work plan and any DER-approved modifications.

Charles J. McGuckin, P.E. NYS Professional Engineer #069509	12/1/11 Date	Signature

ACRONYM AND UNIT DEFINITIONS

AMTRAK ..... National Railroad Passenger Corporation
Area ..... Area of Concern
bls ..... Below land surface
CAMP ..... Community Air Monitoring Plan
CERCLA ..... Comprehensive Environmental Response, Compensation and Liability Act
CFR ..... Code of Federal Regulations
COCs ..... Compounds of Concern
Conrail ..... Consolidated Rail Corporation
cPAH ..... Seven specific PAHs that the NYSDEC considers carcinogenic
CY ..... Cubic Yards
DER ..... Division of Environmental Remediation
EA ..... Exposure Assessment
ESA ..... East Side Access
FS ..... Feasibility Study
FT ..... Feet
GRA ..... General Response Action
HSTF ..... High Speed Trainset Facility
IHWDS ..... Inactive Hazardous Waste Disposal Site
IRM ..... Interim remedial measures
LIRR ..... Long Island Rail Road
mg/kg ..... Milligrams per kilogram, equal to 1,000 µg/kg
MTA ..... Metropolitan Transit Authority
NCP ..... National Contingency Plan
NJTC ..... New Jersey Transit Corporation
NYCRR ..... New York Code of Rules and Regulations
NYCDEP ..... New York City Department of Environmental Protection
NYCDOT ..... New York City Department of Transportation
NYSDEC ..... New York State Department of Environmental Conservation
NYSDOH ..... New York State Department of Health
OOC ..... Order On Consent

ACRONYM AND UNIT DEFINITIONS

OM&M	Operation, Maintenance and Monitoring
OU	Operable Unit
PAHs	Polycyclic aromatic hydrocarbons
PCBs	Polychlorinated biphenyls
PPE	Personal protective equipment
ppm	Parts per million, equivalent to mg/kg
RAOs	Remedial Action Objectives
RCRA	Resource Conservation and Recovery Act
RI	Remedial Investigation
ROD	Record of Decision
RSCOs	Recommended Soil Cleanup Objectives
S&I	Service and Inspection
SCGs	Standards, Criteria and Guidance
SPH	Separate-Phase Petroleum Hydrocarbon
SVOCs	Semivolatile Organic Compounds
TCLP	Toxicity Characteristic Leaching Procedure
TSCA	Toxic Substance Control Act
USEPA	United States Environmental Protection Agency
VOCs	Volatile Organic Compounds
Yard	Sunnyside Yard, Queens, New York

1.0 INTRODUCTION

On behalf of the National Railroad Passenger Corporation (Amtrak) and the New Jersey Transit Corporation (NJTC), Roux Associates, Inc. (Roux Associates) and Remedial Engineering, P.C. (Remedial Engineering) have prepared this Feasibility Study (FS) for Operable Unit 5 (OU-5) of the Amtrak Sunnyside Yard (Yard) located at 39-29 Honeywell Street, Sunnyside, New York. OU-5 is defined as the sewer system that services the Yard. The purpose of performing an FS was to identify, evaluate, and select an appropriate remedial action alternative for addressing contamination in OU-5. The location of the Yard is shown on Figure 1. The location of OU-5 within the Yard and previously identified Areas of Concern are shown on Figure 2.

1.1 Enforcement Status

The Yard is listed as a Class II Inactive Hazardous Waste Site. This FS report was prepared in accordance with the provisions of the Order on Consent (OOC), Index #W2-0081-08-10, between the New York State Department of Environmental Conservation (NYSDEC), Amtrak, and the NJTC.

In 1997, the Yard was subdivided into six operable units with the NYSDEC's concurrence, to accommodate a rigid construction schedule for Amtrak's High Speed Trainset Facility (HSTF) program and still address site-wide remedial efforts in a timely and orderly manner (Figure 2). The operable units (OUs) are described as follows:

- OU-1: Soil above the water table within the footprint of the HSTF S&I Building. A Record of Decision (ROD) was issued for OU-1 in August 1997, and the remedial work was completed in April 1998.
- OU-2: Soil above the water table within the footprint of the HSTF S&I Building ancillary structures. A No Further Action ROD was issued for OU-2 in November 1997.
- OU-3: Soil and separate phase petroleum hydrocarbon (SPH) accumulation above the water table and soil below the water table within 8 acres in the north central portion of the Yard. A ROD was issued for OU-3 in March 2007. Remediation is ongoing.
- OU-4: Consists of the soil above the water table (unsaturated zone) at the Yard, excluding the areas defined as OU-1, OU-2, and OU-3. OU-4 comprises 120 of the total 133 acres of the Yard. A ROD was issued for OU-4 in March 2009. Remediation is ongoing.

- OU-5: Sewer system (water and sediment) beneath the Yard.
- OU-6: Saturated soil (excluding beneath OU-3), groundwater, and soil vapor beneath the Yard. A No Action ROD was issued for OU-6 in March 2010.

In February 1997, the NYSDEC and the New York State Department of Health (NYSDOH) issued cleanup levels for the compounds of concern (COCs) at the Yard: total PCBs, total carcinogenic polycyclic aromatic hydrocarbons (cPAHs), and lead. The seven cPAHs that are collectively identified as a COC and considered to be carcinogenic by the NYSDEC are benzo(a)anthracene, benzo(a)pyrene, benzo(b)fluoranthene, benzo(k)fluoranthene, chrysene, dibenzo(a,h)anthracene, indeno(1,2,3-cd)pyrene. The NYSDEC-recommended soil cleanup levels for the Yard COCs were re-established in the OU-4 ROD (March 2009) and are as follows:

- Total PCBs: 25 milligrams per kilogram (mg/kg).
- Total SVOCs: 500 mg/kg. In addition, a one foot thick clean cover or ballast will be established and/or maintained over areas known to contain cPAHs at concentrations greater than 25 mg/kg and are not presently covered by buildings, tracks, or pavement.
- Lead: 3,900 mg/kg.

For data comparison purposes, OU-5 sewer water samples have been compared to the New York City Department of Environmental Protection (NYCDEP) Limitations for Effluent to Sanitary or Combined Sewers criteria (NYCDEP Effluent Limits). The NYCDEP Effluent Limit for PCBs is 1 microgram per liter (µg/L).

1.2 Yard Operating History

The Pennsylvania Tunnel and Terminal Company, a subsidiary of the Pennsylvania Railroad (later known as the Penn Central Transportation Company), originally constructed the Yard in the early 1900s. The Yard officially opened on November 27, 1910. On April 1, 1976, the Consolidated Rail Corporation (Conrail) acquired the Yard and the same day conveyed it to Amtrak, which has continued to operate it as a storage and maintenance facility for railroad rolling stock and currently functions primarily as a train maintenance and layover storage facility for electric and diesel locomotives and railroad cars for Amtrak and NJTC. The Metropolitan Transportation Authority (MTA) /Long Island Rail Road (LIRR) own a portion of the Yard along

the northern boundary (including portions of OU-3 and OU-5) and maintains rights of way through the Yard.

1.3 General Yard Description

The Yard is located in Queens County, New York and is identified as Block 214 and Lots 1 and 68 on the New York City Tax Map. The Yard is situated on a 133-acre area bounded by the MTA/LIRR property to the north (including portions of OU-3 and OU-5), Skillman Avenue to the south, light industrial and commercial properties and 42nd Place to the east, and Thompson Avenue to the west.

A significant portion of the construction of the MTA East Side Access (ESA) Project, a very large, multi-year construction project to support MTA/LIRR ridership, is underway in and beneath the Yard, including the construction of multiple train tunnels beneath the Yard. The ESA Project also includes significant, widespread modifications throughout the sewer system beneath the Yard. Much of this work may impact OU-5 and the Remedial Alternatives to be evaluated in this FS. Based on current MTA estimates, construction associated with the ESA project (and therefore its impacts to OU-5 and the Yard as a whole) are anticipated to continue through 2016.

1.4 OU-5 Description

OU-5 consists of the following two separate subsystems:

1. *Primary Combined Sewer* – located in the main section of the Yard, serves facilities including the commissary area, engine house, and the body tracks and discharges into the NYCDEP combined sewer system, then ultimately to the Bowery Bay Wastewater Treatment Plant. Sources of dry weather influent to the primary sewer system include sanitary discharges, washwater from the periodic operation of the Car Washer, and groundwater infiltration. Additional influent to the primary sewer system during wet weather conditions is received from surface drainage and track drains.

2. *Secondary Sewer System* – a storm sewer system that serves the western section of the Yard and discharges into the NYCDEP sewer system along 28th Street and ultimately discharges into Dutch Kills. The secondary sewer system receives stormwater via surface

drainage. The secondary sewer system also receives groundwater infiltration during dry weather conditions.

A Site Plan depicting the layout of both the primary and secondary sewer systems at the Yard is presented in Plate 1. Appendix B presents summary tables of all sewer sediment and sewer water PCB analytical results generated during previous investigation, both from within the primary and secondary systems.

1.5 Conceptual Site Model

Remedial investigations (RIs) performed in OU-3, OU-4, and OU-5 have determined that PCBs are the primary contaminant of concern at the Yard and the potential sources of PCB contamination are in locations that would impact the primary sewer system. RI data have identified the following:

- The primary sewer system is partially located beneath OU-3, and historically PCBs were the primary COC found in OU-3 (i.e., historically the PCB-containing mobile SPH plume and surface runoff could have impacted the primary sewer system).
- In OU-4, there is only one exceedance of the Yard soil cleanup level for lead, no cPAH/SVOC exceedances, and seven PCB soil hot spots. All existing exceedances in soil are located over the primary sewer system. The majority of historical COC exceedances in soil were PCB exceedances and all but one were located over the primary sewer system.
- The majority of stationary PCB-containing transformers that are known to have leaked are located within the body tracks (equipped with track drains). Trains equipped with PCB-containing transformers were stored on the body tracks and posed an additional source of PCBs to the primary sewer system via the track drains.
- There was never an exceedance of the Yard cleanup level or NYCDEP Effluent Limit for PCBs in sewer sediment or water, respectively in the secondary sewer system.

Based on these findings, as described in the OU-5 RI Work Plan and OU-5 RI Report (Roux Associates, 2011b) the OU-5 RI focused only on PCBs in the primary sewer system. This FS will continue to focus only on PCBs in the primary sewer system water and sediment. Note that for completeness, Appendix B presents summary tables of PCB data in sewer sediment and sewer water from both the primary and secondary systems.

Currently, there are no significant ongoing, onsite sources of PCBs. As identified by the Yard RI's, past releases of PCBs are likely attributable to losses from stationary transformers or releases from PCB containing train-mounted transformers over time. Specific locations, dates, or quantities of PCB releases are not known. However, PCB-containing equipment usage was more significant by predecessor railroads than by Amtrak (i.e., prior to 1976). Erosion of PCB-impacted soil into track drains, utility trenches, or open grate manholes during storm events and PCB-impacted soil and/or mobile SPH entering surface drains or catch basins within OU-3 are also likely sources of PCBs entering the sewer system.

The sewer systems underneath the Yard are approximately 100 years old and may be damaged or in need of repair in certain sections. However, based on available sewer invert data and depth to groundwater measurements throughout the Yard, the majority of the sewer system piping is located below the water table and, therefore, would receive an inflow of groundwater and soil through any cracks or holes rather than discharge sewer contents into the soil at the Yard. The No Action ROD issued for OU-6 in March 2010 indicates that both groundwater and saturated soils at the Yard are not considered to be a continuing source of PCB contamination to the Yard sewer system.

Note that as a result of Amtrak's soil remediation efforts, all soil exceeding the Yard soil cleanup levels for all COCs (including PCBs) has been successfully removed in OU-3. Additionally, as a result of both previous and ongoing SPH recovery efforts in OU-3, the volume and overall extent of mobile SPH plume has been reduced significantly, and through the removal and sealing of surface drains and catch basins in OU-3, it is not likely that PCB-impacted soil or SPH is a significant continuing source of PCBs entering the sewer system in OU-3.

Further, through extensive investigation activities conducted in OU-4, Amtrak has thoroughly characterized unsaturated soil quality throughout OU-4. Through the implementation of numerous soil Interim Remedial Measures (IRMs), Amtrak completed significant remediation of PCB-containing unsaturated soils throughout OU-4 prior to NYSDEC's issuance of the OU-4 ROD. At the time the OU-4 ROD was issued by NYSDEC (March 2009), only 12 isolated soil remedial zones or "hot spots" containing PCBs in excess of the Yard soil cleanup levels remained throughout the entire 120-acres comprising OU-4. Since issuance of the OU-4 ROD, Amtrak

has already remediated 5 of these 12 PCB remedial zones. Amtrak's extensive removal of PCB-containing soil in OU-4 has greatly reduced the potential for OU-4 to be acting as a continuing source of PCBs to the Yard sewer system (OU-5).

1.6 Objective and Organization of the Feasibility Study

The primary objective of this FS will be to determine the most appropriate remedial alternative to address identified occurrences of PCBs in the primary sewer system water and sediment. The FS will achieve this objective through the identification, development, and evaluation of alternatives to remediate sewer sediment and water in OU-5.

The identification and analyses of remedial alternatives in the FS will be performed in accordance with the NYSDEC Division of Environmental Remediation (DER) guidance document titled, "DER-10, Technical Guidance for Site Investigation and Remediation" (NYSDEC, 2010), and the Inactive Hazardous Waste Disposal Site Program regulation (6 NYCRR Section 375-1.10).

2.0 SUMMARY OF REMEDIAL INVESTIGATION

The OU-5 RI Report, submitted to the NYSDEC on August 30, 2011, provided a detailed discussion of the previous investigations and Interim Remedial Measures (IRMs) performed in OU-5 and a presentation of analytical data for the COCs. The following sections provide summaries of the information presented in the OU-5 RI Report (Roux Associates, 2011b) and IRMs performed after the submittal of the OU-5 RI. Appendix B provides summary tables of PCB data generated in the sewer systems as part of previous OU-5 investigation activities.

2.1 Previous Investigations

The Phase II RI was a comprehensive, facility-wide investigation performed in February 1993 to identify and determine the nature and extent of contamination at the Yard. The objective of the Phase II RI in relation to OU-5 was to determine if the sewer system contained contamination, particularly PCBs, and was acting as a conduit for offsite migration. Sewer water and sediment were sampled from seven manholes in the primary and secondary sewer systems. PCBs were detected in three sewer water and sediment samples.

In May 1993, the configuration of the sewer systems was surveyed and inspected for discrepancies between available sewer maps and actual conditions. In April 1994, ten manhole locations were identified with visible sewer sediment and were sampled. Locations with PCB-impacted sewer sediment were recommended for sediment removal. PCBs were identified in 5 of the 15 sewer water samples collected.

In June and July 1996, 20 of the 23 proposed sediment removal locations were cleaned using a vacuum truck with all recovered sediment properly disposed (MH-3 and MH-52 contained no sediment and catch basin CB-7 could not be located). Visual inspection of the cleaned manholes was performed during July and August 1996 to investigate the presence of any returning sewer sediments. Returning sewer sediment was identified at three locations: MH-2, MH-40, and MH-42. During the 1996 investigation, sewer water samples were collected from 8 manholes. None of the sewer water samples exceeded the NYCDEP effluent standard of 1 µg/L.

To further investigate the behavior of sediment deposition in the primary sewer system, an expanded sewer investigation was performed in November 1996 through March 1997.

The components of the expanded investigation included: investigation of manhole and catch basin interconnectivity; flow rate measurements to determine rate of deposition; and sewer sediment sampling to determine the source of contamination and sediment migration patterns. The investigation identified the following:

- Visual inspection of MH-39 to determine a possible connection to MH-2 was performed. The investigation determined that there is no connection between the two manholes, but rather a sewer pipe connects MH-39 to the 8-foot by 4-foot culvert that connects MH-2 to MH-40, approximately 3 feet downstream of MH-2.

- Flow rate measurements were collected at the discharge point of the 48-inch diameter pipe and 8-foot by 4-foot culvert located within MH-40, the final manhole of the primary sewer system before exiting the Yard. The maximum combined flow rates from both branches were measured to be 750,000 gallons per day during a precipitation event and 230,000 gallons per day during normal flow.

- Sediment sampling of cleaned manhole locations exhibiting returning sediment deposition identified the presence of PCBs at decreased concentrations than previously detected prior to the vacuum removal.

- Sand bags were placed in specific manholes to facilitate sediment accumulation from specific upstream sewer legs: MH-4 (from MH-41); MH-3; MH-5; MH-11; MH-37; and MH-52. After one month, sediment was identified and sampled from MH-3, MH-11, and MH-52. PCBs were detected in all three sediment samples, ranging from 1 mg/kg to 91.1 mg/kg.

In June 2009, a visual inspection to identify returning sediment deposition was performed. The presence of sediment within some of the inspected manholes was confirmed.

The OU-5 RI was performed in September 2010 through March 2011 in accordance with the May 13, 2010 Work Plan for the OU-5 RI and the Addendum to Work Plan for OU-5 RI dated August 26, 2010 (collectively referred to as Work Plan), approved by NYSDEC on September 1, 2010. This RI investigation work consisted of the following components:

- Comprehensive inspection and inventory of sewer system components (i.e., manhole and inlet grate conditions, catch basin and inlet grate conditions) with the objective of developing an accurate sewer system basemap.

- Three rounds of sewer sediment and water sampling performed to characterize dry weather conditions, precipitation conditions, and post-precipitation conditions.

2.2 Interim Remedial Measures

Data generated during OU-5 RI activities indicated that sewer sediment and sewer water located within MH-6 was impacted with PCBs and required remediation. Sewer manhole MH-6 will be used as part of future remediation activities in OU-3. Specifically, as documented in the NYSDEC-approved Remedial Design/Remedial Action (RD/RA) Work Plan (Roux Associates, 2011a), a Dual Phase Vacuum Extraction (DPVE) system will be installed in OU-3 to address residual separate phase hydrocarbon (SPH). Sewer manhole MH-6 will be utilized as a NYCDEP-permitted discharge point for treated groundwater. Before the DPVE system can become operable, it was necessary to remediate and rehabilitate this manhole. As such, Remedial Engineering prepared an IRM Work Plan dated August 23, 2011 for the timely clean out and rehabilitation of MH-6, located within the primary sewer system at the Yard. This IRM Work Plan was approved by NYSDEC in their letter dated September 2, 2011.

On October 4, 2011, Clean Harbors Environmental Services (CHES) completed remediation and rehabilitation activities in MH-6, under the supervision of Roux Associates. This work included the removal of sediment and water through the use of a vacuum truck. Further, CHES sealed all relic, inactive pipes entering MH-6 using inflatable packers followed by plugging with concrete. Additionally, CHES sealed cracks within MH-6 in an effort to reduce groundwater infiltration into the manhole. At the completion of this project, CHES properly disposed of all waste generated in accordance with all regulations and the Soil/Materials Management Plan contained in the OU-3 RAWP.

As described in the NYSDEC-approved OU-5 IRM Work Plan, Roux Associates collected a post remediation water sample from within MH-6 to confirm the remediation activities were effective. On October 12, 2011 Roux Associates collected a sample of standing water from the bottom of MH-6 and submitted it for analysis for PCBs. PCBs were not detected in this sample, confirming that remediation activities in MH-6 were effective. In accordance with the OU-5 IRM Work Plan, MH-6 remediation and rehabilitation activities will be described in detail and submitted to NYSDEC in a Construction Completion Report (CCR).

2.3 Exposure Assessment

Note that based on the unique nature of this Operable Unit (i.e., fully contained sewer system), it was determined that an Exposure Assessment and Section was not warranted for this Operable Unit.

2.4 Nature and Extent of Contamination

The nature and extent of PCB contamination in sewer sediment and water in the primary sewer system is based on the collective findings of the OU-5 RI and the previous investigations discussed in Section 2.1. The remainder of this section discusses sample results collected for both sample media, and identifies sewer manholes of concern where concentrations of PCBs in sewer sediment exceeded the Yard soil cleanup level or sewer water exceeded the NYCDEP wastewater effluent limit, following the 1996 sediment removal IRM.

2.4.1 PCBs in Sewer Sediment

In summary, 64 discrete sewer sediment samples have been collected from 17 manhole locations in the primary sewer system and analyzed for PCBs during the multiple OU-5 investigations. Of those 64 discrete sediment samples, 61 samples contained PCBs at concentrations that ranged from 0.065 mg/kg to a high of 160 mg/kg. Thirteen samples from nine manhole locations contained PCBs at concentrations that exceeded the 25 mg/kg Yard soil cleanup level.

Subsequent to the 1996 Sediment Removal IRM, PCBs in sediment exceeding the 25 mg/kg Yard soil cleanup level were found in samples from manholes MH-2, MH-3, MH-6, MH-37, MH-40, and MH-52. During the 2010/2011 OU-5 RI, PCBs in sediment exceeding the Yard soil cleanup level were found only in samples from manholes MH-6 and MH-38.

Note that during the approximate 14 year span between the Post-1996 Sediment Removal IRM sampling and the 2010/2011 OU-5 RI, Amtrak has conducted an extensive amount of PCB remediation throughout the Yard. This has included the removal of PCB-impacted soils and SPH in OU-3, as well as the removal of PCB-containing soils in OU-1 and OU-4. Amtrak's Yard-wide remediation activities have likely resulted in the significant reduction in PCB-containing sewer sediments.

2.4.2 PCBs in Sewer Water

In summary, 109 sewer water samples (64 unfiltered and 45 filtered) have been collected from 18 manhole locations in the primary sewer system and analyzed for PCBs during the multiple OU-5 investigations. Of those 109 sewer water samples, 10 samples (nine unfiltered and one filtered) collected from seven manhole locations contained PCB concentrations that exceeded the NYCDEP wastewater effluent limit to combined (storm and sanitary) sewers of 1 µg/L.

Following the 1996 Sediment Removal IRM, all sewer water samples were below the NYCDEP wastewater effluent limit. During the 2010/2011 OU-5 RI, PCBs in sewer water exceeding the NYCDEP effluent limit to combined sewers were found in three locations (MH-3, MH-6, and MH-40). Note that with the exception of MH-3, these locations correspond to, or are downstream of the limited locations were elevated PCBs in sediment persist based on 2010/2011 OU-5 RI data. With the exception of MH-6, PCBs were identified in excess of the NYCDEP effluent limit in unfiltered samples. This finding is evidence that PCB-impacts in sewer water can be attributed to agitation and re-suspension of sewer sediment in the water sample. This is further supported by the fact that samples exceeding the NYCDEP effluent limit were collected during heavy flow events (precipitation, post precipitation, or during extensive dewatering activities associated with ESA construction).

2.4.3 Summary of Sewer Manholes of Concern

Plate 1 provides a graphical representation of the sewer manholes of concern to be evaluated in this Feasibility Study. The manholes of concern were selected based upon an evaluation of sewer sediment data collected in the 2010-2011 Remedial Investigation which identified manholes MH-6 and MH-38 as containing elevated concentrations of PCBs in sediment. Manhole MH-6 was successfully remediated in October 2011 as part of the IRM described in Section 2.2 and therefore has been excluded as a manhole of concern. Additionally, since manhole MH-40 receives the confluence of flow from the entire primary sewer system, it will be considered a manhole of concern for this Feasibility Study.

3.0 REMEDIAL GOALS AND REMEDIAL ACTION OBJECTIVES

This section presents the remedial goals, standards, criteria, and guidance (SCGs), and remedial action objectives (RAOs) that apply to sewer sediment and water in OU-5. The identification of the remedial goals, SCGs, and RAOs for OU-5 was performed in accordance with 40 CFR 300 - National Contingency Plan (NCP) (USEPA, 1994), 6 NYCRR Part 375 - Environmental Remediation Programs (NYSDEC, 2006), and NYSDEC's DER-10 Technical Guidance for Site Investigation and Remediation (NYSDEC, 2010).

The remedial goals, which are common for all registered inactive hazardous waste sites, as provided in 6 NYCRR Part 375 and the NYSDEC's DER-10 guidance document are:

- Restoration to pre-disposal/pre-release conditions, to the extent feasible and authorized by law; and
- Elimination or mitigation of all significant threats to public health and the environment presented by the contaminants caused by site-related activities through the proper application of scientific and engineering principles.

The remedial goals serve to establish the foundation for developing RAOs specific to OU-5 sewer sediment and water. RAOs are operable unit-specific objectives for the protection of public health and the environment and are expressed with regard to the concentration of COCs and comparison to chemical-specific SCGs. The chemical-specific SCGs used for comparison purposes in the OU-5 RI were the Yard soil cleanup level for PCBs and the NYCDEP Effluent Limit for PCBs.

3.1 Identification of SCGs

SCGs are promulgated requirements and non-promulgated guidance that govern activities that may affect the environment. Specifically, the standards and criteria are cleanup standards, standards of control and other substantive environmental protection requirements, criteria, or limitations that are generally applicable, consistently applied, and officially promulgated under federal or state law. Guidance includes non-promulgated criteria that are not legal requirements however should be considered based on professional judgment when applicable (NYSDEC, 2010). The three general SCG categories specified in United States Environmental Protection Agency (USEPA) guidance documents are: location-specific SCGs; action-specific SCGs; and chemical-specific SCGs.

Location-specific SCGs are restrictions placed on the concentration of COCs or performance of remedial activities solely because they are in specific locations such as floodplains, wetlands, historic places, or sensitive ecosystems. OU-5 is not located in the aforementioned locations. Therefore, no applicable location-specific SCGs were identified.

Table 1 presents a comprehensive listing of potential action and chemical-specific SCGs that may govern remedial actions in OU-5. The following sections provide a discussion of the chemical-specific SCGs.

3.1.1 Chemical-Specific SCGs

The applicable chemical-specific SCGs are the Yard soil cleanup levels for the COCs and Toxic Substance Control Act (TSCA) standards for PCBs (40 CFR 761) and the NYCDEP Limitations for Effluent to Sanitary or Combined Sewers.

As discussed in Section 1.1, the NYSDEC provided recommended soil cleanup levels for the COCs in February 1997. The Yard soil cleanup levels were revised by the OU-4 ROD, dated April 2009. The applicable Yard soil cleanup for evaluation of OU-5 sewer sediment data is the following:

- Total PCBs – 25 mg/kg

The NYCDEP Effluent Limits are provided as Table A in the NYCDEP's Wastewater Quality Control Application. The applicable NYCDEP Effluent Limits for OU-5 is the following:

- Total PCBs – 1 µg/L

TSCA defines PCB remediation waste as environmental media "containing PCBs as a result of a spill, release, or other unauthorized disposal, at the following concentrations:

- Materials disposed prior to April 18, 1978, that are currently at concentrations greater than or equal to 50 ppm PCBs, regardless of the concentration of the original spill;
- Materials which are currently at any volume or concentration where the original source was greater than or equal to 500 ppm PCBs beginning on April 18, 1978, or greater than or equal to 50 ppm PCBs beginning on July 2, 1979; and
- Materials which are currently at any concentration if the PCBs are spilled or released from a source not authorized for use under 40 CFR 761."

The cleanup requirements for PCB remediation waste are provided in 40 CFR 761.61(a)(4) and are dependent on PCB concentrations and potential exposure relevant to occupancy usage (i.e., high and low occupancy). The Yard soil cleanup level for PCBs (25 mg/kg) is consistent with the cleanup level for PCB remediation waste in low occupancy areas. Low occupancy use is defined as exposure for less than 335 hours annually, or an average of 6.75 hours per week for any one person. For low occupancy uses, the TSCA regulation is the following:

- PCB remediation waste may remain at a cleanup site at concentrations greater than 25 mg/kg and less than 50 mg/kg if the site is secured by a fence and marked with a sign.
- PCB remediation waste may remain at a cleanup site at concentrations greater than 25 mg/kg and less than 100 mg/kg if the site is covered with a cap meeting the requirements of 40 CFR 761.61 (a)(7) and 40 CFR 761.61(a)(8).
- PCB remediation waste at concentrations greater than 100 mg/kg requires removal.

The NYS regulations for identification and handling of hazardous waste, 6 NYCRR Part 370 through 373, pertain to the waste classification of soil. 6 NYCRR Section 371.4(e) states solid wastes containing 50 mg/kg or greater of PCBs are listed hazardous wastes. Soil containing 50 mg/kg or greater of PCBs would be classified for disposal as a New York State B007 listed PCB hazardous waste.

3.2 Remedial Action Objectives for OU-5

The RAOs were developed based primarily on the chemical-specific SCGs discussed above given that there is little to no risk for exposure to sewer sediment and water. The following are the RAOs for impacted sewer sediment and water in OU-5:

- Continue to prevent direct contact with impacted sewer sediment and water;
- Remove PCBs above 100 mg/kg in accordance with the TSCA low occupancy regulation;
- Address PCBs above 25 mg/kg in sewer sediment and 1 µg/L in sewer water; and
- Prevent offsite migration of PCBs through the sewer system.

3.3 General Response Actions

General response actions (GRAs) are operable unit specific measures that can be performed to achieve the RAOs. GRAs include treatment, containment, extraction, excavation and disposal, institutional controls or a combination of these actions.

The applicable GRAs for sewer sediment and water exceeding the chemical SCGs are:

- No Action
- Sampling/monitoring
- Sediment Removal/Disposal

As demonstrated by OU-5 RI sampling, PCB exceedances of the NYCDEP effluent limit in sewer water samples appears to be affiliated with re-suspension of sediment. Based on this finding, it has been determined that the sewer sediment GRAs would in turn address the sewer water.

The primary sewer system is an active combined sewer that services the majority of the Yard. Additionally, the primary sewer system currently receives dewatering discharge from the ESA construction. Modifications to the existing sewer system have been made by ESA to suit construction needs; however, removal or major structural rehabilitation/replacement of the sewer system is not feasible at this time or the foreseeable future. The isolated incidences of PCB-impacted media within the sewer system do not warrant full removal of sewer piping. Therefore, removal with respect to PCB-impacted sediment only is identified as an appropriate GRA for OU-5. In effect, sediment removal/disposal is the presumptive remedy for addressing PCB-impacted sewer sediment.

In situ treatment of PCB-impacted sediment within sewers has not been widely demonstrated and therefore will not be evaluated as an applicable GRA.

4.0 IDENTIFICATION AND SCREENING OF TECHNOLOGIES

This section develops the GRAs discussed in the previous section into potential remedial technologies by identifying, evaluating, and screening applicable remedial technologies that may be employed in OU-5 to achieve the RAOs. The remedial technologies to be evaluated in this section have been chosen based on evidence of their success in addressing PCBs in particular.

The technology screening process considers whether technologies and process options can by themselves or in combination address the impacted media in OU-5 and meet the RAOs. During the screening of the technologies, the demonstrated ability of the technology to prevent potential impacts to human health and the environment and proven reliability of the technology under similar site conditions is evaluated.

The technology types and associated process options in this section have been identified through a review of NYSDEC and USEPA information and guidance, relevant literature, experience with similar types of environmental conditions, and engineering judgment. The selected remedial technologies will be evaluated on the basis of:

- *Effectiveness* – The effectiveness criterion evaluates the extent to which the technology meets the established RAOs and considers the short-term effectiveness, long-term effectiveness, and potential impacts to human health and the environment. Short-term effectiveness refers to the effects during construction and/or implementation of the technology. Long-term effectiveness refers to the period after the remedial action is in place.

- *Implementability* – The implementability criterion focuses on both technical and administrative feasibility of constructing and operating a remedial action. Institutional aspects of the remedial technologies with factors such as institutional constraints, time schedules, and the availability of services, equipment, and trained personnel, compliance with applicable rules and regulations being considered as part of the evaluation. Due to the widespread presence of continuously operated railroad tracks and utilities, consideration of this constraint will be evaluated for any remedial technology.

The evaluation of technology effectiveness and implementability for technology screening purposes incorporates elements from DER-10 (NYSDEC, 2010), and the USEPA document, "Guidance for Conducting Remedial Investigations and Feasibility Studies under CERCLA" (USEPA, 1988b).

After screening, the remaining technologies will be evaluated as remedial alternatives to ultimately develop a recommended remedial alternative for OU-5.

4.1 Technology Screening

As discussed in Section 3.4, the presumptive remedy for addressing PCB-impacted sediment and water is removal and disposal. Based on continuous railroad operation at the Yard, institutional controls/containment technologies will be required to augment the presumptive removal technology. Therefore, the three technologies that have been identified to be potentially applicable and selected for screening include:

Institutional Control/Engineering Controls

- Access/Use Restrictions
- Sampling/Monitoring

Sediment Removal/Disposal

- Hydraulic (Jetting) Removal Method
- Mechanical Removal Methods

The following sections provide a brief description of the above technologies and present an evaluation of the technology's effectiveness and implementability.

4.1.1 Access/Use Restrictions

Access restriction would prevent workers from coming into contact with PCB-impacted sewer sediment and water. Amtrak workers do not typically come into contact with the sewer system as a course of railroad operations. However, ESA workers may come into contact with the sewer system during any construction-related modifications. Construction plans made available to Amtrak do not indicate any future structural modifications to the sewer system at the known manholes of concern. In summary, there does not appear to be a concern with workers coming into contact with PCB-impacted sediment at the manholes of concern.

Institutional controls that could be implemented to enforce use restrictions include notifying all parties working at the Yard that PCBs are present and restricting access to the manholes of

concern. Engineering controls implemented to enforce the access/use restrictions include maintenance of manhole covers to prevent direct exposure to workers.

EVALUATION

Effectiveness	Implementability
• No short term or long term effects to workers. • Although no direct exposure to impacted media by workers is expected, there is an ongoing risk of impacted media migrating offsite via normal sewer flow. The risk of offsite migration could increase over time.	• Highly implementable. Workers do not need to access the sewer for railroad operations. Sewer manholes typically remain sealed at all times.

The access/use restriction technology is typically teamed with additional remedial technologies. Theoretically, access/use restrictions would achieve the RAO associated with the prevention of direct contact and other exposure pathways. This technology alone would not satisfy the RAO of preventing the potential for offsite migration of contaminants or removal of hazardous waste. This technology is not a viable long term remedy but can be effectively used in conjunction with the removal technology.

4.1.2 Sampling/Monitoring

Sewer sampling and monitoring would consist of sampling sewer sediment and water, if present, at the manholes of concern at a routine frequency. The PCB concentrations at these manholes would be monitored for any indication of PCB-impacted media migration through the sewer system and any exceedance of the SCGs.

EVALUATION

Effectiveness	Implementability
• No short term or long term effects to workers. • Sampling and monitoring concentrations alone will not be effective in meeting the RAOs but would identify PCB trends and any migration within the sewer, triggering maintenance activity.	• Sewer sampling is moderately implementable. Some of the manholes of concern require access agreements and some are located within the active body tracks. Proper planning incorporated into the monitoring plan would alleviate any implementability concerns.

This technology, teamed with other remedial alternatives, could be effective in meeting the RAOs. With a monitoring plan in place, any migration or change in occurrence of PCBs within the sewer system would be identified. Identification of PCB exceedances could trigger active maintenance activity (e.g., manhole sediment cleanout), if necessary. Monitoring would be performed until potential PCB sources within OU-3 and OU-4 are fully remediated, ESA construction is completed, and multiple consecutive sampling/monitoring rounds confirm PCBs are not identified in excess of the SCGs.

4.1.3 Hydraulic (Jetting) Removal Method

Hydraulic (jetting) of sewer manholes and sediment removal utilize high water velocity to clean the sewer interior walls and manhole structure.

Hydraulic jetting directs a high pressure stream of water directly at the interior surfaces to be cleaned. Jetting equipment is most often teamed with a high-powered vacuum unit (i.e., Guzzler Truck) that mechanically removes and containerizes the waste from the manhole location (see description below). Jetting is commonly used for relatively small diameter, low flow sewers.

EVALUATION

Effectiveness	Implementability
• Short term effects include significant health and safety concerns to the remediation worker during confined space work activities (e.g., washing and rinsing manhole interior). Exposure concerns are mitigated through the use of mechanical/vacuum equipment for waste retrieval. • Cleaning the manholes of concern would be effective in removing PCB-impacted media from the sewer. However, until the sources of PCBs in OU-3 and OU-4 are fully remediated, there is a potential for manholes to become re-contaminated. Monitoring and/or cleaning of sewer manholes after the completion of remediation in OU-3 and OU-4, and post ESA construction would be required to confirm long term effectiveness is achieved.	• The hydraulic removal methods described above are readily available and commonly used for sewer cleaning. Both remediation contractors and specialized sewer cleaning contractors are available to perform this work. • Transportation contractors and disposal facilities capable of receiving PCB-impacted waste are readily available. • Manholes located within tracks may pose access issues for large equipment and specialized sewer contractors. Contractor training, procurement of specialized rail equipment, and close coordination with track operations personnel would be required.

Jetting of the manholes of concern would be an applicable technology, and therefore will be retained for further evaluation.

4.1.4 Mechanical Removal Methods

Mechanical methods of cleaning sewer manholes utilize mechanical equipment inserted in the sewer via manhole access to physically remove collectable sediment and water from the manhole structures. Methods include the use of high-powered vacuum units (i.e., Guzzler Truck) and power bucket machines.

High-powered vacuum units utilize vacuum to mechanically break up and remove sewer sediment from the manhole. This technology will also remove sewer water in conjunction with the sewer sediments. Power buckets utilize a winch or cable system that pulls a collection bucket through the sewer or large manhole structure. The bucket physically captures the sediment to be removed within the sewer structure.

EVALUATION

Effectiveness	Implementability
• Lower short term effects via health and safety concerns to the remediation worker being that confined space entry is not required. Exposure concerns are mitigated through the use of mechanical equipment for waste retrieval. • Mechanical sediment removal from sewer manholes of concern known to contain large volumes of sediment would be fully remediated, providing long term effectiveness. • Cleaning the manholes of concern using high vacuum or a power bucket would be effective in removing PCB-impacted media. However, until the sources of PCBs in OU-3 and OU-4 are fully remediated, there is a potential for re-contamination. Monitoring and/or cleaning of sewer manholes after the completion of remediation in OU-3 and OU-4, and post ESA construction would be required to confirm long term effectiveness is achieved.	• The mechanical removal methods described above are readily available and commonly used for sewer cleaning. Specialized sewer cleaning contractors are available to perform this work. • Transportation contractors and disposal facilities capable of receiving PCB-impacted waste are readily available. • Manholes located within tracks may pose access issues for large equipment and specialized sewer contractors. Contractor training, procurement of specialized rail equipment, and close coordination with track operations personnel would be required.

As discussed in Section 2.4.3, several of the sewer manholes of concern routinely exhibit low volumes of sediment. An aggressive removal technique such as the power bucket would not be

required at these locations. The use of high-powered vacuum to recover sediments and water would be necessary (especially in conjunction with the hydraulic jetting technology described above), therefore, this is an applicable technology, and will be retained for further evaluation.

5.0 DESCRIPTION AND EVALUATION OF REMEDIAL ALTERNATIVES

Removal and offsite disposal has been identified as the presumptive remedy for addressing PCB impacted sediment in OU-5. As discussed in Section 2.4.2, evaluation of filtered and unfiltered sewer water samples revealed that the presence of PCBs in sewer water can be attributed to sediment suspension. Therefore, sediment removal will in turn remedy PCB-impacted sewer water.

Remediation in OU-3 and OU-4 is currently underway. Until remediation is completed in both OU-3 and OU-4, there is a potential for migration and recontamination to OU-5. Therefore, although each of the OU-5 remedial alternatives will be initiated in the short term, they will not be concluded until following completion of remediation in OU-3, OU-4, and completion of ESA construction. Access/use restrictions would be used as interim measures until the OU-5 remediation is completed.

The remedial action alternatives for OU-5 include:

Remedial Alternative 1:	No Action
Remedial Alternative 2:	Sewer System Monitoring and Deferred Cleanout of Sewer Manholes MH-38 and MH-40 (Post OU-3 and OU-4 Remediation and ESA Construction)
Remedial Alternative 3	Cleaning of MH-38 and MH-40 and Sewer System Monitoring

Each of the above alternatives will be evaluated based on seven specific criteria. The results of this assessment will be used to comparatively evaluate the alternatives to determine which is most appropriate for implementation. The seven criteria are provided in DER-10, Technical Guidance for Site Investigation and Remediation (NYSDEC, 2010), the NCP (40 CFR Part 300.430), and Guidance for Conducting Remedial Investigations and Feasibility Studies under CERCLA (USEPA, 1988b). The seven evaluation criteria are the following:

- Overall protection of public health and the environment
- Compliance with SCGs
- Long-term effectiveness and permanence
- Reduction of toxicity, mobility or volume

- Short-term impacts and effectiveness
- Implementability
- Cost

Overall protection of public health and the environment and compliance with SCGs are termed threshold criteria, whereas the remedial alternative must meet these requirements in order to be eligible for selection. The remaining five criteria are termed primary balancing criteria and are used as the primary basis of comparison in selecting the recommended remedial alternative.

The following sections provide a description of the three remedial alternatives and evaluate the alternatives based on the above seven evaluation criteria.

5.1 Remedial Alternative 1: No Further Action

In accordance with the NCP and the DER-10, a no action alternative is evaluated to provide a baseline for comparison of potential risks posed if no remedial action were performed. For this remedial alternative, all sewer sediment and water with PCB concentrations exceeding the Yard soil cleanup level would remain in place.

5.1.1 Overall Protection of Human Health and the Environment

Remedial Alternative 1 would not be protective to human health and the environment. The presence of sediment and water with PCB concentrations exceeding the Yard soil cleanup levels would continue to pose a risk for offsite migration. Several of the manholes of concern exhibited historic PCB concentrations exceeding 50 mg/kg in samples collected during the Post-1996 Sediment Removal IRM and 2010/2011 OU-5 RI, which would classify this sediment as a New York State B007 hazardous waste and TSCA PCB Remediation Waste. One manhole of concern with respect to potential for offsite migration is MH-40, which is the collection point for the three sewer legs containing the manholes of concern and the point where the primary sewer system exits MTA property.

Access to the sewer is not a part of routine railroad operations. The sewer remains sealed and not accessed by humans or wildlife.

5.1.2 Compliance with SCGs

A summary of the applicable SCGs is presented on Table 1. Since no remedial actions would be conducted under this alternative, many of the action-specific SCGs would not be relevant to this alternative. This alternative would not comply with the applicable chemical and action specific SCGs. Specifically, this remedial alternative would not comply with:

- The chemical-specific SCGs: the Yard soil cleanup level for PCBs, TSCA low occupancy cleanup levels, and the NYCDEP Limitations for Effluent from Combined Sewers.
- The 6 NYCRR 375 goals to restore the site to pre-disposal conditions to the extent feasible and authorized by law and to eliminate or mitigate all significant threats to public health and the environment.

5.1.3 Long-Term Effectiveness and Permanence

This evaluation criterion is based on the amount of residual risk of contamination that remains after the remedial action alternative is implemented. Alternative 1 provides neither long-term effectiveness nor permanence since the PCB concentrations in sewer water and sediment exceeding the chemical-specific SCGs would remain the same. If Alternative 1 were to be implemented, the current level of risk for offsite migration would remain the same.

5.1.4 Reduction of Toxicity, Mobility, or Volume

This alternative would not be effective in reducing the toxicity, mobility, or volume of impacted soil. The toxicity and volume of the NYS B007 listed PCB hazardous waste would not be reduced. This alternative would not provide a means to ensure offsite migration would be prevented.

5.1.5 Short-Term Impact and Effectiveness

Since there are no actions proposed for this alternative, there is no associated construction and implementation period and, therefore, no associated short-term impacts to human health and the environment.

5.1.6 Implementability

Implementability concerns posed by this alternative do not exist since there would not be any actions performed. Therefore, this alternative would be readily implementable.

5.1.7 Cost

Since there are no remedial actions for this alternative, there is no capital cost associated with Remedial Alternative 1.

5.2 Remedial Alternative 2: Sewer System Monitoring and Deferred Cleanout of Sewer Manholes MH-38 and MH-40 (Post OU-3 and OU-4 Remediation and ESA Construction)

Remedial Alternative 2 consists of periodic monitoring of manhole MH-40. Sewer water and sediment samples would be collected every two years and submitted for PCB analysis. During each event, samples would be collected both during dry conditions and during post-precipitation conditions. The monitoring program would continue until remediation efforts in OU-3 and OU-4 are completed and ESA Construction is completed, at which time cleaning of the sewer manholes MH-38 and MH-40 would be performed. The rationale for selecting MH-38 and MH-40 as key locations for remediation as part of this Remedial Alternative is provided below:

MH-38

As described above in Section 2.4.3, MH-38 and MH-6 were the only manholes to contain exceedances of the sediment SCG during the 2010/2011 OU-5 RI sampling events. Amtrak has already remediated MH-6 as an IRM completed in October 2011. Therefore, MH-38 is the only location with a remaining, recent exceedance of the sediment SCG. In the interest of proactively remediating this exceedance and preventing potential migration, the prompt remediation of MH-38 was included as a component to this Remedial Alternative.

MH-40

The cleanout of MH-40 would be the key component of this Remedial Alternative. As described in the OU-5 RI Report, in 1997 the New York City Transit Authority (NYCTA) installed a weir within MH-40. This weir was installed as part of the construction of a new offsite sewer siphon located downstream of MH-40. The sewer siphon was part of a NYCTA subway expansion project, completely independent and unrelated to Amtrak's Sunnyside Yard. Although the NYCTA's project is unrelated to Sunnyside Yard, the weir installed by NYCTA in MH-40 serves as a sediment trap, removing impacted sediments at this location. In addition, MH-40 represents the collection point for the three sewer legs containing the manholes of concern and it is the furthest downstream manhole in located in OU-5.

All sediment and water present within manholes MH-38 and MH-40 would be cleaned using the hydraulic jetting method, coupled with the use of mechanical sediment and water removal (i.e., high-powered vacuum). Worker entry into the manholes may be required to aide hydraulic jetting equipment and vacuum equipment. Worker entry to clean the manholes following sediment removal would be required to pressure wash the interior. The sediment and wash water generated during the cleaning of all sewer manholes would be collected using a vacuum truck and containerized for offsite disposal. A gravity separator would likely be required to separate solids and water prior to disposal of both media.

Remediation-derived waste would be transported offsite for disposal. Waste material would be sampled for waste characterization and disposed of accordingly. The quantity of sediment, sewer water, and wash water is not quantifiable because the amount of sediment and water present in sewer manholes has historically been variable at these locations and will be determined upon inspection immediately prior to cleaning. All liquids would be stored in temporary onsite tanks to await disposal or vacuumed directly into trucks.

Post cleanout monitoring (i.e., every two years) would be conducted in manhole MH-40until two consecutive rounds of monitoring data show no exceedances of the sediment or water SCGs. This approach will ensure that any PCB-containing sediment located in sewer legs between manholes will ultimately be recovered from the sediment trap in MH-40. Should monitoring identify any exceedances of either the sediment or water SCG, additional cleanout of MH-40 will be completed, and monitoring will continue. The sewer monitoring plan would be incorporated in the site-wide Site Management Plan to be developed that includes OU-3 performance monitoring and OU-6 groundwater monitoring.

5.2.1 Overall Protection of Human Health and the Environment

This alternative would ultimately meet the RAOs for providing protection to human health and the environment, preventing offsite migration, and hazardous waste removal. Protection is provided by removing PCB impacted sewer sediment and water exceeding the chemical-specific SCGs.

Institutional and engineering controls would not be required to provide future protection to humans and the environment. The risk for offsite migration of known PCB impacted media would ultimately be removed. At the time Remedial Alternative 2 would be implemented, OU-3 and OU-4 will have been fully remediated and ESA construction would be complete and the risk for future impacts to OU-5 and offsite migration via the sewer system would be completely removed.

5.2.2 Compliance with SCGs

A summary of the applicable SCGs is presented in Table 1. This remedial action alternative would comply with the applicable chemical and action-specific SCGs for the media of concern.

Specifically, Remedial Alternative 2 would:

- Satisfy the 6 NYCRR Part 375 goal to eliminate or mitigate all significant threats to public health and the environment;
- Effectively remove "consequential" amounts of NYS listed hazardous waste in accordance with 6 NYCRR Part 375;
- Comply with all TSCA low occupancy PCB Remediation cleanup requirements; and
- Comply with removing impacted media exceeding the chemical-specific SCGs.

5.2.3 Long Term Effectiveness and Permanence

Remedial Alternative 2 provides long-term effectiveness through the permanent removal of PCB-impacted sewer sediment and water. All material would be transferred to an offsite disposal facility equipped to properly manage this material.

5.2.4 Reduction of Toxicity, Mobility, or Volume

Sediment removal and sewer cleaning would effectively reduce the toxicity, mobility, and volume of sediment with PCB concentrations exceeding the Yard soil cleanup levels. As demonstrated by the OU-5 RI, PCB-impacted sewer water is attributed to suspended sediment in the water samples. Therefore, the toxicity, mobility, and volume of impacted sewer water will also be reduced via sediment removal and sewer cleaning following completion of remediation of OU-3 and OU-4, and ESA construction.

5.2.5 Short-Term Effectiveness

This alternative poses a moderate level of short-term effects to remedial workers during sewer cleaning activities. Remedial workers will be required to perform confined space entry and will be in direct contact with sewer water, sediment, and vapors. Health and safety concerns would be reduced through verification that all remedial workers possess up to date confined space entry training, personal protective equipment is used at all times (e.g., safety harnesses, respiratory protection), and use of mechanical equipment for cleaning as much as possible. A limited scope CAMP would be employed to monitor VOCs at the work area and site perimeter.

This alternative poses no short term risks to community. Waste materials will be contained in tanks or within vacuum trucks upon removal and throughout the transportation process to the disposal facility.

5.2.6 Implementability

The sewer cleaning methods to be used for this remedial alternative are readily available. Experienced remedial contractors, specialized sewer contractors, and mechanical equipment are readily available to implement the remedial activities associated with this alternative.

Implementability concerns that do exist for this remedial alternative include access to MH-38 and MH-40. Sewer entry will most likely be required for cleanout of the manholes. Since the primary sewer system is a combined sewer system, there is the potential to encounter a significant volume of combined waste, which increases health and safety precautions. Although it is expected that mechanical equipment will be used for waste removal, vapors may be present causing an increased time to perform the work and increased personnel to account for shorter shifts while performing confined space entry work.

Access agreements would be required for cleaning of MH-40. Without an access agreement with MTA and possibly an off-site 3rd party that allows a significant amount of work space for equipment and personnel, cleaning of this manhole in the near-term will not be possible. Manhole MH-38 is located within the body tracks. A significant level of coordination with Amtrak's Track Department will be required to arrange for trains to be removed from this area and ensure no damage to the tracks occurs during the cleaning. Mobilizing cleaning equipment

to MH-38 will also require a significant amount of coordination and possibly mandate the use of specialized equipment (e.g., transport equipment via rail).

This cleanout of these manholes would be performed following completion of the OU-3 and OU-4 remediation, and ESA construction. Although not an implementability concern, it should be noted that the active remediation portion of this alternative would not be implemented for several years.

5.2.7 Cost

The estimated capital cost to implement Remedial Alternative 2 is $967,414. This capital cost consists of the sewer manhole monitoring plan and sewer manhole of concern cleaning.

5.3 Remedial Alternative 3: Cleaning of MH-38 and MH-40 and Sewer System Monitoring

Remedial Alternative 3 consists of the same elements as Remedial Alternative 2, however rather than defer OU-5 active sewer system remediation until after the completion of OU-3 and OU-4 remediation and completion of ESA construction; Amtrak would proactively begin OU-5 remediation immediately. In the near term, MH-38 and MH-40 will be accessed and cleaned using similar methods used for the MH-6 IRM, and as described above in Remedial Alternative 2. The rationale for selecting MH-38 and MH-40 as key locations for remediation as part of this Remedial Alternative is provided below:

MH-38

As described above in Section 2.4.3, MH-38 and MH-6 were the only manholes to contain exceedances of the sediment SCG during the 2010/2011 OU-5 RI sampling events. Amtrak has already remediated MH-6 as an IRM completed in October 2011. Therefore, MH-38 is the only location with a remaining, recent exceedance of the sediment SCG. In the interest of proactively remediating this exceedance and preventing potential migration, the prompt remediation of MH-38 was included as a component to this Remedial Alternative.

MH-40

The cleanout of MH-40 would be the key component of this Remedial Alternative. As described in the OU-5 RI Report, in 1997 the New York City Transit Authority (NYCTA) installed a weir

within MH-40. This weir was installed as part of the construction of a new offsite sewer siphon located downstream of MH-40. The sewer siphon was part of a NYCTA subway expansion project, completely independent and unrelated to Amtrak's Sunnyside Yard. Although the NYCTA's project is unrelated to Sunnyside Yard, the weir installed by NYCTA in MH-40 serves as a sediment trap, removing impacted sediments at this location. In addition, MH-40 represents the collection point for the three sewer legs containing the manholes of concern and it is the furthest downstream manhole in located in OU-5.

All sediment and water present within manholes MH-38 and MH-40 would be removed using a combination of hydraulic jetting coupled with mechanical vacuum recovery. The manhole interior would be thoroughly washed and rinsed to remove adhered sediment. The sediment and wash water generated during the cleaning of these manholes would be collected using a vacuum truck and containerized for offsite disposal. A gravity separator would likely be required to separate solids and water prior to disposal of both media. Waste material would be sampled for waste characterization and disposed of accordingly.

Following the cleaning of MH-38 and MH-40, a routine monitoring plan consisting of sampling MH-40 and identifying trends in PCB occurrence in sewer sediment and water would commence.

Sewer water and sediment samples would be collected every two years and submitted for PCB analysis. During each event, samples would be collected both during dry conditions and during post-precipitation conditions. The monitoring program would continue until remediation efforts in OU-3 and OU-4 are completed, ESA construction is completed, and two consecutive rounds of data are obtained from MH-40 without any exceedances of the sediment or water SCGs. This approach will ensure that any PCB-containing sediment located in sewer legs between manholes will ultimately be recovered from the sediment trap in MH-40. Should monitoring identify an exceedance of either the sediment or water SCG, additional cleanout of MH-40 will be completed, and monitoring will continue. The sewer monitoring plan would be incorporated in the site-wide Site Management Plan to be developed that includes OU-3 performance monitoring and OU-6 groundwater monitoring.

5.3.1 Overall Protection of Human Health and the Environment

This alternative would meet each of the RAOs outlined in Section 3.2: providing protection to human health and the environment; removing sewer media exhibiting hazardous concentrations and exceeding chemical-specific SCGs; and preventing offsite migration. Protection is provided by removing PCB-impacted sewer sediment and water exceeding the chemical-specific SCGs.

Institutional and engineering controls would not be required to provide future protection to humans and the environment. Sediment exhibiting hazardous concentrations would be scheduled for removal immediately, followed by monitoring and additional cleanout (if required). This would continue until the completion of the OU-3 and OU-4 remediation, and ESA construction, and until two consecutive rounds of monitoring confirms no exceedances of the SCGs in MH-40. Therefore, the risk for impacts to OU-5 and offsite migration via the sewer system would be completely removed.

5.3.2 Compliance with SCGs

A summary of the applicable SCGs is presented in Table 1. This remedial action alternative would comply with the applicable chemical and action-specific SCGs for the media of concern.

Specifically, Remedial Alternative 3 would:

- Satisfy the 6 NYCRR Part 375 goal to eliminate or mitigate all significant threats to public health and the environment;
- Effectively remove "consequential" amounts of NYS listed hazardous waste in accordance with 6 NYCRR Part 375;
- Comply with all TSCA low occupancy PCB Remediation cleanup requirements; and
- Comply with removing impacted media exceeding the chemical-specific SCGs.

5.3.3 Long Term Effectiveness and Permanence

Remedial Alternative 3 provides long-term effectiveness through the permanent removal of PCB-impacted sewer sediment and water. All material would be transferred to an offsite disposal facility equipped to properly manage this material.

5.3.4 Reduction of Toxicity, Mobility, or Volume

Remedial Alternative 3 would remove hazardous concentrations of PCBs in the near term and alleviate mobility concerns. Sediment removal and sewer cleaning would effectively reduce the toxicity, mobility, and volume of sediment with PCB concentrations exceeding the Yard soil cleanup levels. As demonstrated by the OU-5 RI, PCB-impacted sewer water is attributed to suspended sediment in the water samples. Therefore, the toxicity, mobility, and volume of impacted sewer water will also be reduced via sediment removal and sewer cleaning.

5.3.5 Short-Term Impacts and Effectiveness

A moderate level of short-term effects to remedial workers during sewer cleaning activities is associated with this remedial alternative. Remedial workers will be required to perform confined space entry and will be in direct contact with sewer water, sediment, and vapors. Health and safety concerns would be reduced through verification that all remedial workers possess up to date confined space entry training, personal protective equipment is used at all times (e.g., safety harnesses, respiratory protection), and use of mechanical equipment for cleaning as much as possible. A limited scope CAMP would be employed to monitor VOCs at the work area and site perimeter.

This alternative poses little to no short term risks to community. Waste materials will be contained in tanks or within vacuum trucks upon removal and throughout the transportation process to the disposal facility.

5.3.6 Implementability

The sewer cleaning methods to be used for this remedial alternative are readily available. Experienced remedial contractors, specialized sewer contractors, and mechanical equipment are readily available to implement the remedial activities associated with this alternative.

Implementability concerns that do exist for this remedial alternative include access to MH-38 and MH-40. Personnel confined space access will most likely be required for cleanout of these manholes. Since the primary sewer system is a combined sewer system, there is the potential to encounter a significant volume of combined waste, which increases health and safety precautions. Although it is expected that mechanical equipment will be used for waste

removal, vapors may be present causing an increased time to perform the work and increased personnel to account for shorter shifts while performing confined space entry work.

Access agreements would be required for cleaning of MH-40. Without an access agreement with MTA and possibly an off-site 3rd party that allows a significant amount of work space for equipment and personnel, cleaning of this manhole in the near-term will not be possible. MH-38 is located within the body tracks. A significant level of coordination with Amtrak's Track Department will be required to arrange for trains to be removed from this area and ensure no damage to the tracks occurs during the cleaning. Mobilizing cleaning equipment to MH-38 will also require a significant amount of coordination and possibly mandate the use of specialized equipment (e.g., transport equipment via rail).

5.3.7 Cost

The estimated capital cost to implement Remedial Alternative 3 is $946,976. This capital cost consists of the sewer manhole monitoring plan and sewer manhole of concern cleaning.

5.4 Comparison of Remedial Alternatives

The NCP and the NYSDEC regulation and guidance on the selection of remedial alternatives for inactive hazardous waste disposal sites require that the seven evaluation criteria be used to individually evaluate the remedial action alternatives and also evaluate comparatively to identify advantages and disadvantages of each alternative relative one another (NYSDEC, 1990 and NYSDEC, 2010).

The NCP and the NYSDEC guidance also require that alternatives be evaluated based on community acceptance. In accordance with NYSDEC guidance, alternatives are evaluated for community acceptance after the public comment period.

With the exception of the timing of cleaning of MH-38 and MH-40, Remedial Alternative 2 and 3 are very similar in their approach. Therefore, an in-depth comparison of these two alternatives is not necessary and a tabular representation is provided to demonstrate the effect of the difference between the alternatives and a comparison to Remedial Alternative 1 – No Action. Alternative 3 provides a more immediate removal of PCB-impacted sediments posing a threat to

offsite migration within the sewer system compared to Alternative 2. Alternative 3 therefore, more fully satisfies the criteria of overall protection of the environment and reduction of toxicity and mobility.

Criteria	**Remedial Alternative 1**	**Remedial Alternative 2**	**Remedial Alternative 3**
Overall Protectiveness of Human Health and the Environment	*	**	***
Compliance with SCGs	*	***	***
Long Term Effectiveness and Permanence	*	***	***
Reduction of Toxicity, Mobility, or Volume	*	**	***
Short-Term Impact and Effectiveness	*	**	**
Implementability	*	**	**
Cost	$0	$967,414	$946,976

* – Does not satisfy Criteria
** – Moderately satisfies criteria
*** – Fully satisfies criteria

6.0 RECOMMENDED REMEDIAL ACTION ALTERNATIVE

The recommended remedial action alternative for OU-5 is Remedial Alternative 3. Remedial Alternative 3 would achieve each of the established RAOs. PCB-impacted sediment exhibiting hazardous concentrations would be immediately removed. Cleanout of MH-40 would mitigate concerns of offsite migration. The sewer monitoring plan would identify any reoccurrence of sediment at MH-40. Ultimately, media exceeding the chemical-specific SCGs would be removed following the OU-3 and OU-4 remediation and ESA construction. Throughout the OU-5 remediation schedule, there is little to no risk of human exposure to impacted media.

Remedial Alternative 3 poses moderate but manageable short-term impacts to remedial contractors, is administratively feasible, and comparatively implementable. Lastly, Remedial Alternative 3 is protective to human health and the environment and although the most comprehensive alternative, is still a cost effective alternative.

7.0 REFERENCES

NYSDEC, 2010. DER-10 Technical Guidance for Site Investigation and Remediation, May 2010.

NYSDEC, 2006. 6 NYCRR Part 375 Environmental Remediation Programs, Subparts 375-1 to 375-4 and 375-6, Effective December 14, 2006.

NYSDEC, 2007. DER-15: Presumptive/Proven Remedial Technologies, February 27, 2007.

Roux Associates, 1992. Phase I Remedial Investigation, Sunnyside Yard, Queens, New York, January 22, 1992. Volumes I through III.

Roux Associates, 1995. Phase II Remedial Investigation, Sunnyside Yard, Queens, New York, February 15, 1995.

Roux Associates, 2011a. Revised Remedial Design/Remedial Action Work Plan for Operable Unit 3, Sunnyside Yard, Queens, New York, July 26, 2011.

Roux Associates, 2011b. Operable Unit 5 Remedial Investigation Report, Sunnyside Yard, Queens, New York, August 30, 2011.USEPA, 1988a. CERCLA Compliance with Other Laws Manual: Interim Final, August 1988.

USEPA, 1988b. Guidance for Conducting Remedial Investigations and Feasibility Studies under CERCLA, Interim Final, EPA 540/G-89 004, October 1988.

USEPA, 1994. National Oil and Hazardous Substances Pollution Contingency Plan, 40 CFR 300 – Final Rule, March 8, 1990.

USEPA, 2000. A Guide to Developing and Documenting Cost Estimates During Feasibility Study, EPA 540-R-00-002, July 2000.

Table 1. Action and Chemical-Specific SCGs, OU-5 FS Report
Sunnyside Yard, Queens, New York

Citation	Title	Description	SCG Type
NEW YORK STATE SCGs			
6 NYCRR Subparts 375-1 and 375-2	Environmental Remediation Programs - Inactive Hazardous Waste Sites	Provides general requirements and IHWDS remedial program requirements and procedures for developing RAOs and remedy selection.	Action
6 NYCRR Subpart 375-6	Remedial Program Soil Cleanup Objectives	Establishes the soil cleanup objectives for restricted industrial sites. The Yard soil cleanup level for lead is based on the Restricted Industrial cleanup level.	Chemical
Amtrak Sunnyside Yard, OU-4 Record of Decision	Modifies NYSDEC recommended Soil Cleanup Levels for COCs	Current Yard soil cleanup levels for the COCs.	Chemical
FEDERAL SCGs			
NCP, 40 CFR 300.430	Remedial Investigation/Feasibility Study and Selection of Remedy	Establishes procedures and requirements in developing the RAOs and remedy selection.	Action
TSCA, 40 CFR 761.61	PCB Remediation Waste	This standard sets the cleanup levels and the treatment, storage and disposal requirements of PCB-impacted material.	Action, Chemical
29 CFR 1910	Occupational Safety and Health Standards	This regulation will be applicable and relevant to any selected remedy.	Action
29 CFR 1926	Occupational Safety and Health	This regulation will be applicable and relevant to any selected remedy.	Action
LOCAL SCGs			
RCNY Titles 1,15,16	Rules of the City of New York		Action
GUIDANCE			
NYSDOH Generic CAMP for Ground Intrusive Activities	Generic Community Air Monitoring Protocol	Would relate to intrusive remedial actions.	Action
NYSDEC DER-10	Technical Guidance for Site Investigation and Remediation	Guidance provides procedures for developing RAOs, remedial alternative screening and selection.	Action

Glossary of Acronyms

CFR	Code of Federal Regulations
NYSDEC	New York State Department of Environmental Conservation
NYCRR	New York Code of Rules and Regulations
OSHA	Occupational Safety and Health
SCG	Standards, Criteria, and Guidance
USEPA	United States Environmental Protection Agency
DER	Department of Environmental Remediation

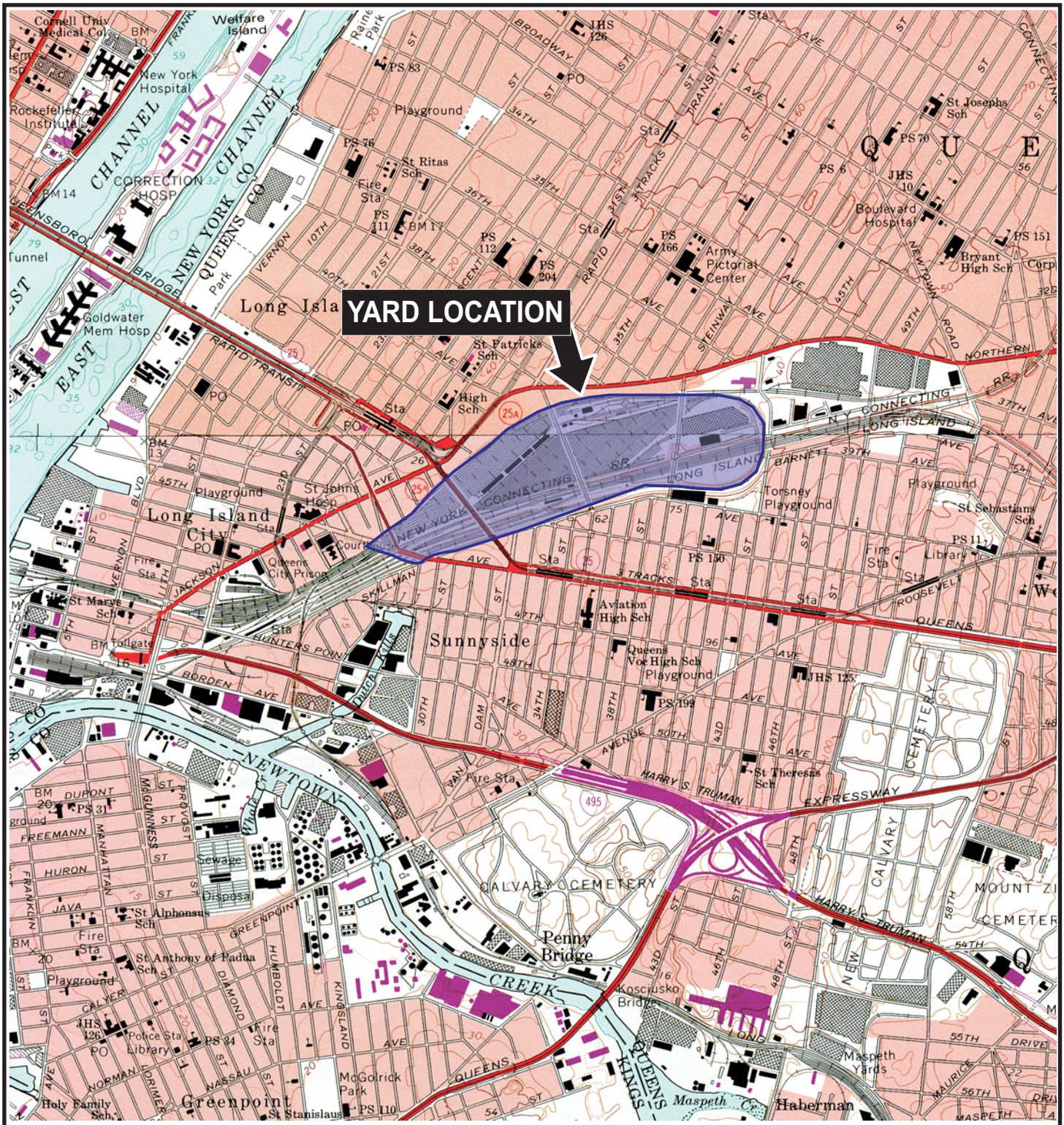

SOURCE:
CENTRAL PARK AND BROOKLYN, NEW YORK
QUADRANGLE 7.5 MINUTE SERIES (TOPOGRAPHIC)

QUADRANGLE LOCATION

N

0 2000'

Title:

LOCATION OF SITE

OU-5 FEASIBILITY STUDY

Prepared for:

AMTRAK

ROUX
ROUX ASSOCIATES, INC.
Environmental Consulting & Management

Compiled by: H.G.	Date: 17NOV11	FIGURE
Prepared by: J.A.D.	Scale: AS SHOWN	1
Project Mgr.: H.G.	Project No.: 0055.0050Y006	
File: 0055.0050Y125.05.CDR		

V:\CAD\PROJECTS\0055Y\0050Y\125\0055.0050Y125.05.CDR

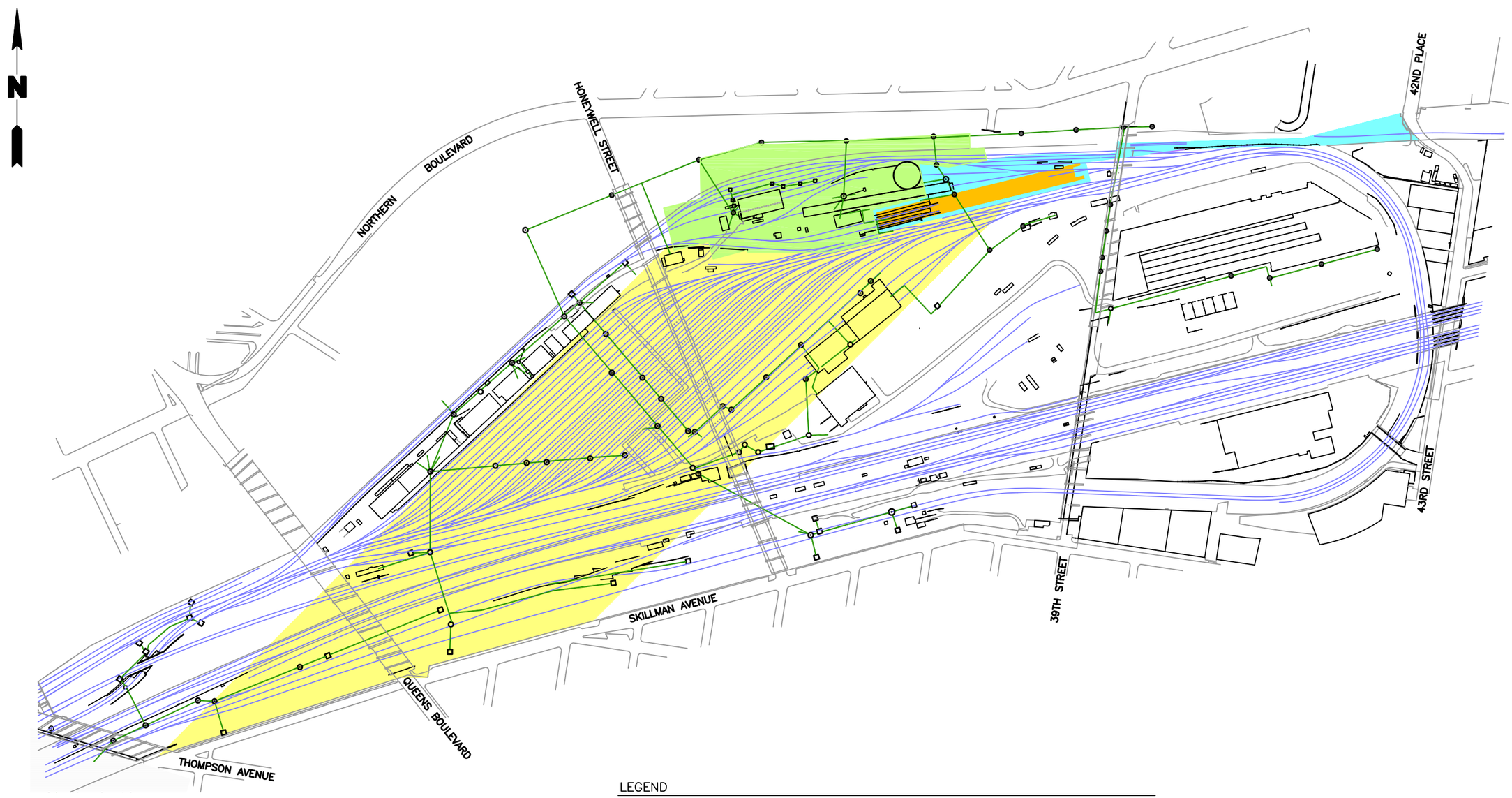

NOTES

1. LOCATIONS OF SEWER COMPONENTS BASED UPON A REVIEW OF AMTRAK–SUPPLIED ENGINEERING DIAGRAMS AND LIMITED FIELD SURVEY.
2. OU–6, GROUNDWATER BENEATH THE YARD (UNDERLIES ALL OTHER OU's)
3. LIRR – LONG ISLAND RAIL ROAD

LEGEND

- LOCATION OF RAILROAD TRACK
- APPROXIMATE LOCATION OF SEWER
- GRATE COVER CATCH BASIN LOCATION
- SOLID COVER MANHOLE LOCATION
- GRATE COVER MANHOLE LOCATION
- APPROXIMATE PROPERTY BOUNDARY

- OU–1
- OU–2
- OU–3
- OU–4
- OU–5

OU–6, GROUNDWATER BENEATH THE YARD (UNDERLIES ALL OTHER OU's)

400' 0 400'

Title:

AMTRAK YARD LAYOUT

OU–5 FEASIBILITY STUDY

Prepared For:

AMTRAK

ROUX

ROUX ASSOCIATES, INC.
Environmental Consulting and Management

Compiled by: H.G.	Date: 29NOV11	FIGURE
Prepared by: J.A.D.	Scale: AS SHOWN	2
Project Mgr: H.G.	Project: 0055.0050Y006	
File: 0055.0050Y125.06.DWG		

V:\CAD\PROJECTS\0055Y\0050Y\125\0055.0050Y125.06.DWG

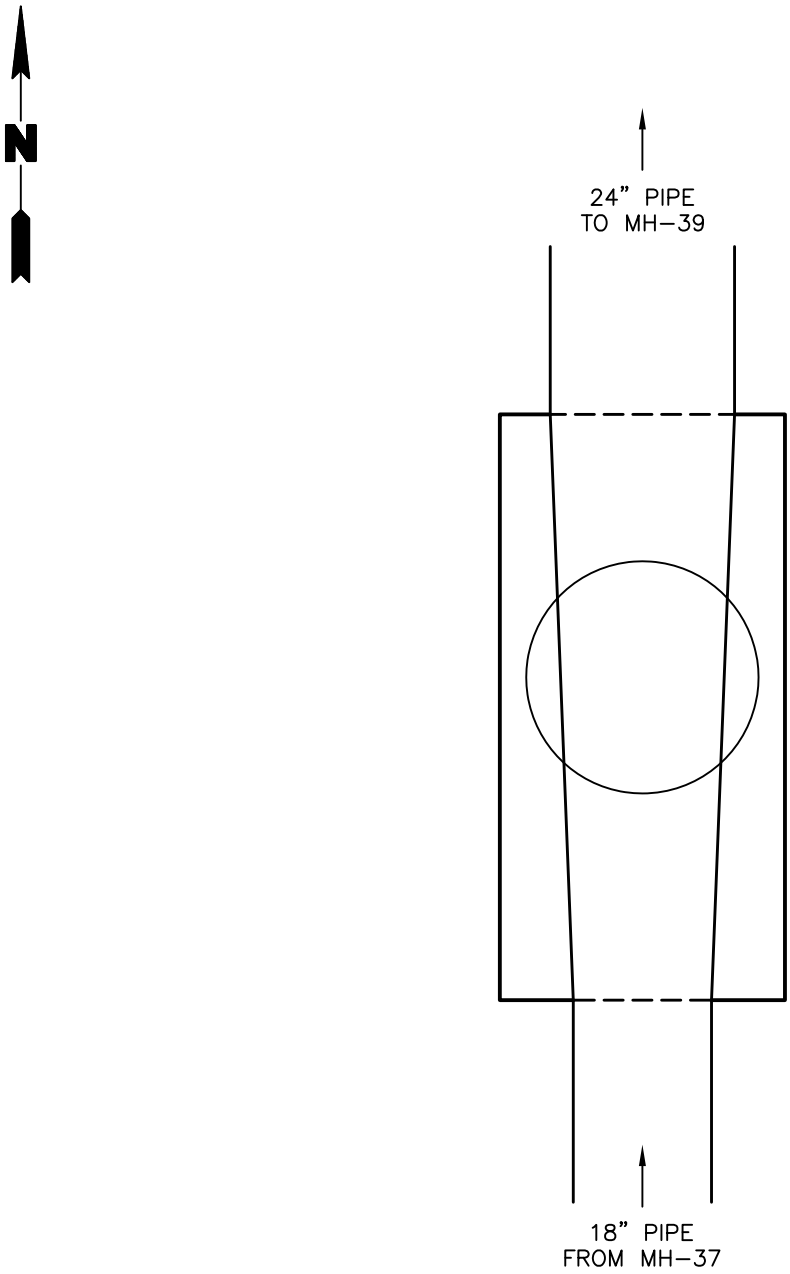

Title:

MH-38 PLAN VIEW

OU-5 FEASIBILITY STUDY

Prepared For:

AMTRAK

Remedial REMEDIAL ENGINEERING, P.C. *ENVIRONMENTAL ENGINEERS*	Compiled by: R.M.	Date: 17NOV11	FIGURE
	Prepared by: J.A.D.	Scale: NOT TO SCALE	3
	Project Mgr: H.G.	Project: 0055.0050Y006	
	File: 0055.0050Y125.03.DWG		

V:\CAD\PROJECTS\0055Y\0050Y\125\0055.0050Y125.03.DWG

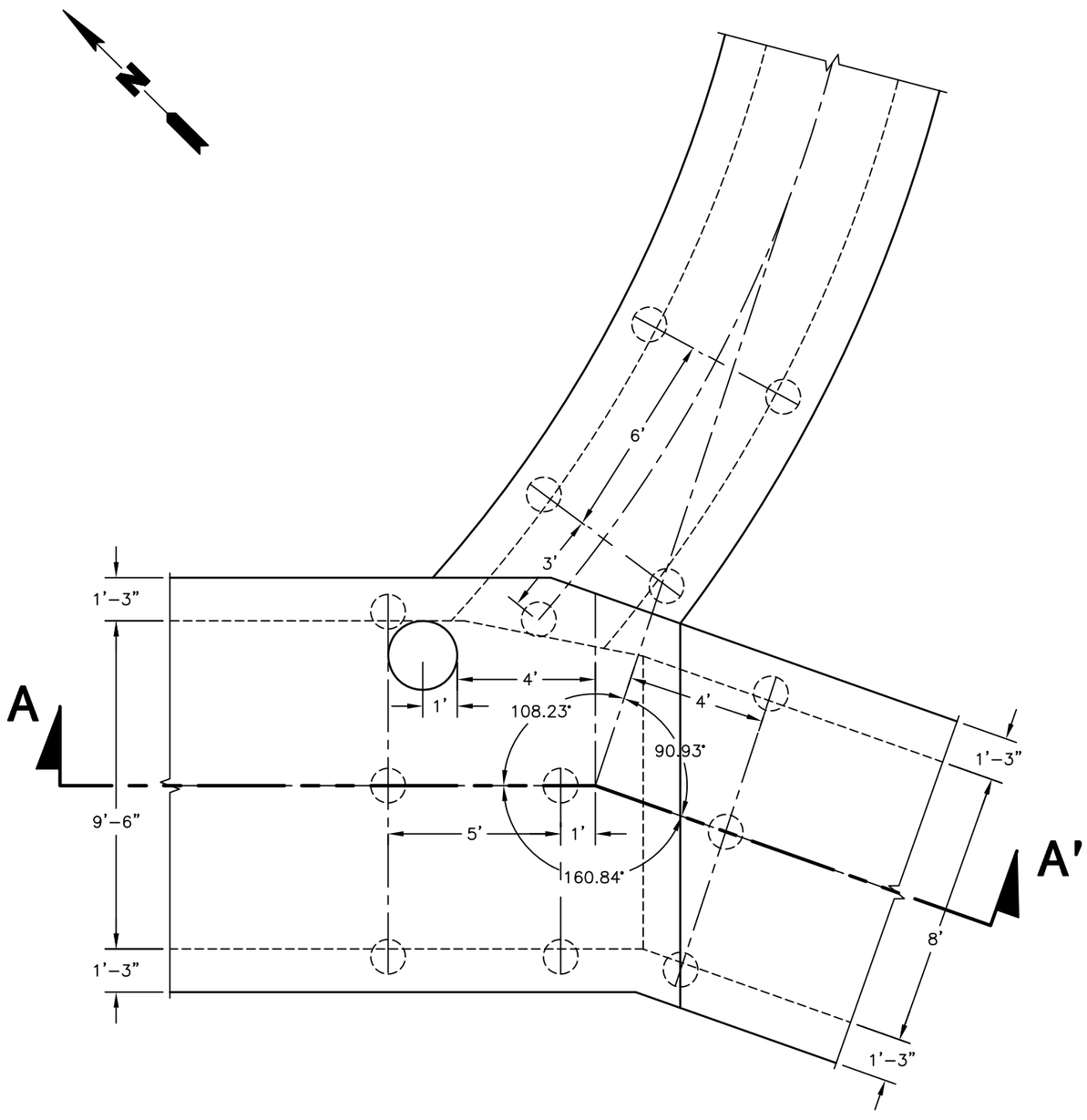

PLAN

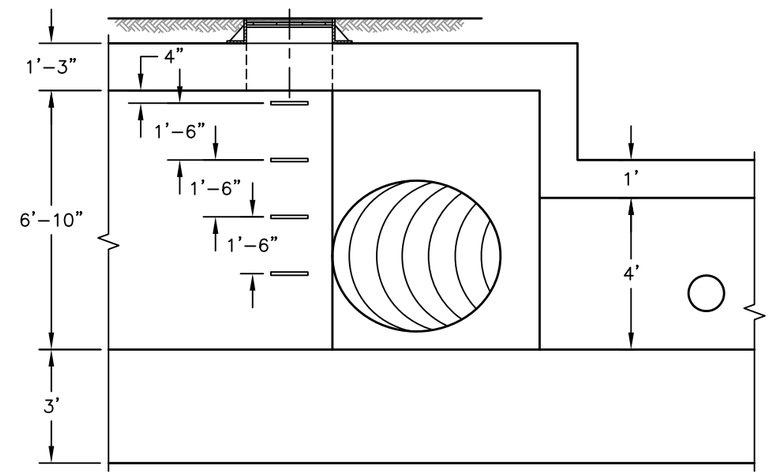

SECTION A–A'

Title: MH-40 DETAILS OU–5 FEASIBILITY STUDY			
Prepared For: AMTRAK			
Remedial REMEDIAL ENGINEERING, P.C. ENVIRONMENTAL ENGINEERS	Compiled by: R.M.	Date: 17NOV11	FIGURE
	Prepared by: J.A.D.	Scale: NOT TO SCALE	4
	Project Mgr: H.G.	Project: 0055.0050Y006	
	File: 0055.0050Y125.02.DWG		

V:\CAD\PROJECTS\0055Y\0050Y\125\0055.0050Y125.02.DWG

APPENDIX A

Remedial Alternatives
Cost Estimation Tables

Table A1. Remedial Alternative 2 - Sewer System Monitoring and Sewer Manhole of Concern Cleanout
OU-5 Feasibility Study, Amtrak Sunnyside Yard, Queens, New York

Description	Quantity	Unit	Unit Cost	Total Cost
MH-40 Cleanout (3 Cleanout Events)				
Removal and off-site disposal of sediment from within MH-40. Water will also be removed, contained and transported off-site for disposal during cleanout events. Concrete manhole structure will be cleaned during each cleanout event.				
Removal and containment of sediment and water	1	LS	$36,000	$36,000
Jetting of manhole structure	1	LS	$2,250	$2,250
Sewer Water Bypass During Cleanout	1	LS	$25,000	$25,000
Frac tank rental (20 Days)	1	LS	$1,765	$1,765
Decontamination of frac tank, and vacuum equipment	1	LS	$9,000	$9,000
T&D PCB Hazardous Sediment (> 50 ppm)	60	Drum	$895	$53,700
T&D of non-hazardous water	20000	Gal	$1	$20,000
Waste Characterization Sampling	4	Each	$750	$3,000
Subtotal Per Cleanout				$150,715
Subtotal for 3 Cleanouts				**$452,145**

MH-38 Cleanout (1 Cleanout Event)				
Removal and off-site disposal of sediment and water from within MH-38. Concrete manhole structure will be cleaned during cleanout event.				
Removal and containment of sediment and water	1	LS	$1,000	$1,000
Jetting of manhole structure	1	LS	$1,000	$1,000
Decontamination of vacuum equipment	1	LS	$6,000	$6,000
T&D PCB Hazardous Sediment (> 50 ppm)	16	Drum	$895	$14,320
T&D of non-hazardous water	500	Gal	$1	$500
Waste Characterization Sampling	2	Each	$750	$1,500
Subtotal				**$24,320**

Subtotal Direct Costs	$476,465
Mobilization/Demobilization (10%)	$47,647
Contingency (30%)	$142,940
TOTAL DIRECT COSTS	***$667,051***
Project Management (6%)	$40,023
Remedial Design (8%)	$53,364
Construction Management (8%)	$53,364
Track and ET Dept. Coordination (10%)	$66,705
Community Air Monitoring (7%)	$46,694
TOTAL INDIRECT COSTS	***$260,150***
TOTAL CAPITAL COSTS	**$927,201**

FUTURE COSTS				
Sewer System Monitoring (5 Monitoring Events Prior to First Cleanout, and 5 Monitoring Events Following First Cleanout)				
Includes sampling, laboratory analysis, data validation, and reporting at MH-40 every two years. During each monitoring event, samples of sewer sediment and sewer water will be collected during dry conditions, and post-precipitation conditions. In addition, this includes the preparation of Construction Completion Reports (CCRs) for manhole cleanout activities.				
Completion of Sewer System Monitoring (MH-40) and associated reporting (10 Rounds)	1	LS	$40,213	$40,213
Subtotal				**$40,213**

TOTAL PRESENT WORTH OF MONITORING COSTS	**$40,213**
TOTAL REMEDIAL ALTERNATIVE 2 COST	**$967,414**

Table A2. Remedial Alternative 3 - Cleaning of MH-38 and MH-40 and Sewer System Monitoring
OU-5 Feasibility Study, Amtrak Sunnyside Yard, Queens, New York

Description	Quantity	Unit	Unit Cost	Total Cost
MH-40 Cleanout (3 Cleanout Events)				
Removal and off-site disposal of sediment from within MH-40. Water will also be removed, contained and transported off-site for disposal during cleanout events. Concrete manhole structure will be cleaned during each cleanout event.				
Removal and containment of sediment and water	1	LS	$36,000	$36,000
Jetting of manhole structure	1	LS	$2,250	$2,250
Sewer Water Bypass During Cleanout	1	LS	$25,000	$25,000
Frac tank rental (20 Days)	1	LS	$1,765	$1,765
Decontamination of frac tank, and vacuum equipment	1	LS	$9,000	$9,000
T&D PCB Hazardous Sediment (> 50 ppm)	60	Drum	$895	$53,700
T&D of non-hazardous water	20000	Gal	$1	$20,000
Waste Characterization Sampling	4	Each	$750	$3,000
Subtotal Per Cleanout				$150,715
Subtotal for 3 Cleanouts				**$452,145**
MH-38 Cleanout (1 Cleanout Event)				
Removal and off-site disposal of sediment and water from within MH-38. Concrete manhole structure will be cleaned during cleanout event.				
Removal and containment of sediment and water	1	LS	$1,000	$1,000
Jetting of manhole structure	1	LS	$1,000	$1,000
Decontamination of vacuum equipment	1	LS	$6,000	$6,000
T&D PCB Hazardous Sediment (> 50 ppm)	16	Drum	$895	$14,320
T&D of non-hazardous water	500	Gal	$1	$500
Waste Characterization Sampling	2	Each	$750	$1,500
Subtotal				**$24,320**

Subtotal Direct Costs	$476,465
Mobilization/Demobilization (10%)	$47,647
Contingency (30%)	$142,940
TOTAL DIRECT COSTS	***$667,051***
Project Management (6%)	$40,023
Remedial Design (8%)	$53,364
Construction Management (8%)	$53,364
Track and ET Dept. Coordination (10%)	$66,705
Community Air Monitoring (7%)	$46,694
TOTAL INDIRECT COSTS	***$260,150***
TOTAL CAPITAL COSTS	**$927,201**

FUTURE COSTS				
Sewer System Monitoring (5 Monitoring Events following First Cleanout)				
Includes sampling, laboratory analysis, data validation, and reporting at MH-40 every two years for a period of 10 years. During each monitoring event, samples of sewer sediment and sewer water will be collected during dry conditions, and post-precipitation conditions. In addition, this includes the preparation of Construction Completion Reports (CCRs) for MH-40 cleanout activities.				
Completion of Sewer System Monitoring (MH-40) and associated reporting (5 Rounds)	1	LS	$19,775	$19,775
Subtotal				**$19,775**

TOTAL PRESENT WORTH OF MONITORING COSTS	**$19,775**
TOTAL REMEDIAL ALTERNATIVE 3 COST	**$946,976**

APPENDIX B

Data Summary Tables for Polychlorinated Biphenyls in Sewer Sediment and Sewer Water from Samples Collected within the Primary and Secondary Sewer Systems

B-1. Summary of Polychlorinated Biphenyl Compound Concentrations in Sewer-Sediment Samples Collected in the Primary Sewer System, Sunnyside Yard, Queens, New York

B-2. Summary of Polychlorinated Biphenyl Concentrations in Sewer-Water Samples Collected in the Primary Sewer System, Sunnyside Yard, Queens, New York

B-3. Summary of Polychlorinated Biphenyl Compound Concentrations in Sewer-Sediment Samples Collected in the Secondary Sewer System, Sunnyside Yard, Queens, New York

B-4. Summary of Polychlorinated Biphenyl Concentrations in Sewer-Water Samples Collected in the Secondary Sewer System, Sunnyside Yard, Queens, New York

Table B-1. Summary of Polychlorinated Biphenyl Compound Concentrations in Sewer-Sediment Samples Collected in the Primary Sewer System, Sunnyside Yard, Queens, New York

Parameter (Concentrations in µg/kg)	Site-Specific Cleanup Level	**Sample Designation:** **Sample Date:** **Location:**	CB-4 11/12/1996	MHS-2 2/9/1993	MHS-2 4/26/1994	MHS-2DL 7/26/1996	MH-2 11/12/1996	MHS-2* 10/12/2010 Pipe From MH-41
Aroclor-1016	--		2000 U	5400 U	1200 U	5300 U	2200 U	39 U
Aroclor-1221	--		4000 U	11000 U	1200 U	11000 U	4400 U	39 U
Aroclor-1232	--		2000 U	5400 U	1200 U	5300 U	2200 U	39 U
Aroclor-1242	--		2000 U	5400 U	1200 U	5300 U	2200 U	39 U
Aroclor-1248	--		590 J	5400 U	2000 J	6100	660 J	39 U
Aroclor-1254	--		4200	24000 V	2400 U	11000 D	3100	39 U
Aroclor-1260	--		2600	58000 V	9900 J	37000 D	5000	1800
Aroclor-1262	--		NA	NA	NA	NA	NA	39 U
Aroclor-1268	--		NA	NA	NA	NA	NA	39 U
Total PCBs	25000		7390	**82000**	11900	**54100**	8760	1800

J - Estimated value
U - Indicates that the compound was analyzed for but not detected
V – Qualifier added and/or value altered during validation
D - Compound identified in an analysis at a secondary dilution
NA - Not analyzed for by laboratory
µg/kg - Micrograms per kilogram
PCBs - Polychlorinated Biphenyls
Bolded results indicate that the compound exceeds the Site-Specific Cleanup Levels
* - Sample designation edited to include "S" to reflect sample is a sediment matrix

Table B-1. Summary of Polychlorinated Biphenyl Compound Concentrations in Sewer-Sediment Samples Collected in the Primary Sewer System, Sunnyside Yard, Queens, New York

Parameter (Concentrations in µg/kg)	Site-Specific Cleanup Level	**Sample Designation:**	MHS-2*	MHS-2	MHS-2	MHS-2
		Sample Date:	10/12/2010	3/16/2011	3/16/2011	3/17/2011
		Location:	Pipe From MH-55	Pipe From MH-41	Pipe From MH-55	Pipe From MH-41
Aroclor-1016	--		35 U	63 U	38 U	32 U
Aroclor-1221	--		35 U	63 U	38 U	32 U
Aroclor-1232	--		35 U	63 U	38 U	32 U
Aroclor-1242	--		35 U	63 U	38 U	32 U
Aroclor-1248	--		35 U	63 U	38 U	32 U
Aroclor-1254	--		35 U	63 U	38 U	32 U
Aroclor-1260	--		510	1200	2600 JV	920
Aroclor-1262	--		35 U	63 U	38 U	32 U
Aroclor-1268	--		35 U	63 U	38 U	32 U
Total PCBs	25000		510	1200	2600 JV	920

J - Estimated value
U - Indicates that the compound was analyzed for but not detected
V – Qualifier added and/or value altered during validation
D - Compound identified in an analysis at a secondary dilution
NA - Not analyzed for by laboratory
µg/kg - Micrograms per kilogram
PCBs - Polychlorinated Biphenyls
Bolded results indicate that the compound exceeds the Site-Specific Cleanup Levels
* - Sample designation edited to include "S" to reflect sample is a sediment matrix

Table B-1. Summary of Polychlorinated Biphenyl Compound Concentrations in Sewer-Sediment Samples Collected in the Primary Sewer System, Sunnyside Yard, Queens, New York

Parameter (Concentrations in µg/kg)	Site-Specific Cleanup Level	**Sample Designation:**	MHS-2	MHS-3	MH-3	MHS-3	MHS-3*	MH-5	MHS-6*
		Sample Date:	3/17/2011	2/8/1993	11/13/1996	3/11/1997	10/11/2010	11/13/1996	10/11/2010
		Location:	Pipe From MH-55						
Aroclor-1016	--		34 U	4100 U	8100 U	210 U	36 U	8900 U	4000 U D
Aroclor-1221	--		34 U	8400 U	16000 U	420 U	36 U	18000 U	4000 U D
Aroclor-1232	--		34 U	4100 U	8100 U	210 U	36 U	8900 U	4000 U D
Aroclor-1242	--		34 U	3000 JV	8100 U	210 U	36 U	8900 U	4000 U D
Aroclor-1248	--		34 U	4100 U	2500 J	210 U	36 U	8900 U	4000 U D
Aroclor-1254	--		1100	29000 V	17000	520	36 U	16000	4000 U D
Aroclor-1260	--		34 U	22000 V	13000	860	36 U	2800 J	120000 D
Aroclor-1262	--		34 U	NA	NA	NA	36 U	NA	4000 U D
Aroclor-1268	--		34 U	NA	NA	NA	36 U	NA	4000 U D
Total PCBs	25000		1100	**54000**	**32500**	1380	0	18800	**120000**

J - Estimated value
U - Indicates that the compound was analyzed for but not detected
V – Qualifier added and/or value altered during validation
D - Compound identified in an analysis at a secondary dilution
NA - Not analyzed for by laboratory
µg/kg - Micrograms per kilogram
PCBs - Polychlorinated Biphenyls
Bolded results indicate that the compound exceeds the Site-Specific Cleanup Levels
* - Sample designation edited to include "S" to reflect sample is a sediment matrix

Table B-1. Summary of Polychlorinated Biphenyl Compound Concentrations in Sewer-Sediment Samples Collected in the Primary Sewer System, Sunnyside Yard, Queens, New York

Parameter (Concentrations in µg/kg)	Site-Specific Cleanup Level	**Sample Designation:** **Sample Date:** **Location:**	MHS-6 3/16/2011	MHS-6 3/17/2011	MHS-8DL 2/9/1993	MH-8 11/12/1996	MHS-8 3/16/2011	MH-11 3/11/1997	MHS-11* 10/11/2010	MHS-11 3/16/2011
Aroclor-1016	--		37 U	36 U	430 U	39 U	45 U	2100 U	33 U	33 U
Aroclor-1221	--		37 U	36 U	870 U	79 U	45 U	4300 U	33 U	33 U
Aroclor-1232	--		37 U	36 U	430 U	39 U	45 U	2100 U	33 U	33 U
Aroclor-1242	--		740 UV	720 UV	430 U	39 U	45 U	2100 U	33 U	33 U
Aroclor-1248	--		740 UV	720 UV	430 U	39 U	45 U	2100 U	33 U	33 U
Aroclor-1254	--		740 UV	720 UV	1300 JV	40	45 U	2100 U	33 U	33 U
Aroclor-1260	--		21000	15000 JV	2900 V	100	45 U	1000 J	520	500
Aroclor-1262	--		37 U	36 U	NA	NA	45 U	NA	33 U	33 U
Aroclor-1268	--		37 U	36 U	NA	NA	45 U	NA	33 U	33 U
Total PCBs	25000		21000	15000 JV	4200	140	0	1000	520	500

J - Estimated value
U - Indicates that the compound was analyzed for but not detected
V – Qualifier added and/or value altered during validation
D - Compound identified in an analysis at a secondary dilution
NA - Not analyzed for by laboratory
µg/kg - Micrograms per kilogram
PCBs - Polychlorinated Biphenyls
Bolded results indicate that the compound exceeds the Site-Specific Cleanup Levels
* - Sample designation edited to include "S" to reflect sample is a sediment matrix

Table B-1. Summary of Polychlorinated Biphenyl Compound Concentrations in Sewer-Sediment Samples Collected in the Primary Sewer System, Sunnyside Yard, Queens, New York

Parameter (Concentrations in µg/kg)	Site-Specific Cleanup Level	**Sample Designation:** **Sample Date:** **Location:**	MHS-11 3/17/2011	MHS-29 4/27/1994	MHS-35 4/28/1994	MHS-37 4/28/1994	MH-37 11/12/1996	MHS-38* 10/12/2010	MHS-38 3/16/2011	MHS-38 3/17/2011
Aroclor-1016	--		33 U	100 U	170 U	510 U	8400 U	350 U D	31 U	35 U
Aroclor-1221	--		33 U	100 U	170 U	510 U	17000 U	350 U D	31 U	35 U
Aroclor-1232	--		33 U	100 U	170 U	510 U	8400 U	350 U D	31 U	35 U
Aroclor-1242	--		33 U	100 U	700	510 U	8400 U	350 U D	620 UV	1800 UV
Aroclor-1248	--		33 U	100 U	170 U	510 U	8400 U	350 U D	620 UV	1800 UV
Aroclor-1254	--		33 U	200 U	340 U	1000 U	7000 J	350 U D	620 UV	1800 UV
Aroclor-1260	--		380	170 J	250 J	9400	31000	7800 D	30000	83000 JV
Aroclor-1262	--		33 U	NA	NA	NA	NA	350 U D	31 U	35 U
Aroclor-1268	--		33 U	NA	NA	NA	NA	350 U D	31 U	35 U
Total PCBs	25000		380	170	950	9400	**38000**	7800	**30000**	**83000 JV**

J - Estimated value
U - Indicates that the compound was analyzed for but not detected
V – Qualifier added and/or value altered during validation
D - Compound identified in an analysis at a secondary dilution
NA - Not analyzed for by laboratory
µg/kg - Micrograms per kilogram
PCBs - Polychlorinated Biphenyls
Bolded results indicate that the compound exceeds the Site-Specific Cleanup Levels
* - Sample designation edited to include "S" to reflect sample is a sediment matrix

Table B-1. Summary of Polychlorinated Biphenyl Compound Concentrations in Sewer-Sediment Samples Collected in the Primary Sewer System, Sunnyside Yard, Queens, New York

Parameter (Concentrations in µg/kg)	Site-Specific Cleanup Level	**Sample Designation:**	MHS-40	MHS-40	MHS-40	MH-40	MHS-40*	MHS-40	MHS-40	MHS-42
		Sample Date:	4/25/1994	4/25/1994	7/26/1996	11/13/1996	10/12/2010	3/16/2011	3/17/2011	4/26/1994
		Location:	(48) E	(4x8) S						
Aroclor-1016	--		1000 U	1000 U	8000 U	46000 U	31 U	33 U	30 U	2100 U
Aroclor-1221	--		1000 U	1000 U	16000 U	94000 U	31 U	33 U	30 U	2100 U
Aroclor-1232	--		1000 U	1000 U	8000 U	46000 U	31 U	33 U	30 U	2100 U
Aroclor-1242	--		1000 U	1000 U	8000 U	46000 U	31 U	33 U	30 U	2100 U
Aroclor-1248	--		5200 J	2100 J	4900 J	46000 U	31 U	33 U	30 U	13000 J
Aroclor-1254	--		2000 U	2000 U	34000	50000	31 U	33 U	30 U	4300 U
Aroclor-1260	--		11000 J	13000 J	110000	110000	31 UJV	65	130	38000 J
Aroclor-1262	--		NA	NA	NA	NA	31 U	33 U	30 U	NA
Aroclor-1268	--		NA	NA	NA	NA	31 U	33 U	30 U	NA
Total PCBs	25000		16200	15100	**148900**	**160000**	0	65	130	**51000**

J - Estimated value
U - Indicates that the compound was analyzed for but not detected
V – Qualifier added and/or value altered during validation
D - Compound identified in an analysis at a secondary dilution
NA - Not analyzed for by laboratory
µg/kg - Micrograms per kilogram
PCBs - Polychlorinated Biphenyls
Bolded results indicate that the compound exceeds the Site-Specific Cleanup Levels
* - Sample designation edited to include "S" to reflect sample is a sediment matrix

Table B-1. Summary of Polychlorinated Biphenyl Compound Concentrations in Sewer-Sediment Samples Collected in the Primary Sewer System, Sunnyside Yard, Queens, New York

Parameter (Concentrations in µg/kg)	Site-Specific Cleanup Level	**Sample Designation:** **Sample Date:** **Location:**	MHS-42DL 8/15/1996	MH-42 11/12/1996	MHS-42* 10/12/2010	MHS-42 3/16/2011	MHS-42 3/17/2011	MHS-45 4/28/1994	MHS-45* 10/11/2010
Aroclor-1016	--		33 U	2200 U	35 U	35 U	36 U	110 U	32 U
Aroclor-1221	--		67 U	4500 U	35 U	35 U	36 U	110 U	32 U
Aroclor-1232	--		33 U	2200 U	35 U	35 U	36 U	110 U	32 U
Aroclor-1242	--		33 U	2200 U	35 U	35 U	36 U	110 U	32 U
Aroclor-1248	--		33 U	2200 U	110	35 U	36 U	53 J	150 JV
Aroclor-1254	--		610	3100	35 U	35 U	1100 UV	700 J	32 U
Aroclor-1260	--		2000D	2300	1300	900	1200 JV	750 J	1900 JV
Aroclor-1262	--		NA	NA	35 U	35 U	36 U	NA	32 U
Aroclor-1268	--		NA	NA	35 U	35 U	36 U	NA	32 U
Total PCBs	25000		2610	5400	1410	900	1200 JV	1503	2050 JV

J - Estimated value
U - Indicates that the compound was analyzed for but not detected
V – Qualifier added and/or value altered during validation
D - Compound identified in an analysis at a secondary dilution
NA - Not analyzed for by laboratory
µg/kg - Micrograms per kilogram
PCBs - Polychlorinated Biphenyls
Bolded results indicate that the compound exceeds the Site-Specific Cleanup Levels
* - Sample designation edited to include "S" to reflect sample is a sediment matrix

Table B-1. Summary of Polychlorinated Biphenyl Compound Concentrations in Sewer-Sediment Samples Collected in the Primary Sewer System, Sunnyside Yard, Queens, New York

Parameter (Concentrations in µg/kg)	Site-Specific Cleanup Level	**Sample Designation:**	MHS-45	MHS-45	MHS-52	MH-52	MH-52	MHS-52*	MHS-52	MHS-52
		Sample Date:	3/16/2011	3/17/2011	4/26/1994	11/12/1996	3/11/1997	10/12/2010	3/16/2011	3/17/2011
		Location:								
Aroclor-1016	--		31 U	38 U	110 U	2300 U	8500 U	33 U	31 U	33 U
Aroclor-1221	--		31 U	38 U	110 U	4700 U	17000 U	33 U	31 U	33 U
Aroclor-1232	--		31 U	38 U	110 U	2300 U	8500 U	33 U	31 U	33 U
Aroclor-1242	--		31 U	38 U	110 U	2300 U	8500 U	33 U	31 U	33 U
Aroclor-1248	--		31 U	38 U	110 U	2300 U	8100 J	33 U	31 U	33 U
Aroclor-1254	--		31 U	38 U	1600 J	4300	34000	33 U	31 U	33 U
Aroclor-1260	--		180	600	1300 J	4300	49000	540	340	310
Aroclor-1262	--		31 UJV	38 U	NA	NA	NA	33 U	31 U	33 U
Aroclor-1268	--		31 UJV	38 U	NA	NA	NA	33 U	31 U	33 U
Total PCBs	25000		180	600	2900	8600	**91100**	540	340	310

J - Estimated value
U - Indicates that the compound was analyzed for but not detected
V – Qualifier added and/or value altered during validation
D - Compound identified in an analysis at a secondary dilution
NA - Not analyzed for by laboratory
µg/kg - Micrograms per kilogram
PCBs - Polychlorinated Biphenyls
Bolded results indicate that the compound exceeds the Site-Specific Cleanup Levels
* - Sample designation edited to include "S" to reflect sample is a sediment matrix

Table B-1. Summary of Polychlorinated Biphenyl Compound Concentrations in Sewer-Sediment Samples Collected in the Primary Sewer System, Sunnyside Yard, Queens, New York

Parameter (Concentrations in µg/kg)	Site-Specific Cleanup Level	**Sample Designation:**	MHS-55	MH-55	MHS-69	MHS-69	MH-69	MHS-69*	MHS-69
		Sample Date:	4/26/1994	11/12/1996	4/28/1994	4/28/1994	11/12/1996	10/12/2010	3/16/2011
		Location:			(18) NE	(36) E			
Aroclor-1016	--		1000 U	970 U	1100 U	2000 U	40 U	32 U	29 U
Aroclor-1221	--		1000 U	2000 U	1100 U	2000 U	82 U	32 U	29 U
Aroclor-1232	--		1000 U	970 U	1100 U	2000 U	40 U	32 U	29 U
Aroclor-1242	--		1000 U	970 U	1100 U	2000 U	40 U	32 U	29 U
Aroclor-1248	--		1000 U	500 J	1100 U	2000 U	40 U	32 U	29 U
Aroclor-1254	--		13000 J	2100	2100 U	4100 U	46	32 U	29 U
Aroclor-1260	--		12000 J	1700	4700	29000 J	99	72	53
Aroclor-1262	--		NA	NA	NA	NA	NA	32 U	29 U
Aroclor-1268	--		NA	NA	NA	NA	NA	32 U	29 U
Total PCBs	25000		25000	4300	4700	**29000**	145	72	53

J - Estimated value
U - Indicates that the compound was analyzed for but not detected
V – Qualifier added and/or value altered during validation
D - Compound identified in an analysis at a secondary dilution
NA - Not analyzed for by laboratory
µg/kg - Micrograms per kilogram
PCBs - Polychlorinated Biphenyls
Bolded results indicate that the compound exceeds the Site-Specific Cleanup Levels
* - Sample designation edited to include "S" to reflect sample is a sediment matrix

Table B-1. Summary of Polychlorinated Biphenyl Compound Concentrations in Sewer-Sediment Samples Collected in the Primary Sewer System, Sunnyside Yard, Queens, New York

Parameter (Concentrations in µg/kg)	Site-Specific Cleanup Level	**Sample Designation:** **Sample Date:** **Location:**	MHS-69 3/17/2011
Aroclor-1016	--		30 U
Aroclor-1221	--		30 U
Aroclor-1232	--		30 U
Aroclor-1242	--		30 U
Aroclor-1248	--		30 U
Aroclor-1254	--		30 U
Aroclor-1260	--		76
Aroclor-1262	--		30 U
Aroclor-1268	--		30 U
Total PCBs	25000		76

J - Estimated value
U - Indicates that the compound was analyzed for but not detected
V – Qualifier added and/or value altered during validation
D - Compound identified in an analysis at a secondary dilution
NA - Not analyzed for by laboratory
µg/kg - Micrograms per kilogram
PCBs - Polychlorinated Biphenyls
Bolded results indicate that the compound exceeds the Site-Specific Cleanup Levels
* - Sample designation edited to include "S" to reflect sample is a sediment matrix

Table B-2. Summary of Polychlorinated Biphenyl Concentrations in Sewer-Water Samples Collected in The Primary Sewer System, Sunnyside Yard, Queens, New York

Parameter (Concentrations in µg/L)	NYCDEP Limitation for Effluent to Combined Sewers	**Sample Designation:** **Sample Date:** **Location:**	MHW-2 2/9/1993	MHW-2 4/26/1994 (4x8)N	MHWF-2 4/26/1994 (4x8)N	MHW-2 7/26/1996	MHWF-2 7/26/1996	MHW-2* 10/12/2010 Pipe From MH-41
Aroclor-1016	--		0.065 U	0.065 UJ	0.065 UJ	1.0 U	1.0 U	0.25 UV
Aroclor-1221	--		0.065 U	0.065 UJ	0.065 UJ	2.0 U	2.0 U	0.25 UV
Aroclor-1232	--		0.065 U	0.065 UJ	0.065 UJ	1.0 U	1.0 U	0.25 UV
Aroclor-1242	--		0.065 U	0.065 UJ	0.065 UJ	1.0 U	1.0 U	0.25 UV
Aroclor-1248	--		0.065 U	0.065 UJ	0.065 UJ	1.0 U	1.0 U	0.25 UV
Aroclor-1254	--		1.1 JV	0.23 J	0.065 UJ	0.084 J	1.0 U	0.25 UV
Aroclor-1260	--		1.2 JV	0.43 J	0.065 UJ	0.14	0.1	0.26
Aroclor-1262	--		NA	NA	NA	NA	NA	0.25 UV
Aroclor-1268	--		NA	NA	NA	NA	NA	0.25 UV
Total PCBs	1		**2.3**	0.66	0	0.224	0.1	0.26

J - Estimated value
U - Indicates that the compound was analyzed for but not detected
V – Qualifier added and/or value altered during validation
D - Compound identified in an analysis at a secondary dilution
NA - Not analyzed for by laboratory
µg/L - Micrograms per liter
NYCDEP - New York City Department of Environmental Protection
PCBs - Polychlorinated Biphenyls
Bolded results indicate that the compound exceeds the NYCDEP Limitation for Effluent to Combined Sewers
* - Sample designation edited to include "W" to indicate sample is a water matrix
F - Filtered sample

Table B-2. Summary of Polychlorinated Biphenyl Concentrations in Sewer-Water Samples Collected in The Primary Sewer System, Sunnyside Yard, Queens, New York

Parameter (Concentrations in µg/L)	NYCDEP Limitation for Effluent to Combined Sewers	**Sample Designation:** **Sample Date:** **Location:**	MHWF-2* 10/12/2010 Pipe From MH-41	MHW-2* 10/12/2010 Pipe From MH-55	MHWF-2* 10/12/2010 Pipe From MH-55	MHW-2 3/16/2011 Pipe From MH-41
Aroclor-1016	--		0.25 UV	0.25 UV	0.25 UV	0.27 U
Aroclor-1221	--		0.25 UV	0.25 UV	0.25 UV	0.27 U
Aroclor-1232	--		0.25 UV	0.25 UV	0.25 UV	0.27 U
Aroclor-1242	--		0.25 UV	0.25 UV	0.25 UV	0.27 U
Aroclor-1248	--		0.25 UV	0.25 UV	0.25 UV	0.27 U
Aroclor-1254	--		0.25 UV	0.25 UV	0.25 UV	0.27 U
Aroclor-1260	--		0.25 UV	0.22 JV	0.25 UV	0.84
Aroclor-1262	--		0.25 UV	0.25 UV	0.25 UV	0.27 U
Aroclor-1268	--		0.25 UV	0.25 UV	0.25 UV	0.27 U
Total PCBs	1		0	0.22 JV	0	0.84

J - Estimated value
U - Indicates that the compound was analyzed for but not detected
V – Qualifier added and/or value altered during validation
D - Compound identified in an analysis at a secondary dilution
NA - Not analyzed for by laboratory
µg/L - Micrograms per liter
NYCDEP - New York City Department of Environmental Protection
PCBs - Polychlorinated Biphenyls
Bolded results indicate that the compound exceeds the NYCDEP Limitation for Effluent to Combined Sewers
* - Sample designation edited to include "W" to indicate sample is a water matrix
F - Filtered sample

Table B-2. Summary of Polychlorinated Biphenyl Concentrations in Sewer-Water Samples Collected in The Primary Sewer System, Sunnyside Yard, Queens, New York

Parameter (Concentrations in µg/L)	NYCDEP Limitation for Effluent to Combined Sewers	**Sample Designation:** **Sample Date:** **Location:**	MHWF-2 3/16/2011 Pipe From MH-41	MHW-2 3/16/2011 Pipe From MH-55	MHWF-2 3/16/2011 Pipe From MH-55	MHW-2 3/17/2011 Pipe From MH-41
Aroclor-1016	--		0.28 U	0.26 U	0.27 U	0.26 U
Aroclor-1221	--		0.28 U	0.26 U	0.27 U	0.26 U
Aroclor-1232	--		0.28 U	0.26 U	0.27 U	0.26 U
Aroclor-1242	--		0.28 U	0.26 U	0.27 U	0.26 U
Aroclor-1248	--		0.28 U	0.26 U	0.27 U	0.26 U
Aroclor-1254	--		0.28 U	0.26 U	0.27 U	0.26 U
Aroclor-1260	--		0.28 U	0.72	0.27 U	0.26 U
Aroclor-1262	--		0.28 U	0.26 U	0.27 U	0.26 U
Aroclor-1268	--		0.28 U	0.26 U	0.27 U	0.26 U
Total PCBs	1		0	0.72	0	0

J - Estimated value
U - Indicates that the compound was analyzed for but not detected
V – Qualifier added and/or value altered during validation
D - Compound identified in an analysis at a secondary dilution
NA - Not analyzed for by laboratory
µg/L - Micrograms per liter
NYCDEP - New York City Department of Environmental Protection
PCBs - Polychlorinated Biphenyls
Bolded results indicate that the compound exceeds the NYCDEP Limitation for Effluent to Combined Sewers
* - Sample designation edited to include "W" to indicate sample is a water matrix
F - Filtered sample

Table B-2. Summary of Polychlorinated Biphenyl Concentrations in Sewer-Water Samples Collected in The Primary Sewer System, Sunnyside Yard, Queens, New York

Parameter (Concentrations in µg/L)	NYCDEP Limitation for Effluent to Combined Sewers	**Sample Designation:**	MHWF-2	MHW-2	MHWF-2	MHW-3	MHW-3
		Sample Date:	3/17/2011	3/17/2011	3/17/2011	2/8/1993	7/26/1996
		Location:	Pipe From MH-41	Pipe From MH-55	Pipe From MH-55		
Aroclor-1016	--		0.25 U	0.25 U	0.25 U	0.065 U	1.0 U
Aroclor-1221	--		0.25 U	0.25 U	0.25 U	0.065 U	2.0 U
Aroclor-1232	--		0.25 U	0.25 U	0.25 U	0.065 U	1.0 U
Aroclor-1242	--		0.25 U	0.25 U	0.25 U	0.065 U	1.0 U
Aroclor-1248	--		0.25 U	0.25 U	0.25 U	0.065 U	1.0 U
Aroclor-1254	--		0.25 U	0.25 U	0.25 U	0.32 UV	0.35
Aroclor-1260	--		0.25 U	0.25 U	0.25 U	0.31 UV	0.54
Aroclor-1262	--		0.25 U	0.25 U	0.25 U	NA	NA
Aroclor-1268	--		0.25 U	0.25 U	0.25 U	NA	NA
Total PCBs	1		0	0	0	0	0.89

J - Estimated value
U - Indicates that the compound was analyzed for but not detected
V – Qualifier added and/or value altered during validation
D - Compound identified in an analysis at a secondary dilution
NA - Not analyzed for by laboratory
µg/L - Micrograms per liter
NYCDEP - New York City Department of Environmental Protection
PCBs - Polychlorinated Biphenyls
Bolded results indicate that the compound exceeds the NYCDEP Limitation for Effluent to Combined Sewers
* - Sample designation edited to include "W" to indicate sample is a water matrix
F - Filtered sample

Table B-2. Summary of Polychlorinated Biphenyl Concentrations in Sewer-Water Samples Collected in The Primary Sewer System, Sunnyside Yard, Queens, New York

Parameter (Concentrations in µg/L)	NYCDEP Limitation for Effluent to Combined Sewers	**Sample Designation:** **Sample Date:** **Location:**	MHWF-3 7/26/1996	MHW-3* 10/11/2010	MHWF-3* 10/11/2010	MHW-3 3/16/2011	MHWF-3 3/16/2011	MHW-3 3/17/2011
Aroclor-1016	--		1.0 U	0.25 UV	0.25 UV	0.28 U	0.27 U	0.26 U
Aroclor-1221	--		2.0 U	0.25 UV	0.25 UV	0.28 U	0.27 U	0.26 U
Aroclor-1232	--		1.0 U	0.25 UV	0.25 UV	0.28 U	0.27 U	0.26 U
Aroclor-1242	--		1.0 U	0.25 UV	0.25 UV	0.28 U	0.27 U	0.26 U
Aroclor-1248	--		1.0 U	0.25 UV	0.25 UV	0.28 U	0.27 U	0.26 U
Aroclor-1254	--		1.0 U	0.25 UV	0.25 UV	0.28 U	0.27 U	0.26 U
Aroclor-1260	--		0.017 J	0.18 JV	0.25 UV	0.28 U	0.27 U	2.8
Aroclor-1262	--		NA	0.25 UV	0.25 UV	0.28 U	0.27 U	0.26 U
Aroclor-1268	--		NA	0.25 UV	0.25 UV	0.28 U	0.27 U	0.26 U
Total PCBs	1		0.017	0.18 JV	0	0	0	**2.8**

J - Estimated value
U - Indicates that the compound was analyzed for but not detected
V – Qualifier added and/or value altered during validation
D - Compound identified in an analysis at a secondary dilution
NA - Not analyzed for by laboratory
µg/L - Micrograms per liter
NYCDEP - New York City Department of Environmental Protection
PCBs - Polychlorinated Biphenyls
Bolded results indicate that the compound exceeds the NYCDEP Limitation for Effluent to Combined Sewers
* - Sample designation edited to include "W" to indicate sample is a water matrix
F - Filtered sample

Table B-2. Summary of Polychlorinated Biphenyl Concentrations in Sewer-Water Samples Collected in The Primary Sewer System, Sunnyside Yard, Queens, New York

Parameter (Concentrations in µg/L)	NYCDEP Limitation for Effluent to Combined Sewers	**Sample Designation:** **Sample Date:** **Location:**	MHWF-3 3/17/2011	MHW-5 2/8/1993	MHW-5 7/26/1996	MHW-6 2/8/1993	MHW-6 7/26/1996	MHW-6* 10/11/2010	MHWF-6* 10/11/2010
Aroclor-1016	--		0.25 U	0.065 U	1.0 U	0.067 U	1.0 U	0.25 UDV	0.25 UV
Aroclor-1221	--		0.25 U	0.065 U	2.0 U	0.067 U	2.0 U	0.25 UDV	0.25 UV
Aroclor-1232	--		0.25 U	0.065 U	1.0 U	0.067 U	1.0 U	0.25 UDV	0.25 UV
Aroclor-1242	--		0.25 U	0.065 U	1.0 U	0.067 U	1.0 U	0.25 UDV	0.25 UV
Aroclor-1248	--		0.25 U	0.065 U	1.0 U	0.067 U	1.0 U	0.25 UDV	0.25 UV
Aroclor-1254	--		0.25 U	0.065 U	0.034 J	0.48 UV	1.0 U	0.25 UDV	0.25 UV
Aroclor-1260	--		1.8	0.065 U	0.043 J	0.33 UV	0.015 J	83 D	0.25 UV
Aroclor-1262	--		0.25 U	NA	NA	NA	NA	0.25 UDV	0.25 UV
Aroclor-1268	--		0.25 U	NA	NA	NA	NA	0.25 UDV	0.25 UV
Total PCBs	1		**1.8**	0	0.077	0	0.015	**83**	0

J - Estimated value
U - Indicates that the compound was analyzed for but not detected
V – Qualifier added and/or value altered during validation
D - Compound identified in an analysis at a secondary dilution
NA - Not analyzed for by laboratory
µg/L - Micrograms per liter
NYCDEP - New York City Department of Environmental Protection
PCBs - Polychlorinated Biphenyls
Bolded results indicate that the compound exceeds the NYCDEP Limitation for Effluent to Combined Sewers
* - Sample designation edited to include "W" to indicate sample is a water matrix
F - Filtered sample

Table B-2. Summary of Polychlorinated Biphenyl Concentrations in Sewer-Water Samples Collected in The Primary Sewer System, Sunnyside Yard, Queens, New York

Parameter (Concentrations in µg/L)	NYCDEP Limitation for Effluent to Combined Sewers	**Sample Designation:** **Sample Date:** **Location:**	MHW-6 3/16/2011	MHWF-6 3/16/2011	MHW-6 3/17/2011	MHWF-6 3/17/2011	MHW-7 2/8/1993	MHW-8 2/9/1993	MHW-8* 10/11/2010
Aroclor-1016	--		0.25 U	0.27 U	0.25 U	0.25 U	0.32 U	0.33 U	0.25 UV
Aroclor-1221	--		0.25 U	0.27 U	0.25 U	0.25 U	0.32 U	0.33 U	0.25 UV
Aroclor-1232	--		0.25 U	0.27 U	0.25 U	0.25 U	0.32 U	0.33 U	0.25 UV
Aroclor-1242	--		0.25 U	0.27 U	0.25 U	0.25 U	0.32 U	0.33 U	0.25 UV
Aroclor-1248	--		0.25 U	0.27 U	0.25 U	0.25 U	2.6	0.33 U	0.25 UV
Aroclor-1254	--		0.25 U	0.27 U	0.25 U	0.25 U	5.9	9.6 JV	0.25 UV
Aroclor-1260	--		12	0.27 U	16 JV	0.25 U	6.3	11 JV	0.25 UV
Aroclor-1262	--		0.25 U	0.27 U	0.25 U	0.25 U	NA	NA	0.25 UV
Aroclor-1268	--		0.25 U	0.27 U	0.25 U	0.25 U	NA	NA	0.25 UV
Total PCBs	1		**12**	0	**16 JV**	0	**14.8**	**20.6 JV**	0

J - Estimated value
U - Indicates that the compound was analyzed for but not detected
V – Qualifier added and/or value altered during validation
D - Compound identified in an analysis at a secondary dilution
NA - Not analyzed for by laboratory
µg/L - Micrograms per liter
NYCDEP - New York City Department of Environmental Protection
PCBs - Polychlorinated Biphenyls
Bolded results indicate that the compound exceeds the NYCDEP Limitation for Effluent to Combined Sewers
* - Sample designation edited to include "W" to indicate sample is a water matrix
F - Filtered sample

Table B-2. Summary of Polychlorinated Biphenyl Concentrations in Sewer-Water Samples Collected in The Primary Sewer System, Sunnyside Yard, Queens, New York

Parameter (Concentrations in µg/L)	NYCDEP Limitation for Effluent to Combined Sewers	**Sample Designation:** **Sample Date:** **Location:**	MHWF-8* 10/11/2010	MHW-8 3/16/2011	MHWF-8 3/16/2011	MHW-8 3/17/2011	MHWF-8 3/17/2011	MHW-11* 10/11/2010
Aroclor-1016	--		0.25 UV	0.25 U	0.27 U	0.25 U	0.25 U	0.25 UV
Aroclor-1221	--		0.25 UV	0.25 U	0.27 U	0.25 U	0.25 U	0.25 UV
Aroclor-1232	--		0.25 UV	0.25 U	0.27 U	0.25 U	0.25 U	0.25 UV
Aroclor-1242	--		0.25 UV	0.25 U	0.27 U	0.25 U	0.25 U	0.25 UV
Aroclor-1248	--		0.25 UV	0.25 U	0.27 U	0.25 U	0.25 U	0.25 UV
Aroclor-1254	--		0.25 UV	0.25 U	0.27 U	0.25 U	0.25 U	0.25 UV
Aroclor-1260	--		0.25 UV	0.25 U	0.27 U	0.25 U	0.25 U	0.25 UV
Aroclor-1262	--		0.25 UV	0.25 U	0.27 U	0.25 U	0.25 U	0.25 UV
Aroclor-1268	--		0.25 UV	0.25 U	0.27 U	0.25 U	0.25 U	0.25 UV
Total PCBs	1		0	0	0	0	0	0

J - Estimated value
U - Indicates that the compound was analyzed for but not detected
V – Qualifier added and/or value altered during validation
D - Compound identified in an analysis at a secondary dilution
NA - Not analyzed for by laboratory
µg/L - Micrograms per liter
NYCDEP - New York City Department of Environmental Protection
PCBs - Polychlorinated Biphenyls
Bolded results indicate that the compound exceeds the NYCDEP Limitation for Effluent to Combined Sewers
* - Sample designation edited to include "W" to indicate sample is a water matrix
F - Filtered sample

Table B-2. Summary of Polychlorinated Biphenyl Concentrations in Sewer-Water Samples Collected in The Primary Sewer System, Sunnyside Yard, Queens, New York

Parameter (Concentrations in µg/L)	NYCDEP Limitation for Effluent to Combined Sewers	**Sample Designation:** **Sample Date:** **Location:**	MHWF-11* 10/11/2010	MHW-11 3/16/2011	MHWF-11 3/16/2011	MHW-11 3/17/2011	MHWF-11 3/17/2011	MHW-29 4/27/1994	MHW-37 7/26/1996
Aroclor-1016	--		0.25 UV	0.27 U	0.27 U	0.25 U	0.25 U	0.50 U	1.0 U
Aroclor-1221	--		0.25 UV	0.27 U	0.27 U	0.25 U	0.25 U	0.50 U	2.0 U
Aroclor-1232	--		0.25 UV	0.27 U	0.27 U	0.25 U	0.25 U	0.50 U	1.0 U
Aroclor-1242	--		0.25 UV	0.27 U	0.27 U	0.25 U	0.25 U	0.50 U	1.0 U
Aroclor-1248	--		0.25 UV	0.27 U	0.27 U	0.25 U	0.25 U	0.50 U	1.0 U
Aroclor-1254	--		0.25 UV	0.27 U	0.27 U	0.25 U	0.25 U	1.0 U	1.0 U
Aroclor-1260	--		0.25 UV	0.98	0.27 U	0.25 U	0.25 U	1.0 U	0.14
Aroclor-1262	--		0.25 UV	0.27 U	0.27 U	0.25 U	0.25 U	NA	NA
Aroclor-1268	--		0.25 UV	0.27 U	0.27 U	0.25 U	0.25 U	NA	NA
Total PCBs	1		0	0.98	0	0	0	0	0.14

J - Estimated value
U - Indicates that the compound was analyzed for but not detected
V – Qualifier added and/or value altered during validation
D - Compound identified in an analysis at a secondary dilution
NA - Not analyzed for by laboratory
µg/L - Micrograms per liter
NYCDEP - New York City Department of Environmental Protection
PCBs - Polychlorinated Biphenyls
Bolded results indicate that the compound exceeds the NYCDEP Limitation for Effluent to Combined Sewers
* - Sample designation edited to include "W" to indicate sample is a water matrix
F - Filtered sample

Table B-2. Summary of Polychlorinated Biphenyl Concentrations in Sewer-Water Samples Collected in The Primary Sewer System, Sunnyside Yard, Queens, New York

Parameter (Concentrations in µg/L)	NYCDEP Limitation for Effluent to Combined Sewers	**Sample Designation:** **Sample Date:** **Location:**	MHW-38* 10/12/2010	MHWF-38* 10/12/2010	MHW-38 3/16/2011	MHWF-38 3/16/2011	MHW-38 3/17/2011	MHWF-38 3/17/2011
Aroclor-1016	--		0.25 UV	0.25 UV	0.25 U	0.25 U	0.26 U	0.28 U
Aroclor-1221	--		0.25 UV	0.25 UV	0.25 U	0.25 U	0.26 U	0.28 U
Aroclor-1232	--		0.25 UV	0.25 UV	0.25 U	0.25 U	0.26 U	0.28 U
Aroclor-1242	--		0.25 UV	0.25 UV	0.25 U	0.25 U	0.26 U	0.28 U
Aroclor-1248	--		0.25 UV	0.25 UV	0.25 U	0.25 U	0.26 U	0.28 U
Aroclor-1254	--		0.25 UV	0.25 UV	0.25 U	0.25 U	0.26 U	0.28 U
Aroclor-1260	--		0.25 UV	0.25 UV	0.92	0.25 U	0.26 U	0.28 U
Aroclor-1262	--		0.25 UV	0.25 UV	0.25 U	0.25 U	0.26 U	0.28 U
Aroclor-1268	--		0.25 UV	0.25 UV	0.25 U	0.25 U	0.26 U	0.28 U
Total PCBs	1		0	0	0.92	0	0	0

J - Estimated value
U - Indicates that the compound was analyzed for but not detected
V – Qualifier added and/or value altered during validation
D - Compound identified in an analysis at a secondary dilution
NA - Not analyzed for by laboratory
µg/L - Micrograms per liter
NYCDEP - New York City Department of Environmental Protection
PCBs - Polychlorinated Biphenyls
Bolded results indicate that the compound exceeds the NYCDEP Limitation for Effluent to Combined Sewers
* - Sample designation edited to include "W" to indicate sample is a water matrix
F - Filtered sample

Table B-2. Summary of Polychlorinated Biphenyl Concentrations in Sewer-Water Samples Collected in The Primary Sewer System, Sunnyside Yard, Queens, New York

Parameter (Concentrations in µg/L)	NYCDEP Limitation for Effluent to Combined Sewers	**Sample Designation:** **Sample Date:** **Location:**	MHW-39 4/26/1994	MHW-39 4/26/1994 (24)S	MHW-40 4/25/1994 (4x8)S	MHW-40 4/25/1994 (48)E	MHWF-40 4/25/1994 (48)E	MHW-40 7/26/1996	MHWF-40 7/26/1996
Aroclor-1016	--		0.065 UJ	0.065 U	0.065 U	0.065 U	0.065 U	1.0 U	1.0 U
Aroclor-1221	--		0.065 UJ	0.065 U	0.065 U	0.065 U	0.065 U	2.0 U	2.0 U
Aroclor-1232	--		0.065 UJ	0.065 U	0.065 U	0.065 U	0.065 U	1.0 U	1.0 U
Aroclor-1242	--		0.065 UJ	0.065 U	0.065 U	0.065 U	0.065 U	1.0 U	1.0 U
Aroclor-1248	--		0.065 UJ	0.065 U	0.065 U	0.065 U	0.065 U	1.0 U	1.0 U
Aroclor-1254	--		0.065 UJ	0.065 U	0.065 U	0.24 J	0.065 U	0.26	1.0 U
Aroclor-1260	--		0.20 J	0.065 U	0.065 U	0.27 J	0.065 U	0.36	0.015 J
Aroclor-1262	--		NA	NA	NA	NA	NA	NA	NA
Aroclor-1268	--		NA	NA	NA	NA	NA	NA	NA
Total PCBs	1		0.2	0	0	0.51	0	0.62	0.015

J - Estimated value
U - Indicates that the compound was analyzed for but not detected
V – Qualifier added and/or value altered during validation
D - Compound identified in an analysis at a secondary dilution
NA - Not analyzed for by laboratory
µg/L - Micrograms per liter
NYCDEP - New York City Department of Environmental Protection
PCBs - Polychlorinated Biphenyls
Bolded results indicate that the compound exceeds the NYCDEP Limitation for Effluent to Combined Sewers
* - Sample designation edited to include "W" to indicate sample is a water matrix
F - Filtered sample

Table B-2. Summary of Polychlorinated Biphenyl Concentrations in Sewer-Water Samples Collected in The Primary Sewer System, Sunnyside Yard, Queens, New York

Parameter (Concentrations in µg/L)	NYCDEP Limitation for Effluent to Combined Sewers	**Sample Designation:** **Sample Date:** **Location:**	MHW-40* 10/12/2010	MHWF-40* 10/12/2010	MHW-40 3/16/2011	MHWF-40 3/16/2011	MHW-40 3/17/2011	MHWF-40 3/17/2011
Aroclor-1016	--		0.25 UV	0.25 UV	0.25 U	0.26 U	0.25 U	0.26 U
Aroclor-1221	--		0.25 UV	0.25 UV	0.25 U	0.26 U	0.25 U	0.26 U
Aroclor-1232	--		0.25 UV	0.25 UV	0.25 U	0.26 U	0.25 U	0.26 U
Aroclor-1242	--		0.25 UV	0.25 UV	0.25 U	0.26 U	0.25 U	0.26 U
Aroclor-1248	--		0.25 UV	0.25 UV	0.25 U	0.26 U	0.25 U	0.26 U
Aroclor-1254	--		0.25 UV	0.25 UV	0.25 U	0.26 U	0.25 U	0.26 U
Aroclor-1260	--		2.1	0.25 UV	0.25 U	0.26 U	0.25 U	0.26 U
Aroclor-1262	--		0.25 UV	0.25 UV	0.25 U	0.26 U	0.25 U	0.26 U
Aroclor-1268	--		0.25 UV	0.25 UV	0.25 U	0.26 U	0.25 U	0.26 U
Total PCBs	1		**2.1**	0	0	0	0	0

J - Estimated value
U - Indicates that the compound was analyzed for but not detected
V – Qualifier added and/or value altered during validation
D - Compound identified in an analysis at a secondary dilution
NA - Not analyzed for by laboratory
µg/L - Micrograms per liter
NYCDEP - New York City Department of Environmental Protection
PCBs - Polychlorinated Biphenyls
Bolded results indicate that the compound exceeds the NYCDEP Limitation for Effluent to Combined Sewers
* - Sample designation edited to include "W" to indicate sample is a water matrix
F - Filtered sample

Table B-2. Summary of Polychlorinated Biphenyl Concentrations in Sewer-Water Samples Collected in The Primary Sewer System, Sunnyside Yard, Queens, New York

Parameter (Concentrations in µg/L)	NYCDEP Limitation for Effluent to Combined Sewers	**Sample Designation:** **Sample Date:** **Location:**	MHW-42 7/26/1996	MHW-42* 10/12/2010	MHWF-42* 10/12/2010	MHW-42 3/16/2011	MHWF-42 3/16/2011	MHW-42 3/17/2011
Aroclor-1016	--		1.0 U	0.25 UV	0.25 UV	0.25 U	0.25 U	0.25 U
Aroclor-1221	--		2.0 U	0.25 UV	0.25 UV	0.25 U	0.25 U	0.25 U
Aroclor-1232	--		1.0 U	0.25 UV	0.25 UV	0.25 U	0.25 U	0.25 U
Aroclor-1242	--		1.0 U	0.25 UV	0.25 UV	0.25 U	0.25 U	0.25 U
Aroclor-1248	--		1.0 U	0.25 UV	0.25 UV	0.25 U	0.25 U	0.25 U
Aroclor-1254	--		0.18	0.25 UV	0.25 UV	0.25 U	0.25 U	0.25 U
Aroclor-1260	--		0.73	0.24 JV	0.25 UV	1	0.25 U	0.25 U
Aroclor-1262	--		NA	0.25 UV	0.25 UV	0.25 U	0.25 U	0.25 U
Aroclor-1268	--		NA	0.25 UV	0.25 UV	0.25 U	0.25 U	0.25 U
Total PCBs	1		0.91	0.24 JV	0	1	0	0

J - Estimated value
U - Indicates that the compound was analyzed for but not detected
V – Qualifier added and/or value altered during validation
D - Compound identified in an analysis at a secondary dilution
NA - Not analyzed for by laboratory
µg/L - Micrograms per liter
NYCDEP - New York City Department of Environmental Protection
PCBs - Polychlorinated Biphenyls
Bolded results indicate that the compound exceeds the NYCDEP Limitation for Effluent to Combined Sewers
* - Sample designation edited to include "W" to indicate sample is a water matrix
F - Filtered sample

Table B-2. Summary of Polychlorinated Biphenyl Concentrations in Sewer-Water Samples Collected in The Primary Sewer System, Sunnyside Yard, Queens, New York

Parameter (Concentrations in µg/L)	NYCDEP Limitation for Effluent to Combined Sewers	**Sample Designation:** **Sample Date:** **Location:**	MHWF-42 3/17/2011	MHW-43 4/27/1994	MHW-45* 10/11/2010	MHWF-45* 10/11/2010	MHW-45 3/16/2011	MHWF-45 3/16/2011
Aroclor-1016	--		0.28 U	0.065 UJ	0.25 UV	0.25 UV	0.25 U	0.25 U
Aroclor-1221	--		0.28 U	0.065 UJ	0.25 UV	0.25 UV	0.25 U	0.25 U
Aroclor-1232	--		0.28 U	0.065 UJ	0.25 UV	0.25 UV	0.25 U	0.25 U
Aroclor-1242	--		0.28 U	0.065 UJ	0.25 UV	0.25 UV	0.25 U	0.25 U
Aroclor-1248	--		0.28 U	0.065 UJ	0.25 UV	0.25 UV	0.25 U	0.25 U
Aroclor-1254	--		0.28 U	0.065 UJ	0.25 UV	0.25 UV	0.25 U	0.25 U
Aroclor-1260	--		0.28 U	0.065 UJ	0.23 JV	0.25 UV	0.3	0.25 U
Aroclor-1262	--		0.28 U	NA	0.25 UV	0.25 UV	0.25 U	0.25 U
Aroclor-1268	--		0.28 U	NA	0.25 UV	0.25 UV	0.25 U	0.25 U
Total PCBs	1		0	0	0.23 JV	0	0.3	0

J - Estimated value
U - Indicates that the compound was analyzed for but not detected
V – Qualifier added and/or value altered during validation
D - Compound identified in an analysis at a secondary dilution
NA - Not analyzed for by laboratory
µg/L - Micrograms per liter
NYCDEP - New York City Department of Environmental Protection
PCBs - Polychlorinated Biphenyls
Bolded results indicate that the compound exceeds the NYCDEP Limitation for Effluent to Combined Sewers
* - Sample designation edited to include "W" to indicate sample is a water matrix
F - Filtered sample

Table B-2. Summary of Polychlorinated Biphenyl Concentrations in Sewer-Water Samples Collected in The Primary Sewer System, Sunnyside Yard, Queens, New York

Parameter (Concentrations in µg/L)	NYCDEP Limitation for Effluent to Combined Sewers	**Sample Designation:** **Sample Date:** **Location:**	MHW-45 3/17/2011	MHWF-45 3/17/2011	MHW-51* 10/12/2010	MHWF-51* 10/12/2010	MHW-51 3/16/2011	MHWF-51 3/16/2011
Aroclor-1016	--		0.26 U	0.25 U	0.25 UV	0.25 UV	0.25 U	0.25 U
Aroclor-1221	--		0.26 U	0.25 U	0.25 UV	0.25 UV	0.25 U	0.25 U
Aroclor-1232	--		0.26 U	0.25 U	0.25 UV	0.25 UV	0.25 U	0.25 U
Aroclor-1242	--		0.26 U	0.25 U	0.25 UV	0.25 UV	0.25 U	0.25 U
Aroclor-1248	--		0.26 U	0.25 U	0.25 UV	0.25 UV	0.25 U	0.25 U
Aroclor-1254	--		0.26 U	0.25 U	0.25 UV	0.25 UV	0.25 U	0.25 U
Aroclor-1260	--		0.26 U	0.25 U	0.25 UV	0.25 UV	0.25 U	0.25 U
Aroclor-1262	--		0.26 U	0.25 U	0.25 UV	0.25 UV	0.25 U	0.25 U
Aroclor-1268	--		0.26 U	0.25 U	0.25 UV	0.25 UV	0.25 U	0.25 U
Total PCBs	1		0	0	0	0	0	0

J - Estimated value
U - Indicates that the compound was analyzed for but not detected
V – Qualifier added and/or value altered during validation
D - Compound identified in an analysis at a secondary dilution
NA - Not analyzed for by laboratory
µg/L - Micrograms per liter
NYCDEP - New York City Department of Environmental Protection
PCBs - Polychlorinated Biphenyls
Bolded results indicate that the compound exceeds the NYCDEP Limitation for Effluent to Combined Sewers
* - Sample designation edited to include "W" to indicate sample is a water matrix
F - Filtered sample

Table B-2. Summary of Polychlorinated Biphenyl Concentrations in Sewer-Water Samples Collected in The Primary Sewer System, Sunnyside Yard, Queens, New York

Parameter (Concentrations in µg/L)	NYCDEP Limitation for Effluent to Combined Sewers	**Sample Designation:** **Sample Date:** **Location:**	MHW-51 3/17/2011	MHWF-51 3/17/2011	MHW-52* 10/12/2010	MHW-52 4/26/1994 (10)N	MHW-52 4/26/1994 (18)SE	MHW-52 4/26/1994 (42)SW
Aroclor-1016	--		0.25 U	0.25 U	0.25 UV	0.065 U	0.065 U	0.065 U
Aroclor-1221	--		0.25 U	0.25 U	0.25 UV	0.065 U	0.065 U	0.065 U
Aroclor-1232	--		0.25 U	0.25 U	0.25 UV	0.065 U	0.065 U	0.065 U
Aroclor-1242	--		0.25 U	0.25 U	0.25 UV	0.065 U	0.065 U	0.065 U
Aroclor-1248	--		0.25 U	0.25 U	0.25 UV	0.065 U	0.065 U	0.065 U
Aroclor-1254	--		0.25 U	0.25 U	0.25 UV	0.065 U	0.065 U	0.065 U
Aroclor-1260	--		0.25 U	0.25 U	0.14 JV	0.065 U	0.065 U	0.065 U
Aroclor-1262	--		0.25 U	0.25 U	0.25 UV	NA	NA	NA
Aroclor-1268	--		0.25 U	0.25 U	0.25 UV	NA	NA	NA
Total PCBs	1		0	0	0.14 JV	0	0	0

J - Estimated value
U - Indicates that the compound was analyzed for but not detected
V – Qualifier added and/or value altered during validation
D - Compound identified in an analysis at a secondary dilution
NA - Not analyzed for by laboratory
µg/L - Micrograms per liter
NYCDEP - New York City Department of Environmental Protection
PCBs - Polychlorinated Biphenyls
Bolded results indicate that the compound exceeds the NYCDEP Limitation for Effluent to Combined Sewers
* - Sample designation edited to include "W" to indicate sample is a water matrix
F - Filtered sample

Table B-2. Summary of Polychlorinated Biphenyl Concentrations in Sewer-Water Samples Collected in The Primary Sewer System, Sunnyside Yard, Queens, New York

Parameter (Concentrations in µg/L)	NYCDEP Limitation for Effluent to Combined Sewers	**Sample Designation:** **Sample Date:** **Location:**	MHWF-52 4/26/1994 (42)SW	MHW-52 7/26/1996	MHWF-52* 10/12/2010	MHW-52 3/16/2011	MHWF-52 3/16/2011	MHW-52 3/17/2011
Aroclor-1016	--		0.065 UJ	1.0 U	0.25 UV	0.25 U	0.25 U	0.26 U
Aroclor-1221	--		0.065 UJ	2.0 U	0.25 UV	0.25 U	0.25 U	0.26 U
Aroclor-1232	--		0.065 UJ	1.0 U	0.25 UV	0.25 U	0.25 U	0.26 U
Aroclor-1242	--		0.065 UJ	1.0 U	0.25 UV	0.25 U	0.25 U	0.26 U
Aroclor-1248	--		0.065 UJ	1.0 U	0.25 UV	0.25 U	0.25 U	0.26 U
Aroclor-1254	--		0.065 UJ	1.0 U	0.25 UV	0.25 U	0.25 U	0.26 U
Aroclor-1260	--		0.065 UJ	0.29	0.25 UV	0.59	0.25 U	0.26 U
Aroclor-1262	--		NA	NA	0.25 UV	0.25 U	0.25 U	0.26 U
Aroclor-1268	--		NA	NA	0.25 UV	0.25 U	0.25 U	0.26 U
Total PCBs	1		0	0.29	0	0.59	0	0

J - Estimated value
U - Indicates that the compound was analyzed for but not detected
V – Qualifier added and/or value altered during validation
D - Compound identified in an analysis at a secondary dilution
NA - Not analyzed for by laboratory
µg/L - Micrograms per liter
NYCDEP - New York City Department of Environmental Protection
PCBs - Polychlorinated Biphenyls
Bolded results indicate that the compound exceeds the NYCDEP Limitation for Effluent to Combined Sewers
* - Sample designation edited to include "W" to indicate sample is a water matrix
F - Filtered sample

Table B-2. Summary of Polychlorinated Biphenyl Concentrations in Sewer-Water Samples Collected in The Primary Sewer System, Sunnyside Yard, Queens, New York

Parameter (Concentrations in µg/L)	NYCDEP Limitation for Effluent to Combined Sewers	**Sample Designation:** **Sample Date:** **Location:**	MHWF-52 3/17/2011	MHW-69 4/28/1994	MHW-69* 10/12/2010	MHWF-69* 10/12/2010	MHW-69 3/16/2011	MHWF-69 3/16/2011
Aroclor-1016	--		0.26 U	0.050 U	0.25 UV	0.25 UV	0.25 U	0.25 U
Aroclor-1221	--		0.26 U	0.050 U	0.25 UV	0.25 UV	0.25 U	0.25 U
Aroclor-1232	--		0.26 U	0.050 U	0.25 UV	0.25 UV	0.25 U	0.25 U
Aroclor-1242	--		0.26 U	0.050 U	0.25 UV	0.25 UV	0.25 U	0.25 U
Aroclor-1248	--		0.26 U	0.050 U	0.25 UV	0.25 UV	0.25 U	0.25 U
Aroclor-1254	--		0.26 U	1.0 U	0.25 UV	0.25 UV	0.25 U	0.25 U
Aroclor-1260	--		0.26 U	4.4	0.25 UV	0.25 UV	0.25 U	0.25 U
Aroclor-1262	--		0.26 U	NA	0.25 UV	0.25 UV	0.25 U	0.25 U
Aroclor-1268	--		0.26 U	NA	0.25 UV	0.25 UV	0.25 U	0.25 U
Total PCBs	1		0	4.4	0	0	0	0

J - Estimated value
U - Indicates that the compound was analyzed for but not detected
V – Qualifier added and/or value altered during validation
D - Compound identified in an analysis at a secondary dilution
NA - Not analyzed for by laboratory
µg/L - Micrograms per liter
NYCDEP - New York City Department of Environmental Protection
PCBs - Polychlorinated Biphenyls
Bolded results indicate that the compound exceeds the NYCDEP Limitation for Effluent to Combined Sewers
* - Sample designation edited to include "W" to indicate sample is a water matrix
F - Filtered sample

Table B-2. Summary of Polychlorinated Biphenyl Concentrations in Sewer-Water Samples Collected in The Primary Sewer System, Sunnyside Yard, Queens, New York

Parameter (Concentrations in µg/L)	NYCDEP Limitation for Effluent to Combined Sewers	**Sample Designation:** **Sample Date:** **Location:**	MHW-69 3/17/2011	MHWF-69 3/17/2011
Aroclor-1016	--		0.26 U	0.16 U
Aroclor-1221	--		0.26 U	0.16 U
Aroclor-1232	--		0.26 U	0.16 U
Aroclor-1242	--		0.26 U	0.16 U
Aroclor-1248	--		0.26 U	0.16 U
Aroclor-1254	--		0.26 U	0.16 U
Aroclor-1260	--		0.26 U	0.16 U
Aroclor-1262	--		0.26 U	0.16 U
Aroclor-1268	--		0.26 U	0.16 U
Total PCBs	1		0	0

J - Estimated value
U - Indicates that the compound was analyzed for but not detected
V – Qualifier added and/or value altered during validation
D - Compound identified in an analysis at a secondary dilution
NA - Not analyzed for by laboratory
µg/L - Micrograms per liter
NYCDEP - New York City Department of Environmental Protection
PCBs - Polychlorinated Biphenyls
Bolded results indicate that the compound exceeds the NYCDEP Limitation for Effluent to Combined Sewers
* - Sample designation edited to include "W" to indicate sample is a water matrix
F - Filtered sample

Table B-3. Summary of Polychlorinated Biphenyl Compound Concentrations in Sewer-Sediment Samples Collected in the Secondary Sewer System, Sunnyside Yard, Queens, New York

Parameter (Concentrations in µg/kg)	**Sample Designation:** / **Sample Date:** / **Location:**		
	CBS-28 / 4/28/1994 / CB-28	MHS-1 / 4/28/1994 / MH-1	MHS-65 / 4/28/1994 / MH-65
Aroclor-1016	96 U	530 U	150 U
Aroclor-1221	96 U	530 U	150 U
Aroclor-1232	96 U	530 U	150 U
Aroclor-1242	96 U	530 U	150 U
Aroclor-1248	96 U	530 U	220
Aroclor-1254	230	1800	300 U
Aroclor-1260	260	1700	440
Total PCBs	490	3500	660

J - Estimated value
U - Indicates that the compound was analyzed for but not detected
V – Qualifier added and/or value altered during validation
P - There is a greater than 25 percent difference for detected concentrations between the two GC columns Aroclor target analyte
D - Compound identified in an analysis at a secondary dilution
µg/kg - Micrograms per kilograms
PCBs - Polychlorinated Biphenyls

Table B-4. Summary of Polychlorinated Biphenyl Concentrations in Sewer-Water Samples Collected in The Secondary Sewer System, Sunnyside Yard, Queens, New York

Parameter (Concentrations in µg/L)	**Sample Designation:**	CBW-28	MHW-1	MHW-1	MHWF-1	MHW-1	MHWF-1	MHW-59
	Sample Date:	4/28/1994	2/9/1993	4/28/1994	4/28/1994	8/15/1996	8/15/1996	4/28/1994
	Location:	CB-28	MH-1	MH-1	MH-1	MH-1	MH-1	MH-59
Aroclor-1016		0.065 UJ	0.066 U	0.065 U	0.065 U	1.0 U	1.0 U	0.065 U
Aroclor-1221		0.065 UJ	0.066 U	0.065 U	0.065 U	2.0 U	2.0 U	0.065 U
Aroclor-1232		0.065 UJ	0.066 U	0.065 U	0.065 U	1.0 U	1.0 U	0.065 U
Aroclor-1242		0.065 UJ	0.066 U	0.065 U	0.065 U	1.0 U	1.0 U	0.065 U
Aroclor-1248		0.065 UJ	0.066 U	0.065 U	0.065 U	1.0 U	1.0 U	0.065 U
Aroclor-1254		0.065 UJ	0.33 UV	0.065 U	0.065 U	1.0 U	1.0 U	0.065 U
Aroclor-1260		0.065 UJ	0.13 UV	0.065 U	0.065 U	1.0 U	1.0 U	0.065 U
Total PCBs		0	0	0	0	0	0	0

J - Estimated value
U - Indicates that the compound was analyzed for but not detected
V – Qualifier added and/or value altered during validation
µg/L - Micrograms per liter
ft bls - Feet below land surface
PCBs - Polychlorinated Biphenyls

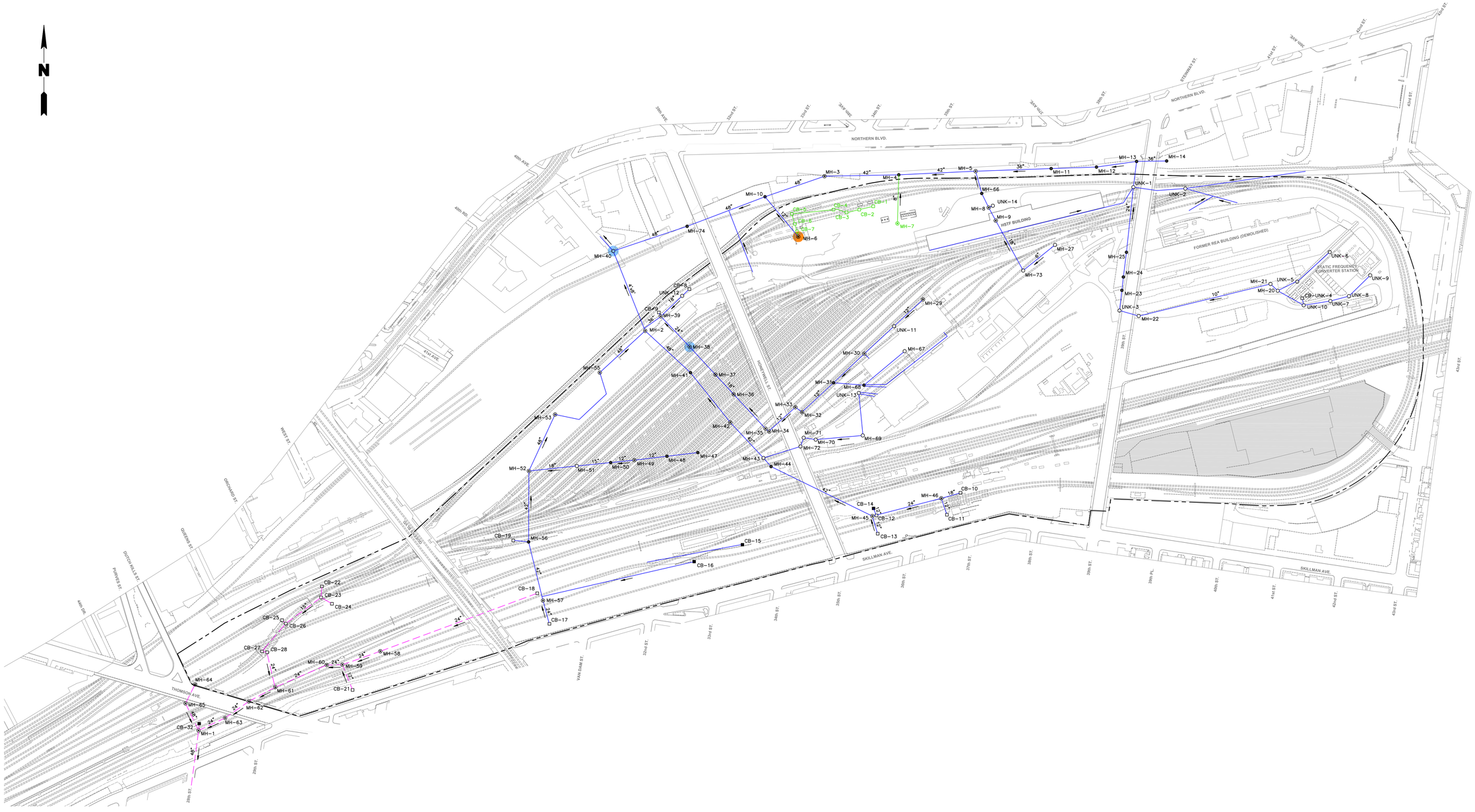

LEGEND

PRIMARY SEWER SYSTEM (COMBINED SEWER SYSTEM)	
SECONDARY SEWER SYSTEM (STORM SEWER SYSTEM)	
REMOVED OR INOPERABLE SECTIONS OF SEWER SYSTEM	
APPROXIMATE PROPERTY BOUNDARY	
PRIVATE PROPERTY NOT OWNED BY AMTRAK	
UNK-10	MANHOLE LOCATED IN THE FIELD BUT NOT SHOWN IN AVAILABLE SEWER MAPS
MH-2	LOCATION AND DESIGNATION OF SEWER MANHOLE WITH GRATE COVER
MH-5	LOCATION AND DESIGNATION OF SEWER MANHOLE WITH SOLID COVER
MH-66	LOCATION AND DESIGNATION OF SEWER MANHOLE NOT LOCATED OR COMPLETELY BURIED
CB-18	LOCATION AND DESIGNATION OF CATCH BASIN
CB-14	LOCATION AND DESIGNATION OF CATCH BASIN NOT LOCATED OR COMPETELY BURIED
48"	DIAMETER OF SEWER PIPE (INCHES) DIRECTION OF SEWER FLOW
MH-6	LOCATION AND DESIGNATION OF OU-5 IRM MANHOLE CLEANOUT
MH-2	LOCATION AND DESIGNATION OF MANHOLE OF CONCERN

200' 0 200'

Title:

SEWER SYSTEM REQUIRING REMEDIATION

OU-5 FEASIBILITY STUDY

Prepared For:

AMTRAK

Remedial	Compiled by: L.O.	Date: 23MAR12	PLATE
	Prepared by: J.A.D.	Scale: AS SHOWN	
REMEDIAL ENGINEERING, P.C.	Project Mgr: H.G.	Project: 0055.0050Y006	1
ENVIRONMENTAL ENGINEERS	File: 0055.0050Y125.04R.DWG		

V:\CAD\PROJECTS\0055Y\0050Y\125\0055.0050Y125.04R.DWG

PROPOSED REMEDIAL ACTION PLAN

Amtrak Sunnyside Yard
Operable Unit Number: 05
State Superfund Project
Long Island City, Queens County
Site No. 241006
February 2012

Prepared by
Division of Environmental Remediation
New York State Department of Environmental Conservation

PROPOSED REMEDIAL ACTION PLAN

Amtrak Sunnyside Yard
Long Island City, Queens County
Site No. 241006
February 2012

SECTION 1: SUMMARY AND PURPOSE OF THE PROPOSED PLAN

The New York State Department of Environmental Conservation (the Department), in consultation with the New York State Department of Health (NYSDOH), is proposing a remedy for the above referenced site. The disposal of hazardous wastes at the site has resulted in threats to public health and the environment that would be addressed by the remedy proposed by this Proposed Remedial Action Plan (PRAP). The disposal of hazardous wastes at this site, as more fully described in Section 6 of this document, has contaminated various environmental media. The proposed remedy is intended to attain the remedial action objectives identified for this site for the protection of public health and the environment. This PRAP identifies the preferred remedy, summarizes the other alternatives considered, and discusses the reasons for the preferred remedy.

The New York State Inactive Hazardous Waste Disposal Site Remedial Program (also known as the State Superfund Program) is an enforcement program, the mission of which is to identify and characterize suspected inactive hazardous waste disposal sites and to investigate and remediate those sites found to pose a significant threat to public health and environment.

The Department has issued this document in accordance with the requirements of New York State Environmental Conservation Law and Title 6 of the Official Compilation of Codes, Rules and Regulations of the State of New York; (6 NYCRR) Part 375. This document is a summary of the information that can be found in the site-related reports and documents in the document repository identified below.

SECTION 2: CITIZEN PARTICIPATION

The Department seeks input from the community on all PRAPs. This is an opportunity for public participation in the remedy selection process. The public is encouraged to review the reports and documents, which are available at the following repository:

Queens Public Library
Sunnyside Branch
43-06 Greenpoint Avenue
Long Island City, NY 11101
Phone: (718) 784-3033

A public comment period has been set from:

2/17/2012 to 3/19/2012

A public meeting is scheduled for the following date:

3/8/2012 at 7:00 PM

Public meeting location:

NYSDEC Annex Bldg., 11-15 47th Ave., Long Island City, NY

At the meeting, the findings of the remedial investigation (RI) and the feasibility study (FS) will be presented along with a summary of the proposed remedy. After the presentation, a question-and-answer period will be held, during which verbal or written comments may be submitted on the PRAP.

Written comments may also be sent through 3/19/2012 to:

Hasan Ahmed
NYS Department of Environmental Conservation
Division of Environmental Remediation
One Hunters Point Plaza 47-40 21st Street
Long Island City, NY 11101
hrahmed@gw.dec.state.ny.us

The Department may modify the proposed remedy or select another of the alternatives presented in this PRAP based on new information or public comments. Therefore, the public is encouraged to review and comment on the proposed remedy identified herein. Comments will be summarized and addressed in the responsiveness summary section of the Record of Decision (ROD). The ROD is the Department's final selection of the remedy for this site.

Receive Site Citizen Participation Information By Email

Please note that the Department's Division of Environmental Remediation (DER) is "going paperless" relative to citizen participation information. The ultimate goal is to distribute citizen participation information about contaminated sites electronically by way of county email listservs. Information will be distributed for all sites that are being investigated and cleaned up in a particular county under the State Superfund Program, Environmental Restoration Program, Brownfield Cleanup Program, Voluntary Cleanup Program, and Resource Conservation and Recovery Act Program. We encourage the public to sign up for one or more county listservs at http://www.dec.ny.gov/chemical/61092.html

SECTION 3: SITE DESCRIPTION AND HISTORY

Location:

Sunnyside Yard (the Site) is located at 39-29 Honeywell Street, Long Island City, Queens County, New York.

Site Features:
The Site is a railroad maintenance and storage facility that currently encompasses approximately 133 acres. Newtown Creek, which defines the border between Queens and Kings Counties, is located less than 0.5 mile south of the western portion of the Site. The Site is bordered by commercial/residential properties, with Northern Boulevard located to the north, 42nd Place located to the east, Thompson Avenue to the west, and Skillman Avenue located to the south.

Current Zoning/Use:
The Site is located in Manufacturing Zone (M1-1) and used as a railroad maintenance and storage facility

Historic Use:
The Yard was originally constructed in the early 1900's by the Pennsylvania Tunnel and Terminal Company, a subsidiary of Pennsylvania Railroad (later known as the Penn Central Transportation Company). On Aprill 1, 1976, the Consolidated Rail Corporation (Conrail) acquired the Site, and the same day conveyed it to AMTRAK, which has continued to operate it as a storage and maintenance facility for railroad rolling stock. Prior to September 29, 1961, a portion of the yard was owned by Long Island Rail Road (LIRR). Today, the LIRR maintains a right-of-way through the Yard. The Long Island Railroad (LIRR) is constructing tunnels through the Yard as part of its East Side Access (ESA) project. An extensive cleanup program was completed in 1996 to remove PCB contaminated sediment from impacted sewer manholes with subsequent sampling to identify sewer segments and manholes with recurring PCB contaminated sediment impacts.

Operable Units:
The site is divided into six operable units. An operable unit represents a portion of a remedial program for a site that for technical or administrative reasons can be addressed separately to investigate, eliminate or mitigate a release, threat of release or exposure pathway resulting from the site contamination. The operable units for this site are:

Operable unit 1 (OU1) is the soil above the water table within the footprint of the High Speed Trainset Facility Service and Inspection (HSTF S and I) Building.

Operable unit 2 (OU2) is the soil above the water table within the footprint of the HSTF S and I Building ancillary structures.

Operable unit 3 (OU3) is the soil and separate phase petroleum hydrocarbon accumulation above the water table and soil below the water table within 8 acres in the north central portion of the Site.

Operable unit 4 (OU4) is the soil above the water table (unsaturated zone) at the Site, excluding OU-1, OU-2, and OU-3.

Operable unit 5 (OU5) is the sewer system (water and sediment) beneath the Site.

Operable unit 6 (OU6) is the groundwater and saturated soil beneath the Site.

Site Geology and Hydrology:
Historic fill on the Site is predominantly comprised of reworked glacial deposits (unstratified sand, silt, clay and gravel) and railroad ballast, with lesser amounts of ash, cinders and construction debris. With the exception of paved areas, land occupied by buildings, and vegetated areas, the railroad ballast is ubiquitous at the land surface throughout the Site.

Groundwater beneath the Site occurs in fill deposits, wetlands, or the Upper Pleistocene glacial deposits. The saturated Upper Pleistocene deposits comprise the Upper Glacial aquifer. The depth to groundwater across the Site varies from one to fifteen feet below ground surface.

Groundwater within the shallow deposits flows predominantly west across the Site. However, groundwater between Queens Boulevard and Honeywell Street flows northerly and northwesterly toward the buried flow path of the Dutch Kills Creek and/or East River. In the deeper deposits, groundwater predominantly flows west across the Site.

Operable Unit (OU) Number 05 is the subject of this document.

A Record of Decision was issued previously for OU 01,02,03,04,06.

A site location map is attached as Figure 1.

SECTION 4: LAND USE AND PHYSICAL SETTING

The Department may consider the current, intended, and reasonably anticipated future land use of the site and its surroundings when evaluating a remedy for soil remediation. For this site, alternatives (or an alternative) that restrict(s) the use of the site to industrial use as described in Part 375-1.8(g) are/is being evaluated in addition to an alternative which would allow for unrestricted use of the site.

A comparison of the results of the investigation to the appropriate standards, criteria and guidance values (SCGs) for the identified land use and the unrestricted use SCGs for the site contaminants is included in the Tables for the media being evaluated in Exhibit A.

SECTION 5: ENFORCEMENT STATUS

Potentially Responsible Parties (PRPs) are those who may be legally liable for contamination at a site. This may include past or present owners and operators, waste generators, and haulers.

The PRPs for the site, documented to date, include:

Amtrak and New Jersey Transit Corp

A Remedial Design/Remedial Action Order on Consent and Administrative Settlement lndex No. W2-0081-08-10 was executed on April 15, 2010, which supersedes the Remedial Investigation/Feasibility Study Order on Consent, Index No. W2-008187-06 dated September 21, 1989, amended August 25, 1993 and February 4, 1998.

SECTION 6: SITE CONTAMINATION

6.1: Summary of the Remedial Investigation

A Remedial Investigation (RI) has been conducted. The purpose of the RI was to define the nature and extent of any contamination resulting from previous activities at the site. The field activities and findings of the investigation are described in the RI Report.

The following general activities are conducted during an RI:

- Research of historical information,
- Geophysical survey to determine the lateral extent of wastes,
- Test pits, soil borings, and monitoring well installations,
- Sampling of waste, surface and subsurface soils, groundwater, and soil vapor,
- Sampling of surface water and sediment,
- Ecological and Human Health Exposure Assessments.

6.1.1: Standards, Criteria, and Guidance (SCGs)

The remedy must conform to promulgated standards and criteria that are directly applicable or that are relevant and appropriate. The selection of a remedy must also take into consideration guidance, as appropriate. Standards, Criteria and Guidance are hereafter called SCGs.

To determine whether the contaminants identified in various media are present at levels of concern, the data from the RI were compared to media-specific SCGs. The Department has developed SCGs for groundwater, surface water, sediments, and soil. The NYSDOH has developed SCGs for drinking water and soil vapor intrusion. The tables found in Exhibit A list the applicable SCGs in the footnotes. For a full listing of all SCGs see: http://www.dec.ny.gov/regulations/61794.html

6.1.2: RI Information

The analytical data collected on this site includes data for:

- sediment

The data have identified contaminants of concern. A "contaminant of concern" is a hazardous waste that is sufficiently present in frequency and concentration in the environment to require evaluation for remedial action. Not all contaminants identified on the property are contaminants of concern. The nature and extent of contamination and environmental media requiring action are summarized in Exhibit A. Additionally, the RI Report contains a full discussion of the data. The contaminant(s) of concern identified for this Operable Unit at this site is/are:

Polychlorinated Biphenyls (PCB)

As illustrated in Exhibit A, the contaminant(s) of concern exceed the applicable SCGs for:

- sediment

6.2: Interim Remedial Measures

An interim remedial measure (IRM) is conducted at a site when a source of contamination or exposure pathway can be effectively addressed before issuance of the Record of Decision.

The following IRM(s) has/have been completed at this site based on conditions observed during the RI.

IRM Manhole MH-6

In October of 2011, remediation and rehabilitation activities in MH-6 was undertaken. This work included the removal of sediment and water through the use of a vacuum truck. Further, all relic, inactive pipes entering MH-6 were sealed using inflatable packers followed by plugging with concrete. Additionally, cracks within MH-6 were sealed in an effort to reduce groundwater infiltration into the manhole. A post remediation water sample was collected from the bottom of MH-6 and submitted for PCB analysis. PCBs were not detected in this sample, confirming that remediation activities in MH-6 were effective.

6.3: Summary of Human Exposure Pathways

This human exposure assessment identifies ways in which people may be exposed to site-related contaminants. Chemicals can enter the body through three major pathways (breathing, touching or swallowing). This is referred to as *exposure*.

Groundwater in the area of the site is not used as a source of potable water. Access to the site is controlled, preventing trespassers from coming in contact with contaminated soils.

6.4: Summary of Environmental Assessment

This section summarizes the assessment of existing and potential future environmental impacts presented by the site. Environmental impacts may include existing and potential future exposure pathways to fish and wildlife receptors, wetlands, groundwater resources, and surface water.

Based upon the resources and pathways identified and the toxicity of the contaminants of ecological concern at this site, a Fish and Wildlife Resources Impact Analysis (FWRIA) was deemed not necessary for OU 05.

Nature and Extent of Contamination:

Operable Unit 5:

Sewer Sediment: PCBs were detected in 29 samples of sediment from the sewers at concentrations ranging from 0.053 mg/kg at MH-69 to 120 mg/kg at MH-6. PCB concentrations at MH-6 (one sample) and MH-38 (two samples) exceeded the 25 mg/kg NYSDEC-approved site specific soil cleanup level. MH-6 has been remediated as an IRM in October 2011.

Sewer Water: Discrete water samples (filtered and unfiltered) were collected from 12 manhole locations and analyzed for PCBs during performance of the OU-5 RI. PCBs were detected in 17 of 39 unfiltered samples with concentrations ranging from 0.14 ug/L to a high of 83 ug/L. Five of the unfiltered samples, one from MH-3, three from MH-6 and one from MH-40 exceeded the 1 ug/L waste water effluent limit. The waste water effluent limit is appropriate since the sewer discharges to a Waste Water Treatment Plant. Only one of the 39 filtered samples (MH-3) contained PCBs at a concentration (1.8 ug/L) slightly exceeding the 1 ug/L waste water effluent limit.

6.5: Summary of the Remediation Objectives

The objectives for the remedial program have been established through the remedy selection process stated in 6 NYCRR Part 375. The goal for the remedial program is to restore the site to pre-disposal conditions to the extent feasible. At a minimum, the remedy shall eliminate or mitigate all significant threats to public health and the environment presented by the contamination identified at the site through the proper application of scientific and engineering principles.

The remedial action objectives for this site are:

Sediment

RAOs for Public Health Protection

- Prevent direct contact with contaminated sediments.

RAOs for Environmental Protection

- Restore sediments to pre-release/background conditions to the extent feasible.

SECTION 7: SUMMARY OF THE PROPOSED REMEDY

To be selected, the remedy must be protective of human health and the environment, be cost-effective, comply with other statutory requirements, and utilize permanent solutions, alternative technologies or resource recovery technologies to the maximum extent practicable. The remedy must also attain the remedial action objectives identified for the site, which are presented in

Section 6.5. Potential remedial alternatives for the Site were identified, screened and evaluated in the FS report.

A summary of the remedial alternatives that were considered for this site is presented in Exhibit B. Cost information is presented in the form of present worth, which represents the amount of money invested in the current year that would be sufficient to cover all present and future costs associated with the alternative. This enables the costs of remedial alternatives to be compared on a common basis. As a convention, a time frame of 30 years is used to evaluate present worth costs for alternatives with an indefinite duration. This does not imply that operation, maintenance, or monitoring would cease after 30 years if remediation goals are not achieved. A summary of the Remedial Alternatives Costs is included as Exhibit C.

The basis for the Department's proposed remedy is set forth at Exhibit D.

The estimated present worth cost to implement the remedy is $947,000. The cost to construct the remedy is estimated to be $927,000 and the estimated average annual cost is $20,000.

The elements of the proposed remedy are as follows:

1. Remedial Design:

A remedial design program would be implemented to provide the details necessary for the construction, operation, maintenance, and monitoring of the remedial program. Green remediation principles and techniques will be implemented to the extent feasible in the design, implementation, and site management of the remedy as per DER-31. The major green remediation components are as follows;

- Considering the environmental impacts of treatment technologies and remedy stewardship over the long term;
- Conserving and efficiently managing resources and materials;
- Integrating the remedy with the end use where possible and encouraging green and sustainable re-development.

2. Sediment and Sewer Water Removal:

A weir located in a vault nearby and just downstream of MH-40 serves as a sediment trap, collecting impacted sediments at this location. In addition, manhole MH-40 represents the collection point for the three sewer legs containing the manholes of concern and it is the furthest downstream manhole located in OU-5. This weir will continue to operate as a sediment trap. MH-38 and MH-40 are the key locations for remediation.

All sediment and water present within manholes MH-38 and MH-40 (including the aforementioned weir) will be removed using a combination of hydraulic jetting coupled with mechanical vacuum recovery. Hydraulic (jetting) of sewer manholes and sediment removal utilize high water velocity to clean the sewer interior walls and manhole structure. Hydraulic jetting directs a high pressure stream of water directly at the interior surfaces to be cleaned. Jetting equipment is most often teamed with a high-powered vacuum unit that mechanically

removes and containerizes the waste from the manhole location. Jetting is commonly used for relatively small diameter, low flow sewers.

Site-specific soil cleanup objectives (SCOs) relevant to the planned use of the site will be used to guide removal of contaminated sewer sediment. On-site sediment and water which exceed site-specific SCOs will be excavated and transported off-site for disposal. The site-specific SCOs are: 25 mg/kg for total PCBs in sediment and 1 µg/l for total PCBs in sewer water.

Approximately 11,000 gallons of PCB contaminated sediment and water will be removed and disposed of in accordance with all federal, state and local rules and regulations.

3. Institutional Control:

Imposition of an institutional control in the form of an environmental easement, upon remediation of the entire site, to include the controlled property that:

- requires the site owner to complete and submit to the Department a periodic certification of institutional and engineering controls in accordance with Part 375-1.8 (h)(3);
- allows the use and development of the controlled property for industrial use as defined by Part 375-1.8(g), although land use is subject to local zoning laws;
- restricts the use of groundwater as a source of potable or process water, without necessary water quality treatment as determined by the NYSDOH or NYC DOH;
- prohibits agriculture or vegetable gardens on the controlled property; and
- requires compliance with the Department approved Site Management Plan.

4. Site Management Plan:

A Site Management Plan is required, which includes the following:

a. an Institutional and Engineering Control Plan that identifies all use restrictions and engineering controls for the site and details the steps and media-specific requirements necessary to ensure the following institutional and/or engineering controls remain in place and effective:

Institutional Controls: The Environmental Easement discussed above, notification to all parties of contamination existing in the sewers.

Engineering Controls: The existing site perimeter fence and gate with guard and maintenance of Manhole covers to restrict access to the Site.

This plan includes, but may not be limited to:

- a Sediment Removal Plan which details the provisions for management of future sediment removal in areas of remaining contamination;
- descriptions of the provisions of the environmental easement including any land use, and groundwater use restrictions;
- provisions for the management and inspection of the identified engineering controls;
- maintaining site access controls and Department notification; and
- the steps necessary for the periodic reviews and certification of the institutional and/or engineering controls.

b. a Monitoring Plan to assess the performance and effectiveness of the remedy. The plan includes, but may not be limited to:

- monitoring of sewer water and sediment PCB content to assess the performance and effectiveness of the remedy;
- a schedule of monitoring and frequency of submittals to the Department.

Exhibit A

NATURE AND EXTENT OF CONTAMINATION

This section describes the findings of the Remedial Investigation for all environmental media that were evaluated. As described in Section 6.1, samples were collected from various environmental media to characterize the nature and extent of contamination.

For each medium, a table summarizes the findings of the investigation. The tables present the range of contamination found at the site in the media and compares the data with the applicable SCGs for the site. For comparison purposes, the SCGs are provided for each medium.

Waste/Source Areas

As described in the RI report, waste/source materials were identified at the site and are impacting water and sediment in the combined sewers within the Yard.

Wastes are defined in 6 NYCRR Part 375-1.2 (aw) and include solid, industrial and/or hazardous wastes. Source Areas are defined in 6 NYCRR Part 375 (au). Source areas are areas of concern at a site were substantial quantities of contaminants are found which can migrate and release significant levels of contaminants to another environmental medium. Wastes and Source areas were identified at the site include,

Remedial investigations (RIs) performed in OU-3, OU-4, and OU-5 have determined that PCBs are the primary contaminant of concern (COC) at the Yard, and the potential sources of PCB contamination that would impact the primary sewer system are:

1) The primary sewer system (OU5) is partially located beneath OU-3, and historically PCBs were the primary COC found in OU-3 (i.e., historically the PCB-containing mobile SPH plume and surface runoff could have impacted the primary sewer system).
2) The majority of stationary PCB-containing transformers that are known to have leaked are located within the body tracks (equipped with track drains). Trains equipped with PCB-containing transformers were stored on the body tracks and represent an additional source of PCBs to the primary sewer system via the track drains.

The waste/source areas identified will be addressed in the remedy selection process.

Sewer Water

Starting on October 11, 2010 through March 17, 2011, the OU-5 RI sewer water sampling plan was implemented. In all, 78 discrete water samples (39 filtered and 39 unfiltered) were collected from 12 manhole locations and analyzed for PCBs during performance of the OU-5 RI. PCBs were detected in 17 of 39 unfiltered samples with concentrations ranging from 0.14 µg/L to a high of 83 µg/L.

Five of these unfiltered samples, one from MH-3, three from MH-6 and one from MH-40 exceeded the 1 µg/L waste water effluent limit. Only one of the 39 filtered samples (MH-3) contained PCBs at a concentration (1.8 µg/L) slightly exceeding the 1 µg/L waste water effluent limit.

Table 1 - Sewer Water

Detected Constituents	Concentration Range Detected (μg/l or ppb)[a]	SCG[b] (μg/l or ppb)	Frequency Exceeding SCG
Total PCBs	0.14 to 83	1.0	Unfiltered: 5 out of 39 Filtered: 1 out of 39

a - ppb: parts per billion, which is equivalent to micrograms per liter, ug/L, in water.
b-SCG: The NYCDEP Effluent Limit for the sewer system that ultimately discharges to Bowery Bay Wastewater Treatment Plant

Based on the findings of the Remedial Investigation, the presence of PCBs has resulted in the contamination of sewer water. The site contaminants that are considered to be the primary contaminants of concern which will drive the remediation of sewer water to be addressed by the remedy selection process are PCBs.

Sewer Sediments

Along with the sewer water samples, 32 discrete sediment samples were collected from 12 manhole locations and analyzed for PCBs during performance of the OU-5 RI. PCBs were detected in 29 of these samples at concentrations ranging from 0.153 mg/kg at manhole MH-69 to 120mg/kg at manhole MH-6.

PCB concentrations at MH-6 (one sample) and MH-38 (two samples) exceeded the 25 mg/kg NYSDEC-recommended soil cleanup level for the Yard.

Table 2 – Sewer Sediment

Detected Constituents	Concentration Range Detected (mg/kg or ppm)[a]	SCG[b] (mg/kg or ppm)	Frequency Exceeding SCG
Total PCBs	0.053 to 120	25	3 out of 32

a - ppm: parts per million, which is equivalent to milligrams per kilogram, mg/kg, in sediment;
b - SCG: The 6NYCRR375-6.8 Industrial Soil Cleanup Objective.

Based on the findings of the Remedial Investigation, the presence of PCBs has resulted in the contamination of sediment. The site contaminants that are considered to be the primary contaminants of concern which will drive the remediation of sediment to be addressed by the remedy selection process are PCBs

Exhibit B

DESCRIPTION OF REMEDIAL ALTERNATIVES

The following alternatives were considered based on the remedial action objectives (see Section 6.5) to address the contaminated media identified at the site as described in Exhibit A.

Alternative 1: No Further Action

The No Further Action Alternative recognizes the remediation of the site completed by the IRM(s) described in Section 6.2. This alternative leaves the site in its present condition and does not provide any additional protection of the environment.

A no action alternative is evaluated to provide a baseline for comparison of potential risks posed if no remedial action were performed. For this remedial alternative, all sewer sediment and water with PCB concentrations exceeding the Site-specific soil cleanup level would remain in place.

Alternative 2: Sewer System Monitoring and Deferred Cleanout of Sewer Manholes of Concern (Post OU-3 and OU-4 Remediation and ESA Construction)

This alternative would include periodic monitoring of the manhole MH-40 and identifying trends in PCB occurrence in sewer sediment and water and future cleaning of the sewer manhole. The rationale for selecting MH-38 and MH-40 as key locations for remediation as part of this Remedial Alternative is provided below:

MH-38
Manholes MH-38 and MH-6 were the only manholes to contain sediment that exceeded the SCG during the 2010/2011 OU-5 RI sampling events. Amtrak has already remediated MH-6 as an IRM completed in October 2011. Therefore, MH-38 is the only location with a remaining, recent exceedance of the sediment SCG

MH-40
The cleanout of MH-40 would be the key component of this Remedial Alternative. As described in the OU-5 RI Report, in 1997 the New York City Transit Authority (NYCTA) installed a weir within MH-40. This weir was installed as part of the construction of a new offsite sewer siphon located downstream of MH-40. The sewer siphon was part of a NYCTA subway expansion project, completely independent and unrelated to Amtrak's Sunnyside Yard. Although the NYCTA's project is unrelated to Sunnyside Yard, the weir installed by NYCTA in MH-40 serves as a sediment trap, removing impacted sediments at this location. In addition, MH-40 represents the collection point for the three sewer legs containing the manholes of concern and it is the furthest downstream manhole in located in OU-5.

Sewer water and sediment samples would be collected from manhole MH-40 every two years and submitted for PCB analysis. During each event, samples would be collected both during dry conditions and during post-precipitation conditions. The monitoring program would continue until remediation efforts in OU-3 and OU-4 are completed and East Side Access (ESA) Construction is completed, at which time cleaning of the sewer manholes MH-38 and MH-40 would be performed. All sediment and water present within manholes MH-38 and MH-40 would be removed using a combination of hydraulic jetting coupled with mechanical vacuum recovery. The manhole interior would be thoroughly washed and rinsed to remove adhered sediment. The sediment and wash water generated during the cleaning of these manholes would be collected using a vacuum truck and containerized for offsite disposal. A gravity separator would likely be required to separate solids and water prior

to disposal of both media. Waste material would be sampled for waste characterization and disposed of accordingly.

Following the cleaning of MH-38 and MH-40, a routine monitoring plan consisting of sampling MH-40 and identifying trends in PCB occurrence in sewer sediment and water would commence.

Sewer water and sediment samples would be collected every two years and submitted for PCB analysis. During each event, samples would be collected both during dry conditions and during post-precipitation conditions. The monitoring program would continue until remediation efforts in OU-3 and OU-4 are completed, ESA construction is completed, and two consecutive rounds of data are obtained from MH-40 without any exceedances of the sediment or water SCGs. This approach will ensure that any PCB-containing sediment located in sewer legs between manholes will ultimately be recovered from the sediment trap in MH-40. Should monitoring identify an exceedance of either the sediment or water SCG, additional cleanout of MH-40 will be completed and continued monitoring will be required.

Present Worth: *$967,414*
Capital Cost: *$927,201*
Annual Costs: *$40,213*

Alternative 3: Cleaning of Manholes MH-38 and MH-40 and Sewer System Monitoring

This alternative consists of the same elements as Remedial Alternative 2, however rather than defer OU-5 sewer system remediation until after the completion of OU-3 and OU-4 remediation and completion of ESA construction OU-5 remediation would begin immediately. In the near term, manholes MH-38 and MH-40 will be accessed and cleaned using similar method as Alternative 2. The rationale for selecting MH-38 and MH-40 as key locations for remediation and the cleaning and monitoring plans which are part of this Remedial Alternative are provided below:

MH-38
Manholes MH-38 and MH-6 were the only manholes to contain sediment that exceeded the SCG during the 2010/2011 OU-5 RI sampling events. Amtrak has already remediated MH-6 as an IRM completed in October 2011. Therefore, MH-38 is the only location with a remaining, recent exceedance of the sediment SCG. In the interest of proactively remediating this exceedance and preventing potential migration, the prompt remediation of MH-38 was included as a component to this Remedial Alternative.

MH-40
The cleanout of MH-40 would be the key component of this Remedial Alternative. As described in the OU-5 RI Report, in 1997 the New York City Transit Authority (NYCTA) installed a weir within MH-40. This weir was installed as part of the construction of a new offsite sewer siphon located downstream of MH-40. The sewer siphon was part of a NYCTA subway expansion project, completely independent and unrelated to Amtrak's Sunnyside Yard. Although the NYCTA's project is unrelated to Sunnyside Yard, the weir installed by NYCTA in MH-40 serves as a sediment trap, removing impacted sediments at this location. In addition, MH-40 represents the collection point for the three sewer legs containing the manholes of concern and it is the furthest downstream manhole in located in OU-5.

All sediment and water present within manholes MH-38 and MH-40 would be removed using a combination of hydraulic jetting coupled with mechanical vacuum recovery. The manhole interior would be thoroughly washed

and rinsed to remove adhered sediment. The sediment and wash water generated during the cleaning of these manholes would be collected using a vacuum truck and containerized for offsite disposal. A gravity separator would likely be required to separate solids and water prior to disposal of both media. Waste material would be sampled for waste characterization and disposed of accordingly.

Following the cleaning of MH-38 and MH-40, a routine monitoring plan consisting of sampling MH-40 and identifying trends in PCB occurrence in sewer sediment and water would commence.

Sewer water and sediment samples would be collected every two years and submitted for PCB analysis. During each event, samples would be collected both during dry conditions and during post-precipitation conditions. The monitoring program would continue until remediation efforts in OU-3 and OU-4 are completed, ESA construction is completed, and two consecutive rounds of data are obtained from MH-40 without any exceedances of the sediment or water SCGs. This approach will ensure that any PCB-containing sediment located in sewer legs between manholes will ultimately be recovered from the sediment trap in MH-40. Should monitoring identify an exceedance of either the sediment or water SCG, additional cleanout of MH-40 will be completed and continued monitoring will be required.

Present Worth: *$946,976*
Capital Cost: *$927,201*
Annual Costs: *$19,775*

Exhibit C

REMEDIAL ALTERNATIVE COSTS

Remedial Alternative	Capital Cost ($)	Annual Costs ($)	Total Present Worth ($)
Alternative 1: No Further Action	0	0	0
Alternative 2: Sewer System Monitoring and Deferred Cleanout of Sewer Manholes of Concern (Post OU-3 and OU-4 Remediation and ESA Construction)	$927,000	$40,000	$967,000
Alternative 3: Cleaning of MH-38 and MH-40 and Sewer System Monitoring	$927,000	$20,000	$947,000

Exhibit D

SUMMARY OF THE PROPOSED REMEDY

The Department is proposing Alternative 3, Cleaning of MH-38 and MH-40 and Sewer System Monitoring as the remedy for this site. Alternative 3 would achieve the remediation goals for the site by removing all contaminated water and sediments from the sewer. The elements of this remedy are described in Section 7.

Basis for Selection

The proposed remedy is based on the results of the RI and the evaluation of alternatives. The criteria to which potential remedial alternatives are compared are defined in 6 NYCRR Part 375. A detailed discussion of the evaluation criteria and comparative analysis is included in the FS report.

The first two evaluation criteria are termed "threshold criteria" and must be satisfied in order for an alternative to be considered for selection.

With the exception of the timing of cleaning of manholes MH-38 and MH-40, Remedial Alternative 2 and 3 are very similar in their approach. Therefore, an in-depth comparison of these two alternatives is not provided below. Alternative 3 provides a more immediate removal of PCB-impacted sediments posing a threat to offsite migration within the sewer system compared to Alternative 2. Alternative 3 therefore, more fully satisfies the criteria of overall protection of the environment and reduction of toxicity and mobility.

The detailed comparison of the Alternatives is given below:

1. Protection of Human Health and the Environment. This criterion is an overall evaluation of each alternative's ability to protect public health and the environment.

The proposed Alternative #3 would satisfy this criterion by removing sewer media exhibiting hazardous concentrations and exceeding chemical-specific SCGs; and preventing offsite migration. Protection is provided by removing PCB-impacted sewer sediment and water exceeding the chemical-specific SCGs. Institutional and engineering controls would not be required to provide future protection to humans and the environment. Sediment exhibiting hazardous concentrations would be scheduled for removal immediately, followed by monitoring and additional cleanout (if required). This would continue until the completion of the OU-3 and OU-4 remediation, and ESA construction, and until two consecutive rounds of monitoring confirms no exceedances of the SCGs in MH-40. Therefore, the risk for impacts to OU-5 and offsite migration via the sewer system would be completely removed.

Alternative 2 has the same elements as Alternative 3, and would also satisfy this criterion. Alternative 1 does not provide any protection to public health and the environment and will not be evaluated further.

2. Compliance with New York State Standards, Criteria, and Guidance (SCGs). Compliance with SCGs addresses whether a remedy will meet environmental laws, regulations, and other standards and criteria. In addition, this criterion includes the consideration of guidance which the Department has determined to be applicable on a case-specific basis.

The proposed remedy Alternative 3 would comply with the applicable chemical and action-specific SCGs for the media of concern.

Specifically, Remedial Alternative 3 would:

- Satisfy the 6 NYCRR Part 375 goal to eliminate or mitigate all significant threats to
- public health and the environment;
- Effectively remove "consequential" amounts of NYS listed hazardous waste in
- accordance with 6 NYCRR Part 375;
- Comply with all TSCA low occupancy PCB Remediation cleanup requirements; and
- Comply with removing impacted media exceeding the chemical-specific SCGs.

Alternative 2 would also comply with the applicable chemical and action specific SCGs. Because Alternatives 2 and 3satisfy the threshold criteria, the remaining criteria are particularly important in selecting a final remedy for the site.

The next six "primary balancing criteria" are used to compare the positive and negative aspects of each of the remedial strategies.

3. Long-term Effectiveness and Permanence. This criterion evaluates the long-term effectiveness of the remedial alternatives after implementation. If wastes or treated residuals remain on-site after the selected remedy has been implemented, the following items are evaluated: 1) the magnitude of the remaining risks, 2) the adequacy of the engineering and/or institutional controls intended to limit the risk, and 3) the reliability of these controls.

The proposed remedy Alternative 3 provides long-term effectiveness through the permanent removal of PCB-impacted sewer sediment and water. All material would be transferred to an offsite disposal facility equipped to properly manage this material.

Alternative 2 also provides long-term effectiveness and permanence however at an undefined point in the future.

4. Reduction of Toxicity, Mobility or Volume. Preference is given to alternatives that permanently and significantly reduce the toxicity, mobility or volume of the wastes at the site.

Alternatives 2 and 3 would remove hazardous concentrations of PCBs in the near term and alleviate mobility concerns. Sediment removal and sewer cleaning would effectively reduce the toxicity, mobility, and volume of sediment with PCB concentrations exceeding the Yard soil cleanup levels. As demonstrated by the OU-5 RI, PCB-impacted sewer water is attributed to suspended sediment in the water samples. Therefore, the toxicity, mobility, and volume of impacted sewer water will also be reduced via sediment removal and sewer cleaning, with this reduction occurring immediately for Alternative 3 rather than at an undefined future time for Alternative 2.

5. Short-term Impacts and Effectiveness. The potential short-term adverse impacts of the remedial action upon the community, the workers, and the environment during the construction and/or implementation are evaluated. The length of time needed to achieve the remedial objectives is also estimated and compared against the other alternatives.

A moderate level of short-term effects to remedial workers during sewer cleaning activities is associated with Alternative 3. Remedial workers will be required to perform confined space entry and will be in direct contact with sewer water, sediment, and vapors. Health and safety concerns would be reduced through verification that

all remedial workers possess up to date confined space entry training, personal protective equipment is used at all times (e.g., safety harnesses, respiratory protection), and use of mechanical equipment for cleaning as much as possible. A limited scope CAMP would be employed to monitor VOCs at the work area and site perimeter. Alternative 3 poses minimal short term risks to community. Waste materials will be contained in tanks or within vacuum trucks upon removal and throughout the transportation process to the disposal facility.

Alternative 2 would not be as effective in the short-term, since it delays the implementation of the remedy for at up to 10 years.

6. Implementability. The technical and administrative feasibility of implementing each alternative are evaluated. Technical feasibility includes the difficulties associated with the construction of the remedy and the ability to monitor its effectiveness. For administrative feasibility, the availability of the necessary personnel and materials is evaluated along with potential difficulties in obtaining specific operating approvals, access for construction, institutional controls, and so forth.

The sewer cleaning methods to be used for this remedial alternative are readily available. Experienced remedial contractors, specialized sewer contractors, and mechanical equipment are readily available to implement the remedial activities associated with this alternative.

Implementability concerns that do exist for this remedial alternative include access to MH-38 and MH-40. Personnel confined space access will most likely be required for cleanout of these manholes. Since the primary sewer system is a combined sewer system, there is the potential to encounter a significant volume of combined waste, which increases health and safety precautions. Although it is expected that mechanical equipment will be used for waste removal, vapors may be present causing an increased time to perform the work and increased personnel to account for shorter shifts while performing confined space entry work.

Access agreements would be required for cleaning of MH-40. Without an access agreement with MTA and possibly an off-site third party that allows a significant amount of work space for equipment and personnel, cleaning of this manhole in the near-term will not be possible. MH-38 is located within the body tracks. A significant level of coordination with Amtrak's Track Department will be required to arrange for trains to be removed from this area and ensure no damage to the tracks occurs during the cleaning. Mobilizing cleaning equipment to MH-38 will also require a significant amount of coordination and possibly mandate the use of specialized equipment (e.g., transport equipment via rail).

Implementability concerns posed by Alternative 1 do not exist since there would not be any actions performed.

7. Cost-Effectiveness. Capital costs and annual operation, maintenance, and monitoring costs are estimated for each alternative and compared on a present worth basis. Although cost-effectiveness is the last balancing criterion evaluated, where two or more alternatives have met the requirements of the other criteria, it can be used as the basis for the final decision.

Although Alternative 3 is the most comprehensive alternative, it still has a lower cost than Alternative 2.

Since there are no remedial actions for Alternative 1, there is no capital cost associated this alternative.

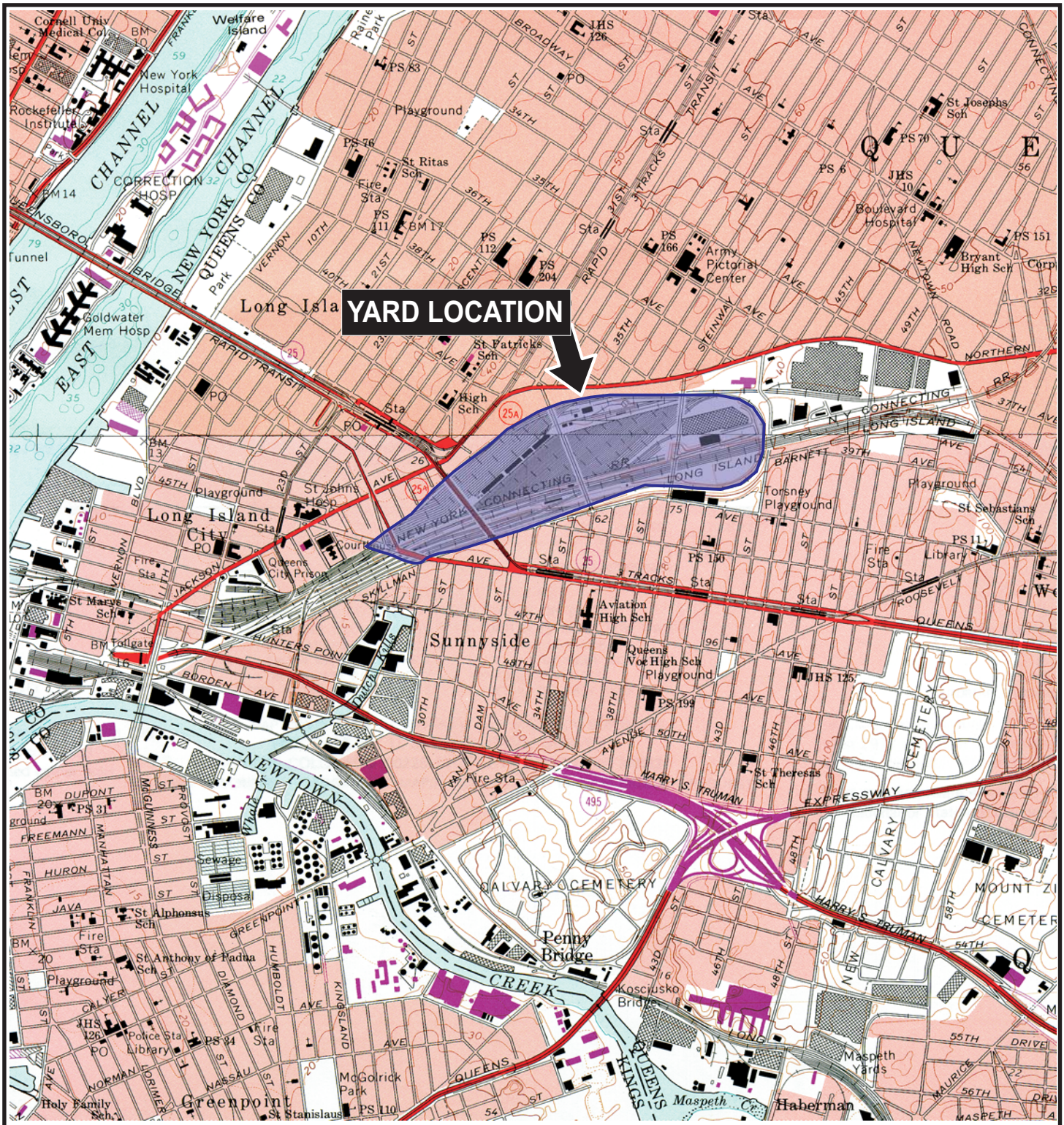

SOURCE:
CENTRAL PARK AND BROOKLYN, NEW YORK
QUADRANGLE 7.5 MINUTE SERIES (TOPOGRAPHIC)

QUADRANGLE LOCATION

N

0 2000'

Title:

LOCATION OF SITE

OU-5 FEASIBILITY STUDY

Prepared for:

AMTRAK

ROUX
ROUX ASSOCIATES, INC.
Environmental Consulting & Management

Compiled by: H.G.	Date: 17NOV11	FIGURE
Prepared by: J.A.D.	Scale: AS SHOWN	1
Project Mgr.: H.G.	Project No.: 0055.0050Y006	
File: 0055.0050Y125.05.CDR		

V:\CAD\PROJECTS\0055Y\0050Y\125\0055.0050Y125.05.CDR

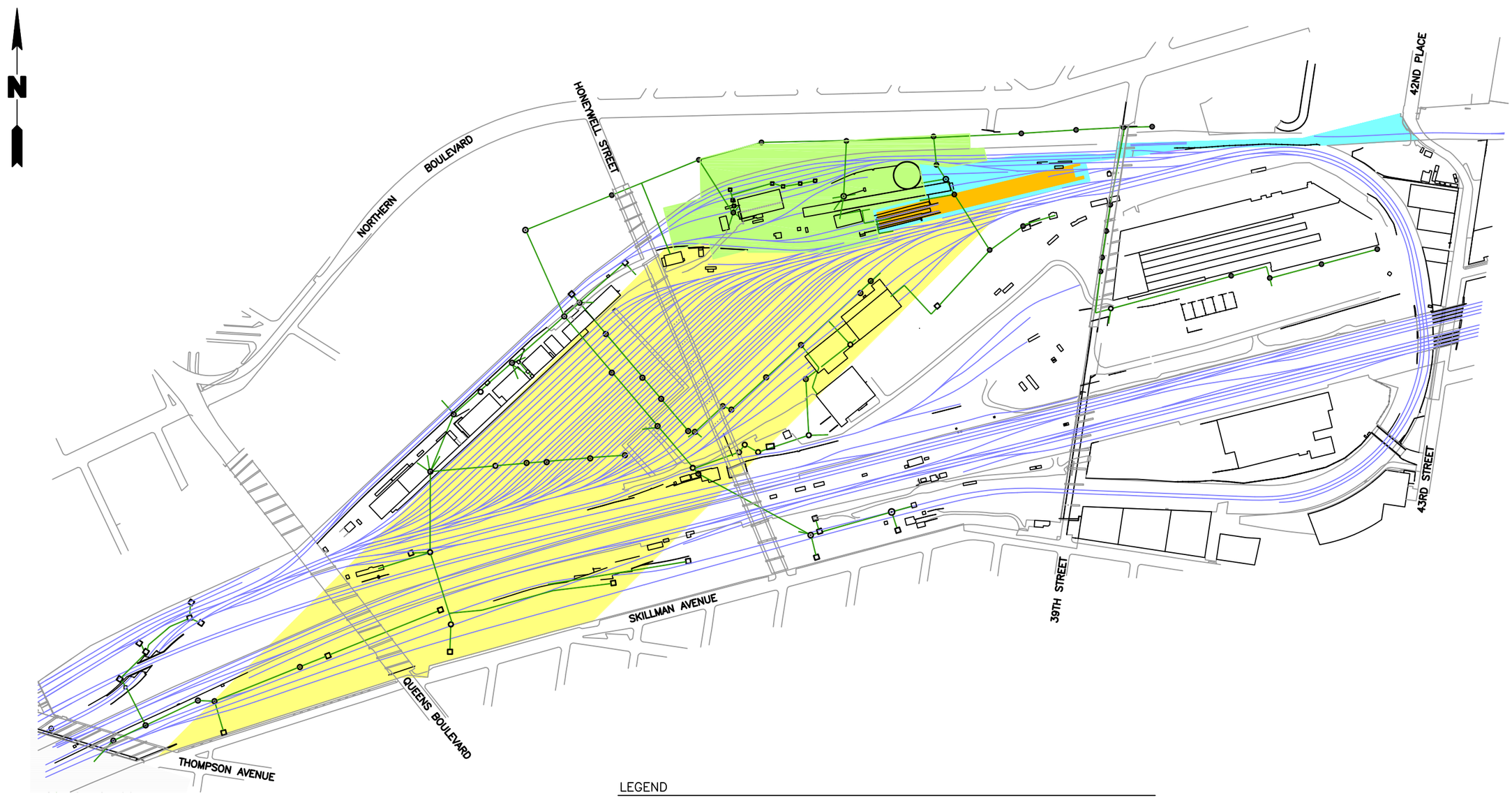

NOTES

1. LOCATIONS OF SEWER COMPONENTS BASED UPON A REVIEW OF AMTRAK–SUPPLIED ENGINEERING DIAGRAMS AND LIMITED FIELD SURVEY.
2. OU–6, GROUNDWATER BENEATH THE YARD (UNDERLIES ALL OTHER OU's)
3. LIRR – LONG ISLAND RAIL ROAD

LEGEND

- LOCATION OF RAILROAD TRACK
- APPROXIMATE LOCATION OF SEWER
- GRATE COVER CATCH BASIN LOCATION
- SOLID COVER MANHOLE LOCATION
- GRATE COVER MANHOLE LOCATION
- APPROXIMATE PROPERTY BOUNDARY

- OU–1
- OU–2
- OU–3
- OU–4
- OU–5

OU–6, GROUNDWATER BENEATH THE YARD (UNDERLIES ALL OTHER OU's)

400' 0 400'

Title:

AMTRAK YARD LAYOUT

OU–5 FEASIBILITY STUDY

Prepared For:

AMTRAK

ROUX

ROUX ASSOCIATES, INC.
Environmental Consulting and Management

Compiled by: H.G.	Date: 29NOV11	FIGURE
Prepared by: J.A.D.	Scale: AS SHOWN	2
Project Mgr: H.G.	Project: 0055.0050Y006	
File: 0055.0050Y125.06.DWG		

V:\CAD\PROJECTS\0055Y\0050Y\125\0055.0050Y125.06.DWG

Designation	MHW-3	MHW-3	MHWF-3	MHW-3	MHWF-3	MHW-3	MHWF-3	MHW-3	MHWF-3
Date	2/8/93	7/26/96	7/26/96	10/11/10	10/11/10	3/16/11	3/16/11	3/17/11	3/17/11
Total PCBs	ND	0.89	0.017	0.18 JV	ND	ND	ND	2.8	1.8

Designation	MHS-3	MH-3	MHS-3	MHS-3
Date	2/8/93	11/13/96	3/11/97	10/11/10
Total PCBs	54000	32500	1380	ND

Designation	MHS-6	MHS-6	MHS-6
Date	10/11/10	3/16/11	3/17/11
Total PCBs	120000 D	21000	15000 JV

Designation	CB-4
Date	11/2/96
Total PCBs	7390

Designation	MHW-6	MHW-6	MHW-6	MHWF-6	MHW-6	MHWF-6	MHW-6	MHWF-6
Date	2/8/93	7/26/96	10/11/10	10/11/10	3/16/11	3/16/11	3/17/11	3/17/11
Total PCBs	ND	0.015	83 D	ND	12	ND	16 JV	ND

Designation	MHW-40 (4x8)S	MHW-40 (48)E	MHWF-40 (48)E	MHW-40	MHWF-40	MHW-40	MHWF-40	MHW-40	MHWF-40	MHW-40	MHWF-40
Date	4/25/94	4/25/94	4/25/94	7/26/96	7/26/96	10/12/10	10/12/10	3/16/11	3/16/11	3/17/11	3/17/11
Total PCBs	ND	0.51	ND	0.62	0.015	2.1	ND	ND	ND	ND	ND

Designation	MHS-40 (4x8)S	MHS-40 (48)E	MHS-40	MH-40	MHS-40	MHS-40	MHS-40
Date	4/25/94	4/25/94	7/26/96	11/13/96	10/12/10	3/16/11	3/17/11
Total PCBs	15100	16200	148900	160000	ND	65	130

Designation	MHW-39	MHW-39 (24)S
Date	4/26/94	4/26/94
Total PCBs	0.20	ND

Designation	MHW-2	MHW-2 (4x8)N	MHWF-2 (4x8)N	MHW-2	MHWF-2	MHW-2 FROM MH-41	MHWF-2 FROM MH-41	MHW-2 FROM MH-55	MHWF-2 FROM MH-55
Date	2/9/93	4/26/94	4/26/94	7/26/96	7/26/96	10/12/10	10/12/10	10/12/10	10/12/10
Total PCBs	2.3	0.66	ND	0.224	0.1	0.26	ND	0.22 JV	ND

Designation	MHW-2 FROM MH-41	MHWF-2 FROM MH-41	MHW-2 FROM MH-55	MHWF-2 FROM MH-55	MHW-2 FROM MH-41	MHWF-2 FROM MH-41	MHW-2 FROM MH-55	MHWF-2 FROM MH-55
Date	3/16/11	3/16/11	3/16/11	3/16/11	3/17/11	3/17/11	3/17/11	3/17/11
Total PCBs	0.84	ND	0.72	ND	ND	ND	ND	ND

Designation	MHS-2	MHS-2	MHS-2 DL	MH-2	MHS-2 FROM MH-41	MHS-2 FROM MH-55	MHS-2FROM MH-41	MHS-2 FROM MH-55	MHS-2 FROM MH-41	MHS-2 FROM MH-55
Date	2/9/93	4/26/94	7/26/96	11/12/96	10/12/10	10/12/10	3/16/11	3/16/11	3/17/11	3/17/11
Total PCBs	82000	11900	54100	8760	1800	510	1200	2600 JV	920	1100

Designation	MHS-38	MHS-38	MHS-38
Date	10/12/10	3/16/11	3/17/11
Total PCBs	7800 D	30000	83000 JV

Designation	MHW-38	MHWF-38	MHW-38	MHWF-38	MHW-38	MHWF-38
Date	10/12/10	10/12/10	3/16/11	3/16/11	3/17/11	3/17/11
Total PCBs	ND	ND	0.92	ND	ND	ND

Designation	MHS-55	MH-55
Date	4/26/94	11/12/96
Total PCBs	25000	4300

Designation	MHS-52	MH-52	MHS-52	MHS-52	MHS-52	MHS-52
Date	4/26/94	11/12/96	3/11/97	10/12/10	3/16/11	3/17/11
Total PCBs	2900	8600	91100	540	340	310

Designation	MHW-52 (10)N	MHW-52 (18)SE	MHW-52 (42)SW	MHWF-52 (42)SW	MHW-52	MHW-52	MHWF-52	MHW-52	MHWF-52	MHW-52	MHWF-52
Date	4/26/94	4/26/94	4/26/94	4/26/94	7/26/96	10/12/10	10/12/10	3/16/11	3/16/11	3/17/11	3/17/11
Total PCBs	ND	ND	ND	ND	0.29	0.14 JV	ND	0.59	ND	ND	ND

Designation	MHW-51	MHWF-51	MHW-51	MHWF-51	MHW-51	MHWF-51
Date	10/12/10	10/12/10	3/16/11	3/16/11	3/17/11	3/17/11
Total PCBs	ND	ND	ND	ND	ND	ND

Designation	MHW-7
Date	2/8/93
Total PCBs	14.8

Designation	MH-5
Date	11/13/96
Total PCBs	18800

Designation	MHW-5	MHW-5
Date	2/8/93	7/26/96
Total PCBs	ND	0.077

Designation	MHW-8	MHW-8	MHWF-8	MHW-8	MHWF-8	MHW-8	MHWF-8
Date	2/9/93	10/11/10	10/11/10	3/16/11	3/16/11	3/17/11	3/17/11
Total PCBs	20.6	ND	ND	ND	ND	ND	ND

Designation	MH-11	MH-11	MHS-11	MHS-11
Date	3/11/97	10/11/10	3/16/11	3/17/11
Total PCBs	1000	520	500	380

Designation	MHW-11	MHWF-11	MHW-11	MHWF-11	MHW-11	MHWF-11
Date	10/11/10	10/11/10	3/16/11	3/16/11	3/17/11	3/17/11
Total PCBs	ND	ND	0.98	ND	ND	ND

Designation	MHS-8 DL	MH-8	MHS-8
Date	2/9/93	11/12/96	3/16/11
Total PCBs	4200	140	ND

Designation	MHS-29
Date	4/27/94
Total PCBs	170

Designation	MHW-29
Date	4/27/94
Total PCBs	ND

Designation	MH-69	MHW-69	MHWF-69	MHW-69	MHWF-69	MHW-69	MHWF-69
Date	4/28/94	10/12/10	10/12/10	3/16/11	3/16/11	3/17/11	3/17/11
Total PCBs	4.4	ND	ND	ND	ND	ND	ND

Designation	MHS-69 (18)NE	MHS-69 (36)E	MH-69	MHS-69	MHS-69	MHS-69
Date	4/28/94	4/28/94	11/12/96	10/12/10	3/16/11	3/17/11
Total PCBs	4700	29000	145	72	53	76

Designation	MHW-45	MHWF-45	MHW-45	MHWF-45	MHW-45	MHWF-45
Date	10/11/10	10/11/10	3/16/11	3/16/11	3/17/11	3/17/11
Total PCBs	0.23 JV	ND	0.3	ND	ND	ND

Designation	MHW-43
Date	4/27/94
Total PCBs	ND

Designation	MHS-35
Date	4/28/94
Total PCBs	950

Designation	MHS-45	MHS-45	MHS-45	MHS-45
Date	4/28/94	10/11/10	3/16/11	3/17/11
Total PCBs	1503	2050 JV	180	600

Designation	MHW-42	MHW-42	MHWF-42	MHW-42	MHWF-42	MHW-42	MHWF-42
Date	7/26/96	10/12/10	10/12/10	3/16/11	3/16/11	3/17/11	3/17/11
Total PCBs	0.91	0.24 JV	ND	1	ND	ND	ND

Designation	MHW-37
Date	7/26/96
Total PCBs	0.14

Designation	MHS-37	MH-37
Date	4/28/94	11/12/96
Total PCBs	9400	38000

Designation	MHS-42	MHS-42 DL	MH-42	MHS-42	MHS-42	MHS-42
Date	4/26/94	8/15/96	11/12/96	10/12/10	3/16/11	3/17/11
Total PCBs	51000	2610	5400	1410	900	1200 JV

LEGEND

- PRIMARY SEWER SYSTEM (COMBINED SEWER SYSTEM)
- SECONDARY SEWER SYSTEM (STORM SEWER SYSTEM)
- REMOVED OR INOPERABLE SECTIONS OF SEWER SYSTEM
- APPROXIMATE PROPERTY BOUNDARY
- PRIVATE PROPERTY NOT OWNED BY AMTRAK
- UNK–10 MANHOLE LOCATED IN THE FIELD BUT NOT SHOWN IN AVAILABLE SEWER MAPS
- MH–2 LOCATION AND DESIGNATION OF SEWER MANHOLE WITH GRATE COVER
- MH–5 LOCATION AND DESIGNATION OF SEWER MANHOLE WITH SOLID COVER
- MH–66 LOCATION AND DESIGNATION OF SEWER MANHOLE NOT LOCATED OR COMPLETELY BURIED
- CB–18 LOCATION AND DESIGNATION OF CATCH BASIN
- CB–14 LOCATION AND DESIGNATION OF CATCH BASIN NOT LOCATED OR COMPETELY BURIED
- 48" DIAMETER OF SEWER PIPE (INCHES) DIRECTION OF SEWER FLOW

SEWER SEDIMENT

Designation	MHS-1
Date	4/28/94
Total PCBs	3500

← TOTAL CONCENTRATION MICROGRAMS PER KILOGRAM (μg/kg)

SEWER WATER

Designation	MHW-7
Date	2/8/93
Total PCBs	14.8

← TOTAL CONCENTRATION MICROGRAMS PER LITER (μg/L)

NOTES

1. IF SUFFICIENT QUANTITIES OF SEWER WATER AND/OR SEWER SEDIMENT WERE NOT PRESENT IN THE INFLUENT PIPES AT MULTIPLE INFLUENT SAMPLING LOCATIONS, BUT SEWER WATER AND/OR SEWER SEDIMENT WAS PRESENT IN THE MANHOLE, THEN THE SAMPLE WAS COLLECTED FROM THE MANHOLE BOTTOM AND THE SAMPLE DESIGNATION DOESN'T INDICATE A SAMPLING LOCATION.
2. DESIGNATIONS WITH THE LETTER "F" INDICATE A FILTERED SAMPLE.
3. DESIGNATIONS WITH THE LETTER "W" INDICATE A SEWER WATER SAMPLE.
4. DESIGNATIONS WITH THE LETTER "S" INDICATE A SEWER SEDIMENT SAMPLE.
5. DESIGNATIONS WITH THE PREFIX "DL" INDICATE A DILUTED SEWER SEDIMENT SAMPLE.
6. THE LETTER "J" INDICATES AN ESTIMATED VALUE
7. THE LETTER "V" INDICATES QUALIFIER ADDED AND/OR VALVE ALTERED DURING VALIDATION
8. THE LETTER "D" INDICATES A COMPOUND IDENTIFIED IN AN ANALYSIS AT A SECONDARY DILUTION
9. ND – PCB'S NOT DETECTED

Title:

SUMMARY OF TOTAL PCBs IN SEWER WATER AND SEDIMENT SAMPLES

OPERABLE UNIT 5 REMEDIAL INVESTIGATION REPORT
SUNNYSIDE YARD, QUEENS, NEW YORK

Prepared For:

AMTRAK

ROUX ASSOCIATES, INC.
Environmental Consulting and Management

Compiled by: L.O.	Date: 12AUG11	PLATE
Prepared by: J.A.D.	Scale: AS SHOWN	2
Project Mgr: H.G.	Project: 0055.0050Y005	
File: 0055.0050Y122.04.DWG		

RECORD OF DECISION

Amtrak Sunnyside Yard
Operable Unit Number 05: Sewer System beneath the Yard
State Superfund Project
Long Island City, Queens County
Site No. 241006
March 2012

Prepared by
Division of Environmental Remediation
New York State Department of Environmental Conservation

DECLARATION STATEMENT - RECORD OF DECISION

Amtrak Sunnyside Yard
Operable Unit Number: 05
State Superfund Project
Long Island City, Queens County
Site No. 241006
March 2012

Statement of Purpose and Basis

This document presents the remedy for Operable Unit Number: 05: Sewer System beneath the Yard of the Amtrak Sunnyside Yard site, a Class 2 inactive hazardous waste disposal site. The remedial program was chosen in accordance with the New York State Environmental Conservation Law and Title 6 of the Official Compilation of Codes, Rules and Regulations of the State of New York (6 NYCRR) Part 375, and is not inconsistent with the National Oil and Hazardous Substances Pollution Contingency Plan of March 8, 1990 (40CFR300), as amended.

This decision is based on the Administrative Record of the New York State Department of Environmental Conservation (the Department) for Operable Unit Number: 05 of the Amtrak Sunnyside Yard site and the public's input to the proposed remedy presented by the Department. A listing of the documents included as a part of the Administrative Record is included in Appendix B of the ROD.

Description of Selected Remedy

The elements of the selected remedy are as follows:

1. Remedial Design:

A remedial design program will be implemented to provide the details necessary for the construction, operation, maintenance, and monitoring of the remedial program. Green remediation principles and techniques will be implemented to the extent feasible in the design, implementation, and site management of the remedy as per DER-31. The major green remediation components are as follows;

- Considering the environmental impacts of treatment technologies and remedy stewardship over the long term;
- Conserving and efficiently managing resources and materials;
- Integrating the remedy with the end use where possible and encouraging green and sustainable re-development.

2. Sediment and Sewer Water Removal:

A weir located in a vault nearby and just downstream of MH-40 serves as a sediment trap, collecting impacted sediments at this location. In addition, manhole MH-40 represents the collection point for the three sewer legs containing the manholes of concern and it is the furthest downstream manhole located in OU-5. This weir will continue to operate as a sediment trap. MH-38 and MH-40 are the key locations for remediation.

All sediment and water present within manholes MH-38 and MH-40 (including the aforementioned weir) will be removed using a combination of hydraulic jetting coupled with mechanical vacuum recovery. Hydraulic (jetting) of sewer manholes and sediment removal utilize high water velocity to clean the sewer interior walls and manhole structure. Hydraulic jetting directs a high pressure stream of water directly at the interior surfaces to be cleaned. Jetting equipment is most often teamed with a high-powered vacuum unit that mechanically removes and containerizes the waste from the manhole location. Jetting is commonly used for relatively small diameter, low flow sewers.

Site-specific soil cleanup objectives (SCOs) relevant to the planned use of the site will be used to guide removal of contaminated sewer sediment. On-site sediment and water which exceed site-specific SCOs will be excavated and transported off-site for disposal. The site-specific SCOs are: 25 mg/kg for total PCBs in sediment and 1 µg/l for total PCBs in sewer water.

Approximately 11,000 gallons of PCB contaminated sediment and water will be removed and disposed of in accordance with all federal, state and local rules and regulations.

3. Institutional Control:

Imposition of an institutional control in the form of an environmental easement, upon remediation of the entire site, to include the controlled property that:

- requires the site owner to complete and submit to the Department a periodic certification of institutional and engineering controls in accordance with Part 375-1.8 (h)(3);
- allows the use and development of the controlled property for industrial use as defined by Part 375-1.8(g), although land use is subject to local zoning laws;
- restricts the use of groundwater as a source of potable or process water, without necessary water quality treatment as determined by the NYSDOH or NYC DOH;
- prohibits agriculture or vegetable gardens on the controlled property; and
- requires compliance with the Department approved Site Management Plan.

4. Site Management Plan:

A Site Management Plan is required, which includes the following:

a. an Institutional and Engineering Control Plan that identifies all use restrictions and engineering controls for the site and details the steps and media-specific requirements necessary to ensure the following institutional and/or engineering controls remain in place and effective:

Institutional Controls: The Environmental Easement discussed above, notification to all parties of contamination existing in the sewers.

Engineering Controls: The existing site perimeter fence and gate with guard and maintenance of Manhole covers to restrict access to the Site.

This plan includes, but may not be limited to:

- a Sediment Removal Plan which details the provisions for management of future sediment removal in areas of remaining contamination;
- descriptions of the provisions of the environmental easement including any land use, and groundwater use restrictions;
- provisions for the management and inspection of the identified engineering controls;
- maintaining site access controls and Department notification; and
- the steps necessary for the periodic reviews and certification of the institutional and/or engineering controls.

b. a Monitoring Plan to assess the performance and effectiveness of the remedy. The plan includes, but may not be limited to:

- monitoring of sewer water and sediment PCB content to assess the performance and effectiveness of the remedy;
- a schedule of monitoring and frequency of submittals to the Department.

New York State Department of Health Acceptance

The New York State Department of Health (NYSDOH) concurs that the remedy for this site is protective of human health.

Declaration

The selected remedy is protective of human health and the environment, complies with State and Federal requirements that are legally applicable or relevant and appropriate to the remedial action to the extent practicable, and is cost effective. This remedy utilizes permanent solutions and alternative treatment or resource recovery technologies, to the maximum extent practicable, and satisfies the preference for remedies that reduce toxicity, mobility, or volume as a principal element.

March 27,2012

Date

Robert W. Schick, P.E., Acting Director
Division of Environmental Remediation

RECORD OF DECISION

Amtrak Sunnyside Yard
Long Island City, Queens County
Site No. 241006
March 2012

SECTION 1: SUMMARY AND PURPOSE

The New York State Department of Environmental Conservation (the Department), in consultation with the New York State Department of Health (NYSDOH), has selected a remedy for the above referenced site. The disposal of hazardous wastes at the site has resulted in threats to public health and the environment that would be addressed by the remedy. The disposal or release of hazardous wastes at this site, as more fully described in this document, has contaminated various environmental media. The remedy is intended to attain the remedial action objectives identified for this site for the protection of public health and the environment. This Record of Decision (ROD) identifies the selected remedy, summarizes the other alternatives considered, and discusses the reasons for selecting the remedy.

The New York State Inactive Hazardous Waste Disposal Site Remedial Program (also known as the State Superfund Program) is an enforcement program, the mission of which is to identify and characterize suspected inactive hazardous waste disposal sites and to investigate and remediate those sites found to pose a significant threat to public health and environment.

The Department has issued this document in accordance with the requirements of New York State Environmental Conservation Law and 6 NYCRR Part 375. This document is a summary of the information that can be found in the site-related reports and documents.

SECTION 2: CITIZEN PARTICIPATION

The Department seeks input from the community on all remedies. A public comment period was held, during which the public was encouraged to submit comment on the proposed remedy. All comments on the remedy received during the comment period were considered by the Department in selecting a remedy for the site. Site-related reports and documents were made available for review by the public at the following document repository:

Queens Public Library
Sunnyside Branch
43-06 Greenpoint Avenue
Long Island City, NY 11101
Phone: (718) 784-3033

A public meeting was also conducted. At the meeting, the findings of the remedial investigation

(RI) and the feasibility study (FS) were presented along with a summary of the proposed remedy. After the presentation, a question-and-answer period was held, during which verbal or written comments were accepted on the proposed remedy.

Comments on the remedy received during the comment period are summarized and addressed in the responsiveness summary section of the ROD.

Receive Site Citizen Participation Information By Email

Please note that the Department's Division of Environmental Remediation (DER) is "going paperless" relative to citizen participation information. The ultimate goal is to distribute citizen participation information about contaminated sites electronically by way of county email listservs. Information will be distributed for all sites that are being investigated and cleaned up in a particular county under the State Superfund Program, Environmental Restoration Program, Brownfield Cleanup Program, Voluntary Cleanup Program, and Resource Conservation and Recovery Act Program. We encourage the public to sign up for one or more county listservs at http://www.dec.ny.gov/chemical/61092.html

SECTION 3: SITE DESCRIPTION AND HISTORY

Location:
Sunnyside Yard (the Site) is located at 39-29 Honeywell Street, Long Island City, Queens County, New York.

Site Features:
The Site is a railroad maintenance and storage facility that currently encompasses approximately 133 acres. Newtown Creek, which defines the border between Queens and Kings Counties, is located less than 0.5 mile south of the western portion of the Site. The Site is bordered by commercial/residential properties, with Northern Boulevard located to the north, 42nd Place located to the east, Thompson Avenue to the west, and Skillman Avenue located to the south.

Current Zoning/Use:
The Site is located in Manufacturing Zone (M1-1) and used as a railroad maintenance and storage facility

Historic Use:
The Yard was originally constructed in the early 1900's by the Pennsylvania Tunnel and Terminal Company, a subsidiary of Pennsylvania Railroad (later known as the Penn Central Transportation Company). On April 1, 1976, the Consolidated Rail Corporation (Conrail) acquired the Site, and the same day conveyed it to AMTRAK, which has continued to operate it as a storage and maintenance facility for railroad rolling stock. Prior to September 29, 1961, a portion of the yard was owned by Long Island Rail Road (LIRR). Today, the LIRR maintains a right-of-way through the Yard. The Long Island Railroad (LIRR) is constructing tunnels through the Yard as part of its East Side Access (ESA) project. An extensive cleanup program was completed in 1996 to remove PCB contaminated sediment from impacted sewer manholes with subsequent sampling to identify sewer segments and manholes with recurring PCB contaminated

sediment impacts.

Operable Units:
The site is divided into six operable units. An operable unit represents a portion of a remedial program for a site that for technical or administrative reasons can be addressed separately to investigate, eliminate or mitigate a release, threat of release or exposure pathway resulting from the site contamination. The operable units for this site are:

Operable unit 1 (OU1) is the soil above the water table within the footprint of the High Speed Trainset Facility Service and Inspection (HSTF S and I) Building.

Operable unit 2 (OU2) is the soil above the water table within the footprint of the HSTF S and I Building ancillary structures.

Operable unit 3 (OU3) is the soil and separate phase petroleum hydrocarbon accumulation above the water table and soil below the water table within 8 acres in the north central portion of the Site.

Operable unit 4 (OU4) is the soil above the water table (unsaturated zone) at the Site, excluding OU-1, OU-2, and OU-3.

Operable unit 5 (OU5) is the sewer system (water and sediment) beneath the Site.

Operable unit 6 (OU6) is the groundwater and saturated soil beneath the Site.

Site Geology and Hydrology:
Historic fill on the Site is predominantly comprised of reworked glacial deposits (unstratified sand, silt, clay and gravel) and railroad ballast, with lesser amounts of ash, cinders and construction debris. With the exception of paved areas, land occupied by buildings, and vegetated areas, the railroad ballast is ubiquitous at the land surface throughout the Site.

Groundwater beneath the Site occurs in fill deposits, wetlands, or the Upper Pleistocene glacial deposits. The saturated Upper Pleistocene deposits comprise the Upper Glacial aquifer. The depth to groundwater across the Site varies from one to fifteen feet below ground surface.

Groundwater within the shallow deposits flows predominantly west across the Site. However, groundwater between Queens Boulevard and Honeywell Street flows northerly and northwesterly toward the buried flow path of the Dutch Kills Creek and/or East River. In the deeper deposits, groundwater predominantly flows west across the Site.

Operable Unit (OU) Number 05 is the subject of this document.

A Record of Decision was issued previously for OU 01, 02, 03, 04, and 06.

A site location map is attached as Figure 1.

SECTION 4: LAND USE AND PHYSICAL SETTING

The Department may consider the current, intended, and reasonably anticipated future land use of the site and its surroundings when evaluating a remedy for soil remediation. For this site, alternatives (or an alternative) that restrict(s) the use of the site to industrial use as described in Part 375-1.8(g) were/was evaluated in addition to an alternative which would allow for unrestricted use of the site.

A comparison of the results of the RI to the appropriate standards, criteria and guidance values (SCGs) for the identified land use and the unrestricted use SCGs for the site contaminants is included in the Tables for the media being evaluated in Exhibit A.

SECTION 5: ENFORCEMENT STATUS

Potentially Responsible Parties (PRPs) are those who may be legally liable for contamination at a site. This may include past or present owners and operators, waste generators, and haulers.

The PRPs for the site, documented to date, include:

Amtrak and New Jersey Transit Corp

A Remedial Design/Remedial Action Order on Consent and Administrative Settlement lndex No. W2-0081-08-10 was executed on April 15, 2010, which supersedes the Remedial Investigation/Feasibility Study Order on Consent, Index No. W2-008187-06 dated September 21, 1989, amended August 25, 1993 and February 4, 1998.

SECTION 6: SITE CONTAMINATION

6.1: Summary of the Remedial Investigation

A Remedial Investigation (RI) has been conducted. The purpose of the RI was to define the nature and extent of any contamination resulting from previous activities at the site. The field activities and findings of the investigation are described in the RI Report.

The following general activities are conducted during an RI:

- Research of historical information,
- Geophysical survey to determine the lateral extent of wastes,
- Test pits, soil borings, and monitoring well installations,
- Sampling of waste, surface and subsurface soils, groundwater, and soil vapor,
- Sampling of surface water and sediment,

- Ecological and Human Health Exposure Assessments.

The analytical data collected on this site includes data for:

- sediment

6.1.1: Standards, Criteria, and Guidance (SCGs)

The remedy must conform to promulgated standards and criteria that are directly applicable or that are relevant and appropriate. The selection of a remedy must also take into consideration guidance, as appropriate. Standards, Criteria and Guidance are hereafter called SCGs.

To determine whether the contaminants identified in various media are present at levels of concern, the data from the RI were compared to media-specific SCGs. The Department has developed SCGs for groundwater, surface water, sediments, and soil. The NYSDOH has developed SCGs for drinking water and soil vapor intrusion. The tables found in Exhibit A list the applicable SCGs in the footnotes. For a full listing of all SCGs see: http://www.dec.ny.gov/regulations/61794.html

6.1.2: RI Results

The data have identified contaminants of concern. A "contaminant of concern" is a hazardous waste that is sufficiently present in frequency and concentration in the environment to require evaluation for remedial action. Not all contaminants identified on the property are contaminants of concern. The nature and extent of contamination and environmental media requiring action are summarized in Exhibit A. Additionally, the RI Report contains a full discussion of the data. The contaminant(s) of concern identified for this Operable Unit at this site is/are:

Polychlorinated Biphenyls (PCB)

As illustrated in Exhibit A, the contaminant(s) of concern exceed the applicable SCGs for:

- sediment

6.2: Interim Remedial Measures

An interim remedial measure (IRM) is conducted at a site when a source of contamination or exposure pathway can be effectively addressed before issuance of the Record of Decision.

The following IRM(s) has/have been completed at this site based on conditions observed during the RI.

IRM Manhole MH-6

In October of 2011, remediation and rehabilitation activities in MH-6 was undertaken. This work included the removal of sediment and water through the use of a vacuum truck. Further, all

relic, inactive pipes entering MH-6 were sealed using inflatable packers followed by plugging with concrete. Additionally, cracks within MH-6 were sealed in an effort to reduce groundwater infiltration into the manhole. A post remediation water sample was collected from the bottom of MH-6 and submitted for PCB analysis. PCBs were not detected in this sample, confirming that remediation activities in MH-6 were effective.

6.3: Summary of Environmental Assessment

This section summarizes the assessment of existing and potential future environmental impacts presented by the site. Environmental impacts may include existing and potential future exposure pathways to fish and wildlife receptors, wetlands, groundwater resources, and surface water.

Based upon the resources and pathways identified and the toxicity of the contaminants of ecological concern at this site, a Fish and Wildlife Resources Impact Analysis (FWRIA) was deemed not necessary for OU 05.

Nature and Extent of Contamination:

Operable Unit 5:

Sewer Sediment: PCBs were detected in 29 samples of sediment from the sewers at concentrations ranging from 0.053 mg/kg at MH-69 to 120 mg/kg at MH-6. PCB concentrations at MH-6 (one sample) and MH-38 (two samples) exceeded the 25 mg/kg NYSDEC-approved site specific soil cleanup level. MH-6 has been remediated as an IRM in October 2011.

Sewer Water: Discrete water samples (filtered and unfiltered) were collected from 12 manhole locations and analyzed for PCBs during performance of the OU-5 RI. PCBs were detected in 17 of 39 unfiltered samples with concentrations ranging from 0.14 ug/L to a high of 83 ug/L. Five of the unfiltered samples, one from MH-3, three from MH-6 and one from MH-40 exceeded the 1 ug/L waste water effluent limit. The waste water effluent limit is appropriate since the sewer discharges to a Waste Water Treatment Plant. Only one of the 39 filtered samples (MH-3) contained PCBs at a concentration (1.8 ug/L) slightly exceeding the 1 ug/L waste water effluent limit.

6.4: Summary of Human Exposure Pathways

This human exposure assessment identifies ways in which people may be exposed to site-related contaminants. Chemicals can enter the body through three major pathways (breathing, touching or swallowing). This is referred to as *exposure.*

Groundwater in the area of the site is not used as a source of potable water. Access to the site is controlled, preventing trespassers from coming in contact with contaminated soils.

6.5: Summary of the Remediation Objectives

The objectives for the remedial program have been established through the remedy selection process stated in 6 NYCRR Part 375. The goal for the remedial program is to restore the site to pre-disposal conditions to the extent feasible. At a minimum, the remedy shall eliminate or mitigate all significant threats to public health and the environment presented by the contamination identified at the site through the proper application of scientific and engineering principles.

The remedial action objectives for this site are:

Sediment

RAOs for Public Health Protection

- Prevent direct contact with contaminated sediments.

RAOs for Environmental Protection

- Restore sediments to pre-release/background conditions to the extent feasible.

SECTION 7: SUMMARY OF THE SELECTED REMEDY

To be selected the remedy must be protective of human health and the environment, be cost-effective, comply with other statutory requirements, and utilize permanent solutions, alternative technologies or resource recovery technologies to the maximum extent practicable. The remedy must also attain the remedial action objectives identified for the site, which are presented in Section 6.5. Potential remedial alternatives for the Site were identified, screened and evaluated in the feasibility study (FS) report.

A summary of the remedial alternatives that were considered for this site is presented in Exhibit B. Cost information is presented in the form of present worth, which represents the amount of money invested in the current year that would be sufficient to cover all present and future costs associated with the alternative. This enables the costs of remedial alternatives to be compared on a common basis. As a convention, a time frame of 30 years is used to evaluate present worth costs for alternatives with an indefinite duration. This does not imply that operation, maintenance, or monitoring would cease after 30 years if remediation goals are not achieved. A summary of the Remedial Alternatives Costs is included as Exhibit C.

The basis for the Department's remedy is set forth at Exhibit D.

The selected remedy is referred to as the Cleaning of Manholes MH-38 and MH-40 and Sewer System Monitoring remedy.

The estimated present worth cost to implement the remedy is $947,000. The cost to construct the remedy is estimated to be $927,000 and the estimated average annual cost is $20,000.

The elements of the selected remedy are as follows:

1. Remedial Design:

A remedial design program will be implemented to provide the details necessary for the construction, operation, maintenance, and monitoring of the remedial program. Green remediation principles and techniques will be implemented to the extent feasible in the design, implementation, and site management of the remedy as per DER-31. The major green remediation components are as follows;

- Considering the environmental impacts of treatment technologies and remedy stewardship over the long term;
- Conserving and efficiently managing resources and materials;
- Integrating the remedy with the end use where possible and encouraging green and sustainable re-development.

2. Sediment and Sewer Water Removal:

A weir located in a vault nearby and just downstream of MH-40 serves as a sediment trap, collecting impacted sediments at this location. In addition, manhole MH-40 represents the collection point for the three sewer legs containing the manholes of concern and it is the furthest downstream manhole located in OU-5. This weir will continue to operate as a sediment trap. MH-38 and MH-40 are the key locations for remediation.

All sediment and water present within manholes MH-38 and MH-40 (including the aforementioned weir) will be removed using a combination of hydraulic jetting coupled with mechanical vacuum recovery. Hydraulic (jetting) of sewer manholes and sediment removal utilize high water velocity to clean the sewer interior walls and manhole structure. Hydraulic jetting directs a high pressure stream of water directly at the interior surfaces to be cleaned. Jetting equipment is most often teamed with a high-powered vacuum unit that mechanically removes and containerizes the waste from the manhole location. Jetting is commonly used for relatively small diameter, low flow sewers.

Site-specific soil cleanup objectives (SCOs) relevant to the planned use of the site will be used to guide removal of contaminated sewer sediment. On-site sediment and water which exceed site-specific SCOs will be excavated and transported off-site for disposal. The site-specific SCOs are: 25 mg/kg for total PCBs in sediment and 1 µg/l for total PCBs in sewer water.

Approximately 11,000 gallons of PCB contaminated sediment and water will be removed and disposed of in accordance with all federal, state and local rules and regulations.

3. Institutional Control:

Imposition of an institutional control in the form of an environmental easement, upon remediation of the entire site, to include the controlled property that:

- requires the site owner to complete and submit to the Department a periodic certification of institutional and engineering controls in accordance with Part 375-1.8 (h)(3);
- allows the use and development of the controlled property for industrial use as defined by Part 375-1.8(g), although land use is subject to local zoning laws;
- restricts the use of groundwater as a source of potable or process water, without necessary water quality treatment as determined by the NYSDOH or NYC DOH;

- prohibits agriculture or vegetable gardens on the controlled property; and
- requires compliance with the Department approved Site Management Plan.

4. Site Management Plan:

A Site Management Plan is required, which includes the following:

a. an Institutional and Engineering Control Plan that identifies all use restrictions and engineering controls for the site and details the steps and media-specific requirements necessary to ensure the following institutional and/or engineering controls remain in place and effective:

Institutional Controls: The Environmental Easement discussed above, notification to all parties of contamination existing in the sewers.

Engineering Controls: The existing site perimeter fence and gate with guard and maintenance of Manhole covers to restrict access to the Site.

This plan includes, but may not be limited to:

- a Sediment Removal Plan which details the provisions for management of future sediment removal in areas of remaining contamination;
- descriptions of the provisions of the environmental easement including any land use, and groundwater use restrictions;
- provisions for the management and inspection of the identified engineering controls;
- maintaining site access controls and Department notification; and
- the steps necessary for the periodic reviews and certification of the institutional and/or engineering controls.

b. a Monitoring Plan to assess the performance and effectiveness of the remedy. The plan includes, but may not be limited to:

- monitoring of sewer water and sediment PCB content to assess the performance and effectiveness of the remedy;
- a schedule of monitoring and frequency of submittals to the Department.

Exhibit A

NATURE AND EXTENT OF CONTAMINATION

This section describes the findings of the Remedial Investigation for all environmental media that were evaluated. As described in Section 6.1, samples were collected from various environmental media to characterize the nature and extent of contamination.

For each medium, a table summarizes the findings of the investigation. The tables present the range of contamination found at the site in the media and compares the data with the applicable SCGs for the site. For comparison purposes, the SCGs are provided for each medium.

Waste/Source Areas

As described in the RI report, waste/source materials were identified at the site and are impacting water and sediment in the combined sewers within the Yard.

Wastes are defined in 6 NYCRR Part 375-1.2 (aw) and include solid, industrial and/or hazardous wastes. Source Areas are defined in 6 NYCRR Part 375 (au). Source areas are areas of concern at a site were substantial quantities of contaminants are found which can migrate and release significant levels of contaminants to another environmental medium. Wastes and Source areas were identified at the site include,

Remedial investigations (RIs) performed in OU-3, OU-4, and OU-5 have determined that PCBs are the primary contaminant of concern (COC) at the Yard, and the potential sources of PCB contamination that would impact the primary sewer system are:

1) The primary sewer system (OU5) is partially located beneath OU-3, and historically PCBs were the primary COC found in OU-3 (i.e., historically the PCB-containing mobile SPH plume and surface runoff could have impacted the primary sewer system).
2) The majority of stationary PCB-containing transformers that are known to have leaked are located within the body tracks (equipped with track drains). Trains equipped with PCB-containing transformers were stored on the body tracks and represent an additional source of PCBs to the primary sewer system via the track drains.

The waste/source areas identified will be addressed in the remedy selection process.

Sewer Water

Starting on October 11, 2010 through March 17, 2011, the OU-5 RI sewer water sampling plan was implemented. In all, 78 discrete water samples (39 filtered and 39 unfiltered) were collected from 12 manhole locations and analyzed for PCBs during performance of the OU-5 RI. PCBs were detected in 17 of 39 unfiltered samples with concentrations ranging from 0.14 µg/L to a high of 83 µg/L.

Five of these unfiltered samples, one from MH-3, three from MH-6 and one from MH-40 exceeded the 1 µg/L waste water effluent limit. Only one of the 39 filtered samples (MH-3) contained PCBs at a concentration (1.8 µg/L) slightly exceeding the 1 µg/L waste water effluent limit.

Table 1 - Sewer Water

Detected Constituents	Concentration Range Detected (μg/l or ppb)[a]	SCG[b] (μg/l or ppb)	Frequency Exceeding SCG
Total PCBs	0.14 to 83	1.0	Unfiltered: 5 out of 39 Filtered: 1 out of 39

a - ppb: parts per billion, which is equivalent to micrograms per liter, ug/L, in water.
b-SCG: The NYCDEP Effluent Limit for the sewer system that ultimately discharges to Bowery Bay Wastewater Treatment Plant

Based on the findings of the Remedial Investigation, the presence of PCBs has resulted in the contamination of sewer water. The site contaminants that are considered to be the primary contaminants of concern which will drive the remediation of sewer water to be addressed by the remedy selection process are PCBs.

Sewer Sediments

Along with the sewer water samples, 32 discrete sediment samples were collected from 12 manhole locations and analyzed for PCBs during performance of the OU-5 RI. PCBs were detected in 29 of these samples at concentrations ranging from 0.153 mg/kg at manhole MH-69 to 120mg/kg at manhole MH-6.

PCB concentrations at MH-6 (one sample) and MH-38 (two samples) exceeded the 25 mg/kg NYSDEC-recommended soil cleanup level for the Yard.

Table 2 – Sewer Sediment

Detected Constituents	Concentration Range Detected (mg/kg or ppm)[a]	SCG[b] (mg/kg or ppm)	Frequency Exceeding SCG
Total PCBs	0.053 to 120	25	3 out of 32

a - ppm: parts per million, which is equivalent to milligrams per kilogram, mg/kg, in sediment;
b - SCG: The 6NYCRR375-6.8 Industrial Soil Cleanup Objective.

Based on the findings of the Remedial Investigation, the presence of PCBs has resulted in the contamination of sediment. The site contaminants that are considered to be the primary contaminants of concern which will drive the remediation of sediment to be addressed by the remedy selection process are PCBs

Exhibit B

DESCRIPTION OF REMEDIAL ALTERNATIVES

The following alternatives were considered based on the remedial action objectives (see Section 6.5) to address the contaminated media identified at the site as described in Exhibit A.

Alternative 1: No Further Action

The No Further Action Alternative recognizes the remediation of the site completed by the IRM(s) described in Section 6.2. This alternative leaves the site in its present condition and does not provide any additional protection of the environment.

A no action alternative is evaluated to provide a baseline for comparison of potential risks posed if no remedial action were performed. For this remedial alternative, all sewer sediment and water with PCB concentrations exceeding the Site-specific soil cleanup level would remain in place.

Alternative 2: Sewer System Monitoring and Deferred Cleanout of Sewer Manholes of Concern (Post OU-3 and OU-4 Remediation and ESA Construction)

This alternative would include periodic monitoring of the manhole MH-40 and identifying trends in PCB occurrence in sewer sediment and water and future cleaning of the sewer manhole. The rationale for selecting MH-38 and MH-40 as key locations for remediation as part of this Remedial Alternative is provided below:

MH-38
Manholes MH-38 and MH-6 were the only manholes to contain sediment that exceeded the SCG during the 2010/2011 OU-5 RI sampling events. Amtrak has already remediated MH-6 as an IRM completed in October 2011. Therefore, MH-38 is the only location with a remaining, recent exceedance of the sediment SCG

MH-40
The cleanout of MH-40 would be the key component of this Remedial Alternative. As described in the OU-5 RI Report, in 1997 the New York City Transit Authority (NYCTA) installed a weir within MH-40. This weir was installed as part of the construction of a new offsite sewer siphon located downstream of MH-40. The sewer siphon was part of a NYCTA subway expansion project, completely independent and unrelated to Amtrak's Sunnyside Yard. Although the NYCTA's project is unrelated to Sunnyside Yard, the weir installed by NYCTA in MH-40 serves as a sediment trap, removing impacted sediments at this location. In addition, MH-40 represents the collection point for the three sewer legs containing the manholes of concern and it is the furthest downstream manhole in located in OU-5.

Sewer water and sediment samples would be collected from manhole MH-40 every two years and submitted for PCB analysis. During each event, samples would be collected both during dry conditions and during post-precipitation conditions. The monitoring program would continue until remediation efforts in OU-3 and OU-4 are completed and East Side Access (ESA) Construction is completed, at which time cleaning of the sewer manholes MH-38 and MH-40 would be performed. All sediment and water present within manholes MH-38 and MH-40 would be removed using a combination of hydraulic jetting coupled with mechanical vacuum recovery. The manhole interior would be thoroughly washed and rinsed to remove adhered sediment. The sediment and wash water generated during the cleaning of these manholes would be collected using a vacuum truck and containerized for offsite disposal. A gravity separator would likely be required to separate solids and water prior

to disposal of both media. Waste material would be sampled for waste characterization and disposed of accordingly.

Following the cleaning of MH-38 and MH-40, a routine monitoring plan consisting of sampling MH-40 and identifying trends in PCB occurrence in sewer sediment and water would commence.

Sewer water and sediment samples would be collected every two years and submitted for PCB analysis. During each event, samples would be collected both during dry conditions and during post-precipitation conditions. The monitoring program would continue until remediation efforts in OU-3 and OU-4 are completed, ESA construction is completed, and two consecutive rounds of data are obtained from MH-40 without any exceedances of the sediment or water SCGs. This approach will ensure that any PCB-containing sediment located in sewer legs between manholes will ultimately be recovered from the sediment trap in MH-40. Should monitoring identify an exceedance of either the sediment or water SCG, additional cleanout of MH-40 will be completed and continued monitoring will be required.

Present Worth: *$967,414*
Capital Cost: *$927,201*
Annual Costs: *$40,213*

Alternative 3: Cleaning of Manholes MH-38 and MH-40 and Sewer System Monitoring

This alternative consists of the same elements as Remedial Alternative 2, however rather than defer OU-5 sewer system remediation until after the completion of OU-3 and OU-4 remediation and completion of ESA construction OU-5 remediation would begin immediately. In the near term, manholes MH-38 and MH-40 will be accessed and cleaned using similar method as Alternative 2. The rationale for selecting MH-38 and MH-40 as key locations for remediation and the cleaning and monitoring plans which are part of this Remedial Alternative are provided below:

MH-38
Manholes MH-38 and MH-6 were the only manholes to contain sediment that exceeded the SCG during the 2010/2011 OU-5 RI sampling events. Amtrak has already remediated MH-6 as an IRM completed in October 2011. Therefore, MH-38 is the only location with a remaining, recent exceedance of the sediment SCG. In the interest of proactively remediating this exceedance and preventing potential migration, the prompt remediation of MH-38 was included as a component to this Remedial Alternative.

MH-40
The cleanout of MH-40 would be the key component of this Remedial Alternative. As described in the OU-5 RI Report, in 1997 the New York City Transit Authority (NYCTA) installed a weir within MH-40. This weir was installed as part of the construction of a new offsite sewer siphon located downstream of MH-40. The sewer siphon was part of a NYCTA subway expansion project, completely independent and unrelated to Amtrak's Sunnyside Yard. Although the NYCTA's project is unrelated to Sunnyside Yard, the weir installed by NYCTA in MH-40 serves as a sediment trap, removing impacted sediments at this location. In addition, MH-40 represents the collection point for the three sewer legs containing the manholes of concern and it is the furthest downstream manhole in located in OU-5.

All sediment and water present within manholes MH-38 and MH-40 would be removed using a combination of hydraulic jetting coupled with mechanical vacuum recovery. The manhole interior would be thoroughly washed

and rinsed to remove adhered sediment. The sediment and wash water generated during the cleaning of these manholes would be collected using a vacuum truck and containerized for offsite disposal. A gravity separator would likely be required to separate solids and water prior to disposal of both media. Waste material would be sampled for waste characterization and disposed of accordingly.

Following the cleaning of MH-38 and MH-40, a routine monitoring plan consisting of sampling MH-40 and identifying trends in PCB occurrence in sewer sediment and water would commence.

Sewer water and sediment samples would be collected every two years and submitted for PCB analysis. During each event, samples would be collected both during dry conditions and during post-precipitation conditions. The monitoring program would continue until remediation efforts in OU-3 and OU-4 are completed, ESA construction is completed, and two consecutive rounds of data are obtained from MH-40 without any exceedances of the sediment or water SCGs. This approach will ensure that any PCB-containing sediment located in sewer legs between manholes will ultimately be recovered from the sediment trap in MH-40. Should monitoring identify an exceedance of either the sediment or water SCG, additional cleanout of MH-40 will be completed and continued monitoring will be required.

Present Worth: *$946,976*
Capital Cost: *$927,201*
Annual Costs: *$19,775*

Exhibit C

REMEDIAL ALTERNATIVE COSTS

Remedial Alternative	Capital Cost ($)	Annual Costs ($)	Total Present Worth ($)
Alternative 1: No Further Action	0	0	0
Alternative 2: Sewer System Monitoring and Deferred Cleanout of Sewer Manholes of Concern (Post OU-3 and OU-4 Remediation and ESA Construction)	$927,000	$40,000	$967,000
Alternative 3: Cleaning of MH-38 and MH-40 and Sewer System Monitoring	$927,000	$20,000	$947,000

Exhibit D

SUMMARY OF THE SELECTED REMEDY

The Department has selected Alternative 3, Cleaning of MH-38 and MH-40 and Sewer System Monitoring as the remedy for this site. Alternative 3 will achieve the remediation goals for the site by removing all contaminated water and sediments from the sewer. The elements of this remedy are described in Section 7.

Basis for Selection

The selected remedy is based on the results of the RI and the evaluation of alternatives. The criteria to which potential remedial alternatives are compared are defined in 6 NYCRR Part 375. A detailed discussion of the evaluation criteria and comparative analysis is included in the FS report.

The first two evaluation criteria are termed "threshold criteria" and must be satisfied in order for an alternative to be considered for selection.

With the exception of the timing of cleaning of manholes MH-38 and MH-40, Remedial Alternative 2 and 3 are very similar in their approach. Therefore, an in-depth comparison of these two alternatives is not provided below. Alternative 3 provides a more immediate removal of PCB-impacted sediments posing a threat to offsite migration within the sewer system compared to Alternative 2. Alternative 3 therefore, more fully satisfies the criteria of overall protection of the environment and reduction of toxicity and mobility.

The detailed comparison of the Alternatives is given below:

1. Protection of Human Health and the Environment. This criterion is an overall evaluation of each alternative's ability to protect public health and the environment.

The proposed Alternative #3 would satisfy this criterion by removing sewer media exhibiting hazardous concentrations and exceeding chemical-specific SCGs; and preventing offsite migration. Protection is provided by removing PCB-impacted sewer sediment and water exceeding the chemical-specific SCGs. Institutional and engineering controls would not be required to provide future protection to humans and the environment. Sediment exhibiting hazardous concentrations would be scheduled for removal immediately, followed by monitoring and additional cleanout (if required). This would continue until the completion of the OU-3 and OU-4 remediation, and ESA construction, and until two consecutive rounds of monitoring confirms no exceedances of the SCGs in MH-40. Therefore, the risk for impacts to OU-5 and offsite migration via the sewer system would be completely removed.

Alternative 2 has the same elements as Alternative 3, and would also satisfy this criterion. Alternative 1 does not provide any protection to public health and the environment and will not be evaluated further.

2. Compliance with New York State Standards, Criteria, and Guidance (SCGs). Compliance with SCGs addresses whether a remedy will meet environmental laws, regulations, and other standards and criteria. In addition, this criterion includes the consideration of guidance which the Department has determined to be applicable on a case-specific basis.

The proposed remedy Alternative 3 would comply with the applicable chemical and action-specific SCGs for the media of concern.

Specifically, Remedial Alternative 3 would:

- Satisfy the 6 NYCRR Part 375 goal to eliminate or mitigate all significant threats to
- public health and the environment;
- Effectively remove "consequential" amounts of NYS listed hazardous waste in
- accordance with 6 NYCRR Part 375;
- Comply with all TSCA low occupancy PCB Remediation cleanup requirements; and
- Comply with removing impacted media exceeding the chemical-specific SCGs.

Alternative 2 would also comply with the applicable chemical and action specific SCGs. Because Alternatives 2 and 3satisfy the threshold criteria, the remaining criteria are particularly important in selecting a final remedy for the site.

The next six "primary balancing criteria" are used to compare the positive and negative aspects of each of the remedial strategies.

3. Long-term Effectiveness and Permanence. This criterion evaluates the long-term effectiveness of the remedial alternatives after implementation. If wastes or treated residuals remain on-site after the selected remedy has been implemented, the following items are evaluated: 1) the magnitude of the remaining risks, 2) the adequacy of the engineering and/or institutional controls intended to limit the risk, and 3) the reliability of these controls.

The proposed remedy Alternative 3 provides long-term effectiveness through the permanent removal of PCB-impacted sewer sediment and water. All material would be transferred to an offsite disposal facility equipped to properly manage this material.

Alternative 2 also provides long-term effectiveness and permanence however at an undefined point in the future.

4. Reduction of Toxicity, Mobility or Volume. Preference is given to alternatives that permanently and significantly reduce the toxicity, mobility or volume of the wastes at the site.

Alternatives 2 and 3 would remove hazardous concentrations of PCBs in the near term and alleviate mobility concerns. Sediment removal and sewer cleaning would effectively reduce the toxicity, mobility, and volume of sediment with PCB concentrations exceeding the Yard soil cleanup levels. As demonstrated by the OU-5 RI, PCB-impacted sewer water is attributed to suspended sediment in the water samples. Therefore, the toxicity, mobility, and volume of impacted sewer water will also be reduced via sediment removal and sewer cleaning, with this reduction occurring immediately for Alternative 3 rather than at an undefined future time for Alternative 2.

5. Short-term Impacts and Effectiveness. The potential short-term adverse impacts of the remedial action upon the community, the workers, and the environment during the construction and/or implementation are evaluated. The length of time needed to achieve the remedial objectives is also estimated and compared against the other alternatives.

A moderate level of short-term effects to remedial workers during sewer cleaning activities is associated with Alternative 3. Remedial workers will be required to perform confined space entry and will be in direct contact with sewer water, sediment, and vapors. Health and safety concerns would be reduced through verification that

all remedial workers possess up to date confined space entry training, personal protective equipment is used at all times (e.g., safety harnesses, respiratory protection), and use of mechanical equipment for cleaning as much as possible. A limited scope CAMP would be employed to monitor VOCs at the work area and site perimeter. Alternative 3 poses minimal short term risks to community. Waste materials will be contained in tanks or within vacuum trucks upon removal and throughout the transportation process to the disposal facility.

Alternative 2 would not be as effective in the short-term, since it delays the implementation of the remedy for at up to 10 years.

6. Implementability. The technical and administrative feasibility of implementing each alternative are evaluated. Technical feasibility includes the difficulties associated with the construction of the remedy and the ability to monitor its effectiveness. For administrative feasibility, the availability of the necessary personnel and materials is evaluated along with potential difficulties in obtaining specific operating approvals, access for construction, institutional controls, and so forth.

The sewer cleaning methods to be used for this remedial alternative are readily available. Experienced remedial contractors, specialized sewer contractors, and mechanical equipment are readily available to implement the remedial activities associated with this alternative.

Implementability concerns that do exist for this remedial alternative include access to MH-38 and MH-40. Personnel confined space access will most likely be required for cleanout of these manholes. Since the primary sewer system is a combined sewer system, there is the potential to encounter a significant volume of combined waste, which increases health and safety precautions. Although it is expected that mechanical equipment will be used for waste removal, vapors may be present causing an increased time to perform the work and increased personnel to account for shorter shifts while performing confined space entry work.

Access agreements would be required for cleaning of MH-40. Without an access agreement with MTA and possibly an off-site third party that allows a significant amount of work space for equipment and personnel, cleaning of this manhole in the near-term will not be possible. MH-38 is located within the body tracks. A significant level of coordination with Amtrak's Track Department will be required to arrange for trains to be removed from this area and ensure no damage to the tracks occurs during the cleaning. Mobilizing cleaning equipment to MH-38 will also require a significant amount of coordination and possibly mandate the use of specialized equipment (e.g., transport equipment via rail).

Implementability concerns posed by Alternative 1 do not exist since there would not be any actions performed.

7. Cost-Effectiveness. Capital costs and annual operation, maintenance, and monitoring costs are estimated for each alternative and compared on a present worth basis. Although cost-effectiveness is the last balancing criterion evaluated, where two or more alternatives have met the requirements of the other criteria, it can be used as the basis for the final decision.

Although Alternative 3 is the most comprehensive alternative, it still has a lower cost than Alternative 2.

Since there are no remedial actions for Alternative 1, there is no capital cost associated this alternative.

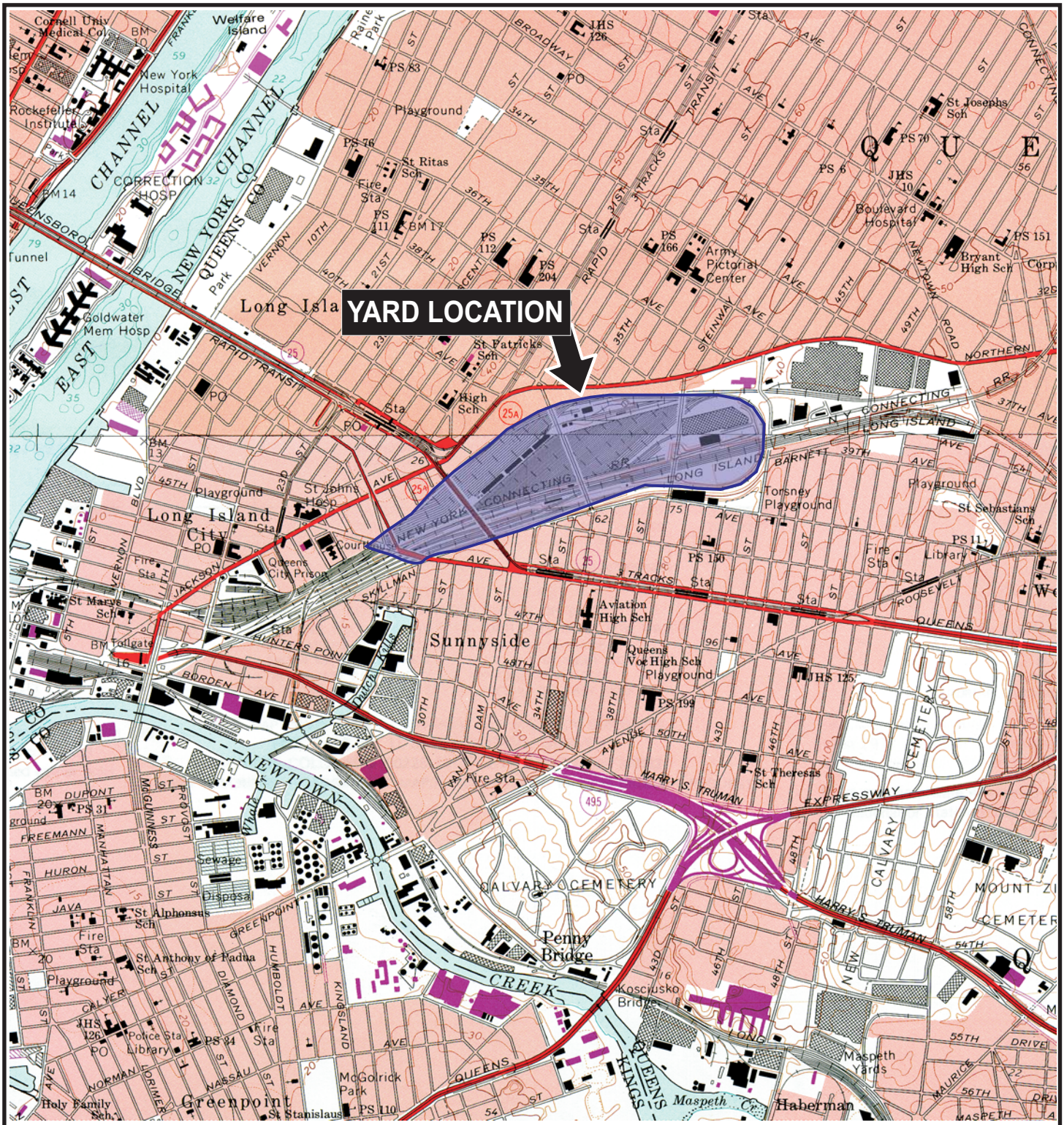

SOURCE:
CENTRAL PARK AND BROOKLYN, NEW YORK
QUADRANGLE 7.5 MINUTE SERIES (TOPOGRAPHIC)

QUADRANGLE LOCATION

N

0 2000'

Title:

LOCATION OF SITE

OU-5 FEASIBILITY STUDY

Prepared for:

AMTRAK

ROUX
ROUX ASSOCIATES, INC.
Environmental Consulting & Management

Compiled by: H.G.	Date: 17NOV11	FIGURE
Prepared by: J.A.D.	Scale: AS SHOWN	1
Project Mgr.: H.G.	Project No.: 0055.0050Y006	
File: 0055.0050Y125.05.CDR		

V:\CAD\PROJECTS\0055Y\0050Y\125\0055.0050Y125.05.CDR

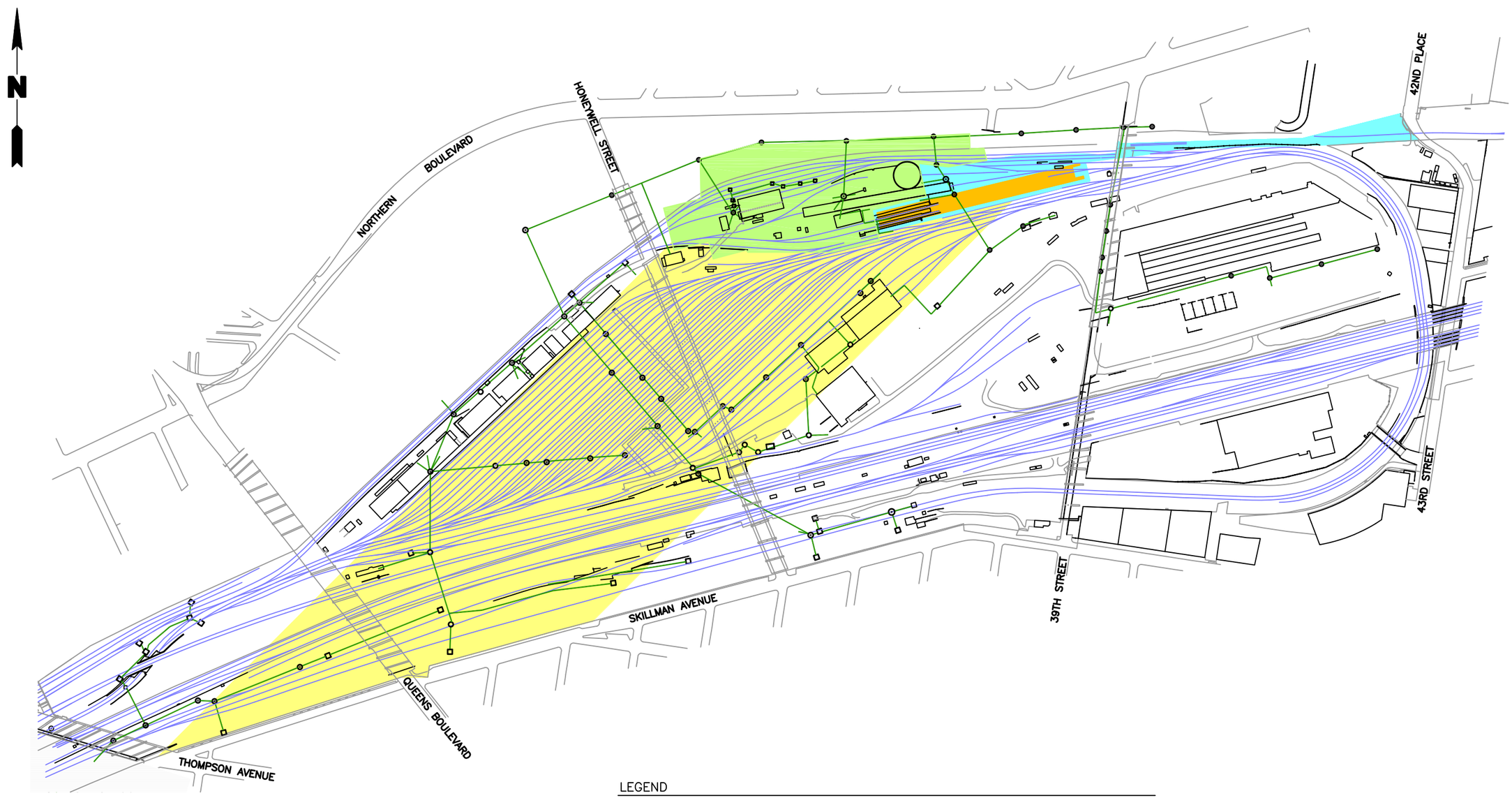

NOTES

1. LOCATIONS OF SEWER COMPONENTS BASED UPON A REVIEW OF AMTRAK–SUPPLIED ENGINEERING DIAGRAMS AND LIMITED FIELD SURVEY.
2. OU–6, GROUNDWATER BENEATH THE YARD (UNDERLIES ALL OTHER OU's)
3. LIRR – LONG ISLAND RAIL ROAD

LEGEND

- LOCATION OF RAILROAD TRACK
- APPROXIMATE LOCATION OF SEWER
- GRATE COVER CATCH BASIN LOCATION
- SOLID COVER MANHOLE LOCATION
- GRATE COVER MANHOLE LOCATION
- APPROXIMATE PROPERTY BOUNDARY

- OU–1
- OU–2
- OU–3
- OU–4
- OU–5

OU–6, GROUNDWATER BENEATH THE YARD (UNDERLIES ALL OTHER OU's)

400' 0 400'

Title:

AMTRAK YARD LAYOUT

OU–5 FEASIBILITY STUDY

Prepared For:

AMTRAK

ROUX

ROUX ASSOCIATES, INC.
Environmental Consulting and Management

Compiled by: H.G.	Date: 29NOV11	FIGURE
Prepared by: J.A.D.	Scale: AS SHOWN	2
Project Mgr: H.G.	Project: 0055.0050Y006	
File: 0055.0050Y125.06.DWG		

V:\CAD\PROJECTS\0055Y\0050Y\125\0055.0050Y125.06.DWG

Designation	MHW-3	MHW-3	MHWF-3	MHW-3	MHWF-3	MHW-3	MHWF-3	MHW-3	MHWF-3
Date	2/8/93	7/26/96	7/26/96	10/11/10	10/11/10	3/16/11	3/16/11	3/17/11	3/17/11
Total PCBs	ND	0.89	0.017	0.18 JV	ND	ND	ND	2.8	1.8

Designation	MHS-3	MH-3	MHS-3	MHS-3
Date	2/8/93	11/13/96	3/11/97	10/11/10
Total PCBs	54000	32500	1380	ND

Designation	MHS-6	MHS-6	MHS-6
Date	10/11/10	3/16/11	3/17/11
Total PCBs	120000 D	21000	15000 JV

Designation	CB-4
Date	11/2/96
Total PCBs	7390

Designation	MHW-6	MHW-6	MHW-6	MHWF-6	MHW-6	MHWF-6	MHW-6	MHWF-6
Date	2/8/93	7/26/96	10/11/10	10/11/10	3/16/11	3/16/11	3/17/11	3/17/11
Total PCBs	ND	0.015	83 D	ND	12	ND	16 JV	ND

Designation	MHW-40 (4x8)S	MHW-40 (48)E	MHWF-40 (48)E	MHW-40	MHWF-40	MHW-40	MHWF-40	MHW-40	MHWF-40	MHW-40	MHWF-40
Date	4/25/94	4/25/94	4/25/94	7/26/96	7/26/96	10/12/10	10/12/10	3/16/11	3/16/11	3/17/11	3/17/11
Total PCBs	ND	0.51	ND	0.62	0.015	2.1	ND	ND	ND	ND	ND

Designation	MHS-40 (4x8)S	MHS-40 (48)E	MHS-40	MH-40	MHS-40	MHS-40	MHS-40
Date	4/25/94	4/25/94	7/26/96	11/13/96	10/12/10	3/16/11	3/17/11
Total PCBs	15100	16200	148900	160000	ND	65	130

Designation	MHW-39	MHW-39 (24)S
Date	4/26/94	4/26/94
Total PCBs	0.20	ND

Designation	MHW-2	MHW-2 (4x8)N	MHWF-2 (4x8)N	MHW-2	MHWF-2	MHW-2 FROM MH-41	MHWF-2 FROM MH-41	MHW-2 FROM MH-55	MHWF-2 FROM MH-55
Date	2/9/93	4/26/94	4/26/94	7/26/96	7/26/96	10/12/10	10/12/10	10/12/10	10/12/10
Total PCBs	2.3	0.66	ND	0.224	0.1	0.26	ND	0.22 JV	ND

Designation	MHW-2 FROM MH-41	MHWF-2 FROM MH-41	MHW-2 FROM MH-55	MHWF-2 FROM MH-55	MHW-2 FROM MH-41	MHWF-2 FROM MH-41	MHW-2 FROM MH-55	MHWF-2 FROM MH-55
Date	3/16/11	3/16/11	3/16/11	3/16/11	3/17/11	3/17/11	3/17/11	3/17/11
Total PCBs	0.84	ND	0.72	ND	ND	ND	ND	ND

Designation	MHS-2	MHS-2	MHS-2 DL	MH-2	MHS-2 FROM MH-41	MHS-2 FROM MH-55	MHS-2FROM MH-41	MHS-2 FROM MH-55	MHS-2 FROM MH-41	MHS-2 FROM MH-55
Date	2/9/93	4/26/94	7/26/96	11/12/96	10/12/10	10/12/10	3/16/11	3/16/11	3/17/11	3/17/11
Total PCBs	82000	11900	54100	8760	1800	510	1200	2600 JV	920	1100

Designation	MHS-38	MHS-38	MHS-38
Date	10/12/10	3/16/11	3/17/11
Total PCBs	7800 D	30000	83000 JV

Designation	MHW-38	MHWF-38	MHW-38	MHWF-38	MHW-38	MHWF-38
Date	10/12/10	10/12/10	3/16/11	3/16/11	3/17/11	3/17/11
Total PCBs	ND	ND	0.92	ND	ND	ND

Designation	MHS-55	MH-55
Date	4/26/94	11/12/96
Total PCBs	25000	4300

Designation	MHS-52	MH-52	MHS-52	MHS-52	MHS-52	MHS-52
Date	4/26/94	11/12/96	3/11/97	10/12/10	3/16/11	3/17/11
Total PCBs	2900	8600	91100	540	340	310

Designation	MHW-52 (10)N	MHW-52 (18)SE	MHW-52 (42)SW	MHWF-52 (42)SW	MHW-52	MHW-52	MHWF-52	MHW-52	MHWF-52	MHW-52	MHWF-52
Date	4/26/94	4/26/94	4/26/94	4/26/94	7/26/96	10/12/10	10/12/10	3/16/11	3/16/11	3/17/11	3/17/11
Total PCBs	ND	ND	ND	ND	0.29	0.14 JV	ND	0.59	ND	ND	ND

Designation	MHW-51	MHWF-51	MHW-51	MHWF-51	MHW-51	MHWF-51
Date	10/12/10	10/12/10	3/16/11	3/16/11	3/17/11	3/17/11
Total PCBs	ND	ND	ND	ND	ND	ND

Designation	MHW-7
Date	2/8/93
Total PCBs	14.8

Designation	MH-5
Date	11/13/96
Total PCBs	18800

Designation	MHW-5	MHW-5
Date	2/8/93	7/26/96
Total PCBs	ND	0.077

Designation	MHW-8	MHW-8	MHWF-8	MHW-8	MHWF-8	MHW-8	MHWF-8
Date	2/9/93	10/11/10	10/11/10	3/16/11	3/16/11	3/17/11	3/17/11
Total PCBs	20.6	ND	ND	ND	ND	ND	ND

Designation	MH-11	MH-11	MHS-11	MHS-11
Date	3/11/97	10/11/10	3/16/11	3/17/11
Total PCBs	1000	520	500	380

Designation	MHW-11	MHWF-11	MHW-11	MHWF-11	MHW-11	MHWF-11
Date	10/11/10	10/11/10	3/16/11	3/16/11	3/17/11	3/17/11
Total PCBs	ND	ND	0.98	ND	ND	ND

Designation	MHS-8 DL	MH-8	MHS-8
Date	2/9/93	11/12/96	3/16/11
Total PCBs	4200	140	ND

Designation	MHS-29
Date	4/27/94
Total PCBs	170

Designation	MHW-29
Date	4/27/94
Total PCBs	ND

Designation	MH-69	MHW-69	MHWF-69	MHW-69	MHWF-69	MHW-69	MHWF-69
Date	4/28/94	10/12/10	10/12/10	3/16/11	3/16/11	3/17/11	3/17/11
Total PCBs	4.4	ND	ND	ND	ND	ND	ND

Designation	MHS-69 (18)NE	MHS-69 (36)E	MH-69	MHS-69	MHS-69	MHS-69
Date	4/28/94	4/28/94	11/12/96	10/12/10	3/16/11	3/17/11
Total PCBs	4700	29000	145	72	53	76

Designation	MHW-45	MHWF-45	MHW-45	MHWF-45	MHW-45	MHWF-45
Date	10/11/10	10/11/10	3/16/11	3/16/11	3/17/11	3/17/11
Total PCBs	0.23 JV	ND	0.3	ND	ND	ND

Designation	MHW-43
Date	4/27/94
Total PCBs	ND

Designation	MHS-35
Date	4/28/94
Total PCBs	950

Designation	MHS-45	MHS-45	MHS-45	MHS-45
Date	4/28/94	10/11/10	3/16/11	3/17/11
Total PCBs	1503	2050 JV	180	600

Designation	MHW-42	MHW-42	MHWF-42	MHW-42	MHWF-42	MHW-42	MHWF-42
Date	7/26/96	10/12/10	10/12/10	3/16/11	3/16/11	3/17/11	3/17/11
Total PCBs	0.91	0.24 JV	ND	1	ND	ND	ND

Designation	MHW-37
Date	7/26/96
Total PCBs	0.14

Designation	MHS-37	MH-37
Date	4/28/94	11/12/96
Total PCBs	9400	38000

Designation	MHS-42	MHS-42 DL	MH-42	MHS-42	MHS-42	MHS-42
Date	4/26/94	8/15/96	11/12/96	10/12/10	3/16/11	3/17/11
Total PCBs	51000	2610	5400	1410	900	1200 JV

200' 0 200'

LEGEND

PRIMARY SEWER SYSTEM (COMBINED SEWER SYSTEM)

SECONDARY SEWER SYSTEM (STORM SEWER SYSTEM)

REMOVED OR INOPERABLE SECTIONS OF SEWER SYSTEM

APPROXIMATE PROPERTY BOUNDARY

PRIVATE PROPERTY NOT OWNED BY AMTRAK

UNK-10 MANHOLE LOCATED IN THE FIELD BUT NOT SHOWN IN AVAILABLE SEWER MAPS

MH-2 LOCATION AND DESIGNATION OF SEWER MANHOLE WITH GRATE COVER

MH-5 LOCATION AND DESIGNATION OF SEWER MANHOLE WITH SOLID COVER

MH-66 LOCATION AND DESIGNATION OF SEWER MANHOLE NOT LOCATED OR COMPLETELY BURIED

CB-18 LOCATION AND DESIGNATION OF CATCH BASIN

CB-14 LOCATION AND DESIGNATION OF CATCH BASIN NOT LOCATED OR COMPETELY BURIED

48" DIAMETER OF SEWER PIPE (INCHES) DIRECTION OF SEWER FLOW

SEWER SEDIMENT

Designation	MHS-1
Date	4/28/94
Total PCBs	3500

← TOTAL CONCENTRATION MICROGRAMS PER KILOGRAM (µg/kg)

SEWER WATER

Designation	MHW-7
Date	2/8/93
Total PCBs	14.8

← TOTAL CONCENTRATION MICROGRAMS PER LITER (µg/L)

NOTES

1. IF SUFFICIENT QUANTITIES OF SEWER WATER AND/OR SEWER SEDIMENT WERE NOT PRESENT IN THE INFLUENT PIPES AT MULTIPLE INFLUENT SAMPLING LOCATIONS, BUT SEWER WATER AND/OR SEWER SEDIMENT WAS PRESENT IN THE MANHOLE, THEN THE SAMPLE WAS COLLECTED FROM THE MANHOLE BOTTOM AND THE SAMPLE DESIGNATION DOESN'T INDICATE A SAMPLING LOCATION.
2. DESIGNATIONS WITH THE LETTER "F" INDICATE A FILTERED SAMPLE.
3. DESIGNATIONS WITH THE LETTER "W" INDICATE A SEWER WATER SAMPLE.
4. DESIGNATIONS WITH THE LETTER "S" INDICATE A SEWER SEDIMENT SAMPLE.
5. DESIGNATIONS WITH THE PREFIX "DL" INDICATE A DILUTED SEWER SEDIMENT SAMPLE.
6. THE LETTER "J" INDICATES AN ESTIMATED VALUE
7. THE LETTER "V" INDICATES QUALIFIER ADDED AND/OR VALVE ALTERED DURING VALIDATION
8. THE LETTER "D" INDICATES A COMPOUND IDENTIFIED IN AN ANALYSIS AT A SECONDARY DILUTION
9. ND – PCB'S NOT DETECTED

Title:

SUMMARY OF TOTAL PCBs IN SEWER WATER AND SEDIMENT SAMPLES

OPERABLE UNIT 5 REMEDIAL INVESTIGATION REPORT
SUNNYSIDE YARD, QUEENS, NEW YORK

Prepared For:

AMTRAK

ROUX
ROUX ASSOCIATES, INC.
Environmental Consulting and Management

Compiled by: L.O.	Date: 12AUG11	PLATE
Prepared by: J.A.D.	Scale: AS SHOWN	2
Project Mgr: H.G.	Project: 0055.0050Y005	
File: 0055.0050Y122.04.DWG		

APPENDIX A

Responsiveness Summary

Responsiveness Summary

Amtrak Sunnyside Yard
Operable Unit No. 5
State Superfund Project
Long Island City, Queens County, New York
Site No. 241006

The Proposed Remedial Action Plan (PRAP) for Operable Unit No. 5 of the Amtrak Sunnyside Yard site, was prepared by the New York State Department of Environmental Conservation (the Department) in consultation with the New York State Department of Health (NYSDOH) and was issued to the document repositories on February 17, 2012. The PRAP outlined the remedial measure proposed for the contaminated sewer sediment at the Operable Unit No. 5 of the Amtrak Sunnyside Yard site.

The release of the PRAP was announced by sending a notice to the public contact list, informing the public of the opportunity to comment on the proposed remedy.

A public meeting was held on March 8, 2012, which included a presentation of the Remedial Investigation (RI) and the Feasibility Study (FS) as well as a discussion of the proposed remedy. The meeting provided an opportunity for citizens to discuss their concerns, ask questions and comment on the proposed remedy. These comments have become part of the Administrative Record for this site. The public comment period for the PRAP ended on March 19, 2012. No public comments were received.

APPENDIX B

Administrative Record

Administrative Record

Amtrak Sunnyside Yard
Operable Unit No. 5
State Superfund Project
Long Island City, Queens County, New York
Site No. 241006

Proposed Remedial Action Plan for the Amtrak Sunnyside yard site, Operable Unit No. 5, dated February 2012, prepared by the Department.

Order on Consent, Index No. W2-0081-08-10, between the Department and National Railroad Passenger Corporation (Amtrak) and New Jersey Transit Corporation (NJTC), executed on April 15, 2010.

"Phase I remedial Investigation – Sunnyside Yard, Queens, new York", January 1992, Roux Associates

"Work Plan for the Phase II Remedial Investigation – Sunnyside Yard, Queens, New York", August 1992, Roux associates

"Addendum to the August 5, 1992 Work Plan for the Phase II Remedial Investigation – Sunnyside Yard, Queens, New York", August 1993, Roux associates

"Work Plan for the Operable Unit 5 (OU-5) Remedial Investigation – Sunnyside Yard – Queens, New York", May, 2010, Roux Associates

"Operable Unit 5 (OU-5) Remedial Investigation Report – Sunnyside Yard – Queens, New York", August 2011, Roux Associates

"Operable Unit 5 (OU-5) Feasibility Study – Sunnyside Yard – Queens, New York", December 2011, Roux Associates