Biological efficacy performance evaluation of Ballast Water Management System in shipboard test

PureBallast 3.0

AlfaWall AB

Final report

February 2014

The expert in **WATER ENVIRONMENTS**

This report has been prepared under the DHI Business Management System certified by DNV
Quality Management ISO 9001
DNV Business Assurance, Danmark A/S

Approved by
06-02-2014
X
Approved by
Signed by: Jens Tørsløv

Biological efficacy performance evaluation of Ballast Water Management System in shipboard test

PureBallast 3.0

Prepared for	AlfaWall AB
Represented by	Mr Per Borin, Process Manager

M/V TURANDOT

Project manager	Michael Jakob Andersen
Authors	Edina Chua Lin Li
	Camilla Hedberg
Quality control	Torben Madsen
Quality assurance	Louise Schlüter

Project number	11812728
Approval date	2014.02.06
Revision	Final V1.0
Classification	Confidential

DHI • Agern Alle 5 • DK-2970 Hørsholm • Denmark
Telephone: +45 4516 9200 • Telefax: +45 4516 9292 • www.dhigroup.com

CONTENTS

Abbreviations **1**

1 Executive summary and conclusion **2**

2 Introduction **5**

3 Classification society **6**

4 Client **6**

5 Testing laboratory **6**

6 Ballast water management system **7**
6.1 Performance claim and BWMS limitations 7

7 Experimental design **7**
7.1 Trial periods and locations 7

8 Sampling **9**
8.1 Sample overview 9
8.1.1 Samples for DOC, POC and TSS analyses 10
8.1.2 Samples for enumeration of organisms ≥50 µm 10
8.1.3 Samples for enumeration of organisms ≥10 µm and <50 µm 10
8.1.4 Samples for enumeration of organisms <10 µm 10

9 Data management, analyses and reporting **10**
9.1 Data management 10
9.2 Analyses 11
9.2.1 Analysis overview 11
9.2.2 Physical/chemical analyses 11
9.2.3 Organism size class ≥50 µm 12
9.2.4 Organism size class ≥10 µm and <50 µm 12
9.2.5 Organism size class <10 µm (bacteria) 14

10 Results **15**
10.1 Physical-chemical parameters 15
10.2 Biological parameters 16
10.2.1 Organism size class ≥50 µm 17
10.2.2 Organism size class ≥10 and <50 µm 19
10.2.3 Bacteria 20

11 Quality assurance and quality control **22**

12 References **22**

TABLES

Table 1.1 Dates and locations for PureBallast 3.0 shipboard test cycles 3
Table 1.2 Flow rates, UV-T, UV-I and average numbers (three replicates) of viable organisms in treated water at discharge. Viable organisms ≥10 and <50 µm were quantified by the most probable number of proliferating algae and addition of CMFDA/FDA-stained motile organisms without chlorophyll 4
Table 1.3 Average numbers (three replicates) of viable organisms ≥10 and <50 µm in treated water at discharge quantified by microscopic counting after staining with CMFDA and FDA. 5
Table 7.1 Details for inlet and discharge operations for shipboard test cycles 8
Table 8.1 Number of samples and sample volumes 9
Table 9.1 Overview of analyses and sample replicates 11
Table 10.1 Average concentrations (three replicates) of total suspended solids (TSS), particulate organic carbon (POC), dissolved organic carbon (DOC) and mineral matter (MM) 15
Table 10.2 Average measurements of oxygen (O_2), salinity, temperature, pH, UV transmittance (UV-T) and turbidity 16
Table 10.3 Total sample volumes and average numbers (three replicates) of viable organisms in the size class ≥50 µm. Specific data and individual sample volumes are provided in Appendix E. 18
Table 10.4 Average numbers (three replicates) of viable organisms in the size class ≥10 µm and <50 µm. Specific data including storage temperatures during transport are provided in Appendix E. 20
Table 10.5 Average bacterial concentrations. Specific data are provided in Appendix E. 21

APPENDICES

APPENDIX A
QMP and Test Plan (including QAPP) with Deviation No. 1 and Amendments Nos. 1-6

APPENDIX B
Adjustments, service and maintenance log for PureBallast 3.0 during shipboard testing

APPENDIX C
On-board testing documentation

APPENDIX D
Data logging from the biological efficacy testing with PureBallast 3.0

APPENDIX E
Detailed data on biological efficacy analyses and physical-chemical parameters in shipboard testing with PureBallast 3.0

APPENDIX F
Process data from statistical analyses of organisms ≥50 µm

APPENDIX G
Investigation of the unsuccessful shipboard test No. 5

APPENDIX H

Quality control and quality assurance for performance evaluation in shipboard testing with PureBallast 3.0

Abbreviations

Abbreviation	Description
AOT	Advanced oxidation technology
AVG	Average
BE	Biological efficacy
BWMS	Ballast water management system
CFU	Colony-forming units
CMFDA	Chloromethylfluorescein diacetate
DOC	Dissolved organic carbon
DNV GL	Det Norske Veritas and Germanischer Lloyd
DPM	Disintegrations per minute
ETV	US-EPA, Environmental Technology Verification Program
FDA	Fluorescein diacetate
FR	Field replicate
IMO	International Maritime Organization
MEPC	Marine Environment Protection Committee
MM	Mineral material
MPN	Most probable number
M/V	Motor vessel
NTU	Nephelometric turbidity units
POC	Particulate organic carbon
PSU	Practical salinity units
QAPP	Quality assurance project plan
QMP	Quality management plan
SOP	Standard operating procedure
STD	Standard deviation
TSS	Total suspended solids
UV	Ultraviolet
UV-I	UV intensity
UV-T	UV transmittance

1 Executive summary and conclusion

DHI provides independent performance evaluation of ballast water management systems (BWMS) for the type approval process. The purpose of the performance evaluation is to assure that BWMS approved by administrations are capable of meeting the ballast water discharge standard in Regulation D-2 /1/, also known as the IMO D-2 standard, in land-based and shipboard evaluations and do not cause unacceptable harm to the vessel, crew, environment or public health. The United States Coast Guard Standards for Living Organisms in Ships' Ballast Water Discharged in U.S. Waters /2/ (§151.2030) establish a ballast water discharge standard similar to the IMO D-2 standard. According to the U.S. Coast Guard, sampling and analyses for living organisms in shipboard performance evaluation of BWMS is to be conducted as described in the ETV protocol /3/.

The objective of this project was to conduct a shipboard performance evaluation of the AlfaWall BWMS PureBallast 3.0 with the aim to meet the U.S. Coast Guard Standards /2/ and the testing requirements in Resolution MEPC.174(58) /4/, generally referred to as IMO G8 guidelines. From December 2012 through October 2013, DHI conducted a shipboard test of PureBallast 3.0 with DNV GL as classification society.

A total of six biological efficacy (BE) test cycles were conducted on board the M/V TURANDOT. PureBallast 3.0 was operated by the vessel crew during all BE test cycles except in test cycle No. 1, which was not a valid test. DHI staff members were only present on the vessel during biological efficacy test cycles and did not witness scheduled and unscheduled system maintenance performed on PureBallast 3.0 during the shipboard testing period.

In test cycles Nos.1 and 2, ballast and de-ballast operations were conducted while the vessel was en route between Bremerhaven, Germany, and Zeebrugge, Belgium. The ballast and de-ballast operations for test cycle No. 3 were conducted while the vessel was en route between Bremerhaven and Gothenburg, Sweden. In test cycle No. 4, ballast and de-ballast operations were conducted while the vessel was drifting outside Gothenburg. In test cycle No. 5, both ballast and de-ballast operations were conducted while the vessel was docked at the port of Zeebrugge. In test cycle No. 6, ballast operation was conducted at the port of Bremerhaven and de-ballasting was conducted en route to Gothenburg. The holding time varied from approx. 2 to 20 hours for treated water and from 5 to 20 hours for control water. PureBallast 3.0 was tested at salinities ranging from 17 to 36 PSU with water temperatures ranging from approx. 4 to 19°C. Table 1.1 summarizes the dates and locations of the shipboard test cycles.

Table 1.1 Dates and locations for PureBallast 3.0 shipboard test cycles

Test cycle	Location	Operation	Inlet	Discharge
No. 1	En route Bremerhaven – Zeebrugge	Control	2012.12.29 10:04-10:55	2012.12.29 18:22-18:52
		BWMS	2012.12.29 11:56-13:15	2012.12.29 17:18-18:03
No. 2	En route Bremerhaven-Zeebrugge	Control*	2013.03.13 09:28-09:35 10:11-10:25	2013.03.13 18:52-19:08
		BWMS**	2013.03.13 13:58-14:48	2013.03.13 17:44-18:12 18:29-18:34
No. 3	En route Bremerhaven-Gothenburg	Control	2013.04.17 08:48-09:06	2013.04.17 15:49-16:06
		BWMS	2013.04.17 09:42-10:18	2013.04.17 15:01-15:29
No. 4	Outside Gothenburg, drifting	Control	2013.04.18 08:53-09:10	2013.04.18 13:53-14:07
		BWMS	2013.04.18 11:14-11:49	2013.04.18 13:12-13:37
No. 5	Port of Zeebrugge	Control	2013.09.13 02:50-03:13	2013.09.13 10:54-11:17
		BWMS	2013.09.13 03:45-04:43	2013.09.13 09:48-10:31
No. 6	En route Bremerhaven-Gothenburg***	Control	2013.10.15 16:47-17:09	2013.10.16 14:22-14:39
		BWMS	2013.10.15 17:31-18:19	2013.10.16 13:31-14:04

* Ballast operation of control water interrupted between 09:35-10:11 (see test cycle data logging in Appendix D for more information)

** De-ballast operation of treated water interrupted between 18:12-18:29 (see test cycle data logging in Appendix D for more information)

*** Ballast operations were conducted while the vessel was moored behind the locks in Bremerhaven

Samples were processed on board within the shortest possible time period. Samples for the enumeration of viable organisms ≥50 µm were analysed on board and only analyses performed within six hours from the end of sampling were considered for the verification of compliance with the pass criterion. Samples for the enumeration of viable organisms in the ≥10 and <50 µm size class were transported to DHI in Denmark within 72 hours.

During test cycle No. 1 conducted in December 2012, the density of viable organisms in the ≥10 and <50 µm size class was below the requirement for inlet water, and, thus the test cycle was considered invalid. Furthermore, PureBallast 3.0 was not able to achieve a total rated capacity (TRC) of 1,000 m^3/h and the operation of the system was assisted by an AlfaWall representative and, therefore, test cycle No. 1 was considered an unsuccessful test cycle.

With the exception of test cycle No. 1, the densities of viable organisms identified in the inlet and control discharge water were in accordance with the IMO G8 guidelines /4/ and the U.S. Coast Guard requirements in all performed test cycles. The average densities of viable organisms ≥50 µm ranged from approx. 2,100 to 77,100 organisms/m^3 in the inlet water, and from approx. 1,100 to 60,400 organisms/m^3 in the control discharge water. In the valid test cycles Nos. 2-6, the average densities of viable organisms ≥10 and <50 µm in the inlet water varied from 103 to 1,102 organisms/mL when determined by inverted microscopy. In the control discharge water, the average densities of viable organisms

ranged from 51 to 315 organisms/mL when determined by microscopic analyses of chloromethylfluorescein diacetate/fluorescein diacetate (CMFDA/FDA) stained samples.

Table 1.2 summarizes the flow rates, UV transmittance (UV-T), UV intensity (UV-I) and average numbers of viable organisms at discharge in water treated by PureBallast 3.0. The viable organisms in the ≥10 and <50 µm size class were quantified by algal re-growth and addition of motile organisms without chlorophyll. DHI considers this quantification, which is also referred to as the most probable number of proliferating algae and addition of CMFDA/FDA-stained motile organisms without chlorophyll, the best available technique to determine viable organisms in the ≥10 and <50 µm size class after UV treatment. Evaluating treatment performance of organisms ≥10 and <50 µm based solely on microscopy after staining with CMFDA and FDA is unsuitable for UV-based BWMS as these stains react with non-specific esterases and intact stained cells fluoresce under the microscope. UV radiation causes damage to the cell DNA and prevents cell proliferation but the esterase enzyme activity and the cell membrane may stay intact for several days. Table 1.3 summarizes the numbers of viable organisms in the ≥10 and <50 µm size class obtained by microscopic counting after staining with CMFDA and FDA.

Table 1.2 Flow rates, UV-T, UV-I and average numbers (three replicates) of viable organisms in treated water at discharge. Viable organisms ≥10 and <50 µm were quantified by the most probable number of proliferating algae and addition of CMFDA/FDA-stained motile organisms without chlorophyll

Test cycle	Average flow rate during ballast operation		UV-T (%)	UV-I (W/m^2)	Organisms ≥50 µm per m^3	Organisms ≥10 and <50 µm per mL; Algal re-growth + CMFDA/FDA-stained motile organisms	Organisms <10 µm Enterococci (CFU/100 mL)	Organisms <10 µm *E. coli* (CFU/100 mL)	Organisms <10 µm *V. cholerae* (CFU/100 mL)
	Treated (m^3/h)	Control (m^3/h)							
No. 1*	356	440	96	1,815-1,820	1.5	<0.18	<10	<10	Absent
No. 2	889	1,029	96	1,710-1,805	0	0.27	<10	<10	Absent
No. 3	950	1,013	96	1,280-2,100	0	<0.18	<10	<10	Absent
No. 4	950	1,066	90	1,175-1,403	1.9	<0.18	<10	<10	Absent
No. 5**	811	981	85	1,061-1,188	98	0.19	11	10	Absent
No. 6	998	990	60	497-563	7.0	<0.18	<10	<10	Absent

* Invalid and unsuccessful test cycle
** Valid but unsuccessful test cycle with indications of contamination

Table 1.3 Average numbers (three replicates) of viable organisms ≥10 and <50 µm in treated water at discharge quantified by microscopic counting after staining with CMFDA and FDA.

Test cycle	Organisms ≥10 and <50 µm Microscopy after CMFDA/FDA staining (organisms/mL)
No. 1	0.53
No. 2	2.8
No. 3	0.75
No. 4	0.67
No. 5	5.4
No. 6	6.4

The performance evaluation based on algal re-growth and addition of motile organisms without chlorophyll for the organisms ≥10 and <50 µm (Table 1.2) leads to the conclusion that PureBallast 3.0 complied with the ballast water discharge standard in all test cycles with the exception of test cycle No. 5. This evaluation is further supported by CMFDA/FDA microscopic enumeration of organisms ≥10 and <50 µm (Table 1.3). It is noted that test cycle No. 5 was unsuccessful as the average number of viable organisms in the ≥50 µm size range in the treated discharge samples was higher than the threshold value defined in the ballast water discharge standard. Indications of contamination were observed by DHI and are presented in Section 10.2.1. An investigation into the reasons for this unsuccessful test cycle was conducted by AlfaWall and is enclosed in Appendix G.

The trial period for shipboard testing started when the first valid and successful test cycle, test cycle No. 2, was performed during March 2013. The following two test cycles (test cycles Nos. 3 and 4) were also valid and successful. Thus, the treated ballast water at discharge was in compliance with Regulation D-2 /1/ for three consecutive and valid test cycles (test cycles Nos. 2, 3 and 4). Test cycle No. 6 conducted in October 2013, seven months after the start of the shipboard trial period, was valid and successful. Thus, the requirement of at least six months operation period of the BWMS for conduction of test cycles for biological efficacy performance evaluation was fulfilled.

The result of the six test cycles conducted from December 2012 through October 2013 concludes that PureBallast 3.0 does not comply with the U.S. Coast Guard Standards /2/ that prescribe confirmed efficacy of the BWMS according to the ballast water discharge standard during at least five consecutive valid test cycles.

Based on shipboard test cycles Nos. 2 through 6, it can be concluded that efficacy of PureBallast 3.0 was in accordance with the requirements in the IMO G8 guidelines /4/:

- Three consecutive, valid test cycles were performed and confirmed successful (test cycles Nos. 2, 3 and 4)
- The performed test cycles, including the unsuccessful test cycle No. 5, spanned a period of more than six months.

2 Introduction

DHI is an independent, international consulting and research organisation established in Denmark and today represented in all regions of the world with a total of more than 1,000 employees. Our objectives are to advance technological development, governance and competence in the fields of water, environment and health. DHI works with governmental agencies and authorities, contractors, consultants and numerous industries.

DHI provides independent performance evaluation of ballast water management systems (BWMS) for the approval process. DHI has no involvement, intellectual or financial, in the mechanics, design or marketing of the products and technologies that are being evaluated. To ensure that DHI's tests are uncompromised by any real or perceived individual or team bias relative to test outcomes, DHI's test activities are subject to rigorous quality assurance (QA), quality control (QC) and documentation. DHI's quality management system is certified according to ISO 9001 by DNV GL. The certification is facilitated by the implementation of the DHI Business Management System.

The objective of this project was to conduct a shipboard performance evaluation of PureBallast 3.0 with the aim to meet the U.S. Coast Guard Standards /2/ and the testing requirements in Resolution MEPC.174(58) /4/, generally referred to as IMO G8 guidelines. According to the U.S. Coast Guard, sampling and analyses for living organisms in shipboard performance evaluation of BWMS shall be conducted as described in the ETV protocol /3/. DHI had not achieved recognition as an accepted sub-laboratory under the Independent Laboratory headed by DNV GL when the performance evaluation of the present shipboard test was initiated (December 2012), and DHI shall not be responsible if this fact is taken into account in the evaluation by the U.S. Coast Guard.

3 Classification society

The classification society appointed by the manufacturer for inspection and certification of the project is:

Det Norske Veritas and Germanischer Lloyd (DNV GL)
Veritasveien 1
NO-1363 Høvik
Norway

4 Client

The client requesting the performance evaluation is:

AlfaWall AB
Hans Stahles Väg 7
SE-147 80 Tumba
Sweden

The client is the manufacturer of the PureBallast 3.0 BWMS.

5 Testing laboratory

DHI Denmark was recognized as a sub-laboratory to the Independent Laboratory headed by DNV GL by Letter of Acceptance from U.S. Coast Guard dated 11 June 2013. DHI's Environmental Laboratory has an accreditation according to ISO 17025, which includes ecotoxicological studies and analyses related to performance evaluation of BWMS. Furthermore, the laboratory is authorized to carry out ecotoxicological studies in compliance with the OECD Principles of Good Laboratory Practice (GLP).

DHI's Environmental Laboratory and staff normally analyse all samples collected during the performance evaluation of BWMS. If required, specialized chemical analyses of, e.g., active substances or disinfection by-products, are conducted by a subcontractor.

The shipboard test was carried out by:

DHI
Agern Allé 5
DK-2970 Hørsholm
Denmark

6 Ballast water management system

The BWMS examined in this performance evaluation is the AlfaWall BWMS PureBallast 3.0. The basic treatment principles of PureBallast 3.0 are mechanical filtration and advanced oxidation technology (AOT) by ultra violet (UV) radiation. Mechanical filtration was only applied during ballast operations whereas disinfection in the AOT reactor was applied during both ballast and de-ballast operations. The total rated capacity of the PureBallast 3.0 used for the shipboard test was 1,000 m^3/h. A description of PureBallast 3.0 for shipboard testing is enclosed in Appendix C of the Test Plan (this report Appendix A).

6.1 Performance claim and BWMS limitations

Before shipboard testing was initiated, AlfaWall described a technology performance claim including limitations for treatment performance of PureBallast 3.0, which was included in Section 4.1 of the Test Plan (Appendix A).

7 Experimental design

7.1 Trial periods and locations

The shipboard test was conducted on board the PCTC (Pure Car Truck Carrier) M/V TURANDOT (IMO 9070450), registered in Singapore. M/V TURANDOT was built in 1995 to the highest class of Lloyd's Register of Shipping and is owned by Wallenius Lines AB. The vessel has a deadweight at maximum draft of 22,815 metric tons and a gross tonnage (GT) of 55,598 GT /5/. During the shipboard testing period, the M/V TURANDOT was in regular route /6/. PureBallast 3.0 was installed on the lower deck of the machine room in the immediate vicinity of the ballast pumps. Additional remote control panels were installed in the machine control room and in the ship's office. During shipboard testing, the ballast tank set 4 (centre, port and starboard) was used for treated water and the ballast tank pair 5 (port and starboard) was used for control water.

Table 7.1 Details for inlet and discharge operations for shipboard test cycles

Test cycle	Location	Operation	Inlet			Discharge		
			Date & time	UVI (W/m^2)	Volume & flow rate	Date & time	UVI (W/m^2)	Volume & flow rate
No. 1	En route Bremerhaven-Zeebrugge	Control	2012.12.29 10:04-10:55	-	370 m^3 440 m^3/h	2012.12.29 18:22-18:52	-	240 m^3 480 m^3/h
		BWMS	2012.12.29 11:56-13:15	1,815-1,820	469 m^3 356 m^3/h	2012.12.29 17:18-18:03	1,634-1,985	372 m^3 496 m^3/h
No. 2	En route Bremerhaven-Zeebrugge	Control*	2013.03.13 09:28-09:35/ 10:11-10:25	-	360 m^3 1,029 m^3/h	2013.03.13 18:52-19:08	-	204 m^3 765 m^3/h
		BWMS**	2013.03.13 13:58-14:48	1,710-1,805	741 m^3 889 m^3/h	2013.03.13 17:44-18:12 18:29-18:34	1,740-1,770	470 m^3 855 m^3/h
No. 3	En route Bremerhaven-Gothenburg	Control	2013.04.17 08:48-09:06	-	304 m^3 1,013 m^3/h	2013.04.17 15:49-16:06	-	205 m^3 724 m^3/h
		BWMS	2013.04.17 09:42-10:18	1,280-2,100	570 m^3 950 m^3/h	2013.04.17 15:01-15:29	1,218-2,030	405 m^3 868 m^3/h
No. 4	Outside Gothenburg, drifting	Control	2013.04.18 08:53-09:10	-	302 m^3 1,066 m^3/h	2013.04.18 13:53-14:07	-	178 m^3 763 m^3/h
		BWMS	2013.04.18 11:14-11:49	1,175-1,403	554 m^3 950 m^3/h	2013.04.18 13:12-13:37	1,286-1,890	383 m^3 919 m^3/h
No. 5	Port of Zeebrugge	Control	2013.09.13 02:50-03:13	-	376 m^3 981 m^3/h	2013.09.13 10:54-11:17	-	293 m^3 764 m^3/h
		BWMS	2013.09.13 03:45-04:43	1,061-1,188	784 m^3 811 m^3/h	2013.09.13 09:48-10:31	1,062 - 1,227	505 m^3 705 m^3/h
No. 6	En route Bremerhaven-Gothenburg***	Control	2013.10.15 16:47-17:09	-	363 m^3 990 m^3/h	2013.10.16 14:22-14:39	-	214 m^3 755 m^3/h
		BWMS	2013.10.15 17:31-18:19	497-563	798 m^3 998 m^3/h	2013.10.16 13:31-14:04	673 - 729	455 m^3 827 m^3/h

* Ballast operation of control water interrupted between 09:35-10:11 (see test cycle data logging in Appendix D for more information)

** De-ballast operation of treated water interrupted between 18:12-18:29 (see test cycle data logging in Appendix D for more information)

*** Ballast operations were conducted while the vessel was moored behind the locks in Bremerhaven

In test cycles Nos. 1 and 2, ballast and de-ballast operations were conducted while the vessel was en route between Bremerhaven, Germany, and Zeebrugge, Belgium. The ballast and de-ballast operations for test cycle No. 3 were conducted while the vessel was en route between Bremerhaven and Gothenburg, Sweden. In test cycle No. 4, ballast and de-ballast operations were conducted while the vessel was drifting outside Gothenburg. In test cycle No. 5, both ballast and de-ballast operations were conducted while the vessel was docked at the port of Zeebrugge. In test cycle No. 6, ballast operation was conducted at the port of Bremerhaven and deballast was conducted en route to Gothenburg. The holding time varied from approx. 2 to 20 hours for treated water and from 5 to 20 hours for control water. In test cycle No. 1, the PureBallast 3.0 installation with a total rated capacity (TRC) of 1,000 m^3/h achieved flow rates of <500 m^3/h and the operation of the system was assisted by an AlfaWall representative. In test cycles Nos. 2-6, the BWMS was operated by a crew member on the vessel.

8 Sampling

8.1 Sample overview

All samples were collected by DHI staff in accordance with the description in the Test Plan. Each test cycle consisted of sampling and analyses of:

- **Inlet water:** During test cycles Nos. 1-4, the vessel was sailing while ballast operations were conducted, thus two separate sets of inlet samples and analyses were used for the control tank and treatment tank. During test cycle No. 5, although the vessel was moored at the port of Zeebrugge, the same procedure was followed. As the results of test cycle No. 5 supported the statement in the Test Plan that only one set of inlet samples were required to be taken, only one set of inlet samples and analyses was used to represent the control tank and the treatment tank during test cycle No. 6.
- **Discharge control water:** Stored without treatment from the time of ballasting to discharge
- **Discharge treated water:** Treated and stored from the time of ballasting to discharge

Table 8.1 Number of samples and sample volumes

Test cycle step	Number of samples	Type of sample	Sample volume per replicate
Inlet water	3 replicates	Organisms ≥50 µm	>1 m^3 *
		Organisms 10-50 µm	>1 L **
		Bacteria	>0.5 L ***
		DOC, POC, UV-T	Approx. 0.5 L ***
		TSS	0.5-2 L ***
Control discharge water	3 replicates	Organisms ≥50 µm	>1 m^3 *
		Organisms 10-50 µm	>1 L **
		Bacteria	>0.5 L ***
		DOC, POC	Approx. 0.5 L ***
		TSS	0.5-2 L ***
Treated discharge water	3 replicates	Organisms ≥50 µm	>3 m^3 *
	3 replicates	Organisms 10-50 µm	>3 L **
	3 × 3 replicates	Bacteria	>0.5 L ***
	3 replicates	DOC, POC	Approx. 0.5 L ***
	3 replicates	TSS	0.5-2 L ***

* Collected by continuous flow during the entire period of intake or discharge; for treated discharge, this time integrated continuous sampling of 3 replicates, each of a volume of >3 m^3, provides the same statistical basis for evaluation as the sampling 3 × 3 replicates of >1 m^3, which is recommended in the G8 guidelines

** Collected by continuous flow during the entire period of discharge; for treated discharge, this time integrated continuous sampling of 3 replicates, each of a volume of >3 L, provides the same statistical basis for evaluation as the sampling 3 × 3 replicates of >1 L, which is recommended in the G8 guidelines

*** Grab samples collected over the period of intake or discharge (e.g. start, middle and end)

DOC Dissolved organic carbon

POC Particulate organic carbon

TSS Total suspended solids

8.1.1 Samples for DOC, POC and TSS analyses

Samples (3 replicates for the inlet water, 3 replicates for the control discharge water, and 3 replicates for the treated discharge water) of at least 0.5 L were collected in heat-sterilized blue cap bottles for analysis of DOC and POC. For TSS analysis, samples with a volume of 0.5-2 L were collected in polyethylene containers.

8.1.2 Samples for enumeration of organisms ≥50 µm

Three replicates were collected by parallel continuous sampling during the entire periods of intake and discharge. The samples were gently filtered through a net with a mesh size of 35 µm and a reservoir (cod-end) at the bottom of the net for collecting the zooplankton. Each replicate was concentrated in 1-L glass bottles. The total volume of the filtered sample was determined by a flow meter.

8.1.3 Samples for enumeration of organisms ≥10 µm and <50 µm

Grab samples were collected for the inlet water and for the control discharge water (3 replicates each) with each a volume of at least 1 L. Treated discharge water was collected by continuous flow during the entire period of discharge with each a volume of at least 3 L. The samples were collected in appropriate containers.

8.1.4 Samples for enumeration of organisms <10 µm

Grab samples (3 replicates for the inlet water, 3 replicates for the control discharge water and 3 × 3 replicates for the treated discharge water) with a volume of at least 0.5 L were collected in appropriate sterile containers with sodium thiosulphate.

9 Data management, analyses and reporting

9.1 Data management

The recording and storage of data are described in the Quality Assurance Project Plan (QAPP; Appendix A).

DHI collected the information relevant for the BE test cycles when DHI staff was present during BE testing (volumes, operation times, flow rates, locations etc.). DHI was only present during BE test cycles and thus did not monitor or document continuous activities regarding the PureBallast 3.0 installation on board the vessel (e.g. scheduled/ unscheduled maintenance of the PureBallast 3.0, weather conditions and resultant effects, consumption of solutions, preparations or consumables, instrument calibration etc.). This limitation for witnessing activities related to the BWMS installation on the vessel was also stated in the Test Plan (Appendix A). AlfaWall's log on description of adjustments, service and maintenance actions related to the BWMS during the shipboard testing period is enclosed in Appendix B. On-board testing documentation describing ballast operations and system performance during the shipboard testing period was compiled by AlfaWall and is enclosed in Appendix C.

9.2 Analyses

The storage temperatures of samples from collection to transport to the laboratory ranged from 5 to 15°C for all the test cycles. Analyses performed on-board were performed within the shortest possible time period. Samples analysed in the laboratory were transported from the vessel within 72 hours. Detailed data on storage temperatures for different sample types are available in Appendix E.

9.2.1 Analysis overview

Table 9.1 Overview of analyses and sample replicates

Samples and replicates	Organisms ≥ 50 µm	Organisms ≥10-<50 µm, microscopy	Organisms ≥10-<50 µm, algal re-growth	Organisms <10 µm	Temperature, salinity, turbidity	UV transmittance	DOC + POC	TSS
Inlet water								
Rep 1 (start)	3 continuous replicates	1	1	1	1	1	1	1
Rep 2 (mid)		2	2	2	2	2	2	2
Rep 3 (end)		3	3	3	3	3	3	3
Control discharge water								
Rep 1 (start)	3 continuous replicates	1	1	1	1	-	1	1
Rep 2 (mid)		2	2	2	2	-	2	2
Rep 3 (end)		3	3	3	3	-	3	3
Treated discharge water								
Rep 1-3 (start)	3 continuous replicates	1	1	1-3	1	1	1	1
Rep 4-6 (mid)		2	2	4-6	4	2	4	4
Rep 7-9 (end)		3	3	7-9	7	3	7	7

DOC Dissolved organic carbon
POC Particulate organic carbon
TSS Total suspended solids

All analyses were carried out in accordance with the Test Plan, Deviation No. 1 and Amendments No. 1-6 (Appendix A) and the relevant standard operating procedures (DHI SOPs). The samples for all analyses were kept cool from the time of collection. During the transport of samples to the laboratory, a temperature logger was placed with the samples to measure the variation in temperature during transport. Samples were processed and analysed within the shortest possible time period.

9.2.2 Physical/chemical analyses

The physical/chemical analyses conducted during the shipboard test included:

- Temperature
- Salinity
- Turbidity
- UV transmittance (UV-T)
- Dissolved organic carbon (DOC)

- Particulate organic carbon (POC)
- Total suspended solids (TSS)

Work on location

Temperature, salinity and turbidity were measured by use of a portable instrument equipped with electrodes. Measurements were conducted at regular intervals throughout the inlet and discharge operations.

For determination of DOC and POC, the samples were treated as described in DHI SOP 30/1769. For determination of TSS, the samples were filtered through a glass fibre filter, which had already been weighed in the laboratory as described in DHI SOP 30/1768. For determination of UV-T, a subsample at a volume of 100-200 mL for each replicate was transferred to glass bottles and kept in the dark until arrival at the DHI Environmental Laboratory.

Work in laboratory

Determination of DOC and POC was performed according to DHI SOP 30/1769. Determination of TSS was performed according to DHI SOP 30/1768. Determination of UV-T was performed according to DHI SOP 30/1770.

9.2.3 Organism size class ≥50 µm

Compliance with the pass criterion (Appendix A, QAPP, Chapter 10) was verified by use of the direct count of organisms ≥50 µm in minimum dimension.

The concentrations of live organisms ≥50 µm in minimum dimension were determined by use of a stereo microscope and a counting chamber according to DHI SOP 30/1700. Live organisms were enumerated by use of standard movement and response to stimuli technique. The live organisms were characterized according to major taxonomic groups. The analyses were completed on location. For treated discharge samples, only analyses performed within six hours from the end of sampling were included in the verification of compliance with the pass criterion. A description of the statistical analysis used to confirm the statistical significance and confidence in the treated discharge analyses is provided in Appendix E, Table E.2.2. Process data from the statistical analyses are available in Appendix F.

9.2.4 Organism size class ≥10 µm and <50 µm

Compliance with the pass criterion (Appendix A, QAPP, Chapter 10) was verified by use of the total of viable organisms determined by measuring algal re-growth in a most probable number (MPN) assay and enumeration of viable organisms ≥10 µm and <50 µm in minimum dimension that are not encompassed by the algal re-growth assay (i.e. CMFDA/FDA-labelled organisms without chlorophyll).

Work on location

Samples preserved with Lugol's solution. Inlet and discharge water samples were preserved with Lugol's solution to enable determination of the concentrations of organisms in the size class ≥10 and <50 µm. The container with inlet or discharge water sample was shaken gently (upside down 5 times) and subsamples with an approx. volume of 100 mL were transferred to brown glass bottles. Two subsamples were collected for one replicate and one subsample was collected for the remaining two replicates. Lugol's solution was added to achieve a final concentration of 2% according to DHI SOP 30/1701.

Samples for CMFDA/FDA analysis. The container with the total sample was shaken gently (upside down 5 times). Subsamples of approx. 200 mL were transferred to brown glass bottles. Two subsamples were collected for one replicate and one subsample was collected for the remaining two replicates. These subsamples were stored in the dark and transported to the DHI Environmental Laboratory for further analysis.

Algal re-growth assay. In the inlet and discharge water samples, the concentrations of viable algae were analysed by measuring algal re-growth in a most probable number (MPN) assay. The container with the total sample was shaken gently (upside down 5 times). One subsample (approx. 10 mL) of undiluted water per replicate was kept in the dark as 'back-up samples'. Dilution series of the inlet water, control discharge water and treated discharge water were prepared by adding 1-mL aliquots of sample to test tubes with 5 mL of liquid medium as described in DHI SOP 30/1704. Ten (10) control test tubes containing only 5 mL of medium were prepared. The test tubes were kept in the dark at ambient temperature until arrival at the DHI Environmental Laboratory.

Work in laboratory

Samples preserved with Lugol's solution. These samples were analysed as follows:

- Inlet water. Assuming that practically all of the organisms in the natural water were alive, fulfilment of the validity criterion for the concentration of organisms ≥10 and <50 µm in the inlet water was confirmed by inverted microscopy enumeration according to DHI SOP 30/1701. The analyses comprised detailed examination of the algal chloroplasts (to confirm that the phytoplankton was alive at the time of sampling) and classification of the algae according to groups, taxa or species.

- Treated discharge water. Inverted microscopy was applied to quantify the predominant groups, taxa and species ≥10 and <50 µm in the treated discharge water with the purpose of adding to the documentation of the algal re-growth assay (see below).

CMFDA/FDA. Chloromethylflourescein diacetate (CMFDA) and fluorescein diacetate (FDA) were added to a subsample and, after incubation, the subsample was examined by use of a microscope under epifluorescence. Organisms labelled by either CMFDA or FDA were considered viable as described in DHI SOP 30/1701. These enumerations of CMFDA/FDA-stained organisms were applied to confirm that the validity criterion for the concentration of organisms ≥10 and <50 µm in the control discharge water was fulfilled. For treated discharge water, only CMFDA/FDA-labelled moving organisms without chlorophyll were included in the verification of treatment efficacy.

Algal re-growth assay. On arrival at the laboratory, the fluorescence of the test tubes was determined before incubation (t_0). The test tubes were incubated for 14 days at ambient temperature of the sampling location as described in DHI SOP 30/1704. The concentrations of viable algae in the inlet water, control discharge water and treated discharge water were determined by measuring the fluorescence in the test tubes according to DHI SOP 30/1704.

The algal re-growth assay was documented by the growth of the naturally occurring algae under the conditions applied in the assay. Identification of groups, taxa or species in the local water capable of growth under the applied conditions was performed with undiluted inlet water and after serial dilution. In addition, the algal groups, taxa or species in the inlet water were thoroughly analysed and compared with the list of algae capable of growing under the conditions in the algal re-growth assay, which has been obtained during land-based and shipboard test cycles in Hundested, Denmark (some of the groups, taxa or species may be the same across geographic regions). DHI is confident that the algal re-growth assay is conducted under conditions that support the growth of a versatile range of algal species. However, the limited number of test cycles (1 or 2) conducted during a shipboard test voyage implies that the list of algae identified in the

inlet water and in the algal re-growth assay is less comprehensive compared with the list obtained from the large number of test cycles in Hundested.

The algal groups, taxa and species in the Lugol's solution-preserved treated discharge water samples were compared with the identified algae capable of growing under the conditions in the algal re-growth assay. This comparison enabled the confirmation or rejection of whether the predominant groups, taxa or species in the treated discharge water were able to grow under the conditions in the assay (confirmation will mean that the results obtained in the assay may be regarded as a valid quantification of the viable algae in the treated discharge water).

9.2.5 Organism size class <10 µm (bacteria)

Compliance with the pass criterion (Appendix A, QAPP, Chapter 10) was verified by use of the colony forming units (CFU) enumerated on solid media. The methods for counting of bacteria are described in the QAPP.

Work on location

E. coli and enterococci were determined according to DHI SOP 30/1708.

For detection of *Vibrio cholerae*, one sample per replicate was filtered through a 0.45-µm filter, after which the filter was kept moist in sterile polyethylene tubes.

Work in laboratory

The possible occurrence of *Vibrio cholerae* was analysed according to DHI SOP 30/1707.

10 Results

10.1 Physical-chemical parameters

For the PureBallast 3.0, the physical-chemical conditions of inlet and discharge waters for all test cycles are summarized in Table 10.1 and Table 10.2. Onsite measurement data are also available in the data logging in Appendix D. Detailed data on TSS, POC, DOC and MM, including temperatures during transport of samples, are available in Appendix E.

Table 10.1 Average concentrations (three replicates) of total suspended solids (TSS), particulate organic carbon (POC), dissolved organic carbon (DOC) and mineral matter (MM)

Test cycle	Water type	TSS (mg/L)	POC (mg/L)	DOC (mg/L)	MM (mg/L)*
No. 1	Inlet control	15	0.53	0.12	14
	Inlet BWMS	9.5	0.51	0.11	9.0
	Control discharge	9.1	0.43	0.46	8.7
	Treated discharge	9.6	0.35	0.31	9.2
No. 2	Inlet control	46	0.36	0.87	45
	Inlet BWMS	42	<0.1	1.4	42
	Control discharge	45	<0.1	1.7	45
	Treated discharge	43	<0.1	1.5	42
No. 3	Inlet control	16	0.21	1.6	15
	Inlet BWMS	3.8	0.53	0.84	3.3
	Control discharge	4.9	<0.1	1.2	4.8
	Treated discharge	6.5	0.31	1.2	6.2
No. 4	Inlet control	4.0	0.18	2.1	3.8
	Inlet BWMS	3.7	0.12	2.2	3.6
	Control discharge	2.9	<0.1	2.2	2.8
	Treated discharge	4.1	<0.1	2.4	4.0
No. 5	Inlet control	8.5	0.24	3.8	8.3
	Inlet BWMS	5.7	0.12	3.3	5.6
	Control discharge	5.9	0.24	3.8	5.6
	Treated discharge	7.1	0.12	3.1	7.0
No. 6	Inlet	36	0.53	5.0	36
	Control discharge	18	0.15	3.2	18
	Treated discharge	21	0.23	3.2	21

* MM determined as the difference between TSS and POC as described in Section 5.4.6.1 of the ETV protocol /3/

Table 10.2 Average measurements of oxygen (O_2), salinity, temperature, pH, UV transmittance (UV-T) and turbidity

Test cycle	Water type	O_2 (mg/L)	Salinity (PSU)	Temp. (°C)	pH	UV-T (%)	Turbidity (NTU)
No. 1	Inlet control	9.5	36	8.9	8.0	97	3.3
	Inlet BWMS	9.3	36	9.2	8.0	96	3.0
	Control discharge	8.9	35	8.9	8.0	-	3.0
	Treated discharge	8.9	35	9.2	8.0	96	4.0
No. 2	Inlet control	11	34	3.8	7.8	94	5.7
	Inlet BWMS	11	35	4.8	8.0	96	2.3
	Control discharge	10	34	4.5	7.8	-	4.0
	Treated discharge	11	35	5.0	8.0	96	2.3
No. 3	Inlet control	12	36	6.2	8.0	96 (99)	2.7
	Inlet BWMS	12	36	6.2	8.1	96 (98)	2.3
	Control discharge	11	35	6.3	8.0	-	3.0
	Treated discharge	11	36	6.3	8.0	95 (97)	3.3
No. 4	Inlet control	12	21	4.7	7.9	90 (89)	1.0
	Inlet BWMS	11	22	4.8	8.0	90 (91)	1.0
	Control discharge	12	23	4.9	8.0	-	3.3
	Treated discharge	11	23	5.0	8.0	91(92)	2.3
No. 5	Inlet control	5.0	28	19	7.2	85 (88)	6.3
	Inlet BWMS	4.8	28	19	7.6	85 (88)	5.7
	Control discharge	5.1	28	19	8.0	-	4.0
	Treated discharge	5.1	28	19	7.9	86 (89)	4.3
No. 6	Inlet control	6.9	17	13	7.3	59 (81)	23
	Inlet BWMS	6.8	17	13	7.2	60 (82)	21
	Control discharge	6.7	18	14	7.6	-	13
	Treated discharge	7.1	18	14	7.1	66 (84)	15

PSU Practical salinity units
NTU Nephelometric turbidity units
UV-T UV transmittance (figures in parentheses represent UV-T measured in 0.2-µm filtered samples)

10.2 Biological parameters

The densities of live organisms in the inlet and control discharge water in test cycles Nos. 2, 3, 4, 5 and 6 were in accordance with the IMO G8 guidelines and the ETV protocol and, thus, these test cycles were considered valid. The density of viable organisms in the ≥10 and <50 µm size class recorded in test cycle No. 1 was lower than the requirement for inlet water and, thus, test cycle No. 1 was invalid. Detailed data from the biological efficacy analyses are available in Appendix E.

The densities of viable organisms in the treated discharge water were below the ballast water discharge standard /1/, /2/ for all valid test cycles with the exception of test cycle No. 5, in which the density of organisms ≥50 µm exceeded the value defined for a successful test cycle.

10.2.1 Organism size class ≥50 µm

The densities of viable organisms from the ≥50 µm size class in the inlet and control discharge water were in accordance with the IMO G8 guidelines and the ETV protocol in all test cycles. The average densities varied from 2,100 to 77,052 organisms/m^3 in the inlet water and from 1,125 to 60,372 organisms/m^3 in the control discharge water.

In the treated discharge water, the average concentrations of viable organisms in the ≥50 µm size range are summarized in Table 10.3. Only analyses performed within six hours from the end of sampling were considered for the verification of compliance with the pass criterion. A description of the statistical analysis used to confirm the statistical significance and confidence in the treated discharge analyses is provided in Appendix E, Table E.2.2. The average concentration of viable organisms in the treated discharge samples was calculated by dividing the total count of organisms in all three replicates with the aggregated sample volume analysed (within six hours from the end of sampling). This pooling of data is consistent with the approach in the ETV protocol. The process data from the statistical analyses are presented in Appendix F. The average concentrations of viable organisms in ≥50 µm in the treated discharge water were 1.5; 0; 0; 1.9; and 7.0 organisms/m^3 for test cycles Nos. 1-4 and test cycle No. 6, respectively, which were all below the pass criterion defined in the ballast water discharge standard. In test cycle No. 5, 98 organisms/m^3 was recorded in the treated discharge water, which exceeds the ballast water discharge standard and, thus, test cycle No. 5 was unsuccessful. However, the following observations indicate that the ballast tanks were not clean at the start of the ballast operation:

1. The control discharge samples had average *E. coli* concentrations of 290 CFU/100 mL and average enterococci concentrations of 250 CFU/100 mL, both of which were several times higher than the control inlet samples collected only eight hours before and much higher compared with control discharge samples in the other test cycles.

2. 85% of the organisms observed in the analysed treated discharge samples were found to be Harpacticoida copepods (based on an average from three replicates). This type of organisms was not observed in the inlet samples. The observed Harpacticoida were found to be of the approximate dimensions of either 70 × 500 µm; 150 × 550 µm or 80 × 300 µm.

3. DHI staff carrying out the shipboard sampling and analyses on board noted that the treated discharge contained large particles (visible to the naked eye) that were not observed during ballasting. The TSS concentration in the treated discharge (7.1 mg/L) was also higher than the inlet TSS concentration (5.7 mg/L).

These indications of contamination of the ballast tanks during test cycle No. 5 were noted by DHI and were possibly the reason for the high number of viable organisms ≥50 µm, resulting in an unsuccessful test. An investigation conducted by AlfaWall into the reasons for the unsuccessful test cycle is included in Appendix G.

Table 10.3 Total sample volumes and average numbers (three replicates) of viable organisms in the size class ≥50 µm. Specific data and individual sample volumes are provided in Appendix E.

Test cycle	Water type	Total sample volume (m^3)	Organisms/m^3	Actual sample volume analysed within 6 hours (m^3)
No. 1	Inlet control	4.8	4,742	-
	Inlet BWMS	3.9	6,429	-
	Control discharge	3.1	4,454	-
	Treated discharge*	10	1.5	2.6
No. 2	Inlet control	3.4	8,621	-
	Inlet BWMS	3.4	8,490	-
	Control discharge	3.3	9,897	-
	Treated discharge*	9.2	0	3.2
No. 3	Inlet control	3.4	4,243	-
	Inlet BWMS	3.7	2,100	-
	Control discharge	3.2	1,125	-
	Treated discharge*	9.1	0	1.6
No. 4	Inlet control	3.2	24,608	-
	Inlet BWMS	3.4	23,603	-
	Control discharge	3.2	24,357	-
	Treated discharge*	9.1	1.9	1.6
No. 5	Inlet control	3.5	77,052	-
	Inlet BWMS	4.7	61,092	-
	Control discharge	3.6	60,372	-
	Treated discharge*	9.4	98	1.8
No. 6	Inlet	3.3	10,665	-
	Control discharge	3.8	7,537	-
	Treated discharge	9.2	7.0	6.0
Require-ments	Inlet**	≥3	≥100	-
	Control discharge**	≥3	≥10	-
	Treated discharge**	≥9	<10	-

* Only analyses performed within six hours from the end of sampling were included in the verification of compliance with the pass criterion. The average concentration of viable organisms in the treated discharge samples was calculated by dividing the total count of organisms in all three replicates with the aggregated sample volume analysed (within six hours from the end of sampling). This pooling of data is consistent with the approach in the ETV protocol. A description of the statistical analysis used to confirm the statistical significance and confidence in the treated discharge analyses is provided in Appendix E and Appendix F.

** Minimum criteria for live organism densities according to the IMO G8 guidelines /4/ and the ETV protocol /3/

10.2.2 Organism size class ≥10 and <50 µm

As stated in the Test Plan (Appendix A), fulfilment of the validity criterion for the concentration of organisms ≥10 and <50 µm in the inlet water was based on inverted microscopy enumeration according to DHI SOP 30/1701.

The densities of viable organisms from the ≥10 and <50 µm size class in the inlet water were in accordance with the requirement in the IMO G8 guidelines and the ETV protocol in all test cycles except in test cycle No. 1. In test cycles Nos. 2-6, the average densities of viable organisms ≥10 and <50 µm in the inlet water varied from 103 to 1,102 organisms/mL when determined by inverted microscopy. In the two sets of inlet water samples from test cycle No. 1 (inlet to ballast tanks for holding control water and treated water), the average numbers of viable organisms in the ≥10 and <50 µm size class were determined to be 50 and 70 organisms/mL, respectively. These numbers were below the required densities for a valid test cycle. The densities of viable organisms from the ≥10 and <50 µm size class in the control discharge water were in accordance with the IMO G8 guidelines and the ETV protocol in all test cycles. In the control discharge water for the valid test cycles, the average densities of viable organisms ranged from 51 to 315 organisms/mL when determined by microscopic analyses of CMFDA/FDA-stained samples.

The average densities of organisms in the inlet water when determined by the algal re-growth assay ranged from approx. 137 to >160 organisms/mL for test cycles Nos. 1, 2, 3, 5 and 6. Lower numbers of 34 and 10 organisms/mL were obtained in the inlet samples for test cycle No. 4. The low numbers obtained by the re-growth assay in these samples were unforeseen as the species identification indicated that the majority of the algal taxa and species in the inlet water were capable of growing under the conditions applied in the assay. Furthermore, the average microscopy and re-growth results corresponded well for the control discharge samples.

The algal taxa and species capable of growing under the conditions applied in the algal re-growth assay represented 71-100% of the identified algae in the inlet water (Appendix E).

Table 10.4 summarizes the concentrations of viable organisms ≥10 and <50 µm based on two different evaluation methodologies. The quantitative evaluation of the performance at discharge after the second treatment was based on (i) microscopic counting after staining with CMFDA and FDA and (ii) most probable number of proliferating algae and addition of CMFDA/FDA-stained motile organisms without chlorophyll.

Microscopic counting after staining with CMFDA and FDA

The numbers of CMFDA/FDA-stained organisms ≥10 and <50 µm at discharge were 0.53; 2.8; 0.75; 0.67; 5.4 and 6.4 organisms/mL in test cycles Nos. 1 to 6, respectively (treated discharge samples in Table 10.4).

Most probable number of proliferating algae and addition of CMFDA/FDA-stained motile organisms without chlorophyll

The total numbers of the MPN obtained in the algal re-growth assay and the CMFDA/FDA-stained motile organisms without chlorophyll at discharge were <0.18; 0.27; <0.18; <0.18; 0.19 and <0.18 organisms/mL in test cycles Nos. 1 to 6, respectively (treated discharge samples in Table 10.4).

Table 10.4 Average numbers (three replicates) of viable organisms in the size class ≥10 µm and <50 µm. Specific data including storage temperatures during transport are provided in Appendix E.

Test cycle	Water type	Microscopy (organisms/mL)		Algal re-growth + CMFDA/FDA stained-motile organisms without chlorophyll (organisms/mL)
		Total number	Motile without chlorophyll*	
No. 1	Inlet control	50	-	137
	Inlet BWMS	70	-	137
	Control discharge	16	4.2	119
	Treated discharge	0.53	0	<0.18
No. 2	Inlet control	234	-	>160
	Inlet BWMS	1,102	-	>160
	Control discharge	308	20	>180
	Treated discharge	2.8	0	0.27
No. 3	Inlet control	663	-	>160
	Inlet BWMS	787	-	>160
	Control discharge	315	8.2	145
	Treated discharge	0.75	0	<0.18
No. 4	Inlet control	135	-	34
	Inlet BWMS	103	-	10
	Control discharge	73	7.3	67
	Treated discharge	0.67	0	<0.18
No. 5	Inlet control	240	-	>160
	Inlet BWMS	180	-	>160
	Control discharge	256	21	>181
	Treated discharge	5.4	0	0.19
No. 6	Inlet	175	-	>160
	Control discharge	51	7.0	>167
	Treated discharge	6.4	0	<0.18
Require-ments	Inlet**	≥100	-	-
	Control discharge**	≥10	-	-
	Treated discharge	-	-	<10

* The concentrations of motile organisms without chlorophyll are included in the total number of organisms

** Minimum criteria for live organism densities according to the IMO G8 guidelines /4/ and the ETV protocol /3/

10.2.3 Bacteria

For shipboard testing, there are no requirements in relation to the density of bacteria in the inlet water or the control discharge water. The contents of *E. coli* and enterococci in the inlet water and control discharge water were generally low compared with the threshold values except in test cycle No. 5, in which the control discharge samples had average *E. coli* concentrations of 290 CFU/100 mL and average enterococci concentrations of 250 CFU/100 mL.

Table 10.5 Average bacterial concentrations. Specific data are provided in Appendix E.

Test cycle	Water type	*E. coli* (CFU/100 mL)	Enterococci (CFU/100 mL)	*Vibrio cholerae* (CFU/100 mL)
No. 1	Inlet control	28	<10	Absent
	Inlet BWMS	<10	<10	Absent
	Control discharge	<10	<10	Absent
	Treated discharge	<10	<10	Absent
No. 2	Inlet control	<10	<10	Absent
	Inlet BWMS	<10	<10	Absent
	Control discharge	<10	<10	Absent
	Treated discharge	11	<10	Absent
No. 3	Inlet control	<10	<10	Absent
	Inlet BWMS	<10	<10	Absent
	Control discharge	<10	21	Absent
	Treated discharge	<10	<10	Absent
No. 4	Inlet control	14	<10	Absent
	Inlet BWMS	14	<10	Absent
	Control discharge	<10	17	Absent
	Treated discharge	<10	<10	Absent
No. 5	Inlet control	32	<10	Absent
	Inlet BWMS	25	10	Absent
	Control discharge	290	250	Absent
	Treated discharge	11	10	Absent
No. 6	Inlet	69	32	Absent
	Control discharge	39	21	Absent
	Treated discharge	<10	<10	Absent
Require-ments	Treated discharge	<100	<250	<1

CFU Colony-forming units

In the treated water, the contents of *E. coli* and enterococci were either below the detection limit or close to the detection limit in all test cycles. *Vibrio cholerae* was not identified in any of the test cycles.

11 Quality assurance and quality control

The biological efficacy performance evaluation in shipboard test of the PureBallast 3.0 was conducted in accordance with ISO 9001 by using the DHI Business Management System certified by DNV GL. The DHI Environmental Laboratory is accredited by DANAK, the Danish Accreditation and Metrology Fund, to perform ecotoxicological studies and analyses aiming at the performance evaluation of BWMS in accordance with ISO 17025. The performance evaluation also complied with the conditions included in the Quality Management Plan (QMP), QAPP, Test plan and SOPs. One deviation describing an unplanned change to the Test Plan and six amendments describing planned changes to the Test Plan were made during the performance evaluation period. The QMP, Test Plan (including QAPP), deviation and amendments are included in Appendix A.

The acting classification society for the shipboard performance evaluation of PureBallast 3.0 was DNV GL. The Test Plan and Amendment No. 1 to the Test Plan were approved by DNV GL on 8 February 2013, DNV GL staff also conducted three onsite inspections during ballast/de-ballast operations of test cycle Nos. 1, 2 and 6. The inspections included the activities on board the vessel M/V TURANDOT. The comments from the DNV GL review of the Test Plan and the onboard inspections were addressed in the final version of the Test Plan, Amendment No. 1 to the Test Plan and in this final report.

12 References

/1/ IMO. International Convention for the Control and Management of Ships' Ballast Water and Sediments. London. International Maritime Organization, 2004.

/2/ U.S. Coast Guard. Standards for Living Organisms in Ships' Ballast Water Discharged in U.S. Waters. Federal Register, Vol. 77, No. 57, 23 March 2012.

/3/ U.S. Environmental Protection Agency, Environmental Technology Verification Program. Generic Protocol for the Verification of Ballast Water Treatment Technology. EPA/600/R-10/146, September 2010.

/4/ MEPC. Guidelines for Approval of Ballast Water Management Systems (G8). Resolution MEPC.174(58). Adopted 10 October 2008.

/5/ http://www.walleniuslines.com/global/fleet_fact_sheets_pdf/turandot.pdf

/6/ http://sagaweb.2wglobal.com/AppSchedules/vesselSearch.do

APPENDIX A

QMP and Test Plan (including QAPP) with Deviation No. 1 and Amendments Nos. 1-6

Quality Management Plan

Biological Efficacy Performance Evaluation of Ballast Water Management Systems

DHI Denmark

Version 3.2

WATER • ENVIRONMENT • HEALTH

October 2012

Quality Management Plan

Biological Efficacy Performance Evaluation of Ballast Water Management Systems

DHI Denmark
Version 3.2

Agern Allé 5
DK-2970 Hørsholm

Tel: +45 4516 9200
Fax: +45 4516 9292

E-mail: gip@dhigroup.com
Web: www.dhigroup.com

Project	Project No.
Quality Management Plan Biological Efficacy Performance Evaluation of Ballast Water Management Systems DHI Denmark Version 3.2	
Author Gitte I. Petersen	Date 2012.10.31 Approved by Torben Madsen

Revision	Description	By	Checked	Approved	Date
3.2	QMP	GIP	TMA	TMA	2012.10.31

Key words	Classification
	☐ Open ☐ Internal ☒ Proprietary

Distribution	No. of copies
Manufacturer (client) Classification society or Independent Laboratory DHI: /EAT	

CONTENTS

1 DEFINITIONS 1

2 INTRODUCTION 2

3 SERVICES 2

4 ORGANISATION 3
4.1 Quality Assurance Manager 4
4.2 Head of Department 4
4.3 Project Coordinator 5
4.4 Head of Projects and Laboratory Manager 6
4.5 Project Manager 6
4.6 Academic staff, laboratory staff and secretaries 7
4.7 Manufacturer 7

5 TRAINING 7

6 PERFORMANCE OF PROJECT 8
6.1 Contract 8
6.2 Quality Assurance Project Plan 8
6.3 Test Plan 8
6.4 Services 9
6.4.1 Laboratory tests 9
6.4.2 Pilot tests 9
6.4.3 Land-based tests 9
6.4.4 Shipboard tests 10
6.5 Reports 10
6.5.1 Performance evaluation of BWMS aiming at type approval 10

7 QUALITY MANAGEMENT PROCESSES 10
7.1 Quality assurance 10
7.2 Document and record control 11
7.3 Subcontractor management 11
7.4 Staff competence management 11
7.5 Facility management 12
7.6 Management review 12
7.7 Complaint management 12

8 REFERENCES 12

APPENDICES

A DHI Standard Operating Procedures (DHI SOPs)
B Overview of lists
C Template for Amendments to QAPP
D Template for Deviations to QAPP

1 DEFINITIONS

Terms/Abbreviations	Definitions
Active substance	Active substance means a chemical or an organism, including a virus or a fungus, that has a general or specific action on or against nonindigenous species
Ballast water management system (BWMS)	A system which processes ballast water to kill, render harmless or remove organisms. The BWMS includes all ballast water treatment equipment and all associated control and monitoring equipment
Classification society	Independent classification society that conducts formal verification of the procedures applied in performance evaluation of BWMS
DHI Standard operating procedure (DHI SOP)	Document describing the procedures or characteristics for analyses, operations or tests Note: In-house methods may be used in the absence of a recognized standard, if they are commonly accepted for testing of BWMS or scientifically documented
Guidelines and standards	Guidelines means the IMO Guidelines for Approval of Ballast Water Management Systems (G8) (Reference /2/) and Procedure for Approval of Ballast Water Management Systems that Make Use of Active Substances (G9) (Reference /3/) or the U.S. Coast Guard Standards (Reference /4/) and the ETV protocol (Reference /5/)
IMO convention	The International Convention for the Control and Management of Ship's Ballast Water and Sediments adopted by the International Maritime Organization (IMO) (Reference /1/)
Independent Laboratory	Independent organisation that meets the requirements in 46 CFR 159.010-3
International Maritime Organization (IMO)	United Nations specialized agency with responsibility for the safety and security of shipping and the prevention of marine pollution by ships
Manufacturer (or client)	The manufacturer of a BWMS or related technology, or a party associated with such technologies, requesting a technology performance evaluation (sometimes referred to as vendor); the manufacturer is the party entering a Contract with DHI on the performance evaluation of the BWMS
Quality Assurance Project Plan (QAPP)	Project-specific technical document reflecting the implementation of quality assurance and quality control activities, the testing organisation, the testing conditions and analyses, and other conditions affecting the actual design and implementation of the required tests and evaluations Note: The DHI Business Management System applies Quality Assurance Plan as the equivalent term for the QAPP
Quality Management Plan (QMP)	Generic standard operating procedure within the DHI Business Management System describing the project management and quality control management structure
Services	When used in this QMP the term 'services' has the meaning described in Chapter 3
Test Plan	Project-specific technical document reflecting the specifics of the BWMS to be tested, the appointed classification society or Independent Laboratory, the selection of analytical procedures described in the QAPP, and other specific conditions related to the actual BWMS performance evaluation

U.S. Coast Guard	The U.S. Coast Guard is an organisation with the United States Department of Homeland Security. The Coast Guard is amending its regulations on ballast water management and engineering equipment by establishing a standard for the allowable concentration of living organisms in ships' ballast water discharged in waters of the United States and by establishing an approval process for BWMS

2 INTRODUCTION

The International Maritime Organization (IMO) has adopted the International Convention for the Control and Management of Ships' Ballast Water and Sediments /1/ to reduce the risk of spreading of harmful aquatic organisms and pathogens released with ballast water.

The IMO convention requires that all ships comply with specified water quality requirements (D2) before ballast water is released into the environment.

The performance evaluation of ballast water management systems (BWMS) aims at documenting compliance with the requirements stated in international guidelines, e.g.:

- Guidelines for Approval of Ballast Water Management Systems (G8) /2/
- Procedure for Approval of Ballast Water Management Systems that Make Use of Active Substances (G9) /3/.

DHI provides services in relation to performance evaluation of maritime technologies and particularly BWMS. DHI's land-based test facility in Denmark, the DHI Maritime Technology Evaluation Facility, is located in Hundested. DHI has also a land-based test facility for performance evaluation of BWMS in Singapore.

The DHI Ballast Water Centre is a coordinating structure between DHI Denmark and DHI Singapore. DHI Ballast Water Centre is organized with a Ballast Water Facility Board including two members from the management in DHI Denmark and two members from the management in DHI Singapore. The object of the Board is to coordinate the development and marketing of services related to the performance evaluation of BWMS within the DHI Group.

The Quality Management Plan (QMP) is a generic standard operating procedure within the DHI Business Management System.

3 SERVICES

The QMP covers the services provided by DHI Denmark at the facilities below:

DHI
Agern Allé 5
DK-2970 Hørsholm
Denmark

and

DHI Maritime Technology Evaluation Facility
Færgevejen 18
DK-3390 Hundested
Denmark

The services include:

- Laboratory tests of BWMS, or ballast water treatment equipment, normally conducted at the DHI environmental laboratory in Hørsholm, Denmark, and aiming at e.g. proof-of-concept or technology optimisation prior to initiation of formal performance evaluation meeting the guidelines
- Pilot-tests of BWMS, or ballast water treatment equipment, conducted at the test facility or other facilities than a laboratory, and aiming at e.g. proof-of-concept or technology optimisation prior to initiation of formal performance evaluation meeting the guidelines
- Land-based tests of BWMS, or ballast water treatment equipment, conducted at the test facility and aiming at formal performance evaluation meeting the guidelines (e.g. type approval)
- Shipboard tests of BWMS, or ballast water treatment equipment, conducted on board vessels on which the technology is installed and aiming at formal performance evaluation meeting the guidelines (e.g. type approval).

The above activities are collectively referred to as the “services” whereas individual activities are referred to as “projects”.

The aim of the services is to provide independent, third party documentation for the performance of maritime technologies. High quality of the services is ensured through extensive quality management and use of skilled staff.

4 ORGANISATION

DHI’s project organisation is illustrated below.

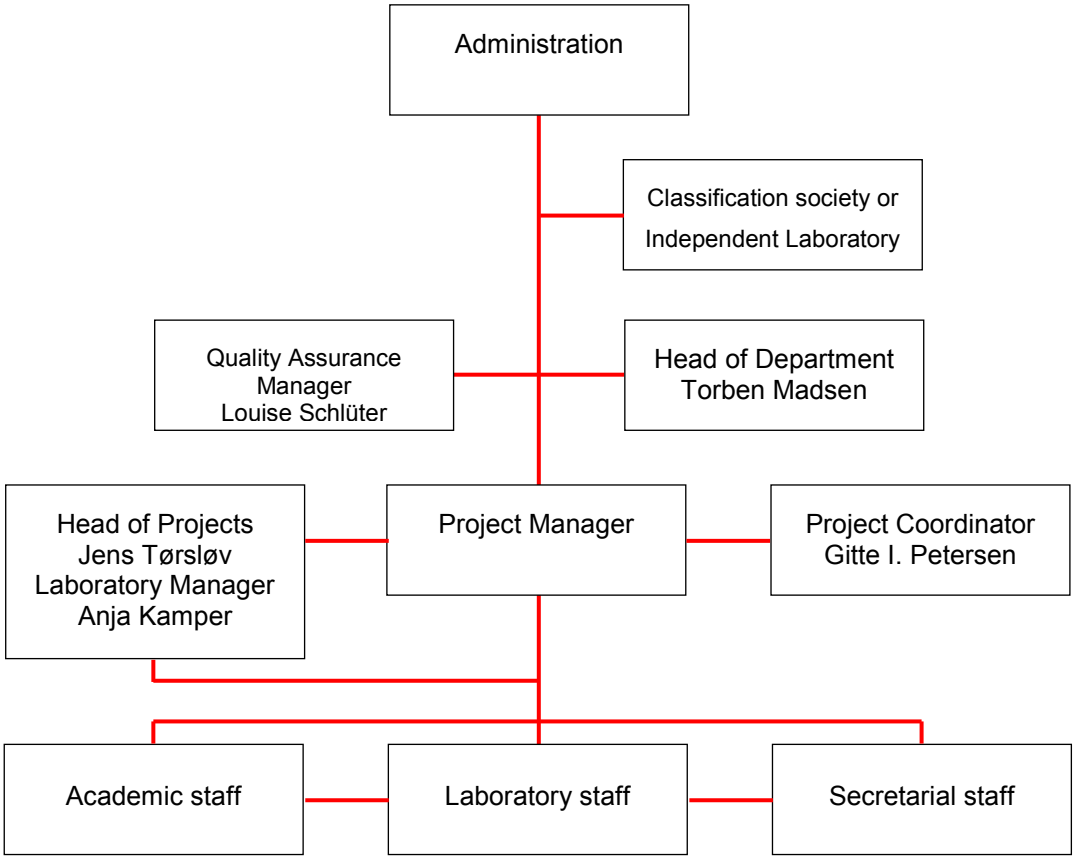

4.1 Quality Assurance Manager

Senior biologist Louise Schlüter (Ph.D.) is assigned by DHI's Quality Assurance (QA) Unit as internal auditor. This includes the following tasks:

- Drafting of a plan for quality assurance
- Monitoring of compliance with the Quality Management Plan (QMP), the Quality Assurance Project Plan (QAPP), the Test Plan and the DHI standard operating procedures (DHI SOPs) by audit including the Project Manager and the laboratory staff
- Monitoring compliance with the appropriate guidelines or standards by audit including the Project Manager
- Verification of the presence of applicable staff training records
- Drafting of audit reports and verification that audit responses are appropriate and that corrective action has been implemented effectively
- Verification that the final product complies with DHIs standards for QA and, particularly, the QMP, the QAPP, the Test Plan and the guidelines and standards

4.2 Head of Department

Head of Department Torben Madsen (Ph.D.) is quality supervisor for all projects (described in the section on Services) and has the overall responsibility for the services

related to performance evaluation of BWMS provided by DHI Denmark. This includes the following tasks:

- Member of the Ballast Water Test Facility Board for DHI Ballast Water Centre, a coordinating structure between DHI Denmark and DHI Singapore
- Overall responsibility for the test facility and the environmental laboratory including safe conditions of work and decisions on investments and maintenance expenses
- Overall responsibility for the liaison and contractual relations between DHI and Lloyds Register EMEA (certification of test facility), between DHI and the Danish Accreditation and Metrology Fund, DANAK (accreditation of analyses), and between DHI and the Independent Laboratory (subcontractor agreement)
- Negotiation of contracts with manufacturers (or clients)
- Appointment of Project Managers and staff responsible for quality control (QC) of individual data (data-level QC) and maintenance of staff experience records (allocation of Project Managers for specific projects is the responsibility of the Head of Projects)
- Maintenance of the QAPP and the QMP with updated versions as appropriate
- Quality control of the QAPP, Test Plan, DHI SOPs and all project proposals, deliverables and reports
- Documentation in relation to
  - Staff training and experience
  - Facilities and their maintenance
  - Records of complaints

4.3 Project Coordinator

Business Area Manager Gitte I. Petersen (Ph.D.) is responsible for the coordination, timely execution and the overall scientific quality of the services. This includes the following tasks:

- Business development and marketing
- Contact and dialogue with Lloyds Register EMEA prior to inspections and for management of the actions and documentation, in collaboration with the Laboratory Manager, as required to comply with the Certificate of Compliance issued by Lloyds Register EMEA
- Contact and dialogue with the Independent Laboratory prior to inspections and for management of the actions and documentation, in collaboration with the Laboratory Manager, as required to comply with the agreement between DHI and the Independent Laboratory
- Coordination of the services to ensure optimal logistics at the test facility, including decisions related to the practical installation of manufacturers and their technology and timing of tests
- Maintenance of the test facility including routine technical maintenance and dialogue with the Head of Department in relation to investments and maintenance expenses
- Instruction of staff with responsibility for specific tasks such as, e.g., test facility technical operations and production of test water

- Principal scientific expert with responsibility for the overall scientific quality of the services including compliance with official guidelines, standards, protocols, and requirements from classification societies and Independent Laboratories; this implies input to the QAPP and the Test Plan, revisions and implementation of DHI SOPs, and contributions to data interpretation and reporting in collaboration with the Project Manager
- Participation in discussions with the classification society or Independent Laboratory on important matters, particularly draft and final reports, together with the Project Manager

4.4 Head of Projects and Laboratory Manager

Head of Projects Jens Tørsløv (Ph.D.) has the overall responsibility for allocation of staff, planning and project execution in coordination with the Project Coordinator or the Project Manager as appropriate.

Laboratory Manager Anja Kamper (M.Sc.) allocates laboratory technicians for a specific project as part of the laboratory capacity planning by allocation of responsibility from the Head of Projects. Furthermore, the Laboratory Manager appoints one or more test co-ordinators among the laboratory technicians or the academic staff for on-site coordination of land-based test cycles.

The Laboratory Manager is responsible for the contact and dialogue with DANAK prior to inspections and for management of the actions and documentation as required to comply with the ISO 17025 accreditation.

4.5 Project Manager

The **Project Manager** is responsible for the management and efficient performance of the project in accordance with the Contract between the manufacturer and DHI, the QMP, the QAPP and the Test Plan.

The Project Manager's tasks include:

- Organisation and management of the project
- Meetings and other communication with the manufacturer to ensure that all necessary information is available in due time
- Preparation of the draft and final Test Plan with detailed description of the project, including time schedule of activities and deliverables; the QAPP and the Test Plan shall be made available to all staff participating in the project
- Facilitation of the process for comments and responses to the QAPP and the draft Test Plan in dialogue with the manufacturer and the classification society or the Independent Laboratory
- Preparation of amendments and deviations to the Test Plan
- Communication of the project time schedule to the classification society or the Independent Laboratory to enable external audit
- Participation in discussions with the classification society or the Independent Laboratory on important matters, particularly draft and final reports, together with the Project Coordinator

- Coordination and dialogue with the Laboratory Manager in relation to the practical organisation of work involving laboratory technicians; the Project Manager shall in due time inform the Laboratory Manager on the types of tests and the required capacity to enable laboratory capacity planning
- Contracts with subcontractors (e.g. chemical analytical laboratory) as appropriate for meeting the project deliverables
- Approval of initiation of the test cycles and interruption of test cycles, e.g. in case of irregularity
- Preparation of reports

4.6 Academic staff, laboratory staff and secretaries

The tasks of the academic staff, the laboratory staff and the secretaries include:

- Maintenance of materials and equipment
- Test facility technical operations
- Test coordinator function, i.e. coordination and keeping timely records of the activities at the test facility during land-based tests
- Production of test water and monitoring of test water quality
- Sampling at the test facility
- Analysis and data processing, including data-level QC
- Contributions to test reports
- Archiving of documents and raw data
- Contributions to QAPPs, Test Plans and DHI SOPs

4.7 Manufacturer

The tasks of the representative of the manufacturer include:

- Signing a Contract with DHI for the BWMS performance evaluation project
- Project management of the manufacturers activities in the project, including the liaison with DHI and decisions in relation to the testing
- Review and comments to the draft Test Plan and approval of the final Test Plan
- Collaboration with DHI to establish all necessary arrangements prior to initiation of the test
- Review and comments to draft test reports
- Analysis and data processing, including data-level QC
- Dismantling and removal of the BWMS from the test facility after ended testing

5 TRAINING

The Quality Assurance Manager verifies the presence of appropriate training records for staff participating in performance evaluation of BWMS (Section 4.1). The Head of Department is responsible for the appointment of specific staff and documentation of training and experience records for the staff conducting the operations, sampling, analyses, data-interpretation and reporting in relation to performance evaluation of BWMS. Staff

without experience in the tasks required for the performance evaluation of BWMS receives appropriate training by a peer with documented experience in the relevant tasks before participation in the testing of BWMS. Approval of staff after completed training is the responsibility of the Head of Department who appoints Project Managers and staff responsible for QC (Section 4.2), and the Laboratory Manager who appoints laboratory technicians and test coordinators for specific tasks (see Section 4.4). Laboratory technicians (and academic staff conducting analyses) must demonstrate the required skills at least once per year by use of the data quality indicators in the relevant DHI SOPs.

For performance evaluation projects, where the equipment shall be operated by DHI, the manufacturer is required to provide training of the DHI staff prior to the start of testing. DHI documents the training with a statement, signed by the manufacturer, describing the names of DHI staff who have received the training and, if appropriate, confirms that this staff have achieved the skills to train other DHI staff members.

6 PERFORMANCE OF PROJECT

6.1 Contract

A Contract between the manufacturer and DHI is negotiated and signed according to the DHI manual for project management.

6.2 Quality Assurance Project Plan

The QAPP corresponds to the Quality Assurance Plan in the DHI Business Management System. The QAPP is a project-specific technical document reflecting the implementation of quality assurance and quality control activities, the testing organisation, the testing conditions and analyses, and other conditions affecting the actual design and implementation of the required tests and evaluations.

The performance evaluation of the BWMS is described by the QAPP together with the specific details provided in the Test Plan. A QAPP (and a Test Plan) are required for performance evaluation of BWMS in land-based or shipboard tests conducted according to international guidelines and standards, but these documents may be applied for any study where a formal study protocol is needed.

6.3 Test Plan

The Test Plan is a project specific technical document reflecting the specifics of the BWMS to be tested, the appointed classification society or Independent Laboratory, the selection of analytical procedures described in the QAPP, and other specific conditions related to the actual BWMS performance evaluation

The Test Plan is

- Prepared by the project manager
- Signed by the Project Manager and the Head of Department (quality supervisor)

- Forwarded to the classification society or Independent Laboratory for review and comments
- Forwarded to the manufacturer for review, acceptance and signature.

The Test Plan typically includes the following titles:

1. Project description and treatment performance objectives
2. Project organisation and personnel responsibilities
3. Description of testing laboratory
4. Description of ballast water management system
5. Experimental design
6. Sampling and analysis plan
7. Data management, analyses and reporting
8. Amendments and deviations
9. Land-based (or shipboard) testing requirements
11. Time schedule
12. References

Amendments and deviations to the Test Plan are approved and signed by the Project Manager. Amendments describe planned changes whereas deviations describe unplanned changes to the Test Plan.

6.4 Services

The project will be conducted as described in the QAPP and the Test Plan with subsequent amendments and deviations or, alternatively, as described in the Contract between the manufacturer and DHI.

6.4.1 Laboratory tests

Laboratory tests can be initiated when the technology is ready for testing and DHI's deliverables are defined. Initiation of testing is decided by the Project Manager in agreement with the manufacturer.

6.4.2 Pilot tests

Pilot tests can be initiated when the technology is installed and ready for operation. Initiation of testing is decided by the Project Manager in agreement with the manufacturer.

6.4.3 Land-based tests

Land-based tests can be initiated when the technology, typically a fully integrated BWMS, is installed and ready for operation. Initiation of testing is decided by the Project Manager in agreement with the manufacturer.

The Project Manager decides when a test cycle in the land-based test is completed and valid, when appropriate by reference to the IMO G8 or G9 guidelines /2; 3/, US standards /4; 5/ or other standards. If required, the Project Manager can decide to interrupt a test cycle due to technical malfunctioning of the test facility or the technology, insufficient state of biological or physical parameters or for other reasons related to the quality of the test water.

6.4.4 Shipboard tests

Shipboard testing can be initiated when the technology, typically a fully integrated BWMS, is installed on the vessel and ready for operation. Initiation of testing is decided by the Project Manager in agreement with the manufacturer.

The Project Manager decides when a test cycle in the shipboard test is completed and valid by reference to the IMO G8 guidelines /2/ or, if appropriate, to US standards /4; 5/. If required, the Project Manager can decide to interrupt a test cycle due to technical malfunctioning of the technology, insufficient state of biological or physical parameters or for other reasons related to the water quality.

6.5 Reports

Reports are prepared with the details, format and language described in the Contract between the manufacturer and DHI.

6.5.1 Performance evaluation of BWMS aiming at type approval

For land-based or shipboard tests of BWMS conducted as part of the type approval process (e.g. under the IMO convention or U.S. Coast Guard Standards), the report shall include all relevant technical and analytical data and will typically contain the following items:

- Name of the manufacturer
- Executive summary
- Introduction (including a description of the test facility)
- Experimental design (including the dates for initiation and completion of tests or test cycles and procedures stated in the QAPP and the Test Plan)
- Results (presented in summarizing tables and as raw data)
- Description of the BWMS (provided by the manufacturer)
- The signed QMP, QAPP and Test Plan with all amendments and deviations

The report shall be signed by the Project Manager and the Head of Projects.

The final report will be prepared in English and forwarded to the manufacturer.

7 QUALITY MANAGEMENT PROCESSES

7.1 Quality assurance

The services are conducted in accordance with the principles of ISO 9001 by using the DHI Business Management System and the procedures in the QMP. The DHI Business Management System is found compliant with ISO 9001 as part of the ISO 17025 accreditation of the DHI Environmental Laboratory.

The DHI Quality Manager is responsible for assigning a trained internal auditor from DHI's Quality Assurance Unit to each project in accordance with the procedures for internal audit in the DHI Business Management System (section on Quality). The internal auditor shall not be involved in solving the specific project or in any project deliverables.

The DHI Business Management System (section on Quality; Internal Audit) describes procedures for audit and evaluation and the process of periodic internal auditing of projects and activities including audit responsibilities and planning, auditor training and competences and audit reporting.

The DHI Business Management System (section on Quality; Correction and Prevention) describes procedures for corrective actions, i.e. how deviations identified during operation and auditing are corrected and how future occurrence of the same deviations is prevented (preventive actions).

7.2 Document and record control

The DHI Business Management System (section on Quality; Documents and Records) includes a procedure describing the process of drafting, revising and approving documentation.

The DHI Business Management System (section on Quality/ Laboratory Analysis/ Testing and Products with reference to DHI SOPs 30/921 and 30/937) describes how records of the test are stored, transferred, maintained and controlled in order to ensure data integrity for a period defined in the QAPP, but not shorter than five (5) years after issue of the final report.

7.3 Subcontractor management

The DHI Business Management System (Section on Consulting / Administration / Contracting) describes how it is ensured that subcontractors follow quality requirements.

In addition, analytical laboratories providing analyses of any kind should:

- Maintain an ISO 17025 accreditation with the quality management system required herein.
- Apply accredited analytical methods when available.
- Apply other methods according to either international standard methods or in-house methods that are in all cases validated as required for accredited methods.

DHI SOP 30/700 furthermore describes how it is ensured that purchased items such as chemicals and glassware are controlled, accepted and calibrated.

7.4 Staff competence management

The DHI Business Management System (section on Human Resources; Development) describes how it is ensured that the projects are conducted by staff with adequate competences and knowledge. This is done by maintaining a list of functions in the test process with competence requirements and responsibilities. The list is supported by reference to staff files in the DHI CV database.

7.5 Facility management

The DHI Business Management System (Laboratory Analysis and Testing with reference to DHI SOP 30/945) describes how it is ensured that facilities and equipment are available and fit for the purposes.

7.6 Management review

The DHI Business Management System (section on Quality; Management Review) describes how the DHI management is ensuring that DHI is working according to this QMP through mechanisms such as e.g. an annual management review process.

The Quality Manager is responsible for maintenance and development of the quality system and for the internal auditing of all aspects of the system – with daily reference to the Director, Group R&D and Quality Management. The DHI Business Management System contains rules for reviews of the quality system.

7.7 Complaint management

The DHI Business Management System (section on Customer Satisfaction) describes how complaints are recorded, resolved and reported. If not resolved, complaints are handled according to the Contract between the manufacturer and DHI.

8 REFERENCES

/1/ IMO. International Convention for the Control and Management of Ships' Ballast Water and Sediments. London. International Maritime Organization, 2004.

/2/ MEPC. Guidelines for Approval of Ballast Water Management Systems (G8). Resolution MEPC.174(58). Adopted 10th October 2008.

/3/ MEPC. Procedure for Approval of Ballast Water Management Systems that Make Use of Active Substances (G9). Resolution MEPC.126(53) Adopted 22nd July 2005.

/4/ U.S. Coast Guard. Standards for Living Organisms in Ships' Ballast Water Discharged in U.S. Waters. Federal Register, Vol. 77, No. 57, March 23, 2012.

/5/ U.S. Environmental Protection Agency, Environmental Technology Verification Program. Generic Protocol for the Verification of Ballast Water Treatment Technology. EPA/600/R-10/146, September 2010.

A P P E N D I X A

BMWS testing-specific Standard Operating Procedures (DHI SOPs)

SUBJECT/SUBSUBJECT	DHI SOP NO.
ANALYTICAL METHOD DETERMINATION OF VIABLE ORGANISMS ≥50 µm	30/1700
ANALYTICAL METHOD DETERMINATION OF VIABLE ORGANISMS ≥10 µm AND < 50 µm	30/1701
ANALYTICAL METHOD DETERMINATION OF PRIMARY PRODUCTION OF MICROALGAE	30/1702
ANALYTICAL METHOD DETERMINATION OF VIABLE ALGAE BY RE-GROWTH ASSAY	30/1704
MICROBIOLOGICAL TESTS DETERMINATION OF TOTAL NUMBER OF BACTERIA BY EPIFLUORESCENCE MICROSCOPY	30/1705
MICROBIOLOGICAL TESTS DETERMINATION OF HETEROTROPHIC PLATE COUNT	30/1706
MICROBIOLOGICAL TESTS DETERMINATION OF *VIBRIO CHOLERAE* IN WATER	30/1707
MICROBIOLOGICAL TESTS DETERMINATION OF TOTAL COLIFORM, E.COLI AND ENTEROCOCCI BY Colilert*-18, Enterolert-E or Bio-Rad MUG/MUD kit	30/1708
MEASUREMENT METHOD TRO MEASUREMENT IN WATER	30/1732
HARVESTING, CULTURING AND ADDITION OF ORGANISMS	30/1734
COLLECTION OF SEAWATER	30/1735
COLLECTION OF FRESH WATER	30/1736
CRITERIA FOR TEST WATER ADDITION OF DOC, POC, MM AND BRINE	30/1737
SAMPLING PREPARATION, SUBSAMPLING AND TRANSPORTATION OF SAMPLES	30/1738
DATABASE SAMPLES, LABELS AND DATA SHEETS	30/1750
OPERATION OF THE DHI MTEF	30/1762
CLEANING RETENTION TANKS; PIPINGS AND OTHER EQUIPMENT AT TEST SITE	30/1763
MEASUREMENT METHOD ON-LINE MONITORING OF PRESSURE, TEMPERATURE, FLOW RATES AND QUALITY PARAMETERS AT TEST SITE	30/1764
MEASUREMENT METHOD FLUORESCENCE	30/1765
MEASUREMENT METHOD TURBIDITY	30/1766
DHI MTEF HEALTH AND SAFETY	30/1767
MEASUREMENT METHOD DETERMINATION OF TSS	30/1768
MEASUREMENT METHOD DETERMINATION OF DOC AND POC	30/1769
MEASUREMENT METHOD DETERMINATION OF TRANSMITTANCE	30/1770

A P P E N D I X B

Overview of lists

Overview of lists

The lists mentioned below are kept together with the rest of quality documentation.

Classification society

DHI holds a statement describing the Classification society that has certified the DHI Maritime Technology Evaluation Facility.

List of sub-contractors

DHI keeps a list of sub-contractors used during the test. The list contains information on name of company, address, contact person, e-mail, telephone number and deliveries.

List of project managers

DHI keeps a list of appointed project managers and their experience records. The project manager's competence is documented in an available CV.

List of staff approved for functions at the test facility

DHI keeps a list of persons working at the test facility. The list contains information on the person's activities, responsibility and documentation for training. The person's competence is documented in an available CV.

List of Standard Operating Procedures

DHI keeps a list of DHI SOPs, including those used in relation to projects conducted at the test facility.

A P P E N D I X C

Template for amendments to QAPP

AMENDMENT

AMENDMENT NUMBER

QAPP DOCUMENT TITLE AND MONTH OF ISSUE

DATE OF AMENDMENT

DESSCRIPTION OF AMENDMENT

REASON FOR AMENDMENT

IMPACT OF AMMENDMENT

PREVENTATIVE ACTION

If relevant, action to prevent that the same cause of amendment will occur in the future.

SIGNED BY

_____

Project Manager

Copy to be sent to the manufacturer, the classification society or Independent Laboratory and the DHI Quality Assurance Unit.

A P P E N D I X D

Template for deviations to QAPP

DEVIATION

DEVIATION NUMBER

QAPP DOCUMENT TITLE AND MONTH OF ISSUE

DATE OF DEVIATION

DESCRIPTION OF DEVIATION

REASON FOR DEVIATION

IMPACT OF DEVIATION

PREVENTIVE ACTION

If required, actions to be taken to prevent consequences of deviation

SIGNED BY

_____

Project Manager

Copy to be sent to the manufacturer, the classification society or Independent Laboratory and the DHI Quality Assurance Unit.

Biological efficacy performance evaluation of Ballast Water Management Systems in shipboard test

AlfaWall

Test plan

December 2012

This report has been prepared under the DHI Business Management System certified by DNV and specifically for ballast water management system testing certified by Lloyd's Register	
Quality Management	BWMS Testing
ISO 9001	IMO Resolution MEPC.174(58) Annex part 2
Quality Management System certified according to DS/EN ISO 9001 by Det Norske Veritas, Business Assurance, Danmark A/S	Lloyd's Register

Approved by
18-12-2012 X Approved by Signed by: Torben Madsen

Biological efficacy performance evaluation of Ballast Water Management Systems in shipboard test

Test plan

Prepared for	**AlfaWall**
Represented by	**Per Borin**

M/V TURANDOT

Project No	11812728
Classification	Confidential

Author	*f.* Michael Andersen	

QC	Torben Madsen	

DHI • Agern Allé 5 • DK-2970 Hørsholm • Denmark • Tel: +45 4516 9200 • Fax: +45 4516 9292 • www.dhigroup.com

Contents

1 Project description and treatment performance objectives ... 1
1.1 Background and objectives ... 1
1.2 Testing laboratory ... 1
1.3 Classification society ... 2

2 Project organisation and personnel responsibilities ... 2

3 Description of testing laboratory ... 2

4 Description of ballast water management system ... 3
4.1 Technology performance claims ... 3
4.2 Technology and process description ... 4

5 Experimental design ... 4
5.1 Trial period and locations ... 4
5.2 Biological efficacy test cycles ... 4

6 Sampling and analysis plan ... 5
6.1 Sample overview ... 5
6.2 Samples for enumeration of organisms ≥50 µm ... 5
6.3 Samples for enumeration of organisms ≥10 µm and <50 µm ... 5
6.4 Samples for enumeration of organisms <10 µm ... 5

7 Data management, analyses and reporting ... 6
7.1 Data management ... 6
7.2 Analyses ... 6
7.2.1 Analyses overview ... 6
7.2.2 Organism size class ≥50 µm ... 6
7.2.3 Organism size class ≥10 µm and <50 µm ... 7
7.2.4 Organism size class <10 µm (bacteria) ... 8
7.2.5 Physical/chemical analyses ... 8
7.3 Reporting ... 9

8 Amendments and deviations ... 9

9 Shipboard testing requirements ... 9

10 Time schedule ... 10

11 References ... 10

Approval of Test Plan ... 11

Figures

Figure 2.1 DHI's project organisation ... 2

Tables

Table 6.1 Overview of samples in shipboard test ... 5
Table 7.1 Overview of analyses in shipboard test ... 6

Appendices

A	Quality Assurance Project Plan
B	Data logging format for the shipboard testing with PureBallast 3.0
C	Description of ship and technology.

1 Project description and treatment performance objectives

1.1 Background and objectives

This Test Plan describes the biological efficacy performance evaluation of the ballast water management system (BWMS) in a shipboard test. The Test Plan provides the project specific details, such as the trial periods and locations, whereas the standard procedures and analyses are described in DHI's Quality Assurance Project Plan (QAPP) and the standard operating procedures (SOPs). The QAPP is provided in Appendix A.

AlfaWall, manufacturer of the BWMS PureBallast 3.0, has entered a Contract with DHI on the biological efficacy performance evaluation of the BWMS in a shipboard test.

The mailing address of AlfaWall is:

AlfaWall
Hans Stahles Väg 7
SE-147 80 Tumba
Sweden

The ballast water discharge standard in Regulation D-2 /1/, which is also known as the IMO D-2 standard, and the U.S. Coast Guard Standards for Living Organisms in Ships' Ballast Water Discharge in U.S. Water (/2/; §151.2030) establish similar discharge standards.

The shipboard test will be conducted with the aim to meet the testing requirements in Resolution MEPC.174(58) /3/, which is generally referred to as the IMO G8 guidelines, the U.S. Coast Guard Standards /2/ and the ETV protocol /4/.

Currently, DHI is not recognized as an Independent Laboratory according to the U.S. Coast Guard standards, and DHI shall not be responsible if this fact is taken into account in the evaluation by U.S. Coast Guard.

1.2 Testing laboratory

The project is conducted by DHI Denmark (www.dhigroup.com) with the following facilities:

Mailing address:

DHI
Agern Allé 5
DK-2970 Hørsholm
Denmark
Att. Torben Madsen

DHI Maritime Technology Evaluation Facility
Færgevejen 18
DK-3390 Hundested
Denmark

1.3 Classification society

The classification society appointed by the manufacturer for inspection and certification of the project is:

Det Norske Veritas A/S (DNV)
Veritasveien 1
NO-1363 Høvik
Norway

2 Project organisation and personnel responsibilities

DHI's project manager for the present BWMS performance evaluation is:

Michael Andersen, M.Sc. Environmental engineer

DHI's project organisation is illustrated in Figure 2.1.

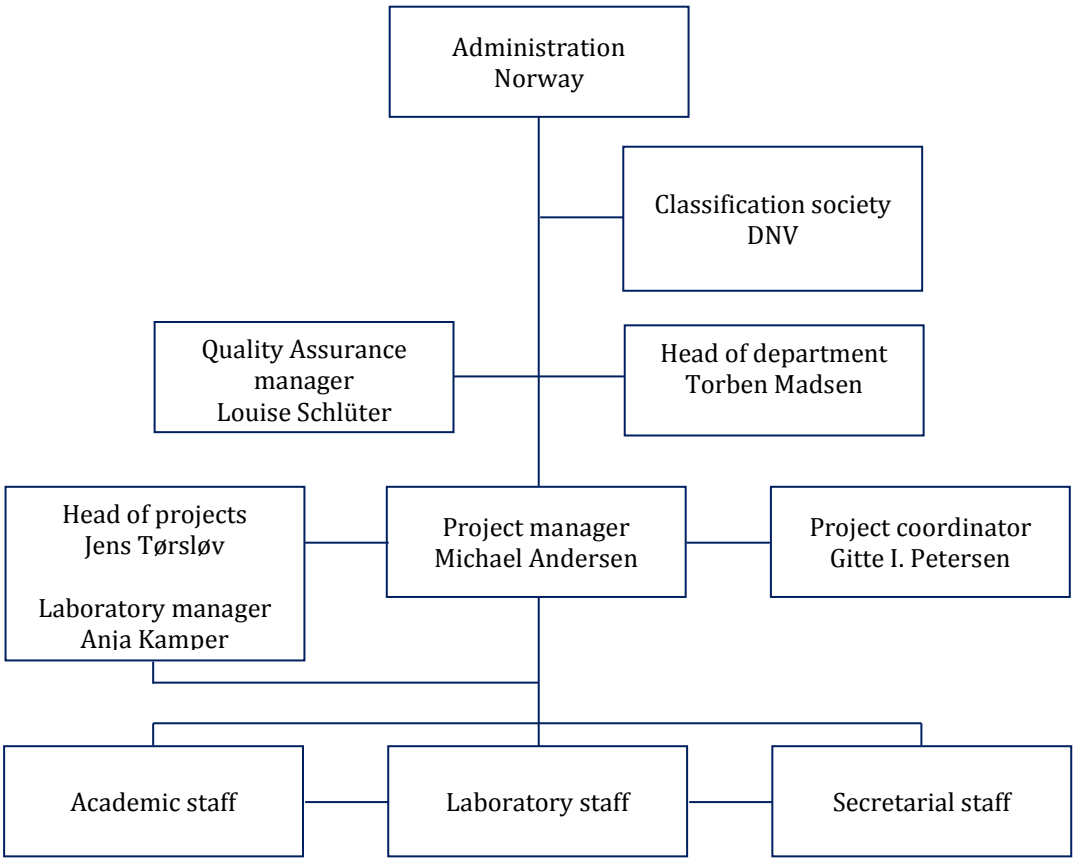

Figure 2.1 DHI's project organisation

A detailed description of the project organisation and the personnel responsibilities is provided in the QAPP.

3 Description of testing laboratory

A detailed description of the testing laboratory including DHI Denmark, DHI Environmental Laboratory, DHI Maritime Technology Evaluation Facility and subcontractors is provided in the QAPP.

4 Description of ballast water management system

4.1 Technology performance claims

AlfaWall states that the PureBallast BWMS meets the following treatment and operation standards (with reference to the information required in the ETV protocol /4/, Section 3.2).

PureBallast is designed to meet the ballast water discharge standard according to IMO D-2 /1/ and U.S. Coast Guard final rule /2/, §151.2030, which should be supported by quantitative measures of biological treatment efficacy expressed as a concentration upon discharge of the specified organism size classes.

The biological treatment efficacy stated above can be achieved by the following quantitative measures of operational performance:

- The main principle of PureBallast treatment is filtration followed by an advanced oxidation technology (AOT)
- The AOT reactor is available in two sizes, one with a treatment rated capacity (TRC) of 310 m^3/h and one with a treatment rated capacity (TRC) of 1,030 m^3/h. To achieve a system with higher flow capacity, it is possible to connect in parallel several reactors

The maritime environmental conditions, at which the PureBallast BWMS can be expected to achieve the biological treatment efficacy stated above:

- The maritime environmental conditions as defined in resolution MEPC.174 (58) Guidelines for approval of Ballast Water Management Systems (G8) and the EPA/600/R-10/146 Generic Protocol for the verification of Ballast Water Treatment Technology (ETV)
- Chemical and biological challenge water quality criteria as defined in resolution MEPC.174 (58) Guidelines for approval of Ballast Water Management Systems (G8) and the EPA/600/R-10/146 Generic Protocol for the verification of Ballast Water Treatment Technology (ETV)
- The most challenging water quality condition for UV-light based systems as the PureBallast is the treated waters UV transmittance. The PureBallast is able to treat water with UV transmittance (UV-T at 254 nm) down to at least 50% at TRC
- Challenge water temperature 0-40°C

Concentration of disinfection residuals, by-products and toxicity for relevant systems:

- The process in the PureBallast AOT reactor operates without addition of chemicals using the synergistic effects of in-situ produced free radicals and UV-photons to inactivate microorganisms. The action of reactive free radicals is of temporal nature, i.e. these species are so short-lived (micro-millisecond time-scale) that they are not observable outside the AOT-treatment unit. The actual UV radiation affects only the surfaces that are directly illuminated, i.e. inside the AOT unit. The only environmental concern of the PureBallast treatment system might be attributed to the reaction products. Chemical analysis of water treated by PureBallast BWMS has shown that it is not possibly to detect any production of residual oxidants (TRO) or change in pH in the water.

Required operational and maintenance conditions (operator time, power requirements, chemical consumption requirements, reliability, etc.):

- The maximum power requirement is 0.1 kW per treated cubic meter of water
- The estimated operation time of the UV lamps is 3,000 hours
- The process in the PureBallast AOT reactor operates without addition of chemicals

- To ensure full performance of PureBallast, a cleaning cycle is to be performed within 30 hours after operation. The purpose is to keep the quartz sleeves covering the UV lamps free of scaling, which otherwise would decreases the efficiency of the AOT

4.2 Technology and process description

The technology and process description including the appropriate sections of the format for the Technical Data Package described in Section 3.10 of the ETV protocol /4/, with safety and environmental hazards and precautions, and photographs or drawings is presented in the System Manual: PureBallast 3.0 Flow 1000 /5/. Description of ship and technology is enclosed in Appendix C.

5 Experimental design

5.1 Trial period and locations

The shipboard test will include five (5) BE test cycles conducted during separate campaigns on board the M/V TURANDOT. The campaigns will be conducted within a trial period with a time span of not less than six months.

The campaigns are planned to be conducted in or between ports in Northern Europe, United Kingdom and, if possible, on the North American east coast.

The first campaign including one test cycle is scheduled to be conducted in the port of Uddevalla between 2012.12.27 and 2012.12.28.

The second campaign including two test cycles is scheduled to be conducted in January 2013 or later and is scheduled to be conducted on route between the ports Bremerhaven, Zeebrugge, Göteborg and Southampton. Details on dates and locations for ballasting and deballasting activities will be provided in an amendment to the Test Plan when this information is available.

The third campaign including two test cycles is scheduled to be conducted in July 2013 or later. Details on dates and locations for ballasting and deballasting activities will be provided in an amendment to the Test Plan when this information is available.

5.2 Biological efficacy test cycles

The BWMS will be operated by the vessel crew during all BE test cycles. Each test cycle consists of sampling and analyses of:

- **Inlet water** (the physical/chemical and biological parameters in the inlet water will be considered as sufficiently stable during the ballasting; unless the local conditions indicate that the parameters in the inlet water vary with time, only one set of samples and analyses will be used to represent the control tank and the ballast tank).
- **Control discharge water** (stored without treatment from the time of ballasting to discharge)
- **Treated discharge water** (treated and stored from the time of ballasting to discharge).

6 Sampling and analysis plan

6.1 Sample overview

Table 6.1 Overview of samples in shipboard test

Test cycle step	Number of samples	Type of sample	Sample volume per replicate
Inlet water	3 replicates	Organisms ≥50 µm	>1 m^3 *
		Organisms 10-50 µm	>1 L **
		Bacteria	>0.5 L ***
		DOC, POC, UV-T	Approx. 0.5 L ***
		TSS	0.5-2 L ***
Control discharge water	3 replicates	Organisms ≥50 µm	>1 m^3 *
		Organisms 10-50 µm	>1 L **
		Bacteria	>0.5 L ***
		DOC, POC	Approx. 0.5 L ***
		TSS	0.5-2 L ***
Treated discharge water	3 replicates	Organisms ≥50 µm	>3 m^3 *
	3 replicates	Organisms 10-50 µm	>3 L **
	3 × 3 replicates	Bacteria	>0.5 L ***
	3 replicates	DOC, POC	Approx. 0.5 L ***
	3 replicates	TSS	0.5-2 L ***

* Collected by continuous flow during the entire period of intake or discharge; for treated discharge, this time integrated continuous sampling of 3 replicates, each of a volume of >3 m^3, provides the same statistical basis for evaluation as the sampling 3 × 3 replicates of >1 m^3, which is recommended in the G8 guidelines

** Collected by continuous flow during the entire period of discharge; for treated discharge, this time integrated continuous sampling of 3 replicates, each of a volume of >3 L, provides the same statistical basis for evaluation as the sampling 3 × 3 replicates of >1 L, which is recommended in the G8 guidelines

*** Grab samples collected over the period of intake or discharge (e.g. start, middle and end)

6.2 Samples for enumeration of organisms ≥50 µm

Three replicates will be collected by parallel continuous sampling during the entire periods of intake and discharge. The samples will be gently filtered through a net with a mesh size of 35 µm and a reservoir (cod-end) at the bottom of the net for collecting the zooplankton. Each replicate will be concentrated in 1-L glass bottles. The total volume of the filtered sample will be determined by a flow meter.

6.3 Samples for enumeration of organisms ≥10 µm and <50 µm

Grab samples will be collected for the inlet water and for the control discharge water (3 replicates each) with each a volume of at least 1 L. Treated discharge water will be collected by continuous flow during the entire period of discharge with each a volume of at least 3 L. The samples will be collected in appropriate containers.

6.4 Samples for enumeration of organisms <10 µm

Grab samples (3 replicates for the inlet water, 3 replicates for the control discharge water, and 3 × 3 replicates for the treated discharge water) with a volume of at least 0.5 L will be collected in appropriate sterile containers with sodium thiosulfate.

7 Data management, analyses and reporting

7.1 Data management

The recording and storage of data are described in the QAPP. A data logging format to be used on board the vessel during each BE test cycle is included in Appendix B.

Documentation according to §162.060-28 (i) of the U.S. Coast Guard Standards for Living Organisms in Ships' Ballast Water Discharge in U.S. Waters /2/ during the entire period of PureBallast shipboard testing operations conducted on the vessel is the responsibility of the AlfaWall. DHI will collect the information relevant for the BE test cycles when DHI staff is present during BE testing (volumes, operation times, flow rates, locations etc.). DHI is only present during BE test cycles and will thus not be accountable for documenting continuous activities regarding the PureBallast installation onboard the vessel (for example scheduled/unscheduled maintenance of the PureBallast, weather conditions and resultant effects, consumption of solutions, preparations or consumables, instrument calibration etc.).

7.2 Analyses

7.2.1 Analyses overview

Table 7.1 Overview of analyses in shipboard test

Samples and replicates	Organisms ≥ 50 µm	Organisms ≥10-<50 µm, microscopy	Organisms ≥10-<50 µm, algal re-growth	Organisms <10 µm	Temperature, salinity, turbidity	UV transmittance	DOC + POC	TSS
Inlet water								
Rep 1 (start)	Three continuous replicates	1	1	1	1	1	1	1
Rep 2 (mid)		2	2	2	2	2	2	2
Rep 3 (end)		3	3	3	3	3	3	3
Control discharge water								
Rep 1 (start)	Three continuous replicates	1	1	1	1	-	1	1
Rep 2 (mid)		2	2	2	2	-	2	2
Rep 3 (end)		3	3	3	3	-	3	3
Treated discharge water								
Rep 1-3 (start)	Three continuous replicates	1	1	1-3	1	1	1	1
Rep 4-6 (mid)		2	2	4-6	4	2	4	4
Rep 7-9 (end)		3	3	7-9	7	3	7	7

The samples for all analyses will be kept cool from the time of collection, and the samples will be processed for analyses within the shortest possible time period.

7.2.2 Organism size class ≥50 µm

Compliance with the pass criterion (Appendix A, QAPP, Chapter 10) will be verified by use of the direct count of organisms ≥50 µm in minimum dimension.

The concentrations of live organisms ≥50 µm in minimum dimension will be determined by use of a stereo microscope and a counting chamber according to DHI SOP 30/1700. Live organisms will be enumerated by use of standard movement and response to stimuli technique. The live organisms will be characterized according to major taxonomic groups. The analyses will be completed on location.

7.2.3 Organism size class ≥10 µm and <50 µm

Compliance with the pass criterion (Appendix A, QAPP, Chapter 10) will be verified by use of the total of viable organisms determined by measuring algal re-growth in a most probable number (MPN) assay and enumeration of viable organisms ≥10 µm and <50 µm in minimum dimension that are not encompassed by the algal re-growth assay (i.e. FDA/CMFDA-labelled organisms without chlorophyll).

Work on location

Samples preserved with Lugol's solution. Inlet and discharge water samples will be preserved with Lugol's solution to enable determination of the concentrations of organisms in the size class ≥10 and <50 µm. The container with inlet or discharge water sample will be shaken gently (upside down 5 times) and subsamples with an approx. volume of 100 mL will be transferred to brown glass bottles. Two subsamples will be collected for one replicate and one subsample will be collected for the remaining two replicates. Lugol's solution will be added to achieve a final concentration of 2% according to DHI SOP 30/1701.

Samples for FDA/CMFDA analysis. The container with the total sample will be shaken gently (upside down 5 times). Subsamples with an approx. volume of 200 mL will be transferred to brown glass bottles. Two subsamples will be collected for one replicate and one subsample will be collected for the remaining two replicates. These subsamples will be stored in the dark and transported to the DHI Environmental Laboratory for further analysis.

Algal re-growth assay. The concentrations of viable algae in the inlet and discharge water samples will be analysed by measuring algal re-growth in a most probable number (MPN) assay. The container with the total sample will be shaken gently (upside down 5 times). One subsample (approx. 10 mL) of undiluted water per replicate will be kept in the dark as 'back-up samples'. Dilution series of the inlet water, control discharge water and treated discharge water will be prepared by adding 1-mL aliquots of sample to test tubes with 5 mL of liquid medium as described in DHI SOP 30/1704. Ten (10) control test tubes containing only 5 mL of medium will be prepared. The test tubes will be kept in the dark at ambient temperature until arrival at the DHI Environmental Laboratory.

Work in laboratory

Samples preserved with Lugol's solution. These samples will be analysed as follows:

- **Inlet water**. Assuming that practically all of the organisms in the natural water are living, fulfilment of the validity criterion for the concentration of organisms ≥10 and <50 µm in the inlet water will be confirmed by inverted microscopy enumeration according to DHI SOP 30/1701. The analyses comprise detailed examination of the algal chloroplasts to confirm that the phytoplankton was alive and classification of the algae according to groups, taxa or species.
- **Control discharge water**. Inverted microscopy enumeration will be applied to confirm that the validity criterion for the concentration of organisms ≥10 and <50 µm in the control discharge water is fulfilled.
- **Treated discharge water**. Inverted microscopy will be applied to quantify the predominant groups, taxa and species ≥10 and <50 µm in the treated discharge water with the purpose to add to the documentation of the algal re-growth assay (see below).

FDA/CMFDA. Fluorescein diacetate (FDA) and chloromethylflourescein diacetate (CMFDA) will be added to a subsample and, after incubation, the subsample will be examined by use of a microscope under epifluorescence. Organisms labelled by either FDA or CMFDA will be considered

viable as described in DHI SOP 30/1701. Only FDA/CMFDA labelled moving organisms without chlorophyll are included in the verification of compliance with the pass criterion..

Algal re-growth assay. Upon arrival to the laboratory, the fluorescence of the test tubes will be determined before incubation (t_0). The test tubes will be incubated for 14 days at ambient temperature as described in DHI SOP 30/1704. The concentrations of viable algae in the inlet water, control discharge water and treated discharge water will be determined by measuring the fluorescence in the test tubes according to DHI SOP 30/1704.

The algal re-growth assay will be documented by the growth of the naturally occurring algae under the conditions applied in the assay. Identification of groups, taxa or species in the local water capable of growth under the applied conditions will be performed with undiluted inlet water and after serial dilution. In addition, the algal groups, taxa or species in the inlet water will be thoroughly analysed and compared with the list of algae capable of growing under the conditions in the algal re-growth assay, which has been obtained during land-based and shipboard test cycles in Hundested, Denmark (some of the groups, taxa or species may be the same across geographic regions). DHI is confident that the algal re-growth assay is conducted with conditions that support the growth of a versatile range of algal species. However, the limited number of test cycles (1 or 2) conducted during a shipboard test voyage implies that the list of algae identified in the inlet water and in the algal re-growth assay will be less comprehensive compared with the list obtained from the large number of test cycles in Hundested.

The algal groups, taxa and species in the Lugol's solution preserved treated discharge water samples will be compared with the identified algae capable of growing under the conditions in the algal re-growth assay. This comparison will enable the confirmation or rejection of whether the predominant groups, taxa or species in the treated discharge water are able to grow under the conditions in the assay (confirmation will mean that the results obtained in the assay may be regarded as a valid quantification of the viable algae in the treated discharge water).

7.2.4 Organism size class <10 µm (bacteria)

Compliance with the pass criterion (Appendix A, QAPP, Chapter 10) will be verified by use of the colony forming units (CFU) enumerated on solid media. The methods for counting of bacteria are described in the QAPP.

Work on location

E. coli and enterococci will be determined according to DHI SOP 30/1708.

For detection of *Vibrio cholerae*, one sample per replicate will be filtered through a 0.45-µm-filter, after which the filter will be kept moist in sterile polyethylene tubes.

Work in laboratory

The possible occurrence of *Vibrio cholerae* will be analysed according to DHI SOP 30/1707.

7.2.5 Physical/chemical analyses

The physical/chemical analyses conducted during the shipboard test include:

- Temperature
- Salinity
- Turbidity
- UV transmittance (UV-T)
- Dissolved organic carbon (DOC)
- Particulate organic carbon (POC)
- Total suspended solids (TSS)

Work on location

Temperature, salinity and turbidity will be measured by use of a portable instrument equipped with electrodes. Measurements will be conducted at regular intervals throughout the inlet and discharge operations.

For determination of DOC and POC, the samples will be treated as described in DHI SOP 30/1769. For determination of TSS, the samples will be filtered through a glass fibre filter, which has already been weighed in the laboratory as described in DHI SOP 30/1768. For determination of UV-T, a subsample with a volume of 100-200 mL for each replicate will transferred to glass bottles and kept in the dark until arrival at the DHI Environmental Laboratory.

Work in laboratory
Determination of DOC and POC will be performed according to DHI SOP 30/1769. Determination of TSS will be performed according to DHI SOP 30/1768. Determination of UV-T will be performed according to DHI SOP 30/1770.

7.3 Reporting

The following reports will be prepared:

- Interim reports compiling the data from the first and the second campaign
- Draft final report compiling all relevant data from the test cycles, data interpretation and conclusion
- Final report

8 Amendments and deviations

Amendments are planned changes to the Test Plan. Deviations are unplanned changes. Amendments and deviations will be signed by the project manager and documented in the file and the final report.

9 Shipboard testing requirements

The BWMS must comply with all requirements stated in Resolution MEPC.174(58) (Annex, Part 2, Section 2.2) /2, and the U.S. Coast Guard Standards (§162.060-28) /3/.

Specifically for the biological efficacy performance evaluation, the BE test cycles must be conducted throughout a period of operation of at least six months.

Resolution MEPC.174(58), which is also referred to as the IMO G8 guidelines /2/, prescribes that the biological efficacy performance evaluation in the shipboard test may be considered successful, if the results of three (3) consecutive, valid test cycles show discharge of treated ballast water in compliance with Regulation D-2 /1/ (see Appendix A, QAPP, Chapters 8-9).

The U.S. Coast Guard Standards /3/ prescribe that the biological efficacy performance evaluation in the shipboard test may be considered successful, if the results of five (5) consecutive, valid test cycles show discharge of treated ballast water in compliance with the ballast water discharge standard (/3/; §151.2030) which is equivalent to Regulation D-2 /1/ (see Appendix A, QAPP, Chapters 8-9).

10 Time schedule

27-28 December 2012:

- Campaign 1. One BE test cycle conducted on board

15 February 2013:

- Interim report, Campaign 1

January-July 2013:

- Campaign 2. Two BE test cycles conducted on board. Interim report submitted one month after completion of Campaign 2

July-September 2013:

- Campaign 3. Two BE test cycles conducted on board

September-November 2013:

- Draft and final reporting. Final report submitted two months after completion of the third campaign

31 January 2014:

- Completion date

11 References

/1/ IMO. International Convention for the Control and Management of Ships' Ballast Water and Sediments. London. International Maritime Organization, 2004.

/2/ U.S. Coast Guard. Standards for Living Organisms in Ships' Ballast Water Discharged in U.S. Waters. Federal Register, Vol. 77, No. 57, March 23, 2012.

/3/ MEPC. Guidelines for Approval of Ballast Water Management Systems (G8). Resolution MEPC.174(58). Adopted 10th October 2008.

/4/ U.S. Environmental Protection Agency, Environmental Technology Verification Program. Generic Protocol for the Verification of Ballast Water Treatment Technology. EPA/600/R-10/146, September 2010.

/5/ System Manual: PureBallast 3.0 Flow 1000 (document number 9007169).

Approval of Test Plan

DHI Denmark

Project management Date: 2012.12.14

f. Michael Andersen

Quality control Date: 2012.12.14

Torben Madsen

This Test Plan is accepted and my signature authorizes the study to proceed as described in this document.

Manufacturer Date:

Per Borin
AlfaWall AB

APPENDIX A

Quality Assurance Project Plan

Biological efficacy performance evaluation of Ballast Water Management Systems

Quality Assurance Project Plan

Version 2.1
October 2012

This report has been prepared under the DHI Business Management System certified by DNV and specifically for ballast water management system testing certified by Lloyd's Register	
Quality Management	BWMS Testing
ISO 9001	IMO Resolution MEPC.174(58) Annex part 2
Quality Management System certified according to DS/EN ISO 9001 by DNV Det Norske Veritas, Business Assurance, Danmark A/S	Lloyd's Register

Approved by
X
Approved by

Contents

Abbreviations **1**

1 Project description and treatment performance objectives **2**
1.1 Background and objectives 2
1.2 Testing laboratory 2

2 Project organisation and personnel responsibilities **2**
2.1 Quality Assurance manager 3
2.2 Head of department 3
2.3 Project coordinator 4
2.4 Head of projects and laboratory manager 5
2.5 Project manager 5
2.6 Academic, laboratory and secretarial staff 6
2.7 Manufacturer 6

3 Description of testing laboratory **6**
3.1 DHI Denmark 6
3.2 DHI Environmental Laboratory 7
3.3 DHI Maritime Technology Evaluation Facility 7
3.4 Test facility equipment and calibration programmes 10
3.5 Subcontractors 11

4 Description of ballast water management system **12**

5 Performance evaluation in land-based test **12**
5.1 Experimental design 12
5.1.1 Overview of test parameters 12
5.1.2 Source water 16
5.1.3 Biological efficacy test cycles 16
5.1.3.1 BWMS treatment process 16
5.1.3.2 Storage of treated and untreated test water 17
5.1.3.3 Second treatment and discharge of test water 17
5.1.4 Whole effluent toxicity testing 17
5.1.5 Operation and maintenance testing 17
5.2 Challenge conditions in BE verification testing 18
5.2.1 Test water – water quality characteristics 18
5.2.2 Test water – biological organism conditions 18
5.3 Sampling and analysis plan 19
5.4 Analytical procedures 19

6 Performance evaluation in shipboard test **19**
6.1 Experimental design 19
6.1.1 Source water 19
6.1.2 Biological efficacy test cycles 19
6.2 Sampling and analysis plan 19
6.3 Analytical procedures 19

7 Data management, analyses and reporting **19**
7.1 Data management 19
7.2 Analyses 20
7.2.1 Organism size class ≥50 µm 20
7.2.2 Organism size class ≥10 µm and <50 µm 20
7.2.3 Organism size class <10 µm (bacteria) 21
7.2.4 Physical/chemical analyses 21

8 Validity criteria **22**

8.1 Land-based test validity criteria 22
8.2 Shipboard test validity criteria 22

9 Pass criteria 22

10 Quality assurance and control 23
10.1 Quality assurance 23
10.2 Quality control 23

11 References 23

Figures

Figure 2.1 The DHI project organisation 3
Figure 3.1 DHI Maritime Technology Evaluation Facility, Hundested, Denmark 9

Tables

Table 3.1 Specification of sensor and monitoring equipment at the test facility 10
Table 5.1 Comparison of test parameters applied by DHI and the requirements in the IMO G8 and ETV protocol 12
Table 5.2 Minimum water quality characteristics in compliance with the IMO G8 guidelines /2/ and the ETV protocol /5/ 18
Table 5.3 Minimum criteria for densities of live organisms in the test water according to the IMO G8 guidelines /2/ and the ETV protocol /5/ 18
Table 5.4 Criteria for densities of live organisms in the control discharge water according to the IMO G8 guidelines /2/ and the ETV protocol /5/ 18
Table 6.1 Minimum criteria for densities of live organisms in the source water in shipboard test according to the IMO G8 guidelines /2/ and the U.S. Coast Guard Standards /4/ 19

Appendices

A Certificate of compliance, ISO 9001 certificate, accreditation and GLP authorisation
B Overview of DHI SOPs

Abbreviations

Abbreviation	Description
BE	Biological efficacy
BWMS	Ballast water management system
CFU	Colony forming units
CMFDA	Chloromethylfluorescein diacetate
DANAK	Danish Accreditation and Metrology Fund
DNV	Det Norske Veritas
DOC	Dissolved organic carbon
DOM	Dissolved organic matter
DQI	Data quality indicators
FDA	Fluorescein diacetate
IMO	International Maritime Organization
ISPS	International Safety Port System
kVA	Kilovolt-ampere
MEPC	Marine Environment Protection Committee
MM	Mineral materials
MPN	Most probable number
O&M	Operation and maintenance
POC	Particulate organic carbon
POM	Particulate organic matter
PSU	Practical salinity units
QA	Quality assurance
QAPP	Quality Assurance Project Plan
QC	Quality control
QMP	Quality Management Plan
SOP	Standard operating procedure
TSS	Total suspended solids
WET	Whole effluent toxicity

1 Project description and treatment performance objectives

1.1 Background and objectives

For an application for final approval, the IMO International Convention for the Control and Management of Ships' Ballast Water and Sediments /1/ requires a performance evaluation of ballast water management systems (BWMS) according to the principles laid down in Resolution MEPC.174(58) /2/, generally referred to as IMO G8 guidelines, and, for systems that make use of active substances, also Resolution MEPC.169(57) /3/, generally referred to as IMO G9 guidelines. The purpose of the performance evaluation is to assure that BWMS approved by administrations are capable of meeting the ballast water performance standard in Regulation D-2 /1/, also known as the IMO D-2 standard, in land-based and shipboard evaluations and do not cause unacceptable harm to the vessel, crew, environment or public health. The U.S. Coast Guard Standards for Living Organisms in Ships' Ballast Water Discharged in U.S. Waters /4/ (§151.2030) establish a ballast water discharge standard similar to the IMO D-2 standard. According to the U.S. Coast Guard the test set up in land-based test cycles of BWMS must operate as described in the ETV protocol /5/.

1.2 Testing laboratory

The project is conducted by DHI Denmark (www.dhigroup.com) with the following facilities:

Mailing address:

DHI
Agern Allé 5
DK-2970 Hørsholm
Denmark
Att. Torben Madsen

DHI Maritime Technology Evaluation Facility
Færgevejen
DK-3390 Hundested
Denmark

DHI Denmark and its facilities are described in detail in Chapter 3.

2 Project organisation and personnel responsibilities

DHI's project organisation is illustrated in Figure 2.1.

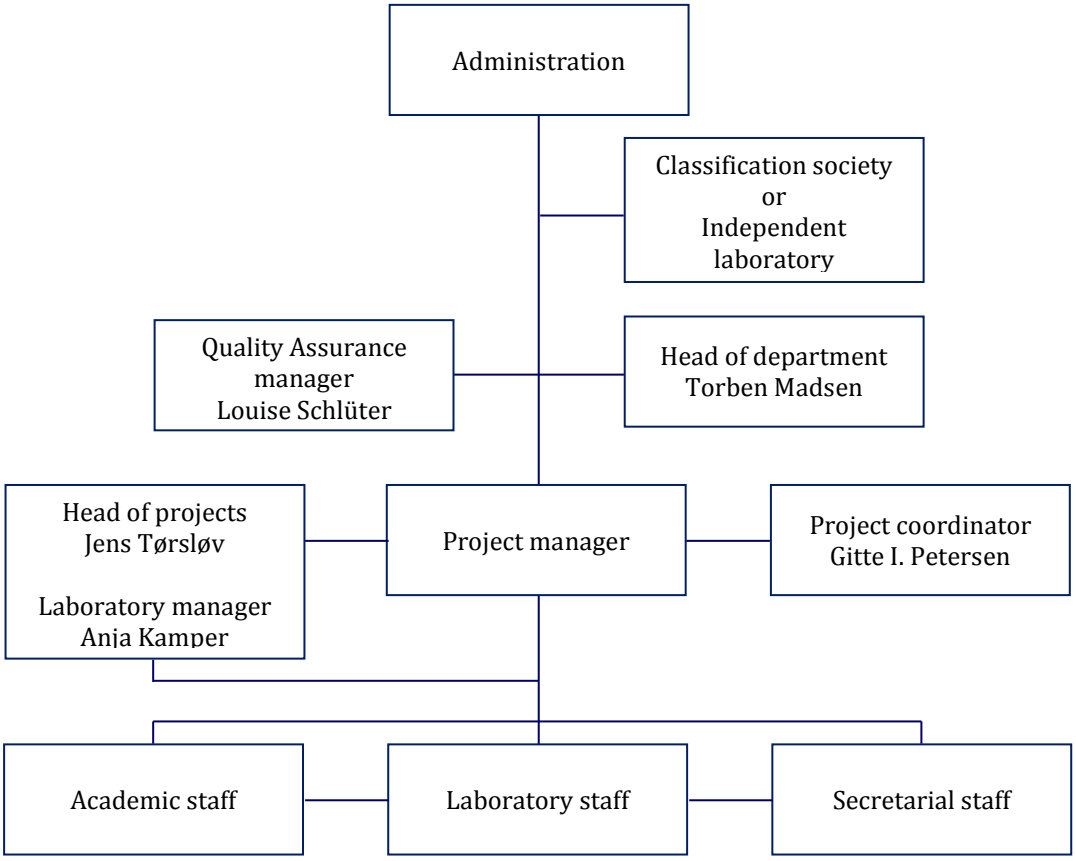

Figure 2.1 The DHI project organisation

2.1 Quality Assurance manager

Senior biologist Louise Schlüter (Ph.D.) is assigned by DHI's Quality Assurance (QA) unit as internal auditor (see Chapter 10). This includes the following tasks:

- Drafting of a plan for quality assurance
- Monitoring of compliance with the Quality Management Plan (QMP), the Quality Assurance Project Plan (QAPP), the Test Plan and the standard operating procedures (SOPs) by audit including the project manager and the laboratory staff
- Monitoring compliance with the appropriate guidelines or standards by audit including the project manager
- Verification of the presence of applicable staff training records
- Drafting of audit reports and verification that audit responses are appropriate and that corrective action has been implemented effectively
- Verification that the final product complies with DHIs standards for QA (Chapter 10) and, particularly, the QMP, the QAPP, the Test Plan and the guidelines and standards

2.2 Head of department

Head of department Torben Madsen (Ph.D.) is quality supervisor for all projects and has the overall responsibility for the services related to performance evaluation of BWMS provided by DHI Denmark. This includes the following tasks:

- Member of the Ballast Water Test Facility Board for DHI Ballast Water Centre, a coordinating structure between DHI Denmark and DHI Singapore

- Overall responsibility for the test facility and the DHI Environmental Laboratory including health and safety in the work place and decisions on investments and maintenance expenses
- Overall responsibility for the liaison and contractual relations between DHI and Lloyds Register EMEA (certification of test facility), between DHI and the Danish Accreditation and Metrology Fund, DANAK (accreditation of analyses), and between DHI and the Independent Laboratory (subcontractor agreement)
- Negotiation of contracts with manufacturers (or clients)
- Appointment of project managers and staff responsible for quality control (QC) of individual data (data-level QC) and maintenance of staff experience records (allocation of project managers for specific projects is the responsibility of the head of projects)
- Maintenance of the QAPP and the QMP /6/ with updated versions as appropriate
- Quality control of the QAPP, Test Plan, SOPs and all project proposals, deliverables and reports
- Documentation in relation to
  - Staff training and experience
  - Facilities and their maintenance
  - Records of complaints

2.3 Project coordinator

Business area manager Gitte I. Petersen (Ph.D.) is responsible for the coordination, timely execution and the overall scientific quality of the services. This includes the following tasks:

- Business development and marketing
- Contact and dialogue with Lloyds Register EMEA prior to inspections and for management of the actions and documentation, in collaboration with the laboratory manager, as required to comply with the Certificate of Compliance issued by Lloyds Register EMEA
- Contact and dialogue with the Independent Laboratory prior to inspections and for management of the actions and documentation, in collaboration with the laboratory manager, as required to comply with the agreement between DHI and the Independent Laboratory
- Coordination of the services to ensure optimal logistics at the test facility, including decisions related to the practical installation of manufacturers and their technology and timing of tests
- Maintenance of the test facility including routine technical maintenance and dialogue with the head of department in relation to investments and maintenance expenses
- Instruction of staff with responsibility for specific tasks such as test facility technical operations and production of test water
- Principal scientific expert with responsibility for the overall scientific quality of the services, including compliance with official guidelines, standards, protocols and requirements from classification societies and Independent Laboratories; this implies input to the QAPP and the Test Plan, revisions and implementation of SOPs, and contributions to data interpretation and reporting in collaboration with the project manager
- Participation in discussions with the classification society or the Independent Laboratory on important matters, particularly draft and final reports, together with the project manager

2.4 Head of projects and laboratory manager

Head of projects Jens Tørsløv (Ph.D.) has the overall responsibility for allocation of staff, planning and project execution in coordination with the project coordinator or the project manager as appropriate.

Laboratory manager Anja Kamper (M.Sc.) allocates laboratory technicians for specific projects as part of the laboratory capacity planning by allocation of responsibility from the head of projects. Furthermore, the laboratory manager appoints one or more test coordinators among the laboratory technicians or the academic staff for on-site coordination of land-based test cycles.

The laboratory manager is responsible for the contact and dialogue with DANAK prior to inspections and for management of the actions and documentation as required to comply with the ISO 17025 accreditation /7/.

2.5 Project manager

The project manager is responsible for the management and efficient performance of the project in accordance with the Contract between the manufacturer and DHI, the QMP, the QAPP and the Test Plan.

The project manager's tasks include:

- Organisation and management of the project
- Meetings and other communication with the manufacturer to ensure that all necessary information is available in due time
- Preparation of the draft and final Test Plan with detailed description of the project, including time schedule of activities and deliverables; the QAPP and the Test Plan shall be made available to all staff participating in the project
- Facilitation of the process for comments and responses to the QAPP and the draft Test Plan in dialogue with the manufacturer and the classification society or the Independent Laboratory
- Preparation of potential amendments and deviations to the Test plan
- Communication of the project time schedule to the classification society or the Independent Laboratory to enable external audit
- Participation in discussions with the classification society or the Independent Laboratory on important matters, particularly draft and final reports, together with the Project Coordinator
- Coordination and dialogue with the laboratory manager in relation to the practical organisation of work involving laboratory technicians; the project manager shall in due time inform the laboratory manager of the types of tests and the required capacity to enable laboratory capacity planning
- Contracts with subcontractors (e.g. chemical analytical laboratory) as appropriate for meeting the project deliverables
- Approval of initiation of the test cycles and interruption of test cycles, e.g. in case of irregularity
- Preparation of reports

2.6 Academic, laboratory and secretarial staff

The tasks of the academic, the laboratory and the secretarial staff include:

- Maintenance of materials and equipment
- Test facility technical operations
- Test coordinator function, i.e. coordination and keeping of timely records of the activities at the test facility during land-based tests
- Production of test water and monitoring of test water quality
- Sampling at the test facility
- Analysis and data processing, including data-level QC
- Contributions to test reports
- Archiving of documents and raw data
- Contributions to QAPPs, Test Plans and SOPs

2.7 Manufacturer

The tasks of the representative of the manufacturer include:

- Signing a Contract with DHI for the BWMS performance evaluation project
- Project management of the manufacturers activities in the project, including the liaison with DHI and decisions in relation to the testing
- Review and comments to the draft Test Plan and approval of the final Test Plan
- Collaboration with DHI to establish all necessary arrangements prior to initiation of the test
- Review and comments to draft test reports
- Dismantling and removal of the BWMS from the test facility after ended testing

3 Description of testing laboratory

3.1 DHI Denmark

DHI is an independent, international consulting and research organisation established in Denmark and today represented in all regions of the world with a total of more than 1,000 employees. Our objectives are to advance technological development, governance and competence in the fields of water, environment and health. DHI works with governmental agencies and authorities, contractors, consultants and numerous industries.

DHI has no involvement, intellectual or financial, in the mechanics, design or marketing of the products and technologies that are being evaluated. To ensure that DHI's tests are uncompromised by any real or perceived individual or team bias relative to test outcomes, DHI's test activities are subject to rigorous quality assurance (QA), quality control (QC) and documentation.

DHI's quality management system is certified according to ISO 9001 by DNV (Det Norske Veritas). The certification is facilitated by the implementation of the DHI Business Management System (see Chapter 10).

3.2 DHI Environmental Laboratory

DHI's Environmental Laboratory has an accreditation according to ISO 17025 /7/ which includes ecotoxicological studies and analyses related to the performance evaluation of BWMS. Furthermore, the laboratory is authorized to carry out ecotoxicological studies in compliance with the OECD Principles of Good Laboratory Practice (GLP) /8/.

DHI's Environmental Laboratory and staff normally analyse all samples collected during the performance evaluation of BWMS. If required, specialized chemical analyses of, e.g., active substances or disinfection by-products, are conducted by a subcontractor identified in the section on Subcontractors.

3.3 DHI Maritime Technology Evaluation Facility

DHI holds a Certificate of Compliance issued by Lloyd's Register EMEA for the performance of land-based and shipboard testing of BWMS (Appendix A).

The travel time from the DHI Maritime Technology Evaluation Facility to the DHI Environmental Laboratory is approx. 50 min, which enables analysis or treatment of the samples within 6 hours.

The test facility is used to conduct biological evaluations of maritime technologies. The test facility is covered by the International Safety Port System (ISPS). Hundested Harbour is registered at the IMO's website (Port facilities) under Port ID No. 266076DKHUN, Port facility 1651.

The test facility includes seven cylindrical tanks constructed in galvanized steel and coated with a non-toxic top coating:

- One open 750-m^3 source tank, Tank D in Figure 3.1. The source tank is equipped with a propeller, which creates a slow circulation in order to maintain the homogeneity of the test water. A bridge across the top of the source tank is established for monitoring the homogeneity.
- Six closed 250-m^3 retention tanks, Tanks A1, B1, C1, A2, B2 and C2 in Figure 3.1. Tanks A1 and A2 are also described as 'control tanks' and are used for untreated test water. Tanks B1, C1, B2 and C2 are retention tanks for treated test water. Each of the six retention tanks is equipped with a submersible agitator (with three-blade propeller) giving the possibility to create a slow circulation in order to maintain homogeneity of the test water.

The piping connecting source tank, control tanks, retention tanks, pump and BWMS is made of polyethylene. The diameters are 315 mm and 350 mm for the piping connecting the A1, B1 and C1 tanks and 400 mm and 500 mm for the piping connecting the A2, B2 and C2 tanks.

The piping system connecting the source tank and the retention tanks is equipped with sampling ports. The sampling ports are equipped with the following sample outlets:

1. Sample outlet for ≥1-m^3 samples (to be used for analysis of organisms ≥50 µm)
2. Sample outlet for ≥10-L samples (to be used for analysis of organisms ≥50 µm and organisms ≥10 to <50 µm)
3. Sample outlet for microbiology samples
4. Sample outlet for samples for analysis of dissolved organic carbon (DOC), particulate organic carbon (POC), total suspended solids (TSS) and transmittance

The test facility is equipped with sensors for automatic logging of flow, pressure, water levels, temperature, dissolved oxygen, pH, salinity and turbidity.

The test facility includes a main pump with a flow performance of 250-500 m^3/hour. By use of a harbour piping, this pump can be used to provide a continuous flow of brackish water directly from the harbour to the BWMS with a capacity of up to approx. 300 m^3/hour. Furthermore, the test facility includes electrical generator power supply up to 150 kVA.

If needed to fulfil the test water quality requirements, appropriate volumes of cultivated organisms can be added to the source tank by an auxiliary pump.

The exact configuration of the test facility piping and equipment may be subject to minor changes.

The procedures, guidelines or characteristics for analyses, operations or tests performed in the DHI Environmental Laboratory, at the test facility or on board a vessel are described in the DHI SOPs.

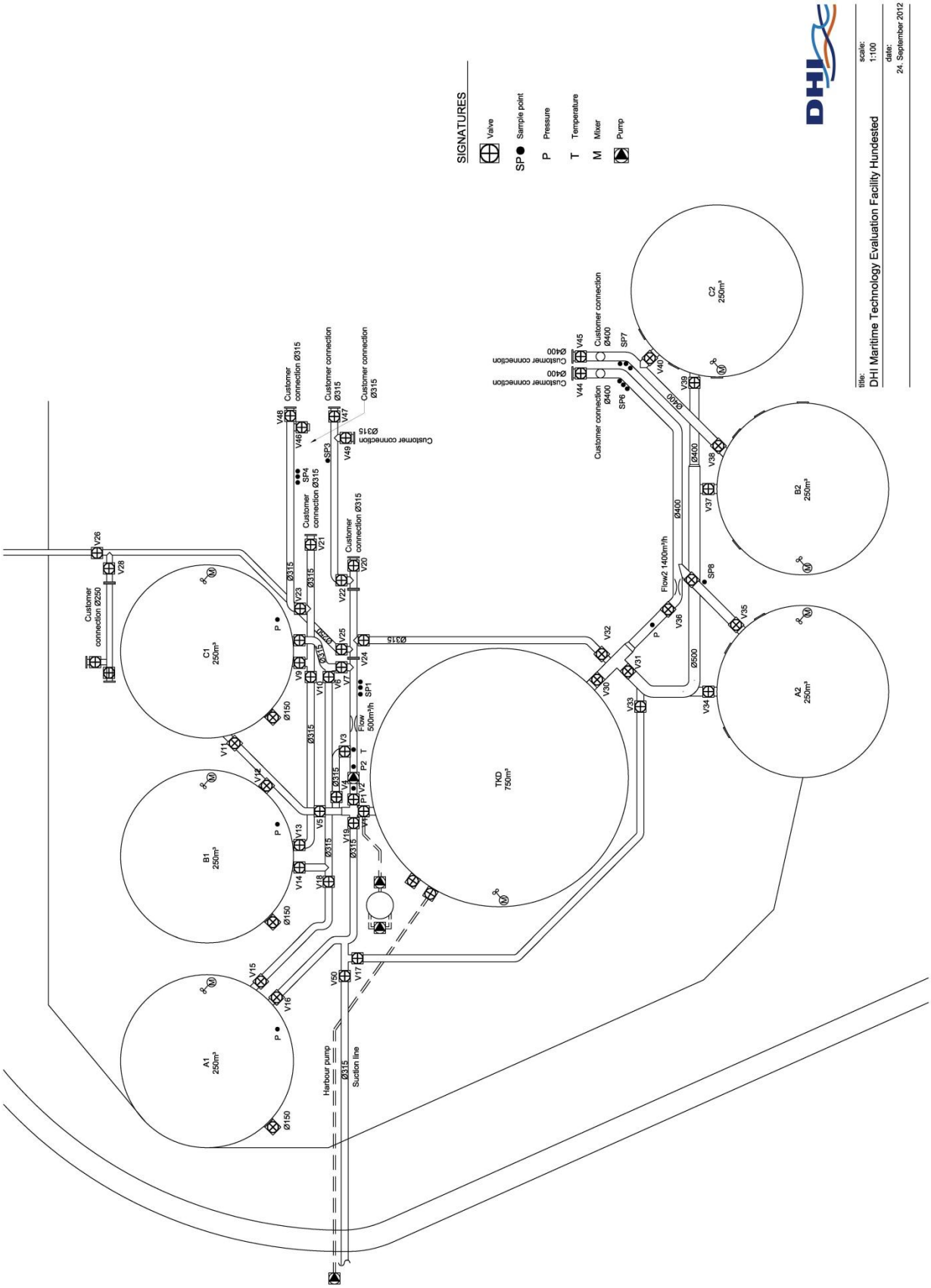

Figure 3.1 DHI Maritime Technology Evaluation Facility, Hundested, Denmark

3.4 Test facility equipment and calibration programmes

Test facility equipment used for analysis of physical-chemical and biological parameters is included in the ISO 17025 accreditation of DHI's Environmental Laboratory. The procedures and frequency for the calibration specific equipment are described in DHI SOPs, and compliance of the equipment with the DHI SOPs is inspected regularly by DANAK.

The test facility is equipped with an on-line monitoring system consisting of several sensors for monitoring of pressure, temperature, flow rate and water quality parameters (Table 3.1).

Table 3.1 Specification of sensor and monitoring equipment at the test facility

No.	Function	Location	Name	Range	Serial No.	Supplier
1	Determination of water level	Bottom of source water tank D	Klay 8000-D-S-I.	0-7.5 mwc*	10204262	Gustaf Fagerberg A/S
2	Determination of water level	Bottom of retention tank C1	Klay 8000-C-S-I.	0-5.4 mwc*	10204265	Gustaf Fagerberg A/S
3	Determination of water level	Bottom of retention tank B1	Klay 8000-C-S-I.	0-5.4 mwc*	10204264	Gustaf Fagerberg A/S
4	Determination of water level	Bottom of retention tank A1	Klay 8000-C-S-I.	0-5.4 mwc*	10204263	Gustaf Fagerberg A/S
5	Determination of water level	Bottom of retention tank C2	Klay 8000-C-S-I.	0-6.0 mwc*	10304331	Gustaf Fagerberg A/S
6	Determination of water level	Bottom of retention tank B2	Klay 8000-C-S-I.	0-6.0 mwc*	10310814	Gustaf Fagerberg A/S
7	Determination of water level	Bottom of retention tank A2	Klay 8000-D-S-I.	0-7,5 mwc*	10304330	Gustaf Fagerberg A/S
8	Determination of pressure in pipes before pump	P1	Klay 8000-E-S-I	0-3.0 bar	10204259	Gustaf Fagerberg A/S
9	Determination of pressure in pipes after pump	P2	Klay 8000-F-S-I	0-4,5 bar	10307332	Gustaf Fagerberg A/S
10	Determination of pressure in pipes after pump	P22	Klay 8000-F-S-I	0-4,5 bar	10304329	Gustaf Fagerberg A/S
11	Determination of pumping flow	Flow	Krohne DN300 Optiflux 2100C with electromagnetig flow converter (IFC100)	0-600 m^3/h	A0991632	Gustaf Fagerberg A/S
12	Determination of temperature in pipes	T	Inor RBS10 PT100 (66RBS10)	0-50°C	v033682 20101042 350120-1	Gustaf Fagerberg A/S
13	Determination of pumping flow	Flow2	Krohne DN400 Optiflux 2000 with electromagnetig flow converter (IFC100)	0-1400 m^3/h	A1094864	Gustaf Fagerberg A/S
14	Determination of pH, temperature, salinity, dissolved oxygen and turbidity before treatment and control discharge	WQ.intake: Sonde equipped with flow chamber connected at relevant sampling point	YSI 6600 V2 data sonde: • 6561 pH sensor • 6150 ROX optical dissolved oxygen sensor • 6136 turbidity sensor	n.a.	11C 101786	YSI inc.
15	Determination of pH, temperature, salinity, dissolved oxygen and turbidity after treatment	WQ.treated: Sonde equipped with flow chamber connected at relevant sampling point	YSI 6600 V2 data sonde: • 6561 pH sensor • 6150 ROX optical dissolved oxygen sensor • 6136 turbidity sensor	n.a.	11C 101787	YSI inc.

* Meter water column

All sensor signals are recorded via 3 Advantech ADAM-6024 modules. Each of these modules can accept 6 analogue input signals (user defined as 0/4-20 mA or ±10 volt), 2 digital input signals, 2 analogue outputs (user defined as 0/4-20 mA or ±10 volt), and 2 digital out-puts. Sensor readings are transferred to an industrial PC type (i-PC) Advantech UNO-2182 running Windows XP sp3. The i-PC is connected to the internet through a 3G modem Huawei B970. The measured data are transferred to an SQL-database running on the PLCSQL server. In the case that the i-PC loses connection to the database-server, the data will be buffered on the i-PC until connection is re-established. Once a day, backup of the database is performed and the backup file is stored on a RAID-5 NAS disk-array placed in another building than the server itself. The client server data management software program DIMS (developed by DHI) is used for handling and storage of the data.

Quality control of the on-line monitoring system is conducted by the activities described below.

The sensor for monitoring of the water level in the source tank (Tank D) is verified by measuring the height of the water columns at maximum and minimum water levels compared to the results from the sensor. Deviations of 3% and 5% are accepted at maximum and the minimum water levels, respectively.

The flow meter is verified by comparing the measured water levels in the tanks with the measured flow. A deviation of 8% is accepted. The control is performed after the sensors for determining the water level have been verified.

The pressure transmitters for monitoring the pressure in the piping are verified by reading the pressure at the maximum and the minimum water levels in the source tank (Tank D) with open piping between the transmitters and the source tank and with a closed valve behind the pressure transmitters. The monitored pressure is compared with the difference in water heights. Deviations of 3% and 5% are accepted at maximum and the minimum water level, respectively.

The thermo sensor is verified by comparing the recorded result with the temperature measured with a traceable thermometer in a time-equivalent flowing sample. A deviation of 1.0°C is accepted.

The water quality sensors are verified by checking the readings in the relevant standard solution. The following deviations are accepted: ±0.2 units for pH, 3% for dissolved oxygen, 5% for turbidity and 2% for conductivity. Verification of dissolved oxygen measurements can also be conducted by comparison between sensors and a calibrated dissolved oxygen meter. All of the water quality sensors require periodic calibration to assure high performance. The calibration is conducted twice per week by use of the relevant standard solution.

Data for all relevant parameters are extracted from the on-line monitoring system and evaluated after each test cycle. The sensors are adjusted and calibrated again in case of non-compliance with the acceptance criteria.

3.5 Subcontractors

Chemical analyses:
MILANA A/S
Bakkegårdsvej 406 A
DK-3050 Humlebæk, Denmark

Microbiology; verification of *Vibrio cholerae* according to DHI SOP 30/1707:
DTU Food
Zoonoselab
Mørkhøj Bygade 19, Bygning H
DK-2860 Søborg, Denmark

4 Description of ballast water management system

A complete description of the BWMS is provided in the Test Plan.

5 Performance evaluation in land-based test

5.1 Experimental design

5.1.1 Overview of test parameters

DHI's land-based test applies high quality facilities and state-of-the-art methods. A comparison of DHI's test parameters with the requirements of the IMO G8 guidelines /2/ and the ETV protocol /5/ is presented in Table 5.1.

Table 5.1 Comparison of test parameters applied by DHI and the requirements in the IMO G8 and ETV protocol

Parameter	Sub-category	IMO G8	ETV protocol	DHI
Organisms to be evaluated	Zooplankton, live organisms ≥ 50 µm in size	Naturally occurring, or cultured organisms may be added to the test water.	Ambient assemblage supplemented by the addition of standard test organisms.	Naturally occurring in the harbour outside the test facility (brackish and marine) and in Lake Arresø (fresh). For brackish and marine tests, enhanced density of natural organisms can be obtained by collection of backwash from a 10 µm mesh low pressure filter; in addition cultured organisms can be added if required.
	Protists, live organisms 10-50 µm in size	Naturally occurring, or cultured species that may be added to the test water.	Ambient assemblage supplemented by the addition of standard test organisms.	Naturally occurring in the harbour outside the test facility (brackish and marine) and in Lake Arresø (fresh). For brackish and marine tests, enhanced density of natural organisms can be obtained by collection of backwash from a 10 µm mesh low pressure filter; in addition cultured organisms can be added if required.
	Bacteria	Naturally occurring, or cultured species that may be added to the test water.	Ambient assemblage supplemented by the addition of standard test organisms.	Naturally occurring in the harbour outside the test facility (brackish and marine) and in Lake Arresø (fresh).
Intake organism diversity and density	Zooplankton, live organisms ≥ 50 µm in size	Organisms ≥50 µm in minimum dimension should be present in a total density of preferably 10^6 individuals but not less than 10^5 individuals per m^3, and should consist of at least 5 species from at least 3 different phyla/divisions.	Total concentration = minimum of 1×10^5 organisms/m^3.	Organisms ≥ 50 µm in minimum dimension are present in a total density above 10^5 live individuals per m^3 and consist of at least 5 species from at least 3 different phyla/divisions.
	Protists, live organisms C in size	Organisms ≥10 µm and less than 50 µm in minimum dimension should be present in a total density of preferably 10^4 individuals but not less than 10^3 individuals per ml, and should consist of at least 5 species	Organisms in the ≥10 µm and <50 µm size class must be present in minimum concentrations of 10^3 organisms/mL with at least 5 species across 3 phyla.	Organisms ≥10 µm and less than 50 µm in minimum visible dimension are present in a total density above 10^3 cells per mL, and consist of at least 5 species from at least 3 different phyla.

Parameter	Sub-category	IMO G8	ETV protocol	DHI
		from at least 3 different phyla/divisions.		
	Bacteria	Heterotrophic bacteria should be present in a density of at least 10^4 living bacteria per mL.	Organisms in the < 10 µm size class must be present in minimum concentrations of 10^3/mL as culturable aerobic heterotrophic bacteria.	Heterotrophic bacteria are typically present in a density of at least 10^4/mL as culturable aerobic heterotrophic bacteria.
Water quality of intake/source water	N/A	• Dissolved organic carbon (DOC): >5 mg/L; • Particulate organic carbon (POC): >5 mg/L; • Total suspended solids (TSS): >50 mg/L.	• Dissolved organic matter: min. 6 mg/L as DOC; • Particulate organic matter (POM): min. 4 mg/L as POC; • Mineral matter (MM): min. 20 mg/L; • TSS = POM + MM: min. 24 mg/L.	Dependent season and location, typical ambient values include: • DOC: 1-7 mg/L; • POC: 0-2 mg/L; • TSS: 1-20 mg/L. DOC, POC and TSS are typically adjusted to increase levels by using lignin sulphonate, maizena and kaolin, respectively.
Salinity of intake/source water	N/A	• Freshwater <3 PSU; • 10 PSU difference to brackish and marine	• Fresh <1 PSU; • Brackish 10-20 PSU; • Marine 28-36 PSU	• Fresh <1 PSU (Lake Arresø); • Brackish 15-28 PSU (harbour outside the test facility); • Marine 28-36 PSU (harbour water augmented by addition of brine)
Sample volume	Zooplankton, live organisms ≥ 50 µm in size	At least 20 L of intake water and 1 m^3 of treated water.	Minimum of 3 m^3 concentrated to 1,000 mL per sample.	Dependent on Test Plan: IMO G8. Inlet: At least 20 L concentrated to approx. 500 mL per sample. Treatment: Minimum 1 m^3, concentrated to approx. 500 mL per sample. USCG/ETV. Inlet: Minimum 1 m^3 concentrated to 500-1,000 mL Treatment: Minimum 3 m^3 concentrated to 500-1,000 mL.
	Protists, live organisms ≥10-<50 µm in size	At least 1 L of intake water and 10 L of treated water.	Minimum of 3 m^3 concentrated to 1,000 mL per sample.	Minimum 10 L per sample. 100-500 mL sub-sample concentrated to 20 mL on treated discharge
	Bacteria	At least 500 mL of intake water and 500 mL of treated water.	1,000 mL per sample.	At least 500 mL per sample*
Number of intake samples	Zooplankton, live organisms ≥ 50 µm in size	Minimum of 3 samples collected from the treatment track and 3 samples collected from the control track.	1 sample immediately prior to water entry to the control tank and 1 sample immediately before entry to the in-line BWMS, or (if control and challenge water are shown to be representative) one sample before the splitter.	IMO G8. 3 samples (start, middle, end). USCG/ETV. Minimum 1x1 m^3 continuous time integrated concentrated to 500-1,000 mL
	Protists, live organisms ≥10-<50 µm in size	Minimum of 3 samples collected from the treatment track and 3 samples collected from the control track.	1 sample immediately prior to water entry to the control tank and 1 sample immediately before entry to the in-line BWMS, or (if control and challenge water are shown to be representative) one sample before the splitter.	3 samples (start, middle, end)
	Bacteria	Minimum of 3 samples collected from the treatment track and 3 samples collected from the control track.	1 sample immediately prior to water entry to the control tank and 1 sample immediately before entry to the in-line BWMS, or (if control and challenge water are shown to be representative) one sample before the splitter.	3 samples (start, middle, end)
Number of discharge samples	Zooplankton, live organ-	Minimum of 3 samples collected from the treat-	1 sample from the discharge of the control tank, and 1 sample	Dependent on Test Plan: IMO: 3 continuous time inte-

Parameter	Sub-category	IMO G8	ETV protocol	DHI
	isms ≥ 50 µm in size	ment track and 3 samples collected from the control track.	from the discharge (following any treatments) of the treated water.	grated samples (min 3 × 1 m^3) collected from the control and treatment lines upon discharge. Representative sub-samples analysed. USCG/ETV: 1 continuous time integrated sample (min 3 m^3) collected from the control and treatment lines upon discharge. The equivalent of an entire cubic meter of discharge water should be examined for the presence of live animals.
	Protists, live organisms ≥10-<50 µm in size	Minimum of 3 samples collected from the treatment track and 3 samples collected from the control track.	1 sample from the discharge of the control tank, and 1 sample from the discharge (following any treatments) of the treated water.	3 × 10 L per sample (start, middle, end). 100-300 mL sub-sample concentrated to 25 mL
	Bacteria	Minimum of 3 samples collected from the treatment track and 3 samples collected from the control track.	1 sample from the discharge of the control tank, and 1 sample from the discharge (following any treatments) of the treated water.	3 × 500 mL per sample (start, middle, end). Representative sub-samples analysed.
Analytic end-points: Discharge density	Zooplankton, live organisms ≥ 50 µm in size	Less than 10 viable organisms per m3 greater than or equal to 50 µm in minimum dimension for treated water; more than 100 viable organisms per m^3 greater than or equal to 50 µm in minimum dimension for control water.	Less than 10 viable organisms per m3 greater than or equal to 50 µm in minimum dimension for treated water; more than 100 viable organisms per m^3 greater than or equal to 50 µm in minimum dimension for control water.	Less than 10 viable organisms per m^3 greater than or equal to 50 µm in minimum dimension for treated water; more than 100 viable organisms per m^3 greater than or equal to 50 µm in minimum dimension for control water.
	Protists, live organisms ≥10-<50 µm in size	Less than 10 viable organisms per mL less than 50 µm in minimum dimension and greater than or equal to 10 µm in minimum dimension for treated water; more than 100 viable organisms per mL less than 50 µm in minimum dimension and greater than or equal to 10 µm in minimum dimension for control water.	Less than 10 viable organisms per mL less than 50 µm in minimum dimension and greater than or equal to 10 µm in minimum dimension for treated water; more than 100 viable organisms per mL less than 50 µm in minimum dimension and greater than or equal to 10 µm in minimum dimension for control water.	Less than 10 viable organisms per mL less than 50 µm in minimum dimension and greater than or equal to 10 µm in minimum dimension for treated water; more than 100 viable organisms per mL less than 50 µm in minimum dimension and greater than or equal to 10 µm in minimum dimension for control water.
	Bacteria	Less than 1 colony forming unit (CFU) per 100 mL or less than 1 CFU/1 g (wet weight) zooplankton of toxicogenic *Vibrio cholerae* (O1 and O139), less than 250 CFU/100 mL of *E. coli*, and less than 100 CFU/100 mL of intestinal enterococci for treated water	Less than 1 CFU per 100 mL or less than 1 CFU/1 g (wet weight) zooplankton of toxicogenic *Vibrio cholerae* (O1 and O139), less than 250 CFU/100 mL of *E. coli*, and less than 100 CFU/100 mL of intestinal enterococci for treated water; Minimum concentration in control tank discharge is 5 x 10^2/mL.	Less than 1 CFU per 100 mL of toxicogenic *Vibrio cholerae* (O1 and O139), less than 250 CFU/100 mL of *E. coli*, and less than 100 CFU/100 mL of intestinal enterococci for treated water; More than 5 × 10^2/mL of heterotrophic bacteria in control tank discharge.
Water quality measurements	N/A	pH, temperature, salinity, dissolved oxygen, TSS, DOC, POC and turbidity (NTU) should be measured at the same time that the samples are collected.	Temperature, salinity, TSS, POM, DOM, mineral matter, dissolved oxygen, pH, chlorophyll a.	pH, temperature, salinity, dissolved oxygen, and turbidity (NTU) is continually measured by on-line monitoring on intake and discharge. TSS, DOC, POC, mineral matter and primary production (indirect measure of chlorophyll a) are measured at the same time that the samples are collected

Parameter	Sub-category	IMO G8	ETV protocol	DHI
Toxicity	N/A	Separate samples should be collected for toxicity testing of treated water, from the discharge, for systems that make use of active substances and also for those, which could reasonably be expected to result in changes to the chemical composition of the treated water such that adverse impacts to receiving waters might occur upon discharge. Tests should conducted in accordance with Resolution MEPC.126(53)) paragraphs 5.2.3 to 5.2.7 as amended.	Toxicity tests will be conducted for treatments involving biocides. Tests will be selected from a short list of U.S. EPA standard tests.	Whole effluent toxicity (WET) tests and residual by-product chemical analyses of control and treated discharge water is performed for systems involving active substances. Tests will be selected from a short list of OECD Guideline standard tests.
Biological sample analysis	N/A	Samples should be analysed as soon as possible after sampling, and analysed live within 6 hour or treated in such a way as to ensure that proper analysis can be performed. Widely accepted standard methods for the collection, handling, storage, and analysis of samples should be used.	Zooplankton enumeration: Concentrate using 35 µm mesh plankton nets; no preservation; subsample into well plate (20 1mL wells observed); observe with dissecting microscope and probe organisms to determine live/dead status; fix with Lugol's for total counts. Phytoplankton enumeration: No preservation; stain with FDA and CMFDA; load into a Sedgewick Rafter Counting Chamber and examine under epifluorescence using a FITC narrow pass filter cube. Bacteria: Plate on appropriate media; use a DNA colony blot hybridisation for *V. cholerae.*	Zooplankton enumeration: Concentrate using 35 µm mesh plankton nets; no preservation; subsample into Borogov counting chamber, observe with dissecting microscope and probe organisms to determine live/dead status; fix with Lugol's for taxonomic evaluation. Phytoplankton enumeration: 1) No preservation; stain with FDA and CMFDA; load into a Sedgewick Rafter Counting Chamber and examine under epifluorescence; 2) Phytoplankton re-growth assay by use of most probable number (MPN) and 3) Measurements of phytoplankton primary production. Bacteria: Enumeration of total viable heterotrophic bacteria, *E. coli*, and enterococci and preparation of colony blots for the detection of toxicogenic *V. cholerae.*
Flow rate	N/A	At least 200 m^3/hr.	At least 200 m^3/hr.	Up to 500 m^3/hr. and not lower than 100 m^3/hr.
Number and capacity of retention tanks	N/A	At least 1 control and 1 treatment tank with a minimum capacity of 200 m^3 each.	At least 1 control and 1 treatment tank with a minimum capacity of 200 m^3 each.	2 control and 4 treatment tanks each with a capacity of 250 m^3.
Control/ treatment cycle sequence	N/A	Control and treatment cycles may be run simultaneously or sequentially.	Control and treatment cycles may be run simultaneously or sequentially.	Control and treatment cycles are typically run sequentially on uptake and on discharge
Retention time	N/A	At least 5 days.	Minimum of one day.	1 to 5 days, dependent on Test Plan.
Number of trials	N/A	At least 5 successes.	Minimum of five consecutive valid per salinity regime.	Minimum of 5 successful test cycles per salinity regime.
QA/QC	N/A	Quality Management Plan (QMP) addressing the quality control management structure and policies of the testing body, including subcontractors and outside laboratories; Quality Assurance Project Plan (QAPP) addressing the	A Test Plan with detailed test objectives, specific test procedures and quality control and assurance requirement shall be developed. A QAPP (annexed to the Test Plan), is to be compiled by the Testing Organisation, with input from the vendor. The QAPP will describe the proce-	Quality Management Plan (QMP) addressing the quality control management structure and policies of DHI; Quality Assurance Project Plan (QAPP) addressing the specifics of the DHI's biological efficacy performance evaluation of BWMS, its facilities, and other conditions affecting the

Parameter	Sub-category	IMO G8	ETV protocol	DHI
		specifics of the ballast treatment technology to be tested, the test facility, and other conditions affecting the actual design and implementation of the required experiments.	dures for conducting a test or study according to the verification protocol requirements for the application of a ballast water treatment system at a particular site. At a minimum, the QAPP shall detail test objectives, specific test procedures (including sample and data collection, sample handling, analysis and preservation), and quality control and assurance requirements (including measures of precision, accuracy, comparability, and representativeness).	actual design and implementation of the required experiments. A Test Plan describing the project specific details reflecting the Contract between the manufacturer and DHI.

5.1.2 Source water

Source water means the body of water, from which water is drawn for the land-based test. The IMO G8 guidelines /2/ and the ETV protocol /5/ describe three distinct water types that may be applied in the land-based test:

Fresh water (salinity <1 PSU)
Brackish water (salinity 10-20 PSU)
Marine water (salinity >32-36 PSU)

When fresh water is used, the source water will be collected in the Arresø Canal according to DHI SOP 30/1736 on collection of fresh water. Organism densities in the collected fresh water often exceed the minimum criteria for live organisms in test water with an order of magnitude allowing for dilution of the natural fresh water with potable water.

When brackish water is used, the source water will be collected immediately south of the pier adjacent to the test facility according to DHI SOP 30/1735; under normal conditions, the natural salinity of the source water will be 15-20 PSU.

When marine water is used, the source water will be collected immediately south of the pier adjacent to the test facility according to DHI SOP 30/1735, and brine will be added to achieve the required salinity.

5.1.3 Biological efficacy test cycles

5.1.3.1 BWMS treatment process

The biological efficacy (BE) test cycles will be conducted by use of the source tank (Tank D), control tank (Tank A1 or A2) and one retention tank per test cycle (Tank B1, B2, C1 or C2) (Figure 3.1).

The following steps are involved in the treatment of the test water in the BWMS (for definition and characterisation of test water, see Section 5.2):

1. A fraction of the test water (minimum 200 m^3 and maximum 250 m^3) contained in the source tank is transferred to the BWMS by pumping and treated here, after which it is transferred to one of the retention tanks (treated water).

2. Another fraction of the same test water (minimum 200 m^3 and maximum 250 m^3) is pumped directly into the control tank without passing the BWMS (control water). The control water serves as a control of BWMS performance.

3. Piping system and sample ports are cleaned (DHI SOP 30/1763).

For each BE test cycle, a minimum operational period of one (1) hour is required although this may be extended if the flow rate are lower than 200 m^3 per hour (as described in Section 5.4.5 in the ETV protocol /5/). The minimum operational period may decrease if the flow rate of the BWMS is higher than 200 m^3 per hour.

During ballasting, the flow, pressure, temperature, dissolved oxygen, pH, salinity, turbidity and water levels in the tanks are recorded automatically (DHI SOP 30/1764).

Samples are collected before and after first treatment by use of the relevant sample ports. Sampling is initiated when the flow rate has reached steady-state conditions, i.e. up to 5 minutes from start of operation (DHI SOPs 30/1738 and 30/1762). The samples are labelled according to procedures described in DHI SOP 30/1750.

5.1.3.2 Storage of treated and untreated test water

Following the treatment of the test water in the BWMS, the treated water is stored in the retention tank for at least five days ± 4 hours. The same storage time is applied for the control water.

5.1.3.3 Second treatment and discharge of test water

1. Treated water contained in the retention tank is pumped through the BWMS for second treatment, after which it is discharged into the harbour (treated discharge water)

2. Control water contained in the control tank is discharged into the harbour (control discharge water)

3. The retention tanks, piping system and sample ports are cleaned (DHI SOP 30/1763)

During de-ballasting, the flow, pressure, water temperature, dissolved oxygen, pH, salinity, turbidity and water levels in the tanks are recorded automatically (DHI SOP 30/1764).

Samples of the treated discharge water are collected by use of the sampling ports on the BWMS discharge line whereas samples of the control discharge water are collected by use of sampling ports on the test facility discharge line. Isokinetic sampling methodology with fixed sample volumes is applied according to principles described in MEPC.173(58) (G2) /9/.

5.1.4 Whole effluent toxicity testing

Whole effluent toxicity (WET) tests are conducted with treated discharge water and control discharge water in connection to BE test cycles. The WET testing includes chronic ecotoxicity tests covering three trophic levels (algae, crustaceans, fish). The WET tests are conducted in accordance with OECD Test Guidelines or ISO standards:

- Algae: OECD TG No. 201. Algal growth inhibition test (72 hours)
- Crustaceans: ISO/TC 147/SC5 ISO/CD 16778 (Draft 2012) ”Water quality - Calanoid copepod early-life stage test with *Acartia tonsa* (5 days)
- Crustaceans: OECD TG No. 211. Daphnia magna reproduction test (21 days)
- Fish: OECD TG No. 212. Fish, embryo sac fry test (10 days)

WET tests are included as part of the performance evaluation of BWMS in accordance with the requirements in Resolution MEPC.174(58) (IMO G8 guidelines) /2/ and Resolution MEPC.169(57) (IMO G9 guidelines) /3/. The WET tests are supplemented with chemical analyses of disinfection by-products in the case that the IMO G9 guidelines are applied.

5.1.5 Operation and maintenance testing

The operation and maintenance (O&M) testing of the BWMS shall distribute testing of a minimum treated volume of 10,000 m^3 amongst the BE test cycles. The minimum total volume for the O&M test cycles is achieved by conducting five O&M test cycles, each with a minimum treated volume of 2,000 m^3.

5.2 Challenge conditions in BE verification testing

5.2.1 Test water – water quality characteristics

Test water (equivalent to the term challenge water /4; 5/) means the inlet water as contained in the source tank just prior to treatment. In land-based tests, source water may be adjusted to achieve the required challenge conditions.

The natural concentrations of dissolved organic carbon (DOC), particulate organic carbon (POC) and total suspended solids (TSS) in the source water are analysed, after which the test water will be prepared to meet the water quality parameters in Table 5.2.

Table 5.2 Minimum water quality characteristics in compliance with the IMO G8 guidelines /2/ and the ETV protocol /5/

Parameter	Source water		
	Fresh (<1 PSU)	Brackish (10-20 PSU)	Marine (>32-36 PSU)
Dissolved organic carbon (DOC)	≥ 6 mg/L	≥ 6 mg/L	≥ 6 mg/L
Particulate organic carbon (POC)	>5 mg/L	≥ 5 mg/L	≥ 4 mg/L
Total suspended solid (TSS) Mineral materials (MM) ≥ 20 mg/L	>50 mg/L	≥ 50 mg/L	≥ 24 mg/L

If necessary to obtain the stated water quality parameters, the concentrations of DOC, POC and mineral materials (MM) are increased by additions of lignin sulphonate (DOC), starch (POC) and kaolin clay (MM) as described in DHI SOP 30/1737.

5.2.2 Test water – biological organism conditions

The natural densities of live organisms in the source water are analysed with reference to size classes, after which the test water is prepared to meet the biological parameters in Table 5.3.

Table 5.3 Minimum criteria for densities of live organisms in the test water according to the IMO G8 guidelines /2/ and the ETV protocol /5/

Organism size class	Total concentration	Diversity
≥50 µm	10^5 organisms/m^3	5 species across 3 phyla
≥10 µm and <50 µm	10^3 organisms/mL	5 species across 3 phyla
<10 µm	10^4/mL as culturable aerobic heterotrophic bacteria	Not applicable

If necessary in order to obtain the stated minimum criteria, the densities of live organisms are increased by addition of harvested indigenous organisms and/or cultured species as described in DHI SOP 30/1734. Addition of harvested and/or cultured species is recorded in the data logging. Heterotrophic bacteria are typically present in the source water in densities exceeding the minimum criteria described in Table 5.3.

The minimum densities of live organisms in the control discharge water are presented in Table 5.4.

Table 5.4 Criteria for densities of live organisms in the control discharge water according to the IMO G8 guidelines /2/ and the ETV protocol /5/

Organism size class	Total concentration
≥ 50 µm	100 organisms/m^3
≥10 µm and < 50 µm	100 organisms/mL
<10 µm	5 × 10^2/mL as culturable aerobic heterotrophic bacteria

5.3 Sampling and analysis plan

A complete description of the sampling and analyses is provided in the Test Plan.

5.4 Analytical procedures

The specific analyses applied in the land-based test and the associated DHI SOPs are described in Chapter 7.

6 Performance evaluation in shipboard test

6.1 Experimental design

6.1.1 Source water

The source water used for the testing shall be representative of harbour or coastal waters. The natural densities of live organisms in the source water are analysed with reference to size classes. The densities of live organisms in the size classes ≥50 µm and ≥10 µm to <50 µm (Table 6.1) must exceed 10 times the maximum permitted values in the IMO D-2 standard /1/, which is similar to the ballast water discharge standard /4/.

Table 6.1 Minimum criteria for densities of live organisms in the source water in shipboard test according to the IMO G8 guidelines /2/ and the U.S. Coast Guard Standards /4/

Organism size class	Total concentration	Diversity
≥50 µm	100 organisms/m³	No requirement
≥10 µm and <50 µm	100 organisms/mL	No requirement

6.1.2 Biological efficacy test cycles

The organisation of the BE test cycles and the associated trial periods and locations are described in the Test Plan.

6.2 Sampling and analysis plan

A complete description of the sampling and analyses is provided in the Test Plan.

6.3 Analytical procedures

The specific analyses applied in the shipboard test and the associated DHI SOPs are described in Chapter 7.

7 Data management, analyses and reporting

7.1 Data management

During the land-based or shipboard test information is recorded in relation to

- Personnel participating in cleaning and maintenance at the test facility and collection of samples

- Operational procedures and monitoring
- Sampling and analysis

The data are recorded in accordance with the data-logging procedures described in the respective SOPs. A complete overview of the DHI SOPs used for BWMS performance evaluation in land-based or shipboard tests is presented in Appendix B.

An Access-based database and the procedures described in DHI SOP 30/1750 are used for storage of data generated from the BE test cycles and for marking completed QC of individual data. This data-level QC is made with reference to data quality indicators (DQI) described in the SOPs.

All generated data and all other records and information relevant to the quality and integrity of the performance evaluation, including a copy of the database file(s) and original raw data, is retained in the archives of DHI for a period of five years after issue of the final report.

7.2 Analyses

7.2.1 Organism size class ≥50 µm

Compliance with the pass criterion in Chapter 9 will be verified by use of the direct count of organisms ≥50 µm in minimum dimension.

The concentrations of live organisms ≥50 µm in minimum dimension are determined by use of a stereo microscope and a counting chamber according to DHI SOP 30/1700. Viable organisms are enumerated by use of standard movement and response stimuli technique. The viable organisms are characterized according to broad taxonomic groups such as crustaceans (e.g. copepods), molluscs, rotifers, worms, etc.

7.2.2 Organism size class ≥10 µm and <50 µm

Compliance with the pass criterion in Chapter 9 will be verified by use of a combination of methods which shall be stated in the Test Plan.

Verification of compliance with the pass criterion for the size class ≥10 and <50 µm in minimum dimension is not straight-forward, because conventional vital staining is not directly applicable for determination of live organisms of all ballast water management technologies. E.g., ultra violet (UV) radiation may kill the organisms, but the esterase activity causing the response of the vital stains fluorescein diacetate (FDA) and chloromethylfluorescein diacetate (CMFDA) is not immediately inactivated, and this will result in "false positive" counts. Therefore, a combination of methods is used to determine the concentrations of live organisms in the size class ≥10 and <50 µm.

Examples:

For BWMS using active substance(s), compliance with the pass criterion in Chapter 9 may be verified by use of the direct count of FDA/CMFDA labelled organisms ≥10 and <50 µm in minimum dimension by use of an epifluorescence microscope.

For BWMS using filtration and e.g. UV radiation, deoxygenation, ultrazonication, cavitation etc., compliance with the pass criterion in Chapter 9 may be verified by use of the total of viable organisms determined by measuring algal re-growth using a most probable number (MPN) assay and enumeration of viable moving organisms ≥10 and <50 µm in minimum dimension that are not encompassed by the algal re-growth assay (i.e. FDA/CMFDA labelled organisms without chlorophyll).

To support the determination of concentrations of organisms in the ≥10 µm and <50 µm size class, a combination of the following analytical methods may be applied. The selection of methods shall be stated in the Test Plan:

Inverted microscopy (DHI SOP 30/1701). The concentrations of organisms and the presence of taxonomic groups in the inlet water are determined by inverted microscopy. Inverted microscopy is also be used to determine the taxonomic groups of algae that are able to grow under the conditions applied in the algal re-growth assay.

Vital staining with FDA and CMFDA (DHI SOP 30/1701). FDA and CMFDA are added to a subsample and, after incubation, the subsample is examined by use of a microscope under epifluorescence. Organisms labelled by either FDA or CMFDA are considered viable as described in DHI SOP 30/1701. Only FDA/CMFDA labelled moving organisms are included in the verification of compliance with the pass criterion.

Algal re-growth assay (DHI SOP 30/1704). Viable algae are quantified by measuring re-growth in a most probable number (MPN) assay. A dilution series is prepared by adding aliquots of subsample to test tubes with liquid medium. The test tubes are incubated for 14 days at ambient temperature. The concentrations of viable algae in the inlet water, control discharge water and treated discharge water are determined by measuring of the fluorescence in the test tubes before and after incubation according to DHI SOP 30/1704. The algal re-growth assay is considered to provide the most reliable results to be used for a performance evaluation of BWMS applying UV treatment as the method is directly linked to algal growth and, thus, indicative of the ability of the organisms to establish and reproduce in the environment. The algal re-growth assay includes planktonic algae without reference to size, and, thus, it is not limited to the ≥10 µm and <50 µm size class.

Algal primary production (DHI SOP 30/1702). The algal primary production is determined by measuring the ^{14}C fixed by photosynthesis. For each field replicate, $NaH^{14}CO_3$ (2 µCi) is added to two subsamples. These subsamples are incubated for approx. 75 min under light from a light panel at ambient temperature. After incubation, the samples are filtered onto Whatman GF/D filters. The filters are transferred to glass vials, and acid is added directly to the filters to release $^{14}CO_2$. The ^{14}C activity remaining in the algae on the filters after acidification is quantified by liquid scintillation counting according to DHI SOP 30/1702. The algal primary production assay includes planktonic algae without reference to size, and, thus, it is not limited to the ≥10 µm and <50 µm size class.

7.2.3 Organism size class <10 µm (bacteria)

The concentrations of heterotrophic aerobic bacteria are determined according to DHI SOP 30/1706 (ISO 6222). *E. coli* and enterococci are analysed according to DHI SOP 30/1708 using IDEXX Coliert kit and IDEXX Enterolert kit, respectively. *Vibrio cholerae* is analysed according to the method described in DHI SOP 30/1707 (ISO 21872).

7.2.4 Physical/chemical analyses

The physical/chemical analyses conducted according to DHI SOPs 30/1764 and 30/1766 include:

Land-based test:

- pH
- Turbidity
- Dissolved oxygen
- Ballast system pressure
- Ballast system flow rates
- UV-transmittance at 254 nm, 1 cm
- Water volume in retention tanks

Land-based and shipboard test:

- Temperature
- Salinity

- Dissolved organic carbon (DOC)
- Particulate organic carbon (POC)
- Total suspended solids (TSS)

8 Validity criteria

8.1 Land-based test validity criteria

According to the IMO G8 guidelines, Annex, Part 2, Section 2.3.36 /2/ and the ETV protocol, Section 5.4.7 /5/, a valid BE test cycle implies that:

- Operational parameters that demonstrate that the requisite volumes are transferred and sampled and manufacturer-specified flows, pressures or other validation criteria are maintained
- Water quality challenge conditions for uptake and discharge waters including toxicity sampling (if relevant) are met. Minimum water quality conditions are provided in Table 5.2
- Biological challenge conditions for ambient organism concentration and diversity are met. Minimum densities of live organisms are provided in Tables 5.3 and 5.4.

8.2 Shipboard test validity criteria

According to the IMO G8 guidelines, Annex, Part 2, Section 2.2.2.5 /2/ and the U.S. Coast Guard standards /4/, a valid BE test cycle implies that:

- The concentrations of viable organisms in the source water are at least 10 times higher than the maximum permitted values in the IMO D-2 standard /1/ (excepted from the requirements to bacteria), which is similar to the ballast water discharge standard /4/. Minimum densities of live organisms are provided in Table 6.1
- The concentrations of viable organisms in the control discharge water exceed the maximum permitted values in the IMO D-2 standard /1/ (excepted from the requirements to bacteria), which is similar to the ballast water discharge standard /4/.

9 Pass criteria

A valid BE test cycle, as part of either a land-based or a shipboard test, is regarded successful if it meets the performance standard for treated ballast water at discharge (IMO Regulation D-2 /1/ and United States Coast Guard /4/ (§151.2030)):

1. The average density of organisms larger than or equal to 50 µm in minimum diameter in the replicate samples shall be less than 10 viable organisms per m^3 at discharge
2. The average density of organisms smaller than 50 µm and larger than or equal to 10 µm in minimum diameter in the replicate samples shall be less than 10 viable organisms per mL at discharge
3. The average density of *Vibrio cholerae* (serotypes O1 and O139) shall be less than 1 colony forming unit (CFU) per 100 mL at discharge
4. The average density of *E. coli* in the replicate samples shall be less than 250 CFU per 100 mL at discharge

5. The average density of intestinal enterococci in the replicate samples shall be less than 100 CFU per 100 mL at discharge

10 Quality assurance and control

10.1 Quality assurance

The project is conducted in accordance with the principles of ISO 9001 by using the DHI Business Management System and the procedures in the QMP /6/.

The DHI quality manager is responsible for assigning a trained internal auditor from DHI's Quality Assurance Unit to each project in accordance with the procedures for internal audit in the DHI Business Management System (Section on Quality). The internal auditor shall not be involved in solving the specific project or in any project deliverables.

The DHI Business Management System (Section on Quality; Internal Audit) describes procedures for audit and evaluation and the process of periodic internal auditing of projects and activities including audit responsibilities and planning, auditor training and competences and audit reporting.

The DHI Business Management System (Section on Quality; Correction and Prevention) describes procedures for corrective actions, i.e. how deviations identified during operation and auditing are corrected and how future occurrence of the same deviations is prevented (preventive actions).

10.2 Quality control

Quality control of individual data, or data-level QC, of BWMS operational conditions, sampling and analyses is conducted with reference to data quality indicators (DQI) in the DHI SOPs by staff appointed for this task (see Section 2.2). The DQI include accuracy, precision, bias, representativeness, completeness, comparability, and sensitivity. The DQI and how they are monitored and evaluated are described in the relevant DHI SOPs.

Records of completed data-level QC are stored in an Access-based database (DHI SOP 30/1750), and a copy of the relevant database file(s) will be retained in the DHI archives for a period of five years after issue of the final report.

Quality control of the QAPP, DHI SOPs and all project proposals, deliverables and reports is conducted by management (see Section 2.2).

11 References

/1/ IMO. International Convention for the Control and Management of Ships' Ballast Water and Sediments. London. International Maritime Organization, 2004.

/2/ MEPC. Guidelines for Approval of Ballast Water Management Systems (G8). Resolution MEPC.174(58). Adopted 10th October 2008.

/3/ MEPC. Procedure for Approval of Ballast Water Management Systems that Make Use of Active Substances (G9). Resolution MEPC.169(57) Adopted 4th April 2008.

/4/ U.S. Coast Guard. Standards for Living Organisms in Ships' Ballast Water Discharged in U.S. Waters. Federal Register, Vol. 77, No. 57, March 23, 2012.

/5/ U.S. Environmental Protection Agency, Environmental Technology Verification Program. Generic Protocol for the Verification of Ballast Water Treatment Technology. EPA/600/R-10/146, September 2010.

/6/ Quality management plan. Performance Evaluation of Ballast Water Management Systems. DHI Denmark. Version 3.1. May 2012.

/7/ EN ISO/IEC 17025. General requirements for the competence of testing and calibration laboratories /ISO/IEC 17025, 2005.

/8/ OECD Principles of Good Laboratory Practice (as revised in 1997). Organisation for Economic Co-operation and Development (OECD), Paris. ENV/MC/CHEM (98)17.

/9/ Resolution MEPC.173(58). Adopted on 10 October 2008. Guidelines for approval of ballast water sampling (G2).

APPENDIX A

Certificate of compliance, ISO 9001 certificate, accreditation and GLP authorisation

COPY

Certificate no: **DS/I093222-A**
Page 1 of 1

Lloyd's Register Certificate of Compliance

Office: **Lloyd's Register EMEA**
Copenhagen Design Support Centre, Statutory Section
Strandvejen 104A, 2nd floor
DK-2900 Hellerup
Denmark

Date: **09 May 2012**

This certificate is issued to **DHI Ballast Water Centre, Denmark**

DHI Ballast Water Centre, Denmark

The Document(s) listed in paragraph 1 of the appendix have been examined for compliance with:

- Resolution MEPC.174(58), Annex part 2

and are found to comply from quality assurance and quality control aspects subject to the following:

1.1. It is required to maintain full and accurate log files in order to demonstrate correct quality measures

1.2. The Quality Assurance Project Plan is a project specific document and should as such be subject to review and commenting prior to each project start-up.

1.3. This design appraisal document is to be kept together with quality management plan.

1.4. Subject certificate is valid until 15 June 2015.

1. The documents listed below have been examined

Drawing No.	Rev.	Title	Status	Date
Date: 07 Sep 2011	**2.3**	**Quality Management Plan**	**B**	**09 May 2012**

2. The documents listed below have been considered together with the submitted documents in the appraisal

Drawing No.	Rev.	Title
11810704	**02**	**Quality Assurance Project Plan**

Appraisal Status Key

B Examined and found to comply with §2.2, Part 2 of the annex of IMO Resolution MEPC 174 (58)

Martin Schabert
Statutory Department
Copenhagen Design Support Centre
Surveyor to Lloyd's Register EMEA

LLOYD'S REGISTER EMEA
Lloyd's Register
M. Schabert
COPENHAGEN DESIGN SUPPORT CENTRE

A member of the Lloyd's Register Group

Lloyd's Register, its affiliates and subsidiaries and their respective officers, employees or agents are, individually and collectively, referred to in this clause as the 'Lloyd's Register Group'. The Lloyd's Register Group assumes no responsibility and shall not be liable to any person for any loss, damage or expense caused by reliance on the information or advice in this document or howsoever provided, unless that person has signed a contract with the relevant Lloyd's Register Group entity for the provision of this information or advice and in that case any responsibility or liability is exclusively on the terms and conditions set out in that contract.

Form 1124 (2005.02)

This is a copy of an electronic document. In the event of any conflict or ambiguity between the copy and the electronic document, which is retained and published by Lloyd's Register, the original electronic and certified version shall always prevail.

DNV BUSINESS ASSURANCE

MANAGEMENT SYSTEM CERTIFICATE

Certificate No. 109333-2012-AQ-DEN-DANAK

This is to certify that

DHI Group

has been found to conform to the management system standard:

DS/EN ISO 9001:2008

This certificate is valid for the following product or service ranges:

Consulting, software, research & development and laboratory testing, analysis & products within the area of water, environment & health

Locations included in the certification will appear in the appendix.

Place and date:

Hellerup, 2012-03-23

DET NORSKE VERITAS,
BUSINESS ASSURANCE, DANMARK A/S

This certificate is valid until:

2015-01-10

DANAK
SYSTEM Reg.nr. 5001

The audit has been performed under the supervision of:

Jan Carsten Schmidt
Lead Auditor

Jens Peter Høiseth
Managing Director

Lack of fulfilment of conditions as set out in the Certification Agreement may render this certificate invalid.

ACCREDITED UNIT: DET NORSKE VERITAS, BUSINESS ASSURANCE, DANMARK A/S, TUBORG PARKVEJ 8, 2., DK-2900, HELLERUP, DANMARK, TEL:+45 39 45 48 00, WWW.DNVBA.COM

DNV BUSINESS ASSURANCE

APPENDIX TO CERTIFICATE

This appendix refers to certificate no. 109333-2012-AQ-DEN-DANAK

DHI Group

Locations included in the certification are as follows:

Site Address	Scope:
Agern Allé 5 2970 Hørsholm, Denmark	Consulting, MIKE© by DHI Software Development, Sales & Support, Solutions Software Development, Research, Development & Innovation and Laboratory Analysis, Testing & Products
INCUBA Science Park, Gustav Wieds Vej 10 8000 Århus, Denmark	Consulting, Solutions Software Development and Research, Development & Innovation
Drakegatan 6, 412 50 Göteborg, Sweden	Consulting, MIKE© by DHI Software Sales & Support
Kyrkogatan 3, 222 22 Lund, Sweden	Consulting, MIKE© by DHI Software Sales & Support
Svartmangatan 18, 111 29 Stockholm, Sweden	Consulting, MIKE© by DHI Software Sales & Support
Honnörsgatan 16, Box 3287, 350 53 Växjö, Sweden	Consulting, MIKE© by DHI Software Sales & Support

This certificate is valid until:

2015-01-10

The audit has been performed under the supervision of:

Jan Carsten Schmidt
Lead Auditor

DANAK
SYSTEM Reg.nr. 5001

Place and date:

Hellerup, 2012-03-23

DET NORSKE VERITAS,
BUSINESS ASSURANCE, DANMARK A/S

Jens Peter Høiseth
Managing Director

Lack of fulfilment of conditions as set out in the Certification Agreement may render this certificate invalid.

ACCREDITED UNIT: DET NORSKE VERITAS, BUSINESS ASSURANCE, DANMARK A/S, TUBORG PARKVEJ 8, 2., DK-2900, HELLERUP, DANMARK, TEL:+45 39 45 48 00, WWW.DNVBA.COM

COPY DANAK

Accreditation to testing

Company:	**DHI**
	Agern Allé 5 **DK-2970 Hørsholm**
Registration number:	26
Valid:	**04-07-2011 to 31-07-2015**

Scope:

Testing

Product

- **Biological items for testing**
- **Chemicals, chemical products, cosmetics, fertilizers, paints**
- **Environmental samples: Air, water, soil, waste**
- **Construction products**

Test Type

- **Biological, biochemical testing**
- **Chemical testing, Analytical chemical testing**
- **Radiochemistry, radiation**
- **Sampling, laboratories accredited for sampling**

Testing is performed according to the current list of test methods approved by DANAK.

The company complies with the criteria in EN ISO/IEC 17025:2005 – General requirements for the competence of testing and calibration laboratories and demonstrates technical competence for the defined scope and the operation of a quality management system (refer joint ISO-ILAC-IAF Communiqué dated January 2009, www.danak.dk).

Issued July 4th 2011

Jesper Høy / **Kirsten Jebjerg Andersen**

In case of any disputes, the Document in Danish language shall have priority

Den Danske Akkrediterings- og Metrologifond

COPY

DANAK

GOOD LABORATORY PRACTICE

STATEMENT OF COMPLIANCE

Laboratory inspection and study audits for compliance with the OECD Principles for Good Laboratory Practice were carried out at

Laboratory: DHI

on

Dates: 21st and 22nd October 2011

The laboratory inspection and study audits have been carried out in accordance with the regulation settled in Order No. 906 of 14th September 2009 from the Danish Ministry of Environment. The laboratory has been monitored for GLP Compliance within the following scope:

Type of products:

- *Industrial chemicals*
- *Pesticides*
- *Biocides*

Type of tests:

- *Environmental toxicity studies on aquatic and terrestrial organisms.*
- *Studies of behaviour in water, soil and air, bioaccumulation*

The laboratory was found to be operating in compliance with the OECD Principles of Good Laboratory Practice.

Date: 08 August 2012

Jesper Høy
Managing director, DANAK

Kirsten Jebjerg Andersen
GLP inspector, DANAK

Den Danske Akkrediterings- og Metrologifond

APPENDIX B

Overview of DHI SOPs

SUBJECT/SUBSUBJECT	DHI SOP NO.
ANALYTICAL METHOD DETERMINATION OF VIABLE ORGANISMS ≥50 µm	30/1700
ANALYTICAL METHOD DETERMINATION OF VIABLE ORGANISMS ≥10 µm AND < 50 µm	30/1701
ANALYTICAL METHOD DETERMINATION OF PRIMARY PRODUCTION OF MICROALGAE	30/1702
ANALYTICAL METHOD DETERMINATION OF VIABLE ALGAE BY RE-GROWTH ASSAY	30/1704
MICROBIOLOGICAL TESTS DETERMINATION OF TOTAL NUMBER OF BACTERIA BY EPIFLUORESCENCE MICROSCOPY	30/1705
MICROBIOLOGICAL TESTS DETERMINATION OF HETEROTROPHIC PLATE COUNT	30/1706
MICROBIOLOGICAL TESTS DETERMINATION OF *VIBRIO CHOLERAE* IN WATER	30/1707
MICROBIOLOGICAL TESTS DETERMINATION OF TOTAL COLIFORM, E.COLI AND ENTEROCOCCI BY Colilert*-18, Enterolert-E or Bio-Rad MUG/MUD kit	30/1708
MEASUREMENT METHOD TRO MEASUREMENT IN WATER	30/1732
HARVESTING, CULTURING AND ADDITION OF ORGANISMS	30/1734
COLLECTION OF SEAWATER	30/1735
COLLECTION OF FRESH WATER	30/1736
CRITERIA FOR TEST WATER ADDITION OF DOC, POC, MM AND BRINE	30/1737
SAMPLING PREPARATION, SUBSAMPLING AND TRANSPORTATION OF SAMPLES	30/1738
DATABASE SAMPLES, LABELS AND DATA SHEETS	30/1750
OPERATION OF THE DHI MTEF	30/1762
CLEANING RETENTION TANKS; PIPINGS AND OTHER EQUIPMENT AT TEST SITE	30/1763
MEASUREMENT METHOD ON-LINE MONITORING OF PRESSURE, TEMPERATURE, FLOW RATES AND QUALITY PARAMETERS AT TEST SITE	30/1764
MEASUREMENT METHOD FLUORESCENCE	30/1765
MEASUREMENT METHOD TURBIDITY	30/1766
DHI MTEF HEALTH AND SAFETY	30/1767
MEASUREMENT METHOD DETERMINATION OF TSS	30/1768
MEASUREMENT METHOD DETERMINATION OF DOC AND POC	30/1769
MEASUREMENT METHOD DETERMINATION OF TRANSMITTANCE	30/1770

APPENDIX B

Data logging format for the shipboard testing with PureBallast 3.0

Table B.1.1 Test cycle data logging; treated water

Subject	Data
Client treatment system	
Client specified parameters (e.g. number of treatment reactors/units, filter model, filter mesh size, etc.)*	
Salinity (PSU)	
Ballast tank No.	
Test cycle No.	
Location for ballast (port name and terminal or coordinates)	
DHI personnel on-board; ballast	
Date and time ballast start	
Date and time ballast stop	
Treated volume during ballast	
Flow rate during ballast (average)	
Power consumption during ballast	
UV intensity during ballast	
Location for de-ballast (port name and terminal or coordinates)	
DHI personnel on-board; de-ballast	
Date and time de-ballast start	
Date and time de-ballast stop	
Treated volume during de-ballast	
Flow rate during de-ballast (average)	
Power consumption during ballast	
UV intensity	
General comments/operational issues	

* Information on manufacturer-specified parameters and power consumption data provided by the client

Table B.1.2 Test cycle data logging; control water

Subject	Data
Salinity (PSU)	
Ballast tank No.	
Location for ballast (port name and terminal or coordinates)	
Date and time ballast start	
Date and time ballast stop	
Volume during ballast	
Flow rate during ballast (average)	
Location for de-ballast (port name and terminal or coordinates)	
Date and time de-ballast start	
Date and time de-ballast stop	
Volume during discharge	
Flow rate during discharge (average)	
General comments/operational issues	

APPENDIX C

Description of ship and technology
as provided by the manufacturer

AlfaWall
A company owned by Alfa Laval and Wallenius Water

Subject	Ref. No	Version	Security	Pag
Shipboard test PureBallast 3.0 Description of ship and technology MV Turandot	AW12-125	2		1/4

Department	Date	Issued by	Approved by
	2012-11-02	Per Borin	

1. Ship and shipboard installation

The test will be conducted at Wallenius Marines car carrier M/V Turandot.

Configuration of the test tanks with pipes, valves and devices is shown in enclosed drawing 10066 "Turandot ballast piping schematic" and 9005280 "Flow chart PB 3.0"

The vessel

Vessel:	Turandot
Owner:	Wallenius Lines
Management:	Wallenius marine
Flag:	Singapore
Class:	LR
Ship type:	PCTC
Length (m):	199,1
Beam (m):	32,3
Draft (m):	11
Deadweight (m/t):	22598
Gross tonnage	55598
Delivered:	1995

2 The PureBallast ballast water management system

2.1 Process description

A process description with the chemical features and the discharge characteristics of the Wallenius AOT Process is found in System manual – PureBallast 3.0 Flow 1000, Ch.2 "System description".

2.2 System and component description

The PureBallast system of Alfa Laval is a complete ballast water treatment system composing of three main component ballast water treatment system; 1) a 50 µm filter for removal of larger particles and organisms, 2) the Wallenius AOT (Advanced Oxidation Technology) Module, a patented treatment system using the synergetic effects of *in situ* produced free radicals and direct photo-radiation to inactivate microbes and 3) control and auxiliary equipment including sampling points to control water flows and measure different alarm levels during operation as well as to take samples during operation and testing.

The system and its components are further described in System manual – PureBallast 3.0 Flow 1000, Ch.2 "System description".

2.3 Physical properties of the PureBallast test equipment

The test equipment is a complete PureBallast system with a flow rate of max 1000 m^3/h. The system has one pre-filter and one Wallenius AOT units with capacity of 1000 m^3/h and a CIP-unit for cleaning the AOT units.

2.4 Running test cycles

The following tanks will be used during the shipboard test:

Treated water:

No.4 DB W.B. TK (C)	866.1 m^3
No.4 DB W.B. TK (P)	~280 m^3
No.4 DB W.B. TK (S)	~280 m^3
	~1426 m^3

Control water:

No.1 DB W.B. TK (C)	~700 m^3
	~700 m^3

The different water transfers between tanks via the PureBallast system during a test cycle including the control is shown in Figure 5. One test cycle involves consecutive treatment of test water during ballasting by the 50 µm filter unit and the Wallenius AOT Module of the PureBallast system (reed lines) transferring the test water from the sea to a tank for treated water (Figure 5, upper left). A control cycle (red lines) is run by ballasting seawater to a tank for control water using the pump of the PureBallast system, but in by-pass of the treatment units (Figure 5, upper right). The deballasting of control water is also conducted by pumping only, without any treatment (Figure 5, lower left). A second treatment of the treated water is conducted by the Wallenius AOT unit during deballasting (Figure 5, lower right).

One test cycle involves;

1. Ballast treated water; Sea → Filter → AOT → Treated tank (figure upper left)
2. Ballast control water; Sea → Control tank (Figure upper right)
3. Deballast control water; Control tank → Sea (Figure lower left)
4. Deballast treated water; Treated tank→ AOT - Sea (Figure lower right)

There are no requirements for retention time between ballast and deballast operation for shipboard testing.

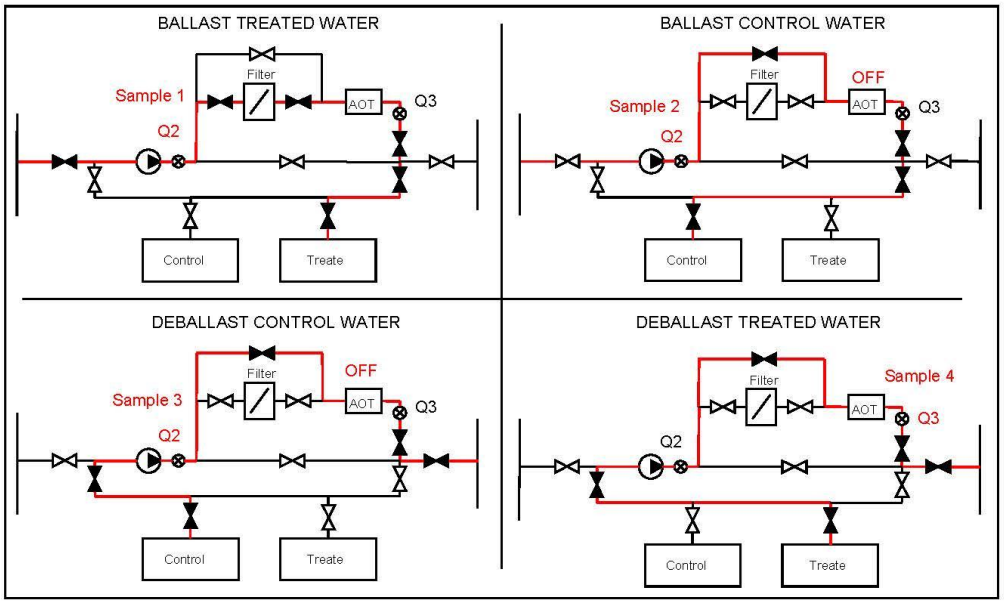

Ballast treated water (both pumps)

Ref.drawing 10066 "Turandot ballast piping schematic", 9005280 "Flow chart PB 3.0" and AW12-134 "PID Turandot".

Setting of ship controlled valves before starting PureBallast "Ballast cycle":

Pump (S): BA027, BA044, V/V No.1
Pump (P): BA025, BA043, BA028
New valve No.3, BA021, BA022, BA050
BA016 - No.4 DB W.B. TK (P)
BA034 - No.4 DB W.B. TK (C)
BA018 - No.4 DB W.B. TK (S)

Ballast control water (both pumps)

Ref.drawing 10066 "Turandot ballast piping schematic", 9005280 "Flow chart PB 3.0" and AW12-134 "PID Turandot".

To be able to use sampling point Q201.1 the control water must be led through the treatment system (filter by passed and AOT reactor off, has to be set in PureBallast in manual mode).

Pump (S): BA027, BA044, V/V No.1
Pump (P): BA025, BA043, BA028
PureBallast manual mode: V201-9, V201-19, V201-20, V201-8
V/V No. 3, BA021, BA022, BA050
BA002 - No.1 DB W.B. TK (C)

Deballast control water (both pumps)

Ref.drawing 10066 "Turandot ballast piping schematic", 9005280 "Flow chart PB 3.0" and AW12-134 "PID Turandot".

To be able to use sampling point Q201.1 the control water must be led through the treatment system (filter by passed and AOT reactor off, has to be set in PureBallast in manual mode).

BA002 - No.1 DB W.B. TK (C)
Pump (S): BA050, BA026, BA044, V/V No.1
Pump (P): BA021, BA024, BA043, BA028
PureBallast manual mode: V201-9, V201-19, V201-20, V201-8
BA030, BA031

Deballast treated water (both pumps)

Ref.drawing 10066 "Turandot ballast piping schematic", 9005280 "Flow chart PB 3.0" and AW12-134 "PID Turandot".

Setting of ship controlled valves before starting PureBallast "Ballast cycle":
BA016 - No.4 DB W.B. TK (P)
BA034 - No.4 DB W.B. TK (C)
BA018 - No.4 DB W.B. TK (S)
Pump (S): BA050, BA026, BA044, BA029
Pump (P): BA022, BA021, BA024, BA043, BA028, V/V No.2
BA030, BA031

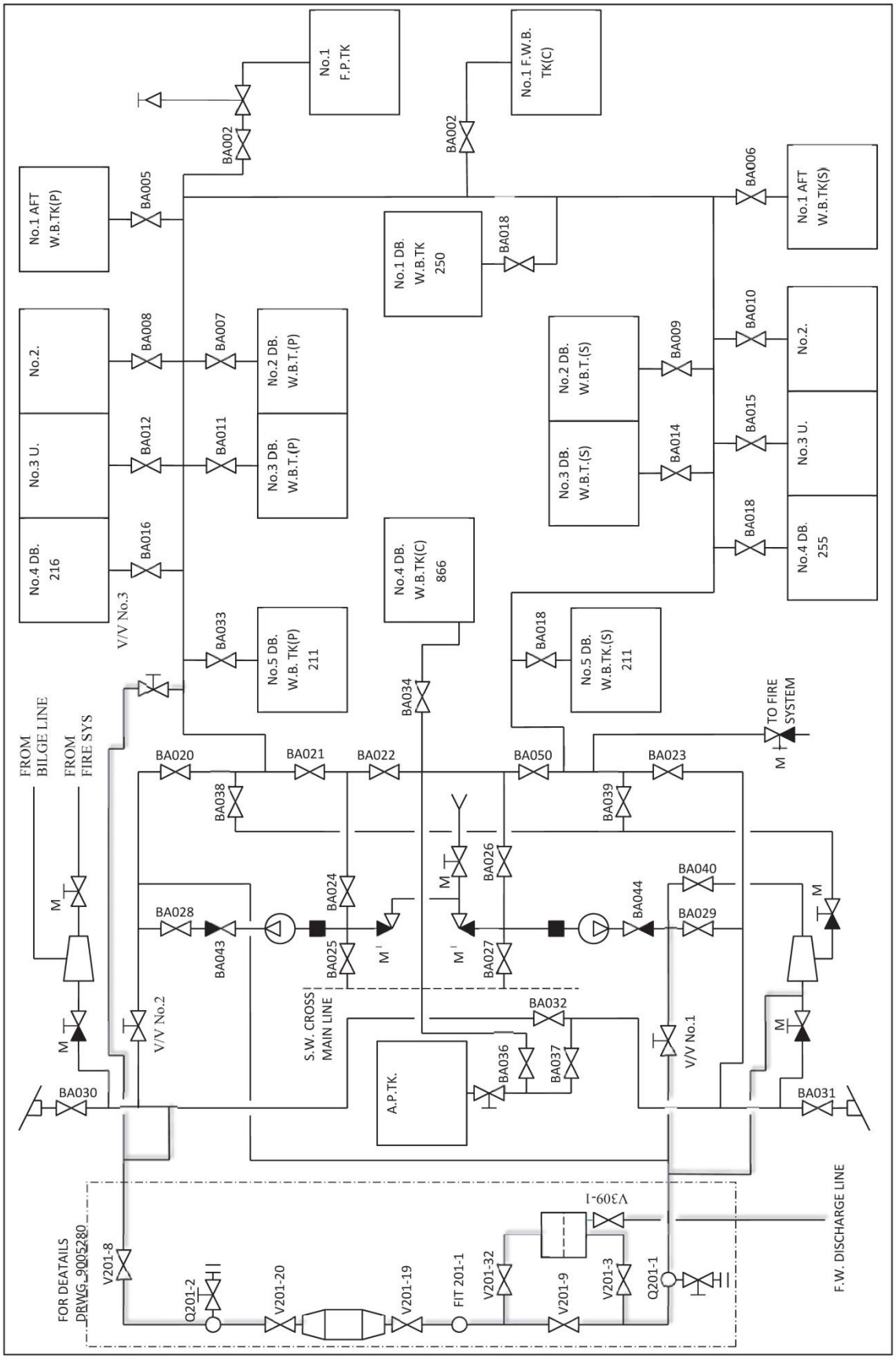

AW12-134 rev.1

PID Turandot

2012-12-05

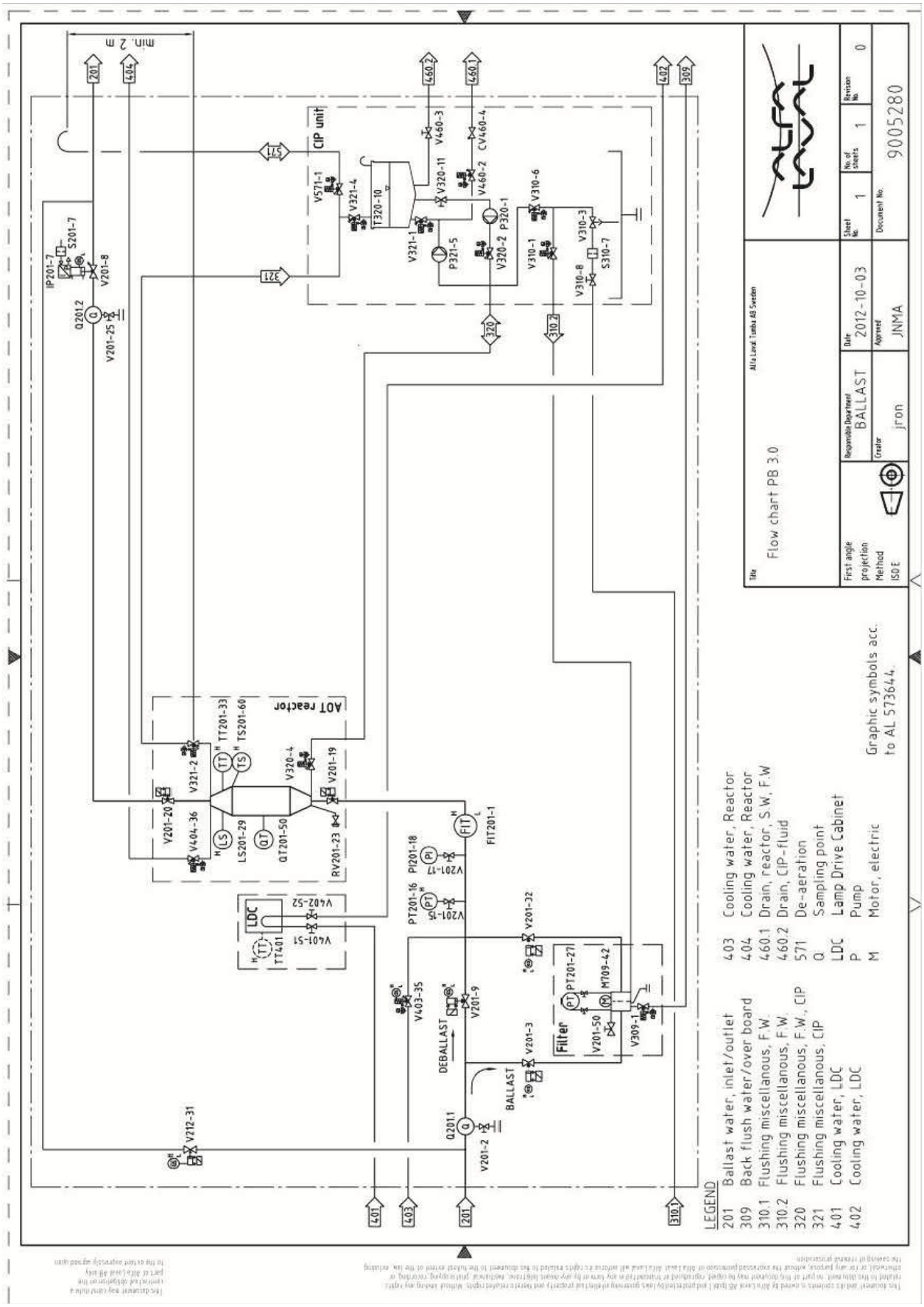
Min. 2 m
CIP unit
AOT reactor
LDC
Filter
DEBALLAST
BALLAST
Flow chart PB 3.0
Alfa Laval Tanks AB Sweden
Responsible Department
BALLAST
Date
2012-10-03
Approved
JNMA
Creator
jron
Sheet No.
1
No. of sheets
1
Revision No.
0
Document No.
9005280
First angle projection
Method ISO E
Graphic symbols acc. to AL 573644.
LEGEND
201 Ballast water, inlet/outlet
309 Back flush water/over board
310.1 Flushing miscellanous, F.W.
310.2 Flushing miscellanous, F.W.
320 Flushing miscellanous, F.W., CIP
321 Flushing miscellanous, CIP
401 Cooling water, LDC
402 Cooling water, LDC
403 Cooling water, Reactor
404 Cooling water, Reactor
460.1 Drain, reactor, S.W, F.W
460.2 Drain, CIP-fluid
571 De-aeration
Q Sampling point
LDC Lamp Drive Cabinet
P Pump
M Motor, electric

DEVIATION No. 1

Test plan

Biological efficacy performance evaluation of Ballast Water Management Systems in shipboard test. PureBallast 3.0. December 2012.

2012.12.29 – 2013.10.13

Description of Deviation

Organisms ≥10 and <50 µm analysis method for control discharge water
Enumeration by CMFDA/FDA microscopic analysis was applied to confirm that the validity criterion for the concentration of organisms ≥10 and <50 µm in the control discharge water was fulfilled, instead of inverted microscopy enumeration of Lugol's solution preserved samples.

Reason for Deviation

Error in Test Plan.

Impact of Deviation

None.

Preventive action

Not relevant.

Edina Chua

Project manager

2013.11.28
Date

Copy to be sent to the client, the Certification Body and the DHI Quality Assurance Unit.

AMENDMENT No. 1

Test Plan

Biological efficacy performance evaluation of Ballast Water Management Systems in shipboard test. PureBallast 3.0. December 2012.

2013.01.08

Amendment comments

Chapter 10 Time schedule
The first campaign (Campaign 1) with PureBallast 3.0 was conducted on the 29th of December 2012. Campaign 1 was conducted on route from Bremerhaven, Germany to Zeebrugge, Belgium.

Appendix B Data logging format for the shipboard testing with PureBallast 3.0
Weather conditions will be included in the DHI test cycle data logging procedures. Weather conditions were recorded during campaign 1.

Appendix C Description of ship and technology as provided by the manufacturer
The comments by DNV to Appendix C 'Description of ship and technology as provided by the manufacturer' will be addressed by AlfaWall AB in a separate document.

Reason for Amendment

Amendment with details on locations and date for Campaign 1. Additional information on weather conditions requested by DNV included in amendment.

Impact of Amendment

Information regarding weather conditions included in the DHI test cycle data logging as requested by DNV.

Preventive action

Not relevant.

Michael Andersen

Michael Andersen

Project manager

2013.01.08
Date

Copy to be sent to the client, the Certification Body and the DHI Quality Assurance Unit.

AMENDMENT No. 2

Test plan

Biological efficacy performance evaluation of Ballast Water Management Systems in shipboard test. PureBallast 3.0. December 2012.

2013.02.28

Amendment comments

Chapter 10 Time schedule
The second campaign (Campaign 2) with PureBallast 3.0 will include one test cycle (test cycle No. 2). Campaign 2 is scheduled to be conducted between Bremerhaven, Germany, and Zeebrugge, Belgium, in the period from 11 to 17 March 2013.

Reason for Amendment

Planned amendment with details on locations and dates for Campaign 2.

Impact of Amendment

As DNV did not accept shipboard test cycle No. 1, conducted during Campaign 1 in December 2012, as initiation of the shipboard testing period of operation of at least six months, the shipboard testing period of at least six months is planned to start between 11 and 17 March 2013.

Preventive action

Not relevant.

Michael Andersen

Michael Andersen

Project manager

2013.02.28
Date

Copy to be sent to the client, the Certification Body and the DHI Quality Assurance Unit.

AMENDMENT No. 3

Test plan

Biological efficacy performance evaluation of Ballast Water Management Systems in shipboard test. PureBallast 3.0. December 2012.

2013.04.12

Amendment comments

Chapter 10 Time schedule
The third campaign (Campaign 3) with PureBallast 3.0 will include two test cycles (test cycles No. 3 and 4). Campaign 3 is scheduled to be conducted between Bremerhaven, Germany, Gothenburg, Sweden and Zeebrugge, Belgium, in the period from 16 to 21 April 2013.

Reason for Amendment

Planned amendment with details on locations and dates for Campaign 3.

Impact of Amendment

None.

Preventive action

Not relevant.

Michael Andersen

Michael Andersen

Project manager

2013.04.12
Date

Copy to be sent to the client, the Certification Body and the DHI Quality Assurance Unit.

AMENDMENT No. 4

Test plan

Biological efficacy performance evaluation of Ballast Water Management Systems in shipboard test. PureBallast 3.0. December 2012.

2013.09.06

Amendment comments

Chapter 10 Time schedule
A fourth campaign (Campaign 4) with PureBallast 3.0 will be conducted, and will include one test cycle (test cycle no. 5). Campaign 4 is scheduled to be conducted between Bremerhaven, Germany, and Zeebrugge, Belgium, in the period from 11 to 14 September 2013.

Reason for Amendment

Amendment with details on locations and dates for Campaign 4.

Impact of Amendment

None.

Preventive action

Not relevant.

Michael Andersen

Michael Andersen

Project manager

2013.09.06
Date

Copy to be sent to the client, the Certification Body and the DHI Quality Assurance Unit.

AMENDMENT No. 5

Test plan

Biological efficacy performance evaluation of Ballast Water Management Systems in shipboard test. PureBallast 3.0. December 2012.

2013.10.01

Amendment comments

Chapter 10 Time schedule
A fifth campaign (Campaign 5) with PureBallast 3.0 will be conducted, and will include one test cycle (test cycle no. 6). Campaign 5 is scheduled to be conducted between Bremerhaven, Germany, and Gothenburg, Sweden, in the period from 15 to 17 October 2013.

Reason for Amendment

Additional test cycle requested by client.

Impact of Amendment

None.

Preventive action

Not relevant.

Edina Chua

Project manager

2013.10.01
Date

Copy to be sent to the client, the Certification Body and the DHI Quality Assurance Unit.

AMENDMENT No. 6

Test plan

Biological efficacy performance evaluation of Ballast Water Management Systems in shipboard test. PureBallast 3.0. December 2012.

2014.02.04

Amendment comments

Chapter 2 Project organisation and personnel responsibilities
From September to December 2013 Edina Chua was assigned the project management responsibilities specified in the test plan. It was a planned change in the project organisation that Edina Chua was appointed project manager instead of Michael Andersen in this period.

Reason for Amendment

Change of project manager.

Impact of Amendment

None.

Preventive action

Not relevant.

Michael Andersen

Michael Andersen

Project manager

2014.02.04
Date

Copy to be sent to the client, the Certification Body and the DHI Quality Assurance Unit.

APPENDIX B

Adjustments, service and maintenance log for PureBallast 3.0 during shipboard testing

Subject	Ref. No	Version	Security	Page
Adjustments, service and maintenance log for PureBallast 3.0 during shipboard testing	AW13-140	2	-	1/4

Department	Date	Issued by
AW	2013-12-02	Per Borin

Date	Adjustments and service log
12.12.28	**Pre check of system and installation** AL [Per Borin], DNV[Andreas Cappelen], DHI [Camilla Hedberg, Mette Albrektsen]
12.12.29	**Shipboard test # 1** AL [Per Borin], DNV[Andreas Cappelen], DHI [Camilla Hedberg, Mette Albrektsen] • Failed test, to low flow during test due to failing diesel-generator on vessel • Mimic on vessel ISCS does not show the actual piping, several valves and piping is missing. To get an overview of actual setting of the ballast water system requires both vessel ISCS display, a drawing on actual piping and knowledge on the setting on new hand maneuverer valves (V/V no.1, 2 and 3).
13.02.19-22	**Additional installation and Crew training** AL [Ramin Nikzam] • Installed new remote panel in machine control room (MCR) • Connected GPS signal to BWMS • Trained the crew and cleaned/filled dedicated test tanks with treated water • Experienced problems with filter and ignition of UV lamps and the filter back-flush procedure was jammed, back flush valve opened and the back flush motor were running continuously.
13.02.23	**Exchange Lamp Power Supply** AL [Ramin Nikzam, Per Borin] • Installed new Lamp Power Supplies (all 16 LPS units) Problem with LPS communication after installation of new LPSs
13.02.24	**Update PLC software** AL [Per Borin] • Updated PLC software Tried to start with new software; Problem with LPS communication remained W160 and W161. Reinstalled “old LPS” Problem with LPS communication remained W160 and W161.
13.02.25-26	**Problem with signal exchange Hydac filter-PLC** AL [Per Borin, Jonas Berggren], Hydac [Thorsten Hoffman, Anton Werner, Thorsten Laval] • System lock up observed 13.02.19-22; filter blocked in back flush cycle leaving the back flush valve in open position. This happened randomly during heavy filter load. **Problem**: If PureBallast immediately try to initialize a second back-flush this can cause a deadlock in the Hydac PLC since it was not ready to receive another order. The Hydac filter software was **updated** with a timer (delay) that makes it possible for the Hydac PLC to receive multiple start commands without ending up in a deadlock • New firmware installed Hydac filter; Revision 3798172_A. • Tested new firmware together with Hydac in Bremerhaven. • The PureBallast software was found to trigger two backflush sequences after each other instead of just one. This issue was corrected • New software installed in PLC

Date	Adjustments and service log
	LPS unit exchange • All LPS units were again replaced with revision 4 units, F.W. 121. This firmware release has an extended lamp ignition sequence. Ignition for 60 s-30 s rest – 60 s ignition – then alarm broken lamp.. The system was then tested both in manual and automatic mode. The lamps were lighting up very fast at water temperatures around 10 degrees. At temperatures as low as 3 degrees the lamps were slightly slower but still started (which they did not before the LPS units were replaced). At one point the communication to a number of LPS units was lost. This is most likely related to the previously noted cabling issues. The LPS serial link had to be connected straight to the PLC input (CS1030), which means that there is currently no link to the main circuit breaker. • The second remote panel (in the Machine Control Room) was upgraded and connected to the network. The remote panel in the ships office was not working properly when we arrived to Turandot. Worked OK after reset. • Communication problem was due to wrongly connected signal cable after first LPS change 13.02.23
13.03.11	**Installation Dupondt cable emulator** AL [Per Borin, Peter Sahlen] • Randomly slow UV lamp ignition observed by crew (especially in cold water), ignition delay up to over 1 minute. • Installed Dupondt cable emulator to improve ignition of lamps (removed 4µS zero voltage period, which caused lamp unlit). • Tested the system after installing cable emulator. All lamps started within 5 seconds.
13.03.13	**Shipboard test #2 – First approved shipboard test** AL [Per Borin], DNV [Tone Fiskeseth], DHI [Michael Andersen, Mette Albrektsen] • Mimic on vessel ISCS is now updated and display actual piping including the BWMS. The BWMS and valve V1, V2 and V3 are only “dead” symbols though. • Parameter p304 “Required pressure to start back-flush” was adjusted during the treated inlet test #2 from default value 2,5 bar to 1,9 bar in order to maintain system flow rate during back flush cycle. This parameter defines the setpoint for desired system pressure during back-flush, control valve V201-8 throttle to create this pressure.

13.04.15	**Installation new firmware LPS, Update PLC software**
	AL [Mattias Olsson, Peter Sahlen]
	• Installed new firmware Lamp Power Supply, F.W. 131, new features includes activation of internal:
	  o temp sensors
	  o short circuit test
	  o ground fault test
	  o green Modbus blink frequency modified
	• Updated the system according to production adjustments:
	  o Changed temp transmitter TT201-33 from pt100 to 2xpt1000 which gives a more accurate temp reading (with a pt100 transmitter the cable length affected the reading).
	  o Safety relay adapted to the new pt1000 transmitter.
	  o Installed status switch on Valve 403-35, indicating its position.
	• Updated PLC software
	  o Activated accumulation treated volume during back-flush cycle

13.04.17	**Shipboard test # 3** AL [Per Borin], DHI [Michael Andersen, Camilla Hedberg, Frank Leck] • Lamp ignition still not stable
13.04.18	**Shipboard test # 4** AL [Per Borin], DHI [Michael Andersen, Camilla Hedberg, Frank Leck] • During start of system it was observed that Lamp Power Supply (LPS) was not stable; randomly a single LPS stopped during start-up of the system. The LPS returned to idle mode during start-up phase without stop command which occurred randomly. Short circuit/ground fault detection also occurred randomly without any cause. This was observed by crew and during test 3 and 4.

Date	Adjustments and service log
13.04.19	**Software debugging LPS** AL [Per Borin, Peter Sahlen, Frida Norlin] • Test started the system several times and it was found that LPS returned to idle mode during start-up phase without stop command with an approximately frequency at every 1/50 lamp start attempts. The new internal LPS functions #short circuit test and #ground fault test caused the random fault, they are too sensitive adjusted. • Decided to continue test home and adjust firmware after verification in lab. • In extended lab tests it was later found that if internal current dropped below 1 Amp when LPS boost regulation was enabled the LPS returned to idle mode. This was previously a safety caution during the development phase of to stop LPS if UV-lamp unlit. The reason for this is that when several LPS enters boost stage at same time a micro current drop can occur. • An average calculation of the current was implemented and as well the threshold was lowered to 0,7 Amp.
3.05.21-22	**Installation new firmware LPS** AL [Per Borin, Peter Sahlen] • Installed new firmware Lamp Power Supply, Revision No. 137 • Tested new Firmware with no single LPS faulting out of 640 LPS start-ups it can be concluded that the firmware modification have had a positive impact.
13.08.26	**System Error during operation** • C/O reported failing BWMS system; system closed down during start cycle; LS201-26 indicates no water in reactor during start of system and start of CIP. Crew not able to run the BWMS; the following alarm are displayed; o A77 Error on all operating AOT;s: Automatic stop o W116 AOT(1):AOT Fluid Level signal missing (LS201-29) A faulty sensor (LS201-29) is probably the cause, no spare on board. • Ship take in untreated ballast water
13.09.11-12	**Troubleshooting faulty level sensor LS201-29** AL [Per Borin] • The level sensor LS201-29 did not cause the system error [13.08.26] but a faulty safety relay -KS3 in the LDC cabinet. Changed the relay which solved the problem. This fault was not described in PureBallast system manual Ch.5. Alarms and fault finding. To be corrected. • Kongsberg has programmed valve combination resulting in BWMS by-pass • Vessel scheduled changed yesterday, they will leave Bremerhaven tonight at 2300. Yard installing new remote controlled valves (V01 and V02) which prevents us from running the test. Installation of valves not ready until late.
13.09.13	**Shipboard test # 5** AL [Per Borin], DHI [Camilla Hedberg, Mette Albrektsen] • System alarm W306 “Filter differential pressure too high, >1 bar” appeared during treated inlet test #5. The diff pressure over the filter raised over 1 bar due to heavy load on filter. This is a warning for the operator to observe the filter performance and to reduce system flow if pressure continues to rise. The filter candles can withstand 3 bar (in software release 3.0.5 it is possible to set a higher warning pressure)
13.10.02	**Exchanged DI module A4 in LDC cabinet** AL [Per Borin] • The Ex version of PureBallast 3.0 requires an extended DI module (with 16 bit) and it was decided to have that module as standard also in the standard version.
13.10.03	**Update PLC and HMI software** AL [Per Borin] • Updated PLC and HMI software; V3.0.2 • Log file from new PLC software not tagged with GPS data (parameter must be activated in software)

Date	Adjustments and service log
13.10.09	**Inspection of filter (inside) and cleaning of filter elements** AL [Per Borin] • Opened filter and took out the filter candles. • Inspected inside of filter, inside components and filter elements. No corrosion or damages found though scaling could be seen on the filter mesh. • Cleaned filter candles in warm CIP liquid for about 1-2 hours and washed them afterwards with clean warm water with very good result. • Reassembled the filter again with the new cleaned filter candles.
13.10.14	**The hand-operated valve V/V No. 3 was changed to a remote controlled valve** • Yard installed remote controlled and monitored valve V/V No.3
13.10.15	**Shipboard test # 6 (intake)** AL [Per Borin], DHI [Camilla Hedberg, Jörgen Hansen], DNV [Marte Rusten] • Alarm W140 ”CIP schedule timer elapsed Start CIP!” appeared during ship board test #6. CIP had not been performed within parameter set time limit after last operation. It can have a negative impact on efficiency but due to time constraints, it could not be done before the test. The reason was the work that was performed the day before. CIP cycle was conducted after the test was completed.
13.10.16	**Shipboard test # 6 (Discharge)** AL [Per Borin], DHI [Camilla Hedberg, Jörgen Hansen], DNV [Marte Rusten]

APPENDIX C

On-board testing documentation

Report

Subject	Ref. No	Version	Security	Page
Onboard testing documentation MV Turandot - trial period	AW13-141	4	-	1/1

Department	Date	Issued by
	2013-12-02	PBN

Objective

1 Ballast Water System MV Turandot

1.1 Data

Flag:	Singapore
Class:	LR
Ship type:	PCTC
Length (m):	199,1
Beam (m):	32,3
Draft (m):	11
Deadweight (m/t):	22598
Gross tonnage	55598
Delivered:	1995
Ballast pump capacity:	2 x 500m3/h
Total ballast capacity:	8207 MT

1.2 Installation

The ship MV Turandot was retrofitted with PureBallast 3.0 BWMS flow 1000 (TRC 1000 m^3/h) in autumn 2012. The installation was carried out when the ship had a scheduled survey on the shipyard Remontowa in Poland. The key component of the system (Filter, Main Valves, Lamp Drive Cabinet, Control Cabinet, AOT reactor, CIP and Flow Meter) was installed on the lower deck of the machine room in the immediate vicinity of the ballast pumps. Additional Remote Control Panels was installed in the Machine Control Room and in the Ships Office. The PureBallast control system was not integrated with the vessel's ISCS; Operation and monitoring of the Pureballast 3.0 BWMS is performed either on the Main Panel mounted on the control cabinet in the machine room or on one of the two Remote Control Panels installed in the machine control room and in the ships office. During the actual shipboard tests the BWMS was operated by the crew from the Remote Control Panel in the machine control room.

MV Turandot is equipped with two sampling ports; Q201.1 used for sampling intake control/treated water and Q201.2 used for sampling the discharge control/treated water. The samplings ports are positioned in the piping system according to enclosed drawing: 9011279 *Flow chart, PB3 generic.*

The installation (positioning) of the sampling points on MV Turandot is not ideal and does not follow guideline G2 in all details due to limiting space. The installation has been surveyed and approved based on a judgment that the installation is done according to the best option available for this retrofit installation, see DNV survey report for the shipboard test of PureBallast 3.0 BWMS ref. TNANO385CAPPEL121229-1.

The sampling ports are designed as according to enclosed drawing: 590066 rev.2 *Sampling device dim. drw ,* ref approval sampling device ref. TNANO385/CAPPEL262.1-009857-J-9.

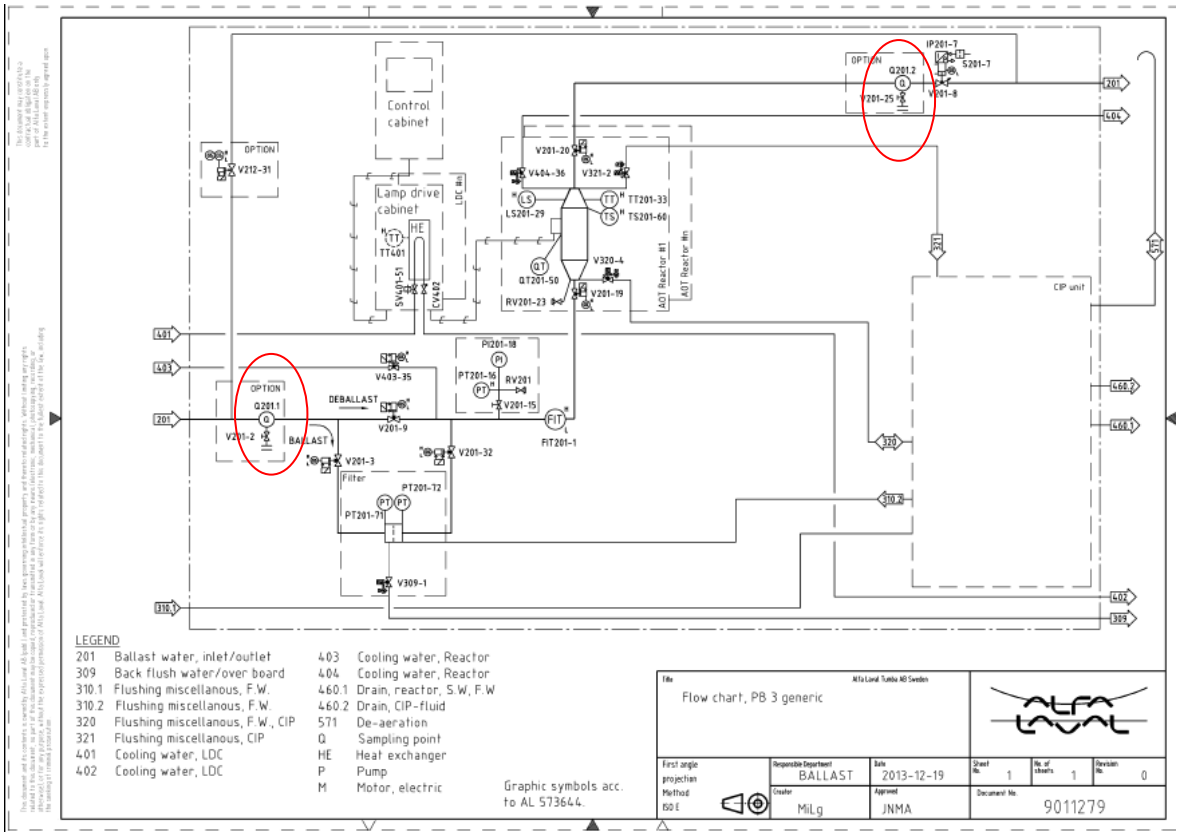

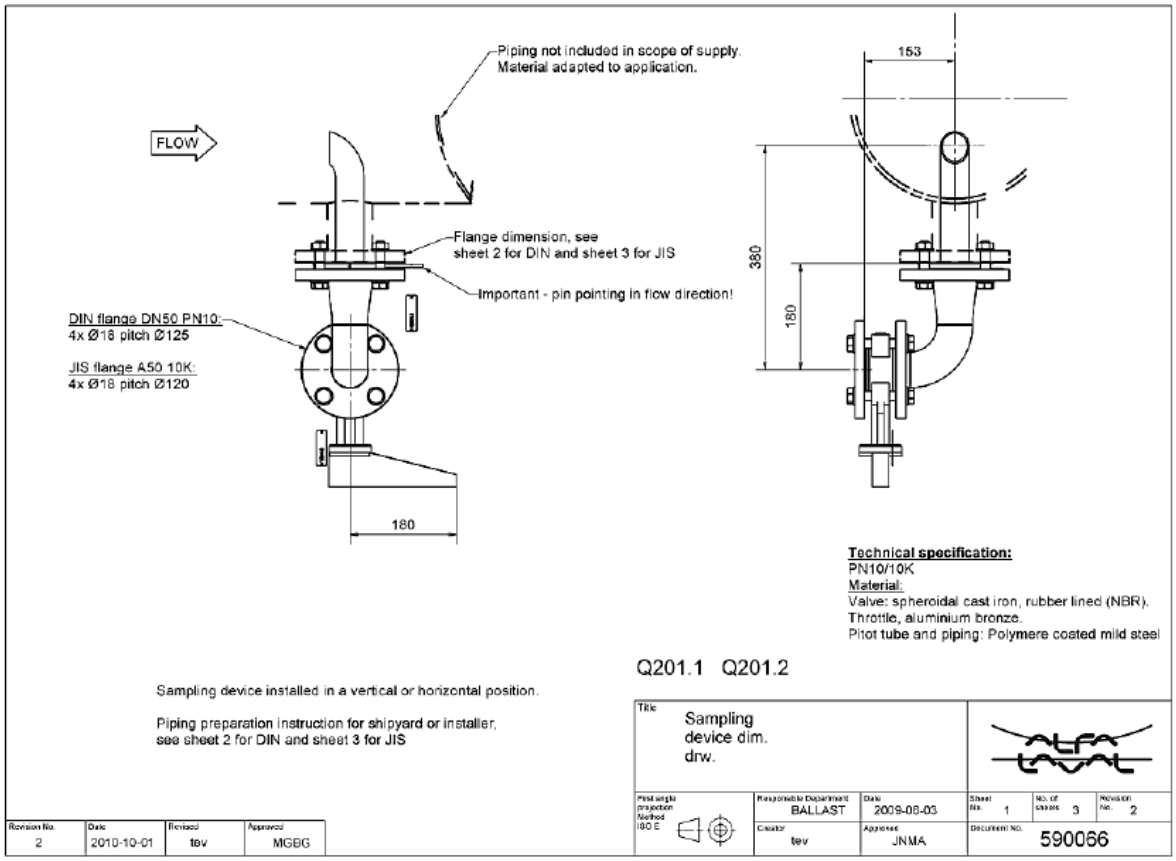

1.3 Ballast Water Operation on MV Turandot

Responsible officer onboard for ballast water operations and to keep the Ballast Water Record Book updated is the C/O (chief officer). The C/O present operated the BWMS during all shipboard tests. During the test period, several crew changes occurred.

Ship construction and load characteristics means that a large part of the ship's regular ballast operations consists of internal transfers i.e. heeling and trim. This is evident in the ship ballast water record book. MV Turandot is equipped with an integrated automatic heeling system which normally is in operation during cargo operations.

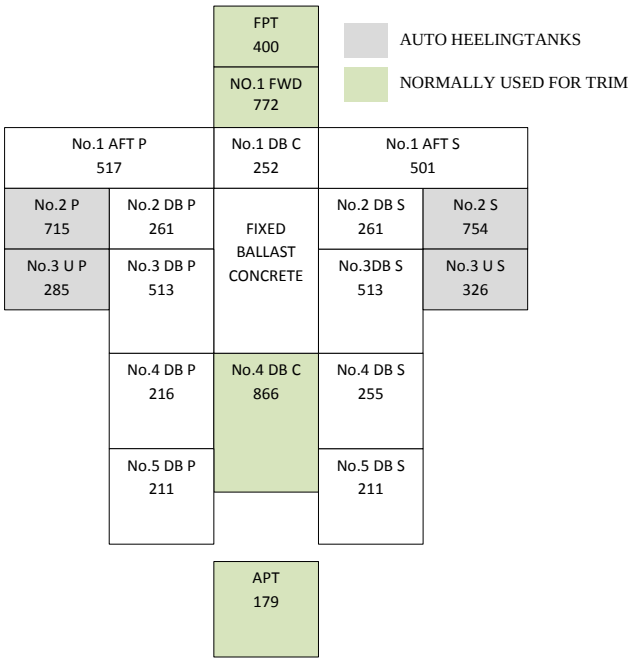

2 Trial period

2.1 Shipboard test performed

Test	Subject	Data	Comment
#1	Date and time ballast start Date and time ballast stop Location for ballast Location for de-ballast	2012-12-29 11:56 2012-12-29 13:15 En route Bremerhaven-Zeebrugge En route Bremerhaven-Zeebrugge	DNV surveyed test To low flow due to diesel generator failure
#2	Date and time ballast start Date and time ballast stop Location for ballast Location for de-ballast	2013-03-13 13:58 2013-03-13 14:48 En route Bremerhaven-Zeebrugge En route Bremerhaven-Zeebrugge	DNV surveyed test
#3	Date and time ballast start Date and time ballast stop Location for ballast Location for de-ballast	2013-04-17 09:42 2013-04-17 10:18 En route Bremerhaven-Gothenburg En route Bremerhaven- Gothenburg	
#4	Date and time ballast start Date and time ballast stop Location for ballast Location for de-ballast	2013-04-18 11:14 2013-04-18 11:49 Outside Gothenburg, drifting Outside Gothenburg, drifting	
#5	Date and time ballast start Date and time ballast stop Location for ballast Location for de-ballast	2013-09-13 03:45 2013-09-13 04:43 Moored in the port of Zeebrugge Moored in the port of Zeebrugge	Contamination during test
#6	Date and time ballast start Date and time ballast stop Location for ballast Location for de-ballast	2013-10-15 15:31 2013-10-16 11:31 Moored in the port of Bremerhaven En route Bremerhaven- Gothenburg	DNV surveyed test

3 Documentation of ballast operations and system performance

3.1 Ballast Water Record Book

Officer in charge of ballast operations (C/O) keep the vessels Ballast Water Record Book up to date after each ballast water operation (Internal transfer, Discharge and Load), every single ballast water tank is recorded separately. The Ballast Water Record Book is an original paper document and is available on board for inspection.

3.2 PureBallast BWMS data monitoring and recording

Event log: The event log includes all important events in the PureBallast system. Intended to be used mainly by service technicians, this file is large and can be difficult to grasp.

Event log – Certificate: Contains a selection of the complete event log, relevant to comply with the IMO regulations.

Alarm history: A list of all alarms and warnings that has been issued from the control system, intended to be used mainly by service technicians.

Since the start of the trial period events related to PureBallast has been recorded by the PureBallast BWMS control system and stored in the PLC log file. Alarm history and important events are logged in the control system. The control system store all alarms and relevant events for at least 24 months. The memory has a vast safety margin but when it is full, data will be deleted starting with the oldest data. Logged information can be exported to a USB memory stick. See PureBallast 3.0 System Manual Ch. 3 Sec. 4.14 for details.
During the testing period, the system software was updated on a number of occasions (Ref. *Adjustments, service and maintenance log for PureBallast 3.0 during shipboard testing*). Before each software update the log file was saved on external memory resulting in 6 successive log files.

The Event log – Certificate covering the test period is reported in sec. 3.5. The complete original files are saved and can be provided upon request.

In PureBallast 3.0 software release 3.0.5 there will be a function to save previously log data in the PLC during a software update.

3.3 Scheduled maintenance

Inspection and cleaning of filter elements (2013-10-09). No corrosion or other degradation was detected.

3.4 Unscheduled maintenance

Maintenance and service is reported in a separate document “Adjustments, service and maintenance log for PureBallast 3.0 during shipboard testing”; below is a brief summary.

Initially there were problems with the reliability of the Lamp Power Supplies, the UV lamps failed to ignite during start-up and sometimes they stopped randomly. Between test one and test two (first approved test) all Lamp Power Supplies (LPS) were exchanged to a newer version. During this period we also detected a communication bug between the filter control logic and the system control logic. Both the filter firmware and the PureBallast control logic were updated with respect to this problem.

During the actual test period the Lamp Power Supply firmware has been upgraded a couple of times to further improve the reliability. The control system software has also been updated to correct minor software bugs.

One safety relay (-KS3 in LDC cabinet) broke during the test period and was exchanged to a new. The failing safety relay blocked the system as it should.

During the test period the vessel Integrated Ship control System (ISCS) was updated (2013-03-13) to display the BWMS and additional piping/valves. Some of the new valves (V/V1, V/V2 and V/V3) installed in ship's ballast piping in connection with installation of the BWMS were hand-operated. These valve were replaced (2013-11-12 and 2013-10-14) with remotely operated valves with feed back to the ship ISCS.

3.5 Copy of Pureballast 3.0 Event log – Certificate

The Code 450 "PureBallast is shut down to failure" is a sum alarm covering a number of alarms, including fuses tripped or turned off. Which explicit alarm that was caused the sum alarm 450 reason can be found in the alarm history file.

Log A

Log time	GPS Position	Value	Alarm/Warning	Code	Description
2012-12-20 11:25:34		0		450	Pure Ballast is shut down due to failure
2012-12-21 11:08:43		0		450	Pure Ballast is shut down due to failure
2012-12-22 09:47:10		0		450	Pure Ballast is shut down due to failure
2012-12-22 10:07:34		0		450	Pure Ballast is shut down due to failure
2012-12-29 09:06:22		0		220	PureBallast is in mode Full Ballast
2012-12-29 09:51:27		217 m^3		330	217 m^3 of ballast intake treated
2012-12-29 09:57:08		0		450	Pure Ballast is shut down due to failure
2012-12-29 11:06:37		0		220	PureBallast is in mode Full Ballast
2012-12-29 11:20:50		77 m^3		330	77 m^3 of ballast intake treated
2012-12-29 11:52:35		0		220	PureBallast is in mode Full Ballast
2012-12-29 13:13:52		469 m^3		330	469 m^3 of ballast intake treated
2012-12-29 17:15:39		0		270	PureBallast is in mode Full DeBallast
2012-12-29 18:01:36		372 m^3		340	372 m^3 of ballast discharge treated
2012-12-29 18:18:33		0		450	Pure Ballast is shut down due to failure

Log B

Log time	GPS Position	Value	Alarm/Warning	Code	Description
2013-01-31 15:35:07		0		350	V212-31 bypass valve in open position
2013-01-31 15:52:07		0		360	V212-31 bypass valve in closed position
2013-02-04 16:15:57		0		450	Pure Ballast is shut down due to failure
2013-02-05 14:15:29		0		350	V212-31 bypass valve in open position
2013-02-05 14:36:41		0		360	V212-31 bypass valve in closed position
2013-02-05 15:34:40		0		350	V212-31 bypass valve in open position
2013-02-05 15:36:29		0		360	V212-31 bypass valve in closed position
2013-02-05 15:36:32		0		350	V212-31 bypass valve in open position
2013-02-05 15:42:28		0		360	V212-31 bypass valve in closed position
2013-02-08 11:15:07		0		450	Pure Ballast is shut down due to failure
2013-02-08 11:16:17		0		350	V212-31 bypass valve in open position
2013-02-08 11:25:22		0		360	V212-31 bypass valve in closed position
2013-02-12 13:12:24		0		350	V212-31 bypass valve in open position
2013-02-12 13:12:24		0		360	V212-31 bypass valve in closed position

Log C

Log time	GPS Position	Value	Alarm/Warning	Code	Description
2013-02-25 14:43:38	N 53° 34' 3,324" E 8° 33' 9,756"	0		220	PureBallast is in mode Full Ballast
2013-02-25 15:06:46	N 53° 34' 3,408" E 8° 33' 9,834"	183 m³		330	183 m³ of ballast intake treated
2013-02-25 15:26:53	N 53° 34' 3,366" E 8° 33' 9,798"	0		220	PureBallast is in mode Full Ballast
2013-02-25 15:59:21	N 53° 34' 3,276" E 8° 33' 9,798"	175 m³		330	175 m³ of ballast intake treated
2013-02-26 10:20:43	N 53° 34' 3,276" E 8° 33' 9,948"	0		220	PureBallast is in mode Full Ballast
2013-02-26 10:37:31	N 53° 34' 3,348" E 8° 33' 9,954"	143 m³		330	143 m³ of ballast intake treated
2013-02-26 10:56:36	N 53° 34' 3,294" E 8° 33' 9,882"	0		450	Pure Ballast is shut down due to failure
2013-03-12 08:08:56	N 53° 34' 33,948" E 8° 33' 16,08"	0		450	Pure Ballast is shut down due to failure
2013-03-13 12:20:57	N 52° 48' 16,572" E 3° 55' 4,356"	0		220	PureBallast is in mode Full Ballast
2013-03-13 12:24:47	N 52° 47' 14,484" E 3° 54' 23,844"	7 m³		330	7 m³ of ballast intake treated
2013-03-13 12:31:09	N 52° 45' 31,776" E 3° 53' 17,982"	0		450	Pure Ballast is shut down due to failure
2013-03-13 12:39:01	N 52° 43' 25,878" E 3° 51' 55,41"	0		220	PureBallast is in mode Full Ballast
2013-03-13 12:45:41	N 52° 41' 37,83" E 3° 50' 51,216"	13 m³		330	13 m³ of ballast intake treated
2013-03-13 12:53:46	N 52° 39' 25,926" E 3° 49' 37,758"	0		220	PureBallast is in mode Full Ballast
2013-03-13 13:49:37	N 52° 25' 16,242" E 3° 39' 45,828"	7 m³		330	7 m³ of ballast intake treated

Log time	GPS Position	Value	Alarm/Warning	Code	Description
2013-03-13 16:41:33	N 51° 48' 33,294" E 3° 7' 52,8"	0		270	PureBallast is in mode Full DeBallast
2013-03-13 17:12:44	N 51° 44' 34,104" E 2° 56' 47,172"	423 m³		340	423 m³ of ballast discharge treated
2013-03-13 17:28:15	N 51° 41' 8,34" E 2° 54' 14,43"	0		270	PureBallast is in mode Full DeBallast
2013-03-13 17:34:48	N 51° 39' 44,982" E 2° 52' 45,888"	80 m³		340	80 m³ of ballast discharge treated

Log D

Log time	GPS Position	Value	Alarm/Warning	Code	Description
2013-04-04 12:04:28		0		450	Pure Ballast is shut down due to failure
2013-04-04 12:18:15		0		450	Pure Ballast is shut down due to failure
2013-04-06 09:38:24		0		450	Pure Ballast is shut down due to failure
2013-04-08 08:54:53		0		450	Pure Ballast is shut down due to failure
2013-04-08 16:42:43		0		450	Pure Ballast is shut down due to failure
2013-04-09 08:07:12		0		450	Pure Ballast is shut down due to failure
2013-04-09 08:07:56		0		450	Pure Ballast is shut down due to failure
2013-04-09 08:54:07		0		270	PureBallast is in mode Full DeBallast
2013-04-09 08:54:19		0		450	Pure Ballast is shut down due to failure
2013-04-09 08:54:43		0 m³		340	0 m³ of ballast discharge treated
2013-04-09 09:00:05		0		270	PureBallast is in mode Full DeBallast
2013-04-09 09:38:04		193 m³		340	193 m³ of ballast discharge treated
2013-04-09 10:51:32		0		350	V212-31 bypass valve in open position
2013-04-09 11:01:40		0		360	V212-31 bypass valve in closed position
2013-04-09 11:08:16		0		450	Pure Ballast is shut down due to failure

Log E

Log time	GPS Position	Value	Alarm/Warning	Code	Description
2013-04-19 07:56:10	N 57° 41' 26,622" E 11° 52' 2,58"	0		450	Pure Ballast is shut down due to failure
2013-04-19 11:12:22	N 57° 41' 26,544" E 11° 52' 2,58"	0		450	Pure Ballast is shut down due to failure
2013-05-06 23:56:49	N 30° 58' 58,164" W 81° 8' 50,664"	0		220	PureBallast is in mode Full Ballast
2013-05-06 23:59:18	N 30° 58' 46,38" W 81° 8' 1,152"	11 m³		330	11 m³ of ballast intake treated
2013-05-21 16:44:39	N 53° 34' 36,06" E 8° 33' 31,308"	0		270	PureBallast is in mode Full DeBallast
2013-05-21 16:49:18	N 53° 34' 36,006" E 8° 33' 31,146"	25 m³		340	25 m³ of ballast discharge treated
2013-05-22 04:57:43	N 53° 34' 36,066" E 8° 33' 31,182"	0		450	Pure Ballast is shut down due to failure
2013-06-24 13:13:43	N 53° 34' 33,96" E 8° 33' 16,254"	0		450	Pure Ballast is shut down due to failure
2013-06-24 13:28:27	N 53° 34' 33,978" E 8° 33' 16,212"	0		220	PureBallast is in mode Full Ballast
2013-06-24 14:16:18	N 53° 34' 34,056" E 8° 33' 16,134"	191 m³		330	191 m³ of ballast intake treated
2013-07-02 06:45:43	N 53° 34' 37,008" E 8° 33' 7,404"	0		220	PureBallast is in mode Full Ballast
2013-07-02 07:55:59	N 53° 34' 36,954" E 8° 33' 7,47"	467 m³		330	467 m³ of ballast intake treated
2013-07-07 05:40:19	N 51° 18' 46,032" E 3° 13' 42,126"	0		270	PureBallast is in mode Full DeBallast
2013-07-07 06:41:43	N 51° 18' 46,194" E 3° 13' 42,084"	518 m³		340	518 m³ of ballast discharge treated
2013-08-24 01:37:29	N 31° 8' 5,664" W 81° 32' 21,576"	0		450	Pure Ballast is shut down due to failure

Log time	GPS Position	Value	Alarm/Warning	Code	Description
2013-08-26 01:37:29	N 31° 7' 42,078" W 81° 31' 4,068"	0		450	Pure Ballast is shut down due to failure
2013-08-26 14:25:48	N 24° 40' 58,698" W 84° 47' 43,17"	0		450	Pure Ballast is shut down due to failure
2013-08-26 14:29:52	N 24° 41' 17,436" W 84° 48' 50,202"	0		450	Pure Ballast is shut down due to failure
2013-08-26 14:36:32	N 24° 41' 46,704" W 84° 50' 33,702"	0		450	Pure Ballast is shut down due to failure
2013-08-27 23:42:48	N 28° 21' 47,13" W 93° 6' 57,852"	0		450	Pure Ballast is shut down due to failure
2013-08-27 23:47:01	N 28° 22' 25,392" W 93° 7' 58,026"	0		450	Pure Ballast is shut down due to failure
2013-08-27 23:50:54	N 28° 23' 0,648" W 93° 8' 53,676"	0		450	Pure Ballast is shut down due to failure
2013-08-28 09:48:07	N 29° 18' 59,088" W 94° 46' 59,286"	0		450	Pure Ballast is shut down due to failure
2013-08-28 09:49:07	N 29° 18' 59,112" W 94° 46' 59,256"	0		450	Pure Ballast is shut down due to failure
2013-08-28 13:33:33	Invalid value	0		450	Pure Ballast is shut down due to failure
2013-08-28 13:42:24	N 29° 18' 59,046" W 94° 46' 59,358"	0		450	Pure Ballast is shut down due to failure
2013-09-03 12:59:48	Invalid value	0		450	Pure Ballast is shut down due to failure
2013-09-12 00:47:08	N 51° 18' 46,116" E 3° 13' 42,168"	0		450	Pure Ballast is shut down due to failure
2013-09-12 01:35:08	N 51° 18' 46,14" E 3° 13' 42,06"	0		220	PureBallast is in mode Full Ballast
2013-09-12 02:43:40	N 51° 18' 46,284" E 3° 13' 42,084"	829 m³		330	829 m³ of ballast intake treated

Log time	GPS Position	Value	Alarm/Warning	Code	Description
2013-09-12 07:28:05	N 51° 18' 46,206" E 3° 13' 42,204"	0		220	PureBallast is in mode Full Ballast
2013-09-12 07:38:39	N 51° 18' 46,176" E 3° 13' 42,18"	33 m³		330	33 m³ of ballast intake treated
2013-09-12 07:48:01	N 51° 18' 46,14" E 3° 13' 42,198"	0		270	PureBallast is in mode Full DeBallast
2013-09-12 08:31:46	N 51° 18' 46,194" E 3° 13' 42,168"	505 m³		340	505 m³ of ballast discharge treated

Log F

Log time	GPS Position	Value	Alarm/Warning	Code	Description
2013-04-19 07:56:10	N 57° 41' 26,622" E 11° 52' 2,58"	0		450	Pure Ballast is shut down due to failure
2013-04-19 11:12:22	N 57° 41' 26,544" E 11° 52' 2,58"	0		450	Pure Ballast is shut down due to failure
2013-05-06 23:56:49	N 30° 58' 58,164" W 81° 8' 50,664"	0		220	PureBallast is in mode Full Ballast
2013-05-06 23:59:18	N 30° 58' 46,38" W 81° 8' 1,152"	11 m³		330	11 m³ of ballast intake treated
2013-05-21 16:44:39	N 53° 34' 36,06" E 8° 33' 31,308"	0		270	PureBallast is in mode Full DeBallast
2013-05-21 16:49:18	N 53° 34' 36,006" E 8° 33' 31,146"	25 m³		340	25 m³ of ballast discharge treated
2013-05-22 04:57:43	N 53° 34' 36,066" E 8° 33' 31,182"	0		450	Pure Ballast is shut down due to failure
2013-06-24 13:13:43	N 53° 34' 33,96" E 8° 33' 16,254"	0		450	Pure Ballast is shut down due to failure
2013-06-24 13:28:27	N 53° 34' 33,978" E 8° 33' 16,212"	0		220	PureBallast is in mode Full Ballast
2013-06-24 14:16:18	N 53° 34' 34,056" E 8° 33' 16,134"	191 m³		330	191 m³ of ballast intake treated
2013-07-02 06:45:43	N 53° 34' 37,008" E 8° 33' 7,404"	0		220	PureBallast is in mode Full Ballast
2013-07-02 07:55:59	N 53° 34' 36,954" E 8° 33' 7,47"	467 m³		330	467 m³ of ballast intake treated
2013-07-07 05:40:19	N 51° 18' 46,032" E 3° 13' 42,126"	0		270	PureBallast is in mode Full DeBallast
2013-07-07 06:41:43	N 51° 18' 46,194" E 3° 13' 42,084"	518 m³		340	518 m³ of ballast discharge treated
2013-08-24 01:37:29	N 31° 8' 5,664" W 81° 32' 21,576"	0		450	Pure Ballast is shut down due to failure

Log time	GPS Position	Value	Alarm/Warning	Code	Description
2013-08-26 01:37:29	N 31° 7' 42,078" W 81° 31' 4,068"	0		450	Pure Ballast is shut down due to failure
2013-08-26 14:25:48	N 24° 40' 58,698" W 84° 47' 43,17"	0		450	Pure Ballast is shut down due to failure
2013-08-26 14:29:52	N 24° 41' 17,436" W 84° 48' 50,202"	0		450	Pure Ballast is shut down due to failure
2013-08-26 14:36:32	N 24° 41' 46,704" W 84° 50' 33,702"	0		450	Pure Ballast is shut down due to failure
2013-08-27 23:42:48	N 28° 21' 47,13" W 93° 6' 57,852"	0		450	Pure Ballast is shut down due to failure
2013-08-27 23:47:01	N 28° 22' 25,392" W 93° 7' 58,026"	0		450	Pure Ballast is shut down due to failure
2013-08-27 23:50:54	N 28° 23' 0,648" W 93° 8' 53,676"	0		450	Pure Ballast is shut down due to failure
2013-08-28 09:48:07	N 29° 18' 59,088" W 94° 46' 59,286"	0		450	Pure Ballast is shut down due to failure
2013-08-28 09:49:07	N 29° 18' 59,112" W 94° 46' 59,256"	0		450	Pure Ballast is shut down due to failure
2013-08-28 13:33:33	Invalid value	0		450	Pure Ballast is shut down due to failure
2013-08-28 13:42:24	N 29° 18' 59,046" W 94° 46' 59,358"	0		450	Pure Ballast is shut down due to failure
2013-09-03 12:59:48	Invalid value	0		450	Pure Ballast is shut down due to failure
2013-09-12 00:47:08	N 51° 18' 46,116" E 3° 13' 42,168"	0		450	Pure Ballast is shut down due to failure
2013-09-12 01:35:08	N 51° 18' 46,14" E 3° 13' 42,06"	0		220	PureBallast is in mode Full Ballast
2013-09-12 02:43:40	N 51° 18' 46,284" E 3° 13' 42,084"	829 m³		330	829 m³ of ballast intake treated

Log time	GPS Position	Value	Alarm/Warning	Code	Description
2013-09-12 07:28:05	N 51° 18' 46,206" E 3° 13' 42,204"	0		220	PureBallast is in mode Full Ballast
2013-09-12 07:38:39	N 51° 18' 46,176" E 3° 13' 42,18"	33 m³		330	33 m³ of ballast intake treated
2013-09-12 07:48:01	N 51° 18' 46,14" E 3° 13' 42,198"	0		270	PureBallast is in mode Full DeBallast
2013-09-12 08:31:46	N 51° 18' 46,194" E 3° 13' 42,168"	505 m³		340	505 m³ of ballast discharge treated

Log G

Comment: Log file format changed to display date and time directly in excel format.

Software V3.0.2

DateTime	GpsPos	EventNumber	Data	Description
2013-10-02 18:39	-	450	0	Pure Ballast is shut down due to failure
2013-10-04 18:08	-	220	0	Pure Ballas is in mode Full Ballast
2013-10-04 18:37	-	330	257	257 m^3 of ballast intake treated
2013-10-05 10:16	-	450	0	Pure Ballast is shut down due to failure
2013-10-05 12:50	-	220	0	Pureballast is in mode Full Ballast
2013-10-05 13:30	-	330	357	357 m^3 of ballast intake treated
2013-10-05 10:43	-	450	0	Pure Ballast is shut down due to failure
2013-10-07 09:58	-	220	0	Pureballast is in mode Full Ballast
2013-10-07 10:08	-	330	79	79 m^3 of ballast intake treated
2013-10-07 10:14	-	270	0	Pureballast is in mode Full DeBallast
2013-10-07 10:27	-	340	77	340 m^3 of ballast discharge treated
2013-10-07 10:34	-	220	0	Pureballast is in mode Full Ballast
2013-10-07 10:43	-	330	69	69 m^3 of ballast intake treated
2013-10-07 10:50	-	270	0	Pureballast is in mode Full DeBallast
2013-10-07 11:03	-	340	73	73 m^3 of ballast discharge treated
2013-10-07 16:42	-	220	0	Pureballast is in mode Full Ballast
2013-10-07 17:13	-	330	242	242 m^3 of ballast intake treated
2013-10-08 10:10	-	220	0	Pure Ballas is in mode Full Ballast
2013-10-08 11:09	-	330	437	437 m^3 of ballast intake treated
2013-10-08 11:16	-	270	0	Pureballast is in mode Full DeBallast
2013-10-08 11:27	-	340	74	74 m^3 of ballast discharge treated
2013-10-08 16:34	-	220	0	Pureballast is in mode Full Ballast
2013-10-08 16:43	-	330	80	80 m^3 of ballast intake treated
2013-10-08 17:22	-	220	0	Pureballast is in mode Full Ballast
2013-10-08 17:50	-	330	256	256 m^3 of ballast intake treated
2013-10-09 14:23	-	450	0	Pure Ballast is shut down due to failure
2013-10-09 14:23	-	450	0	Pure Ballast is shut down due to failure
2013-10-09 14:26	-	450	0	Pure Ballast is shut down due to failure
2013-10-10 11:13	-	220	0	Pure Ballas is in mode Full Ballast
2013-10-10 11:50	-	330	375	375 m^3 of ballast intake treated
2013-10-11 08:02	-	220	0	Pureballast is in mode Full Ballast
2013-10-11 08:39	-	330	371	371 m^3 of ballast intake treated
2013-10-12 07:38	-	270	0	Pureballast is in mode Full DeBallast
2013-10-12 08:12	-	340	229	229 m^3 of ballast discharge treated
2013-10-12 08:18	-	220	0	Pureballast is in mode Full Ballast
2013-10-12 08:42	-	330	227	227 m^3 of ballast intake treated
2013-10-13 06:44	-	450	0	Pure Ballast is shut down due to failure
2013-10-13 07:00	-	220	0	Pureballast is in mode Full Ballast

DateTime	GpsPos	EventNumber	Data	Description
2013-10-13 07:21	-	330	196	196 m^3 of ballast intake treated
2013-10-13 07:27	-	270	0	Pureballast is in mode Full DeBallast
2013-10-13 08:11	-	340	324	324 m^3 of ballast discharge treated
2013-10-15 15:16	-	220	0	Pureballast is in mode Full Ballast
2013-10-15 15:26	-	330	39	39 m^3 of ballast intake treated
2013-10-15 15:31	-	220	0	Pureballast is in mode Full Ballast
2013-10-15 16:20	-	330	798	798 m^3 of ballast intake treated
2013-10-16 11:14	-	220	0	Pureballast is in mode Full Ballast
2013-10-16 11:25	-	330	43	43 m^3 of ballast intake treated
2013-10-16 11:31	-	270	0	Pureballast is in mode Full DeBallast
2013-10-16 12:04	-	340	455	455 m^3 of ballast discharge treated

3.6 Specification critical equipment used during shipboard testing of PureBallast 3.0

Component:	UV sensor
Alfa Laval id.:	9001357 03
Supplier:	UV-Technik, Speziallampen GMBH
Supplier id.:	SUV 20.2 Y2 C40° 3000w/m2 MP, Serial no Y6 020
Calibration protocol:	Enclosed

Component:	UV-lamp, 6 kW
Alfa Laval id.:	9007810 01
Supplier:	Hereaus
Supplier id.:	AL art. Id.
Calibration protocol:	N.A.

Component:	Quarts sleeve
Alfa Laval id.:	9000738 03
Supplier:	Hereaus
Supplier id.:	AL art. Id.
Calibration protocol:	N.A.

Component:	Filter, RF10-25 (parameter p305 Back-flush trigger dp set to 0,85 bar)
Alfa Laval id.:	9006973 80
Supplier:	Hydac
Supplier id.:	RF10-25/ SHD50
Calibration protocol:	N.A.

Component:	Flow Transmitter, A350
Alfa Laval id.:	576179 94
Supplier:	Siemens
Supplier id.:	Code: 7ME63105KR112KA1-Z, Ser.no. 007640H521, Size DN350
Calibration protocol:	Enclosed

Component:	Valve, JIS A250
Alfa Laval id.:	9007174 87
Supplier:	Valve- Ari, Actuator-Air torch, Positioner-Siemens
Supplier id.:	ARI/GESA, DR/SC, Sipart PS2
Calibration protocol:	N.A.

Component:	PLC (CPU)
Alfa Laval id.:	580986 67
Supplier:	B&R Automation
Supplier id.:	X20CP3485-1
Calibration protocol:	N.A.

Component:	Software PLC PB3.0
Alfa Laval id.:	9006851 01
Supplier:	Alfa Laval
Supplier id.:	Pureballast 3.0 V3.00.00
Calibration protocol:	N.A.

Component:	Software, panel
Alfa Laval id.:	9006852 01
Supplier:	Alfa Laval
Supplier id.:	Pureballast 3.0 V3.00.00
Calibration protocol:	N.A.

3.7 Calibration protocol

SIEMENS **Industry Sector**

Factory Calibration Certificate / Werkskalibrierungszertifikat / Certificat d'étalonnage usine

Topic / Thema / Sujet: SITRANS F Flowmeter / Durchflussmessgerät / Débitmètre

Object / Betreff / Objet:

Flowmeter type / Durchflussmessgerättyp / Type de débitmètre	:	Sitrans FM MAG3100
Norminal sensor diameter / Messaufnehmer-Nennweite / Diamètre nominal de capteur	:	DN 350 (14")
Product order No. / Produktbestellnummer / N° de référence d'appareil	:	7ME63105KR112KA1-Z
Options ordered / Bestellten Optionen / Options commandées	:	C14
System serial No. / System Seriennummer / N° de série du systeme	:	007640H521
Sensor serial No. / Messaufnehmer Seriennummer / N° de série de capteur	:	007640H521

Technical data / Technische Daten / Données techniques:

Calibration factor / Kalibrierungsfaktor / Facteur d'étalonnage	:	92.64442315
Calibration medium / Kalibriermedium / Moyen de calibration	:	Water / Wasser / Eau
Calibrated full scale flow / Kalibrierter Messbereichsendwert / Fin de plage de mesure étalonnée	:	1700 m^3/h / 7484.871 US gpm
Calibration rig / Kalibrierstand / Plate-forme d'étalonnage	:	Banc HNU 3

Standards / Normen / Normes:

Reference meter method (reference meter calibrated according to ISO 4185-1980) / Referenzmessgerätmethode (Referenzgerät kalibriert laut ISO 4185-1980) / Méthode avec compteur de référence (étalonné suivant ISO 4185-1980)

Results / Ergebnisse / Résultats:

Point # Messpunkt nr Point mesure n°	Flowrate Durchfluss Débit	Fluid temperature Flüssigkeitstemperatur Température du fluide		Reference flow value Referenz Durchflusswert Débit de référence		Flowmeter output / Duchflussmessgerätausgang / Sortie de débitmètre: Flowrate Durchflussmenge / Débit		Error Fehler / Erreur
	[%]	[°C]	[°F]	[m^3/h]	[US gpm]	[m^3/h]	[US gpm]	[%]
1	88	14.4	57.9	1488.12	6552.01	1490.69	6563.33	0.17
2	26	14.4	57.9	435.45	1917.25	434.70	1913.94	-0.17
3	88	14.5	58.1	1491.49	6566.82	1494.24	6578.96	0.18
4	26	14.4	57.9	433.98	1910.76	433.31	1907.82	-0.15

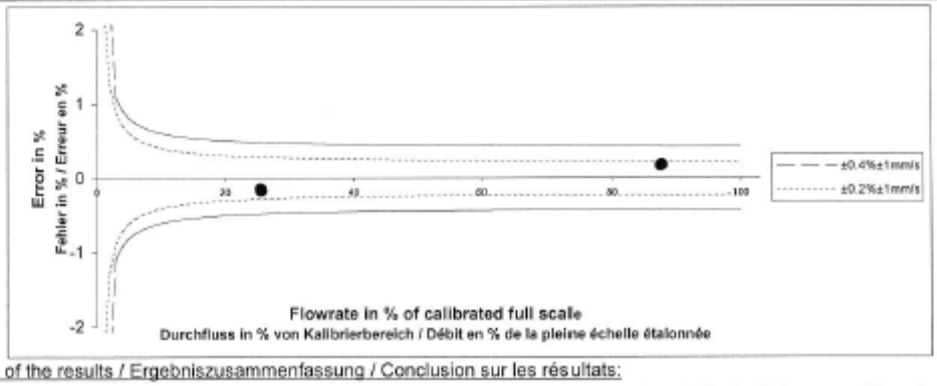

Summary of the results / Ergebniszusammenfassung / Conclusion sur les résultats:

- The measured values are within the specified limits / Die gemessenen Werte liegen innerhalb der Toleranzen / Les résultats de mesure se trouvent dans les tolérances définies

Siemens SAS Etablissement de Haguenau	Issued by / Erstellt von / émis par Hott	Date / Datum / Date 2012/02/09

Page 1

SIEMENS **Industry Sector**

Factory Calibration Certificate / Werkskalibrierungszertifikat / Certificat d'étalonnage usine

Test rig characteristics

Prüfstand Merkmale / Caractéristiques de la plate-forme de test

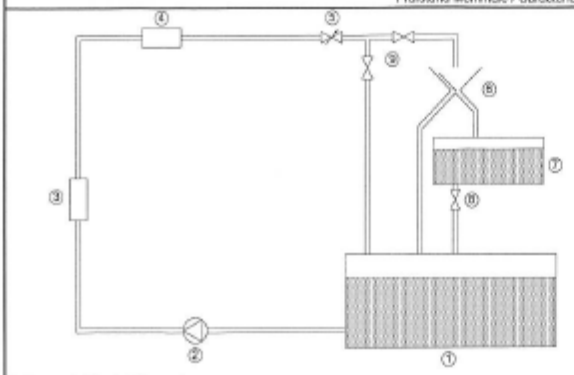

1) Reservoir / Tank / Réservoir
2) Pump / Pumpe / Pompe
3) One or more reference meters / Ein order mehrer Referenz Messgeräte / un ou plusieurs débitmètres de référence
4) Meter under test / Messgerät unter Prüfung / Débitmètre en test
5) Control valve / Kontrollventil / Vanne de régulation
6) Diverter / Kippschaltung / Bascule
7) Weighing tank / Gewichtsmessungstank / Cuve de mesure
8) Drain valve / Abflussventil / Vanne de vidange
9) Valve to switch between reference meter method and static/dynamic weighing method / Ventile zom switchen zwischen Referenz Methode und statische/dynamische Gewichtmessung Methode / Vanne de basculement entre méthode avec débitmètres de référence et méthode par pesée statique or dynamique

Test rig ID / Prüfstand ID / ID de la plate-forme de test	**Banc HNU 3**
Fluid / Flüssigkeit / Fluide	**Water** / Wasser / Eau
Fluid temperature / Flüssigkeit Temp. / Temp. du fluide	**10-30 °C** / 50-86 °F
Test rig capacity / Prüfstand Kapazität / Capacité de la plate-forme	**DN 200...600** / 8"...24"
Max. Flowrate / Max. Durchfluss / Débit max.	**2500 m^3/h** / 11007 US gpm
Min. Flowrate / Min. Durchfluss. / Débit min	**1 m^3/h** / 4.4 US gpm
Max. Mass / Max.Masse / Masse max.	**20000 kg** / 44092 lb
Uncertainty / Ungenauhigkeit / Incertitude	**< 0.1%**

Traceability / Rückverfolgbarkeit / Traçabilité

The Siemens flowmeter calibration process is ISO9001-certified, ensuring the entire calibration procedure is controlled to the highest quality standards.

All primary measuring instrumentation used by the Siemens Flow Laboratory during the performance of its calibrations, has been calibrated with international standards traceability referring directly to the physical unit of measurement according to the International System of Units (SI). Therefore the calibration certificate ensures recognition off the test results worldwide, including the US (NIST traceability).

Der Siemens Kalibrierungsprozess für Durchflussmessgeräte ist ISO9001 zertifiziert, sicherstellend, dass das ganze Kalibrierungsverfahren nach den höchsten Qualitätsstandards kontrolliert ist.

Alle Hauptmessinstrumente, die zur Durchführung der Kalibrierungen vom Siemens Durchfluss Laboratorium genutzt werden, sind kalibriert, um eine Rückverfolgbarkeit auf internationale Normen sicherzustellen. Dies bezieht sich direkt auf die Maßeinheit gemäß dem Internationalen Einheitensystem (SI). Das Kalibrierungszertifikat gewährleistet daher die Anerkennung der Prüfergebnisse weltweit, einschließlich in den USA (NIST-Rückverfolgbarkeit).

Le processus d'étalonnage des débitmètres Siemens est certifiée ISO9001 et est contrôlé périodiquement selon les normes qualités en vigueur les plus élevées.

Tous les instruments de mesure primaires utilisés dans les laboratoires Siemens Flow durant les opérations d'étalonnage ont été étalonnés en conformité avec les normes internationales relatives à l'unité de mesure physique, conformément au système international d'unités (SI). Le certificat d'étalonnage garantit ainsi que les résultats obtenus lors des essais sont conformes aux normes internationales, y compris NIST (USA).

Siemens SAS

Etablissement de Haguenau
1, Chemin de la Sandlach
CS60189
F – 67506 Haguenau Cedex

Tel (+33) 03.69.06.55.55
Fax (+33) 03.69.06.66.66

SIEMENS **Industry Sector**

Certificate / Zertifikat / Certificat

according to / nach / selon EN 10204, Type 2.2

Test report / Werkszeugnis / Relevé de contrôle

Topic / Thema / Thème	:	**SITRANS F M Electromagnetic Flowmeter / SITRANS F M Elektromagnetische Durchflussmesser / SITRANS F M Débitmètre électromagnétique**

Object / Betreff / Objet:

Customer order / Kundenauftrag / Commande client	:	-
Customer / Kunde / Client	:	Axel Larsson Maskinaffer AB
Siemens order / Siemensauftrag / Commande Siemens	:	0000959673/000010
Product order No./ Produkt Bestell Nummer / N° de référence d'appareil	:	7ME63105KR112KA1-Z
Options ordered / Bestellten Optionen / Options commandées	:	C14
Product designation / Produktbennenung / Désignation du produit	:	MAG3100
Serial number / Seriennummer / Numéro de série	:	007640H521

Technical data / Teschnische Daten / Données techniques:

Material / Werkstoff / Matériau

Sensor DN / DN capteur	DN350
Adapter type / Adaptertyp / Type d'adaptateur	JIS B2220, 10k
Liner material / Liner Werkstoff / Matériau liner	Soft Rubber
Electrode material / Elektrode Werkstoff / Matière électrode	Hastelloy C-276
Flange material / Flansch werkstoff / Matériau bride	Carbon Steel
Gasket material / Gummi werkstoff / Matériau joint	-
Enclosure rating /	-

Accessories / Spare parts // Zubehör und Ersatzteile // Accessoires et pièces de rechange N/A [X]

-

Standards / Normen / Normes: Internal instruction

Results / Ergebnisse / Résultats:

	Test of SENSOR to Quality Control Plan A5E02818224A (MAG3100) **, A5E02818227A** (MAG5100 DN50-300) **, A5E02818236A** (MAG5100 DN15-40 / 350-1200)	N/A [ ]
1	Hydrostatic pressure test / Hydrostatische Druckprüfung / Test de pression hydrostatique	
2	Leak test of welds / Lecktest auf Schweißungen / Test de fuite au niveau des soudures	
3	Lining spark test to drawing 083Z2692 /	
4	Functional test and calibration / Funktionsprüfung und Kalibrierung	

	Test of TRANSMITTER to Quality Control Plan A5E01060254A (MAG5000/6000) **or A5E02788963A** (MAG6000I)	N/A [X]
1	In circuit test / ICT Prüfung / Test ICT	
2	High voltage test and final test, including fine adjustment of units and parameters // Hochspannungs- und Endprüfung, einschließlich Feinregelung von Einheiten und Parametern / Test de haute tension, incluant les réglages fins des unités et des paramètres	

Siemens SAS
Div. Prod. Sensors and Communication
Etablissement de Haguenau

1, Chemin de la Sandlach
C.S. 60189
F – 67506 Haguenau Cedex

Tél (+33) 03.69.06.55.55
Fax (+33) 03.69.06.66.66

Version doc du 08/10/2010

SIEMENS **Industry Sector**

Certificate / Zertifikat / Certificat

according to / nach / selon EN 10204, Type 2.2

Test report / Werkszeugnis / Relevé de contrôle

Summary of the results / Ergebnisse Zusammenfassung / Résumé des résultats

The measured values are within the defined limits / Die gemessenen Werte liegen innerhalb der Toleranzen / Les résultats de mesure se trouvent dans les tolérances définies

Comments / Kommentare / Commentaires

The supply / service described was inspected in accordance with the order and declared as true.
Die bezeichnete Lieferung / Leistung wurde entsprechend der Bestellung geprüft und für einwandfrei befunden.
La livraison / le service ci-dessus a été, après vérification, déclaré conforme à la commande.

Department / Abteilung / Service	Function / Funktion / Fonction	Name / Nom	Date / Datum
I IA SC SPA PS3	**Quality Manager Products PS3 / Qualitätbeauftragter Produkte PS3 / Chargé de mission qualité Produits PS3**	**Christmann Bernard**	**09/02/2012**

Siemens SAS
Div. Prod. Sensors and Communication
Etablissement de Haguenau

1, Chemin de la Sandlach
C.S. 60189
F – 67506 Haguenau Cedex

Tél (+33) 03.69.06.55.55
Fax (+33) 03.69.06.66.66

Version doc du 08/10/2010

2/2

Datenblatt SUV 20.2 Y2 C (DVGW 40°)

Allgemeines

Dieser Sensor ist als Anlagensensor in UV-Desinfektionsanlagen vorgesehen und eignet sich zur Überwachung von UV-Bestrahlungsstärken von UV-Niederdruckstrahlern nach DVGW-Arbeitsblatt W 294-3 (Ausgabe 4/2005). Er ist als Einstecksensor für Messfenster von Typ FUV konzipiert. Sensoren dieses Typs zeichnen sich durch eine sehr präzise Messung und eine sehr geringe Alterung aus. Die zugrunde liegende Kalibrierung ist auf ein Normal der Physikalisch Technischen Bundesanstalt Braunschweig zurückführbar.

Technische Daten

	DVGW-Typ SUV 20.2 Y2 C
Zugrundeliegende Norm	DVGW-Arbeitsblatt W 294-3 (06/2006)
Prüfzeichen	noch nicht erteilt, zwischenzeitlich 3.1B Bescheinigung bei uns anfordern
Beschriftung	IL-M SUV20.2Y2C + J-M-lfd. Nr. + MMJJ + 40° + 4-20mA + Messbereich in W/m²
Material des Sensorkörpers	Edelstahl 1.4404
Geometrie	Einsteckbereich ∅ 20 x 59 mm, Gesamtlänge 73 mm, mit Bund und Nut für O-Ring 18,77 x 1,78 *(siehe Zeichnung)*
Druckfestigkeit	1 bar kurzzeitig *(im Messfenster FUV38 bis 16 bar druckfest)*
Umgebungstemperatur	Betriebstemperatur:0 bis +60°C (kurzzeitig 100°C), Lagertemperatur: -20 bis +70°C
Öffnungswinkel	40°, siehe Diagramm
Messbereich / Arbeitsbereich	**50**, **100**[1], 200, **500**[2], 1000 W/m² nach DVGW *([1] Standardwert ND, [2] Standardwert MD)*
Kalibrierunsicherheit	≤ ± 1% zum Referenzradiometer
Selektivität	240 nm - 290 nm
Messunsicherheit	≤ ± 5% vom Endwert
Linearität im Arbeitsbereich	≤ ± 1% vom Endwert siehe Diagramm
Temperaturdrift	≤ ± 1,5% im Temperaturbereich 5°C ... 35°C, bezogen auf 20°C
Langzeitstabilität / Alterung	≤ 1% / 1000h bezogen auf Endwert
Rekalibrierung längstens nach	24 Monate
Betriebsspannung	24 V DC *(min. 12V , max. Versorgungsspannung des verwendeten IC 36 VDC)*
Stromaufnahme	max. 25 mA
Bürde	empfohlen 500 Ohm; sonst berechenbar nach Formel: $R_{Bürde\,max}$ = (UB - 8,5V) / 0,02A
Ausgangssignal	4 - 20 mA entsprechend dem gewählten Messbereich
Anschlussbelegung	+ U_B Stift 1 und 2, I_{out} Stift 3 und 4
Zubehörkabel	Z1G-I 5m lang *(Z3G-I falls längere Kabel gewünscht)*

Zeichnungen und Grafiken siehe Rückseite ➔

Zertifikat der Kalibrierung / Certificate of Calibration

Hiermit bestätigen wir, dass der Sensor in Anlehnung an das DVGW-Arbeitsblatt W 294-3 (06/06) kalibriert wurde.
(Hinweis: vorläufiger Kalibrierwert, da die Zertifizierung noch nicht abgeschlossen ist)
We hereby confirm that the sensor has been calibrated in accordance of the DVGW-work sheet W 294-3 (06/06).
(Note: preliminary calibration value, as the DVGW certification process is not finalized yet)

Letztmaliger Kalibriervergleich des benutzten Betriebsnormals Nummer: AN 021 am 07/05
Last calibration comparison of the internally used reference sensor no.: AN 021 from 07/05
(Vergleich erfolgt mit dem Normal des Lichttechnischen Institutes der Uni Karlsruhe)
(Calibration done with the standard of the Lichttechnischen Institutes of the university of Karlsruhe)

Nummer des Sensors: / Number of sensor: Y6 020

Eingestellter Endwert: / Adjusted end value: 3000 W/m² entspricht: / corresponds: 20 mA Unterschrift: / Signature: 04.06.2013

Beilageblatt SUV 20.2 Y2 C 04.06.2013

APPENDIX D

Data logging from the biological efficacy testing with PureBallast 3.0

Table D.1.1 Data logging treated water, shipboard test cycle No. 1

Subject	Data
Treatment system	PureBallast 3.0
Manufacturer specified parameters (e.g. number of treatment reactors/units, filter model, filter mesh size, etc.)	Reactor: 1 AOT; 16 medium pressure UV lamps Filter: HYDAC (type RF10-35/SDH50); 11 mesh candles 50 µm
Salinity (PSU)	36
Ballast tank No.	Tank set 4 (centre, port and starboard)
Test cycle No.	1
Date and time ballast start	2012.12.29 11:56
Date and time ballast stop	2012.12.29 13:15
Location for ballast (coordinates)	En route Bremerhaven-Zeebrugge 2012.12.29 12:13: N52.57036 / E003.58409 2012.12.29 13:07: N52.44709 / E003.51875
Weather conditions	Wind 41 knots; wave height 2-3 m
Treated volume during ballast	469 m^3
Flow rate during ballast (calculated)	356 m^3/h
Power consumption during ballast*	62 kW
UV intensity during ballast	1,815-1,820 W/m^2
Date and time de-ballast start	2012.12.29 17:18
Date and time de-ballast stop	2012.12.29 18:03
Location for de-ballast (coordinates)	En route Bremerhaven-Zeebrugge 2012.12.29 17:18: N51.52647 / E003.18515 2012.12.29 18:11: N51.46746 / E003.02650
Weather conditions	Wind 41 knots; wave height 2-3 m
Treated volume during de-ballast	372 m^3
Flow rate during de-ballast (calculated)	496 m^3/h
Power consumption during de-ballast*	62 kW
UV intensity during de-ballast	1,634-1,985 W/m^2
General comments/operational issues	The PureBallast 3.0 installation on the vessel had a total rated capacity (TRC) of 1,000 m^3/h. A generator was out of order, which meant that only approx. half of the TRC could be achieved.

* Information on power consumption provided by the manufacturer

Table D.1.2 Data logging control water, shipboard test cycle No. 1

Subject	Data
Salinity (PSU)	36
Ballast tank No.	Tank pair 5 (port and starboard)
Date and time ballast start	2012.12.29 10:04
Date and time ballast stop	2012.12.29 10:55
Location for ballast (coordinates)	En route Bremerhaven-Zeebrugge 2012.12.29 10:11: N53.18368 / E004.30103 2012.12.29 10:48: N53.09939 / E004.24678
Volume during ballast	Approx. 370 m^3
Flow rate during ballast (calculated)	Approx. 440 m^3
Date and time de-ballast start	2012.12.29 18:22
Date and time de-ballast stop	2012.12.29 18:52
Location for de-ballast (coordinates)	En route Bremerhaven-Zeebrugge 2012.12.29 18:27: N51.44988 / E002.57833 2012.12.29 18:53: N51.39992 / E002.52702
Volume during de-ballast	Approx. 240 m^3
Flow rate during de-ballast (calculated)	Approx. 480 m^3/h
General comments/operational issues	-

Table D.1.3 Onsite measurements, shipboard test cycle No. 1 (standard deviations in parentheses)

Water type	Dissolved oxygen (mg/L)	pH	Salinity (PSU)	Temperature (°C)	Turbidity (NTU)
Inlet control	9.5 (±0.36)	8.0 (±0.01)	36 (±0.03)	8.9 (±0.08)	3.3 (±0.58)
Inlet BWMS	9.3 (±0.06)	8.0 (±0.00)	36 (±0.01)	9.2 (±0.06)	3.0 (±0.00)
Control discharge	8.9 (±0.06)	8.0 (±0.00)	35 (±0.00)	8.9 (±0.03)	3.0 (±0.00)
Treated discharge	8.9 (±0.51)	8.0 (±0.01)	35 (±0.26)	9.2 (±0.38)	4.0 (±0.00)

PSU Practical salinity units
NTU Nephelometric turbidity units.

Table D.2.1 Data logging treated water, shipboard test cycle No. 2

Subject	Data
Treatment system	PureBallast 3.0
Manufacturer specified parameters (e.g. number of treatment reactors/units, filter model, filter mesh size, etc.)	Reactor: 1 AOT; 16 medium pressure UV lamps Filter: HYDAC (type RF10-35/SDH50); 11 mesh candles 50 µm
Salinity (PSU)	35
Ballast tank No.	Tank set 4 (centre, port and starboard)
Test cycle No.	2
Date and time ballast start	2013.03.13 13:58
Date and time ballast stop	2013.03.13 14:48
Location for ballast (latitude/longitude)	En route Bremerhaven-Zeebrugge 2013.03.13 13:58: N52.3862 / E3.64223 2013.03.13 14:48: N52.21171 / E3.549198
Weather conditions	Wind 15 knots east; wave height <1 m
Treated volume during ballast	741 m^3
Flow rate during ballast (calculated)	889 m^3/h
Power consumption during ballast*	58 kW
UV intensity during ballast	1,710-1,805 W/m^2
Date and time de-ballast start	2013.03.13 17:44 / 18:29
Date and time de-ballast stop	2013.03.13 18:12 / 18:34
Location for de-ballast (latitude/longitude)	En route Bremerhaven-Zeebrugge 2013.03.13 17:44: N51.76933 / E3.003882 2013.03.13 18:33: N51.43307 / E2.714345
Weather conditions	Wind 15 knots east; wave height <1 m
Treated volume during de-ballast	470 m^3
Flow rate during de-ballast (calculated)	855 m^3/h
Power consumption during de-ballast*	58 kW
UV intensity during de-ballast	1,740-1,770 W/m^2
General comments/operational issues	The de-ballast operation was interrupted between 18:12-18:29 due to malfunction of an auxiliary pump used for ejecting sample water. A manual adjustment of parameter settings for the flow and pressure control valve V201-8 was made upon initiation of ballast operation for treated water. For supporting documentation, refer to DNV survey report (Report No/DNV Reg No.: 385FIST130313-1).

* Information on power consumption provided by the manufacturer

Table D.2.2 Data logging control water, shipboard test cycle No. 2

Subject	Data
Salinity (PSU)	34
Ballast tank No.	Tank pair 5 (port and starboard)
Date and time ballast start	2013.03.13 09:28 / 10:11
Date and time ballast stop	2013.03.13 09:35 / 10:25
Location for ballast (coordinates)	En route Bremerhaven-Zeebrugge 2013.03.13 09:29: N53.47434 / E4.67186 2013.03.13 10:22: N53.26494 / E4.456893
Volume during ballast	360 m^3
Flow rate during ballast (calculated)	1,029 m^3/h
Date and time de-ballast start	2013.03.13 18:52
Date and time de-ballast stop	2013.03.13 19:08
Location for de-ballast (coordinates)	En route Bremerhaven-Zeebrugge 2013.03.13 18:52: N51.37295 / E2.711817 2013.03.13 19:07: N51.3539 / E2.770548
Volume during de-ballast	204 m^3
Flow rate during de-ballast (calculated)	765 m^3/h
General comments/operational issues	The ballast operation was interrupted between 09:35-10:11 due to malfunction of an auxiliary pump used for ejecting sample water.

Table D.2.3 Onsite measurements, shipboard test cycle No. 2 (standard deviations in parentheses)

Water type	Dissolved oxygen (mg/L)	pH	Salinity (PSU)	Temperature (°C)	Turbidity (NTU)
Inlet control	11 (±0.37)	7.8 (±0.03)	34 (±0.11)	3.8 (±0.22)	5.7 (±4.6)
Inlet BWMS	11 (±0.22)	8.0 (±0.00)	35 (±0.15)	4.8 (±0.09)	2.3 (±0.58)
Control discharge	10 (±0.12)	7.8 (±0.01)	34 (±0.01)	4.5 (±0.00)	4.0 (±0.00)
Treated discharge	11 (±0.13)	8.0 (±0.01)	35 (±0.04)	5.0 (±0.48)	2.3 (±0.58)

PSU Practical salinity units
NTU Nephelometric turbidity units

Table D.3.1 Data logging treated water, shipboard test cycle No. 3

Subject	Data
Treatment system	PureBallast 3.0
Manufacturer specified parameters (e.g. number of treatment reactors/units, filter model, filter mesh size, etc.)	Reactor: 1 AOT; 16 medium pressure UV lamps Filter: HYDAC (type RF10-35/SDH50); 11 mesh candles 50 µm
Salinity (PSU)	36
Ballast tank No.	Tank set 4 (centre, port and starboard)
Test cycle No.	3
Date and time ballast start	2013.04.17 09:42
Date and time ballast stop	2013.04.17 10:18
Location for ballast (latitude/longitude)	En route Bremerhaven-Gothenburg 2013.04.17 09:42: N5716.6725 / E00822.6253 2013.04.17 10:18: N5722.7443 / E00837.3459
Weather conditions	Wind 16 knots; direction 245^0; wave height 1-2 m
Treated volume during ballast	570 m^3
Flow rate during ballast (calculated)	950 m^3/h
Power consumption during ballast*	55 kW
UV intensity during ballast	1,280-2,100 W/m^2
Date and time de-ballast start	2013.04.17 15:01
Date and time de-ballast stop	2013.04.17 15:29
Location for de-ballast (latitude/longitude)	En route Bremerhaven-Gothenburg 2013.04.17 15:01: N5946.3494 / E1051.5300 2013.04.17 15:29: N5743.5302 / E1105.1636
Weather conditions	Wind 16 knots; direction 245^0; wave height 1-2 m
Treated volume during de-ballast	405 m^3
Flow rate during de-ballast (calculated)	868 m^3/h
Power consumption during de-ballast*	59 kW
UV intensity during de-ballast	1,218-2,030 W/m^2
General comments/operational issues	-

* Information on power consumption provided by the manufacturer

Table D.3.2 Data logging control water, shipboard test cycle No. 3

Subject	Data
Salinity (PSU)	36
Ballast tank No.	Tank pair 5 (port and starboard)
Date and time ballast start	2013.04.17 08:48
Date and time ballast stop	2013.04.17 09:06
Location for ballast (latitude/longitude)	En route Bremerhaven-Gothenburg 2013.04.17 08:48: N5709.1608 / E00805.5862 2013.04.17 09:16: N5711.5745 / E00813.0217
Volume during ballast	304 m^3
Flow rate during ballast (calculated)	1,013 m^3/h
Date and time de-ballast start	2013.04.17 15:49
Date and time de-ballast stop	2013.04.17 16:06
Location for de-ballast (latitude/longitude)	En route Bremerhaven-Gothenburg 2013.04.17 15:49: N5741.0625 / E1115.1647 2013.04.17 16:06: N5722.4425 / E1122.4425
Volume during de-ballast	205 m^3
Flow rate during de-ballast (calculated)	724 m^3/h
General comments/operational issues	-

Table D.3.3 Onsite measurements, shipboard test cycle No. 3 (standard deviations in parentheses)

Water type	Dissolved oxygen (mg/L)	pH	Salinity (PSU)	Temperature (°C)	Turbidity (NTU)
Inlet control	12 (±0.02)	8.0 (±0.01)	36 (±0.01)	6.2 (±0.00)	2.7 (±1.2)
Inlet BWMS	12 (±0.55)	8.1 (±0.02)	36 (±0.03)	6.2 (±0.20)	2.3 (±0.58)
Control discharge	11 (±0.04)	8.0 (±0.00)	35 (±0.01)	6.3 (±0.04)	3.0 (±0.00)
Treated discharge	11 (±0.09)	8.0 (±0.01)	36 (±0.02)	6.3 (±0.05)	3.3 (±0.58)

PSU Practical salinity units
NTU Nephelometric turbidity units

Table D.4.1 Data logging treated water, shipboard test cycle No. 4

Subject	Data
Treatment system	PureBallast 3.0
Manufacturer specified parameters (e.g. number of treatment reactors/units, filter model, filter mesh size, etc.)	Reactor: 1 AOT; 16 medium pressure UV lamps Filter: HYDAC (type RF10-35/SDH50); 11 mesh candles 50 µm
Salinity (PSU)	22
Ballast tank No.	Tank set 4 (centre, port and starboard)
Test cycle No.	4
Date and time ballast start	2013.04.18 11:14
Date and time ballast stop	2013.04.18 11:49
Location for ballast (latitude/longitude)	Outside Gothenburg, drifting 2013.04.18 11:14: N5733.4956 / E01130.3682 2013.04.18 11:49: N5734.2105 / E01131.0344
Weather conditions	Wind 40 knots; direction 245^0; wave height 2-3 m
Treated volume during ballast	554 m^3
Flow rate during ballast (calculated)	950 m^3/h
Power consumption during ballast*	63 kW
UV intensity during ballast	1,175-1,403 W/m^2
Date and time de-ballast start	2013.04.18 13:12
Date and time de-ballast stop	2013.04.18 13:37
Location for de-ballast (latitude/longitude)	Outside Gothenburg, drifting 2013.04.18 13:12: N5733.4956 / E01130.3682 2013.04.18 13:37: N5734.2105 / E01131.0344
Weather conditions	Wind 40 knots; direction 245^0; wave height 2-3 m
Treated volume during de-ballast	383 m^3
Flow rate during de-ballast (calculated)	919 m^3/h
Power consumption during de-ballast*	62 kW
UV intensity during de-ballast	1,286-1,890 W/m^2
General comments/operational issues	Lamp Power Supply (LPS) units in PureBallast 3.0 stopped randomly during start-up of the system. Circuit breakers for all LPS units were reset, and the system restarted. For more information, see Adjustments, service and maintenance log for shipboard testing of PureBallast 3.0.

* Information on power consumption provided by the manufacturer

Table D.4.2 Data logging control water, shipboard test cycle No. 4

Subject	Data
Salinity (PSU)	21
Ballast tank No.	Tank pair 5 (port and starboard)
Date and time ballast start	2013.04.18 08:53
Date and time ballast stop	2013.04.18 09:10
Location for ballast (latitude/longitude)	Anchorage outside Gothenburg 2013.04.18 08:53: N5733.2461 / E01140.4080 2013.04.18 09:10: N5733.2461 / E01140.4080
Volume during ballast	302 m^3
Flow rate during ballast (calculated)	1,066 m^3/h
Date and time de-ballast start	2013.04.18 13:53
Date and time de-ballast stop	2013.04.18 14:07
Location for de-ballast (latitude/longitude)	Outside Gothenburg, drifting 2013.04.18 13:12: N5733.4956 / E01130.3682 2013.04.18 13:37: N5734.2105 / E01131.0344
Volume during de-ballast	178 m^3
Flow rate during de-ballast (calculated)	763 m^3/h
General comments/operational issues	-

Table D.4.3 Onsite measurements, shipboard test cycle No. 4 (standard deviations in parentheses)

Water type	Dissolved oxygen (mg/L)	pH	Salinity (PSU)	Temperature (°C)	Turbidity (NTU)
Inlet control	12 (±0.33)	7.9 (±0.02)	21 (±0.02)	4.7 (±0.00)	1.0 (±0.00)
Inlet BWMS	11 (±0.08)	8.0 (±0.01)	22 (±0.05)	4.8 (±0.03)	1.0 (±0.00)
Control discharge	12 (±0.05)	8.0 (±0.01)	23 (±0.01)	4.9 (±0.00)	3.3 (±0.58)
Treated discharge	11 (±016)	8.0 (±0.01)	23 (±0.18)	5.0 (±0.08)	2.3 (±1.5)

PSU Practical salinity units
NTU Nephelometric turbidity units

Table D.5.1 Data logging treated water, shipboard test cycle No. 5

Subject	Data
Treatment system	PureBallast 3.0
Manufacturer specified parameters (e.g. number of treatment reactors/units, filter model, filter mesh size, etc.)	Reactor: 1 AOT; 16 medium pressure UV lamps Filter: HYDAC (type RF10-35/SDH50); 11 mesh candles 50 µm
Salinity (PSU)	28
Ballast tank No.	Tank set 4 (centre, port and starboard)
Test cycle No.	5
Date and time ballast start	2013.09.13 03:45
Date and time ballast stop	2013.09.13 04:43
Location for ballast (latitude/longitude)	Port of Zeebrugge (vessel moored behind the locks) N518.7706 / E00313.7033
Weather conditions	Wind 0 knots; wave height 0 m
Treated volume during ballast	784 m^3
Flow rate during ballast (calculated)	811 m^3/h
Power consumption during ballast*	78 kW
UV intensity during ballast	1,061-1,188 W/m^2
Date and time de-ballast start	2013.09.13 09:48
Date and time de-ballast stop	2013.09.13 10:31
Location for de-ballast (latitude/longitude)	Port of Zeebrugge (vessel moored behind the locks) N518.7706 / E00313.7033
Weather conditions	Wind 2 knots; direction 120°; wave height 0 m
Treated volume during de-ballast	505 m^3
Flow rate during de-ballast (calculated)	705 m^3/h
Power consumption during de-ballast*	82 kW
UV intensity during de-ballast	1,062-1,227 W/m^2
General comments/operational issues	System alarm due to high differential pressure on filter during ballast operation (>1 bar). For more information, see Adjustments, service and maintenance log for shipboard testing of PureBallast 3.0.

* Information on power consumption provided by the manufacturer

Table D.5.2 Data logging control water, shipboard test cycle No. 5

Subject	Data
Salinity (PSU)	28
Ballast tank No.	Tank pair 5 (port and starboard)
Date and time ballast start	2013.09.13 02:50
Date and time ballast stop	2013.09.13 03:13
Location for ballast (coordinates)	Port of Zeebrugge (vessel moored behind the locks) N518.7706 / E00313.7033
Volume during ballast	376 m^3
Flow rate during ballast (calculated)	981 m^3/h
Date and time de-ballast start	2013.09.13 10:54
Date and time de-ballast stop	2013.09.13 11:17
Location for de-ballast (coordinates)	Port of Zeebrugge (vessel moored behind the locks) N518.7706 / E00313.7033
Volume during de-ballast	293 m^3
Flow rate during de-ballast (calculated)	764 m^3/h
General comments/operational issues	-

Table D.5.3 Onsite measurements, shipboard test cycle No. 5 (standard deviations in parentheses)

Water type	Dissolved oxygen (mg/L)	pH	Salinity (PSU)	Temperature (°C)	Turbidity (NTU)
Inlet control	5.0 (±0.23)	7.2 (±0.16)	28 (±0.07)	19 (±0.04)	6.3 (±0.58)
Inlet BWMS	4.8 (±0.11)	7.6 (±0.12)	28 (±0.10)	19 (±0.03)	5.7 (±2.5)
Control discharge	5.1 (±0.29)	8.0 (±0.03)	28 (±0.09)	19 (±0.04)	4.0 (±0.00)
Treated discharge	5.1 (±0.26)	7.9 (±0.03)	28 (±0.08)	19 (±0.05)	4.3 (±0.58)

PSU Practical salinity units
NTU Nephelometric turbidity units

Table D.6.1 Data logging treated water, shipboard test cycle No. 6

Subject	Data
Treatment system	PureBallast 3.0
Manufacturer specified parameters (e.g. number of treatment reactors/units, filter model, filter mesh size, etc.)	Reactor: 1 AOT; 16 medium pressure UV lamps Filter: HYDAC (type RF10-35/SDH50); 11 mesh candles 50 µm
Salinity (PSU)	17
Ballast tank No.	Tank set 4 (centre, port and starboard)
Test cycle No.	6
Date and time ballast start	2013.10.15 17:31
Date and time ballast stop	2013.10.15 18:19
Location for ballast (latitude/longitude)	Bremerhaven, Nordhafen BLG AutoTerminal (vessel moored behind the locks)
Weather conditions	Wind 1 knot; direction 270°; wave height 0 m
Treated volume during ballast	798 m^3
Flow rate during ballast (calculated)	998 m^3/h
Power consumption during ballast*	96 kW
UV intensity during ballast	497-563 W/m^2
Date and time de-ballast start	2013.10.16 13:31
Date and time de-ballast stop	2013.10.16 14:04
Location for de-ballast (latitude/longitude)	En route Bremerhaven-Gothenburg 2013.10.16 13:31: N56016954 / E007.248318 2013.10.16 14:04: N56.115115 / E007.300880
Weather conditions	Wind 6.6 knots; direction 170°; wave height 0.5 m
Treated volume during de-ballast	455 m^3
Flow rate during de-ballast (calculated)	827 m^3/h
Power consumption during de-ballast*	96 kW
UV intensity during de-ballast	673-729 W/m^2
General comments/operational issues	Alarm W140 AOT1 alerting for a CIP cycle went off on 2013.10.15 at 13:00 but CIP cycle was not done due to upcoming ballast test. For more information, see Adjustments service and maintenance log for shipboard testing of PureBallast 3.0.

* Information on power consumption provided by the manufacturer

Table D.6.2 Data logging control water, shipboard test cycle No. 6

Subject	Data
Salinity (PSU)	17
Ballast tank No.	Tank pair 5 (port and starboard)
Date and time ballast start	2013.10.15 16:47
Date and time ballast stop	2013.10.15 17:09
Location for ballast (coordinates)	Bremerhaven, Nordhafen BLG AutoTerminal (vessel moored behind the locks)
Volume during ballast	363 m^3
Flow rate during ballast (calculated)	990 m^3/h
Date and time de-ballast start	2013.10.16 14:22
Date and time de-ballast stop	2013.10.16 14:39
Location for de-ballast (coordinates)	En route Bremerhaven-Gothenburg 2013.10.16 14:22-14-39: N56.102222 / E007.323757
Volume during de-ballast	214 m^3
Flow rate during de-ballast (calculated)	755 m^3/h
General comments/operational issues	-

Table D.6.3 Onsite measurements, shipboard test cycle No. 6 (standard deviations in parentheses)

Water type	Dissolved oxygen (mg/L)	pH	Salinity (PSU)	Temperature (°C)	Turbidity (NTU)
Inlet control	6.9 (±0.03)	7.3 (±0.02)	17 (±0.01)	13 (±0.00)	23 (±0.58)
Inlet BWMS	6.8 (±0.03)	7.2 (±0.02)	17 (±0.03)	13 (±0.00)	21 (±0.50)
Control discharge	6.7 (±0.14)	7.6 (±0.01)	18 (±0.01)	14 (±0.00)	13 (±0.00)
Treated discharge	7.1 (±0.04)	7.7 (±0.06)	18 (±0.11)	14 (±0.09)	15 (±1.0)

PSU Practical salinity units
NTU Nephelometric turbidity units

APPENDIX E

Detailed data on biological efficacy analyses and physical-chemical parameters in shipboard testing with PureBallast 3.0

E.1 Sample storage temperatures

Table E.1.1 Sample storage temperatures from sampling to arrival in laboratory

Test cycle	Sample type	Storage temperature (°C)	
		Storage on board	Shipment to DHI (<72 hours)
No. 1	Organisms ≥10 and < 50 µm (CMFDA/FDA)	10-15	5-15
	Organisms ≥10 and < 50 µm (Re-growth)	10-15	10-15
	Organisms ≥10 and < 50 µm (Lugol's solution)	10-15	5-15
	Vibrio cholerae	10-15	5-15
	TSS; POC; DOC; UV-T	10-15	5-15
No. 2	Organisms ≥10 and < 50 µm (CMFDA/FDA)	5-10	5-10
	Organisms ≥10 and < 50 µm (Re-growth)	5-10	5-10
	Organisms ≥10 and < 50 µm (Lugol's solution)	5-10	5-10
	Vibrio cholerae	5-10	5-10
	TSS; POC; DOC; UV-T	5-10	5-10
No. 3	Organisms ≥10 and < 50 µm (CMFDA/FDA)	5-15	5-10
	Organisms ≥10 and < 50 µm (Re-growth)	5-15	5-10
	Organisms ≥10 and < 50 µm (Lugol's solution)	5-15	10-15
	Vibrio cholerae	5-15	5-10
	TSS; POC; DOC; UV-T	5-15	10-15
No. 4	Organisms ≥10 and < 50 µm (CMFDA/FDA)	*	5-10
	Organisms ≥10 and < 50 µm (Re-growth)	*	5-10
	Organisms ≥10 and < 50 µm (Lugol's solution)	*	10-15
	Vibrio cholerae	*	5-10
	TSS; POC; DOC; UV-T	*	5-10
No. 5	Organisms ≥10 and < 50 µm (CMFDA/FDA)	5-10	5-15
	Organisms ≥10 and < 50 µm (Re-growth)	5-10	5-15
	Organisms ≥10 and < 50 µm (Lugol's solution)	5-10	5-15
	Vibrio cholerae	5-10	5-15
	TSS; POC; DOC; UV-T	5-10	5-15
No. 6	Organisms ≥10 and < 50 µm (CMFDA/FDA)	5-10	5-10
	Organisms ≥10 and < 50 µm (Re-growth)	5-10	5-10
	Organisms ≥10 and < 50 µm (Lugol's solution)	5-10	5-10
	Vibrio cholerae	5-10	5-10
	TSS; POC; DOC; UV-T	5-10	5-10

* Transportation to DHI initiated just after samples were collected

E.2 Organism size class ≥50 µm

Table E.2.1 Enumeration of organisms ≥50 µm and sample volumes. The volumes of treated discharge samples analysed within six hours of sampling are provided in parentheses. A description of the statistical analysis used used to confirm the statistical significance and confidence in the treated discharge analyses are presented in Table E.2.2 below.

Test cycle	Water type	Organisms ≥50 µm							
		FR1		FR2		FR3		AVG	STD
		vol. m^3	org/m^3	vol. m^3	org/m^3	vol. m^3	org/m^3	org/m^3	
No. 1	Inlet control	1.6	5,406	1.6	5,295	1.6	3,524	**4,742**	±1,056
	Inlet BWMS	1.3	7,436	1.3	4,542	1.3	7,309	**6,429**	±1,636
	Control discharge	1.1	4,343	1.0	4,507	1.1	4,513	**4,454**	±97
	Treated discharge*	3.5 (0.98)**	2.0	3.5 (0.97)**	0	3.5 (0.64)**	3.1	**1.5 (2.6)*** **	-
No. 2	Inlet control	1.1	9,262	1.1	8,265	1.1	8,336	**8,621**	±556
	Inlet BWMS	1.2	8,229	1.2	8,343	1.1	8,897	**8,490**	±357
	Control discharge	1.1	10,013	1.1	9,285	1.1	10,393	**9,897**	±563
	Treated discharge*	3.1 (1.0)**	0	3.1 (1.2)**	0	3.1 (1.0)**	0	**0 (3.2)*** **	-
No. 3	Inlet control	1.1	5,771	1.2	4,137	1.1	2,822	**4,243**	±1,477
	Inlet BWMS	1.2	2,292	1.2	2,046	1.2	1,962	**2,100**	±172
	Control discharge	1.0	1,293	1.1	1,117	1.1	963	**1,125**	±165
	Treated discharge*	3.0 (0.58)**	0	3.1 (0.60)**	0	3.0 (0.45)**	0	**0 (1.6)*** **	-
No. 4	Inlet control	1.1	24,283	1.1	24,887	1.1	24,654	**24,608**	±305
	Inlet BWMS	1.1	22,651	1.2	25,621	1.1	22,535	**23,603**	±1,749
	Control discharge	1.1	24,169	1.1	24,827	1.1	24,075	**24,357**	±410
	Treated discharge*	3.0 (0.64)**	0	3.0 (0.44)**	4.5	3.0 (0.52)**	1.9	**1.9 (1.6)*** **	-
No. 5	Inlet control	1.2	92,366	1.1	66,340	1.2	72,450	**77,052**	±13,610
	Inlet BWMS	1.6	55,427	1.6	80,712	1.5	47,136	**61,092**	±17,490
	Control discharge	1.2	67,682	1.2	57,380	1.2	56,055	**60,372**	±6,365
	Treated discharge*	3.1 (0.60)**	94	3.1 (0.57)**	95	3.1 (0.58)**	104	**98 (1.8)*** **	-
No. 6	Inlet	1.1	10,047	1.1	10,827	1.1	11,121	**10,665**	±555
	Control discharge	1.3	6,982	1.3	7,494	1.3	8,135	**7,537**	±578
	Treated discharge*	3.1 (1.9)**	1.6	3.1 (2.2)**	10	3.1 (1.9)**	8.8	**7.0 (6.0)*** **	-

* Only analyses performed within six hours from the end of sampling were included in the verification of compliance with the pass criterion. The average concentration of viable organisms in the treated discharge samples was calculated by dividing the total count of organisms in all three replicates by the aggregated sample volume analysed (within six hours from the end of sampling). This pooling of data is consistent with the approach in the ETV protocol /3/.

** Volume of the particular field replicate analysed within six hours after sampling

*** Aggregated sample volume analysed within six hours after sampling including all field replicates

FR Field replicate

AVG Average

STD Standard deviation

Table E.2.2 Description of statistical analysis for enumeration of organisms ≥50 µm in treated discharge samples based on volumes analysed. The process data from the statistical analyses are presented in Appendix F.

Test cycle	Organisms ≥50 µm	
	Statistical analysis	**Conclusion**
No. 1	A total volume of 2.6 m^3 was analysed within 6 hours of sampling. Observed counts were significantly lower than 10 org/m^3 (p=0.00617) with a mean of 1.6 org/m^3. An exact test confirms this result (p=0). However, there is statistical evidence (p = 0.336) that this mean was not constant across all subsamples and so individual field replicates were also considered separately. All 3 field replicates gave very significant results that a mean of 10 org/m^3 is not plausible (p=0.0296; p =0.00795; and p=0.0820 for field replicates 1-3 respectively).	The results of the statistical tests show clearly that the concentration of viable organisms in the ≥50 µm size range from the treated discharge samples during test cycle No. 1 was significantly lower than 10 organisms/m^3.
No. 2	A total volume of 3.2 m^3 was analysed within 6 hours of sampling. Observed counts were significantly lower than 10 org/m^3 (p=0.00068) with a mean of 0 org/m^3. An exact test confirms this result (p=0). All subsamples analysed were observed to contain no organisms.	The results of the statistical tests show clearly that the concentration of viable organisms in the ≥50 µm size range from the treated discharge samples during test cycle No. 2 was significantly lower than 10 organisms/m^3.
No. 3	A total volume of 1.6 m^3 was analysed within 6 hours of sampling. Observed counts were significantly lower than 10 org/m^3 (p=0.0911) with a mean of 0 org/m^3. An exact test confirms this result (p=0). All subsamples analysed were observed to contain no organisms.	The results of the statistical tests show clearly that the concentration of viable organisms in the ≥50 µm size range from the treated discharge samples during test cycle No. 3 was significantly lower than 10 organisms/m^3.
No. 4	A total volume of 1.6 m^3 was analysed within 6 hours of sampling. Observed counts were lower than 10 org/m^3 (p=0.147) with a mean of 1.9 org/m^3. An exact test confirms this result (p=0.00009). However, there is statistical evidence (p = 0.104) that this mean was not constant across all subsamples and so individual field replicates were also considered separately. Field replicate 1 gave a very significant result (p=0.0935) for a mean of 10 org/m^3 not being plausible. Field replicates 2 and 3 both have means less than 10 org/m^3 but without providing a significant result.	The results of the statistical tests show clearly that the concentration of viable organisms in the ≥50 µm size range from the treated discharge samples during test cycle No. 4 was significantly lower than 10 organisms/m^3.
No. 5	A total volume of 1.7 m^3 was analysed within 6 hours of sampling. Observed counts were significantly higher than 10 org/m^3 (p=0) with a mean of 98 org/m^3. An exact test confirms this result (p=0).	The results of the statistical tests show clearly that the concentration of viable organisms in the ≥50 µm size range from the treated discharge samples during test cycle No. 5 was significantly higher than 10 organisms/m^3.
No. 6	A total volume of 6.0 m^3 was analysed within 6 hours of sampling. Observed counts were significantly lower than 10 org/m^3 (p=0.0121) with a mean of 7.0 org/m^3. An exact test confirms this result (p=0.0098). However, there is statistical evidence (p=0.00922) that this mean was not constant across all subsamples and so individual field replicates were also considered separately. Field replicate 1 gave a very significant result (p=0.0117) for a mean of 10 org/m^3 not being plausible. Field replicates 2 and 3 combined have a combined mean of less than 10 org/m^3 but without providing a significant result.	The results of the statistical tests show clearly that the concentration of viable organisms in the ≥50 µm size range from the treated discharge samples during test cycle No. 6 was significantly lower than 10 organisms/m^3.

Table E.2.3 Number of organisms ≥50 µm according to taxonomic group identified in inlet, treated discharge and control discharge water from test cycle No. 1

Phylum/ subphylum	Test cycle No. 1, organisms ≥50 µm (organisms/m^3)											
	Inlet control			Inlet BWMS			Test cycle No. 1 Treated discharge			Test cycle No. 1 Control discharge		
	FR1	FR2	FR3	FR1	FR2	FR3	FR1	FR2	FR3	FR1	FR2	FR3
Total number of organisms ≥50 µm	**5,406**	**5,295**	**3,524**	**7,436**	**4,542**	**7,309**	**2.0**	**0**	**3.1**	**4,343**	**4,507**	**4,513**
Crustacea, nauplii	1,994	2,269	1,532	3,187	1,892	2,885	-	-	-	2,053	2,381	2,295
Other crustacea	2,519	2,723	1,379	3,562	2,082	3,654	2.0	-	3.1	2,132	2,041	2,065
Annelida	-	-	-	-	-	-	-	-	-	-	-	-
Bryozoa	-	-	-	-	-	-	-	-	-	-	-	-
Cilliophora	-	-	-	-	-	-	-	-	-	-	-	-
Dinophyceae	-	-	-	-	-	-	-	-	-	-	-	-
Echinodermata	-	-	-	-	-	-	-	-	-	-	-	-
Mollusca	-	-	153	187	378	192	-	-	-	158	-	-
Nematoda	-	-	-	-	-	-	-	-	-	-	-	-
Platyhelminthes	-	-	-	-	-	-	-	-	-	-	-	-
Rotifera	892	151	460	500	189	577					85	153
Urochordata	-	-	-	-	-	-	-	-	-	-	-	-
Sp.	-	151	-	-	-	--	-	-	-	-	-	-

Table E.2.4 Number of organisms ≥50 µm according to taxonomic group identified in inlet, treated discharge and control discharge water from test cycle No. 2

Phylum/ subphylum	Test cycle No. 2, organisms ≥50 µm (organisms/m^3)											
	Inlet control			Inlet BWMS			Test cycle No. 2 Treated discharge			Test cycle No. 2 Control discharge		
	FR1	FR2	FR3	FR1	FR2	FR3	FR1	FR2	FR3	FR1	FR2	FR3
Total number of organisms ≥50 µm	**9,262**	**8,265**	**8,336**	**8,229**	**8,343**	**8,897**	**0**	**0**	**0**	**10,013**	**9,285**	**10,393**
Crustacea, nauplii	5,909	5,313	5,505	4,898	6,348	6,770	-	-	-	6,487	6,632	5,961
Other crustacea	2,874	2,509	2,831	2,939	1,995	2,128	-	-	-	3,103	2,358	4,280
Annelida	-	148	-	392	-	-	-	-	-	-	-	-
Bryozoa	-	-	-	-	-	-	-	-	-	-	-	-
Cilliophora	-	-	-	-	-	-	-	-	-	-	-	-
Dinophyceae	-	-	-	-	-	-	-	-	-	-	-	-
Echinodermata	-	-	-	-	-	-	-	-	-	-	-	-
Mollusca	-	-	-	-	-	-	-	-	-	-	-	-
Nematoda	-	-	-	-	-	-	-	-	-	-	-	-
Platyhelminthes	-	-	-	-	-	-	-	-	-	-	-	-
Rotifera	-	-	-	-	-	-	-	-	-	-	-	-
Urochordata	-	-	-	-	-	-	-	-	-	-	-	-
Sp.	479	295	-	-	-	-	-	-	-	423	295	153

Table E.2.5 Number of organisms ≥50 µm according to taxonomic group identified in inlet, treated discharge and control discharge water from test cycle No. 3

Phylum/ subphylum	Test cycle No. 3, organisms ≥50 µm (organisms/m^3)											
	Inlet control			Inlet BWMS			Test cycle No. 3 Treated discharge			Test cycle No. 3 Control discharge		
	FR1	FR2	FR3	FR1	FR2	FR3	FR1	FR2	FR3	FR1	FR2	FR3
Total number of organisms ≥50 µm	**5,771**	**4,137**	**2,822**	**2,292**	**2,046**	**1,962**	**0**	**0**	**0**	**1,293**	**1,117**	**963**
Crustacea, nauplii	1,587	591	743	611	584	701	-	-	-	808	209	222
Other crustacea	2,308	2,069	1,485	1,070	1,169	841	-	-	-	323	559	519
Annelida	1,010	887	-	-	292	-	-	-	-	-	-	74
Bryozoa	-	-	-	-	-	-	-	-	-	-	-	-
Cilliophora	433	296	-	-	-	-	-	-	-	-	-	-
Dinophyceae	-	-	-	-	-	-	-	-	-	-	-	-
Echinodermata	144	148	446	153	-	280	-	-	-	-	-	-
Mollusca	289	-	149	458	-	140	-	-	-	162	349	74
Nematoda	-	-	-	-	-	-	-	-	-	-	-	-
Platyhelminthes	-	-	-	-	-	-	-	-	-	-	-	-
Rotifera	-	148	-	-	-	-	-	-	-	-	-	74
Urochordata	-	-	-	-	-	-	-	-	-	-	-	-
Sp.	-	-	-	-	-	-	-	-	-	-	-	-

Table E.2.6 Number of organisms ≥50 µm according to taxonomic group identified in inlet, treated discharge and control discharge water from test cycle No. 4

Phylum/ subphylum	Test cycle No. 4, organisms ≥50 µm (organisms/m^3)											
	Inlet control			Inlet BWMS			Test cycle No. 4 Treated discharge			Test cycle No. 4 Control discharge		
	FR1	FR2	FR3	FR1	FR2	FR3	FR1	FR2	FR3	FR1	FR2	FR3
Total number of organisms ≥50 µm	**24,283**	**24,887**	**24,654**	**22,651**	**25,621**	**22,535**	**0**	**4.5**	**1.9**	**24,169**	**24,827**	**24,075**
Crustacea, nauplii	19,132	16,498	15,215	15,643	17,258	15,297	-	2.3	1.9	17,181	16,551	16,401
Other crustacea	2,355	7,131	8,312	3,129	3,053	3,414	-	2.3		4,077	5,266	4,664
Annelida	442	839	564	626	664	956	-	-	-	1,019	1,053	1,655
Bryozoa	-	-	-	-	-	-	-	-	-	-	-	-
Cilliophora	147	140	-	1,877	2,390	1,229	-	-	-	437	451	451
Dinophyceae	1,766	-	-	1,377	1,460	1,639	-	-	-	582	602	150
Echinodermata	-	-	-	-	-	-	-	-	-	-	-	-
Mollusca	-	-	-	-	-	-	-	-	-	-	-	-
Nematoda	-	-	-	-	-	-	-	-	-	-	-	-
Platyhelminthes	-	-	-	-	-	-	-	-	-	-	-	-
Rotifera	442	280	564	-	797		-	-	-	874	903	752
Urochordata	-	-	-	-	-	-	-	-	-	-	-	-
Sp.	-	-	-	-	-	-	-	-	-	-	-	-

Table E.2.7 Number of organisms ≥50 µm according to taxonomic group identified in inlet, treated discharge and control discharge water from test cycle No. 5

Phylum/ subphylum	Test cycle No. 5, organisms ≥50 µm (organisms/m^3)											
	Inlet control			Inlet BWMS			Test cycle No. 5 Treated discharge			Test cycle No. 5 Control discharge		
	FR1	FR2	FR3	FR1	FR2	FR3	FR1	FR2	FR3	FR1	FR2	FR3
Total number of organisms ≥50 µm	**92,366**	**66,340**	**72,450**	**55,427**	**80,712**	**47,136**	**94**	**95**	**104**	**67,682**	**57,380**	**56,055**
Crustacea, nauplii	2,839	1,212	7,200	3,576	1,086	773	1.7	-	-	2,874	4,656	4,986
Other crustacea	35,962	26,051	17,775	13,589	23,164	13,523	89	91	78	20,405	21,363	18,282
Annelida	9,653	6,513	4,725	2,503	3,981	3,091	-	1.8	-	6,466	4,793	7,555
Bryozoa	-	-	-	-	-	-	-	-	-	-	-	-
Cilliophora	-	-	-	-	-	-	-	-	-	-	-	-
Dinophyceae	-	-	-	-	-	-	-	-	-	-	-	-
Echinodermata	-	-	-	-	-	-	-	-	-	-	-	-
Mollusca	29,338	24,840	32,625	26,462	44,880	26,659	3.3	1.8	8.7	22,992	14,653	14,505
Nematoda	-	-	-	-	-	-	-	-	-	-	-	-
Platyhelminthes	-	-	-	-	-	-	-	-	-	-	-	-
Rotifera	14,574	7,725	9,900	9,297	7,239	3,091	-	-	17	14,945	11,914	10,728
Urochordata	-	-	-	-	-	-	-	-	-	-	-	-
Sp.	-	-	225	-	362	-	-	-	-	-	-	-

Table E.2.8 Number of organisms ≥50 µm according to taxonomic group identified in inlet, treated discharge and control discharge water from test cycle No. 6

Phylum/ subphylum	Test cycle No. 6, organisms ≥50 µm (organisms/m^3)								
	Inlet control			Test cycle No. 6 Treated discharge			Test cycle No.6 Control discharge		
	FR1	FR2	FR3	FR1	FR2	FR3	FR1	FR2	FR3
Total number of organisms ≥50 µm	**10,047**	**10,827**	**11,121**	**1.6**	**10**	**8.8**	**6,982**	**7,494**	**8,135**
Crustacea, nauplii	9,831	10,351	10,542	-	3.2	-	3,797	4,075	3,828
Other crustacea				1.6	6.9	8.3	3,062	3,155	3,828
Annelida	-	-	116	-	-	-	-	-	-
Bryozoa	-	-	-	-	-	-	-	-	-
Cilliophora	108	357	-	-	-	-	-	131	-
Dinophyceae	-	-	-	-	-	-	-	-	-
Echinodermata	-	-	-	-	-	-	-	-	-
Mollusca	-	119	-	-	-	-	-	-	239
Nematoda	-	-	-	-	-	-	-	-	-
Platyhelminthes	-	-	-	-	-	-	-	-	-
Rotifera	108	-	348	-	-	-	122	131	239
Urochordata	-	-	-	-	-	-	-	-	-
Sp.			116	-	-	0.5	-	-	-

E.3 Organism size class ≥10 and <50 µm

Table E.3.1 Enumeration of organisms ≥10 µm and <50 µm by microscopy. The concentrations of motile organisms without chlorophyll are included in the total number of organisms.

Test cycle	Water type	≥10 µm and <50 µm (organisms/mL)										
		Total number of organisms					Motile organisms without chlorophyll					Date and time of analysis
		FR1	FR2	FR3	AVG	STD	FR1	FR2	FR3	AVG	STD	
No. 1	Inlet control	61	53	37	**50**	±12	-	-	-	**-**	-	-
	Inlet BWMS	81	79	50	**70**	±17	-	-	-	**-**	-	
	Control discharge	8.8	32	7.3	**16**	±14	0	13	0	**4.2**	±7.2	2012.12.31 09:20-13:10
	Treated discharge	0.20	0.80	0.60	**0.53**	±0.31	0	0	0	**0**	-	
No. 2	Inlet control	189	264	250	**234**	±40	-	-	-	**-**	-	-
	Inlet BWMS	1,500	1,066	739	**1,102**	±382	-	-	-	**-**	-	
	Control discharge	285	283	355	**308**	±41	20	24	15	**20**	±4.3	2013.03.15 10:15-13:55
	Treated discharge	4.0	2.5	2.0	**2.8**	±1.0	0	0	0	**0**	-	
No. 3	Inlet control	694	589	705	**663**	±64	-	-	-	-	-	-
	Inlet BWMS	778	833	750	**787**	±42	-	-	-	-	-	
	Control discharge	378	247	320	**315**	±66	8.0	6.7	10	**8.2**	±1.7	2013.04.19 07:15-09:25
	Treated discharge	1.0	0.50	0.75	**0.75**	±0.25	0	0	0	**0**	-	
No. 4	Inlet control	100	133	172	**135**	±36	-	-	-	-	-	-
	Inlet BWMS	69	128	111	**103**	±30	-	-	-	-	-	
	Control discharge	73	83	64	**73**	±9.5	11	6.0	5.0	**7.3**	±3.2	2013.04.19 10:25-12:25
	Treated discharge	0.50	1.5	0	**0.67**	±0.76	0	0	0	**0**	-	
No. 5	Inlet control	242	242	237	**240**	±3.0	-	-	-	**-**	-	-
	Inlet BWMS	174	192	174	**180**	±11	-	-	-	**-**	-	
	Control discharge	213	279	277	**256**	±37	27	15	20	**21**	±5.9	2013.09.16 10:00-12:35
	Treated discharge	4.5	4.8	7.0	**5.4**	±1.4	0	0	0	**0**	-	
No. 6	Inlet	168	242	116	**175**	±63	-	-	-	**-**	-	-
	Control discharge	49	49	55	**51**	±3.5	7.0	10	4.0	7.0	±3.0	2013.10.17 12:30-13:40
	Treated discharge	5.0	6.8	7.5	**6.4**	±1.3	0	0	0	**0**	-	

FR Field replicate
AVG Average
STD Standard deviation

Table E.3.2 Determination of algal re-growth by the most probable number (MPN) assay

Test cycle	Water type	Viable algae (organisms/mL)				
		FR1	FR2	FR3	AVG	STD
No. 1	Inlet control	92 (29-290)	160 (54-480)	160 (54-480)	**137**	±39
	Inlet BWMS	92 (29-290)	160 (54-480)	>160	**137**	-
	Control discharge	92 (29-290)	92 (29-290)	>160	**115**	-
	Treated discharge	<0.18	<0.18	<0.18	**<0.18**	-
No. 2	Inlet control	>160	>160	160 (54-480)	**>160**	-
	Inlet BWMS	>160	>160	>160	**>160**	-
	Control discharge	>160	>160	>160	**>160**	-
	Treated discharge	0.45 (0.11-1.8)	<0.18	<0.18	**0.27**	±0.16
No. 3	Inlet control	>160	>160	>160	**>160**	-
	Inlet BWMS	>160	>160	>160	**>160**	-
	Control discharge	92 (29-290)	>160	>160	**137**	±39
	Treated discharge	<0.18	<0.18	<0.18	**<0.18**	-
No. 4	Inlet control	13 (4.7-36)	54 (16-180)	35 (12-100)	**34**	±21
	Inlet BWMS	11 (3.8-31)	7.0 (2.2-22)	11 (3.8-31)	**10**	±2.3
	Control discharge	54 (16-180)	35 (12-100)	92 (29-290)	**60**	±29
	Treated discharge	<0.18	<0.18	<0.18	**<0.18**	-
No. 5	Inlet control	>160	>160	>160	>160	-
	Inlet BWMS	>160	>160	>160	**>160**	-
	Control discharge	>160	>160	>160	**>160**	-
	Treated discharge	0.2 (0.03-1.4)	<0.18	<0.18	**0.19**	±0.01
No. 6	Inlet	>160	>160	>160	**>160**	-
	Control discharge	>160	>160	>160	**>160**	-
	Treated discharge	<0.18	<0.18	<0.18	**<0.18**	-

FR Field replicate
AVG Average
( ) 95% confidence interval
STD Standard deviation

Table E.3.3 Algal taxa and species identified in inlet water and their capability for growth under the conditions applied in the algal re-growth assay

Phylum/ subphylum	Species	Test cycle No. 1	Test cycle No. 2	Test cycle No. 3	Test cycle No. 4	Test cycle No. 5	Test cycle No. 6	Capable of growing in re-growth assay
Bacillariophyceae	*Asterionellapsis glacialis*	X	X	X				X
	Chaetoceros affinis			X	X			X
	Chaetoceros compressus			X				X
	Chaetoceros danicus		X					X
	Chaetoceros debilis			X	X			X
	Chaetoceros decipiens			X				X
	Chaetoceros muelleri		X					
	Chaetoceros socialis					X		X
	Coscindscus radiata	X		X				X
	Cyclotella stelligera		X					
	Dactyliosen fragilissimus	X				X		X
	Ditylum brightwellii		X			X		X
	Eucampia zodiacus					X		
	Guinardia flaccida					X		X
	Lauderia annulata			X				X
	Leptocylindrus danicus		X	X			X	X
	Melosira nummuloides					X		X
	Nitzschia sp.						X	X
	Odontella mobiliensis						X	X
	Paralia sulcata	X						
	Pleurosigma elongatum	X						X
	Porosira glacialis			X	X			X
	Rhizosolenia fragilissima		X					
	Rhizosolenia styliformis			X	X			X
	Skeletonema costatum	X		X	X	X	X	X
	Stephanopyxis turris		X					X
	Thalassionema nitzschioides			X				X
	Thalassiosira augusta-lineata			X				X
	Thalassiosira baltica	X	X					X
	Thalassiosira guillardii		X					X
	Thalassiosira nordenskioldii	X				X		X
	Thalassiosira sp.						X	X
Chlorophyceae	*Tetraselmis* sp.		X				X	X
Cryptophyceae	*cf. Cryptomonas* sp.	X			X			X
Dictyocophyceae	*Dictyocha speculum*		X					
Dinophyceae	*Amphidinium* sp.			X		X	X	X
	Dinophysis acuminata	X						
	Gymnodinium simplex		X					
	Gymnodinium spp.	X						X
	Gyrodinium fusiforme	X						X
	Gyrodinium spirale					X		X
	Heterocapsa triquetra		X					X
	Katodinium glaucum			X	X			X
	Protoperidinium depressum				X			X
	Protoperidinium granii					X		

E.4 Organism size class <10 µm (bacteria)

Table E.4.1 Enumeration of enterococci

Test cycle	Water type	Enterococci (CFU/100 mL)										
		FR1	FR2	FR3	FR4	FR5	FR6	FR7	FR8	FR9	AVG	STD
No. 1	Inlet control	<10	<10	<10	-	-	-	-	-	-	**<10**	-
	Inlet BWMS	<10	<10	<10	-	-	-	-	-	-	**<10**	-
	Control discharge	<10	<10	<10	-	-	-	-	-	-	**<10**	-
	Treated discharge	<10	<10	<10	<10	<10	<10	<10	<10	<10	**<10**	-
No. 2	Inlet control	<10	<10	<10	-	-	-	-	-	-	**<10**	-
	Inlet BWMS	<10	<10	<10	-	-	-	-	-	-	**<10**	-
	Control discharge	<10	<10	<10	-	-	-	-	-	-	**<10**	-
	Treated discharge	<10	<10	<10	<10	<10	<10	<10	<10	<10	**<10**	-
No. 3	Inlet control	<10	<10	<10	-	-	-	-	-	-	**<10**	-
	Inlet BWMS	<10	<10	<10	-	-	-	-	-	-	**<10**	-
	Control discharge	<10	10	43	-	-	-	-	-	-	**21**	±19
	Treated discharge	<10	<10	<10	<10	<10	<10	<10	<10	<10	**<10**	-
No. 4	Inlet control	<10	<10	<10	-	-	-	-	-	-	**<10**	-
	Inlet BWMS	<10	<10	<10	-	-	-	-	-	-	**<10**	-
	Control discharge	32	10	<10	-	-	-	-	-	-	**17**	±13
	Treated discharge	10	<10	<10	<10	<10	<10	<10	<10	<10	**<10**	-
No. 5	Inlet control	<10	<10	10	-	-	-	-	-	-	**<10**	-
	Inlet BWMS	10	10	<10	-	-	-	-	-	-	**10**	-
	Control discharge	180	360	210	-	-	-	-	-	-	**250**	±96
	Treated discharge	<10	<10	<10	<10	<10	<10	<10	<10	<10	**<10**	-
No. 6	Inlet	32	32	32	-	-	-	-	-	-	**32**	±0.0
	Control discharge	21	21	21	-	-	-	-	-	-	**21**	±0.0
	Treated discharge	<10	<10	<10	<10	<10	<10	<10	<10	<10	**<10**	-

CFU Colony-forming units
FR Field replicate
AVG Average
STD Standard deviation

Table E.4.2 Enumeration of *E. coli*

Test cycle	Water type	*E. coli* (CFU/100 mL)										
		FR1	FR2	FR3	FR4	FR5	FR6	FR7	FR8	FR9	AVG	STD
No. 1	Inlet control	43	32	10	-	-	-	-	-	-	**28**	±17
	Inlet BWMS	<10	<10	10	-	-	-	-	-	-	**<10**	-
	Control discharge	<10	<10	<10	-	-	-	-	-	-	**<10**	-
	Treated discharge	<10	10	<10	<10	<10	<10	10	<10	10	**<10**	-
No. 2	Inlet control	10	<10	10	-	-	-	-	-	-	**10**	-
	Inlet BWMS	10	10	<10	-	-	-	-	-	-	**10**	-
	Control discharge	10	<10	<10	-	-	-	-	-	-	**<10**	-
	Treated discharge	<10	<10	<10	10	<10	<10	21	<10	<10	**11**	-
No. 3	Inlet control	<10	<10	<10	-	-	-	-	-	-	**<10**	-
	Inlet BWMS	<10	<10	<10	-	-	-	-	-	-	**<10**	-
	Control discharge	<10	<10	<10	-	-	-	-	-	-	**<10**	-
	Treated discharge	<10	<10	<10	<10	<10	<10	<10	<10	<10	**<10**	-
No. 4	Inlet control	21	<10	<10	-	-	-	-	-	-	**14**	±6.4
	Inlet BWMS	<10	21	<10	-	-	-	-	-	-	**14**	±6.4
	Control discharge	<10	10	<10	-	-	-	-	-	-	**<10**	-
	Treated discharge	<10	<10	<10	<10	<10	<10	<10	<10	10	**<10**	-
No. 5	Inlet control	53	10	32	-	-	-	-	-	-	**32**	±22
	Inlet BWMS	21	43	<10	-	-	-	-	-	-	**25**	±17
	Control discharge	210	340	320	-	-	-	-	-	-	**290**	±70
	Treated discharge	10	10	21	<10	10	<10	<10	10	10	**11**	±3.7
No. 6	Inlet	65	76	65	-	-	-	-	-	-	**69**	±6.4
	Control discharge	32	53	32	-	-	-	-	-	-	**39**	±12
	Treated discharge	<10	<10	<10	<10	<10	<10	<10	<10	<10	**<10**	-

CFU Colony-forming units
FR Field replicate
AVG Average
STD Standard deviation

Table E.4.3 Enumeration of *Vibrio cholerae*

Test cycle	Water type	*Vibrio cholerae* (CFU/100 mL)										
		FR1	FR2	FR3	FR4	FR5	FR6	FR7	FR8	FR9	AVG	STD
No. 1	Inlet control	Absent	Absent	Absent	-	-	-	-	-	-	-	-
	Inlet BWMS	Absent	Absent	Absent	-	-	-	-	-	-	-	-
	Control discharge	Absent	Absent	Absent	-	-	-	-	-	-	-	-
	Treated discharge	Absent	Absent	Absent	Absent	Absent	Absent	Absent	Absent	Absent	-	-
No. 2	Inlet control	Absent	Absent	Absent	-	-	-	-	-	-	-	-
	Inlet BWMS	Absent	Absent	Absent	-	-	-	-	-	-	-	-
	Control discharge	Absent	Absent	Absent	-	-	-	-	-	-	-	-
	Treated discharge	Absent	Absent	Absent	Absent	Absent	Absent	Absent	Absent	Absent	-	-
No. 3	Inlet control	Absent	Absent	Absent	-	-	-	-	-	-	-	-
	Inlet BWMS	Absent	Absent	Absent	-	-	-	-	-	-	-	-
	Control discharge	Absent	Absent	Absent	-	-	-	-	-	-	-	-
	Treated discharge	Absent	Absent	Absent	Absent	Absent	Absent	Absent	Absent	Absent	-	-
No. 4	Inlet control	Absent	Absent	Absent	-	-	-	-	-	-	-	-
	Inlet BWMS	Absent	Absent	Absent	-	-	-	-	-	-	-	-
	Control discharge	Absent	Absent	Absent	-	-	-	-	-	-	-	-
	Treated discharge	Absent	Absent	Absent	Absent	Absent	Absent	Absent	Absent	Absent	-	-
No. 5	Inlet control	Absent	Absent	Absent	-	-	-	-	-	-	-	-
	Inlet BWMS	Absent	Absent	Absent	-	-	-	-	-	-	-	-
	Control discharge	Absent	Absent	Absent	-	-	-	-	-	-	-	-
	Treated discharge	Absent	Absent	Absent	Absent	Absent	Absent	Absent	Absent	Absent	-	-
No. 6	Inlet	Absent	Absent	Absent	-	-	-	-	-	-	-	-
	Control discharge	Absent	Absent	Absent	-	-	-	-	-	-	-	-
	Treated discharge	Absent	Absent	Absent	Absent	Absent	Absent	Absent	Absent	Absent	-	-

CFU Colony-forming units
FR Field replicate
AVG Average
STD Standard deviation

E.5 Physical-chemical parameters

Table E.5.1 Measurements of total suspended solids (TSS)

Test cycle	Water type	TSS (mg/L)				
		FR1	FR2	FR3	AVG	STD
No. 1	Inlet control	19	15	10	**15**	±4.1
	Inlet BWMS	8.4	8.6	12	**9.5**	±1.8
	Control discharge	8.3	11	8.4	**9.1**	±1.3
	Treated discharge	10	8.2	10	**9.6**	±1.2
No. 2	Inlet control	53	47	38	**46**	±7.4
	Inlet BWMS	46	42	38	**42**	±4.3
	Control discharge	45	44	47	**45**	±1.4
	Treated discharge	44	43	41	**43**	±1.5
No. 3	Inlet control	24	15	8.1	**16**	±8.1
	Inlet BWMS	4.2	4.1	3.1	**3.8**	±0.61
	Control discharge	5.3	5.6	3.9	**4.9**	±0.90
	Treated discharge	8.4	4.6	6.3	**6.5**	±1.9
No. 4	Inlet control	5.1	*	3.0	**4.0**	-
	Inlet BWMS	3.3	1.8	5.9	**3.7**	±2.0
	Control discharge	2.9	2.8	3.1	**2.9**	±0.14
	Treated discharge	3.3	1.3	7.6	**4.1**	±3.2
No. 5	Inlet control	8.5	7.2	9.9	**8.5**	±1.4
	Inlet BWMS	5.1	8.2	3.8	**5.7**	±2.3
	Control discharge	6.2	6.6	4.8	**5.9**	±0.95
	Treated discharge	8.9	6.6	5.9	**7.1**	±1.6
No. 6	Inlet	43	37	29	**36**	±7.3
	Control discharge	17	20	17	**18**	±1.7
	Treated discharge	21	21	22	**21**	±0.58

FR Field replicate
AVG Average
STD Standard deviation
* Sample lost

Table E.5.2 Measurements of particulate organic carbon (POC)

Test cycle	Water type	POC (mg/L)				
		FR1	FR2	FR3	AVG	STD
No. 1	Inlet control	0.29	0.68	0.63	**0.53**	±0.21
	Inlet BWMS	0.64	0.53	0.37	**0.51**	±0.14
	Control discharge	0.48	0.45	0.36	**0.43**	±0.06
	Treated discharge	0.24	0.43	0.39	**0.35**	±0.10
No. 2	Inlet control	0.89	<0.1	<0.1	**0.36**	-
	Inlet BWMS	<0.1	<0.1	<0.1	**<0.1**	-
	Control discharge	<0.1	<0.1	<0.1	**<0.1**	-
	Treated discharge	<0.1	<0.1	<0.1	**<0.1**	-
No. 3	Inlet control	0.21	<0.1	0.31	**0.21**	±0.10
	Inlet BWMS	0.60	0.36	0.62	**0.53**	±0.15
	Control discharge	<0.1	<0.1	<0.1	**<0.1**	-
	Treated discharge	0.64	<0.1	0.18	**0.31**	±0.29
No. 4	Inlet control	0.11	<0.1	0.33	**0.18**	±0.15
	Inlet BWMS	<0.1	0.15	<0.1	**0.12**	±0.03
	Control discharge	<0.1	<0.1	<0.1	**<0.1**	-
	Treated discharge	<0.1	<0.1	<0.1	**<0.1**	-
No. 5	Inlet control	0.24	0.35	0.15	**0.24**	±0.10
	Inlet BWMS	0.12	<0.1	0.14	**0.12**	±0.02
	Control discharge	0.36	0.17	0.19	**0.24**	±0.11
	Treated discharge	0.16	<0.1	<0.1	**0.12**	±0.04
No. 6	Inlet	0.60	0.90	<0.1	**0.53**	±0.40
	Control discharge	0.25	<0.1	<0.1	**0.15**	±0.08
	Treated discharge	0.29	<0.1	0.30	**0.23**	±0.11

FR Field replicate
AVG Average
STD Standard deviation

Table E.5.3 Measurements of particulate organic carbon (DOC)

Test cycle	Water type	DOC (mg/L)				
		FR1	FR2	FR3	AVG	STD
No. 1	Inlet control	0.16	0.10	<0.1	**0.12**	-
	Inlet BWMS	0.13	<0.1	<0.1	**0.11**	-
	Control discharge	0.50	0.45	0.44	**0.46**	±0.03
	Treated discharge	0.66	0.13	0.13	**0.31**	±0.31
No. 2	Inlet control	0.44	1.1	1.0	**0.87**	±0.38
	Inlet BWMS	1.4	1.5	1.3	**1.4**	±0.08
	Control discharge	1.7	1.6	1.8	**1.7**	±0.10
	Treated discharge	1.0	1.3	2.0	**1.5**	±0.49
No. 3	Inlet control	2.3	1.3	1.3	**1.6**	±0.57
	Inlet BWMS	0.78	0.82	0.93	**0.84**	±0.08
	Control discharge	1.3	1.1	1.2	**1.2**	±0.11
	Treated discharge	1.0	1.4	1.3	**1.2**	±0.21
No. 4	Inlet control	1.9	2.4	1.8	**2.1**	±0.32
	Inlet BWMS	2.1	1.9	2.4	**2.2**	±0.26
	Control discharge	2.4	2.1	2.3	**2.2**	±0.15
	Treated discharge	2.3	2.5	2.6	**2.4**	±0.16
No. 5	Inlet control	4.2	3.5	3.7	**3.8**	±0.35
	Inlet BWMS	3.2	3.3	3.2	**3.3**	±0.07
	Control discharge	4.0	3.9	3.6	**3.8**	±0.19
	Treated discharge	3.0	3.1	3.1	**3.1**	±0.07
No. 6	Inlet	6.1	4.7	4.0	**5.0**	±1.0
	Control discharge	3.1	3.3	3.3	**3.2**	±0.10
	Treated discharge	3.2	3.2	3.1	**3.2**	±0.09

FR Field replicate
AVG Average
STD Standard deviation

Table E.5.4 Concentration of mineral materials (MM). Concentration determined as the difference between the total suspended solids (TSS) and the particulate organic carbon (POC).

Test cycle	Water type	MM (mg/L)				
		FR1	FR2	FR3	AVG	STD
No. 1	Inlet control	18	15	10	**14**	±4.3
	Inlet BWMS	7.7	8.1	11	**9.0**	±2.0
	Control discharge	7.8	10	8.1	**8.7**	±1.3
	Treated discharge	10	7.8	10	**9.2**	±1.2
No. 2	Inlet control	52	46	38	**45**	±7.0
	Inlet BWMS	46	41	38	**42**	±4.3
	Control discharge	45	44	47	**45**	±1.4
	Treated discharge	44	43	41	**42**	±1.5
No. 3	Inlet control	24	15	7.8	**15**	±8.1
	Inlet BWMS	3.6	3.8	2.5	**3.3**	±0.71
	Control discharge	5.2	5.5	3.8	**4.8**	±0.90
	Treated discharge	7.8	4.5	6.1	**6.2**	±1.6
No. 4	Inlet control	5.0	*	2.6	**3.8**	-
	Inlet BWMS	3.2	1.7	5.8	**3.6**	±2.1
	Control discharge	2.8	2.7	3.0	**2.8**	±0.14
	Treated discharge	3.2	1.2	7.5	**4.0**	±3.2
No. 5	Inlet control	8.3	6.8	9.7	**8.3**	±1.5
	Inlet BWMS	5.0	8.1	3.6	**5.6**	±2.3
	Control discharge	5.8	6.4	4.6	**5.6**	±0.93
	Treated discharge	8.7	6.5	5.8	**7.0**	±1.6
No. 6	Inlet	43	36	29	**36**	±7.0
	Control discharge	17	20	16	**18**	±1.7
	Treated discharge	21	21	22	**21**	±0.51

FR Field replicate
AVG Average
STD Standard deviation
* TSS sample lost

Table E.5.5 Measurements of UV transmittance (UV-T)

Test cycle	Water type	UV-T (%)				
		FR1	FR2	FR3	AVG	STD
No. 1	Inlet control	97	97	96	**97**	±0.58
	Inlet BWMS	95	97	97	**96**	±1.2
	Treated discharge	97	96	96	**96**	±0.58
No. 2	Inlet control	91	95	96	**94**	±2.4
	Inlet BWMS	95	96	96	**96**	±0.40
	Treated discharge	96	95	95	**96**	±0.61
No. 3	Inlet control	95	97	97	**96**	±0.75
	Inlet control 0.2-µm filtered	99	99	99	**99**	±0.04
	Inlet BWMS	96	97	96	**96**	±0.20
	Inlet BWMS 0.2-µm filtered	97	98	*	**98**	-
	Treated discharge	96	95	95	**95**	±0.35
	Treated discharge 0.2-µm filtered	97	98	97	**97**	±0.79
No. 4	Inlet control	90	90	90	**90**	±0.15
	Inlet control 0.2-µm filtered	89	89	90	**89**	±0.34
	Inlet BWMS	90	90	90	**90**	±0.20
	Inlet BWMS 0.2-µm filtered	91	90	90	**91**	±0.61
	Treated discharge	92	90	91	**91**	±0.55
	Treated discharge 0.2-µm filtered	92	92	*	**92**	-
No. 5	Inlet control	85	85	85	**85**	±0.23
	Inlet control 0.2-µm filtered	88	88	88	**88**	±0.21
	Inlet BWMS	85	85	85	**85**	±0.21
	Inlet BWMS 0.2-µm filtered	88	88	89	**88**	±0.61
	Treated discharge	86	86	86	**86**	±0.06
	Treated discharge 0.2-µm filtered	89	89	89	**89**	±0.31
No. 6	Inlet control	59	60	59	**59**	±0.40
	Inlet control 0.2-µm filtered	81	81	82	**81**	±0.23
	Inlet BWMS	60	60	60	**60**	±0.40
	Inlet BWMS 0.2-µm filtered	81	82	82	**82**	±0.21
	Treated discharge	67	66	66	**66**	±0.51
	Treated discharge 0.2-µm filtered	84	84	84	**84**	±0.25

FR Field replicate
AVG Average
STD Standard deviation
* Filtered sample not measured by mistake

APPENDIX F

Process data from statistical analyses of organisms ≥50 µm

Table F.1 Test cycle No. 1

Sample	Vsamp_m3	Subsample	Vsub_m3	Osubsamp	Esubsamp	X2chisq	Pchisq	X2constant	Pconstant	Msample	X2sample	Psample	Vtotal_m3	Mean_m3	Pexact	Pabove
1	3.469	1	0.3273	0	3.273	19.74	0.00616	7.96	0.33613	2.036867	7.04112	0.029583	2.589	1.545	0	1
1	3.469	2	0.3273	2	3.273											
1	3.469	3	0.3273	0	3.273											
2	3.481	1	0.3223	0	3.223					0	9.669	0.007951				
2	3.481	2	0.3223	0	3.223											
2	3.481	3	0.3223	0	3.223											
3	3.456	1	0.32	1	3.2					3.125	3.025	0.08199				
3	3.456	2	0.32	1	3.2											

Desription of Results:
Test to disprove an underlying constant Mean of 10 / m3, given Observed counts (O) and underlying Expected counts (E).
Vsub_m3: Unconcentrated volume of subsamples (in m3).
Esubsamp: Expected counts of subsamples = Proposed Mean * Volume.
X2chisq: Chi-square statistic, SUM((O-E)^2/E), for O vs E in subsamples, with k-1 = 7 degrees of freedom.
Pchisq: p-value is the Probability that O & E of subsamples could differ that much if the proposed mean were true.
Remark: Proposed underlying mean could be rejected for 2 reasons,
1) Mean differs from 10
2) Underlying Mean not constant.

X2constant: Chi-square test that an actual Mean of 1.545 / m3 could be constant across all subsamples.
Pconstant: p-value = Probability that O & E of subsamples could differ that much if a constant mean were true
Remark: If underlying mean does not appear constant then a significant result can still be established across individual samples.
Given the total Volume sampled an exact test is performed using a Poisson distribution with a proposed Mean of 25.89 / 2.589 m3.
Pexact: p-value for test of Mean < 10 / m3 with a probability of 4 counts or less.
Pabove: p-value for test of Mean > 10 / m3 with a probability of 4 counts or more.

Table F.1.2 Test cycle No. 2

Sample	Vsamp_m3	Subsample	Vsub_m3	Osubsamp	Esubsamp	X2chisq	Pchisq	X2constant	Pconstant	Msample	X2sample	Psample	Vtotal_m3	Mean_m3	Pexact	Pabove
1	3.045	1	0.2894	0	2.894	32.31	0.00068			0	10.477	0.014918	3.231	0	0	1
1	3.045	2	0.2489	0	2.489											
1	3.045	3	0.2489	0	2.489											
1	3.045	4	0.2605	0	2.605											
2	3.058	1	0.2427	0	2.427					0	11.771	0.00821				
2	3.058	2	0.3276	0	3.276											
2	3.058	3	0.3034	0	3.034											
2	3.058	4	0.3034	0	3.034											
3	3.064	1	0.1879	0	1.879					0	10.064	0.01803				
3	3.064	2	0.2371	0	2.371											
3	3.064	3	0.2236	0	2.236											
3	3.064	4	0.3578	0	3.578											

Desription of Results:
Test to disprove an underlying constant Mean of 10 / m3, given Observed counts (O) and underlying Expected counts (E).
Vsub_m3: Unconcentrated volume of subsamples (in m3).
Esubsamp: Expected counts of subsamples = Proposed Mean * Volume.
X2chisq: Chi-square statistic, SUM((O-E)^2/E), for O vs E in subsamples, with k-1 = 11 degrees of freedom.
Pchisq: p-value is the Probability that O & E of subsamples could differ that much if the proposed mean were true.
Remark: Proposed underlying mean could be rejected for 2 reasons,
1) Mean differs from 10
2) Underlying Mean not constant.
X2constant: Chi-square test that an actual Mean of 0 / m3 could be constant across all subsamples.
Pconstant: p-value = Probability that O & E of subsamples could differ that much if a constant mean were true
Remark: If underlying mean does not appear constant then a significant result can still be established across individual samples.
Given the total Volume sampled an exact test is performed using a Poisson distribution with a proposed Mean of 32.31 / 3.231 m3.
Pexact: p-value for test of Mean < 10 / m3 with a probability of 0 counts or less.
Pabove: p-value for test of Mean > 10 / m3 with a probability of 0 counts or more.

Table F.1.3 Test cycle No. 3

Sample	Vsamp_m3	Subsample	Vsub_m3	Osubsamp	Esubsamp	X2chisq	Pchisq	X2constant	Pconstant	Msample	X2sample	Psample	Vtotal_m3	Mean_m3	Pexact	Pabove
1	3.02	1	0.1452	0	1.452	16.31	0.0911			0	5.808	0.121334	1.631	0	0	1
1	3.02	2	0.1452	0	1.452											
1	3.02	3	0.1452	0	1.452											
1	3.02	4	0.1452	0	1.452											
2	3.06	1	0.15	0	1.5					0	6	0.11161				
2	3.06	2	0.15	0	1.5											
2	3.06	3	0.15	0	1.5											
2	3.06	4	0.15	0	1.5											
3	3.03	1	0.15	0	1.5					0	4.5	0.105399				
3	3.03	2	0.15	0	1.5											
3	3.03	3	0.15	0	1.5											

Desription of Results:
Test to disprove an underlying constant Mean of 10 / m3, given Observed counts (O) and underlying Expected counts (E).
Vsub_m3: Unconcentrated volume of subsamples (in m3).
Esubsamp: Expected counts of subsamples = Proposed Mean * Volume.
X2chisq: Chi-square statistic, SUM((O-E)^2/E), for O vs E in subsamples, with k-1 = 10 degrees of freedom.
Pchisq: p-value is the Probability that O & E of subsamples could differ that much if the proposed mean were true.
Remark: Proposed underlying mean could be rejected for 2 reasons,
1) Mean differs from 10
2) Underlying Mean not constant.
X2constant: Chi-square test that an actual Mean of 0 / m3 could be constant across all subsamples.
Pconstant: p-value = Probability that O & E of subsamples could differ that much if a constant mean were true
Remark: If underlying mean does not appear constant then a significant result can still be established across individual samples.
Given the total Volume sampled an exact test is performed using a Poisson distribution with a proposed Mean of 16.31 / 1.631 m3.
Pexact: p-value for test of Mean < 10 / m3 with a probability of 0 counts or less.
Pabove: p-value for test of Mean > 10 / m3 with a probability of 0 counts or more.

Table F.1.4 Test cycle No. 4

Sample	Vsamp_m3	Subsample	Vsub_m3	Osubsamp	Esubsamp	X2chisq	Pchisq	X2constant	Pconstant	Msample	X2sample	Psample	Vtotal_m3	Mean_m3	Pexact	Pabove
1	3.01	1	0.1601	0	1.601	13.34	0.14782	14.55	0.10406	0	6.404	0.093526	1.607	1.867	9.00E-05	0.99998
1	3.01	2	0.1601	0	1.601											
1	3.01	3	0.1601	0	1.601											
1	3.01	4	0.1601	0	1.601											
2	3.02	1	0.148	0	1.48					4.504505	3.142703	0.207764				
2	3.02	2	0.148	2	1.48											
2	3.02	3	0.148	0	1.48											
3	3.03	1	0.1741	0	1.741					1.914608	3.797383	0.149764				
3	3.03	2	0.1741	1	1.741											
3	3.03	3	0.1741	0	1.741											

Desription of Results:
Test to disprove an underlying constant Mean of 10 / m3, given Observed counts (O) and underlying Expected counts (E).
Vsub_m3: Unconcentrated volume of subsamples (in m3).
Esubsamp: Expected counts of subsamples = Proposed Mean * Volume.
X2chisq: Chi-square statistic, SUM((O-E)^2/E), for O vs E in subsamples, with k-1 = 9 degrees of freedom.
Pchisq: p-value is the Probability that O & E of subsamples could differ that much if the proposed mean were true.
Remark: Proposed underlying mean could be rejected for 2 reasons,
1) Mean differs from 10
2) Underlying Mean not constant.
X2constant: Chi-square test that an actual Mean of 1.867 / m3 could be constant across all subsamples.
Pconstant: p-value = Probability that O & E of subsamples could differ that much if a constant mean were true
Remark: If underlying mean does not appear constant then a significant result can still be established across individual samples.
Given the total Volume sampled an exact test is performed using a Poisson distribution with a proposed Mean of 16.07 / 1.607 m3.

Pexact: p-value for test of Mean < 10 / m3 with a probability of 3 counts or less.

Pabove: p-value for test of Mean > 10 / m3 with a probability of 3 counts or more.

Table F.1.5 Test cycle No. 5

Sample	Vsamp_m3	Subsample	Vsub_m3	Osubsamp	Esubsamp	X2chisq	Pchisq	X2constant	Pconstant	Msample	X2sample	Psample	Vtotal_m3	Mean_m3	Pexact	Pabove
1	3.11	1	0.3019	24	3.019	1381.75	0	3.52	0.62036	94.40212	443.5451	0	1.749	97.77	1	0
1	3.11	2	0.3019	33	3.019											
2	3.13	1	0.2845	23	2.845					94.90334	421.4158	0				
2	3.13	2	0.2845	31	2.845											
3	3.14	1	0.2881	33	2.881					104.1305	516.7929	0				
3	3.14	2	0.2881	27	2.881											

Desription of Results:
Test to disprove an underlying constant Mean of 10 / m3, given Observed counts (O) and underlying Expected counts (E).
Vsub_m3: Unconcentrated volume of subsamples (in m3).
Esubsamp: Expected counts of subsamples = Proposed Mean * Volume.
X2chisq: Chi-square statistic, SUM((O-E)^2/E), for O vs E in subsamples, with k-1 = 5 degrees of freedom.
Pchisq: p-value is the Probability that O & E of subsamples could differ that much if the proposed mean were true.
Remark: Proposed underlying mean could be rejected for 2 reasons,
1) Mean differs from 10
2) Underlying Mean not constant.
X2constant: Chi-square test that an actual Mean of 97.77 / m3 could be constant across all subsamples.
Pconstant: p-value = Probability that O & E of subsamples could differ that much if a constant mean were true
Remark: If underlying mean does not appear constant then a significant result can still be established across individual samples.
Given the total Volume sampled an exact test is performed using a Poisson distribution with a proposed Mean of 17.49 / 1.749 m3.
Pexact: p-value for test of Mean < 10 / m3 with a probability of 171 counts or less.
Pabove: p-value for test of Mean > 10 / m3 with a probability of 171 counts or more.

Table F.1.6 Test cycle No. 6

Sample	Vsamp_m3	Subsample	Vsub_m3	Osubsamp	Esubsamp	X2chisq	Pchisq	X2constant	Pconstant	Msample	X2sample	Psample	Vtotal_m3	Mean_m3	Pexact	Pabove
1	3.08	1	0.6235	1	6.235	19.56	0.01214	20.31	0.00922	1.603849	13.50692	0.001167	5.977	7.027	0.0098	0.99342
1	3.08	2	0.6235	0	6.235											
1	3.08	3	0.6235	2	6.235											
2	3.07	1	0.7224	5	7.224					10.15135	2.865798	0.238616				
2	3.07	2	0.7224	6	7.224											
2	3.07	3	0.7224	11	7.224											
3	3.09	1	0.6464	3	6.464					8.766502	3.182842	0.203636				
3	3.09	2	0.6464	5	6.464											
3	3.09	3	0.6464	9	6.464											

Desription of Results:
Test to disprove an underlying constant Mean of 10 / m3, given Observed counts (O) and underlying Expected counts (E).
Vsub_m3: Unconcentrated volume of subsamples (in m3).
Esubsamp: Expected counts of subsamples = Proposed Mean * Volume.
X2chisq: Chi-square statistic, SUM((O-E)^2/E), for O vs E in subsamples, with k-1 = 8 degrees of freedom.
Pchisq: p-value is the Probability that O & E of subsamples could differ that much if the proposed mean were true.
Remark: Proposed underlying mean could be rejected for 2 reasons,
1) Mean differs from 10
2) Underlying Mean not constant.
X2constant: Chi-square test that an actual Mean of 7.027 / m3 could be constant across all subsamples.
Pconstant: p-value = Probability that O & E of subsamples could differ that much if a constant mean were true
Remark: If underlying mean does not appear constant then a significant result can still be established across individual samples.
Given the total Volume sampled an exact test is performed using a Poisson distribution with a proposed Mean of 59.77 / 5.977 m3.
Pexact: p-value for test of Mean < 10 / m3 with a probability of 42 counts or less.
Pabove: p-value for test of Mean > 10 / m3 with a probability of 42 counts or more.

APPENDIX G

Investigation of the unsuccessful shipboard test No. 5

Report

Subject	Ref. No	Version	Security	Pag
Investigation of the unsuccessful shipboard test no. 5	AW13-149	2	-	1/4

Department	Date	Issued by
AlfaWall	2013-12-18	PBN

Ref: USCG § 162.060–28 Shipboard testing requirements (G)

(3) All test cycles, even those in which the BWMS failed to meet the BWDS, must be documented. The possible reasons for an unsuccessful test cycle must be investigated and included in the Test Report.

Background

The number of viable organisms ≥10 and <50 µm in the discharge water did meet the requirements but the number of viable organisms ≥50 µm did not meet the discharge requirements at ship board test number 5. This was due to remaining untreated (contaminated) water in the ballast tanks used in shipboard test number 5.

	Inlet, control	Inlet, treatment	Control discharge	Treated discharge
organisms ≥10 and <50 µm				
Requirements	**>100**	**>100**	**≥10**	**<10**
MPN (org/mL)	>160	>160	>160	0,19
Staining (org/mL)	**240**	**180**	**256**	**5,4**
organisms ≥50				
Requirements	**>100**	**>100**	**≥10**	**<10**
(org/m^3)	**77 052**	**61 092**	**60 372**	**98**

Table 1 Average concentration of viable organisms' shipboard test #5

Remaining untreated contaminated water in ballast tanks

Shipboard test number 5 was performed 2013-09-13 and the previous shipboard test number 4 was performed approximately 5 months earlier 2013-04-18. In this interval, the designated ballast tanks had been contaminated with untreated water. In preparation for shipboard test number 5, the ship's crew was asked to empty and fill designated ballast water tanks with treated water a number of times on the voyage from North America to Europe where the test was scheduled to take place. This could not be performed due to a system error when starting PureBallast BWMS (ref. Adjustment and service log 2013.08.26). The error could not be corrected by the crew as correct spare parts were not available on board. A faulty safety relay (-KS3 in LDC cabinet) caused the fault. The broken relay was changed when the ship arrived at Bremerhaven 2013-09-11.

In Bremerhaven cargo operation and service work prevented any operation of ballast treatment system; yard changed hand maneuvered vales V/V No.1 and V/V No.2 in the ballast piping to remote controlled and monitored valves. The BWMS system could first be tested after the failed relay was replaced the following day 2013-09-12 when vessel left Bremerhaven and was headed for Zeebrugge. The ballast water tanks possible to use for the shipboard tests still contained untreated contaminated water. The only action possible to complete before the vessel approached Zeebrugge and pilot came on board was to empty the dedicated ballast water tanks with the regular ballast pump, stripping ejector were not applied due to time limitation. There was no time to fill and empty the tanks with treated water. This meant that a considerable amount of untreated water was left in the tanks when test number five was performed which also is indicated in the test results.

The extent of remaining untreated water in the ballast tanks did not become clear to us until we got the data from the test as the vessels volume monitoring of ballast tanks is uncertain at low filling levels in the tanks. The effect of remaining untreated water in ballast water tanks affects the reduction of larger organisms (≥50 µm) more than the reduction of smaller organisms (≥10 and <50 µm) which also the results from shows; as the filtration process is completely by-passed.

Shipboard Test # 5 was performed in the port of Zeebrugge (inside lock) 2013-09-13 and started as soon as the vessel moored (early morning) to be able to complete both intake and discharge cycles before the vessel was scheduled to leave Zeebrugge and head back to North America on another 4 week cycle, hence there no time to flush the tanks with treated water.

Estimate of how much untreated water that was left in the tanks

All tanks used for the test was double bottom tanks with relative flat bottom. The suction pipes orifice ends some distance above the tank bottom against a double plate resulting in a residual amount of water when the tank is emptied. If a conventional centrifugal pump is used to empty the tank, it will suck air and lose suction just before the water level reaches the end of the pipe. The residual water level in the tank after draining a tank using the ballast pump (centrifugal pump) is estimated to be at least 0,1-0,2 m, in reality probably more considering the internal structure of a ballast tank, the ships trim, list and movement. A conservative estimate is that 0.1 m of water was left in the tanks which are equivalent to **43 m^3** in No. 4 tanks that were used to treated water and **20 m^3** in No. 5 tanks that were used to control water.

Tank	Tank volume	Data from mimic 2013-03-13 (ref. 385FIST130313-1)	Relation filling height vs. volume
Tanks used for treated water			
No.4 DB (P)	216 m^3	Water level 0,75 m equals 51 m^3	→ 0,1 m ≈ 6 m^3
No.4 DB (C)	866 m^3	Water level 1,25 m equals 387 m^3	→ 0,1 m ≈ 30 m^3
No.4 DB (S)	255 m^3	Water level 1,21 m equals 95 m^3	→ 0,1 m ≈ 7 m^3
			≈ ∑ 43 m^3
Tanks used for control water			
No.5 DB (P)	211 m^3	Water level 1,91 m equals 182m^3	→ 0,1 m ≈ 10 m^3
No.5 DB (C)	211 m^3	Water level 2,06 m equals 204 m^3	→ 0,1 m ≈ 10 m^3
			≈ ∑ 20 m^3

Table 2 Estimation of residual water in ballast water tanks

Estimate of how many larger organisms untreated water in tanks contain

Residual water in tanks can be expected to originate from intake out on open sea or at least no uptake in harbor as the crew tries to avoid that if possibly to avoid sediment build up in tanks. At test 1-4 of the six performed shipboard tests, intake of water was performed on route or drifting. The density of larger organisms remaining in the residual water can be assumed to correspond to the density in the control discharge water at these shipboard tests; they have a similar origin and have been subjected to similar treatment (pumping and storage in tank).

organisms ≥50 organisms ≥50 µm				
Shipboard test	**# 1**	**# 2**	**# 3**	**# 4**
Control discharge (org/m^3)	**4 554**	**9 897**	**1 125**	**24 357**

Table 3 Average concentration of viable organisms' control discharge water

Residual water in a ballast tank consists of a mix of waters loaded at different occasions and the organism density should be an average of those waters. Based on the densities in control discharge water at test 1-4, the density in the residual water is estimated to be at least 5000 org/m^3. At discharge the viability of these organisms will decrease as they are exposed to one UV treatment when they pass the AOT reactor. The direct measurable effect of this treatment on large organisms is limited, at most 50% reduction; resulting in ≈ 2500 viable organisms in the residual water.

This volume of untreated residual water was mixed with the treated volume during ballast (intake) which was 784 m^3 at shipboard test #5. The organisms originating from the residual water corresponds to an organism density of ((2500x42)/(784+43)) ≈ **130 viable org./m^3**. This agrees reasonably well with the discharge results at the shipboard test No. 5.

Test data supporting the assumption that contaminated water remained in tanks

DHI staff carrying out the shipboard sampling and analyses on board noted that most of the larger organisms (≥50 µm) observed in the analyzed treated discharge samples were found to be Harpacticoida copepods (based on an average from three replicates). This type of organisms was not observed in the inlet samples. The observed Harpacticoida were measured and found to be of the approximate dimensions of either 70 x 500 µm; 150 x 550 µm or 80 x 300 µm. PureBallast 3.0 BWMS is equipped with a mechanical filter equipped with 50x50 µm filter mesh. We know from experience that a filter can pass organisms slightly larger than the mesh openings, but not at all large organisms as in this case. Furthermore, even any smaller copepods of this type that are pressed through a filter mesh will exhibit damage shape like broken antennas etc.

Later the filter was opened and inspected (ref. Adjustment and service log 2013.10.09), no corrosion or damages was found inside the filter or on the filter inserts. The following shipboard test #6 conducted 2013-10-15 after the tanks been flushed with treated water met the required discharge standard for all organism groups.

Test data from shipboard test No. 5 shows that the indicator microbes Enterococci and E. Coli concentration in the control discharge water compared to control inlet water increased more than what can be explained by natural growth considering the short time between intake and discharge; about 8 hours between intake control and discharge control. This increase of microbes is not present in the treated discharge water as the UV treatment at discharge very efficiently lowers the level of microbes.

Test cycle	Water type	Enterococci (CFU/100mL)				
		FR1	FR2	FR3	AVG	STD
No.5	Inlet, control	<10	<10	<10	**<10**	
	Control discharge	180	360	210	**250**	± 96
Test cycle	Water type	E. coli (CFU/100mL)				
		FR1	FR2	FR3	AVG	STD
No.5	Inlet, control	53	10	32	**32**	± 22
	Control discharge	210	340	320	**290**	± 70

Table 3 Enumeration of enterococci and E. coli, shipboard test #5

Test data from shipboard test No. 5 shows that the TSS and MM concentration and in the discharge water differs significantly from the levels at intake. This clearly shows that the intake water was mixed with a considerable amount of untreated water that was left in the tanks.

Test cycle	Water type	FR1	FR2	FR3	AVG	STD
	TSS (mg/L)					
No.5	Inlet, control	8,5	7,2	9,9	**8,5**	± 1,4
	Inlet, treatment	5,1	8,2	3,8	**5,7**	± 2,3
	Control discharge	6,2	6,6	4,8	**5,9**	± 0,95
	Treated discharge	8,9	6,6	5,9	**7,1**	± 1,6
	MM (mg/L)					
	Inlet, control	8,3	6,8	9,7	**8,3**	± 1,5
	Inlet, treatment	5,0	8,1	3,6	**5,6**	± 2,3
	Control discharge	5,8	6,4	4,6	**5,6**	± 0,93
	Treated discharge	8,7	6,5	5,8	**7,0**	± 1,6

Table 4 Measurement of total suspended solids (TSS) and mineral matter (MM), shipboard test #5

APPENDIX H

Quality control and quality assurance for performance evaluation in shipboard testing with PureBallast 3.0

Quality control and quality assurance	Description	Overall responsible
Quality control, data from laboratory analyses and database entries	All results related to samples and laboratory analyses are stored in relevant databases. All data entries in databases have been quality controlled. Laboratory records are filed in the DHI archives.	Last data entry 19 November 2013 Camilla Hedberg
Quality control, onsite data from shipboard testing	Onsite data records are filed in the DHI archives.	Filing of onsite data records 19 November 2013 Camilla Hedberg
Quality control, interim test cycle reports	All data related to a specific test cycle have been reported in interim test cycle reports except for test cycle No. 6, which was only reported in the final report. Reports have been written by members of the project team upon completion of quality control of all data sets. Each interim test cycle report has been quality controlled.	Quality control last interim report (Test cycle No. 5) 28 October 2013 Torben Madsen
Quality control, final report	Data and data interpretation related to the present performance evaluation have been quality controlled, and all data are truly and accurately presented in the final report.	Quality control, final report 13 January 2014 Torben Madsen
Quality assurance (final report)	The performance evaluation during shipboard testing for PureBallast 3.0 complies with the conditions outlined in the QMP, QAPP and SOPs. The performance evaluation was conducted in compliance with the IMO G8 guidelines and ETV protocol.	Quality assurance of project 4 February 2014 Louise Schlüter