SEMS-RM DOCID # 1159012

JS-6

JOHN C. CRUDEN
Assistant Attorney General
Environment and Natural Resources Division

CHERYL ANN LUKE, Va. Bar Number: 26331
Environmental Enforcement Section
Environment and Natural Resources Division
United States Department of Justice
P.O. Box 7611
Washington, D.C. 20044-7611
Telephone: (202) 514-5466
Fax: (202) 616-2427
Email: cheryl.luke@usdoj.gov

Attorneys for Plaintiff United States of America

(See additional parties on next page)

UNITED STATES DISTRICT COURT
CENTRAL DISTRICT OF CALIFORNIA
WESTERN DIVISION

UNITED STATES OF AMERICA, and STATE OF CALIFORNIA DEPARTMENT OF TOXIC SUBSTANCES CONTROL,	)	CIV. NO.: 2:15-cv-09931 AB(FFMx)
Plaintiffs,	)	
v.	)	CONSENT DECREE
AC PRODUCTS, INC., et al.	)	
Defendants.	)	

KAMALA D. HARRIS
Attorney General of California

SARAH E. MORRISON, State Bar No. 143459
Supervising Deputy Attorney General

OLIVIA W. KARLIN, State Bar No. 150432
Deputy Attorney General
300 South Spring Street, Suite 1702
Los Angeles, CA 90013
Telephone: (213) 897-0473
Fax: (213) 897-2802
E-Mail: olivia.karlin@doj.ca.gov

Attorneys for Plaintiff State of California Department of Toxic Substances Control

TABLE OF CONTENTS

I. BACKGROUND 5
II. JURISDICTION 8
III. PARTIES BOUND 8
IV. DEFINITIONS 9
V. GENERAL PROVISIONS 15
VI. PERFORMANCE OF THE WORK BY PERFORMING SETTLING DEFENDANTS 18
VII. REMEDY REVIEW 29
VIII. QUALITY ASSURANCE, SAMPLING AND DATA ANALYSIS 31
IX. ACCESS AND INSTITUTIONAL CONTROLS 33
X. REPORTING REQUIREMENTS 36
XI. EPA APPROVAL OF PLANS AND OTHER SUBMISSIONS 39
XII. PROJECT COORDINATORS 40
XIII. PERFORMANCE GUARANTEE 42
XIV. CERTIFICATE OF COMPLETION 50
XV. EMERGENCY RESPONSE 53
XVI. PAYMENTS FOR RESPONSE COSTS 54
XVII. INDEMNIFICATION AND INSURANCE 61
XVIII. FORCE MAJEURE 64
XIX. DISPUTE RESOLUTION 66
XX. STIPULATED PENALTIES 70
XXI. COVENANTS BY PLAINTIFFS 75
XXII. COVENANTS BY SETTLING DEFENDANTS 81
XXIII. EFFECT OF SETTLEMENT; CONTRIBUTION PROTECTION 84
XXIV. ACCESS TO INFORMATION 86
XXV. RETENTION OF RECORDS 87

XXVI. NOTICES AND SUBMISSIONS 89
XXVII. RETENTION OF JURISDICTION 92
XXVIII. APPENDICES.....92
XXIX. COMMUNITY INVOLVEMENT 93
XXX. MODIFICATION.....93
XXXI. LODGING AND OPPORTUNITY FOR PUBLIC COMMENT 94
XXXII. SIGNATORIES/SERVICE 94
XXXIII. TERMINATION OF ORDER 95
XXXIV. FINAL JUDGMENT 95

I. BACKGROUND

A. The United States of America ("United States"), on behalf of the Administrator of the United States Environmental Protection Agency ("EPA"), and the State of California Department of Toxic Substances Control ("DTSC") (collectively "Plaintiffs") filed a complaint in this matter pursuant to Sections 106 and 107 of the Comprehensive Environmental Response, Compensation, and Liability Act ("CERCLA"), 42 U.S.C. §§ 9606, 9607 ("Complaint").

B. The Plaintiffs' Complaint seeks, inter alia: (1) reimbursement of costs incurred by EPA and the Department of Justice ("DOJ") and by DTSC for response actions at the Cooper Drum Company Superfund Site ("Site") in South Gate, Los Angeles County, California, together with accrued interest; and (2) performance of response actions by defendants at the Site consistent with the National Contingency Plan, 40 C.F.R. Part 300 ("NCP").

C. In accordance with the NCP and Section 121(f)(1)(F) of CERCLA, 42 U.S.C. § 9621(f)(1)(F), EPA notified the DTSC in July 2010 of negotiations with potentially responsible parties regarding the implementation of the remedial design and remedial action for the Site, and EPA has provided DTSC with an opportunity to participate in such negotiations and to be a party to the Complaint and to this Consent Decree.

D. DTSC thereafter joined the United States' Complaint alleging that the defendants are liable to the State of California Department of Toxic Substances Control under Section 107 of CERCLA, 42 U.S.C. §9607, and Health and Safety Code Sections 25358.3 and 25360.

E. The defendants who have entered into this Consent Decree ("Settling Defendants") do not admit any liability to Plaintiffs arising out of the transactions or occurrences alleged in the Complaint, nor do they acknowledge that the release or threatened release of hazardous substances at or from the Site constitutes an

imminent and substantial endangerment to public health or welfare or the environment.

F. Pursuant to Section 105 of CERCLA, 42 U.S.C. § 9605, EPA placed the Site on the National Priorities List, set forth at 40 C.F.R. Part 300, Appendix B, by publication in the Federal Register in June 2001, 49 Fed. Reg. 40,320.

G. In response to a release or substantial threat of a release of hazardous substances at or from the Site, EPA undertook a Remedial Investigation and Feasibility Study ("RI/FS") for the Site from 1996 to 2001 pursuant to 40 C.F.R. § 300.430.

H. EPA completed a Remedial Investigation and Feasibility Study Report on May 15, 2002.

I. Pursuant to Section 117 of CERCLA, 42 U.S.C. § 9617, EPA published notice of the completion of the RI/FS and of the proposed plan for remedial action in June 2002, in a major local newspaper of general circulation. EPA provided an opportunity for written and oral comments from the public on the proposed plan for remedial action. A copy of the transcript of the public meeting is available to the public as part of the administrative record upon which the Regional Administrator, EPA Region IX, based the selection of the response action.

J. The decision by EPA on the remedial action to be implemented at the Site is embodied in a final Record of Decision ("ROD"), executed on September 27, 2002, on which DTSC had a reasonable opportunity to review and comment. Both the Remedial Investigation Feasibility Study (URS, May 2002) and the ROD acknowledge that groundwater at the Site has been impacted by upgradient off-site releases of chemicals of concern ("COCs") that are unrelated to the Site or historical Site activities. Additionally, EPA added two adjacent sites to the National Priorities List. The ROD includes a responsiveness summary to the public comments. Notice of the final plan was published in accordance with

Section 117(b) of CERCLA, 42 U.S.C. § 9617(b). The ROD is attached as Appendix A.

K. On September 21, 2007, EPA completed two Remedial Design Reports containing the Remedial Designs for the Remedial Action for soils and groundwater at the Site.

L. On February 11, 2009, EPA issued Unilateral Administrative Order 2009-07 (the "Order") to 43 recipients requiring the recipients to conduct the Remedial Action at the Site pursuant to the ROD and the Remedial Designs. In compliance with the Order, certain of the recipients formed the Cooper Drum Cooperating Parties Group (the "Group") and, since 2009, the Group has been performing work pursuant to the Order.

M. Based on the information presently available to EPA, EPA believes that the Work will be properly and promptly conducted by Performing Settling Defendants if conducted in accordance with the requirements of this Consent Decree and its appendices.

N. Solely for purposes of Section 113(j) of CERCLA, 42 U.S.C. § 9613(j), the remedy set forth in the ROD and the Work to be performed by Performing Settling Defendants shall constitute a response action taken or ordered by the President for which judicial review shall be limited to the administrative record.

O. The United States has reviewed the financial information submitted by the Ability-to-Pay Settling Defendants to determine whether the Ability-to-Pay Settling Defendants are financially able to pay response costs incurred and to be incurred at the Site. Based upon this financial information, the United States has determined that the Ability-to-Pay Settling Defendants are able to pay the amounts required under this Consent Decree.

P. The United States has reviewed available evidence relating to the volumes and toxicity of wastes at the Site attributable to the known potentially responsible

parties and has determined that the De Minimis Settling Defendants meet the criteria of Section 122(g)(1)(A) of CERCLA, 42 U.S.C. § 9622(g)(1)(A).

Q. The Parties recognize, and this Court by entering this Consent Decree finds, that this Consent Decree has been negotiated by the Parties in good faith and implementation of this Consent Decree will expedite the cleanup of the Site and will avoid prolonged and complicated litigation among the Parties, and that this Consent Decree is fair, reasonable, and in the public interest.

NOW, THEREFORE, it is hereby Ordered, Adjudged, and Decreed:

II. JURISDICTION

1. This Court has jurisdiction over the subject matter of this action pursuant to 28 U.S.C. §§ 1331 and 1345 and 42 U.S.C. §§ 9607 and 9613(b) and also has personal jurisdiction over Settling Defendants. Solely for the purposes of this Consent Decree and the underlying Complaint, Settling Defendants waive all objections and defenses that they may have to jurisdiction of the Court or to venue in this District. Settling Defendants shall not challenge the terms of this Consent Decree or this Court's jurisdiction to enter and enforce this Consent Decree.

III. PARTIES BOUND

2. This Consent Decree applies to and is binding upon the United States and DTSC and upon Settling Defendants and their heirs, successors and assigns. Any change in ownership or corporate status of a Settling Defendant, including, but not limited to, any transfer of assets or real or personal property, shall in no way alter such Settling Defendant's responsibilities under this Consent Decree.

3. Performing Settling Defendants shall provide a copy of this Consent Decree to each contractor hired to perform the Work required by this Consent Decree and to each person representing Performing Settling Defendants with respect to the Site or the Work, and shall condition all contracts entered into hereunder upon performance of the Work in conformity with the terms of this Consent Decree. Performing Settling Defendants or their contractors shall provide

written notice of the Consent Decree to all subcontractors hired to perform any portion of the Work required by this Consent Decree. Performing Settling Defendants shall nonetheless be responsible for ensuring that their contractors and subcontractors perform the Work in accordance with the terms of this Consent Decree. With regard to the activities undertaken pursuant to this Consent Decree, each contractor and subcontractor shall be deemed to be in a contractual relationship with Performing Settling Defendants within the meaning of Section 107(b)(3) of CERCLA, 42 U.S.C. § 9607(b)(3).

IV. DEFINITIONS

4. Unless otherwise expressly provided herein, terms used in this Consent Decree that are defined in CERCLA or in regulations promulgated under CERCLA shall have the meaning assigned to them in CERCLA or in such regulations. Whenever terms listed below are used in this Consent Decree or its appendices, the following definitions shall apply solely for purposes of this Consent Decree:

a. "Ability-to-Pay Settling Defendants" shall mean those Settling Defendants identified in Appendix F as Ability-to-Pay Settling Defendants.

b. "CERCLA" shall mean the Comprehensive Environmental Response, Compensation, and Liability Act, 42 U.S.C. §§ 9601-9675.

c. "Consent Decree" shall mean this Consent Decree and all appendices attached hereto (listed in Section XXVIII). In the event of conflict between this Consent Decree and any appendix, this Consent Decree shall control.

d. "Consent Decree ROD Amendment" shall mean an amendment to the ROD pursuant to Paragraph 11(c)(i)(A)(1)or(2) that changes the OU1 Phase 2 remedial action either to Monitored Natural Attenuation or to the alternative Remedial Action recommended by

Performing Settling Defendants after conclusion of the Focused Feasibility Study and selected by EPA.

e. "Contributing Settling Defendants" shall mean those Settling Defendants identified in Appendix H as Contributing Settling Defendants.

f. "Day" shall mean a calendar day unless expressly stated to be a working day. The term "working day" shall mean a day other than a Saturday, Sunday, or federal or state holiday. In computing any period of time under this Consent Decree, where the last day would fall on a Saturday, Sunday, or federal or state holiday, the period shall run until the close of business of the next working day.

g. "De Minimis Settling Defendants" shall mean those Settling Defendants identified in Appendix G as De Minimis Settling Defendants.

h. "DOJ" shall mean the United States Department of Justice and its successor departments, agencies or instrumentalities.

i. "DTSC" shall mean the State of California Department of Toxic Substances Control, its officers, employees and representatives, all of its divisions and branches, and any predecessor or successor agency in interest, including the California Toxic Substances Control Account to the extent that funds from that account, or predecessors to that account, have been, or will be, expended on behalf of DTSC. The Toxic Substances Control Account is successor in interest to the following accounts: The California Hazardous Substances Account; The California Hazardous Waste Control Account; and The California Site Remediation Account.

j. "Effective Date" shall mean the date upon which this Consent Decree is entered by the Court as recorded on the Court docket, or, if the Court instead issues an order approving the Consent Decree, the date such order is recorded on the Court docket.

k. "EPA" shall mean the United States Environmental Protection Agency and its successor departments, agencies or instrumentalities.

l. "EPA Hazardous Substance Superfund" shall mean the Hazardous Substance Superfund established by the Internal Revenue Code, 26 U.S.C. § 9507.

m. "EPA Remedial Design" shall mean those activities previously undertaken by EPA and completed on September 21, 2007, to develop the design, plans and specifications for the Remedial Action for the Site.

n. "EPA Remedial Design Reports" shall mean the reports containing the Remedial Designs for soils and groundwater at the Site completed by EPA in September 2007 and attached hereto as Appendix D.

o. "Future Response Costs" shall mean all costs incurred after the Effective Date, including, but not limited to, direct and indirect costs that the Plaintiffs incur in reviewing or developing plans, reports, and other deliverables submitted pursuant to this Consent Decree, in overseeing implementation of the Work, or otherwise implementing, overseeing, or enforcing this Consent Decree, including, but not limited to, payroll costs, contractor costs, travel costs, and laboratory costs. Future Response Costs include the costs incurred pursuant to Section VII (Remedy Review), and Section IX (Access and Institutional Controls), including, but not limited to, the cost of attorney time and any monies paid to secure access and/or to secure, implement, monitor, maintain, or enforce Institutional Controls (including, but not limited to, the amount of just compensation), Section XV (Emergency Response), Paragraph 47 (Funding for Work Takeover), and Section XXIX (Community Involvement).

p. "Gaspur" or "Gaspur aquifer" shall mean the aquifer immediately beneath the Bellflower aquiclude and extending vertically to a depth of approximately 115 ft bgs.

q. "Group" shall mean the Cooper Drum Cooperating Parties Group.

r. "Institutional Controls" or "ICs" shall mean proprietary controls and state or local laws, regulations, ordinances, zoning restrictions, or other governmental controls or notices that: (a) limit land, water, and/or resource use to minimize the potential for human exposure to Waste Material at or in connection with the Site; (b) limit land, water and/or resource use to ensure non-interference with or ensure the protectiveness of the Remedial Action; and/or (c) provide information intended to modify or guide human behavior at or in connection with the Site.

s. "Interest" for EPA shall mean interest at the rate specified for interest on investments of the EPA Hazardous Substance Superfund established by 26 U.S.C. § 9507, compounded annually on October 1 of each year, in accordance with 42 U.S.C. § 9607(a). The applicable rate of interest shall be the rate in effect at the time the interest accrues. The rate of interest is subject to change on October 1 of each year. Interest for DTSC shall mean the interest at the rate specified in California Health and Safety Code § 25360.1.

t. "Interim Response Costs" shall mean all costs as defined in Paragraph 4.o. ("Future Response Costs"), above, incurred by the United States between April 1, 2011, and the Effective Date or incurred by DTSC between December 21, 2012, and the Effective Date.

u. "National Contingency Plan" or "NCP" shall mean the National Oil and Hazardous Substances Pollution Contingency Plan promulgated pursuant to Section 105 of CERCLA, 42 U.S.C. § 9605, codified at 40 C.F.R. Part 300, and any amendments thereto.

v. "Operation and Maintenance" or "O&M" shall mean all activities required to maintain the effectiveness of the Remedial Action as

required under the Operation and Maintenance Plan approved by EPA pursuant to Section VI (Performance of the Work by Performing Settling Defendants) and the Statement of Work ("SOW").

w. "Order" shall mean the Unilateral Administrative Order 2009-07 issued by EPA on February 11, 2009.

x. "Paragraph" shall mean a portion of this Consent Decree identified by an Arabic numeral or an upper or lower case letter.

y. "Parties" shall mean the United States, DTSC and Settling Defendants.

z. "Past Response Costs" shall mean all costs, including, but not limited to, direct and indirect costs, that the United States incurred at or in connection with the Site through March 31, 2011, and that DTSC incurred at or in connection with the Site through December 20, 2012, plus Interest on such costs that accrued pursuant to 42 U.S.C. § 9607(a) through such date.

aa. "Performance Standards" shall mean the cleanup standards and other measures of achievement of the goals of the Remedial Action set forth in the ROD, Consent Decree ROD Amendment(s), and the SOW and any modified standards established pursuant to this Consent Decree.

bb. "Performing Settling Defendants" or "PSDs" are those Settling Defendants identified in Appendix I as Performing Settling Defendants.

cc. "Plaintiffs" shall mean the United States and DTSC.

dd. "RCRA" shall mean the Solid Waste Disposal Act, 42 U.S.C. §§ 6901-6992 (also known as the Resource Conservation and Recovery Act).

ee. "Record of Decision" or "ROD" shall mean the EPA Record of Decision relating to the Site signed on September 27, 2002, by the Regional Administrator, EPA Region IX, or his delegate, and all attachments thereto. The ROD is attached as Appendix A.

ff. "ROD Amendment" shall mean an amendment to the ROD that fundamentally alters the basic features of a selected remedy in the ROD and is adopted pursuant to the provisions of 40 C.F.R § 300.435(c)(2)(ii)(A-H). The term "ROD Amendment" shall include the amended Statement of Work which implements the ROD Amendment.

gg. "Remedial Action" shall mean all activities Performing Settling Defendants are required to perform under the Consent Decree to implement the ROD, in accordance with the SOW, the final approved remedial design submission, the approved Remedial Action Work Plan(s), and other plans approved by EPA, including implementation of Institutional Controls, to achieve the Performance Standards, and excluding the performance of the Remedial Designs, O&M, and the activities required under Section XXV (Retention of Records).

hh. "Remedial Action Work Plan(s)" shall mean the document(s) developed pursuant to Paragraph 11 (Remedial Action) and the SOW and approved by EPA, and any modifications thereto.

ii. "Section" shall mean a portion of this Consent Decree identified by a Roman numeral.

jj. "Settling Defendants" shall mean the parties identified in Appendix E.

kk. "Site" shall mean the Cooper Drum Company Superfund Site, Los Angeles County, California, depicted generally on the map attached as Appendix B and the areal extent of hazardous substances released at or from the Site. The Site does not include the aquifers underlying the Gaspur aquifer.

ll. "Statement of Work or "SOW" shall mean the statement of work for implementation of the Supplemental Remedial Design, Remedial

Action and O&M at the Site, as set forth in Appendix C to this Consent Decree and any modifications made in accordance with this Consent Decree.

mm. "Supervising Contractor" shall mean the principal contractor retained by Performing Settling Defendants to supervise and direct the implementation of the Work under this Consent Decree.

nn. "Supplemental Remedial Design" shall mean such modifications, additions or changes to the EPA Remedial Designs to be incorporated into the Remedial Action Work Plans developed pursuant to Paragraph 11 (Remedial Action), as described in the SOW, to be undertaken and completed by Performing Settling Defendants.

oo. "United States" shall mean the United States of America and each department, agency and instrumentality of the United States, including EPA.

pp. "Waste Material" shall mean (1) any "hazardous substance" under Section 101(14) of CERCLA, 42 U.S.C. §9601(14); and (2) any pollutant or contaminant under Section 101(33) of CERCLA, 42 U.S.C.§ 9601(33).

qq. "Work" shall mean all activities and obligations Performing Settling Defendants are required to perform under this Consent Decree, except the activities required under Section XXV (Retention of Records).

V. GENERAL PROVISIONS

5. Objectives of the Parties. The objectives of the Parties in entering into this Consent Decree are to protect public health and welfare and the environment by the design and implementation of response actions at the Site by Performing Settling Defendants, to pay response costs of Plaintiffs, and to resolve the claims of Plaintiffs stated in the Complaint against Settling Defendants.

// //

// //

6. Commitments by Settling Defendants.

a. Performing Settling Defendants shall finance and perform the Work in accordance with this Consent Decree, the ROD, the SOW, and all work plans and other plans, standards, specifications, and schedules set forth in this Consent Decree or developed by Performing Settling Defendants and approved by EPA, after reasonable opportunity for review and comment by DTSC, pursuant to this Consent Decree. Performing Settling Defendants shall pay the United States and DTSC Past Response Costs, Interim Response Costs and Future Response Costs as provided in this Consent Decree.

b. The obligations of Performing Settling Defendants to finance and perform the Work, including obligations to pay amounts due under this Consent Decree, are joint and several. In the event of the insolvency of any Performing Settling Defendant or the failure of any Performing Settling Defendant to implement any requirement of this Consent Decree, the remaining Performing Settling Defendants shall complete all such requirements.

c. Performing Settling Defendants' obligations under this Consent Decree shall be independent of and unaffected by any nonperformance by Contributing Settling Defendants, Ability-to-Pay Settling Defendants or De Minimis Settling Defendants and shall remain in full force and effect regardless of whether Contributing Settling Defendants, Ability-to-Pay Settling Defendants or De Minimis Settling Defendants have complied with their obligations under this Consent Decree.

d. Contributing Settling Defendants shall make payments to Performing Settling Defendants in the amounts and at the times set out in Appendix H. Evidence of payment of these required amounts by Contributing Settling Defendants shall be provided to EPA either by the

Performing Settling Defendants that have received such payment or by any escrow agent charged by any Contributing Settling Defendants to transfer such payments to Performing Settling Defendants.

e. Ability-to-Pay Settling Defendants shall make payments to the United States in the amounts and at the times set out in Appendix F.

f. Each De Minimis Settling Defendant shall make its payment to the United States in the amount and at the time set out for it in Appendix G.

7. Compliance With Applicable Law. All activities undertaken by Performing Settling Defendants pursuant to this Consent Decree shall be performed in accordance with the requirements of all applicable federal and state laws and regulations. Performing Settling Defendants must also comply with all applicable or relevant and appropriate requirements of all federal and state environmental laws as set forth in the ROD and the SOW. The activities conducted pursuant to this Consent Decree, if approved by EPA or otherwise approved under the Decree provisions, shall be deemed to be consistent with the NCP.

8. Permits.

a. As provided in Section 121(e) of CERCLA, 42 U.S.C. § 9621(e), and Section 300.400(e) of the NCP, 40 C.F.R. § 300.400(e), no permit shall be required for any portion of the Work conducted entirely on-Site (i.e., within the areal extent of contamination or in very close proximity to the contamination and necessary for implementation of the Work). Where any portion of the Work that is not on-Site requires a federal or state permit or approval, Performing Settling Defendants shall submit timely and complete applications and take all other actions necessary to obtain all such permits or approvals.

b. Performing Settling Defendants may seek relief under the provisions of Section XVIII (Force Majeure) for any delay in the

performance of the Work resulting from the failure to obtain, or a delay in obtaining, any permit or approval, including any required municipal approval, referenced in Paragraph 8.a and necessary for the implementation of the Work, provided that they have submitted timely and complete applications and taken all other actions necessary to obtain all such permits or approvals.

c. This Consent Decree is not, and shall not be construed to be, a permit issued pursuant to any federal or state statute or regulation.

VI. PERFORMANCE OF THE WORK BY PERFORMING SETTLING DEFENDANTS

9. Selection of Supervising Contractor.

a. All aspects of the Work to be performed by Performing Settling Defendants pursuant to Sections VI (Performance of the Work by Performing Settling Defendants), VII (Remedy Review), VIII (Quality Assurance, Sampling and Data Analysis), and XV (Emergency Response) of this Consent Decree shall be under the direction and supervision of the Supervising Contractor. EPA has issued an authorization to proceed regarding the hiring of Haley & Aldrich as Supervising Contractor. If at any time hereafter, Performing Settling Defendants propose to change this Supervising Contractor, Performing Settling Defendants shall give such notice to EPA, and must obtain an authorization to proceed from EPA, after reasonable opportunity for review and comment by DTSC, before the new Supervising Contractor performs, directs, or supervises any Work under this Consent Decree. Performing Settling Defendants shall demonstrate that the proposed replacement contractor has a quality assurance system that complies with ANSI/ASQC E4-1994, "Specifications and Guidelines for Quality Systems for Environmental Data Collection and Environmental Technology Programs" (American National Standard, January 5, 1995), by

submitting a copy of the proposed contractor's Quality Management Plan ("QMP"). The QMP should be prepared in accordance with "EPA Requirements for Quality Management Plans (QA/R-2)" (EPS/240/B-01/002, March, 2001, reissued May 2006) or equivalent documentation as determined by EPA.

b. If EPA disapproves a proposed replacement Supervising Contractor, EPA will notify the Performing Settling Defendants in writing. Performing Settling Defendants shall submit to EPA and DTSC a list of contractors, including the qualifications of each contractor, that would be acceptable to them within 30 days of receipt of EPA's disapproval of the replacement contractor previously proposed. EPA will provide written notice of the names of any contractor(s) that it disapproves and an authorization to proceed with respect to any of the other contractors. Performing Settling Defendants may select any contractor from that list that is not disapproved and shall notify EPA and DTSC of the name of the replacement contractor selected within 21 days of EPA's authorization to proceed. If EPA fails to provide written notice of its authorization to proceed or disapproval as provided in this Paragraph and this failure prevents Performing Settling Defendants from meeting one or more deadlines in a plan approved by EPA pursuant to this Consent Decree, Performing Settling Defendants may seek relief under Section XVIII (Force Majeure).

10. Remedial Design.

a. As noted in Section I(K) of this Consent Decree, EPA completed the EPA Remedial Design Reports in September 2007. Performing Settling Defendants shall submit to EPA and DTSC, as part of the Remedial Action Work Plan(s) described in Paragraph 11, one or more Supplemental Remedial Designs for the design of the remedy set forth in the

ROD or in a Consent Decree ROD Amendment in accordance with the SOW or an amended SOW and for achievement of the Performance Standards and other requirements set forth in the ROD, this Consent Decree, and the SOW or an amended SOW. Upon approval of the Remedial Action Work Plan(s) by EPA, after reasonable opportunity for review and comment by DTSC, the Supplemental Remedial Design(s) shall be incorporated into and enforceable under this Consent Decree.

11. Remedial Action.

a. As set out in the SOW, the Group has performed work pursuant to the Order since 2009 and in the course of its compliance with the Order has completed and submitted deliverables approved by EPA in furtherance of the Remedial Action. Those previously submitted and approved deliverables are listed and described in the SOW.

b. The Remedial Action is being conducted in three phases. EPA has approved work plans submitted by the Performing Settling Defendants for Phase 1 Soil and Phase 1 Groundwater and Addenda that described the remedial work to be performed for the soil (Operable Unit 2, or "OU2") and groundwater (Operable Unit 1 or "OU1"). Phases 2 and 3 will entail preparation of a single work plan for each phase. The Phase 2 Remedial Action Work Plan shall include details for an OU1 downgradient containment and treatment system or the alternative Remedial Action selected by EPA in a Consent Decree ROD Amendment after evaluation of monitored natural attenuation ("MNA") and, if appropriate, the Focused Feasibility Study as set out in the SOW. The Phase 3 Remedial Action Work Plan shall include details for OU2 soil excavation and disposal. The Remedial Action Work Plans for Phase 2 and Phase 3 must be reviewed and approved by EPA, after reasonable opportunity for review and comment by DTSC.

c. Each Work Plan shall include:

i. Project Description

A. The Phase 2 Remedial Action Work Plan (RAWP) shall include details associated with the OU1 downgradient containment and treatment system, the Remedial Action selected in the ROD; unless EPA selects an alternative Remedial Action in a Consent Decree ROD Amendment after the Parties complete the following process:

1. The PSDs shall implement the *MNA Assessment Work Plan* previously approved by EPA and submit the MNA sampling data and assessment to EPA in a Technical Memo within 60 days after completion of the two-year sampling program. If EPA thereafter selects MNA as the Remedial Action in a Consent Decree ROD Amendment, the Parties shall modify the Consent Decree pursuant to the provisions of Paragraph 113. If the Court approves the modification, the PSDs shall implement MNA and the Phase 2 RAWP shall include details associated with the implementation of MNA.

2. If EPA does not select MNA as the Phase 2 OU1 Remedial Action, the PSDs, within twelve months of receiving such notice from EPA, shall submit an FFS to EPA to re-evaluate the feasibility and effectiveness of groundwater extraction and treatment against alternative remedial technologies. The FFS shall include the PSDs' recommended alternative Remedial Action as an alternative to groundwater extraction and treatment. If, after review of the FFS, EPA selects the PSDs' recommended alternative Remedial Action in

a Consent Decree ROD Amendment, the Parties shall modify the Consent Decree pursuant to the provisions of Paragraph 113. If the Court approves the modification, the PSDs shall implement such alternative Remedial Action and the Phase 2 RAWP shall include the details associated with implementation of such alternative Remedial Action.

3. a) If EPA selects an alternative Remedial Action for OU1 Phase 2 pursuant to (1) or (2), above, in this subparagraph, the Phase 2 RAWP will be submitted pursuant to the schedule in the amended SOW after Court approval of the modification of this Consent Decree incorporating the Consent Decree ROD Amendment.

b) If EPA does not select an alternative Remedial Action for OU1 Phase 2 pursuant to (1) or (2) above, then the PSDs shall submit the Phase 2 RAWP for implementation of groundwater extraction and treatment, the Remedial Action selected in the ROD, pursuant to the schedule in the SOW.

The provisions of this Paragraph 11(c)(i) do not alter or affect in any way the authority of EPA to take any of the actions set out in paragraphs 86 and 87 (Pre-certification and Post-certification Reservations), including, without limitation, the authority to promulgate ROD Amendments. The provisions of this Paragraph 11(c)(i) do not alter or affect in any way the authority of EPA to select further response actions or the obligation of the PSDs to perform further response actions as set out in Paragraphs 17-20 of this Consent Decree.

B. The Phase 3 Soil Excavation and Disposal Work Plan shall include details for implementation of excavation and

disposal of non-VOCs in soil, and shall address implementation of Institutional Controls where soil excavation is not practicable. On the basis of pre-excavation soil sampling and considerations of accessibility, community impact, and air quality impact, EPA will determine the extent of excavation and the need, if any, for Institutional Controls.

The results of the pre-excavation characterization, the final excavation limits, and a strategy for implementation of EPA-selected Institutional Controls shall be presented in the Phase 3 OU2 RAWP.

ii. Description of the Responsibility and Authority of All Organizations and Key Personnel Involved With the Remedial Action

Each Work Plan shall define lines of authority and provide brief descriptions of duties.

iii. Schedule

Each Remedial Action Work Plan shall identify the initiation and completion dates for each required construction activity, inspection, and deliverable required by the SOW schedule. The schedule shall include coordination meetings and other activities as set out in Section IV(B)(3) of the SOW. Coordination meetings may take place telephonically.

iv. Contracting Strategy and Construction Process

Each Remedial Action Work Plan shall briefly describe the planned contracting strategy, including a description of the EPA evaluation and approval process for significant construction changes.

v. Plans for Satisfying All Permitting Requirements and Acquiring Property, Leases, Easements, or Other Access

Each Remedial Action Work Plan shall list: all permits, property, leases, and easements required for implementation of the Remedial Action; permits, property, access rights, leases and easements acquired to date; and a schedule for submittal of permit applications and acquisition of property, leases or easements not yet obtained.

Where normally required, permits must be obtained for all off-Site activities. The Performing Settling Defendants are not required to obtain permits for on-Site remedial activities, but must comply with all substantive requirements, including building codes. If a permit will not be obtained for an on-Site activity where a permit is usually required, the Work Plan shall describe all consultative or coordination activities planned to identify and satisfy the substantive requirements.

vi. Third Parties Necessary for Construction, or Operation and Maintenance of the Remedial Action

Each Remedial Action Work Plan shall describe the roles and responsibilities of Performing Settling Defendants, the County of Los Angeles, the City of South Gate, participating water and wastewater agencies, and other parties expected to play a significant role in the construction or operation of the Remedial Action, and shall provide the related information required by the SOW.

vii. Identification of Any Concerns About the Quantity, Quality, Completeness, or Usability of Water Quality or Other Data Upon Which the Design was Based

Each Remedial Action Work Plan shall provide a description of additional data collection efforts, if any, required for completion of the Remedial Design for the Remedial Action, and shall consider whether any data are needed to verify that critical design assumptions remain valid. If additional data are required, the Remedial Action Work Plan shall propose a schedule for preparation and implementation of a Sampling and Analysis Plan or Addendum.

viii. Description of Planned Community Relations Activities to be Conducted During the Remedial Action

Each Remedial Action Work Plan shall affirm that the Performing Settling Defendants shall cooperate with EPA and DTSC in providing community relations support work. This support shall be at the request of EPA and may include:

A. Logistical support for public informational or technical meetings, including: the provision/copying of presentations, signage, exhibits, visual aids and equipment; renting and setting up meeting locations; and English translation support at public meetings;

B. Publication and copying of fact sheets or updates, and document translation;

C. Assistance in placing EPA-generated public notices in print; and

D. Logistical support for EPA-conducted community interviews.

ix. Updates to the Remedial Action Work Plans and Periodic Reporting to the EPA

Each Remedial Action Work Plan shall describe provisions for reporting progress to EPA consistent with the schedule included in the SOW and the OU1 Monitoring Plan for Groundwater and OU2 Monitoring Plan for Soil.

d. Upon approval of any Remedial Action Work Plan by EPA, Performing Settling Defendants shall implement the activities required under the Remedial Action Work Plan. Performing Settling Defendants shall submit to EPA and DTSC all reports and other deliverables required under the approved Remedial Action Work Plan in accordance with the approved schedule in the SOW for review and approval pursuant to Section XII (EPA Approval of Plans and Other Submissions). Unless otherwise directed by EPA, Performing Settling Defendants shall not commence physical Remedial Action activities at the Site pursuant to any Remedial Action Work Plan prior to receipt of EPA approval of that Remedial Action Work Plan.

12. Performing Settling Defendants shall continue to implement the Remedial Action until the Performance Standards are achieved. Performing Settling Defendants shall implement O&M for so long thereafter as is required under this Consent Decree.

13. Modification of the SOW or Related Work Plans.

a. If EPA, after reasonable opportunity for review and comment by DTSC, determines that it is necessary to modify the work specified in the SOW and/or in work plans developed pursuant to the SOW to achieve and maintain the Performance Standards or to carry out and maintain the effectiveness of the remedy set forth in the ROD, and such modification is consistent with the scope of the remedy set forth in the ROD, then EPA may issue such modification in writing and shall notify Performing Settling Defendants of such modification. For purposes of this Paragraph and

Paragraph 49 (Completion of the Remedial Action) only, the "scope of the remedy set forth in the ROD" is:

i. Restoration of groundwater to drinking water standards for certain volatile organic compound(s) ("VOC") through treatment. The remedy set forth in the ROD includes extraction and treatment using liquid phase activated carbon vessels, with containment to be provided at the downgradient extent of contamination. The remedy set forth in the ROD includes chemical in-situ treatment to enhance the treatment of COCs in groundwater.

ii. Remediation of soil COCs to prevent VOCs from migrating into groundwater at levels which would exceed drinking water standards. The remedy for soils set forth in the ROD includes dual phase extraction for treatment of VOCs.

iii. Remediation, where feasible, of non-VOC contaminated soil to health-action levels protective of ongoing and potential future Site uses. The remedy for non-VOC contaminated soils set forth in the ROD includes excavation for disposal, if practicable and Institutional Controls for protectiveness where excavation is not practicable.

iv. Remediation of soil and groundwater VOCs to health-based action levels to eliminate potential exposures to contaminated indoor air.

If Performing Settling Defendants object to the modification they may, within 30 days after EPA's notification, invoke dispute resolution under Paragraph 69 (Record Review).

b. The remediation of all aquifers at the Site underlying the Gaspur Aquifer, including the Exposition Aquifer, is not within the scope of the remedy set forth in the ROD. Such remediation, or any response actions with respect to aquifers underlying the Gaspur Aquifer, other than the

monitoring of the Exposition Aquifer described in the SOW, will require a separate administrative or judicial enforcement action seeking to enforce implementation of a remedy set forth in a decision document other than the ROD.

c. The SOW and/or related work plans shall be modified: (1) in accordance with the modification issued by EPA; or (2) if Performing Settling Defendants invoke dispute resolution, in accordance with the final resolution of the dispute. The modification shall be incorporated into and enforceable under this Consent Decree, and Performing Settling Defendants shall implement all work required by such modification. Performing Settling Defendants shall incorporate the modification into the Remedial Design or Remedial Action Work Plan under Paragraph 10 (Remedial Design) or Paragraph 11 (Remedial Action), as appropriate.

d. Nothing in this Paragraph shall be construed to limit EPA's authority to require performance of further response actions as otherwise provided in this Consent Decree. Nothing in this Paragraph shall be construed to limit DTSC's authority to require performance of further response actions except as provided in this Consent Decree.

14. Nothing in this Consent Decree, the SOW, or the Remedial Design or Remedial Action Work Plans constitutes a warranty or representation of any kind by Plaintiffs that compliance with the work requirements set forth in the SOW and the Work Plans will achieve the Performance Standards.

15. <u>Off-Site Shipment of Waste Material</u>

a. Performing Settling Defendants may ship Waste Material from the Site to an off-Site facility only if they verify, prior to any shipment, that the off-Site facility is operating in compliance with the requirements of Section 121(d)(3) of CERCLA, 42 U.S.C. § 9621(d)(3), and 40 C.F.R. § 300.440, by obtaining a determination from EPA that the proposed receiving

facility is operating in compliance with 42 U.S.C. § 9621(d)(3) and 40 C.F.R. § 300.440.

b. Performing Settling Defendants may ship Waste Material from the Site to an out-of-state waste management facility only if, prior to any shipment, they provide written notice to the appropriate state environmental official in the receiving facility's state and to the EPA Project Coordinator. This notice requirement shall not apply to any off-Site shipments when the total volume of all such shipments will not exceed 10 cubic yards. The written notice shall include the following information, if available: (1) the name and location of the facility to which the Waste Material is to be shipped; (2) the type and quantity of the Waste Material to be shipped; (3) the schedule for the shipment; and (4) the method of transportation. Performing Settling Defendants shall also notify the state environmental official referenced above and the EPA Project Coordinator of any major changes in the shipment plan, such as a decision to ship the Waste Material to a different out-of-state facility. Performing Settling Defendants shall provide the written notice after the award of the contract for Remedial Action construction and before the Waste Material is shipped.

VII. REMEDY REVIEW

16. Periodic Review. Performing Settling Defendants shall conduct any studies and investigations that EPA requests in order to permit EPA to conduct reviews of whether the Remedial Action is protective of human health and the environment at least every five years as required by Section 121(c) of CERCLA, 42 U.S.C. § 9621(c), and any applicable regulations.

17. EPA Selection of Further Response Actions. If EPA determines, after reasonable opportunity for review and comment by DTSC, that the Remedial Action is not protective of human health and the environment, EPA may select further response actions for the Site, including, without limitation, response actions

for the Phase 2 OU1 Remedial Action selected by EPA after either the MNA evaluation or the FFS pursuant to Paragraph 11 of this Consent Decree, in accordance with the requirements of CERCLA and the NCP, including any State of California notice and participation requirements contained therein.

18. Opportunity To Comment. Performing Settling Defendants and, if required by Sections 113(k)(2) or 117 of CERCLA, 42 U.S.C § 9613(k)(2) or 9617, the public, will be provided with an opportunity to comment on any further response actions proposed by EPA as a result of the review conducted pursuant to Section 121(c) of CERCLA and to submit written comments for the record during the comment period.

19. Performing Settling Defendants' Obligation To Perform Further Response Actions. If EPA selects further response actions at the Site, EPA may require Performing Settling Defendants to perform such further response actions, but only to the extent that the reopener conditions in Paragraph 86 or Paragraph 87 (United States' Pre-and Post-Certification Reservations) are satisfied. Performing Settling Defendants may invoke the procedures set forth in Section XIX (Dispute Resolution) to dispute (a) EPA's determination that the reopener conditions of Paragraphs 86 or 87 are satisfied, (2) EPA's determination that the Remedial Action is not protective of human health and the environment, or (3) EPA's selection of the further response actions. Disputes pertaining to whether the Remedial Action is protective or to EPA's selection of further response actions shall be resolved pursuant to Paragraph 69 (Record Review).

20. Submissions of Plans. If Performing Settling Defendants are required to perform further response actions pursuant to Paragraph 19, they shall submit a plan for such response action to EPA for approval in accordance with the procedures of Section VI (Performance of Work by Performing Settling Defendants). Performing Settling Defendants shall implement the approved plan in accordance with the provisions of this Consent Decree.

VIII. QUALITY ASSURANCE, SAMPLING AND DATA ANALYSIS

21. Quality Assurance.

a. Performing Settling Defendants shall use the quality assurance, quality control, and chain of custody procedures for all treatability, design, compliance and monitoring samples in accordance with "EPA Requirements for Quality Assurance Project Plans (QA/R5)" (EPA/240/B-01/003, March 2001, reissued May 2006), "Guidance for Quality Assurance Project Plans (QA/G-5)" (EPA/240/R-02/009, December 2002), and subsequent amendments to such guidelines upon Performing Settling Defendants' receipt of notification by EPA of such amendment. Amended guidelines shall apply only to procedures conducted after such notification.

b. Prior to the commencement of any monitoring project under this Consent Decree, Performing Settling Defendants shall submit to EPA for approval, after reasonable opportunity for review and comment by DTSC, a Quality Assurance Project Plan ("QAPP") that is consistent with the SOW, the NCP and Uniform Federal Policy QAPP Manual or the EPA QA/G-5 QAPP guidance, including subsequent revisions thereto. If relevant to the proceeding, Performing Settling Defendants and EPA agree that validated sampling data generated in accordance with the QAPP(s) and reviewed and approved by EPA shall be admissible as evidence, without objection, in any proceeding under this Consent Decree. Performing Settling Defendants shall ensure that EPA and DTSC personnel and their authorized representatives are allowed access at reasonable times to all laboratories utilized by Performing Settling Defendants in implementing this Consent Decree. In addition, Performing Settling Defendants shall ensure that such laboratories shall analyze all samples submitted by EPA pursuant to the QAPP for quality assurance monitoring. Performing Settling Defendants shall ensure that the laboratories they utilize for the analysis of

samples taken pursuant to this Consent Decree perform all analyses according to accepted EPA methods. Accepted EPA methods consist of those methods which are documented in the "USEPA Contract Laboratory Statement of Work for Inorganic Analysis, ILM05.4" and the "USEPA Contract Laboratory Program Statement of Work for Organic Analysis, SOM01.2," and any amendments made thereto during the course of the implementation of this Consent Decree. Notwithstanding the foregoing, upon approval by EPA, after reasonable opportunity for review and comment by DTSC, Performing Settling Defendants may use other analytical methods with equivalent level of QA/QC documentation as defined by the Region IX "Laboratory Documentation Required for Data Evaluation, R9QA/004.2 August 2001" guidance. Performing Settling Defendants shall ensure that all laboratories they use for analysis of samples taken pursuant to this Consent Decree participate in an EPA or EPA-equivalent quality assurance/quality control ("QA/QC") program. Performing Settling Defendants shall only use laboratories that have a documented Quality System that complies with ANSI/ASQC E4-1994, "Specifications and Guidelines for Quality Systems for Environmental Data Collection and Environmental Technology Programs," ("American National Standard, January 5, 1995), and "EPA Requirements for Quality Management Plans (QA/R-2)," (EPA/240/B-01/002, March 2001, reissued May 2006) or equivalent documentation as determined by EPA. EPA considers laboratories accredited under the National Environmental Laboratory Accreditation Program ("NELAP") as meeting the Quality System requirements. Performing Settling Defendants shall ensure that all field methodologies utilized in collecting samples for subsequent analysis pursuant to this Consent Decree are conducted in accordance with the procedures set forth in the QAPP approved by EPA.

22. Upon request, Performing Settling Defendants shall allow split or duplicate samples to be taken by EPA or DTSC or their authorized representatives. Performing Settling Defendants shall notify EPA not less than 28 days in advance of any sample collection activity unless shorter notice is agreed to by EPA. In addition, EPA or DTSC shall have the right to take any additional samples that EPA deems necessary. EPA or DTSC shall notify Performing Settling Parties not less than 14 days in advance of its plan to take such additional samples. Upon request, EPA or DTSC shall allow Performing Settling Defendants to take split or duplicate samples of any samples it takes as part of EPA's oversight of Performing Settling Defendants' implementation of the Work.

23. Performing Settling Defendants shall submit to EPA and DTSC two copies of the results of all sampling and/or tests or other data obtained or generated by or on behalf of Performing Settling Defendants with respect to the Site and/or the implementation of this Consent Decree unless EPA or DTSC agrees otherwise. Copies may be delivered to EPA or DTSC by electronic means including email.

24. Notwithstanding any provision of this Consent Decree, the United States retains all of its information gathering and inspection authorities and rights, including enforcement actions related thereto, under CERCLA, RCRA and any other applicable statutes or regulations.

IX. ACCESS AND INSTITUTIONAL CONTROLS

25. If the Site, or any other real property where access and/or land/water use restrictions are needed, is owned or controlled by any of the Settling Defendants:

a. such Settling Defendants shall, commencing on the date of lodging of this Consent Decree, provide the United States, DTSC and the other Settling Defendants, and their representatives, contractors, and subcontractors, with access at all reasonable times to the Site, or such other

real property, to conduct any activity regarding the Consent Decree including, but not limited to, the following activities:

(1) monitoring the Work;

(2) verifying any data or information submitted to the United States;

(3) conducting investigations relating to contamination at the Site;

(4) obtaining samples;

(5) assessing the need for, planning, or implementing additional response actions at the Site;

(6) assessing implementation of quality assurance and quality control practices as defined in the approved Quality Assurance Project Plans;

(7) implementing the Work pursuant to the conditions set forth in Paragraph 90 (Work Takeover);

(8) inspecting and copying records, operating logs, contracts, or other documents maintained or generated by Settling Defendants or their agents, consistent with Section XXIV (Access to Information);

(9) assessing Performing Settling Defendants' compliance with this Consent Decree;

(10) determining whether the Site or other real property is being used in a manner that is prohibited or restricted, or that may need to be prohibited or restricted under the Consent Decree; and

(11) implementing, monitoring, maintaining, reporting on, and enforcing any Institutional Controls.

b. Commencing on the date of lodging of the Consent Decree, Settling Defendants shall not use the Site, or such other real property, in any manner that EPA, after reasonable opportunity for review and comment by

DTSC, determines will pose an unacceptable risk to human health or to the environment due to exposure to Waste Material or interfere with or adversely affect the implementation, integrity, or protectiveness of the Remedial Action or O&M.

26. If the Site, or any other property where access and/or land/water use restrictions are needed to implement this Consent Decree, is owned or controlled by persons other than any Settling Defendant, Performing Settling Defendants shall use best efforts to secure from such persons:

(a) an agreement to provide access thereto for such Performing Settling Defendants, as well as for the United States on behalf of EPA and DTSC, as well as their representatives (including contractors), for the purpose of conducting any activity specified in this Consent Decree including, but not limited to, those activities listed in Paragraph 25 of this Consent Decree.

(b) an agreement, enforceable by Performing Settling Defendants and the United States and DTSC, to refrain from using the Site, or such other real property, in any manner that EPA, after reasonable opportunity for review and comment by DTSC, determines will pose an unacceptable risk to human health or the environment due to exposure to Waste Material or interfere with or adversely affect the implementation, integrity, or protectiveness of the Remedial Action.

27. For purposes of Paragraph 26 of this Consent Decree, "best efforts" includes the payment of reasonable sums of money in consideration of access, access easements, land/water use restrictions, restrictive easements, and/or an agreement to release or subordinate a prior lien or encumbrance. If within 30 days of the Effective Date, Performing Settling Defendants have not obtained any access or land/water use restriction agreements required by Paragraphs 25 and 26 of this Consent Decree, Performing Settling Defendants shall promptly notify the

United States in writing, and shall include in that notification a summary of the steps that the Performing Settling Defendants have taken to attempt to comply with Paragraph 25 or 26 of this Consent Decree. The United States may, as it deems appropriate, assist Performing Settling Defendants in obtaining access or land/water use restrictions, or in obtaining the release or subordination of a prior lien or encumbrance. Performing Settling Defendants will reimburse the United States under Section XVI (Payments for Response Costs), for all costs incurred, direct or indirect, by the United States in obtaining such access, agreements to restrict land/water use, and/or the release/subordination of prior liens or encumbrances including, but not limited to, the cost of attorney time and the amount of monetary consideration or just compensation paid by the United States to any landowner. The foregoing commitments in Paragraphs 26 and 27 do not apply to any property owned by Cooper Living Trust or Cooper Properties, LP or their successors.

28. If EPA, after reasonable opportunity for review and comment by DTSC, determines that Institutional Controls in the form of state or local laws, regulations, ordinances, zoning restrictions, or other governmental controls are needed at or in connection with the Site, Performing Settling Defendants will cooperate with EPA's efforts to secure and ensure compliance with such Institutional Controls.

29. Notwithstanding any provision of this Consent Decree, the United States and DTSC retain all of their access authorities and rights, as well as all of its rights to require Institutional Controls, including enforcement authorities related thereto, under CERCLA, RCRA and any other applicable statute or regulations.

X. REPORTING REQUIREMENTS

30. In addition to any other requirement of this Consent Decree, Performing Settling Defendants shall submit to EPA and DTSC two copies of written monthly progress reports that: (a) describe the actions which have been

taken toward achieving compliance with this Consent Decree during the previous month; (b) include a summary of all results of sampling and tests and all other data received or generated by Performing Settling Defendants or their contractors or agents in the previous month; (c) identify all plans, reports, and other deliverables required by this Consent Decree completed and submitted during the previous month; (d) describe all actions, including, but not limited to, data collection and implementation of work plans, that are scheduled for the next six weeks and provide other information relating to the progress of construction, including, but not limited to, critical path diagrams, Gantt charts and Pert charts; (e) include information regarding percentage of completion, unresolved delays encountered or anticipated that may affect the future schedule for implementation of the Work, and a description of efforts made to mitigate those delays or anticipated delays; (f) include any modifications to the work plans or other schedules that Performing Settling Defendants have proposed to EPA or that have been approved by EPA; and (g) describe all activities undertaken in support of the Community Involvement Plan during the previous month and those to be undertaken in the next six weeks. These reports may be submitted by electronic means including email. Performing Settling Defendants shall submit these progress reports to EPA and DTSC by the tenth day of every month following the lodging of this Consent Decree until EPA notifies Performing Settling Defendants the reports are no longer required pursuant to Section XIV (Certificate of Completion) or until EPA, DTSC, and Performing Settling Defendants agree to a modified schedule. If requested by EPA or DTSC, Performing Settling Defendants shall also provide briefings for EPA and DTSC to discuss the progress of the Work.

31. Performing Settling Defendants shall notify EPA and DTSC of any change in the schedule described in the monthly progress report for the performance of any activity, including, but not limited to, data collection and

implementation of work plans, no later than seven days prior to the performance of the activity or as otherwise agreed by the Parties.

32. Upon the occurrence of any event during performance of the Work that Performing Settling Defendants are required to report pursuant to Section 103 of CERCLA, 42 U.S.C. § 9603, or Section 304 of the Emergency Planning and Community Right-to-Know Act ("EPCRA"), 42 U.S.C. § 11004, Performing Settling Defendants shall within 24 hours of the onset of such event orally notify the EPA Project Coordinator or the Alternate EPA Project Coordinator (in the event of the unavailability of the EPA Project Coordinator), or, in the event that neither the EPA Project Coordinator or Alternate EPA Project Coordinator is available, the Emergency Response Section, Region IX, United States Environmental Protection Agency. These reporting requirements are in addition to the reporting required by CERCLA Section 103 or EPCRA Section 304. Immediately following notice to EPA as required by this Paragraph, Performing Settling Defendants shall orally notify the DTSC Project Coordinator.

33. Within 20 days of the onset of such an event, Performing Settling Defendants shall furnish to EPA a written report, signed by an authorized representative of the Performing Settling Defendants, setting forth the events that occurred and the measures taken, and to be taken, in response thereto. Within 30 days after the conclusion of such an event, Performing Settling Defendants shall submit a report setting forth all actions taken in response thereto.

34. Performing Settling Defendants shall submit two copies of all plans, reports, data, and other deliverables required by the SOW, the Remedial Action Work Plan, or any other approved plans to EPA in accordance with the schedules set forth in such plans. Performing Settling Defendants shall simultaneously submit two copies of all such plans, reports and data to the DTSC. Upon request by EPA or DTSC, and to the extent feasible, Performing Settling Defendants shall submit in electronic form all or any portion of any deliverables Performing Settling

Defendants are required to submit pursuant to the provisions of this Consent Decree.

35. All deliverables submitted by Performing Settling Defendants to EPA or DTSC that purport to document Performing Settling Defendants' compliance with the terms of this Consent Decree shall be signed by an authorized representative of Performing Settling Defendants.

XI. EPA APPROVAL OF PLANS AND OTHER SUBMISSIONS

36. Initial Submission.

(a) After review of any plan, report or other item which is required to be submitted for approval pursuant to this Consent Decree, EPA shall, after reasonable opportunity for review and comment by DTSC: (1) approve, in whole or in part, the submission; (2) approve the submission upon specified conditions; (3) disapprove, in whole or in part, the submission; or (4) any combination of the foregoing.

(b) EPA may also modify the initial submission to cure deficiencies in the submission if: (1) EPA determines that disapproving the submission and awaiting a resubmission would cause substantial disruption to the Work; or (2) previous submission(s) have been disapproved due to material defects and the deficiencies in the initial submission under consideration indicate a bad faith lack of effort to submit an acceptable plan, report or deliverable.

37. Resubmissions. Upon receipt of a notice of disapproval under Paragraph 36(3) or (4) or if required by a notice of approval upon specified conditions under Paragraph 36(2), after reasonable opportunity for review and comment by DTSC, Performing Settling Defendants shall, within 30 days or such longer time as specified by EPA in such notice, correct the deficiencies and resubmit the plan, report, or other deliverable for approval. After review of the resubmitted plan, report, or other deliverable, EPA may: (a) approve, in whole or in part, the resubmission; (b) approve the resubmission upon specified conditions;

(c) modify the resubmission; (d) disapprove, in whole or in part, the resubmission, requiring Performing Settling Defendants to correct the deficiencies; or (e) any combination of the foregoing

38. Material Defects. If an initially submitted or resubmitted plan, report, or other deliverable contains a material defect, and the plan, report, or other deliverable is disapproved or modified by EPA under Paragraph 36(3) or 37(c) due to such material defect, then EPA shall provide notice of same to Performing Settling Defendants and provide a reasonable period within which to cure such defect. If the defect is not timely cured, the material defect shall constitute a lack of compliance for purposes of Paragraph 72. The provisions of Section XIX (Dispute Resolution) and Section XX (Stipulated Penalties) shall govern the accrual and payment of any stipulated penalties regarding Performing Settling Defendants' submissions under this Section.

39. Implementation. Upon approval or approval upon conditions of any plan, report, or other deliverable, or any portion thereof: (a) such plan, report, or other deliverable, or portion thereof, shall be incorporated into and enforceable under this Consent Decree; and (b) Performing Settling Defendants shall take any action required by such plan, report, or other deliverable, or portion thereof, subject only to their right to invoke the Dispute Resolution procedures set forth in Section XIX (Dispute Resolution) with respect to the modifications or conditions made by EPA. The implementation of any non-deficient portion of a plan, report, or other deliverable submitted or resubmitted under Paragraph 36 or 37 shall not relieve Performing Settling Defendants of any liability for stipulated penalties under Section XXI (Stipulated Penalties).

XII. PROJECT COORDINATORS

40. Within 20 days after lodging this Consent Decree, Performing Settling Defendants and EPA will notify each other, in writing, of the name, address, telephone number, and email address of their respective designated Project

Coordinators and Alternate Project Coordinators. If a Project Coordinator or Alternate Project Coordinator initially designated is changed, the identity of the successor will be given to the other Parties at least five working days before the change occurs, unless impracticable, but in no event later than the actual day the change is made. Performing Settling Defendants' Project Coordinator shall be subject to disapproval by EPA, after reasonable opportunity for review and comment by DTSC, and shall have the technical expertise sufficient to adequately oversee all aspects of the Work. Performing Settling Defendants' Project Coordinator shall not be an attorney for any Settling Defendant in this matter. He or she may assign other representatives, including other contractors, to serve as a Site representative for oversight of performance of daily operations during remedial activities.

41. Plaintiffs may designate other representatives, including, but not limited to, EPA and DTSC employees, and federal contractors and consultants, to observe and monitor the progress of any activity undertaken pursuant to this Consent Decree. EPA's Project Coordinator and Alternate Project Coordinator shall have the authority lawfully vested in a Remedial Project Manager ("RPM") and an On-Scene Coordinator ("OSC") by the NCP, 40 C.F.R. Part 300. EPA's Project Coordinator or Alternate Project Coordinator shall have authority, consistent with the NCP, to halt any Work required by this Consent Decree and to take any necessary response action when he or she determines that conditions at the Site constitute an emergency situation or may present an immediate threat to public health or welfare or the environment due to release or threatened release of Waste Material.

42. EPA's Project Coordinator and Performing Settling Defendants' Project Coordinator will meet on an "as needed" basis. DTSC's Project Coordinator shall be allowed to participate in such meetings at DTSC's discretion.

XIII. PERFORMANCE GUARANTEE

43. In order to ensure the full and final completion of the Work, Performing Settling Defendants shall establish and maintain a performance guarantee, initially in the amount of $15,000,000.00, for the benefit of EPA (hereinafter "Estimated Cost of the Work"). The performance guarantee, which must be satisfactory in form and substance to EPA, shall be in the form of one or more of the following mechanisms (provided that, if Performing Settling Defendants intend to use multiple mechanisms, such multiple mechanisms shall be limited to surety bonds guaranteeing payment, letters of credit, trust funds, and insurance policies):

a. A surety bond unconditionally guaranteeing payment and/or performance of the Work that is issued by a surety company among those listed as acceptable sureties on federal bonds as set forth in Circular 570 of the U.S. Department of the Treasury;

b. One or more irrevocable letters of credit, payable to or at the direction of EPA, that is issued by one or more financial institution(s) (1) that has the authority to issue letters of credit and (2) whose letter-of-credit operations are regulated and examined by a federal or state agency;

c. A trust fund established for the benefit of EPA that is administered by a trustee (1) that has the authority to act as a trustee and (2) whose trust operations are regulated and examined by a federal or state agency;

d. A policy of insurance that (1) provides EPA with acceptable rights as a beneficiary thereof; and (2) is issued by an insurance carrier (i) that is eligible to issue insurance policies in the applicable jurisdiction(s) and (ii) whose insurance operations are regulated and subject to examination by a federal or state agency;

e. A demonstration by one or more Performing Settling Defendants that each such Performing Settling Defendant meets the financial test criteria of 40 C.F.R. Part 264.143(f) with respect to the Estimated Cost of the Work (plus the amount(s) of any other federal or any state environmental obligations financially assured through the use of a financial test or guarantee), provided that all other requirements of 40 C.F.R. § 264.143(f) are met to EPA's satisfaction; or

f. A written guarantee to fund or perform the Work executed in favor of EPA by one or more of the following: (1) a direct or indirect parent company of a Performing Settling Defendant, or (2) a company that has a "substantial business relationship" (as defined in 40 C.F.R. § 264.141(h)) with at least one Performing Settling Defendant; provided, however, that any company providing such a guarantee must demonstrate to the satisfaction of EPA that it satisfies the financial test and reporting requirements for owners and operators set forth in subparagraphs (1) through (8) of 40 C.F.R. § 264.143(f) with respect to the Estimated Cost of the Work (plus the amount(s) of any other federal or any state environmental obligations financially assured through the use of a financial test or guarantee) that it proposes to guarantee hereunder.

44. Performing Settling Defendants have selected, and EPA has found satisfactory, as an initial performance guarantee, pursuant to Paragraph 43(a)(b) and (d), a combination of surety bonds, letters of credit and policies of insurance in the forms attached hereto as Appendix J. Within ten days after the Effective Date, Performing Settling Defendants shall execute or otherwise finalize all instruments or other documents required in order to make the selected performance guarantee(s) legally binding in a form substantially identical to the documents attached hereto as Appendix J, and such performance guarantee shall thereupon be fully effective. Within 30 days after the Effective Date, Performing Settling

Defendants shall submit copies of all executed and/or otherwise finalized instruments or other documents required in order to make the selected performance guarantee(s) legally binding to the EPA Regional Financial Management Officer in accordance with Section XXVI (Notices and Submissions) with a copy to the United States.

45. If, at any time after the Effective Date and before the issuance of the Certificate of Completion of the Work pursuant to Section XIV, Performing Settling Defendants provide a performance guarantee for completion of the Work by means of a demonstration or guarantee pursuant to Paragraph 43(e) or 43(f), performing Settling Defendants shall also comply with the other relevant requirements of 40 C.F.R. § 264.143(f) relating to these mechanisms unless otherwise provided in this Consent Decree, including but not limited to: (a) the initial submission of required financial reports and statements from the relevant entity's chief financial officer ("CFO") and independent certified public accountant ("CPA"), in the form prescribed by EPA in its test sample CFO letters and CPA reports available at: http://www.epa.gov/compliance/resources/policies/cleanup/superfund/fa-test-samples.pdf; (b) the annual resubmission of such reports and statements within 90 days after the close of each such entity's fiscal year; and (c) the prompt notification of EPA after each such entity determines that it no longer satisfies the financial test requirements set forth at 40 C.F.R. § 264.143(f)(1) and in any event within 90 days after the close of any fiscal year in which such entity no longer satisfies such financial test requirements. For purposes of the performance guarantee mechanisms specified in this Section XIII only, references in 40 C.F.R. Part 264, Subpart H, to "closure", "post-closure", and "plugging and abandonment" shall be deemed to include the Work; the terms "current closure cost estimate," "current post-closure cost estimate," and "current plugging and abandonment cost estimate" shall be deemed to include the Estimated Cost of the Work; the terms "owner" and "operator" shall be deemed to refer to each

Performing Settling Defendant making a demonstration under Paragraph 43; and the terms "facility" and "hazardous waste facility" shall be deemed to include the Site.

46. In the event that EPA determines at any time that a performance guarantee provided by a Performing Settling Defendant is inadequate or otherwise no longer satisfies the requirements set forth in this Section, whether due to an increase in the estimated cost of implementing the Work, or for any other reason, or in the event that any Performing Settling Defendant becomes aware of information indicating that a performance guarantee provided pursuant to this Section is inadequate or otherwise no longer satisfies the requirements set forth in this Section, whether due to an increase in the estimated cost of completing the Work or for any other reason, Performing Settling Defendants, within 30 days after receipt of notice of EPA's determination or, as the case may be, within 30 days after any Performing Settling Defendant becoming aware of such information, shall obtain and present to EPA for approval a proposal for a revised or alternative form of performance guarantee listed in Paragraph 43 that satisfies all requirements set forth in this Section XIII; provided, however, that if any Performing Settling Defendant cannot obtain such revised or alternative form of performance guarantee within such 30-day period, and provided further that a Performing Settling Defendant shall have commenced to obtain such revised or alternative form of performance guarantee within such 30-day period, and thereafter diligently proceeds to obtain the same, EPA shall extend such period for such time as is reasonably necessary for the Performing Settling Defendant in the exercise of due diligence to obtain such revised or alternative form of performance guarantee, such additional period not to exceed 30 days. In seeking approval for a revised or alternative form of performance guarantee, Performing Settling Defendants shall follow the procedures set forth in Paragraph 48. Performing Settling Defendants' inability to post a performance guarantee for completion of the Work shall in no

way excuse performance of any other requirements of this Consent Decree, including, without limitation, the obligation of Performing Settling Defendants to complete the Work in strict accordance with the terms of this Consent Decree.

47. Funding for Work Takeover. The commencement of any Work Takeover pursuant to Paragraph 90 shall trigger EPA's right to receive the benefit of any performance guarantee(s) provided pursuant to Paragraphs 43.a, 43.b, 43.c, 43.d or 43.f, and at such time EPA shall have immediate access to resources guaranteed under any such performance guarantee(s), whether in cash or in kind, as needed to continue and complete the Work assumed by EPA under the Work Takeover. Upon the commencement of any Work Takeover, if (a) for any reason EPA is unable to promptly secure the resources guaranteed under any such performance guarantee(s), whether in cash or in kind, necessary to continue and complete the Work assumed by EPA under the Work Takeover, or (b) in the event that the performance guarantee involves a demonstration of satisfaction of the financial test criteria pursuant to Paragraph 43.e or Paragraph 43.f(2), Performing Settling Defendants (or, in the case of Paragraph 43.f(2), the guarantor) shall, upon written demand from EPA, deposit into a special account within the EPA Hazardous Substance Superfund, in immediately available funds and without setoff, counterclaim, or condition of any kind, a cash amount up to but not exceeding the estimated cost of completing the Work as of such date, as determined by EPA. In addition, if at any time EPA and/or the Performing Settling Defendants is/are notified by the issuer of a performance guarantee that such issuer intends to cancel the performance guarantee mechanism it has issued, then, unless Performing Settling Defendants provide a substitute performance guarantee mechanism in accordance with this Section XIII no later than 30 days prior to the impending cancellation date, EPA shall be entitled (as of and after the date that is 30 days prior to the impending cancellation) to draw fully on the funds guaranteed under the then-existing performance guarantee. All EPA Work Takeover Costs not

reimbursed under this Paragraph shall be reimbursed under Section XVI (Payments for Response Costs).

48. Modification of Amount and/or Form of Performance Guarantee

a. Reduction of Amount of Performance Guarantee. If Performing Settling Defendants believe that the estimated cost of completing the Work has diminished below the amount set forth in Paragraph 43, Performing Settling Defendants may, on any anniversary of the Effective Date, or at any other time agreed to by the Parties, petition EPA in writing to reduce the amount of the performance guarantee provided pursuant to this Section so that the amount of the performance guarantee is equal to the estimated cost of completing the Work. Performing Settling Defendants shall submit a written proposal for such reduction to EPA that shall specify, at a minimum, the estimated cost of completing the Work and the basis upon which such cost was calculated. In seeking approval for a reduction in the amount of the performance guarantee, Performing Settling Defendants shall follow the procedures set forth in Paragraph 48(b) for requesting a revised or alternative form of performance guarantee, except as specifically provided in this Paragraph 48(a). If EPA decides to accept Performing Settling Defendants' proposal for reduction in the amount of the performance guarantee, either to the amount set forth in Performing Settling Defendants' written proposal or to some other amount as selected by EPA, EPA will notify the petitioning Performing Settling Defendants of such decision in writing. Upon EPA's acceptance of a reduction in the amount of the performance guarantee, the Estimated Cost of the Work shall be deemed to be the estimated cost of completing the Work set forth in EPA's written decision. After receiving EPA's written decision, Performing Settling Defendants may reduce the amount of the performance guarantee in accordance with and to the extent permitted by such written acceptance, and

shall submit copies of all executed and/or otherwise finalized instruments or other documents required in order to make the selected performance guarantee(s) legally binding in accordance with Paragraph 44. In the event of a dispute, Performing Settling Defendants may reduce the amount of the performance guarantee required hereunder only in accordance with a final administrative or judicial decision resolving such dispute pursuant to Section XIX (Dispute Resolution). Unless agreed to by EPA and the Performing Settling Defendants in advance, no change to the form or terms of any performance guarantee provided under this Section, other than a reduction in amount, is authorized except as provided in Paragraph 48(b).

b. Change of Form of Performance Guarantee

(1) If, after the Effective Date, Performing Settling Defendant(s) desire to change the form or terms of any performance guarantee provided pursuant to this Section, Performing Settling Defendants may, on any anniversary of the Effective Date or at any other time agreed to by the Parties, petition EPA in writing to request a change in the form or terms of the performance guarantee provided hereunder. The submission of such proposed revised or alternative performance guarantee shall be as provided in Paragraph 48(b)(2). Any decision made by EPA on a petition submitted under this Paragraph shall be made in EPA's sole and unreviewable discretion, and such decision shall not be subject to challenge by Performing Settling Defendants pursuant to the dispute resolution provisions of this Consent Decree or in any other forum.

(2) Performing Settling Defendants shall submit a written proposal for a revised or alternative performance guarantee to EPA that shall specify, at a minimum, the estimated cost of completing the Work, the basis upon which such cost was calculated, and the

proposed revised performance guarantee, including all proposed instruments or other documents required in order to make the proposed performance guarantee legally binding. The proposed revised or alternative performance guarantee must satisfy all requirements set forth or incorporated by reference in this Section. Performing Settling Defendants shall submit such proposed revised or alternative performance guarantee to the EPA Regional Financial Management Officer in accordance with Section XXVI (Notices and Submissions). EPA will notify Performing Settling Defendants in writing of its decision to accept or reject a revised or alternative performance guarantee submitted pursuant to this Paragraph. Within 30 days after receiving a written decision approving the proposed revised or alternative performance guarantee, Performing Settling Defendants shall execute or otherwise finalize all instruments or other documents required in order to make the selected performance guarantee legally binding in a form substantially identical to the documents submitted to EPA as part of the proposal, and such performance guarantee(s) shall thereupon be fully effective. Performing Settling Defendants shall submit copies of all executed and/or otherwise finalized instruments or other documents required in order to make the selected performance guarantee(s) legally binding to the EPA Regional Financial Management Officer within 30 days after receiving a written decision approving the proposed revised or alternative performance guarantee in accordance with Section XXVI (Notices and Submissions) and to the United States and EPA as specified in Section XXVI.

c. Release of Performance Guarantee. Performing Settling Defendants shall not release, cancel, or discontinue any performance

guarantee provided pursuant to this Section except as provided in this Paragraph. If Performing Settling Defendants receive written notice from EPA in accordance with Paragraph 49(b) that the Work has been fully and finally completed in accordance with the terms of this Consent Decree, or if EPA otherwise so notifies Performing Settling Defendants in writing, Performing Settling Defendants may thereafter release, cancel, or discontinue the performance guarantee(s) provided pursuant to this Section. In the event of a dispute, Performing Settling Defendants may release, cancel, or discontinue the performance guarantee(s) required hereunder only in accordance with a final administrative or judicial decision resolving such dispute pursuant to Section XIX (Dispute Resolution).

XIV. CERTIFICATE OF COMPLETION

49. Completion of the Remedial Action.

a. Within 90 days after Performing Settling Defendants conclude that the Remedial Action has been fully performed, and the Performance Standards have been achieved, Performing Settling Defendants shall schedule and conduct a pre-certification inspection to be attended by Performing Settling Defendants, DTSC and EPA. If, after the pre-certification inspection, Performing Settling Defendants still believe that the Remedial Action has been fully performed and the Performance Standards have been achieved, they shall submit a written report, with a copy to DTSC, requesting certification to EPA for approval pursuant to Section XI (EPA Approval of Plans and Other Submissions) within 30 days after the inspection. In the report, a registered professional engineer and Performing Settling Defendants' Project Coordinator, or other authorized representative, shall state that the Remedial Action has been completed in full satisfaction of the requirements of this Consent Decree. The written report shall include as-built drawings signed and stamped by a professional engineer. The report

shall contain the following statement, signed by an authorized representative of Performing Settling Defendants or Performing Settling Defendants' Project Coordinator:

> I certify under penalty of law that this document and all attachments were prepared under my direction or supervision in accordance with a system designed to assure that qualified personnel properly gather and evaluate the information submitted. Based on my inquiry of the person or persons who manage the system, or those persons directly responsible for gathering the information, the information submitted is, to the best of my knowledge and belief, true, accurate, and complete. I am aware that there are significant penalties for submitting false information, including the possibility of fine and imprisonment for knowing violations.

If, after completion of the pre-certification inspection and receipt and review of the written report, EPA, after reasonable opportunity for review and comment by DTSC, determines that the Remedial Action or any portion thereof has not been completed in accordance with this Consent Decree or that the Performance Standards have not been achieved, EPA will notify Performing Settling Defendants in writing of the activities that must be undertaken by Performing Settling Defendants pursuant to this Consent Decree to complete the Remedial Action and achieve the Performance Standards, provided, however, that EPA may only require Performing Settling Defendants to perform such activities pursuant to this Paragraph to the extent that such activities are consistent with the "scope of the remedy set forth in the ROD" as that term is defined in Paragraph 13. EPA will set forth in the notice a schedule for performance of such activities consistent with the Consent Decree and the SOW or require Performing Settling

Defendants to submit a schedule to EPA for approval pursuant to Section XI (EPA Approval of Plans and Other Submissions). Performing Settling Defendants shall perform all activities described in the notice in accordance with the specifications and schedules established pursuant to this Paragraph, subject to their right to invoke the dispute resolution procedures set forth in Section XIX (Dispute Resolution).

b. If EPA, after reasonable opportunity for review and comment by DTSC, concludes, based on the initial or any subsequent report requesting Certification of Completion of the Remedial Action, that the Remedial Action has been performed in accordance with this Consent Decree and that the Performance Standards have been achieved, EPA will timely so certify in writing to Performing Settling Defendants. This certification shall constitute the Certification of Completion of the Remedial Action for purposes of this Consent Decree, including, but not limited to, Section XXI (Covenants by Plaintiffs). Certification of Completion of the Remedial Action shall not affect Settling Defendants' remaining obligations under this Consent Decree.

50. Completion of the Work.

a. Within 90 days after Performing Settling Defendants conclude that all phases of the Work, other than any remaining activities required under Section VII (Remedy Review) have been fully performed, Performing Settling Defendants shall schedule and conduct a pre-certification inspection to be attended by Performing Settling Defendants, DTSC and EPA. If, after the pre-certification inspection, Performing Settling Defendants still believe that the Work has been fully performed, Performing Settling Defendants shall submit to EPA and DTSC a written report by a registered professional engineer stating that the Work has been completed in full satisfaction of the requirements of this Consent Decree. The report shall contain the statement

set forth in Paragraph 49 signed by an authorized representative of Performing Settling Defendants or Performing Settling Defendants' Project Coordinator. If, after review of the written report, EPA, after reasonable opportunity for review and comment by DTSC, determines that any portion of the Work has not been completed in accordance with this Consent Decree, EPA will notify Performing Settling Defendants in writing of the activities that must be undertaken by Performing Settling Defendants pursuant to this Consent Decree to complete the Work, provided, however, that EPA may only require Performing Settling Defendants to perform such activities pursuant to this Paragraph to the extent that such activities are consistent with the "scope of the remedy set forth in the ROD", as that term is defined in Paragraph 13. EPA will set forth in the notice a schedule for performance of such activities consistent with the ROD and the SOW or require Performing Settling Defendants to submit a schedule to EPA for approval pursuant to Section XI (EPA Approval of Plans and Other Submissions). Performing Settling Defendants shall perform all activities described in the notice in accordance with the specifications and schedules established therein, subject to their right to invoke the dispute resolution procedures set forth in Section XIX (Dispute Resolution).

b. If EPA, after reasonable opportunity for review and comment by DTSC, concludes, based on the initial or any subsequent request for Certification of Completion of the Work by Performing Settling Defendants, that the Work has been performed in accordance with this Consent Decree, EPA will so notify Performing Settling Defendants in writing.

XV. EMERGENCY RESPONSE

51. If any action or occurrence during the performance of the Work causes or threatens a release of Waste Material from the Site that constitutes an emergency situation or may present an immediate threat to public health or welfare

or the environment, Performing Settling Defendants shall, subject to Paragraph 52, immediately take all appropriate action to prevent, abate, or minimize such release or threat of release, and shall immediately notify the EPA's Project Coordinator, or, if the Project Coordinator is unavailable, EPA's Alternate Project Coordinator. If neither of these persons is available, the Performing Settling Defendant shall notify the EPA Emergency Response Unit, Region IX. Performing Settling Defendants shall take such actions in consultation with EPA's Project Coordinator or other available authorized EPA officer and in accordance with all applicable provisions of the Health and Safety Plans, the Contingency Plans, and any other applicable plans or documents developed pursuant to the SOW. In the event that Performing Settling Defendants fail to take appropriate response actions as required by this Section and EPA, or as appropriate, DTSC, takes such action instead, Performing Settling Defendants shall reimburse EPA and DTSC for all costs of the response action not inconsistent with the NCP under Section XVI (Payments for Response Costs).

52. Subject to Section XXI (Covenants by Plaintiffs), nothing in the preceding Paragraph or in this Consent Decree shall be deemed to limit any authority of the United States or DTSC (a) to take all appropriate action to protect human health and the environment or to prevent, abate, respond to, or minimize an actual or threatened release of Waste Material on, at, or from the Site, or (b) to direct or order such action, or seek an order from the Court, to protect human health and the environment or to prevent, abate, respond to, or minimize an actual or threatened release of Waste Material on, at, or from the Site.

XVI. PAYMENTS FOR RESPONSE COSTS

53. Payment by Settling Defendants for Past Response Costs

a. Within 30 days after the Effective Date, Performing Settling Defendants shall pay to EPA $2,617,266.14 (Two Million, Six Hundred and Seventeen Thousand, Two Hundred Sixty-Six Dollars and Fourteen Cents)

in payment for Past Response Costs and to DTSC $53,599.49 (Fifty-Three Thousand, Nine Hundred and Ninety-Nine Dollars and Forty-Nine Cents) in payment for Past Response Costs.

b. Ability-to-Pay Settling Defendants shall pay to EPA the amounts set out in Appendix F at the times set out therein.

c. Each De Minimis Settling Defendant shall pay to EPA the amount set out for it in Appendix G at the time set out therein.

d. The total amount to be paid by Settling Defendants to EPA pursuant to Paragraph 53(a)-(c) shall be deposited by EPA in the Cooper Drum Company Special Account to be retained and used to conduct or finance response actions at or in connection with the Site or to be transferred by EPA to the EPA Hazardous Substance Superfund. Payments to DTSC under this Section shall be deposited in the Toxic Substances Control Account established pursuant to Health and Safety Code § 25173.6.

54. Payments by Performing Settling Defendants for Interim Response Costs and Future Response Costs. Performing Settling Defendants shall pay to EPA and DTSC all Interim Response Costs and all Future Response Costs not inconsistent with the NCP incurred at the Site.

a. Performing Settling Defendants shall pay to EPA and DTSC all Interim Response Costs within 60 days after receipt of bills for Interim Response Costs from EPA and DTSC respectively, in accordance with Paragraph 55(a) (Instructions for Past Response Costs Payments and Interim Response Costs Payments). The bill from EPA for Interim Response Costs will include a regionally-prepared cost summary that includes direct and indirect costs incurred by EPA and its contractors along with backup documentation for such costs and a DOJ cost summary along with back up documentation for such costs. The bill from DTSC for Interim Response Costs will include a DTSC-prepared cost summary that includes direct and

indirect costs incurred by DTSC and its contractors along with backup documentation for those costs.

b. On a periodic basis, EPA will send Performing Settling Defendants a bill for Future Response Costs requiring payment that includes a regionally-prepared cost summary that includes direct and indirect costs incurred by EPA and its contractors and a DOJ case cost summary along with backup documentation for those costs. On a periodic basis, DTSC will send Performing Settling Defendants a bill for Future Response Costs requiring payment that includes a DTSC-prepared cost summary that includes direct and indirect costs incurred by DTSC and its contractors along with backup documentation for those costs Performing Settling Defendants shall make all payments within 60 days after Performing Settling Defendants' receipt of each bill requiring payment, in accordance with Paragraph 55(b) (Instructions for Future Response Costs Payments). The dispute resolution procedures set forth in Section XIX (Dispute Resolution) shall be the exclusive mechanism for resolving disputes regarding Performing Settling Defendants' obligation to reimburse the United States for its Future Response Costs.

c. The total amount to be paid to EPA by Performing Settling Defendants pursuant to Paragraphs 54(a) and (b) shall be deposited in the Cooper Drum Company Special Account to be retained and used to conduct or finance response actions at or in connection with the Site, or to be transferred by EPA to the EPA Hazardous Substance Superfund.

55. <u>Payment Instructions for Settling Defendants.</u>

a. <u>Instructions for Past Response Costs Payments and Interim Response Cost Payments</u>. All payments to the United States required elsewhere in this Consent Decree to be made in accordance with this Paragraph 55 shall be made at https://www.pay.gov to the U.S. Department

of Justice account, in accordance with instructions provided to Settling Defendants by the Financial Litigation Unit ("FLU") of the United States Attorney's Office for the Central District of California, Western Division, after the Effective Date or as otherwise agreed to by the Parties. The payment instructions provided by the Financial Litigation Unit shall include a Consolidated Debt Collection System ("CDCS") number, which shall be used to identify all payments required to be made in accordance with this Consent Decree. The FLU shall provide the payment instructions to:

Kenny Ogilvie
CDCPG Project Coordinator
EHS Support LLC
110 Kentzel Road
Pittsburgh, PA 15237412-855-3047 (Direct)
Kenny.Ogilvie@ehs-support.com

on behalf of Settling Defendants. Settling Defendants may change the individual(s) to receive payment instructions on their behalf by providing written notice of such change in accordance with Section XXVII (Notices and Submissions). When making payments under this Paragraph 55(a), Settling Defendants shall also comply with Paragraph 55(c).

b. Instructions for Future Response Costs Payments. All payments required, elsewhere in this Consent Decree, to be made in accordance with this Paragraph 55(b) shall be made by Fedwire EFT to:

Federal Reserve Bank of New York
ABA: 021030004
Account Number: 68010727
SWIFT Address: FRNYUS33
33 Liberty Street
New York, NY 10045

Field Tag 4200 of the Fedwire message should read as follows: "D 68010727 Environmental Protection Agency".

c. Instructions for All Payments to EPA. All payments made under Paragraphs 55(a) (Instructions for Past Response Costs Payments) or 55(b) (Instructions for Future Response Costs Payments) shall reference the CDCS Number, Site/Spill ID Number 091NPS, and DOJ case Number 90-11-2-09084. At the time of any payment required to be made in accordance with Paragraphs 53 or 54, Settling Defendants shall send notice that payment has been made to the United States and to EPA, in accordance with Section XXVI (Notices and Submissions) and to the EPA Cincinnati Finance Office by email at acctsreceivable.cinwd@epa.gov, or by mail at 26 Martin Luther King Drive, Cincinnati, Ohio 45268. Such notice shall also reference the CDCS Number, Site/Spill ID Number, and DOJ Case Number.

d. Instructions for all Payments to DTSC. All payments made by Settling Defendants to DTSC pursuant to this Consent Decree shall be made by check made payable to "DTSC" and shall bear on the face the project code of the Site (Site 300251). Payments shall be sent to:

Department of Toxic Substances Control
Accounting/Cashier
1001 I Street, 21st Floor
PO Box 806
Sacramento, CA 95812-0806

A photocopy of each payment check shall also be sent to the person designated by DTSC to receive submittals under this Consent Decree.

56. a. Performing Settling Defendants may contest any Future Response Costs billed under Paragraph 54 ("Payments by Performing Settling Defendants for Future Response Costs") if they determine that EPA has made a mathematical error or included a cost item that is not within the definition of Future Response Costs, or if they believe that EPA incurred excess costs as a direct result of an EPA action that was inconsistent with a specific provision or provisions of the NCP. Such objection shall be made in writing within 30 days

after receipt of the bill and must be sent to the United States pursuant to Section XXVI (Notices and Submissions). Any such objection shall specifically identify the contested Future Response Costs and the basis for objection. In the event of an objection, Performing Settling Defendants shall pay all uncontested Future Response Costs to the United States within 60 days after Performing Settling Defendants' receipt of the bill requiring payment. Simultaneously, Performing Settling Defendants shall establish, in a duly chartered bank or trust company, an interest-bearing escrow account that is insured by the Federal Deposit Insurance Corporation ("FDIC") and remit to that escrow account funds equivalent to the amount of the contested Future Response Costs. Performing Settling Defendants shall send to the United States, as provided in Section XXVI (Notices and Submissions), a copy of the transmittal letter and check paying the uncontested Future Response Costs, and a copy of the correspondence that establishes and funds the escrow account, including, but not limited to, information containing the identity of the bank or trust company and account under which the escrow account is established as well as a statement showing the initial balance of the escrow account. Simultaneously with establishment of the escrow account, Performing Settling Defendants shall initiate the Dispute Resolution procedures in Section XIX (Dispute Resolution). If the United States prevails in the dispute, Performing Settling Defendants shall pay the sums due (with accrued Interest) to the United States within ten days after resolution of the dispute. If Performing Settling Defendants prevail concerning any aspect of the contested costs, Performing Settling Defendants shall pay that portion of the costs (plus associated accrued Interest) for which they did not prevail to the United States within ten days after resolution of the dispute. Performing Settling Defendants shall be disbursed any balance of the escrow account. All payments to the United States under this Paragraph shall be made in accordance with Paragraph 55(b) (Instructions for Future Response Costs Payments).

b. If Performing Settling Defendants dispute a DTSC billing, or any part thereof, Performing Settling Defendants shall notify DTSC's assigned project manager and attempt to informally resolve the dispute with DTSC's project coordinator and branch chief. If Performing Settling Defendants desire to formally request dispute resolution with regard to the billing, Performing Settling Defendants shall file a request for dispute resolution in writing within 45 days of receipt of the billing in dispute. The written request shall describe all issues in dispute and shall set forth the reasons for the dispute, both factual and legal. If the dispute pertains only to a portion of the costs included in the invoice, Performing Settling Defendants shall pay all costs which are undisputed in accordance with Paragraph 55(d). The filing of a notice of dispute pursuant to this Paragraph shall not stay the accrual of Interest on any unpaid costs pending resolution of the dispute. The written request shall be sent to:

Chief, Collections and Resolution Unit
Department of Toxic Substances Control
PO Box 806
Sacramento, CA 96812-0806

A copy of the written request for dispute resolution shall also be sent to the person designated by DTSC to receive submittals under this Consent Decree. A decision on the billing dispute will be rendered by the Chief, Collections and Resolution Unit, or other DTSC designee.

c. The dispute resolution procedures set forth in this Paragraph in conjunction with the procedures set forth in Section XIX (Dispute Resolution) shall be the exclusive mechanism for resolving disputes regarding Performing Settling Defendants' obligation to reimburse the United States or DTSC for its Future Response Costs.

57. Interest. In the event that any payment for Past Response Costs or Future Response Costs required under this Section is not made by the date

required, affected Settling Defendants shall pay Interest to EPA or DTSC on the unpaid balance as appropriate. The Interest to be paid on Past Response Costs under this Paragraph shall begin to accrue on the date due. The Interest on Future Response Costs shall begin to accrue on the due date of the bill. The Interest shall accrue through the date of Settling Defendants' payment. Payments of Interest made under this Paragraph shall be in addition to such other remedies or sanctions available to Plaintiffs by virtue of Settling Defendants' failure to make timely payments under this Section including, but not limited to, payment of stipulated penalties pursuant to Paragraph 79.

58. Payments between Settling Defendants. All payments to Performing Settling Defendants by Contributing Settling Defendants will be made in accordance with Appendix H.

XVII. INDEMNIFICATION AND INSURANCE

59. Performing Settling Defendants' Indemnification of the United States.

a. The United States and DTSC do not assume any liability by entering into this Consent Decree or by virtue of any designation of Performing Settling Defendants as EPA's authorized representatives under Section 104(e) of CERCLA, 42 U.S.C. § 9604(e). Performing Settling Defendants shall indemnify, save and hold harmless the United States and its officials, agents, employees, contractors, subcontractors, and representatives for or from any and all claims or causes of action arising from, or on account of, negligent or other wrongful acts or omissions of Performing Settling Defendants, their officers, directors, employees, agents, contractors, subcontractors, and any persons acting on their behalf or under their control, in carrying out activities pursuant to this Consent Decree, including, but not limited to, any claims arising from any designation of Performing Settling Defendants as EPA's authorized representatives under Section 104(e) of CERCLA. Further, Performing Settling Defendants agree to pay the United

States and DTSC all costs they incur including, but not limited to, attorneys' fees and other expenses of litigation and settlement arising from, or on account of, claims made against the United States or DTSC based on negligent or other wrongful acts or omissions of Performing Settling Defendants, their officers, directors, employees, agents, contractors, subcontractors, and any persons acting on their behalf or under their control, in carrying out activities pursuant to this Consent Decree. The United States and DTSC shall not be held out as parties to any contract entered into by or on behalf of Performing Settling Defendants in carrying out activities pursuant to this Consent Decree. Neither Performing Settling Defendants nor any such contractor shall be considered an agent of the United States or DTSC.

b. The United States and DTSC shall give Performing Settling Defendants notice of any claim for which the United States or DTSC plans to seek indemnification pursuant to this Paragraph 59(b), and shall consult with Performing Settling Defendants prior to settling such claim.

60. Performing Settling Defendants covenant not to sue and agree not to assert any claims or causes of action against the United States or DTSC for damages or reimbursement or for set-off of any payments made or to be made to the United States or DTSC, arising from or on account of any contract, agreement, or arrangement between any one or more of Performing Settling Defendants and any person for performance of Work on or relating to the Site, including, but not limited to, claims on account of construction delays. In addition, Performing Settling Defendants shall indemnify and hold harmless the United States and DTSC with respect to any and all claims for damages or reimbursement arising from or on account of any contract, agreement, or arrangement between any one or more of Performing Settling Defendants and any person for performance of Work

on or relating to the Site, including, but not limited to, claims on account of construction delays.

61. No later than 15 days before commencing any on-site Work, Performing Settling Defendants or their contractors shall secure, and shall maintain until the first anniversary after EPA's Certification of Completion pursuant to Section XIV (Certificate of Completion), commercial general liability insurance with limits of $5,000,000 (Five Million Dollars), for any one occurrence, and automobile liability insurance with limits of $2,000,000 (Two Million Dollars), combined single limit, naming the United States as an additional insured with respect to all liability arising out of the activities performed by or on behalf of Performing Settling Defendants pursuant to this Consent Decree. In addition, for the duration of this Consent Decree, Performing Settling Defendants shall satisfy, or shall ensure that their respective contractors or subcontractors satisfy, all applicable laws and regulations regarding the provision of worker's compensation insurance for all persons performing the Work on behalf of Performing Settling Defendants in furtherance of this Consent Decree. Prior to commencement of the Work under this Consent Decree, Performing Settling Defendants shall provide to EPA and DTSC certificates of such insurance and a copy of each insurance policy. Performing Settling Defendants shall resubmit such certificates and copies of policies each year on the anniversary of the Effective Date. If Performing Settling Defendants demonstrate by evidence satisfactory to EPA and DTSC that any contractor or subcontractor maintains insurance equivalent to that described above, or insurance covering the same risks but in a lesser amount, then, with respect to that contractor or subcontractor, Performing Settling Defendants need provide only that portion of the insurance described above which is not maintained by the contractor or subcontractor.

// //

// //

XVIII. FORCE MAJEURE

62. "Force Majeure," for purposes of this Consent Decree, is defined as any event arising from causes beyond the control of Performing Settling Defendants, of any entity controlled by Performing Settling Defendants, or of Performing Settling Defendants' contractors that delays or prevents the performance of any obligation under this Consent Decree despite Performing Settling Defendants' best efforts to fulfill the obligation. The requirement that Performing Settling Defendants exercise "best efforts to fulfill the obligation" includes using best efforts to anticipate any potential force majeure and best efforts to address the effects of any potential force majeure (a) as it is occurring and (b) following the potential force majeure such that the delay and any adverse effects of the delay are minimized to the greatest extent possible. "Force Majeure" does not include financial inability to complete the Work or a failure to attain the Performance Standards unless such financial inability is solely caused by third parties or circumstances outside the control of the Performing Settling Defendants.

63. If any event occurs or has occurred that may delay the performance of any obligation under this Consent Decree for which Performing Settling Defendants intend or may intend to assert a claim of force majeure, Performing Settling Defendants shall notify EPA's Project Coordinator orally or, in his or her absence, EPA's Alternate Project Coordinator or, in the event both of EPA's designated representatives are unavailable, the Assistant Director of the Superfund Division, EPA Region IX, within five days of when Performing Settling Defendants first knew that the event would cause a delay. Within ten days thereafter, Performing Settling Defendants shall provide in writing to EPA and DTSC an explanation and description of the reasons for the delay; the anticipated duration of the delay; all actions taken or to be taken to prevent or minimize the delay; a schedule for implementation of any measures to be taken to prevent or mitigate the delay or the effect of the delay; Performing Settling Defendants'

rationale for attributing such delay to a force majeure; and a statement as to whether, in the opinion of Performing Settling Defendants, such event may cause or contribute to an endangerment to public health, welfare or the environment. Performing Settling Defendants shall include with any notice all available documentation supporting their claim that the delay was attributable to a force majeure. Performing Settling Defendants shall be deemed to know of any circumstance of which Performing Settling Defendants or Performing Settling Defendants' contractors knew or should have known. Failure to comply with the above requirements regarding an event shall preclude Performing Settling Defendants from receiving a determination of Force Majeure regarding that event, provided, however, that if EPA, despite the late notice, is able to assess to its satisfaction whether the event is a Force Majeure under Paragraph 62 and whether Performing Settling Defendants have exercised their best efforts under Paragraph 62, EPA, in its unreviewable discretion, may excuse in writing Performing Settling Defendants' failure to submit timely notices under this Paragraph.

64. If EPA, after reasonable opportunity for review and comment by DTSC, agrees that the delay or anticipated delay is attributable to a Force Majeure, the time for performance of the obligations under this Consent Decree that are affected by the Force Majeure will be extended by EPA, after reasonable opportunity for review and comment by DTSC, for such time as is necessary to complete those obligations. An extension of the time for performance of the obligations affected by the Force Majeure shall not, of itself, extend the time for performance of any other obligation. If EPA does not agree that the delay or anticipated delay has been or will be caused by a Force Majeure, EPA will promptly notify Performing Settling Defendants in writing of its decision. If EPA, after reasonable opportunity for review and comment by DTSC, agrees that the delay is attributable to a Force Majeure, EPA will notify Performing Settling

Defendants in writing of the length of the extension, if any, for performance of the obligations affected by the Force Majeure.

65. If Performing Settling Defendants elect to invoke the dispute resolution procedures set forth in Section XIX (Dispute Resolution), they shall do so no later than 15 days after receipt of EPA's notice. In any such proceeding, Performing Settling Defendants shall have the burden of demonstrating by a preponderance of the evidence that the delay or anticipated delay has been or will be caused by a Force Majeure, that the duration of the delay or the extension sought was or will be warranted under the circumstances, that best efforts were or will be exercised to avoid and mitigate the effects of the delay, and that Performing Settling Defendants complied with the requirements of Paragraphs 62 and 63. If Performing Settling Defendants carry this burden, the delay at issue shall be deemed not to be a violation by Performing Settling Defendants of the affected obligation of this Consent Decree identified to EPA, DTSC and the Court.

XIX. DISPUTE RESOLUTION

66. Unless otherwise expressly provided for in this Consent Decree, the dispute resolution procedures of this Section shall be the exclusive mechanism to resolve disputes regarding this Consent Decree. However, the procedures set forth in this Section shall not apply to actions by the United States and/or DTSC to enforce obligations of Performing Settling Defendants that have not been disputed in accordance with this Section.

67. Any dispute regarding this Consent Decree shall in the first instance be the subject of informal negotiations between the parties to the dispute. The period for informal negotiations shall not exceed 20 days from the time the dispute arises, unless it is modified by written agreement of the parties to the dispute. The dispute shall be considered to have arisen when one party sends the other parties a written Notice of Dispute.

68. Statements of Position.

a. In the event that the parties cannot resolve a dispute by informal negotiations under the preceding Paragraph, then the position advanced by EPA and/or DTSC shall be considered binding unless, within 21 days after the conclusion of the informal negotiation period, Performing Settling Defendants invoke the formal dispute resolution procedures of this Section by serving on the United States and/or DTSC a written Statement of Position on the matter in dispute, including, but not limited to, any factual data, analysis or opinion supporting that position and any supporting documentation relied upon by Performing Settling Defendants. The Statement of Position shall specify Performing Settling Defendants' position as to whether formal dispute resolution should proceed under Paragraph 69 (Record Review) or Paragraph 70.

b. Within 30 days after receipt of Performing Settling Defendants' Statement of Position, EPA and/or DTSC will serve on Performing Settling Defendants its/their Statement of Position, including, but not limited to, any factual data, analysis, or opinion supporting that position and all supporting documentation relied upon by EPA and/or DTSC. EPA's and/or DTSC's Statement of Position shall include a statement as to whether formal dispute resolution should proceed under Paragraph 69 (Record Review) or Paragraph 70. Within ten days after receipt of EPA's and/or DTSC's Statement of Position, Performing Settling Defendants may submit a Reply. In the event of a dispute between EPA and the Performing Settling Defendants, DTSC shall have the option to submit a Statement of Position, and DTSC's Statement of Position shall be part of the administrative record. In the event of a dispute between DTSC and the Performing Settling Defendants, EPA shall have the option to submit a Statement of Position, and EPA's Statement of Position shall be part of the administrative record.

c. If there is disagreement between EPA and/or DTSC and Performing Settling Defendants as to whether dispute resolution should proceed under Paragraph 69 (Record Review) or Paragraph 70, the parties to the dispute shall follow the procedures set forth in the paragraph determined by EPA and/or DTSC to be applicable. However, if Performing Settling Defendants ultimately appeal to the Court to resolve the dispute, the Court shall determine which paragraph is applicable in accordance with the standards of applicability set forth in Paragraphs 69 and 70.

69. Record Review. Formal dispute resolution for disputes pertaining to the selection or adequacy of any response action and all other disputes that are accorded review on the administrative record under applicable principles of administrative law shall be conducted pursuant to the procedures set forth in this Paragraph. For purposes of this Paragraph, the adequacy of any response action includes, without limitation, the adequacy or appropriateness of plans, procedures to implement plans, or any other items related to implementation of the response action requiring approval by EPA and/or DTSC under this Consent Decree, and the adequacy of the performance of response actions taken pursuant to this Consent Decree. Nothing in this Consent Decree shall be construed to allow any dispute by Settling Defendants regarding the validity of the provisions of the ROD or any Consent Decree ROD Amendment.

a. An administrative record of the dispute shall be maintained by EPA and/or DTSC and shall contain all statements of position, including supporting documentation, submitted pursuant to this Section. Where appropriate, EPA and/or DTSC may allow submission of supplemental statements of position by the parties to the dispute.

b. The Director of the Superfund Division, EPA Region IX, and/or a representative of DTSC will issue a final administrative decision resolving the dispute based on the administrative record described in Paragraph 69(a).

This decision shall be binding upon Performing Settling Defendants, subject only to the right to seek judicial review pursuant to Paragraphs 69(c) and 73(d).

c. Any administrative decision made by EPA and/or DTSC pursuant to Paragraph 69(b) shall be reviewable by this Court, provided that a motion for judicial review of the decision is filed by Performing Settling Defendants with the Court and served on all Parties within 30 days after receipt of EPA's and/or DTSC's decision. The motion shall include a description of the matter in dispute, the efforts made by the parties to resolve it, the relief requested, and the schedule, if any, within which the dispute must be resolved to ensure orderly implementation of this Consent Decree. The United States on behalf of EPA and/or a representative of DTSC may file a response to Performing Settling Defendants' motion.

d. In proceedings on any dispute governed by this Paragraph, Performing Settling Defendants shall have the burden of demonstrating that the decision of the Superfund Division Director or the representative of DTSC is arbitrary and capricious or otherwise not in accordance with law. Judicial review of EPA's and/or DTSC's decision shall be on the administrative record compiled pursuant to Paragraph 69(a).

70. Formal dispute resolution for disputes that neither pertain to the selection or adequacy of any response action nor are otherwise accorded review on the administrative record under applicable principles of administrative law shall be governed by this Paragraph.

a. Following receipt of a Settling Defendant's Statement of Position submitted pursuant to Paragraph 68(b), the Director of the Superfund Division, EPA Region IX and/or a representative of DTSC will issue a final decision resolving the dispute. The Superfund Division Director's and/or a representative of DTSC's decision shall be binding on

Performing Settling Defendants unless, within 30 days after receipt of the decision, Performing Settling Defendants file with the Court and serve on the parties a motion for judicial review of the decision setting forth the matter in dispute, the efforts made by the parties to resolve it, the relief requested, and the schedule, if any, within which the dispute must be resolved to ensure orderly implementation of the Consent Decree. The United States on behalf of EPA and/or a representative of DTSC may file a response to Performing Settling Defendants' motion.

b. Notwithstanding Section I (Background) Paragraph N (CERCLA Section 113(j) Record Review of ROD and Work) judicial review of any dispute governed by this Paragraph shall be governed by applicable principles of law.

71. The invocation of formal dispute resolution procedures under this Section shall not extend, postpone or affect in any way any obligation of Performing Settling Defendants under this Consent Decree, not directly in dispute or necessarily affected thereby, unless EPA and/or DTSC or the Court agrees otherwise. Stipulated penalties with respect to the disputed matter shall continue to accrue but payment shall be stayed pending resolution of the dispute. Notwithstanding the stay of payment, stipulated penalties shall accrue from the first day of noncompliance with any applicable provision of this Consent Decree. In the event that Performing Settling Defendants do not prevail on the disputed issue, stipulated penalties shall be assessed and paid as provided in Section XX (Stipulated Penalties).

XX. STIPULATED PENALTIES

72. Performing Settling Defendants shall be liable for stipulated penalties in the amounts set forth in Paragraphs 73 and 74 to the United States and DTSC for failure to comply with the requirements of this Consent Decree specified below, unless excused under Section XVIII (Force Majeure) or Section XIX (Dispute

Resolution). "Compliance" by Performing Settling Defendants shall include completion of all payments and activities required under this Consent Decree or any plan, report, or other deliverable approved under this Consent Decree, in accordance with all applicable requirements of law, this Consent Decree, the SOW, and any plans, reports, or other deliverables approved under this Consent Decree and within the specified time schedules established by and approved under this Consent Decree.

73. Stipulated Penalty Amounts - Work (Including Payments and Excluding Plans, Reports, and Other Deliverables).

a. The following stipulated penalties shall accrue per violation per day for any noncompliance identified in Paragraph 73(b):

Penalty Per Violation Per Day	Period of Noncompliance
$1,000	1st through 14th day
$2,500	15th through 30th day
$5,000	31st day and beyond

b. Compliance Milestones. Failure to submit or perform any of the following within the specified time schedule provided for in this Decree shall incur the stipulated penalties set out in Paragraph 73(a).

1. Initiation of Construction of Remedial Action for each OU

2. Completion of Construction of Remedial Action for each OU

3. Achievement of Operational and Functional Status for each OU

4. Timely Payment for Past Response Costs, Interim Response Costs and Future Response Costs as required under this Consent Decree

//

74. Stipulated Penalty Amounts-Plans, Reports, and Other Deliverables The following stipulated penalties shall accrue per violation per day for failure to submit timely or adequate reports or other plans or deliverables pursuant to the Consent Decree.

Penalty Per Violation Per Day	Period of Noncompliance
$ 750	1st through 14th day
$1,250	15th through 30th day
$1,750	31st day and beyond

75. In the event that EPA assumes performance of a portion or all of the Work pursuant to Paragraph 90 ("Work Takeover"), Performing Settling Defendants shall be liable for a stipulated penalty in the amount of $1,000,000 (One Million Dollars). Stipulated Penalties under this Paragraph are in addition to the remedies available under Paragraphs 47 (Funding for Work Takeover) and 93(Work Takeover). The imposition of any such penalty will be subject to the provisions of Section XIX (Dispute Resolution).

76. Each Contributing Settling Defendant, Ability-To-Pay Settling Defendant and De Minimis Settling Defendant shall be liable for stipulated penalties in the following amounts for each day that it fails to make payments of monies as required by this Consent Decree.

Contributing Settling Defendants	$1,000
Ability-To-Pay Settling Defendants	$ 250
De Minimis Settling Defendants	$ 250

77. All penalties shall begin to accrue on the day after the complete performance is due or the day a violation occurs, whichever is later, and shall continue to accrue through the final day of the correction of the noncompliance or completion of the activity. However, stipulated penalties shall not accrue: (a) with respect to a deficient submission under Section XI (EPA Approval of Plans and Other Submissions), during the period, if any, beginning on the 31st day after

EPA's receipt of such submission until the date that EPA notifies Performing Settling Defendants of any deficiency; (b) with respect to a decision by the Director of the Superfund Division, EPA Region IX, under Paragraph 69 or 70 of Section XIX (Dispute Resolution), during the period, if any, beginning on the 31st day after the date that Performing Settling Defendants' reply to EPA's Statement of Position is received until the date that the Director issues a final decision regarding such dispute; or (c) with respect to judicial review by this Court of any dispute under Section XIX (Dispute Resolution), during the period, if any, beginning on the 31st day after the Court's receipt of the final submission regarding the dispute until the date that the Court issues a final decision regarding such dispute. Nothing in this Consent Decree shall prevent the simultaneous accrual of separate penalties for separate violations of this Consent Decree.

78. Following EPA's determination that Performing Settling Defendants have failed to comply with a requirement of this Consent Decree, or DTSC's determination that Performing Settling Defendants have failed to comply with Paragraph 55, EPA, or as appropriate DTSC, will give Performing Settling Defendants written notification of the same and describe the noncompliance. If such noncompliance relates to a deficiency in a submittal, Performing Settling Defendants will have 30 days within which to cure such deficiency. For any other non-compliance, it is within EPA's discretion whether to give the Performing Settling Defendants an opportunity to cure the deficiency prior to a demand for penalties. EPA or DTSC may send Performing Settling Defendants a written demand for the payment of the penalties. Penalties shall accrue as provided in the preceding Paragraph whether or not EPA has notified Performing Settling Defendants of a violation.

79. All penalties accruing under this Section shall be due and payable to the United States and DTSC within 30 days after Performing Settling Defendants' receipt from EPA, or, as appropriate, DTSC, of a demand for payment of the

penalties, unless Performing Settling Defendants invoke the Dispute Resolution procedures under Section XIX (Dispute Resolution) within the 30-day period. All payments to the United States under this Section shall indicate that the payment is for stipulated penalties, and shall be made in accordance with Paragraph 55(b) (Instructions for Future Response Costs Payments). All payments to DTSC under this section shall be made in accordance with Paragraph 55(d).

80. Penalties shall continue to accrue as provided in Paragraph 77 during any dispute resolution period, but need not be paid until the following:

a. If the dispute is resolved by agreement of the Parties or by a decision of EPA that is not appealed to this Court, accrued penalties determined to be owed shall be paid to EPA within 30 days after the agreement or the receipt of EPA's decision or order;

b. If the dispute is appealed to this Court and the United States prevails in whole or in part, Performing Settling Defendants shall pay all accrued penalties determined by the Court to be owed to EPA within 60 days after receipt of the Court's decision or order, except as provided in Paragraph 80.c.;

c. If the District Court's decision is appealed by any Party, Performing Settling Defendants shall pay all accrued penalties determined by the District Court to be owed to the United States into an Interest-bearing escrow account, established at a duly chartered bank or trust company that is insured by the FDIC, within 60 days after receipt of the Court's decision or order. Penalties shall be paid into this account as they continue to accrue, at least every 60 days. Within 15 days after receipt of the final appellate court decision, the escrow agent shall pay the balance of the account to EPA or to Performing Settling Defendants to the extent that they prevail.

81. If Performing Settling Defendants fail to pay stipulated penalties when due, Performing Settling Defendants shall pay Interest on the unpaid

stipulated penalties as follows: (a) if Performing Settling Defendants have timely invoked dispute resolution such that the obligation to pay stipulated penalties has been stayed pending the outcome of the dispute resolution, Interest shall accrue from the date stipulated penalties are due pursuant to Paragraph 80 until the date of payment; and (b) if Performing Settling Defendants fail to timely invoke dispute resolution, Interest shall accrue from the date of demand under Paragraph 78 until the date of payment. If Performing Settling Defendants fail to pay stipulated penalties and Interest when due, the United States may institute proceedings to collect the penalties and Interest.

82. The payment of penalties and Interest, if any, shall not alter in any way Performing Settling Defendants' obligation to complete the performance of the Work required under this Consent Decree.

83. Nothing in this Consent Decree shall be construed as prohibiting, altering, or in any way limiting the ability of the United States or DTSC to seek any other remedies or sanctions available by virtue of Performing Settling Defendants' violation of this Decree or of the statutes and regulations upon which it is based, including, but not limited to, penalties pursuant to Section 122(l) of CERCLA, 42 U.S.C. § 9622(l), provided, however, that the United States or DTSC shall not seek civil penalties pursuant to Section 122(l) of CERCLA for any violation for which a stipulated penalty is provided in this Consent Decree, except in the case of a willful violation of the Consent Decree.

84. Notwithstanding any other provision of this Section, the United States or DTSC may, in its unreviewable discretion, waive any portion of stipulated penalties that have accrued pursuant to this Consent Decree.

XXI. <u>COVENANTS BY PLAINTIFFS</u>

85. In consideration of the actions that will be performed and the payments that will be made by Settling Defendants under this Consent Decree, and except as specifically provided in this Paragraph and in Paragraphs 86, 87 (United

States' Pre- and Post-Certification Reservations) and 89 (General Reservations of Rights), the United States covenants not to sue or to take administrative action against Settling Defendants pursuant to Sections 106 and 107(a) of CERCLA, 42 U.S.C. §§ 9606 and 9607(a), and DTSC covenants not to sue or take administrative action against Settling Defendants pursuant to Section 107(a) of CERCLA, 42 U.S.C.§ 9607(a) or Health and Safety Code § 25358.3 and 25360, relating to the Site. These covenants shall take effect for each Ability-to-Pay Settling Defendant, each De Minimis Settling Defendant and, except with respect to future obligations pursuant to this Consent Decree, Performing Settling Defendants, upon receipt by EPA and DTSC from each such Settling Defendant of the payments required by Section XVI (Payments for Past Response Costs) and any Interest or stipulated penalties due thereon under Paragraph 57 (Interest) or Section XX (Stipulated Penalties). These covenants not to sue shall take effect for each Contributing Settling Defendant upon EPA's and DTSC's receipt of notification, pursuant to Paragraph 6.d., that such Contributing Settling Defendant has discharged its payment obligations pursuant to this Decree. With respect to future obligations pursuant to this Consent Decree, these covenants shall take effect for Performing Settling Defendants upon Certification of Completion of Remedial Action by EPA pursuant to Paragraph 50(b) of Section XIV (Certificate of Completion). These covenants are conditioned upon the satisfactory performance by Settling Defendants of their obligations under this Consent Decree. These covenants extend only to Settling Defendants and do not extend to any other person.

a. This covenant not to sue for Ability-to-Pay Settling Defendants is also conditioned upon the veracity and completeness of any financial information previously provided to EPA by Ability-to-Pay Settling Defendants. If any such financial information is subsequently determined by EPA to be false or, in any material respect, inaccurate, the submitting Ability-to-Pay Settling Defendant shall forfeit all payments made pursuant

to this Consent Decree and this covenant not to sue and the contribution protection shall be null and void. Such forfeiture shall not constitute liquidated damages and shall not in any way foreclose the United States' right to pursue any other causes of action arising from the Ability-to-Pay Settling Defendant's false or materially inaccurate information.

b. Notwithstanding any other provision in this Consent Decree, the United States and DTSC reserve, and this Consent Decree is without prejudice to, the right to institute proceedings against any individual De Minimis Settling Defendant in this action or a new action or to issue an administrative order to any individual De Minimis Settling Defendant seeking to compel that De Minimis Settling Defendant to perform response actions relating to the Site, and/or to reimburse the United States for additional costs of response, if total costs of implementing the Remedial Action in the ROD, or any amendments thereto, are incurred by the United States or any other person in excess of $35,000,000 (Thirty-Five Million Dollars) (exclusive of EPA's oversight costs) from the Effective Date of this Consent Decree until issuance of the Certificate of Completion of the Remedial Action.

86. United States' Pre-Certification Reservations. Subject only to the provisions of Paragraph 13(b) of this Consent Decree, the United States and DTSC reserve, and this Consent Decree is without prejudice to, the right to institute proceedings in this action or in a new action, and/or to issue an administrative order, seeking to compel Performing Settling Defendants to perform further response actions at the Site and/or to pay the United States or DTSC for additional costs of response if, (a) prior to Certification of Completion of the Remedial Action, (1) conditions at the Site, previously unknown to EPA or DTSC, are discovered, or (2) information, previously unknown to EPA or DTSC, is received, in whole or in part, and (b) EPA, after reasonable opportunity for review and

comment by DTSC, determines that these previously unknown conditions or information together with any other relevant information indicates that the Remedial Action is not protective of human health or the environment.

87. United States' Post-Certification Reservations. Subject only to the provisions of Paragraph 13(b) of this Consent Decree, the United States and DTSC reserve, and this Consent Decree is without prejudice to, the right to institute proceedings in this action or in a new action, and/or to issue an administrative order, seeking to compel Performing Settling Defendants to perform further response actions at the Site and/or to pay the United States and DTSC for additional costs of response if, (a) subsequent to Certification of Completion of the Remedial Action, (1) conditions at the Site, previously unknown to EPA or DTSC, are discovered, or (2) information, previously unknown to EPA and DTSC, is received, in whole or in part, and (b) EPA, after reasonable opportunity for review and comment by DTSC, determines that these previously unknown conditions or this information together with other relevant information indicate that the Remedial Action is not protective of human health or the environment.

88. For purposes of Paragraph 86 (United States' Pre-Certification Reservations), the information and the conditions known to EPA or DTSC will include only that information and those conditions known to EPA as of the date this Consent Decree is lodged. For purposes of Paragraph 87 (United States' Post-Certification Reservations), the information and the conditions known to EPA or DTSC shall include only that information and those conditions known to EPA as of the date of Certification of Completion of the Remedial Action and set forth in the ROD, the administrative record supporting the ROD, the post-ROD administrative record, or in any information received by EPA or DTSC pursuant to the requirements of this Consent Decree prior to Certification of Completion of the Remedial Action.

89. General Reservations of Rights. The United States and DTSC reserve, and this Consent Decree is without prejudice to, all rights against Settling Defendants with respect to all matters not expressly included within Plaintiff's covenants. Notwithstanding any other provision of this Consent Decree, the United States and DTSC reserve all rights against Performing Settling Defendants, and all rights other than those set out in subsection (i), below, against Contributing Settling Defendants and De Minimis Settling Defendants, and all rights other than those set out in subsections (i) and (j), below, against Ability-to-Pay Settling Defendants, with respect to:

a. liability for failure by such Settling Defendant to meet a requirement of this Consent Decree;

b. liability arising from the past, present, or future disposal, release, or threat of release of Waste Material outside of the Site;

c. liability based on the ownership of the Site when such ownership commences after signature of this Consent Decree by Settling Defendants;

d. liability based on the operation of the Site when such operation commences after signature of this Consent Decree by Settling Defendants and does not arise from Settling Defendants' performance of the Work;

e. liability based on transportation, treatment, storage, or disposal, or arrangement for transportation, treatment, storage or disposal of Waste Material at or from the Site, other than as provided in the ROD, the Work, or otherwise ordered by EPA, after signature of this Consent Decree by Settling Defendants;

f. liability for damages for injury to, destruction of, or loss of natural resources, and for the costs of any natural resource damage assessments;

g. criminal liability;

h. liability for violations of federal or state law which occur during or after implementation of the Work;

i. liability, prior to Certification of Completion of the Remedial Action, for additional response actions that EPA determines are necessary to achieve and maintain Performance Standards, or to carry out and maintain the effectiveness of the remedy set forth in the ROD, but that cannot be required pursuant to Paragraph 13 (Modifications of SOW or Related Work Plans); and

j. liability for costs of removal or remedial action involving aquifers underlying the Gaspur Aquifer, including the Exposition Aquifer subject to the provisions of Paragraph 13(b).

90. Work Takeover.

a. In the event EPA determines that Performing Settling Defendants have (1) ceased implementation of any portion of the Work, or (2) are seriously or repeatedly deficient or late in their performance of the Work, or (3) are implementing the Work in a manner that may cause an endangerment to human health or the environment, EPA may issue a written notice ("Work Takeover Notice") to Performing Settling Defendants. Any Work Takeover Notice issued by EPA will specify the grounds upon which such notice was issued and will provide Performing Settling Defendants a period of 30 days within which to remedy the circumstances giving rise to EPA's issuance of such notice.

b. If, after expiration of the 30-day notice period specified in Paragraph 85a., Performing Settling Defendants have not remedied to EPA's satisfaction the circumstances giving rise to EPA's issuance of the relevant Work Takeover Notice, EPA may at any time thereafter assume the performance of all or any portion(s) of the Work as EPA deems necessary ("Work Takeover"). EPA will notify Performing Settling Defendants in

writing (which writing may be electronic) if EPA determines that implementation of a Work Takeover is warranted under this Paragraph 90.b. Funding of Work Takeover costs is addressed under Paragraph 47.

c. Performing Settling Defendants may invoke the procedures set forth in Paragraph 69 (Record Review), to dispute EPA's implementation of a Work Takeover under Paragraph 90. However, notwithstanding Performing Settling Defendants' invocation of such dispute resolution procedures, and during the pendency of any such dispute, EPA may in its sole discretion commence and continue a Work Takeover under Paragraph 90 until the earlier of (1) the date that Performing Settling Defendants remedy, to EPA's satisfaction, the circumstances giving rise to EPA's issuance of the relevant Work Takeover Notice, or (2) the date that a final decision is rendered in accordance with Paragraph 69 (Record Review) requiring EPA to terminate such Work Takeover.

91. Notwithstanding any other provision of this Consent Decree, the United States and DTSC retain all authority and reserve all rights to take any and all response actions authorized by law.

XXII. COVENANTS BY SETTLING DEFENDANTS

92. Covenants by Settling Defendants. Subject to the reservations in Paragraph 94, Settling Defendants covenant not to sue and agree not to assert any claims or causes of action against the United States or DTSC with respect to the Site, and this Consent Decree, including, but not limited to:

a. any direct or indirect claim for reimbursement from the Hazardous Substance Superfund through CERCLA Sections 106(b)(2), 107, 111, 112, 113 or any other provision of law;

b. any claims under CERCLA Sections 107 or 113, RCRA Section 7002(a), 42 U.S.C § 6972(a), or state law regarding the Site and this Consent Decree; or

c. any claims arising out of response actions at or in connection with the Site, including any claim under the United States Constitution, the California Constitution, the Tucker Act, 28 U.S.C. § 1491, the Equal Access to Justice Act, 28 U.S.C. § 2412, or at common law.

93. Except as provided in Paragraph 96 (Claims Against De Minimis Parties, Ability-to-Pay Parties, and Other Persons That Received Special Notice), and Paragraph 101 (Res Judicata and Other Defenses), the covenants in this Section shall not apply if the United States or DTSC brings a cause of action or issues an order pursuant to any of the reservations in Section XXI (Covenants by Plaintiffs), other than in Paragraphs 89.a (claims for failure to meet a requirement of the Consent Decree), 89.g (criminal liability), and 89.h (violations of federal/state law during or after implementation of the Work), but only to the extent that Settling Defendants' claims arise from the same response action, response costs, or damages that the United States or DTSC is seeking pursuant to the applicable reservation.

94. Settling Defendants reserve, and this Consent Decree is without prejudice to, claims against the United States or DTSC, subject to the provisions of Chapter 171 of Title 28 of the United States Code, and brought pursuant to any statute other than CERCLA or RCRA and for which the waiver of sovereign immunity is found in a statute other than CERCLA or RCRA, for money damages for injury or loss of property or personal injury or death caused by the negligent or wrongful act or omission of any employee of the United States as that term is defined in 28 U.S.C. § 2671, while acting within the scope of his or her office or employment under circumstances where the United States, if a private person, would be liable to the claimant in accordance with the law of the place where the act or omission occurred. However, the foregoing shall not include any claim based on EPA's selection of response actions, or the oversight or approval of Performing Settling Defendants' plans, reports, other deliverables or activities.

95. Nothing in this Consent Decree shall be deemed to constitute preauthorization of a claim within the meaning of Section 111 of CERCLA, 42 U.S.C. § 9611, or 40 C.F.R. § 300.700(d).

96. Claims against De Minimis Parties, Ability-to-Pay Parties and Other Persons That Received Special Notice. Settling Defendants agree not to assert any claims or causes of action and to waive all claims or causes of action (including but not limited to claims or causes of action under Sections 107(a) and 113 of CERCLA) that they may have for response costs relating to the Site against any person that has entered or in the future enters into a final settlement based on limited ability to pay with EPA with respect to the Site. Except as to total costs of implementing the Remedial Action in the ROD, or any amendments thereto, incurred by the United States or any other person in excess of $35,000,000 (Thirty-Five Million Dollars) (exclusive of EPA's oversight costs) from the Effective Date until issuance of the Certificate of Completion of the Remedial Action, Settling Defendants agree not to assert any claims or causes of action and to waive all claims or causes of action (including but not limited to claims or causes of action under Sections 107(a) and 113 of CERCLA) that they may have for response costs relating to the Site against any person that has entered or in the future enters into a CERCLA Section 122(g) de minimis settlement with EPA with respect to the Site. For a period of 30 months from the Effective Date of this Consent Decree, Settling Defendants agree not to assert any claims or causes of action and to waive all claims and causes of action (including but not limited to claims or causes of action under Sections 107(a) and 113 of CERCLA) that they may have for response actions relating to the Site against any person not a party to this Consent Decree that received notice under CERCLA Section 122(e)(1), 42 U.S.C § 9622(e)(1), relating to the Cooper Drum Company Superfund Site. These waivers shall not apply with respect to any defense, claim, or cause of action that a Settling

Defendant may have against any person if such person asserts a claim or cause of action relating to the Site against such Settling Defendant.

XXIII. EFFECT OF SETTLEMENT; CONTRIBUTION PROTECTION

97. Except as provided in Paragraph 96 (Claims against De Minimis Parties, Ability to Pay Parties, and Persons That Received Special Notice), nothing in this Consent Decree shall be construed to create any rights in, or grant any cause of action to, any person not a Party to this Consent Decree. Except as provided in Paragraph 96 (Claims against De Minimis Parties, Ability to Pay Parties, and Persons That Received Special Notice), each of the Parties expressly reserves any and all rights (including, but not limited to, pursuant to Section 113(f)(2)-(3) of CERCLA, 42 U.S.C. § 9613(f)(2)-(3), defenses, claims, demands, and causes of action that each Party may have with respect to any matter, transaction, or occurrence relating in any way to the Site against any person not a Party hereto. Nothing in this Consent Decree diminishes the right of the United States, pursuant to Section 113(f)(2) and (3) of CERCLA, 42 U.S.C. § 9613(f)(2)-(3), to pursue any such persons to obtain additional response costs or response action and to enter into settlements that give rise to contribution protection pursuant to Section 113(f)(2).

98. The Parties agree, and by entering this Consent Decree this Court finds, that this Consent Decree constitutes a judicially approved settlement for purposes of Section 113(f)(2) of CERCLA, 42 U.S.C § 9613(f)(2), and that each Settling Defendant is entitled, as of the Effective Date, to protection from contribution actions or claims as provided by Section 113(f)(2) of CERCLA, or as may be otherwise provided by law, for “matters addressed” in this Consent Decree. The “matters addressed” in this Consent Decree are all response actions taken or to be taken and all response costs incurred or to be incurred, at or in connection with the Site, not to include response actions to be taken and response costs to be incurred in connection with the remediation of aquifers underlying the Gaspur

Aquifer, including the Exposition Aquifer, by the United States or DTSC or any other person; provided, however, that if the United States or DTSC exercises rights under the reservations in Section XXI (Covenants by Plaintiffs) other than Paragraphs 89.a (claims for failure to meet a requirement of the Consent Decree), 89.g (criminal liability), or 89.h (violations of federal law during or after implementation of the Work), the "matters addressed" in this Consent Decree will no longer include those response costs or response actions.

99. Each Settling Defendant shall, with respect to any suit or claim brought by it for matters related to this Consent Decree, notify the United States and DTSC in writing no later than 60 days prior to the initiation of such suit or claim.

100. Each Settling Defendant shall, with respect to any suit or claim brought against it for matters related to this Consent Decree, notify in writing the United States and DTSC within ten days after service of the complaint on such Settling Defendant. In addition, each Settling Defendant shall notify the United States and DTSC within ten days after service or receipt of any Motion for Summary Judgment and within ten days after receipt of any order from a court setting a case for trial.

101. Res Judicata and Other Defenses. (a) In any subsequent administrative or judicial proceeding initiated by the United States or DTSC for injunctive relief, recovery of response costs, or other relief relating to the Site, Settling Defendants shall not assert, and may not maintain, any defense or claim based upon the principles of waiver, res judicata, collateral estoppel, issue preclusion, claim-splitting, or other defenses based upon any contention that the claims raised by the United States or DTSC in the subsequent proceeding were or should have been brought in the instant case; provided, however, that nothing in this Paragraph affects the enforceability of the covenants not to sue set forth in Section XXI (Covenants by Plaintiffs); (b) In any subsequent administrative or

judicial proceeding initiated by the United States or DTSC for injunctive relief, recovery of response costs, or other relief relating to aquifers underlying the Gaspur Aquifer, including the Exposition Aquifer, Settling Defendants shall not assert, and may not maintain, any defense based on the contention that such claims should have been brought in the instant case and/or are res judicata or estopped by termination of the Order as provided in Paragraph 121 of this Consent Decree.

XXIV. ACCESS TO INFORMATION

102. Settling Defendants shall provide to EPA and DTSC, upon request, copies of all records, reports, documents and other information (including records, reports, documents, and other information in electronic form) (hereinafter referred to as "Records") within their possession or control or that of their contractors or agents relating to activities at the Site or to the implementation of this Consent Decree, including, but not limited to, sampling, analysis, chain of custody records, manifests, trucking logs, receipts, reports, sample traffic routing, correspondence, or other documents or information related to the Work. Settling Defendants shall also make available to EPA, for purposes of investigation, information gathering, or testimony related to the Site, their employees, agents, or representatives with knowledge of relevant facts concerning the performance of the Work.

103. Business Confidential and Privileged Documents.

a. Settling Defendants may assert business confidentiality claims covering part or all of the Records submitted to Plaintiffs under this Consent Decree to the extent permitted by and in accordance with Section 104(e)(7) of CERCLA, 42 U.S.C. § 9604(e)(7), and 40 C.F.R. § 2.203(b). Records determined to be confidential by EPA will be afforded the protection specified in 40 C.F.R. Part 2, Subpart B. If no claim of confidentiality accompanies Records when they are submitted to EPA or DTSC, or if EPA has notified Settling Defendants that the Records are not confidential under the standards of Section 104(e)(7) of CERCLA or 40 C.F.R. Part 2, Subpart

B, the public may be given access to such Records without further notice to Settling Defendants.

b. Settling Defendants may assert that certain Records are privileged under the attorney-client privilege or any other privilege recognized by federal law. If Settling Defendants assert such a privilege in lieu of providing Records, they shall provide Plaintiffs with the following: (1) the title of the Record; (2) the date of the Record; (3) the name, title, affiliation (e.g., company or firm), and address of the author of the Record; (4) the name and title of each addressee and recipient; (5) a description of the contents of the Record; and (6) the privilege asserted by Settling Defendants. If a claim of privilege applies only to a portion of a Record, the Record shall be provided to the United States and DTSC in redacted form to mask the privileged portion only. Settling Defendants shall retain all Records that they claim to be privileged until the United States, after reasonable opportunity for review and comment by DTSC, has had a reasonable opportunity to dispute the privilege claim and any such dispute has been resolved in the Settling Defendants' favor.

c. No Records created or generated pursuant to the requirements of this Consent Decree shall be withheld from the United States or DTSC on the grounds that they are privileged or confidential.

104. No claim of confidentiality or privilege shall be made with respect to any data associated with performance of the Work, including, but not limited to, all sampling, analytical, monitoring, hydrogeologic, scientific, chemical, or engineering data from the Site.

XXV. RETENTION OF RECORDS

105. Until ten years after Settling Defendants' receipt of EPA's notification pursuant to Paragraph 50(b) (Completion of the Work), each Settling Defendant shall preserve and retain all non-identical copies of Records (including Records in

electronic form) now in its possession or control or that come into its possession or control that relate in any manner to its liability under CERCLA with respect to the Site, provided, however, that Settling Defendants who are potentially liable as owners or operators of the Site must retain, in addition, all Records that relate to the liability of any other person under CERCLA with respect to the Site. Performing Settling Defendants must also retain, and instruct their contractors and agents to preserve, for the same period of time specified above, all non-identical copies of the last draft or final version of any Records (including Records in electronic form) now in their possession or control or which come into their possession or control that relate in any manner to the performance of the Work, provided, however, that Performing Settling Defendants (and their contractors and agents) must retain, in addition, copies of all data generated during the performance of the Work and not contained in the aforementioned Records required to be retained. Each of the above record retention requirements shall apply regardless of any corporate retention policy to the contrary.

106. At the conclusion of this record retention period, Settling Defendants shall notify the United States and DTSC at least 30 days prior to the destruction of any such Records, and, upon request by the United States and DTSC, Settling Defendants shall promptly deliver any such Records to EPA or, as appropriate, to DTSC. Settling Defendants may assert that certain Records are privileged under the attorney-client privilege or any other privilege recognized by federal law. If Settling Defendants assert such a privilege, they shall provide the Plaintiffs with the following: (a) the title of the Record; (b) the date of the Record; (c) the name, title, affiliation (e.g., company or firm), and address of the author of the Record; (d) the name and title of each addressee and recipient; (e) a description of the subject of the Record; and (f) the privilege asserted by Settling Defendants. If a claim of privilege applies only to a portion of a Record, the Record shall be provided to the United States and DTSC in redacted form to mask the privileged

portion only. Settling Defendants shall retain all Records that they claim to be privileged until the United States has had a reasonable opportunity to dispute the privilege claim and any such dispute has been resolved in Settling Defendants' favor. However, no Records created or generated pursuant to the requirements of this Consent Decree shall be withheld on the grounds that they are privileged or confidential.

107. Each Settling Defendant certifies individually that, to the best of its knowledge and belief, after thorough inquiry, it has not altered, mutilated, discarded, destroyed, or otherwise disposed of any Records (other than identical copies) relating to its potential liability regarding the Site since the earlier of notification of potential liability by the United States or DTSC or the filing of suit against it regarding the Site and that it has fully complied with any and all EPA or DTSC requests for information regarding the Site pursuant to Section 104(e) and 122(e) of CERCLA, 42 U.S.C. §§ 9604(e) and 9622(e), and Section 3007 of RCRA, 42 U.S.C. § 6927, or §§ 25185 and 25358.1 of the Health and Safety Code.

108. The Ability-to-Pay Settling Defendants hereby certify that, to the best of their knowledge and belief, after thorough inquiry, they have submitted to EPA financial information that at the time of submittal fairly, accurately, and materially set forth their financial circumstances. The Ability-to-Pay Settling Defendants also certify that those circumstances have either not materially changed between the time the financial information was submitted to EPA and the time of Consent Decree execution or, if circumstances have materially changed, their financial position is now worse than it was at the time the financial documents were submitted.

XXVI. NOTICES AND SUBMISSIONS

109. Whenever, under the terms of this Consent Decree, written notice is required to be given or a report or other document is required to be sent by one Party to another, it shall be directed to the individuals at the addresses specified

below, unless those individuals or their successors give notice of a change to the other Parties in writing. All notices and submissions shall be considered effective upon receipt, unless otherwise provided. Written notice as specified herein shall constitute complete satisfaction of any written notice requirement of the Consent Decree with respect to the United States, EPA, and the Settling Defendants, respectively. Notices required to be sent to EPA, and not to the United States, under the terms of this Consent Decree, should not be sent to the U.S. Department of Justice:

As to the United States:

Chief, Environmental Enforcement Section
Environment and Natural Resources Division
U.S. Department of Justice
P.O. Box 7611
Washington, D.C. 20044-7611
Re: DJ # 90-11-2-09084

and

Superfund Division Director
United States Environmental Protection Agency
Region IX
75 Hawthorne St.
San Francisco, CA 94105
Re: Cooper Drum Superfund Site

As to EPA:

Karen Jurist
EPA Project Coordinator
United States Environmental Protection Agency
Region IX
75 Hawthorne St.
San Francisco, CA 94105
Re: Cooper Drum Superfund Site

As to the Regional Financial Management Officer:

David Wood, Chief, Cost Accounting
United States Environmental Protection Agency
Region IX
75 Hawthorne St.
San Francisco, CA 94105
Re: Cooper Drum Superfund Site

As to the Performing Settling Defendants:

Kenny Ogilvie
CDCPG Project Coordinator
EHS Support LLC
110 Kentzel Road
Pittsburgh, PA 15237
412-855-3047 (Direct)
kenny.ogilvie@ehs-support.com

Daniel E. Vineyard
CDCPG Common Counsel
Jackson Walker L.L.P.
1401 McKinney, Suite 1900
Houston, TX 77010
713-752-4277
dvineyard@jw.com

As to DTSC:

Lori Parnass
Hazardous Substances Scientist
Brownfields and Environmental Reuse Program
Department of Toxic Substances Control
9211 Oak Dale Avenue
Chatsworth, CA 91311
Phone: (818) 717-6597
Lori.Parnass@dtsc.ca.gov

As to Contributing Settling Defendants, Ability-To-Pay Settling Defendants and De Minimis Settling Defendants: See names and addresses on Appendices F, G and H to this Consent Decree

XXVII. RETENTION OF JURISDICTION

110. This Court retains jurisdiction over both the subject matter of this Consent Decree and Settling Defendants for the duration of the performance of the terms and provisions of this Consent Decree for the purpose of enabling any of the Parties to apply to the Court at any time for such further order, direction, and relief as may be necessary or appropriate for the construction or modification of this Consent Decree, or to effectuate or enforce compliance with its terms, or to resolve disputes in accordance with Section XIX (Dispute Resolution).

XXVIII. APPENDICES

111. The following appendices are incorporated into this Consent Decree:

"Appendix A" is the ROD.

"Appendix B" is the description of the Site.

"Appendix C" is the SOW.

"Appendix D" is collectively the two Remedial Design Reports completed by EPA.

"Appendix E" is the list of all Settling Defendants.

"Appendix F" is the list of the Ability-to-Pay Settling Defendants and the amounts they are to pay to the United States pursuant to this Consent Decree.

"Appendix G" is the list of De Minimis Settling Defendants and the amounts they are to pay to the United States pursuant to this Consent Decree.

"Appendix H" is the list of Contributing Settling Defendants and the amounts they are to pay to the Performing Settling Defendants pursuant to this Consent Decree.

"Appendix I" is the list of Performing Settling Defendants.

"Appendix J" is the form of Performance Guarantee selected by the Performing Settling Defendants and approved by the United States.

XXIX. COMMUNITY INVOLVEMENT

112. If requested by EPA, Performing Settling Defendants shall participate in community involvement activities pursuant to the Community Involvement Plan developed by EPA. Performing Settling Defendants shall reasonably cooperate with EPA in providing information regarding the Work to the public. As requested by EPA, Performing Settling Defendants shall participate in the preparation of such information for dissemination to the public and in public meetings that may be held or sponsored by EPA to explain activities at or relating to the Site.

XXX. MODIFICATION

113. Except as provided in Paragraph 13 (Modification of SOW or Related Work Plans), material modifications to this Consent Decree, including the SOW, shall be in writing, signed by the United States, DTSC and Settling Defendants, and shall be effective upon approval by the Court. Except as provided in Paragraph 13, non-material modifications to this Consent Decree, including the SOW, shall be in writing and shall be effective when signed by duly authorized representatives of the United States, and Settling Defendants. All modifications of the Consent Decree, other than the SOW, shall also be signed by DTSC. A modification to the SOW shall be considered material if it implements a Consent Decree ROD Amendment that fundamentally alters the basic features of the selected remedy within the meaning of 40 C.F.R. 300.435(c)(2)(ii). Before providing its approval to any modification to the SOW, the United States will provide DTSC with a reasonable opportunity to review and comment on the proposed modification.

114. Any modification that does not affect the obligations of or the protections afforded to Ability-to-Pay Settling Defendants, Contributing Settling Defendants or De Minimis Settling Defendants may be executed without the

signatures of Ability-to-Pay Settling Defendants, Contributing Settling Defendants or De Minimis Settling Defendants.

115. Nothing in this Decree shall be deemed to alter the Court's power to enforce, supervise or approve modifications to this Consent Decree.

XXXI. LODGING AND OPPORTUNITY FOR PUBLIC COMMENT

116. This Consent Decree shall be lodged with the Court for a period of not less than 30 days for public notice and comment in accordance with Section 122(d)(2) of CERCLA, 42 U.S.C. § 9622(d)(2), and 28 C.F.R. § 50.7. The United States and DTSC reserve the right to withdraw or withhold their consent if the comments regarding the Consent Decree disclose facts or considerations which indicate that the Consent Decree is inappropriate, improper, or inadequate. Settling Defendants consent to the entry of this Consent Decree without further notice.

117. If for any reason the Court should decline to approve this Consent Decree in the form presented, this agreement is voidable at the sole discretion of any Party and the terms of the agreement may not be used as evidence in any litigation between the Parties.

XXXII. SIGNATORIES/SERVICE

118. Each undersigned representative of a Settling Defendant and DTSC to this Consent Decree and the Assistant Attorney General for the Environment and Natural Resources Division of the Department of Justice certifies that he or she is fully authorized to enter into the terms and conditions of this Consent Decree and to execute and legally bind such Party to this document.

119. Each Settling Defendant agrees not to oppose entry of this Consent Decree by this Court or to challenge any provision of this Consent Decree unless the United States or DTSC has notified Settling Defendants in writing that it no longer supports entry of the Consent Decree.

120. Each Settling Defendant shall identify, on the attached signature page, the name, address and telephone number of an agent who is authorized to accept service of process by mail on behalf of that Party with respect to all matters arising under or relating to this Consent Decree. Settling Defendants agree to accept service in that manner and to waive the formal service requirements set forth in Rule 4 of the Federal Rules of Civil Procedure and any applicable local rules of this Court, including, but not limited to, service of a summons. Settling Defendants need not file an answer to the complaint in this action unless or until the court expressly declines to enter this Consent Decree.

XXXIII. TERMINATION OF ORDER

121. Upon entry of this Consent Decree, Unilateral Order 2009-07 is terminated as to such Settling Defendants.

XXXIV. FINAL JUDGMENT

122. This Consent Decree and its appendices constitute the final, complete, and exclusive agreement and understanding among the Parties regarding the settlement embodied in the Consent Decree. The Parties acknowledge that there are no representations, agreements or understandings relating to the settlement other than those expressly contained in this Consent Decree.

// //
// //
// //
// //
// //
// //
// //
// //
// //
// //

123. Upon approval and entry of this Consent Decree by the Court, this Consent Decree shall constitute a final judgment between and among the United States, DTSC and Settling Defendants. The Court enters this judgment as a final judgment under Federal Rules of Civil Procedure 54 and 58.

SO ORDERED THIS 20TH DAY OF April, 2016.

United States District Judge

THE UNDERSIGNED PARTIES enter into this Consent Decree in the matter of United States, et al. v. AC Products, Inc., et al.:

FOR PLAINTIFF UNITED STATES OF AMERICA

DATE: Nov 24, 2015

CHERYL ANN LUKE
Trial Attorney
Environmental Enforcement Section
Environmental & Natural Resources Division
United States Department of Justice
P.O. Box 7611
Washington, D.C. 20044-7611
Telephone: (202) 514-5466
Fax: (202) 616-2427
Email: cheryl.luke@usdoj.gov

THE UNDERSIGNED PARTIES enter into this Consent Decree in the matter of United States, et al. v. AC Products, Inc., et al.:

FOR PLAINTIFF UNITED STATES OF AMERICA

DATE: 12/1/15

ENRIQUE MANZANILLA
DIRECTOR, SUPERFUND DIVISION
(US EPA Region 9)

THE UNDERSIGNED PARTIES enter into this Consent Decree in the matter of United States, et al. v. AC Products, Inc., et al.:

FOR PLAINTIFF STATE OF CALIFORNIA DEPARTMENT OF TOXIC SUBSTANCES CONTROL

DATE: 8/14/2015

Sayareh Amirebrahimi
Branch Chief, Brownsfields and
Environmental Restoration Program

THE UNDERSIGNED PARTIES enter into this Consent Decree in the matter of United States, et al. v. AC Products, Inc., et al.:

FOR SETTLING DEFENDANT **AC Products, Inc.**

DATE: 8/18/15

Name (print): Robert T Traub

Title: Vice President

Agent Authorized to Accept Service on Behalf of Above-signed Party:

Quaker Chem. Corp. -
CSC-Lawyers Incorporating Service
2710 Gateway Oaks Drive, Suite 150N
Sacramento, CA 95833

THE UNDERSIGNED PARTIES enter into this Consent Decree in the matter of United States, et al. v. AC Products, Inc., et al.:

FOR SETTLING DEFENDANT **A.G. Layne, Inc., a California corporation, and its officers, directors, shareholders and corporate successors**

DATE: 8/13/2015

Name (print): Michael D. Lee

Title: President

Agent Authorized to Accept Service on Behalf of Above-signed Party:

Name: Michael D. Lee

Address: 4578 Brazil Street

Los Angeles, CA 90039

THE UNDERSIGNED PARTIES enter into this Consent Decree in the matter of United States, et al. v. AC Products, Inc., et al.:

FOR SETTLING DEFENDANT **Alpha Corporation of Tennessee Inc.**

DATE: 9-17-2015

Frank Sizemore

Name (print): Frank Sizemore

Title: Director of Regulatory Affairs

Agent Authorized to Accept Service on Behalf of Above-signed Party:

CT Corporation System
818 W. Seventh Street
Los Angeles, CA 90017

THE UNDERSIGNED PARTIES enter into this Consent Decree in the matter of United States, et al. v. AC Products, Inc., et al.:

FOR SETTLING DEFENDANT **Ashland Inc.**

DATE: 9/9/15

Name (print): RICHMOND L. WILLIAMS

Title: Chief Counsel Environmental Lit.

Agent Authorized to Accept Service on Behalf of Above-signed Party: CT Corporation System
818 West Seventh Street
Los Angeles, CA 90017

THE UNDERSIGNED PARTIES enter into this Consent Decree in the matter of United States, et al. v. AC Products, Inc., et al.:

FOR SETTLING DEFENDANT **Atlantic Richfield Company**

DATE: Aug 25, 2015

Lisa A Smith

Name (print): LISA A SMITH

Title: VICE PRESIDENT

Agent Authorized to Accept Service on Behalf of Above-signed Party:

CSC-Lawyers Incorporating Service
2710 Gateway Oaks Drive, Suite 150N
Sacramento, CA 95833

THE UNDERSIGNED PARTIES enter into this Consent Decree in the matter of United States, et al. v. AC Products, Inc., et al.:

FOR SETTLING DEFENDANT **Baker Petrolite LLC**

DATE: 21 October 2015

Name (print): DINA C. KUYKENDALL

Title: DIRECTOR OF ENVIRONMENTAL AFFAIRS

Agent Authorized to Accept Service on Behalf of Above-signed Party:

CT Corporation System
818 West Seventh Street
Los Angeles, CA 90017

NCA

THE UNDERSIGNED PARTIES enter into this Consent Decree in the matter of United States, et al. v. AC Products, Inc., et al.:

FOR SETTLING DEFENDANT **Cargill, Incorporated**

DATE: Aug 26, 2015

Anne Momine

Name (print): Anne Momine

Title: Corporate Environmental Lead CEHS, Cargill Inc.

Agent Authorized to Accept Service on Behalf of Above-signed Party:

CT Corporation System
818 West Seventh Street
Los Angeles, CA 90017

THE UNDERSIGNED PARTIES enter into this Consent Decree in the matter of United States, et al. v. AC Products, Inc., et al.:

FOR SETTLING DEFENDANT **Castrol Industrial North America Inc.**

DATE: Aug 25, 2015

Name (print): LISA A SMITH

Title: VICE PRESIDENT

Agent Authorized to Accept Service on Behalf of Above-signed Party:

CSC-Lawyers Incorporating Service
2710 Gateway Oaks Drive, Suite 150N
Sacramento, CA 95833

THE UNDERSIGNED PARTIES enter into this Consent Decree in the matter of United States, et al. v. AC Products, Inc., et al.:

FOR SETTLING DEFENDANT **Chemical Waste Management, Inc.**

DATE: 9/15/15

Name (print): Steven Richtel

Title: Area Director

Agent Authorized to Accept Service on Behalf of Above-signed Party:

CT Corporation System
818 West Seventh Street
Los Angeles, CA 90017

THE UNDERSIGNED PARTIES enter into this Consent Decree in the matter of United States, et al. v. AC Products, Inc., et al.:

FOR SETTLING DEFENDANT **Chevron U.S.A. Inc.**

DATE: 9/28/2015

Name (print): Michael W. Woody

Title: Assistant Secretary

Agent Authorized to Accept Service on Behalf of Above-signed Party:

The Prentice-Hall Corporation System, Inc.
2710 Gateway Oaks Drive, Suite 150N
Sacramento, CA 95833

THE UNDERSIGNED PARTIES enter into this Consent Decree in the matter of United States, et al. v. AC Products, Inc., et al.:

FOR SETTLING DEFENDANT **Coral Chemical Company**

DATE: 31 AUG 2015

Name (print): JOHN E. SCHUERMAN

Title: PRESIDENT/CEO, CORAL

Agent Authorized to Accept Service on Behalf of Above-signed Party:

CT Corporation System
818 West Seventh Street
Los Angeles, CA 90017

THE UNDERSIGNED PARTIES enter into this Consent Decree in the matter of United States, et al. v. AC Products, Inc., et al.:

FOR SETTLING DEFENDANT **Houghton International, Inc., as successor to D.A. Stuart Company**

DATE: _____

_____

Name (print): Peter M. Macaluso

Title: SVP

Agent Authorized to Accept Service on Behalf of Above-signed Party:

Name: _____

Address: _____

_____

_____

THE UNDERSIGNED PARTIES enter into this Consent Decree in the matter of United States, et al. v. AC Products, Inc., et al.:

FOR SETTLING DEFENDANT **Dunn-Edwards Corporation**

DATE: 9-10-15

Name (print): Robert Hill

Title: EVP/CFO

Agent Authorized to Accept Service on Behalf of Above-signed Party:

Nicholas W. van Aelstyn
Beveridge & Diamond, PC
456 Montgomery Street, Suite 1800
San Francisco, CA 94104-1251

THE UNDERSIGNED PARTIES enter into this Consent Decree in the matter of United States, et al. v. AC Products, Inc., et al.:

FOR SETTLING DEFENDANT **ExxonMobil Oil Corporation**

DATE: 10/21/2015

Name (print): ANDREW HANWORTH

Title: US PROJECT EXECUTION MANAGER

Agent Authorized to Accept Service on Behalf of Above-signed Party:

CSC-Lawyers Incorporating Service
2710 Gateway Oaks Drive, Suite 150N
Sacramento, CA 95833

THE UNDERSIGNED PARTIES enter into this Consent Decree in the matter of United States, et al. v. AC Products, Inc., et al.:

FOR SETTLING DEFENDANT **Gallade Chemical, Inc. (formerly known as and doing business as Orange County Chemical)**

DATE: 10/13/15

Richard A Gallade

Name (print): RICHARD A. GALLADE

Title: PRESIDENT

Agent Authorized to Accept Service on Behalf of Above-signed Party:

Richard A. Gallade
Gallade Chemical, Inc.
1230 E. St. Gertrude Place
Santa Ana, CA 92707

THE UNDERSIGNED PARTIES enter into this Consent Decree in the matter of United States, et al. v. AC Products, Inc., et al.:

FOR SETTLING DEFENDANT **Hasco Oil Company, Inc.**

DATE: 10-15-2015

Renee L Bjorklund

Name (print): Renee Bjorklund

Title: President

Agent Authorized to Accept Service on Behalf of Above-signed Party:

Steven Fingal
2301 Dupont Street, Suite 350
Irvine, CA 92612

THE UNDERSIGNED PARTIES enter into this Consent Decree in the matter of United States, et al. v. AC Products, Inc., et al.:

FOR SETTLING DEFENDANT **Houghton International, Inc.**

DATE: 11.10.15

Name (print): PETER M. MARCHUSO

Title: SVP

Agent Authorized to Accept Service on Behalf of Above-signed Party:

National Registered Agents, Inc.
818 W. Seventh Street
Los Angeles, CA 90017

THE UNDERSIGNED PARTIES enter into this Consent Decree in the matter of United States, et al. v. AC Products, Inc., et al.:

FOR SETTLING DEFENDANT **J.H. Mitchell & Sons Distributors, Inc., a California Corporation, and its officers, directors, shareholders and corporate successors**

DATE: August 21, 2015

Name (print) Sherman Mitchell:

Title: Sec. Treas.

Agent Authorized to Accept Service on Behalf of Above-signed Party:

Sherman Mitchell
14515 Joanbridge Street
Baldwin Park, CA 91706

THE UNDERSIGNED PARTIES enter into this Consent Decree in the matter of United States, et al. v. AC Products, Inc., et al.:

FOR SETTLING DEFENDANT **Lockheed Martin Corporation, including all officers, directors, shareholders, and corporate successors**

DATE: 11/23/15

Carol B. Cala
VP, Energy, Environment, Safety & Health
Enterprise Business Services
Lockheed Martin Corporation

Agent Authorized to Accept Service on Behalf of Above-signed Party:

CSC-Lawyers Incorporating Service
2710 Gateway Oaks Drive, Suite 150N
Sacramento, CA 95833

THE UNDERSIGNED PARTIES enter into this Consent Decree in the matter of United States, et al. v. AC Products, Inc., et al.:

FOR SETTLING DEFENDANT **Lonza Inc.**

DATE: 9/10/15

Name (print): Dan Bennenitz

Title: Corporate Head, EHS

Agent Authorized to Accept Service on Behalf of Above-signed Party:

National Corporate Research
523 W. 6th Street, Suite 544
Los Angeles, CA 90014

THE UNDERSIGNED PARTIES enter into this Consent Decree in the matter of United States, et al. v. AC Products, Inc., et al.:

FOR SETTLING DEFENDANT **Lubricating Specialties Company**

DATE: 31 August 2015

Name (print): SYDNEY THWAITES

Title: PRESIDENT & CEO

Agent Authorized to Accept Service on Behalf of Above-signed Party:

Stephen Milam
8014 Paramount Blvd.
Pico Rivera, CA 90660-4888

THE UNDERSIGNED PARTIES enter into this Consent Decree in the matter of United States, et al. v. AC Products, Inc., et al.:

FOR SETTLING DEFENDANT **Mathisen Oil Co. Inc. a California corporation, and its officers, directors, shareholders and corporate successors**

DATE: 8-24-2015 James Mathisen

Name (print): JAMES MATHISEN

Title: PRESIDENT

Agent Authorized to Accept Service on Behalf of Above-signed Party:

James Mathisen
10911 Jasmine street
Fontana, ca 92337

THE UNDERSIGNED PARTIES enter into this Consent Decree in the matter of United States, et al. v. AC Products, Inc., et al.:

FOR SETTLING DEFENDANT **Pennzoil-Quaker State Company (for itself and for Penreco)**

DATE: 8th September 2015

Name (print): JONATHAN ELTON

Title: GENERAL MANAGER

Agent Authorized to Accept Service on Behalf of Above-signed Party:

CT Corporation System
818 West Seventh Street
Los Angeles, CA 91101

THE UNDERSIGNED PARTIES enter into this Consent Decree in the matter of United States, et al. v. AC Products, Inc., et al.:

FOR SETTLING DEFENDANT **PolyOne Corporation**

DATE: 14 SEP 2015

Name (print): M. John Midea, Jr.

Title: Senior Vice President, Global Operations and Process Improvement

RKJ 9-14-15

Agent Authorized to Accept Service on Behalf of Above-signed Party:

CT Corporation System
818 West Seventh St., Ste 930
Los Angeles, CA 90017

THE UNDERSIGNED PARTIES enter into this Consent Decree in the matter of United States, et al. v. AC Products, Inc., et al.:

FOR SETTLING DEFENDANT **PPG Industries, Inc.**

DATE: 9/18/15

Name (print): Jane Valenta

Title: V.P. EHS

Agent Authorized to Accept Service on Behalf of Above-signed Party:

The Prentice-Hall Corporation System, Inc.
2710 Gateway Oaks Drive, Suite 150N
Sacramento, CA 95833

THE UNDERSIGNED PARTIES enter into this Consent Decree in the matter of United States, et al. v. AC Products, Inc., et al.:

FOR SETTLING DEFENDANT **PTM&W Industries Inc.**

DATE: Sept. 14, 2015

Name (print): CHARLES E. OWEN

Title: PRESIDENT

Agent Authorized to Accept Service on Behalf of Above-signed Party:	Charles E. Owen 10640 S. Painter Avenue Santa Fe Springs, CA 90670

THE UNDERSIGNED PARTIES enter into this Consent Decree in the matter of United States, et al. v. AC Products, Inc., et al.:

FOR SETTLING DEFENDANT **Quaker Chemical Corporation**

DATE: 8/18/15

Name (print): Robert T. Traub

Title: General Counsel

Agent Authorized to Accept Service on Behalf of Above-signed Party:

CSC-Lawyers Incorporating Service
2710 Gateway Oaks Drive, Suite 150N
Sacramento, CA 95833

THE UNDERSIGNED PARTIES enter into this Consent Decree in the matter of United States, et al. v. AC Products, Inc., et al.:

FOR SETTLING DEFENDANT **Rathon Corp., including all officers, directors and corporate successors**

DATE: 11-2-2015

Name (print): E. Lee Reichert

Title: Secretary

Agent Authorized to Accept Service on Behalf of Above-signed Party:

Name: Incorporating Services, Ltd.

Address: 720 14th Street

Sacramento, California 95814

THE UNDERSIGNED PARTIES enter into this Consent Decree in the matter of United States, et al. v. AC Products, Inc., et al.:

FOR SETTLING DEFENDANT **Shell Chemical LP**

DATE: 8 SEPT 2015

Name (print): NATHAN JEPPSON

Title: PRESIDENT

Agent Authorized to Accept Service on Behalf of Above-signed Party:

CT Corporation System
818 West Seventh Street
Los Angeles, CA 90017

THE UNDERSIGNED PARTIES enter into this Consent Decree in the matter of United States, et al. v. AC Products, Inc., et al.:

FOR SETTLING DEFENDANT **Shell Oil Company**

DATE: 8th September 2015

Name (print): Jonathan Elton

Title: General Manager

Agent Authorized to Accept Service on Behalf of Above-signed Party:

CT Corporation System
818 West Seventh Street
Los Angeles, CA 90017

THE UNDERSIGNED PARTIES enter into this Consent Decree in the matter of United States, et al. v. AC Products, Inc., et al.:

FOR SETTLING DEFENDANT **SOCO West, Inc.**

DATE: 9/30/15

Name (print): RAJ MEHTA

Title: Pres

Agent Authorized to Accept Service on Behalf of Above-signed Party:

Thomas C. Sanford
170 S. Euclid Avenue
Pasadena, CA 91101

THE UNDERSIGNED PARTIES enter into this Consent Decree in the matter of United States, et al. v. AC Products, Inc., et al.:

FOR SETTLING DEFENDANT **Southern California Edison**

DATE: 11/19/15

Name (print): DONALD HEAL

Title: DIRECTOR, CORP. ENVIRONMENTAL SERVICES

Agent Authorized to Accept Service on Behalf of Above-signed Party:

Cristina E. Limon
2244 Walnut Grove Avenue
Rosemead, CA 91770

THE UNDERSIGNED PARTIES enter into this Consent Decree in the matter of United States, et al. v. AC Products, Inc., et al.:

FOR SETTLING DEFENDANT **Southern Counties Oil Co., a California Corporation, and Southern Counties Oil Co., a California Limited Partnership**

DATE: 9/1/15

Name: Robert W. Bollar

Title: Corporate Secretary

Agent Authorized to Accept Service on Behalf of Above-signed Party:

Robert Bollar
SC Fuels Legal Department
1800 West Katella Avenue, Suite 400
Orange, CA 92867

THE UNDERSIGNED PARTIES enter into this Consent Decree in the matter of United States, et al. v. AC Products, Inc., et al.:

FOR SETTLING DEFENDANT **Sta-Lube LLC, formerly Sta-Lube, Inc. (originally and incorrectly identified in the UAO as CRC Industries, Inc.)**

DATE: 14 August 2015

Scott Grey

Name (print): Scott Grey

Title: CEO

Agent Authorized to Accept Service on Behalf of Above-signed Party:

Name: Corporation Service Company

Address:
d/b/a CSC-Lawyers Incorporating Service
2710 Gateway Oaks Drive
Suite 150N
Sacramento, CA 95833-3505

THE UNDERSIGNED PARTIES enter into this Consent Decree in the matter of United States, et al. v. AC Products, Inc., et al.:

FOR SETTLING DEFENDANT **Stuarts' Petroleum, a California Corporation, and its officers, directors, shareholders and corporate successors**

DATE: 8-20-15

Name (print): John A Stuart

Title: President

Agent Authorized to Accept Service on Behalf of Above-signed Party:

John A. Stuart
11 E 4th Street
Bakersfield, CA 93307

THE UNDERSIGNED PARTIES enter into this Consent Decree in the matter of United States, et al. v. AC Products, Inc., et al.:

FOR SETTLING DEFENDANT **Texaco Downstream Properties Inc.**

DATE: 28 Sept 2015

Name (print): Frank G. Soler

Title: Vice President and Secretary

Agent Authorized to Accept Service on Behalf of Above-signed Party:

The Prentice-Hall Corporation System, Inc.
2710 Gateway Oaks Drive, Suite 150N
Sacramento, CA 95833

THE UNDERSIGNED PARTIES enter into this Consent Decree in the matter of United States, et al. v. AC Products, Inc., et al.:

FOR SETTLING DEFENDANT **The Boeing Company**

DATE: 9/27/2015

Name (print): J. STEVEN ROGERS

Title: CHIEF COUNSEL, EHS
THE BOEING COMPANY

Agent Authorized to Accept Service on Behalf of Above-signed Party:	CSC-Lawyers Incorporating Service 2710 Gateway Oaks Drive, Suite 150N Sacramento, CA 95833

THE UNDERSIGNED PARTIES enter into this Consent Decree in the matter of United States, et al. v. AC Products, Inc., et al.:

FOR SETTLING DEFENDANT **The Valspar Corporation and its wholly owned subsidiary, Engineered Polymer Solutions, Inc.**

DATE: 8/28/2015

Name (print): Rolf Engh

Title: Executive Vice President, General Counsel and Secretary

Agent Authorized to Accept Service on Behalf of Above-signed Party:

CT Corporation System
818 W. Seventh Street
Los Angeles, CA 90017

THE UNDERSIGNED PARTIES enter into this Consent Decree in the matter of United States, et al. v. AC Products, Inc., et al.:

FOR SETTLING DEFENDANT **Union Oil Company of California**

DATE: 9/28/15

Name (print): Grace Nerona

Title: Assistant Secretary

Agent Authorized to Accept Service on Behalf of Above-signed Party:

The Prentice-Hall Corporation System, Inc.
2710 Gateway Oaks Drive, Suite 150N
Sacramento, CA 95833

THE UNDERSIGNED PARTIES enter into this Consent Decree in the matter of United States, et al. v. AC Products, Inc., et al.:

FOR SETTLING DEFENDANT **Univar USA Inc. on behalf of itself and Chemcentral Corp.**

DATE: 8/20/15

Name (print): MICHELLE ULICK ROSENTHAL

Title: OUTSIDE COUNSEL TO UNIVAR USA INC.

Agent Authorized to Accept Service on Behalf of Above-signed Party:

CSC-Lawyers Incorporating Service
2730 Gateway Oaks Drive, Suite 100
Sacramento, CA 95833

UNITED STATES DISTRICT COURT
CENTRAL DISTRICT OF CALIFORNIA
WESTERN DIVISION

UNITED STATES OF AMERICA, & STATE OF CALIFORNIA,	)	CIV. NO.:
Plaintiffs,	)	
v.	)	CONSENT DECREE
AC PRODUCTS, INC., et al.	)	
Defendants.	)	

Appendix A

Record of Decision

RECORD OF DECISION

COOPER DRUM COMPANY
CITY OF SOUTH GATE, CALIFORNIA

U.S. Environmental Protection Agency
Region 9
San Francisco, California

September 27, 2002

RECORD OF DECISION
COOPER DRUM COMPANY

Part I - DECLARATION

1.1 Site Name and Location 1
1.2 Statement of Basis and Purpose 1
1.3 Assessment of Site 1
1.4 Description of Selected Remedy 1
1.5 Statutory Determinations 3
1.6 ROD Data Certification Checklist 3
1.7 Authorizing Signature 4

Part II - DECISION SUMMARY

1.0 Site Name, Location and Description 5

2.0 Site History and Enforcement Activities 5
2.1 Site History 5
2.2 Previous Investigations and Enforcement Activities 6

3.0 Community Participation 9

4.0 Scope and Role of Operable Unit or Response Action 9

5.0 Site Characteristics 10
5.1 Conceptual Site Model 10
5.2 Overview of Cooper Drum 10
5.3 Surface and Subsurface Features 12
5.4 Sampling Strategy 12
5.5 Known and Suspected Sources of Contamination 13
5.6 Types of Contamination and Affected Media 13
5.7 Location of Contamination and Known Potential Routes of Migration 17
5.7.1 Soil Contamination 17
5.7.2 Groundwater Contamination 17

6.0 Current and Potential Future Site and Resource Uses 19

7.0 Summary of Site Risks 21
7.1 Summary of Human Health Risk Assessment 21
7.1.1 Identification of Contaminants of Concern 21
7.1.2 Exposure Assessment 21
7.1.3 Toxicity Assessment 22
7.1.4 Risk Characterization Assessment 23
7.1.5 Uncertainty Analysis 25
7.2 Summary of Ecological Risk Assessment 26

7.3 Risk Assessment Conclusion 26

8.0 Remedial Action Objectives 44

9.0 Description of Alternatives 45
9.1 Description of Soil Alternatives/Remedy Components 45
9.1.1 Soil Alternative 1 - No Action 45
9.1.2 Soil Alternative 2 - Dual Phase Extraction/GAC/Institutional Controls . 45
9.1.3 Soil Alternative 3 - Dual Phase Extraction/GAC/ Institutional Controls/Excavation 47
9.2 Description of Groundwater Alternatives/Remedy Components 47
9.2.1 Groundwater Alternative1 - No Action 47
9.2.2 Groundwater Alternative 2 - Extraction/GAC 48
9.2.3 Groundwater Alternative 4 - Extraction/GAC/In Situ Chemical Treatment-Reductive Dechlorination and Oxidation 49
9.2.4 Groundwater Alternative 6 - In-Well Air Stripping with Groundwater Circulation Wells 50
9.3 Common Elements and Distinguishing Features of Each Alternative 52

10.0 Comparative Analysis of Alternatives 53
10.1. Overall Protection of Human Health and the Environment 54
10.1.1 Soil Alternatives 54
10.1.2 Groundwater Alternatives 56
10.2 Compliance with ARARs 56
10.3 Long-Term Effectiveness 57
10.3.1 Soil Alternatives 57
10.3.2 Groundwater Alternatives 57
10.4 Reduction of Toxicity, Mobility, and Volume Through Treatment 58
10.4.1 Soil Alternatives 58
10.4.2 Groundwater Alternatives 58
10.5 Short-Term Effectiveness 59
10.5.1 Soil Alternatives 59
10.5.2 Groundwater Alternatives 59
10.6 Implementability 60
10.6.1 Soil Alternatives 60
10.6.2 Groundwater Alternatives 61
10.7 Cost 62
10.7.1 Soil Alternatives 62
10.7.2 Groundwater Alternatives 62
10.8 State Acceptance 62
10.9 Community Acceptance 63

11.0 Principal Threat Wastes 63

12.0 Selected Remedy 63
12.1 Summary of the Rationale for the Selected Remedy 64

12.2 Description of Selected Remedy 65
12.3 Summary of the Estimated Remedy Costs 68
12.4 Expected Outcome of the Selected Remedy 73

13.0 Statutory Determinations 76
13.1 Protection of the Human Health and the Environment 76
13.2 Compliance with Applicable or Relevant and Appropriate Requirements 76
13.3 Cost Effectiveness 85
13.4 Utilization of Permanent Solutions and Alternative Treatment Technologies to the Maximum Extent Practicable 86
13.5 Preference for Treatment as A Principal Element 88
13.6 Five-Year Review Requirements 88

14.0 Documentation of Significant Changes 88

PART III RESPONSIVENESS SUMMARY

1.0 Stakeholder Issues and EPA Responses 89

2.0 Technical and Legal Issues 89
2.1 Technical Issues 89
2.2 Legal Issues 89

LIST OF TABLES

Table 5-1 Types and Characteristics of Contaminants of Concern 15
Table 7-1a Summary of Contaminants of Concern and Medium-Specific Exposure Point Concentrations (Soil 0-2 feet) 27
Table 7-1b Summary of Contaminants of Concern and Medium-Specific Exposure Point Concentrations (Soil 0-12 feet) 28
Table 7-1c Summary of Contaminants of Concern and Medium-Specific Exposure Point Concentrations (Groundwater) 29
Table 7-1d Summary of Contaminants of Concern and Medium-Specific Exposure Point Concentrations (Indoor Air) 30
Table 7-2 Cancer Toxicity Data Summary 31
Table 7-3 Non-Cancer Toxicity Data Summary 33
Table 7-4a Risk Characterization Summary - Carcinogens (Worker) 35
Table 7-4b Risk Characterization Summary - Carcinogens (Resident) 37
Table 7-5a Risk Characterization Summary - Non-Carcinogens (Worker) 40
Table 7-5b Risk Characterization Summary - Non-Carcinogens (Resident) 41
Table 9-1 Summary of General Comparison Information for Each Alternative 53
Table 10-1 Comparative Analysis of Soil and Groundwater Remedial Action Alternatives with Respect to CERCLA Criteria 55
Table 12-1 Cost Estimate Summary for the Selected Remedy for Soil 69
Table 12-2 Cost Estimate Summary for the Selected Remedy for Groundwater 70

Table 12-3 Present Worth Cost Analysis for the Selected Remedy for Soil 71
Table 12-4 Present Work Cost Analysis for the Selected Remedy for Soil 72
Table 12-5 Cleanup Levels for Contaminants of Concern 75
Table 13-1 ARARs for Selected Remedy 78

LIST OF FIGURES

Figure 1-1 Site Location Map 7
Figure 1-2 Site Layout 7
Figure 5-1 Conceptual Site Model for Cooper Drum Site 11
Figure 5-2 Extent of Groundwater Plume 18
Figure 5-3 Deep Aquifer System and Production Wells 20

PART I THE DECLARATION

1.1 Site Name and Location

Cooper Drum Company
9316 Atlantic Avenue
City of South Gate, Los Angeles County, California 90280
CERCLIS Identification Number CAD055753370.

1.2 Statement of Basis and Purpose

This decision document presents the selected remedy for the Cooper Drum Company Superfund Site (Cooper Drum), in South Gate, California, which was chosen in accordance with Comprehensive Environmental Response, Compensation and Liability Act of 1980, as amended by Superfund Amendments and Reauthorization Act of 1986 (SARA) (collectively referred to herein as CERCLA) and to the extent practicable, the National Oil and Hazardous Substances Pollution Contingency Plan, (NCP). This decision is based on the Administrative Record file for Cooper Drum.

The State of California, acting through the California Department of Toxic Substances Control (DTSC) and the Los Angeles Regional Water Quality Control Board (LARWQCB), concur with the selected remedy.

1.3 Assessment of Site

The response action selected in this Record of Decision (ROD) is necessary to protect the public health or welfare or the environment from actual or threatened releases of hazardous substances, pollutants or contaminants from the Cooper Drum site which may present an imminent and substantial endangerment to public health or welfare.

1.4 Description of Selected Remedy

The remedial action for Cooper Drum addresses contaminated soil and groundwater. To remove the potential threat to human health, the selected remedy will use dual phase extraction (DPE) for treatment of volatile organic compounds (VOCs) in soil and perched groundwater. Other non-VOC soil contaminants, including semi-volatile organic compounds (SVOCs), PCBs, and lead, will be excavated and disposed of off site. Institutional controls will be implemented to prevent exposure to soil contaminants where excavation is not feasible. The cleanup strategy for groundwater contaminated with VOCs will use a combination of methods to achieve remedial goals and to restore the potential beneficial use of the aquifer as a drinking water source. An extraction/treatment system will be used for containment and remediation. Chemical in situ treatment will also be used to enhance the treatment of VOCs in groundwater, minimize the need for extraction, and reduce the potential for other VOC plumes in the vicinity to impact Cooper Drum.

There is no source material or non-aqueous phase liquids (NAPLs) in the groundwater constituting a principal threat at Cooper Drum. The VOCs in the soil are mobile but are low-level threats to

human health since they contain relatively low contaminant concentrations and can be contained. The non-VOCs in the shallow soil are not mobile and are localized in a confined area.

The major components of the selected remedy includes the following actions:

Selected Remedy for Soil

- In the former hard wash area (HWA), extract VOC-contaminated soil vapor and groundwater simultaneously using dual phase extraction (DPE) technology. Treat the extracted soil vapor and groundwater using vapor and liquid phase carbon in vessels at an on-site treatment plant.

- After removal of VOCs, discharge the treated soil vapor into the air. The treated water will be reinjected into the aquifer or discharged to the public sewer system operated by the Los Angeles County Sanitation District.

- Conduct additional soil gas sampling in the drum processing area (DPA) during the remedial design (RD) phase to further identify the extent of VOC contamination and the need for remediation using dual phase extraction in this area.

- In the HWA and DPA, excavate an estimated 2,700 tons of non-VOC contaminated shallow soil (estimated down to five feet in depth) for disposal at an approved off-site facility. Use clean soil to backfill excavated areas.

- Conduct additional soil sampling in the DPA and HWA during the RD phase to further define the extent of non-VOC contamination and the need for remediation beyond the estimated 2,700 tons of soil.

- Implement institutional controls for soil contaminated with non-VOCs in areas where excavation is not feasible, such as under existing structures, by requiring the execution and recording of a restrictive covenant which will limit activities that might expose the subsurface and would prevent future use, including residential, hospital, day care center and school uses, as long as contaminated soil remains on site.

Selected Remedy for Groundwater

- Extract groundwater contaminated with VOCs and treat it using liquid-phase activated carbon in vessels at an on-site treatment system. Containment will be provided at the downgradient extent of contamination.

- The treated water will be reinjected into the contaminated groundwater aquifer or discharged to the public sewer system operated by the Los Angeles County Sanitation District. Reinjection will reduce the intrusion of and the potential for mixing with other off-site VOC plumes.

- Use in situ chemical treatment, either reductive dechlorination or chemical oxidation, to enhance remediation of VOC-contaminated groundwater. During the remedial design (RD) phase, conduct treatability studies to evaluate both methods and determine which works best under site conditions. Data obtained from pilot studies will also be used to determine the specific number and placement of in situ injection points.

- Conduct additional groundwater sampling during the RD phase to further define the downgradient extent of the VOC contamination.

- Conduct groundwater monitoring to evaluate the effectiveness of the remedy, the location of the plume, and that remediation goals have been met.

1.5 Statutory Determination

The selected remedy is protective of human health and the environment, complies with federal and state requirements that are applicable or relevant and appropriate to the remedial action, is cost-effective, and utilizes permanent solutions and alternative treatment technologies to the maximum extent practicable.

This remedy also satisfies the statutory preference for treatment as a principal element of the remedy (i.e., reduces the toxicity, mobility, or volume of hazardous substances, pollutants, or contaminants as a principal element through treatment).

Because this remedy may result in hazardous substances, pollutants, or contaminants in soil remaining on site above levels that allow for unlimited use and unrestricted exposure, and will take longer than five years to attain RAOs and cleanup levels, a review will be conducted within five years after initiation of the remedial action for Cooper Drum to ensure that the remedy is, or will be, protective of human health and the environment.

1.6 ROD Data Certification Checklist

The following information is included in the Decision Summary section of this Record of Decision. Additional information can be found in the Administrative Record file for Cooper Drum.

- Chemicals of concern and their respective concentrations - Page 15;

- Baseline risk represented by the chemicals of concern - Page 21;

- Cleanup levels established for chemicals of concern and the basis for these levels - Page 74;

- Conclusion that there are no source materials constituting principal threats at the site - Page 63;

- Current and reasonably anticipated future land use assumptions and current and potential future beneficial uses of groundwater used in the baseline risk assessment and ROD - Page 19;

- Potential land and groundwater use that will be available at the site as a result of the selected remedy - Page 73;
- Estimated capital, annual operation and maintenance (O&M), and total present worth costs, discount rate, and the number of years over which the remedy cost estimates are projected - Page 69; and
- Key factor(s) that led to selecting the remedy - Page 64.

1.7 Authorizing Signature

John Kemmerer, Chief
Superfund Site Cleanup Branch
U.S. Environmental Protection Agency, Region 9

9/27/02
Date

PART II THE DECISION SUMMARY

1.0 Site Name, Location, and Description

The Cooper Drum Company Superfund Site (Cooper Drum) is located at 9316 South Atlantic Avenue in South Gate, Los Angeles County, California (CERCLIS Identification Number CAD055753370). It is 10 miles south of the city of Los Angeles and approximately 1,600 feet west of the Los Angeles River (Figure 1-1). The property consists of 3.8 acres and is located in an urban area of mixed residential, commercial, and industrial uses. Cooper Drum is zoned for heavy industrial land use and has been used to recondition and recycle steel drums. Facilities include processing areas for cleaning and painting drums, storage areas, an office, a warehouse, and maintenance buildings. All buildings have concrete floors, and the entire facility was paved with asphalt in 1986.

The lead agency for Cooper Drum is the U.S. Environmental Protection Agency (EPA). The California Department of Toxic Substances Control (DTSC) and Los Angeles Regional Water Quality Control Board (RWQCB) serve as support agencies. Currently, the expected source of cleanup monies is the Superfund trust fund since the Cooper Drum Company filed for bankruptcy in 1993, and no other potentially responsible parties have been identified.

2.0 Site History and Enforcement Activities

2.1 Site History

Since 1941, Cooper Drum has been used by several companies to recondition and recycle used steel drums that once contained a variety of industrial chemicals. The Cooper Drum Company operated from 1972 to 1992, reconditioning drums with a process that consisted of flushing and stripping the drums for painting and resale. Drum process waste was collected in open concrete sumps and trenches that resulted in releases to soil and groundwater beneath the site.

A history of the site's use for reconditioning and recycling steel drums containing residual chemicals, includes the following:

- Since 1941, the northern portion of Cooper Drum has been owned and operated by drum recycling companies (the use and ownership of the southern portion of the site prior to 1971 is unknown). The Cooper Drum Company purchased both parcels and operated the facility from 1972 until 1992.

- Reconditioning activities took place within the present-day drum processing area (DPA) (see Figure 1-2) which is located in the central portion of Cooper Drum. When necessary, heavy duty cleaning called "hard washing" was performed in the northeast portion of the site [the former hard wash area (HWA)-see Figure 1-2]. Caustic fluids, generated by reconditioning and hard washing activities, and waste materials, removed from inside the drums, were collected in open concrete sumps and trenches. This led to the contamination of the soil and

groundwater beneath Cooper Drum. Recent investigations have shown that most contamination at Cooper Drum can be traced to the HWA and the DPA.

- Beginning in 1987, the Cooper Drum facilities were retrofitted to provide better environmental protection. Closed-top steel tanks were installed over the sumps, and the trenches have been replaced with hard piping. The former hard wash area was closed and replaced with a new hard wash area in the DPA which also provided hard piping and secondary containment.

- The Cooper Drum Company continued to operate the facility until 1992. In 1992, the drum reconditioning business was sold to Waymire Drum Co., which operated the facility until 1996.

- Since 1996, Consolidated Drum Co. has been the drum reconditioning operator at the site. The facility has been fitted to also process plastic totes (large square containers). Consolidated Drum continues to use an above-ground enclosed system for containing liquids and wastes.

2.2 Previous Investigations and Enforcement Activities

Beginning in 1984 through 1989, several incidents involving the release of hazardous substances at the site resulted in Notice of Violations being issued to the Cooper Drum Company by the Los Angeles Department of Health Services (LADHS). The LADHS required the Cooper Drum Company to conduct investigations of soil and groundwater. In 1989, the California Department of Health Services, now known as the Department of Toxic Substances Control (DTSC), also collected soil samples from under the DPA. The studies identified the following hazardous substances in soils at or near Cooper Drum:

- Tetrachloroethylene (PCE, a cleaning solvent)
- Trichloroethylene (TCE, a cleaning solvent)
- Dichloroethylene (DCE, a by-product of TCE)
- Petroleum hydrocarbons
- Polychlorinated biphenyls (PCBs)
- Polyaromatic hydrocarbons (PAHs)
- Metals

Under the direction of the LADHS, consultants for the Cooper Drum Company excavated and removed contaminated soil from their property and from the adjacent Tweedy Elementary School, after caustic fluids leaked from trenches under the drum processing building onto school property. To assess impacts to groundwater in the uppermost aquifer beneath Cooper Drum (approximately 40 to 80 feet below ground surface), four monitoring wells were installed on site and one upgradient well off site.

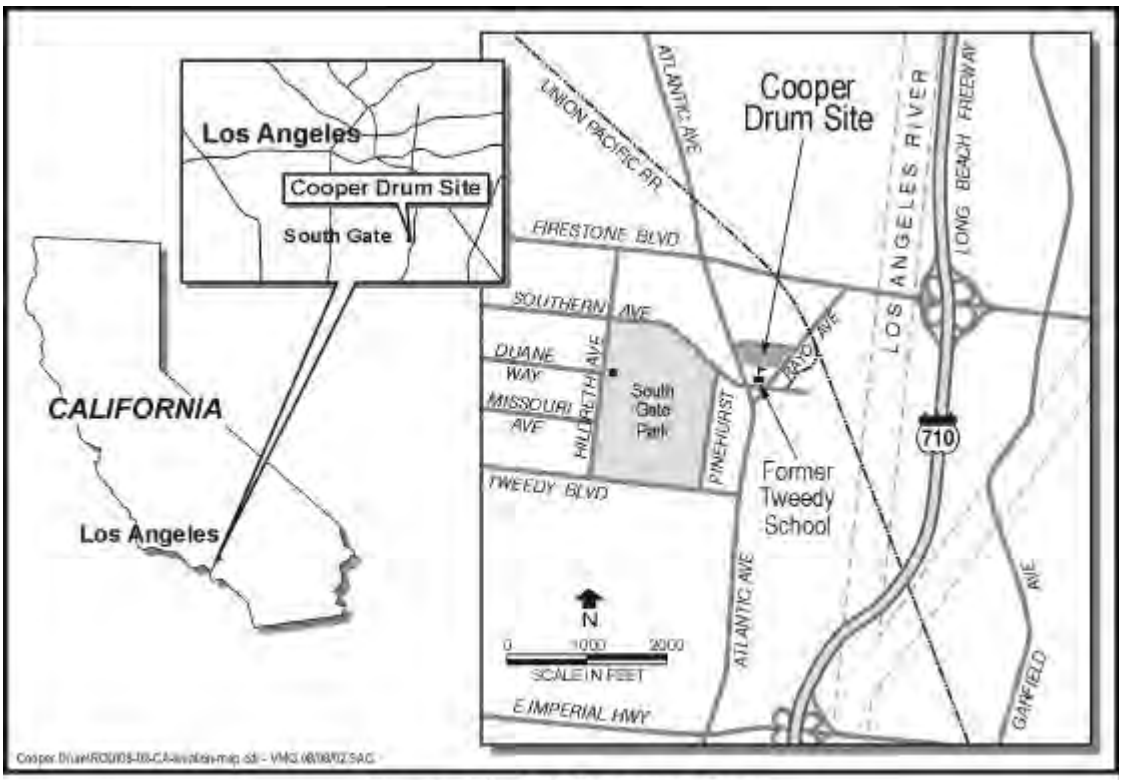

Figure 1-1. Site Location Map

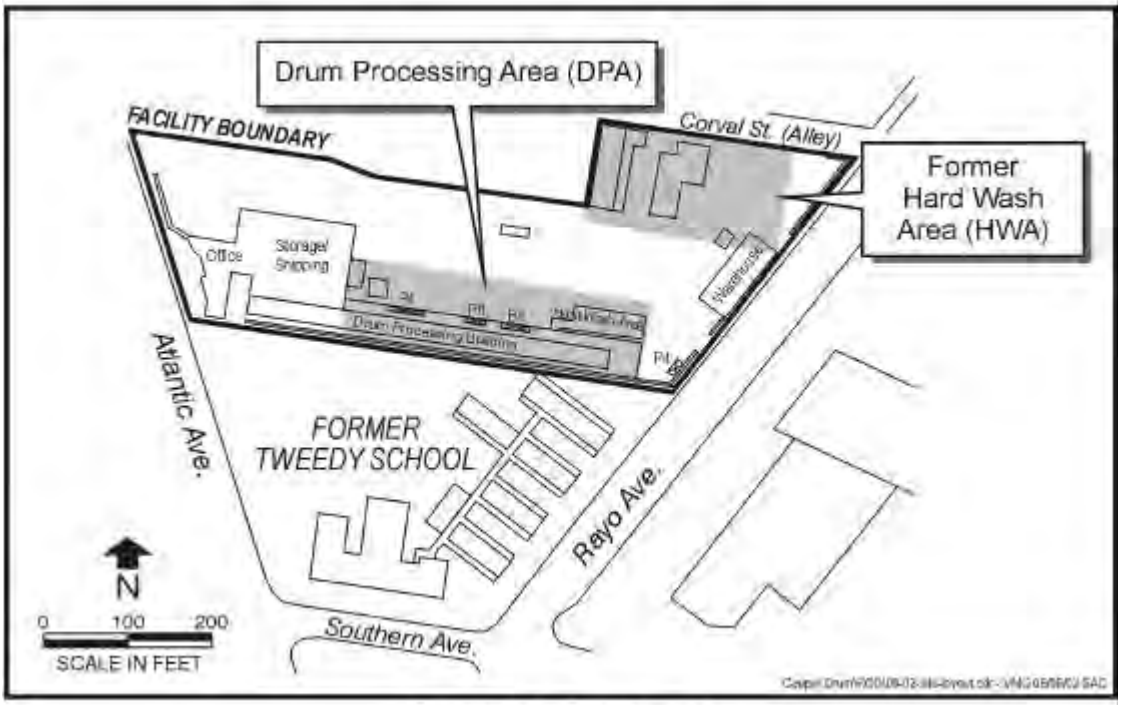

Figure 1-2. Site Layout

The groundwater beneath Cooper Drum was identified as contaminated with VOCs. In 1987, the City of South Gate closed four municipal water supply wells found to contain PCE. These wells are located in South Gate Park within 1,500 feet southwest of the site. At that time, the City listed Cooper Drum as a possible source of the PCE contamination, however, recent investigations indicate that groundwater contamination found beneath the site did not contribute to the deeper groundwater contamination affecting these municipal wells. The groundwater contamination originating from Cooper Drum is moving to the south and not toward the municipal wells. It is also confined to the upper aquifer and is not currently affecting any drinking water supplies in the City of South Gate because the municipal wells are completed in deeper aquifers.

The Tweedy School, located on the adjacent property, was closed in 1988 due to the concern that children attending the school could be exposed to contamination migrating from Cooper Drum and from other industrial operations in the area.

Based on the discovery of the soil and groundwater contamination described above, EPA first proposed Cooper Drum for inclusion on the National Priorities List (NPL) in 1992. EPA issued General Notice and 104(e) letters to Cooper Drum owners and operators at that time. During 1993, EPA met with Arthur Cooper, the site owner (and previous operator before Waymire Drum Co. took over operations in 1992) who was considered a potentially responsible party (PRP). The purpose of the meeting was to discuss the special notice letter EPA was planning to send to him and to begin negotiations for an Administrative Order on Consent (AOC) to conduct the Remedial Investigation. Later that same year, the Cooper estate declared bankruptcy upon the death of Mr. Cooper. Due to the lack of assets, the Cooper estate was no longer considered a viable PRP to help pay for Cooper Drum investigation and remediation. Consequently, Cooper Drum became a fund-lead site where Superfund trust fund money is used for site activities. Based on additional site investigation data collected by EPA, Cooper Drum was re-proposed for the NPL in January 2001. In June 2001, the EPA added Cooper Drum to the NPL of hazardous waste sites requiring remedial action.

EPA conducted the Remedial Investigation (RI) activities for Cooper Drum during 1996 to 2001. EPA initiated a soil gas survey in 1996 to identify potential hot spots (areas where contaminant concentrations of VOCs are the highest) for a Phase 1 RI. This investigation identified hot spots in the vicinity of the former HWA in the northeastern portion of the property and in the DPA in the central portion of the property. The Phase 1 RI was designed to further investigate the potential presence of VOCs, semi-volatile organic compounds (SVOCs) and metals in soil and groundwater beneath Cooper Drum and the adjacent Tweedy School property. Based on the results of the Phase 1 RI, EPA expanded its investigation of soil and groundwater to delineate the extent of contamination as part of a Phase 2 RI conducted between September 1998 and March 2001. The complete RI report was released in May 2002, and is discussed further in Section 5.0.

Nearby properties, which have also undergone investigation as sources of groundwater contamination under the direction of the LARWQCB, include the Jervis Webb site (north of Cooper Drum) and two former Dial Corporation sites (northeast and east of Cooper Drum). Data from investigations at these three sites have determined that groundwater flows in a southerly direction. High concentrations of TCE in the shallow aquifer have been detected under the Jervis Webb site (33,000 parts per billion) and in a downgradient monitoring well (6,700 parts per billion), which is located 200 feet upgradient and northeast of Cooper Drum. Due to its proximity, the groundwater

contamination from Jervis Webb may already have commingled and impacted the Cooper Drum plume. The need to reduce the potential for commingling of these two plumes was an important factor considered during remedy selection.

3.0 Community Participation

During March and April 2001, EPA interviewed concerned residents, agency representatives, elected officials, and a community- based environmental justice organization. Based on these interviews, EPA prepared The Cooper Drum Community Involvement Plan which was issued in March 2002.

In May 2002, the RI/FS Report and Proposed Plan for Cooper Drum were made available to the public. These documents can be found in the Administrative Record file at the EPA Region 9 Record Center located at 95 Hawthorne Street in San Francisco and at the information repository located at the Leland R. Weaver Library at 4035 Tweedy Boulevard in South Gate, California. A Public Notice was published June 11, 2002 in the *Long Beach Press Telegram* to notify community members about the availability of the RI/FS and Proposed Plan. The Proposed Plan was also mailed to the community. The Public Notice announced the date and location for the public meeting and identified the public comment period (June 11 through July 10, 2002) for the Proposed Plan. In addition, flyers announcing the meeting were hand delivered to nearby residents and parents of children attending the relocated Tweedy Elementary School. All materials, including the Proposed Plan fact sheet, meeting presentation slides and handouts were prepared in both English and Spanish.

The public meeting for the Proposed Plan was held June 27, 2002. At this meeting, representatives from the City of South Gate Planning Department, DTSC, and EPA answered questions about the problems at Cooper Drum and the remedial alternatives. No significant comments or objections concerning the preferred remedial alternatives were raised at the meeting. Transcripts of the public meetings are part of the administrative file at the information repositories. EPA did not receive any written comments from the community during the public comment period for the Proposed Plan. The one written comment received from the California DTSC is addressed in the Responsiveness Summary in Part III.

4.0 Scope and Role of Operable Unit or Response Action

Cooper Drum contains two sources of contamination (i.e., HWA and DPA) and one groundwater plume that requires remedial action. The VOC soil contamination in the HWA appears to be the main source of contaminants found in the groundwater. The VOC soil contamination found in the DPA appears to have minimal contribution to the groundwater plume. Soil removals were conducted on the north side of the DPA in 1984, and along the south side of the DPA on the Tweedy School in 1987. No other removal or interim action was taken or is planned at Cooper Drum. Because of the relatively small area addressed in the selected remedy, dividing Cooper Drum into discrete portions, or operable units, for the purpose of managing a site-wide response action is not necessary.

The selected remedy will address soil and groundwater contamination for Cooper Drum. This response action involves control and treatment of VOC contaminants in the groundwater plume

migrating from under the HWA, treatment of VOC soil contaminants in the HWA (and potentially from the DPA), and removal of the non-VOC soil contaminants at the HWA and DPA. Institutional controls will be implemented to limit exposure to any contaminated soil left on site.

5.0 Site Characteristics

5.1 Conceptual Site Model

The conceptual site model (CSM), presented on Figure 5-1, is based on the following exposure pathways: 1) Ingestion, dermal contact, and inhalation of groundwater contaminants; 2) Ingestion and direct contact with surface and subsurface soil; 3) Inhalation of airborne contaminants in outdoor air originating from soil; and 4) Inhalation of indoor air contaminants originating from soil and groundwater contamination. The receptors include future on-site and off-site residents, construction workers, and occupational workers. Assumptions applied to these pathways include: 1) pavement, concrete, buildings, and other existing cover could be removed to expose the underlying soil and 2) groundwater wells would be completed in the shallow aquifer underneath Cooper Drum and the water would be used as an untreated drinking water source. The deeper drinking water aquifers underlying Cooper Drum have not been impacted by contamination above drinking water standards; however the potential exists that contamination could migrate downward into these aquifers and adversely impact municipal water supplies. The concentration levels of soil and groundwater contaminants used in the risk assessment are based on the average (95% upper confidence limit) or the maximum concentrations detected during the RI activities. There are no ecological habitats or ecological exposures at Cooper Drum. The exposure pathways depicted in the CSM are discussed further in Section 7.1.2.

5.2 Overview of Cooper Drum

The majority of the 3.8 acre Cooper Drum property is developed for heavy industrial use, is mostly covered with asphalt or concrete, and is relatively flat with a gradual slope toward the southeast.

The property is located approximately 1,600 feet west of the Los Angeles River, which is concrete lined and flows south to southwest approximately 15 miles to the Pacific Ocean. Stormwater flows toward several drains and into the municipal stormwater system, which discharges to the Los Angeles River.

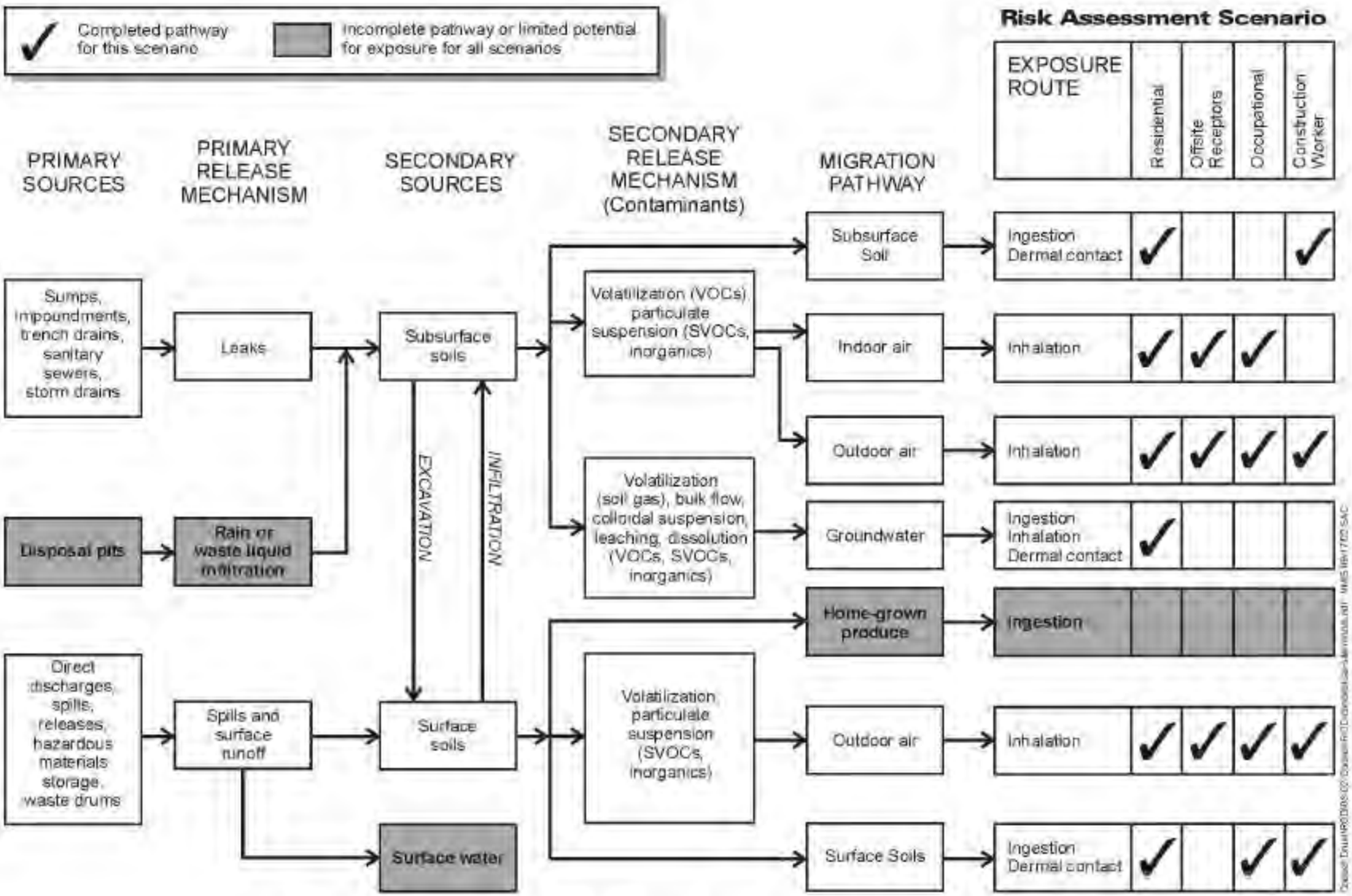

Figure 5-1. Conceptual Site Model for Cooper Drum Company Site

5.3 Surface and Subsurface Features

Open structures for recycling activities are located along the southern and northeastern property boundaries. A closed warehouse, which provides storage of equipment, is located on the eastern boundary. The majority of Cooper Drum is open and provides storage for drum and totes. A closed office building is located on the western property boundary. There are no known areas of archaeological or historical features at Cooper Drum. The subsurface aquifers beneath the site are described in section 5.7.2.

5.4 Sampling Strategy

Prior to 1996, soil sampling was performed mostly in and around the DPA with some borings located in the HWA. Four wells were installed on site (MW-1 and MW-4 in the DPA and MW-2 and MW-5 in the HWA) and one well upgradient (MW-3). All wells were completed to approximately 80 feet below ground surface (bgs) into the shallow aquifer. In 1996, EPA performed a site-wide passive soil gas survey. The VOC hot spots were subsequently investigated as part of the RI activities beginning in 1998.

The RI activities conducted in 1998 included: 1) soil sampling (down to 40 feet) and depth-discrete groundwater sampling (down to 200 feet) in borings SB-1 through SB-5; 2) sampling of the five existing on-site monitoring wells (MW-1 through MW-5); 3) soil logging and depth-discrete groundwater sampling (down to 120 feet) from four CPT borings (CPT-1 through CPT-4) located east of the site; and 4) sampling of four existing monitor wells on the ELG Metals property located east of Cooper Drum. The ELG Metals property wells are located further east of CPT-1 through CPT-4 and were sampled to confirm historical sample results and provide a data set consistent with the Phase 2 RI data to evaluate VOC distribution east of Cooper Drum.

Based on the results from the above-described field activities, additional RI activities were completed in March, April, and May 1999 including: 1) soil logging and depth discrete groundwater sampling from six CPT borings (CPT-5 through CPT-10); 2) installation and aquifer testing of one groundwater monitor/extraction well (EW-1); 3) sampling of six soil gas boring locations (SG-1 through SG-6) located in the HWA and DPA. Four of the CPT borings were located east and southeast of Cooper Drum to further delineate the extent of groundwater contamination. Well EW-1 was installed along the eastern boundary of Cooper Drum adjacent to Rayo Avenue. The well was installed to evaluate the extent of groundwater contamination along the eastern property boundary. Soil gas samples were sampled at approximately 10-foot sample intervals to 45 feet bgs to evaluate VOC vadose zone contamination in suspected source areas.

Additional RI activities were conducted between October 2000 and March 2001 and discussed below. Ten shallow borings (SB-8 to SB-17) were sampled to approximately 10 feet bgs. Five borings (SB-8 through SB-12) were located in the former HWA, and four borings (SB-13 through SB-16) were located around the drum processing building to assess VOC and non-VOC soil conditions. Eleven soil vapor borings (SG-7 to SG-17) were sampled to a depth of approximately 35 feet bgs in the vicinity of former HWA and the drum processing building to further delineate vadose contamination observed in the soil gas samples collected during the 1999 field investigations.

Fourteen cone penetrometer borings (CPT-11 through CPT-24) were logged and sampled to a minimum depth of 120 feet bgs to further delineate the extent of impacted groundwater. Six new groundwater monitoring wells (MW-15 to MW-19 and EW-2) were installed and sampled. One well was on site and five were off site. The on-site well, EW-2, was completed in the shallow aquifer to approximately 80 feet and was designed as a groundwater extraction well. The other five wells were completed along Rayo Avenue in the shallow aquifer to define the lateral extent of groundwater contamination. Two of the off-site wells, MW-16 and MW-18, were completed to a total depth of approximately 130 feet bgs in the top of the Exposition Aquifer to define the vertical extent of groundwater contamination. Groundwater samples were also collected from six existing on-site wells (MW-1, MW-2, MW-3, MW-4, MW-5, and EW-1) and four off-site wells (MW-8, MW-10, MW-12, and MW-14). An eight-hour aquifer pump test was performed on EW-2 to aid in determining remedial alternatives. One soil vapor well (SVE-1) and two sets of soil vapor monitoring points (VP-1 and VP-2) were sampled, tested, and installed in the former HWA. Performance of the soil vapor extraction test was used to evaluate remedial alternatives.

5.5 Known and Suspected Sources of Contamination

The RI investigation confirmed that waste collected in open concrete sumps and trenches resulted in releases to soil, and that migration of some of these contaminants impacted the shallow aquifer beneath Cooper Drum. The primary source area of contamination was the HWA, where drum processing operations took place until 1976 when they were moved to the DPA on the south side of the property. The DPA also became a source of contamination due to chemical spills that were documented during the 1980's. Beginning in 1987, the Cooper Drum facilities were upgraded to prevent any further release of chemical wastes and to meet environmental regulations. The former hard wash area was closed and replaced with a new hard wash area in the DPA. The location of the former HWA and DPA are shown on Figure 1-2.

.

5.6 Types of Contamination and Affected Media

Operations at Cooper Drum have resulted in the discharge of contaminants to the vadose zone and the underlying groundwater. Although a variety of chemicals have been released to Cooper Drum, VOCs are the chemicals that are found in both the vadose zone and groundwater. VOCs and non-VOCs have been found in the vadose zone.

The principal chemicals of concern (COCs) identified for the groundwater pathway are 1,2,3-trichloropropane (TCP), TCE, and 1,2-dichloroethane (1,2-DCA). Eight other COCs contributing to the overall risk are vinyl chloride (VC), 1,2-dichloropropane (1,2-DCP), 1,1-dichloroethane (1,2-DCA), 1,1-DCE, cis-1,2-dichloroethene (cis-1,2-DCE), PCE, trans-1,2-dichloroethene (trans-1,2-DCE), and benzene. The groundwater plume is characterized by high levels of cis-1,2-DCE and TCE. Arsenic and metals found in groundwater at concentrations exceeding drinking water standards are considered to be naturally occurring.

The principal VOC contaminants for the soil pathway are the same 11 VOCs listed above for groundwater. The non-VOCs for the soil pathway are benzo(a)pyrene, along with PCBs (Aroclor-1260 and Aroclor-1254), lead, benzo(b)fluoranthene, dibenz(a,h)anthracene, benzo(a)anthracene, benzo(k)fluorathene, chrysene, and indeno(1,2,3-cd)pyrene. Exposure to contaminants in indoor air,

by on-site or off-site workers and residents, also represents a likely exposure pathway evaluated in the risk assessment summarized in Section 7.0. This scenario assumes no pavement on the property, although currently the property is paved. Soil lead concentrations of 1,920 to 3,240 mg/kg were detected in subsurface and surface soils. The COCs for Cooper Drum are summarized in Table 5-1.

Table 5-1
Types and Characteristics of Contaminants of Concern (COCs)

Contaminant (VOCs)	Source	Medium	Maximum Concentration		Frequency of Detection		Mobility	Carcinogenic
			Soil (mg/kg)	Ground water (µg/L)	Soil (mg/kg)	Groundwater (µg/L)		
Benzene	Former HWA Activities	Soil/ Groundwater	0.02	30	10/70	23/34	High	Yes
1,1-Dichloroethane (1,1-DCA)	Breakdown product	Soil/ Groundwater	0.23	340	17/70	26/35	Very high	Yes
1,1-Dichloroethene (1,1-DCE)	Breakdown product	Soil/ Groundwater	0.014	54	6/70	23/53	High	No
1,2,3-trichloropropane	Breakdown product	Soil/ Groundwater	0.044	50	1/6	20/31	High	Yes
1,2-Dichloroethane (1,2-DCA)	Breakdown product	Soil/ Groundwater	0.039	100	3/70	32/32	Very high	Yes
1,2-Dichloropropane (1,2-DCP)	Breakdown product	Soil/ Groundwater	0.019	50	3/70	24/34	High	Yes
cis-1,2-Dichloroethene (c-1,2-DCE)	Breakdown product	Soil/ Groundwater	1.1	1,200	17/64	31/33	Very high	No
Tetrachloroethene (PCE)	Former HWA Activities	Soil/ Groundwater	8.2	57	22/70	15/36	High	Yes
trans-1,2-Dichloroethene (t-1,2-DCE)	Breakdown product	Soil/ Groundwater	0.005	46	5/70	23/32	Very high	No
Trichloroethene (TCE)	Former HWA Activities	Soil/ Groundwater	0.16	800	18/70	30/34	High	Yes
vinyl chloride	Breakdown product	Soil/ Groundwater	N/A	15	N/A	25/33	Very high	Yes

Table 5-1
Types and Characteristics of Contaminants of Concern (COCs)

Contaminant (non-VOCs)	Source	Medium	Maximum Concentration		Frequency of Detection		Mobility	Carcinogenic
			Soil (mg/kg)	Ground water (µg/L)	Soil (mg/kg)	Groundwater (µg/L)		
Aroclor-1254	Unknown	Soil	1.4	N/A	6/14	N/A	Low	Yes
Aroclor-1260	Unknown	Soil	5.5	N/A	6/14	N/A	Low	Yes
Benzo(a)pyrene	Unknown	Soil	4.3	N/A	3/13	N/A	Low	Yes
Benzo(b)fluoranthene	Unknown	Soil	6.6	N/A	3/13	N/A	Low	Yes
Benzo(k)fluoranthene	Unknown	Soil	4.6	N/A	3/13	N/A	Low	Yes
Chrysene	Unknown	Soil	4.7	N/A	4/47	N/A	Low	Yes
Dibenz(a,h)anthracene	Unknown	Soil	1.1	N/A	3/13	N/A	Low	Yes
Indeno(1,2,3-cd)pyrene	Unknown	Soil	2.1	N/A	4/13	N/A	Low	Yes
Lead	Former HWA Activities	Soil	3,240	N/A	11/12	N/A	Low	No

5.7 Location of Contamination and Potential Routes of Migration

5.7.1 Soil Contamination

Eleven VOCs were identified as COCs in soil with the potential for vertical migration to the aquifer underlying Cooper Drum. Investigations have shown that most contamination at Cooper Drum originated from the HWA and the DPA. The HWA is contaminated with soil gas concentrations in excess of 1,000 parts per billion by volume (ppbv) and extends approximately 200 feet north to south and 150 feet east to west. The DPA area of soil contamination is shallower and not as laterally extensive. There are data gaps with respect to the lateral and vertical extents of VOCs beneath the drum processing building. Further delineation of contaminants beneath the DPA will be performed as part of the remedial design.

Ten non-VOCs, including polycyclic aromatic hydrocarbons (PAHs), PCBs, and lead were identified as COCs in soil. These contaminants, found in shallow soil samples beneath the DPA and HWA, are not migrating off site or to other media. The lateral and vertical extents of non-VOCs in the HWA and DPA will require further delineation during the remedial design. Based on existing data, the total volume of soil contaminated with non-VOCs has been estimated to be approximately 2,300 cubic yards. Several metals and arsenic were investigated and considered to be naturally occurring, based on statistical testing and comparison to background studies in available literature.

5.7.2 Groundwater Contamination

One of the affected media at Cooper Drum is groundwater in the shallow aquifer. The groundwater plume from Cooper Drum is estimated to be 800 feet long and 250 feet wide and extends approximately 400 feet southeast of the Cooper Drum boundary (see Figure 5-2). Investigations have not detected DNAPLs in soil or groundwater at Cooper Drum. The groundwater flow direction beneath the former HWA in the northeast portion of Cooper Drum (i.e., the source area of contamination) is to the southeast. East of Cooper Drum along Rayo Avenue, the groundwater flow direction is southerly.

The estimated lateral and vertical extent of VOCs (based on TCE concentrations) in the shallow aquifer at Cooper Drum is presented in Figure 5-2. A generalized geologic cross section showing the water- bearing units and vertical extent of groundwater contamination is also shown on Figure 5-2. Shallow groundwater beneath Cooper Drum occurs within or is controlled by an area of lower permeability, the near surface Bellflower Aquiclude, which incorporates a perched aquifer. The perched aquifer is present in the HWA at approximately 35 feet bgs and is at least 5 feet thick. The perched aquifer has been observed to be intermittent and the lateral extent has not been confirmed. The Bellflower Aquiclude extends to a depth of approximately 70 feet bgs, where it overlies the Gaspur Aquifer, which extends to a depth of approximately 110 feet bgs. Groundwater contamination above drinking water standards has been found only down to the shallow Gaspur Aquifer. Finer-grained material (clays and silts) are present within the upper portion of the Bellflower Aquiclude and the lower portion of the Gaspur Aquifer which has minimized the vertical migration of VOCs down into the Exposition and deeper aquifers which are used for drinking water.

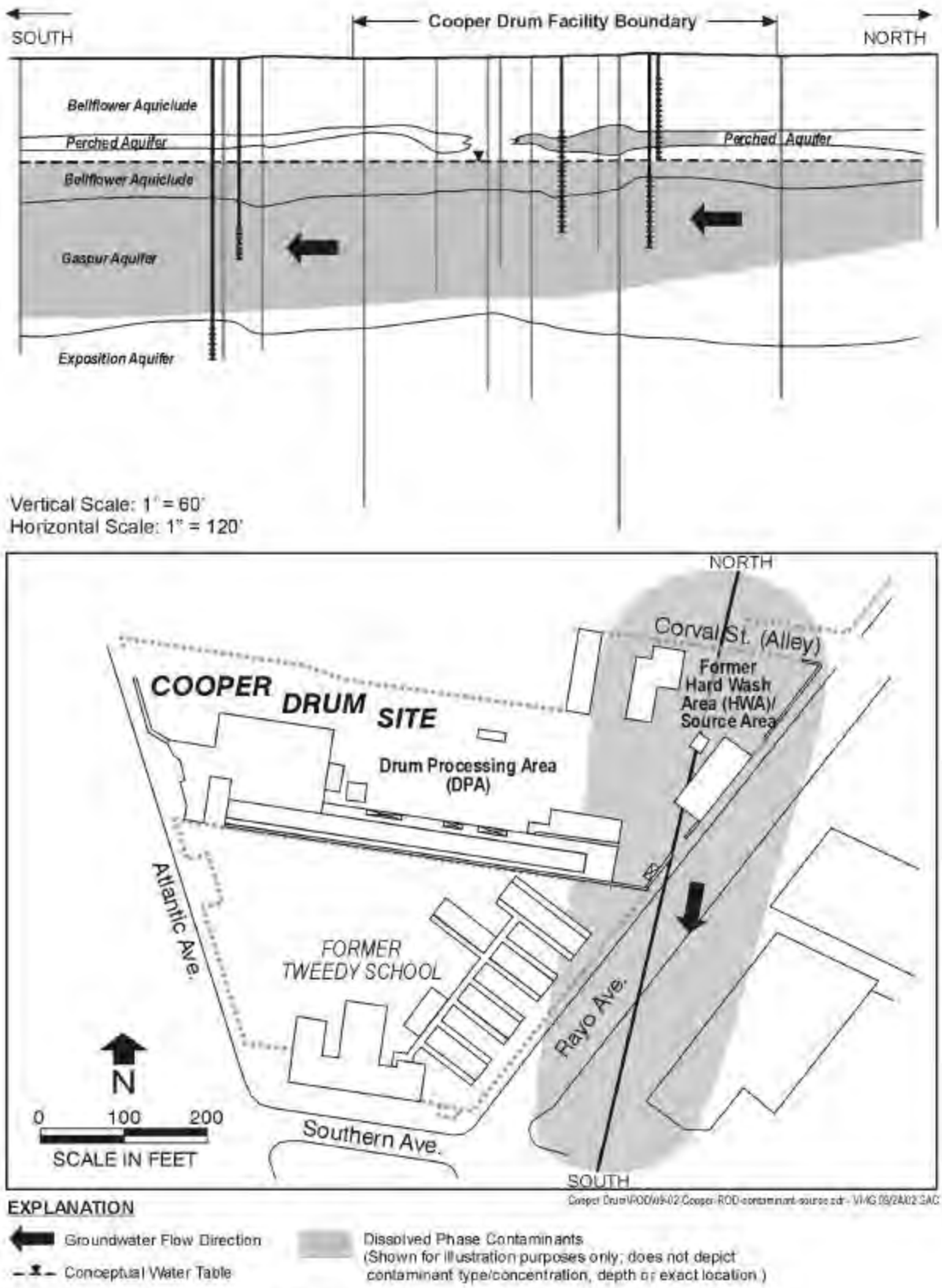

Figure 5-2. Extent of Groundwater Contamination

Municipal groundwater production wells in the vicinity of Cooper Drum draw water from the Gage Aquifer, the deepest of the Lakewood Formation aquifers at approximately 300 feet bgs, as well as from deeper aquifers within the San Pedro Formation. The Exposition Aquifer is the uppermost unit of the deeper aquifer system, and underlies the Gaspur Aquifer. The Exposition Aquifer is one of four water-bearing units within the Upper Pleistocene Lakewood Formation.

The RWQCB has identified the shallow aquifer as a potential source of drinking water and there is a potential for vertical migration of VOC into the deeper aquifer system and production wells. A generalized geological cross section of the deeper aquifer system, including production wells, is shown on Figure 5-3.

6.0 Current and Potential Future Site and Resource Uses

Cooper Drum is located in a dense urban land use setting of mixed residential, commercial, and industrial parcels. The surrounding land uses are anticipated to be of mixed urban uses in the future. The ongoing drum processing operations at Cooper Drum are considered to be a heavy industrial use for which the property is currently zoned. According to its Community Development Department, the City of South Gate is currently in the process of developing a General Plan update (the Plan) in which it is reevaluating land use designations and development options for the next 10 to 15 years within the city. The Plan is expected to be adopted by the summer of 2003. New zoning restrictions would then be enacted to conform with any changes made to land use designations in the Plan.

Future reasonably anticipated land use options for Cooper Drum include light industrial and high density commercial. Current drum processing operations could continue under a “grandfather rule” which allows for non-conforming status as long as operations are not expanded. Due to the proximity to the area where a regional high speed rail corridor may be built, it is also possible that future development for residential housing could be considered for Cooper Drum. This could occur only after the selected remedy for soil is completed and all contaminated soil above cleanup levels is removed from Cooper Drum.

The contaminated groundwater under Cooper Drum is semi-confined in the upper aquifer and characterized as shallow groundwater of poor quality water. Although the upper aquifer is not currently used as a drinking water source, it is designated by the RWQCB in the Water Quality Control Plan for the Los Angeles Region (Basin Plan) as having a potential beneficial use for drinking water. There are no other current or potential beneficial uses associated with groundwater under Cooper Drum. The potential for on-site residential land use, which includes groundwater at Cooper Drum as a drinking water source, is the most conservative scenario used as a basis for reasonable exposure assessment assumptions and risk characterization conclusions discussed in Section 7.0.

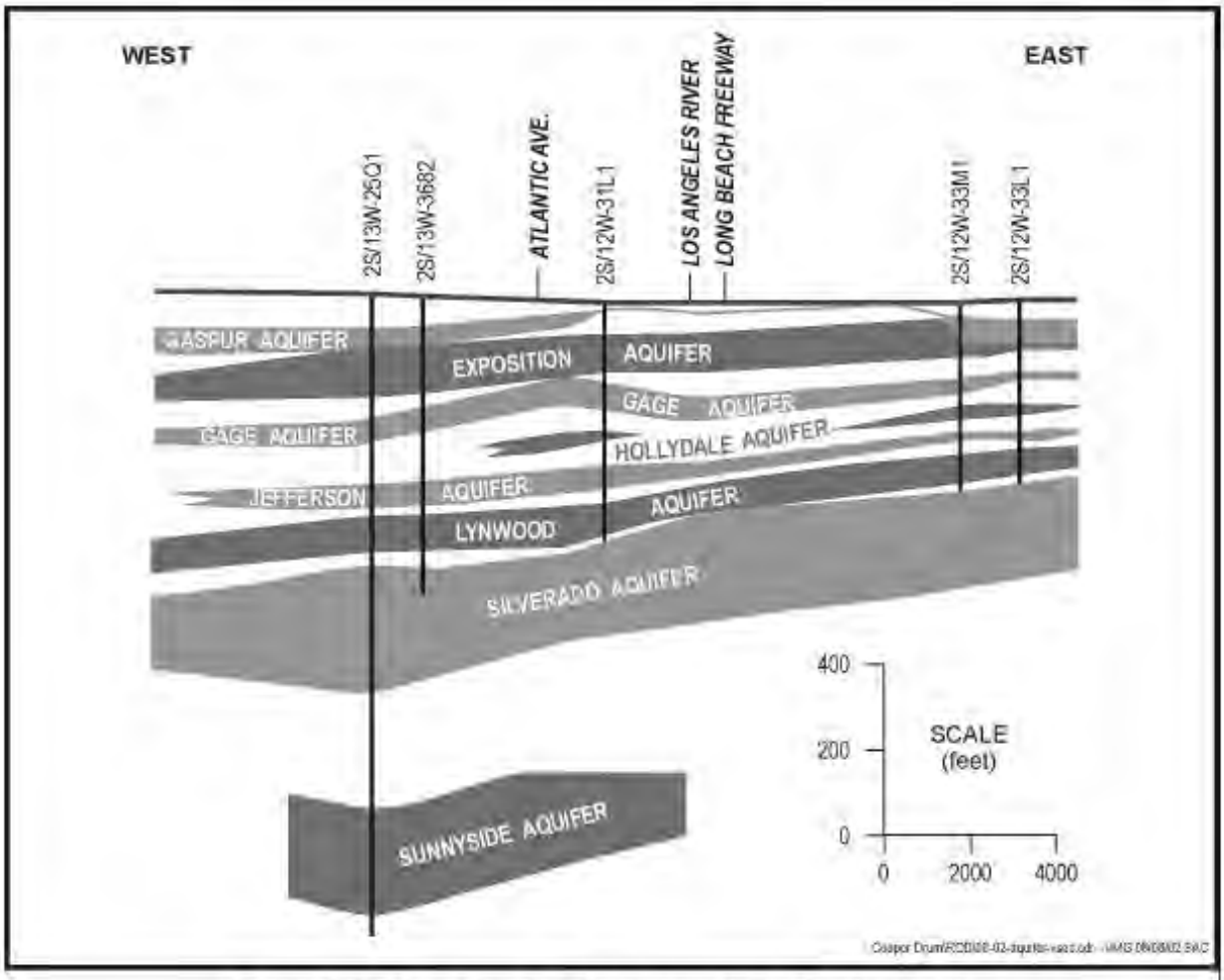

Figure 5-3. Deep Aquifer System and Production Wells

7.0 Summary of Site Risks

EPA completed a Human Health Risk Assessment (HHRA) for Cooper Drum in 2002 (URS, 2002). The HHRA estimates the human health and environmental risks that Cooper Drum could pose if no action were taken. It is one of the factors that EPA considers in deciding whether to take actions at a site. For Cooper Drum, EPA's decision to take action is based principally on the presence of contamination in groundwater at levels that exceed drinking water standards, evidence that contamination will continue to migrate into groundwater areas that are presently clean or less contaminated, and the potential use of groundwater in and around Cooper Drum as a source of drinking water. The risk assessment is also used to identify the contaminants and exposure pathways that need to be addressed by the remedial action. This section of the ROD summarizes the results of the HHRA for Cooper Drum which can be found in the Cooper Drum RI/FS Report, Appendix L (URS, 2002).

7.1 Summary of Human Health Risk Assessment

This summary of health risk includes sections on the identification of contaminants of concern (COCs), the exposure assessment, toxicity assessment, and risk characterization.

7.1.1 Identification of Contaminants of Concern

The COCs driving the need for remedial action (risk drivers) are based on the data collected during the remedial investigation (RI) between 1996 and 2001. Sampling data were available from 11 groundwater wells and 17 soil borings sampled during this period. A total of 11 VOCs detected in the groundwater and soil contributed significantly to the estimated risks and are considered COCs. A total of 10 non-VOCs detected in the soil contributed significantly to the estimated risks and are considered site COCs. The concentrations of COCs found to pose potential threats to human health in the soil and groundwater at Cooper Drum are presented in Tables 7-1a to 7-1d. The tables also identify the exposure point concentrations (EPCs) for soil and groundwater, ranges of concentrations detected for each COC, the detection frequency (i.e., the number of times the chemical was detected in the samples collected at Cooper Drum), and how the EPC was derived. As shown in the tables, TCE and cis-1,2-DCE in groundwater are the most frequently detected COCs at Cooper Drum and have the highest EPCs. Lead in soil is the most frequently detected soil COC and also has the highest EPC. The principal COCs for the groundwater pathway are 1,2,3-trichloropropane, TCE, 1,2-DCA, and vinyl chloride. Other COCs contributing to the overall risk include 1,1-DCA, benzene, 1,2-dichloropropane, and PCE. The principal COC for the soil pathway is benzo(a)pyrene, with the PCB, Aroclor-1260, lead, benzo(b)fluoranthene, and dibenz(a,h)anthracene also contributing.

7.1.2 Exposure Assessment

Exposure refers to the potential contact of an individual (receptor) with a chemical. Exposure assessment is the determination or estimation of the magnitude, frequency, duration, and route of potential exposure. This section briefly summarizes the potentially exposed populations, the

exposure pathways evaluated, and the exposure quantification from the HHRA performed for Cooper Drum.

A complete discussion of all the scenarios and exposure pathways is presented in the Cooper Drum RI/FS Report, Appendix L (URS, 2002) and is summarized in the following discussion and depicted in the Cooper Drum conceptual model (CSM) included as Figure 5-1.

As depicted in the CSM, the following pathways for current and future receptors were considered complete based on the presence of all four pathways and the nature of Cooper Drum, as well as the assumption that pavement, concrete, buildings, and other existing cover could be removed to expose the underlying soil.

- **Ingestion and direct contact with surface soil** (2 feet or less bgs) for on-site occupational workers, and shallow and deeper subsurface soils (0 to 12 feet bgs) for the hypothetical future on-site resident (adult and child) and construction worker;

- **Inhalation of airborne contaminants in outdoor air** (VOCs and particulate matter from subsurface and surface soils) for on- and off-site residents, occupational workers, and on-site construction workers;

- **Inhalation of indoor air contaminants in soil and groundwater** (particulate matter from surface and subsurface soils and VOCs from soils and groundwater) for on- and off-site residents and indoor occupational workers; and

- **Ingestion, dermal contact, and inhalation of groundwater contaminants** for domestic usage (washing, bathing, laundry, etc.) and as a potable drinking water supply for potential on-site and off-site residents (i.e., untreated water supply).

It should be noted that the assumption that residents could be exposed to contaminated groundwater from Cooper Drum is highly conservative. Contamination at Cooper Drum has not affected drinking water sources in the South Gate area. There are currently no wells providing a public drinking water supply from the contaminated shallow aquifer in the area of Cooper Drum. Further, regulations, such as the Safe Drinking Water Act, prohibit water purveyors from serving water contaminated in excess of drinking water standards (MCLs) to consumers.

7.1.3 Toxicity Assessment

Tables 7-1a to 7-1d show the 21 COCs that are the major risk contributors for Cooper Drum. Based on data from USEPA (IRIS), Cal/EPA (OEHHA) and other published data, of the 21 COCs two are classified as human carcinogens (EPA weight-of-evidence Class A), 12 are classified as probable human carcinogens (EPA weight-of-evidence class B2), three are possible human carcinogens, and the remaining four are noncarcinogenic. The carcinogenic oral/dermal and inhalation slope factors for the 17 carcinogenic COCs are presented in Table 7-2.

In addition to their classification as human carcinogens, 12 COCs have toxicity data indicating their potential for adverse noncarcinogenic health effects. The chronic toxicity data available for these

compounds have been used to develop oral and inhalation reference doses (RfDs). The RfD represents a level that an individual may be exposed to that is not expected to cause any deleterious effect. The oral and inhalation RfDs are presented in Table 7-3. For complete information on toxicity of each chemical, see the Cooper Drum RI/FS Report, Appendix L (URS, 2002).

The following hierarchical approach is used to determine toxicity values:

- California Cancer Potency Factors (CPFs) developed by the California Environmental Protection Agency's (Cal/EPA's) Office of Environmental Health Hazard Assessment (OEHHA) (Cal/EPA 2001);
- EPA's Integrated Risk Information System (IRIS) database for toxicity value (i.e., noncarcinogenic RfDs, and carcinogenic SFs) (EPA 2000b);
- Chronic RfDs promulgated into California regulations, or used to develop environmental criteria that are promulgated into regulations; and
- Current edition of EPA's Health Effects Assessment Summary Tables (HEAST) (EPA 1997b).

7.1.4 Risk Characterization

This section presents the results of the evaluation of the potential risks to human health associated with exposure to contaminated soil and groundwater at Cooper Drum.

For carcinogens, risks are generally expressed as the incremental probability of an individual developing cancer over a lifetime as a result of exposure to site-related contaminants. These risks are probabilities that are expressed in scientific notation (e.g., 1e-06). An excess lifetime cancer risk of 1e-06 indicates that an individual has a 1 in 1,000,000 chance of developing cancer as a result of site-related exposure. This is referred to as an "excess lifetime cancer risk" because it would be in addition to the risks of cancer individuals face from other causes. The chance of an individual developing cancer from all other causes has been estimated to be as high as 1 in 3. EPA's generally acceptable risk range for site-related exposures is 1e-04 to 1e-06 (in effect, 1 in 10,000 to 1 in a 1,000,000). An excess lifetime cancer risk greater than 1 in 10,000 (1e-04) is the point at which action is generally required at a site (EPA 1991a).

The potential for noncarcinogenic effects is evaluated by comparing an exposure level, over a specified time period, with a reference dose (RfD), based on an average daily exposure or dose. The ratio of the dose to the RfD is referred to as the hazard quotient (HQ). An HQ less than one indicates that a receptor's dose is less than the RfD and that adverse toxic noncarcinogenic effects from exposure to that chemical are unlikely. The sum of all of the chemical and route-specific HQs is called the hazard index (HI). An HI less than one indicates that noncarcinogenic effects from all the contaminants are unlikely.

Conclusions

Tables 7-4 and 7-5 present the risk characterization summaries for carcinogenic and noncarcinogenic effects, respectively. The risk estimates presented in these tables are based on reasonable maximum exposure (RME) scenarios and were developed by taking into account various conservative assumptions about the frequency and duration of exposure to soil and groundwater, as well as the toxicity of the COCs. The results are summarized in the following paragraphs for the three exposure pathways (groundwater, soil, and indoor air).

The cumulative (soil, groundwater, indoor air) excess carcinogenic risk for the future resident at Cooper Drum is estimated at 3.4e-02 with a non-carcinogenic HI of 193. The groundwater contaminants 1,2,3-TCP, TCE, and 1,2-DCA are the principal risk drivers. TCE, 1,2-DCA, cis-1,2-DCE, and 1,2-DCP are the principal non-carcinogenic COCs driving the elevated HI. The hazards presented by these risk drivers are based on a hypothetical future on-site residential exposure to these COCs through ingestion and inhalation of water from an untreated groundwater supply at Cooper Drum. A response action is generally warranted if the cumulative excess carcinogenic risk to an individual exceeds 1e-04, or the non-carcinogenic HI value is greater than one.

The cumulative excess carcinogenic risk resulting from exposure to soil contaminants for a future resident at Cooper Drum is estimated at 3.4e-04, with an non-carcinogenic HI of 3. The principal carcinogenic risk drivers are benzo(a)pyrene, PCB (Aroclor-1260 and Aroclor-1254), benzo(b)fluoranthene, dibenz(a,h)anthracene, and PCE. The principal non-carcinogenic risk driver is Aroclor 1260. The exposure pathways primarily driving the risks include soil ingestion and dermal contact. In addition, the potential for elevated blood lead levels for the future resident and construction worker were evaluated. The results indicate that exposure to lead from on-site soils could result in elevated blood lead levels above the threshold value of 10 μg/dL.

Chemical-specific standards that define acceptable risk levels are also exceeded in groundwater at Cooper Drum when that groundwater is designated as a potential source of drinking water. Except for 1,2,3-TCP, the California and federal drinking water standards, or maximum contaminant level (MCL), were exceeded by all of the groundwater COCs. An enforceable drinking water standard for 1,2,3-TCP has not been promulgated. Additionally VOCs in soil and soil gas were evaluated using a computer model to estimate contaminant transport through the soil. The model results also indicate that VOCs in soil pose a health threat by leaching to groundwater and exceeding drinking water standards.

<u>Groundwater.</u> The exposure pathways and scenarios driving the health risks are the groundwater pathways (ingestion, inhalation, dermal contact) for the future resident. The carcinogenic risk drivers are 1,2,3-TCP (3e-02), TCE (7e-04), and 1,2-DCA (7e-04). Several other COCs, including VC (6e-04), 1,2-DCP (3e-04), and benzene (3e-04), also contribute to the high risks, but 1,2,3-TCP at concentrations detected in the on-site monitoring wells is the primary COC. Most of the risk is attributed to exposure through the inhalation (3e-02) and ingestion route (6e-03).

The noncarcinogenic risk drivers for the residential child are TCE (HI = 48), cis-1,2-DCE (HI = 45), 1,2-DCA (HI = 21), and 1,2-DCP (HI = 16). Ingestion and inhalation contribute almost equally to the estimated HI value resulting in respective route-specific HI values of 62 and 123.

Soil Pathway. Although several orders of magnitude below groundwater health risks, exposure to soil COCs constitute high risks. The estimated total excess lifetime cancer risks for the hypothetical on-site resident exposed to COCs in on-site soils is 3.3e-04. The principal risk driver is benzo(a)pyrene (1e-04), along with Aroclor-1260 (6e-05), benzo(b)fluoranthene (2e-05), dibenz(a,h)anthracene (2e-05), Aroclor-1254 (2e-05), and PCE (1e-05). The exposure pathways primarily driving the need for action include soil ingestion (2e-04) and dermal contact (8e-05).

The estimated potential health hazard HI for the future on-site residential child exposed to the soil COCs is 3.0. The potential health hazard is primarily attributed to soil ingestion of PCB, Aroclor-1254, (HI = 2). Also, exposure to lead concentrations of 1,920 to 3,240 mg/kg detected in subsurface and surface soils could result in elevated blood lead levels above the threshold level of 10 μg/dl, thereby posing a potential health risk to both the future resident and construction worker.

Indoor Air Pathway. The indoor air risks for the hypothetical resident and indoor occupational worker were based on actual soil, soil gas, and groundwater data, with the indoor air EPCs estimated using the Johnson and Ettinger model for subsurface vapor intrusion into buildings. The risks for the hypothetical residential receptor constitute high risks approaching one in one thousand (1e-03), primarily as a result of exposure to 1,2,3-TCP (6.1e-04), PCE (3.1e-04), and vinyl chloride (5e-05). For the indoor occupational worker, the risks were nearly as high at 2e-04, again due primarily as a result of exposure to 1,2,3-TCP (1e-04), PCE (7e-05), and VC (1e-05).

For the future residents, the cumulative exposure to multiple airborne VOCs estimated an HI value of 3.5, which indicates a potential for adverse health effects. However, no individual COC exceeds an HQ value of 1. For the indoor occupational worker, there is not an indication of potential for adverse health effects based on a HI value of 0.6.

7.1.5 Uncertainty Analysis

There are inherent uncertainties in the risk evaluation that generally overestimate but can also underestimate the potential human health risks at Cooper Drum. The most common uncertainties related to toxicity information includes using: 1) dose-response information from animal studies to predict effects in humans; and 2) dose-response information for effects observed at elevated doses to predict adverse effects following exposure at low levels.

The oral RfDs and slope factors (SFs) were used to determine risks for dermal exposure. These toxicity values are generally based on an administered dose which is not directly comparable to absorbed doses through the skin, or for target organs other than the skin. Consequently, health risks or adverse effects identified through this exposure route are estimated and should be viewed with a moderate to high degree of uncertainty.

Other uncertainties include the 1) use of conservative and health-protective exposure factors; 2) the maximum or 95% UCL concentrations used for EPCs are likely to overestimate the overall chemical concentrations throughout Cooper Drum; and 3) assumption that contaminated groundwater in the shallow water-bearing zone underlying Cooper Drum would be used as an untreated source of potable drinking water.

7.2 Summary of Ecological Risk Assessment

A scoping-level ecological risk assessment was conducted to assess the potential for the existence of ecological receptors and pathways between those receptors and chemicals of potential ecological concern (COPECs) associated with Cooper Drum. This ecological scoping assessment was conducted in conformance with the DTSC guidance and was designed to assess the need for a follow-up screening-level ecological risk assessment. The results of those activities are discussed in detail in the Cooper Drum RI/FS Report (URS, 2002).

EPA's evaluation of potential risks to ecological receptors indicates that there is virtually no habitat present for birds or mammals at Cooper Drum. There is also no available habitat for vegetation due to the industrial nature of the site. Consequently, the potential for ecological receptors to be exposed to soil contaminants would be considered extremely minimal, and there is no need for any additional screening-level ecological risk assessment.

7.3 Risk Assessment Conclusion

The principal COCs for the groundwater pathway are 1,2,3-trichloropropane, TCE, and 1,2-DCA. Other COCs contributing to the overall groundwater risk include benzene, 1,1-DCA, cis-1,2-DCE, 1,2-dichloropropane, PCE, and vinyl chloride. Exposure to COCs detected in groundwater poses the greatest health risk to potential receptors. However, exposure to chemicals in groundwater presupposes that wells would be constructed to access the shallow water-bearing zone underneath Cooper Drum, and that the water would be used as an untreated water supply for domestic use.

The principal cancer risk driver for the soil pathway is benzo(a)pyrene, along with the PCB, Aroclor-1260, lead, benzo(b)fluoranthene, and dibenz(a,h)anthracene. The estimated total RME cancer risks for the future on-site resident and worker exposed to COCs in on-site soils are 3 in 10,000 (3.3e-04) and 7 in 100,000 (6.7e-05), respectively. Exposure to chemicals in soil presupposes the existing cover of asphalt concrete (95% of the site) would be removed and contact with soil would be possible.

Exposure to site COCs in indoor air, by on- or off-site workers and residents, represents the most likely exposure pathway evaluated in the HHRA. The estimated total RME cancer risks for the future on-site resident and on-site worker are 9.9e-04 and 2.3e-04, respectively. Exposure to chemicals in indoor air presupposes the asphalt concrete would be removed and buildings would be built on Cooper Drum. Currently, the only enclosed office area is on the west side of Cooper Drum away from the VOC hot spot.

The response action selected in this Record of Decision (ROD) is necessary to protect the public health or welfare or the environment from actual or threatened releases of hazardous substances, pollutants or contaminants from the Cooper Drum site which may present an imminent and substantial endangerment to public health or welfare.

Table 7-1a
Summary of Contaminants of Concern and
Medium-Specific Exposure Point Concentrations (Soil 0-2 feet)

Scenario Timeframe: Current
Medium: Soil
Exposure Medium: Soil

Exposure Point	Contaminants of Concern	Concentration Detected (mg/kg)		Frequency of Detection	Exposure Point Concentration (mg/kg)	Statistical Measure
		Min	Max			
Soil (0 - 2 ft bgs) On-site Direct Contact	Benzo(a)anthracene	1.1	2.7	3/13	2.7	Max
	Benzo(a)pyrene	0.78	4.3	3/13	4.3	Max
	Benzo(b)fluoranthene	0.69	6.6	3/13	6.6	Max
	Benzo(k)fluoranthene	0.98	4.6	3/13	4.6	Max
	Dibenz(a,h)anthracene	0.15	1.1	3/13	1.1	Max
	Indeno(1,2,3-cd)pyrene	0.3	2.1	4/13	2.1	Max
	Aroclor-1254	0.0049	1.4	6/14	1.4	Max
	Aroclor-1260	0.0018	5.5	6/14	5.5	Max
	Lead	2.2	3,240	11/12	3,240	Max*
	Tetrachloroethene (PCE)	0.001	0.2	9/16	0.122	95% UCL

*	Maximum concentration used because data do not fit either normal or lognormal distribution.
Min	minimum detected concentration
Max	maximum detected concentration
95% UCL	95% Upper Confidence Limit
mg/kg	milligrams per kilogram
bgs	below ground surface

Table 7-1b
Summary of Contaminants of Concern and
Medium-Specific Exposure Point Concentrations (Soil 0-12 feet)

Scenario Timeframe: Future
Medium: Soil
Exposure Medium: Soil

Exposure Point	Contaminants of Concern	Concentration Detected (mg/kg)		Frequency of Detection	Exposure Point Concentration (mg/kg)	Statistical Measure
		Min	Max			
Soil (0 - 12 ft. bgs) On-site Direct Contact	Benzo(a) anthracene	1.1	2.7	3/47	2.7	Max
	Benzo(a)pyrene	0.12	4.3	4/47	4.3	Max
	Benzo(b)fluoranthene	0.097	6.6	4/47	6.6	Max
	Benzo(k)fluoranthene	0.98	4.6	3/47	4.6	Max
	Chyrsene	0.12	4.7	4/47	4.7	Max
	Dibenz(a,h)anthracene	0.15	1.1	3/47	1.1	Max
	PCB Aroclor-1254	0.0049	2.1	12/47	2.1	Max
	PCB Aroclor-1260	0.0018	5.5	9/47	5.5	Max
	Lead	2.2	3,240	39/40	3,240	Max*
	Lead (without hot spot)	2.2	1,920	38/39	1,920	Max*
	Tetrachloroethene (PCE)	0.001	8.2	19/53	8.2	Max

Min minimum detected concentration
Max maximum detected concentration
bgs below ground surface
* Maximum concentration used because data do not fit either normal or lognormal distribution.

Table 7-1c
Summary of Contaminants of Concern and Medium-Specific Exposure Point Concentrations (Groundwater)

Scenario Timeframe: Future
Medium: Groundwater
Exposure Medium: Groundwater

Exposure Point	Contaminants of Concern	Concentration Detected (µg/L)		Frequency of Detection	Exposure Point Concentration (µg/L)	Statistical Measure
		Min	Max			
	Benzene	0.5	30	24/30	30	Max
	1,1-Dichloroethane (1,1-DCA)	0.5	340	26/30	340	Max
	1,1-Dichloroethene (1,1-DCE)	0.5	54	27/30	48	95% UCL
	1,2-Dichloroethane (1,2-DCA)	0.4	100	27/30	90.2	95% UCL
	cis-1,2-Dichloroethene (c-1,2-DCE)	0.5	1,200	28/30	1,150	95% UCL
	trans-1,2-Dichloroethene (t-1,2-DCE)	0.5	46	27/30	46	Max
	1,2-Dichloropropane (1,2-DCP)	0.3	50	24/30	43.9	95% UCL
	Tetrachloroethene (PCE)	0.5	57	15/30	52.9	95% UCL
	Trichloroethene (TCE)	0.5	800	28/30	755	95% UCL
	1,2,3-Trichloropropane (TCP)	1	50	20/23	45	95% UCL
	Vinyl chloride	0.5	15	25/30	13.2	95% UCL

Min minimum detected concentration
µg/L microgram per liter
Max maximum detected concentration
95% UCL 95% Upper Confidence Limit

Table 7-1d
Summary of Contaminants of Concern and
Medium-Specific Exposure Point Concentrations (Indoor Air)

Scenario Timeframe: Future
Media: Soil, groundwater, and soil gas
Exposure Medium: Indoor air

Exposure Point	Contaminants of Concern	Concentration Detected* ($\mu g/m^3$)		Frequency of Detection	Exposure Point Concentration** ($\mu g/m^3$)	Statistical Measure**
		Min	Max			
Indoor Air	Benzene	0.0023	0.0203	N/A	0.359	N/A
	1,4-Dichlorobenzene***	0.000289	0.1	N/A	0.565	N/A
	1,1-Dichloroethane (1,1-DCA)	0.338	2.90	N/A	4.93	N/A
	cis-1,2-Dichlorethene (c-1,2-DCE)	0.573	17	N/A	23.5	N/A
	1,2-Dichloropropane (1,2-DCP)	0.0154	0.232	N/A	0.316	N/A
	Tetrachloroethene (PCE)	0.155	119	N/A	120	N/A
	Trichloroethene (TCE)	0.966	4.57	N/A	6.49	N/A
	1,2,3-Trichloropropane (TCP) ****	0.253	0.468	N/A	0.697	N/A
	Vinyl chloride	0.0847	1.51	N/A	1.59	N/A

* Concentrations were developed from soil and groundwater concentrations using the Johnson and Ettinger Model. (USEPA 2000).
** Total concentration from all media.
*** A surrogate, 1,2-Dichlorobenzene was used to estimate indoor air concentrations.
**** A surrogate, 1,1-Dichloroethene was used to estimate indoor air concentrations.
Min minimum detected concentration
Max maximum detected concentration
N/A Not available or applicable
$\mu g/m^3$ microgram per cubic meter

Table 7-2
Cancer Toxicity Data Summary
(Page 1 of 2)

Pathway: Ingestion, Dermal

Contaminants of Concern	Oral/Dermal Cancer Slope Factor $(mg/kg\text{-}day)^{-1}$	Weight of Evidence Classification	Source	Date (MM/DD/YYYY)
Benzene	0.1	A	Ca	05/01/2002
1,1-Dichloroethane (1,1-DCA)	0.0057	C	Ca	05/01/2002
1,2-Dichloroethane (1,2-DCA)	0.091	B2	i	01/01/1991
1,2-Dichloropropane (1,2-DCP)	0.068	C	h	10/01/1999
Tetrachloroethene (PCE)	0.052	B2	n	10/01/1999
Trichloroethene (TCE)	0.0153	B2	Ca	05/01/2002
1,2,3-Trichloropropane (TCP)	7	C	h	10/01/1999
Vinyl chloride	1.55	A	i	08/07/200
Benzo(a) anthracene	1.2	B2	Ca	05/01/2002
Benzo(a)pyrene	12	B2	Ca	05/01/2002
Benzo(b) fluoranthene	1.2	B2	Ca	05/01/2002
Benzo(k)fluoranthene	1.2	B2	Ca	05/01/2002
Chrysene	0.12	B2	Ca	05/01/2002
Dibenz(a,h)anthracene	7.3	B2	Ca	05/01/2002
Indeno (1,2,3-cd) pyrene	1.2	B2	Ca	05/01/2002
Aroclor-1254	5	B2	Ca	05/01/2002
Aroclor-1260	5	B2	Ca	05/01/2002

Ca Cal/EPA Cancer Potency Factor (CPF) value, Office of Environmental Health Hazard Assessment (OEHHA) (Cal/EPA)
h Health Effect Assessment Summary Tables (HEAST) - from USEPA Region 9 PRG Table (USEPA 2000)
i Integrated Risk Information System (IRIS) (USEPA 2001)
r route-to-route extrapolation - from USEPA Region 9 PRG Table (USEPA 2000)
n National Cancer for Environmental Assessment (NCEA) - from USEPA Region 9 PRG Table (USEPA 2000)
N/A Not available or applicable
A Human carcinogen
B2 Probably human carcinogen - Indicates sufficient evidence in animals and inadequate or no evidence in humans
C Possible human carcinogen

Table 7-2
Cancer Toxicity Data Summary
(Page 2 of 2)

Pathway: Inhalation

Contaminants of Concern	Unit Risk ($\mu g/m^3$)	Inhalation Cancer Slope Factor $(mg/kg\text{-}day)^{-1}$	Weight of Evidence/ Cancer Guideline Description	Source	Date (MM/DD/YYYY)
Benzene	2.9e-05	0.1	A	Ca	10/01/1999
1,1-Dichloroethane (1,1-DCA)	1.6e-06	0.0057	C	Ca	05/01/2002
1,2-Dichloroethane (1,2-DCA)	2.2e-05	0.091	B2	i	01/01/1991
1,2-Dichloropropane (1,2-DCP)	1.8e-05	0.068	--	r	10/01/1999
Tetrachloroethene (PCE)	5.9e-06	0.0210	B2	Ca	05/01/2002
Trichloroethene (TCE)	2.0e-06	0.01	B2	Ca	05/01/2002
1,2,3-Trichloropropane (TCP)	N/A	7	C	r	10/01/1999
Vinyl chloride	7.8e-05	0.27	A	Ca	05/01/2002
Benzo(a)anthracene	1.1e-04	0.39	B2	Ca	05/01/2002
Benzo(a)pyrene	1.1e-03	3.9	B2	Ca	05/01/2002
Benzo(b) fluoranthene	1.1e-04	0.39	B2	Ca	05/01/2002
Benzo(k)fluoranthene	1.1e-04	0.39	B2	Ca	05/01/2002
Chrysene	1.1e-05	0.039	B2	Ca	05/01/2002
Dibenz(a,h)anthracene	1.2e-03	4.1	B2	Ca	05/01/2002
Indeno (1,2,3-cd) pyrene	1.1e-04	0.39	B2	Ca	05/01/2002
Aroclor-1254	5.7e-04	2.00	B2	Ca	05/01/2002
Aroclor-1260	5.7e-04	2.00	B2	Ca	05/01/2002

Ca Cal/EPA Cancer Potency Factor (CPF) value, Office of Environmental Health Hazard Assessment (OEHHA) (Cal/EPA)
h Health Effect Assessment Summary Tables (HEAST) - from USEPA Region 9 PRG Table (USEPA 2000)
i Integrated Risk Information System (IRIS) (USEPA 2001)
r route-to-route extrapolation - from USEPA Region 9 PRG Table (USEPA 2000)
n National Cancer for Environmental Assessment (NCEA) - from USEPA Region 9 PRG Table (USEPA 2000)
N/A Not available or applicable
A Human carcinogen
B2 Probably human carcinogen - Indicates sufficient evidence in animals and inadequate or no evidence in humans
C Possible human carcinogen

Table 7-3
Non-Cancer Toxicity Date Summary
(Page 1 of 2)

Pathway: **Ingestion, Dermal**

Contaminants of Concern	Chronic/ Subchronic	Oral/Dermal RfD Value (mg/kg-day)	Primary Target Organ	Source	Dates of RfD: Target Organ (MM/DD/YYYY)
Benzene	Chronic	0.1	blood	h	10/01/1999
1,1-Dichloroethane (1,1-DCA)	Chronic	0.1	kidney	h	10/01/1999
1,2-Dichloroethane (1,2-DCA)	Chronic	0.0014	kidney	n	10/01/1999
1,1-Dichloroethene (1,1-DCE)	Chronic	0.057	liver	i	08/13/2002
1,2-Dichloropropane (1,2-DCP)	Chronic	0.0011	nasal mucous	r	10/01/1999
cis-1,2-Dichloroethene (cis-1,2-DCE)	Chronic	0.001	blood	h	10/01/1999
trans-1,2-Dichloroethene (trans-1,2-DCE)	Chronic	0.001	blood	i	01/01/1989
Tetrachloroethene (PCE)	Chronic	0.11	liver	i	03/01/1998
Trichloroethene (TCE)	Chronic	0.006	liver	x	10/01/1999
1,2,3-Trichloropropane (TCP)	Chronic	0.005	body mass	i	08/01/1990
Vinyl chloride	Chronic	0.029	liver	i	08/07/2000
Aroclor-1254	Chronic	2.0e-05	immune system	i	11/01/1996

N/A Not available; chemical is non-carcinogenic or toxicity values not established.
h Health Effect Assessment Summary Tables (HEAST) - from USEPA Region 9 PRG Table
i Integrated Risk Information System (IRIS) - USEPA 2001
r route-to-route extrapolation - from USEPA Region 9 PRG Table
n National Center for Environmental Assessment (NCEA) - from USEPA Region 9 PRG Table
x Value currently under review - from USEPA Region 9 PRG Table

Table 7-3
Non-Cancer Toxicity Date Summary
(Page 2 of 2)

Pathway: Inhalation

Contaminants of Concern	Chronic/ Subchronic	Inhalation RfD (mg/kg-day)	Primary Target Organ	Source	Dates of RfD: Target Organ (MM/DD/YYYY)
Benzene	Chronic	0.0017	blood	r	10/01/1999
1,1-Dichloroethane (1,1-DCA)	Chronic	0.14	kidney	h	10/01/1999
1,2-Dichloroethane (1,2-DCA)	Chronic	0.0014	lungs	n	10/01/1999
1,1-Dichloroethene (1,1-DCE)	Chronic	0.057	liver	i	08/13/2002
1,2-Dichloropropane (1,2-DCP)	Chronic	0.0011	nasal mucous, blood	i	12/01/1991
cis-1,2-Dichloroethene (cis-1,2-DCE)	Chronic	0.001	blood	r	10/01/1999
trans-1,2-Dichloroethene (trans-1,2-DCE)	Chronic	0.002	immune system, blood	r	10/01/1999
Tetrachloroethene (PCE)	Chronic	0.11	liver	n	10/01/1999
Trichloroethene (TCE)	Chronic	0.006		r	10/01/1999
1,2,3-Trichloropropane (TCP)	Chronic	0.005	body mass	r	10/01/1999
Vinyl chloride	Chronic	0.029	liver	i	08/07/2000
Aroclor-1254	Chronic	2.00e-05	immune system	r	10/01/1999

N/A Not available; chemical is non-carcinogenic or toxicity values not established.
h Health Effect Assessment Summary Tables (HEAST) - from USEPA Region 9 PRG Table
i Integrated Risk Information System (IRIS) - USEPA 2001
r route-to-route extrapolation - from USEPA Region 9 PRG Table
n National Center for Environmental Assessment (NCEA) - from USEPA Region 9 PRG Table
x Value currently under review - from USEPA Region 9 PRG Table

Table 7-4a
Risk Characterization Summary - Carcinogens (Worker)
(Page 1 of 2)

Scenario Timeframe: Current
Receptor Population: On-site Worker
Receptor Age: Adult

Medium	Exposure Medium	Exposure Point	Contaminants of Concern	Carcinogenic Risk			
				Ingestion	Inhalation	Dermal	Total
Soil	Soil	On-site-Direct Contact	Benzo(a)anthracene	5.7e-07	1.3e-12	9.7e-07	1.5e-06
		On-site-Direct Contact	Benzo(a) pyrene	9.0e-06	2.1e-11	1.5e-05	2.4e-05
		On-site-Direct Contact	Benzo(b) fluoranthene	1.4e-06	3.3e-12	2.4e-06	3.8e-06
		On-site-Direct Contact	Benzo(k) fluoranthene	9.7e-07	2.3e-12	1.7e-06	2.7e-06
		On-site-Direct Contact	Dibenz(a,h) anthracene	1.4e-06	5.7e-12	2.4e-06	3.8e-06
		On-site-Direct Contact	Indeno(1,2,3-cd)pyrene	4.4e-07	1.2e-12	7.6e-07	1.2e-06
		On-site-Direct Contact	Aroclor-1254	1.2e-06	3.6e-12	2.4e-06	3.6e-06
		On-site-Direct Contact	Aroclor-1260	4.8e-06	1.4e-11	9.5e-06	1.4e-05
		On-site-Direct Contact	Tetrachloroethene (PCE)	1.1e-09	5.6e-06	1.5e-09	5.6e-06
						Soil Risk Total =	6.7e-05

Table 7-4a
Risk Characterization Summary - Carcinogens (Worker)
(Page 2 of 2)

Scenario Timeframe: Current
Receptor Population: On-site Worker
Receptor Age: Adult

Medium	Exposure Medium	Exposure Point	Contaminants of Concern	Carcinogenic Risk			
				Ingestion	Inhalation	Dermal	Total
Soil, Ground water, Soil Gas	Indoor Vapors (VOCs)	Inhalation of Indoor Air	Benzene	N/A	1.0e-06	N/A	1.0e-06
		Inhalation of Indoor Air	1,4-Dichlorobenzene	N/A	6.4e-07	N/A	6.4e-07
		Inhalation of Indoor Air	Tetrachloroethene (PCE)	N/A	7.2e-05	N/A	7.2e-05
		Inhalation of Indoor Air	Trichloroethene (TCE)	N/A	1.8e-06	N/A	1.8e-06
		Inhalation of Indoor Air	1,2,3-Trichloropropane (TCP)	N/A	1.4e-04	N/A	1.4e-04
		Inhalation of Indoor Air	Vinyl Chloride	N/A	1.2e-05	N/A	1.2e-05
						Air Risk Total =	2.3e-04
						Total Risk =	2.9e-04

N/A route of exposure is not applicable to this medium
VOCs volatile organic compounds

Table 7-4b
Risk Characterization Summary - Carcinogens (Resident)
(Page 1 of 3)

Scenario Timeframe: Future
Receptor Population: Resident
Receptor Age: Adult/child

Medium	Exposure Medium	Exposure Point	Contaminants of Concern	Carcinogenic Risk			
				Ingestion	Inhalation	Dermal	Exposure Routes Total
Soil	Soil	Soil On-site Direct Contact	Benzo(a) anthracene	5.1e-06	2.9e-12	2.1e-06	7.1e-06
		Soil On-site Direct Contact	Benzo(a) pyrene	8.1e-05	4.6e-11	3.3e-05	1.1e-04
		Soil On-site Direct Contact	Benzo(b) fluoranthene	1.2e-05	7.0e-12	5.1e-06	1.7e-05
		Soil On-site Direct Contact	Benzo(k) fluoranthene	8.6e-06	4.9e-12	3.6e-06	1.2e-05
		Soil On-site Direct Contact	Chrysene	8.8e-07	1.5e-08	3.6e-07	1.3e-06
		Soil On-site Direct Contact	Dibenz(a,h) anthracene	1.3e-05	1.2e-11	5.2e-06	1.8e-05
		Soil On-site Direct Contact	Aroclor-1254	1.6e-05	7.6e-12	7.8e-06	2.4e-05
		Soil On-site Direct Contact	Aroclor-1260	4.3e-05	3.0e-11	2.0e-05	6.3e-05
		Soil On-site Direct Contact	Dieldrin	1.0e-06	1.4e-12	3.2e-07	1.3e-06
		Soil On-site Direct Contact	Tetrachloroethene (PCE)	6.7e-07	1.2e-05	2.1e-07	1.3e-05
						Soil Risk Total =	3.3e-04

Table 7-4b
Risk Characterization Summary - Carcinogens (Resident)
(Page 2 of 3)

Scenario Timeframe: Future
Receptor Population: Resident
Receptor Age: Adult/child

Medium	Exposure Medium	Exposure Point	Contaminants of Concern	Carcinogenic Risk			
				Ingestion	Inhalation	Dermal	Exposure Routes Total
Ground water	Groundwater	Gaspur Aquifer - Tap Water	Benzene	4.5e-05	2.2e-04	2.4e-06	2.7e-04
		Gaspur Aquifer - Tap Water	1,1-Dichloroethane (1,1-DCA)	2.9e-05	1.5e-04	6.7e-07	1.8e-04
		Gaspur Aquifer - Tap Water	1,2,3-trichloropropane	4.7e-03	2.4e-02	6.1e-05	2.9e-02
		Gaspur Aquifer - Tap Water	1,2-Dichloroethane (1,2-DCA)	1.2e-04	6.1e-04	1.7e-06	7.3e-04
		Gaspur Aquifer - Tap Water	1,2-Dichloropropane (1,2-DCP)	4.5e-05	2.2e-04	1.2e-06	2.7e-04
		Gaspur Aquifer - Tap Water	Tetrachloroethene (PCE)	4.1e-05	8.3e-05	5.1e-06	1.3e-04
		Gaspur Aquifer - Tap Water	Trichloroethene (TCE)	1.7e-04	5.6e-04	7.2e-06	7.4e-04
		Gaspur Aquifer - Tap Water	Vinyl chloride	3.1e-04	2.7e-04	5.8e-06	5.9e-04
						Groundwater Risk Total =	3.2e-02

Table 7-4b
Risk Characterization Summary - Carcinogens (Resident)
(Page 3 of 3)

Scenario Timeframe: Future
Receptor Population: Resident
Receptor Age: Adult/child

Medium	Exposure Medium	Exposure Point	Contaminants of Concern	Carcinogenic Risk			
				Ingestion	Inhalation	Dermal	Exposure Routes Total
Soil, Ground water, soil gas	Indoor Air	Inhalation of Indoor Air	Benzene	N/A	4.4e-06	N/A	4.4e-06
		Inhalation of Indoor Air	1,4-Dichlorobenzene	N/A	2.8e-06	N/A	2.8e-06
		Inhalation of Indoor Air	1,1-Dichloroethane (1,1-DCA)	N/A	3.5e-06	N/A	3.5e-06
		Inhalation of Indoor Air	1,2-Dichloropropane (1,2-DCP)	N/A	2.7e-06	N/A	2.7e-06
		Inhalation of Indoor Air	Tetrachloroethene (PCE)	N/A	3.1e-04	N/A	3.1e-04
		Inhalation of Indoor Air	Trichloroethene (TCE)	N/A	8.0e-06	N/A	8.0e-06
		Inhalation of Indoor Air	1,2,3-Trichloropropane	N/A	6.1e-04	N/A	6.1e-04
		Inhalation of Indoor Air	Vinyl Chloride	N/A	5.3e-05	N/A	5.3e-05
						Indoor Air Risk Total =	9.9e-04
						Total Risk (soil, groundwater, indoor air) =	3.4e-02

N/A Route of exposure is not applicable to this medium
NC Non-carcinogenic (USEPA Class D or E)

Table 7-5a
Risk Characterization Summary - Non-Carcinogens (Worker)
(Page 1 of 1)

Scenario Timeframe: Current
Receptor Population: Worker
Receptor Age: Adult

Medium	Exposure Medium	Exposure Point	Contaminants of Concern	Primary Target Organ	Non-Carcinogenic Hazard Quotient (HQ)			
					Ingestion	Inhalation	Dermal	Exposure Routes Total
Soil	Soil	Soil On-Site Direct Contact	Aroclor-1254	immune system	3.4e-02	2.5e-07	6.8e-02	1.0e-01
		Soil On-Site Direct Contact	Tetrachloroethene (PCE)	liver (hepa toxicity)	6.0e-06	6.8e-03	7.9e-06	6.8e-03
							Soil HI Total =	0.3
Soil, Ground water, soil gas	Indoor Air	Inhalation of Indoor Air	Benzene	blood	N/A	0.02	N/A	0.02
		Inhalation of Indoor Air	1,4-Dichlorobenzene	liver	N/A	2.0e-04	N/A	2.0e-04
		Inhalation of Indoor Air	1,1-Dichloroethane (1,1-DCA)	kidney	N/A	2.8e-03	N/A	2.8e-03
		Inhalation of Indoor Air	cis-1,2-Dichloroethene (c-1,2-DCE)	blood	N/A	0.2	N/A	0.2
		Inhalation of Indoor Air	1,2-Dichloropropane (1,2-DCP)	nasal mucous	N/A	0.02	N/A	0.02
		Inhalation of Indoor Air	Tetrachloroethene (PCE)	liver	N/A	0.1	N/A	0.1
		Inhalation of Indoor Air	Trichloroethene (TCE)	liver	N/A	0.1	N/A	0.1
		Inhalation of Indoor Air	1,2,3-Trichloropropane	Body mass	N/A	0.01	N/A	0.01
		Inhalation of Indoor Air	Vinyl Chloride	liver	N/A	4.4e-03	N/A	4.4e-03
							Indoor Air HI Total =	0.6
							Total HI (soil, indoor air) =	0.9

N/A Route of exposure is not applicable to this medium

Table 7-5b
Risk Characterization Summary - Non-Carcinogens (Resident)
(Page 1 of 3)

Scenario Timeframe: Future
Receptor Population: Resident
Receptor Age: Child

Medium	Exposure Medium	Exposure Point	Contaminants of Concern	Primary Target Organ	Non-Carcinogenic Hazard Quotient (HQ)			
					Ingestion	Inhalation	Dermal	Exposure Routes Total
Soil	Soil and airborne particulate matter and vapors (VOCs)	Soil On-site Direct Contact, Inhalation	Aroclor-1254	immune system	1.3e+00	8.1e-07	5.6e-01	1.9e+00
		Soil On-site Direct Contact, Inhalation	Dieldrin	liver	1.1e-02	7.2e-09	2.9e-03	1.3e-02
		Soil On-site Direct Contact, Inhalation	Lead	CNS	99th percentile blood lead levels = 36.0 µg/dL (adult) and 127.3 µg/dL (child)			
		Soil On-site Direct Contact, Inhalation	Lead (without hot sport)	CNS	99th percentile blood lead levels = 22.7 µg/dL (adult) and 77.3 µg/dL (child)			
		Soil On-site Direct Contact, Inhalation	Tetrachloro ethene (PCE)	liver	1.1e-02	2.2e-02	2.9e-03	3.5e-02
							Soil HI Total =	3.0

Table 7-5b
Risk Characterization Summary - Non-Carcinogens (Resident)
(Page 2 of 3)

Scenario Timeframe: Future
Receptor Population: Resident
Receptor Age: Child

Medium	Exposure Medium	Exposure Point	Contaminants of Concern	Primary Target Organ	Non-Carcinogenic Hazard Quotient (HQ)			
					Ingestion	Inhalation	Dermal	Exposure Routes Total
Ground Water	Ground Water	Gaspur Aquifer - Tap Water	Benzene	blood	6.4e-01	5.6e+00	2.9e-02	6.3e+00
		Gaspur Aquifer - Tap Water	1,1-Dichloro-ethane (1,1-DCA)	kidney	2.2e-01	7.8e-01	4.2e-03	1.0e+00
		Gaspur Aquifer - Tap Water	1,1-Dichloro-ethene (1,1-DCE)	liver	6.1e-02	2.7e-01	2.1e-03	3.3e-01
		Gaspur Aquifer - Tap Water	1,2,3-trichloro-propane (TCP)	blood	4.8e-01	2.9e+00	5.1e-03	3.4e+00
		Gaspur Aquifer - Tap Water	1,2-Dichloro-ethane (1,2-DCA)	lungs	1.9e-01	2.1e+01	2.2e-03	2.1e+01
		Gaspur Aquifer - Tap Water	1,2-Dichloro-propane (1,2-DCP)	olfactory (nasal) epitheliu m, blood	2.6e+00	1.3e+01	5.4e-02	1.6e+01
		Gaspur Aquifer - Tap Water	cis-1,2-Dichloro-ethene (c-1,2-DCE)	decreased hemato-crit and hemo-globin	7.4e+00	3.7e+01	1.6e-01	4.5e+01
		Gaspur Aquifer - Tap Water	Tetrachloro-ethene (PCE)	liver	3.4e-01	1.5e-01	3.5e-02	5.3e-01
		Gaspur Aquifer - Tap Water	trans-1,2-Dichloroethene (t-1,2-DCE)	immune system, spleen, blood	1.5e-01	7.3e-01	3.1e-03	8.8e-01
		Gaspur Aquifer - Tap Water	Trichloroethene (TCE)	liver	8.0e+00	4.0e+01	2.7e-01	4.8e+01
		Gaspur Aquifer - Tap Water	Vinyl chloride	liver	2.8e-01	1.5e-01	4.4e-03	4.3e-01
							Groundwater HI Total =	186

Table 7-5b
Risk Characterization Summary - Non-Carcinogens (Resident)
(Page 3 of 3)

Scenario Timeframe: Future
Receptor Population: Resident
Receptor Age: Child

Medium	Exposure Medium	Exposure Point	Contaminants of Concern	Primary Target Organ	Non-Carcinogenic Hazard Quotient (HQ)			
					Ingestion	Inhalation	Dermal	Exposure Routes Total
Soil and Ground water	Indoor Air	Inhalation of Indoor Air	Benzene	hemato-poietic effects	N/A	1.0e-01	N/A	1.0e-01
		Inhalation of Indoor Air	1,4-Dichlorobenzene	liver	N/A	1.2e-03	N/A	1.2e-03
		Inhalation of Indoor Air	1,1-Dichloroethane (1,1-DCA)	kidney	N/A	1.7e-02	N/A	1.7e-02
		Inhalation of Indoor Air	1,2-Dichloropropane (1,2-DCP)	olfactory epitheliu m, blood	N/A	1.4e-01	N/A	1.4e-01
		Inhalation of Indoor Air	Tetrachloroethene (PCE)	liver	N/A	5.3e-01	N/A	5.3e-01
		Inhalation of Indoor Air	Trichloroethene (TCE)	liver	N/A	5.3e-01	N/A	5.3e-01
		Inhalation of Indoor Air	1,2,3-Trichloropropane	blood	N/A	6.8e-02	N/A	6.8e-02
		Inhalation of Indoor Air	Vinyl chloride	liver	N/A	2.7e-02	N/A	2.7e-02
							Air HI Total =	3.5
							Total HI (soil, groundwater, indoor air) =	192.5

N/A route of exposure is not applicable to this medium
CNS central nervous system

8.0 Remedial Action Objectives

The remedial action objectives (RAOs) for Cooper Drum are to protect human health and the environment from exposure to contaminated soil, groundwater, and indoor air, and to restore the groundwater to a potential beneficial use as a drinking water source. The selected remedy meets these RAOs through treatment of soil and groundwater contaminated with VOCs and, where feasible, the removal of soil contaminated with non-VOCs. The RAOs also serve to facilitate the five-year review determination of protectiveness of human health and the environment.

The RAOs for Cooper Drum are listed below:

Groundwater

- Restore the groundwater through VOC treatment to drinking water standards (MCLs) for beneficial use;

Soil

- Remediate soil COCs (VOCs) to prevent contaminants from migrating into groundwater at levels that would exceed drinking water standards; and

- Where feasible, remediate non-VOC contaminated soil above health-based action levels that are protective of ongoing and potential future site uses.

Indoor Air

- Remediate COCs (VOCs) in soil and groundwater to health-based action levels to eliminate potential exposures to indoor air contaminants created by site contamination.

The RAOs were formed based on the following:

- Reasonable anticipated land use scenarios used in the human health risk assessment that include continuation of heavy industrial land use and the possibility of future development for on-site residential land use;

- The soil contaminants pose a continuing contaminant threat to the aquifer (identified as a potential drinking water source) underlying Cooper Drum; and

- The human health risk assessment identified the COCs driving the need for remedial action (risk drivers) and need for remedial action protective of human health.

9.0 Description of Alternatives

From the screening of technologies, EPA evaluated and assembled a range of alternatives including:

Soil Alternatives

- Alternative 1 - No Action
- Alternative 2 - Dual Phase Extraction/GAC*/Institutional Control
- Alternative 3 - Dual Phase Extraction/GAC/Institutional Control/Excavation

* GAC - Granular Activated Carbon

Groundwater Alternatives

- Alternative 1 - No Action
- Alternative 2 - Extraction/GAC
- Alternative 3 - Extraction/GAC/In Situ Chemical Oxidation*
- Alternative 4 - Extraction/GAC/In Situ Chemical Treatment - Reductive Dechlorination and Oxidation
- Alternative 5 - Extraction/GAC/In Situ Chemical Treatment - Reductive Dechlorination*
- Alternative 6 - In-Well Air Stripping with Groundwater Circulation Wells

* Groundwater Alternatives 3, 4, and 5 share the common components of extraction and ex situ physical treatment for VOCs. With regards to in situ treatment, groundwater Alternative 4 (chemical oxidation and reductive dechlorination) is a combination of Alternative 3 (chemical oxidation) and 5 (reductive dechlorination). Therefore, groundwater Alternatives 3 and 5 have been deleted from the ROD as separate alternatives.

9.1 Description of Soil Alternatives/Remedy Components

9.1.1 Soil Alternative 1 - No Action

In accordance with the NCP, a no action alternative must be evaluated to serve as a basis for comparison with other remedial alternatives. Under this remedial action, no action is undertaken toward cleanup or reducing the risk to human health. There is no capital cost or operation and maintenance cost associated with this alternative. Because this alternative is not protective of human health and the environment and does not comply with applicable or relevant and appropriate requirements (ARARs), this alternative is not further evaluated.

9.1.2 Soil Alternative 2 - Dual Phase Extraction/GAC/Institutional Controls

Treatment Components

This alternative applies a physical treatment technology combined with institutional controls. The physical treatment entails using dual phase extraction (DPE) to treat the VOCs in soil. DPE is an enhancement of the conventional soil vapor extraction (SVE) technology; it is a process in which

contaminated soil vapors and groundwater are extracted simultaneously. SVE has been established as an EPA presumptive remedy for cleanup of VOCs in soil. The alternative includes three wells to extract both groundwater and soil gas and five vapor monitoring wells. Soil vapors and groundwater contaminants would be extracted and treated with granular activated carbon (GAC) in vessels. Additives, such as potassium permanganate, would be used to treat any vinyl chloride contamination. There are two discharge options for the treated groundwater, discharge to publicly owned treatment works (POTW) and reinjection to the aquifer. The treated soil gas would be discharged into the atmosphere. The estimated soil volume to be treated under the HWA using DPE is approximately 77,000 cubic yards (this assumes treatment down to a depth of 50 feet bgs.)

Institutional Control Components

Institutional controls will be placed on Cooper Drum to restrict use. These controls limit future use of Cooper Drum by eliminating exposure to non-VOC soil contaminants and consist of a restrictive covenant which will: 1) place limitations on activities that might expose the subsurface; 2) prevent future use including residential, hospital, day care center and school uses; and 3) notify property users and the public of these controls. This restrictive covenant will be binding on subsequent property owners and will remain in place as long as soil contaminated with non-VOCs remains on the property and poses a health risk.

Monitoring Components

The total duration of the DPE remedial action is assumed to be five years. Operation of the DPE system is estimated to continue for approximately two years. One baseline sampling event and three post-remedial action compliance sampling events of vapor monitoring and groundwater extraction wells are planned.

Operation and Maintenance (O&M) Components

O&M activities for VOC treatment using DPE are related to upkeep of the extraction systems and the liquid and vapor GAC treatment facilities, including controls and communications systems, mechanical components (e.g., blowers, submersible pumps, flow meters, valves, connections), disposal of spent GAC and recharging of the GAC vessels, pipeline maintenance, extraction and vapor monitoring well maintenace, grounds upkeep, and reporting of spills, uncontrolled emissions, or other anomalous occurrences.

O&M activities related to institutional controls consist of administrative oversight of site activities and periodic inspections.

Expected Outcomes

Dual phase extraction is expected to remove existing VOC contamination in soil to levels that prevent impact to the aquifer below ground and to the indoor air quality above ground. Since non-VOC soil contamination will be left on site under Alternative 2, institutional controls will be implemented on Cooper Drum to restrict future land use, including residential, hospital, day care center and school uses.

9.1.3 Soil Alternative 3 Dual Phase Extraction/GAC/ Institutional Controls/Excavation

Treatment Components

Alternative 3 is similar to Alternative 2 in that it applies physical treatment combined with institutional controls, but it also includes the excavation and off-site disposal of soil contaminated with non-VOCs. DPE with GAC treatment, as described in Alternative 2, would be used to remediate an estimated 77,000 cubic yards of VOC-contaminated soil. Excavation would remove an estimated 2,700 tons of contaminated soil and effectively remove any potential health risk resulting from exposure to non-VOCs. Soil would be transported off site to an approved landfill.

Institutional Control Components

Institutional controls would be used in areas where soil excavation is not feasible. Emission control measures would be taken during soil excavation to eliminate potential problems associated with dust and exposure to subsurface contaminants.

Monitoring Components

Vapor monitoring requirements would be similar to Alternative 2. Confirmation soil samples would be obtained in excavated soil areas.

Operation and Maintenance (O&M) Components

O&M activities for VOC treatment using DPE and institutional controls are the same as for Alternative 2.

Expected Outcomes

Dual phase extraction is expected to remove existing VOC contamination in soil to levels that prevent impact to the aquifer below ground and to the indoor air quality above ground. No land use restrictions are expected if all soil contaminated with non-VOCs is excavated and removed off site. Restrictions on future land use, including residential, hospital, day care center and school uses, will be implemented for Cooper Drum with the understanding that excavation of all non-VOC contaminated soil is deemed infeasible (e.g., under existing structures). Land use restrictions could be lifted if the contaminated soil beneath structures is removed or treated prior to future land development.

9.2 Description of Groundwater Alternatives/Remedy Components

9.2.1 Groundwater Alternative 1 - No Action

In accordance with the NCP, a no action alternative must be evaluated to serve as a basis for comparison with other remedial alternatives. Under this remedial action, no action is undertaken toward cleanup or reducing the risk to human health. There is no capital cost or operation and

maintenance cost associated with this alternative. Because this alternative is not protective of human health and the environment and does not comply with ARARs, this alternative is not further evaluated.

9.2.2 Groundwater Alternative 2 - Extraction/GAC

Treatment Components

Alternative 2 applies physical treatment technology using vertical wells to extract VOC-contaminated groundwater and liquid-phase GAC vessels to remove the VOCs. The alternative would contain the groundwater contamination beneath Cooper Drum. However, groundwater extraction may result in further commingling of on-site plumes with upgradient plumes originating off site. Three vertical extraction wells would be used to extract groundwater at a rate of up to 33 gallons per minute (gpm) per well. The rate of extraction would have to be closely monitored and adjusted to minimize the potential for plume commingling.

The extracted water would be pumped through two vessels containing liquid-phase activated carbon. The treatment plant capacity would be 100 gpm. To treat vinyl chloride, potassium permanganate would also be added. In this way, all COCs in groundwater would be treated down to drinking water standards.

Containment Components

Groundwater extraction would contain and control further migration of the plume. The treated water could be reinjected into the groundwater aquifer or discharged to a POTW. If reinjection is selected, three new injection wells would be installed upgradient of the HWA. Reinjection of treated groundwater into the plume must meet state policies and waste discharge conditions. The benefits of reinjection include reducing the possible commingling with off-site plumes, diluting the groundwater contaminants, and flushing the contaminants toward the extraction wells. Discharge to a POTW located off site would have to comply with waste discharge requirements and payment of connection and usage fees.

Monitoring Components

Depending on various factors, the time required to capture the VOC plume was estimated to be between 13 and 20 years. For cost estimation purposes, the duration of remedial action was set to 20 years. After the first year of operation, the monitoring frequency for VOCs would be as follows: bi-weekly at the treatment plant, monthly at the extraction wells, and semi-annually at the monitoring wells. Annual compliance monitoring of all wells would continue for at least three years after completion of remedial action. This monitoring scheme was the basis of the cost analysis, however, site conditions may require changes to monitoring frequencies.

Required O&M

O&M activities for VOC treatment are related to upkeep of the extraction systems and the liquid GAC treatment facilities, including controls and communications systems, mechanical components

(e.g., external and submersible pumps, flow meters, valves, connections), disposal of spent GAC and recharging of the GAC vessels, pipeline maintenance, extraction and injection well maintenace (may include periodic cleaning/acid washing), monitoring well maintenace, grounds upkeep, and reporting of spills or other anomalous occurrences.

Expected Outcomes

The contaminated groundwater under Cooper Drum is semi-confined in the upper aquifer. Implementation of groundwater Alternative 2 would remove VOC contamination above drinking water standards in the shallow aquifer and would protect the existing beneficial use of the currently uncontaminated deeper aquifers.

9.2.3 Groundwater Alternative 4 - Extraction/GAC/In Situ Chemical Treatment-Reductive Dechlorination and Oxidation

Treatment Components

Alternative 4 combines the use of ex situ physical and in situ chemical treatment technologies. Similar to Alternative 2, physical treatment would entail extracting groundwater contaminated with VOCs and treating it with GAC, so as to clean up and contain the groundwater contamination underneath Cooper Drum. Chemical treatment of VOCs in groundwater would be enhanced with in situ chemical treatment using either reductive dechlorination or chemical oxidation.

Use of enhanced reductive dechlorination treatment could expedite natural attenuation without the need for chemical oxidants. Because of the reliance on natural attenuation processes, the time required for complete cleanup is uncertain. If a chemical oxidant is used, oxidation would occur fairly quickly (i.e., within days).

Pilot-scale treatability studies would be required to determine the effectiveness of in situ reductive dechlorination and chemical oxidation. The results of the treatability tests would be used to determine which in situ technology (i.e., reductive dechlorination or oxidation) is most effective under site conditions. For costing purposes, it was assumed that both technologies would be used to enhance the treatment of groundwater contamination.

Compared to Alternative 2, using these two in situ treatment options individually or in combination would most likely reduce the time required for meeting remedial goals. It is expected that in situ oxidation would significantly reduce the concentrations of several prominent VOCs (i.e., PCE, TCE, DCE, and vinyl chloride) and reduce the time required to clean up the groundwater, as compared to Alternative 2.

Two extraction wells would be used at a lower extraction rate of up to 20 gallons per minute (gpm) per well. Because of the use of in situ treatment, it is expected that the extraction wells would be mainly used to contain the plume. Compared to Alternative 2, this would reduce the potential for plume commingling.

If reductive dechlorination is used, about 240 temporary injection points would be used to inject the dechlorination agent. For cost estimating purposes, it was assumed that HRC® (a proprietary reductive dechlorination agent) would be used. If chemical oxidation is used, the oxidizing reagent (e.g., sodium permanganate) would be injected in approximately 160 temporary injection points. Subsequent injections may be needed for successful treatment. Implementation would temporarily disturb traffic on Rayo Avenue and other activities on site and off site, and would require special permits and coordination with the city of South Gate.

Containment Components

Treated water could be reinjected into the groundwater aquifer or discharged to a POTW. The purpose of the limited extraction/treatment system would be to contain further plume migration, minimize potential mixing with other VOC plumes, and clean up residual VOC concentrations to meet the remedial action goals.

Monitoring Components

Similar to Alternative 2, groundwater monitoring will be used to gauge the success of the remedial action. Depending on the rate of contaminant reduction, monitoring may become the only action at Cooper Drum. Monitored natural attenuation could be employed if it can be demonstrated that contaminant concentrations in the groundwater plume have stabilized at reduced concentrations. The estimated cost for this alternative is based on a project duration of 20 years.

Required O&M

O&M activities for VOC treatment using extraction systems and the liquid GAC treatment facilities are the same as for Alternative 2. There is no O&M associated with in situ treatment.

Expected Outcomes

The contaminated groundwater under Cooper Drum is semi-confined in the upper aquifer. Implementation of groundwater Alternative 4 would remove VOC contamination above drinking water standards in the shallow aquifer and would protect the existing beneficial use of the currently uncontaminated deeper aquifers.

9.2.4 Groundwater Alternative 6 - In-Well Air Stripping with Groundwater Circulation Wells

Treatment Components

Alternative 6 applies a physical treatment technology through in situ treatment of VOCs in groundwater. It consists of installing an estimated 34 groundwater circulation wells (GCWs) within the groundwater plume down to 100 feet below the surface. The GCWs are used to achieve in-well air stripping by injecting air into the bottom of the well. This process promotes the circulation of groundwater through the well. Air rises through the groundwater and “strips” (removes) the VOC contaminants. The contaminated vapor is then passed through an aboveground treatment system that

uses GAC to remove the VOCs. The treated vapor, from which VOCs have been removed, is discharged to the air.

Due to the uncertainty regarding the effectiveness of using GCWs at Cooper Drum, a treatability study would be required to measure the effectiveness of this technology. The treatability study results could then be used to refine the placement and operation of the GCWs. The advantage of this technology would be the in situ treatment of all the groundwater contaminants without the need to extract, treat, and discharge any groundwater. The main disadvantages are the high potential for scale buildup and biofouling in the underground wells and treatment system and the reliance of the technology on the formation of groundwater circulation zones to effectively capture and treat contamination.

Operation and Maintenance Components

Operation and maintenance of the GCWs underground could be difficult and costly, since there is a high potential for scaling and biofouling inside the GCWs. O&M cost estimates are higher for this alternative as compared to the others.

Monitoring Components

Costs associated with this alternative are based on a project duration of 20 years. These costs could be substantially lower or higher depending on the results of a pilot-scale test, which would indicate the number of wells that would be needed to reach remedial action goals. Sampling of the groundwater monitoring wells would occur at the same frequency as Alternatives 2 and 4.

Required O&M

O&M activities for VOC treatment are related to upkeep of the GCWs and the closed loop treatment systems, including controls and communications systems, mechanical components (e.g., blowers, flow meters, heat exchanger, valves, connections), disposal of spent GAC and recharging of the GAC vessels, pipeline maintenance, prevention and treatment of scale buildup inside pipelines and pipeline components, groundwater circulation well maintenace (may include acid dripping to prevent scale buildup), monitoring well maintenace, grounds upkeep, and reporting of spills, uncontrolled emissions, or other anomalous occurrences.

Expected Outcomes

The contaminated groundwater under Cooper Drum is semi-confined in the upper aquifer. Implementation of groundwater Alternative 6, if shown to be effective in treatability studies during the RD, would remove VOC contamination above drinking water standards in the shallow aquifer and would protect the existing beneficial use of the currently uncontaminated deeper aquifers.

9.3 Common Elements and Distinguishing Features of Each Alternative

Common elements to soil Alternatives 2 and 3 include:

- Reduction of volume and mobility of the VOCs in the soil.
- Use of DPE for treating VOC contamination in soil and groundwater.
- Implementation of institutional controls, however, under Alternative 3 would only need to be in place if non-VOC contamination beneath structures remains on site.
- Attainment of ARARs.

The distinguishing element of Alternative 3 is the inclusion of excavation for removal of shallow soil contaminated with non-VOCs. Alternative 3 is more reliable in the long term because most, if not all, of the non-VOC contamination will be permanently removed off site. Any residual contamination will be in inaccessible areas beneath existing structures and not a health hazard for above ground activities. Subsurface activities would be restricted by implementing institutional controls. The excavation activities under Alternative 3 are likely to disrupt ongoing site operations for over two months.

Common elements to groundwater Alternatives 2, 4, and 6 include:

- Reduced volume and mobility of the VOCs in groundwater.
- Use of GAC for treatment of VOCs.
- Alternatives 2 and 4 have reinjection or discharge to the local publicly owned treatment works (POTW) as groundwater disposal options.
- Attainment of ARARs.

The distinguishing elements include:

- Alternative 2 uses only ex situ physical treatment.
- Alternative 4 uses lower extraction rates compared to Alternative 2.
- Alternative 4 uses both ex situ physical and in situ chemical treatment.
- Alternative 6 used only in situ physical treatment. Construction of 34 GCWs and the aboveground treatment facilities in Alternative 6 is expected to take longer than construction activities associated with alternatives 2 and 4.
- Implementation of Alternatives 4 and 6 would entail evaluation of the in situ treatment in pilot-scale treatability studies.

- Implementation of Alternatives 2 and 4 is expected to provide better groundwater plume control and containment, resulting in more long term reliability.

Table 9-1 summarizes the cost, number of extraction and injection wells, treatment flows, and number of years to achieve RAOs for the soil and groundwater alternatives.

Table 9-1
Summary of General Comparison Information for Each Alternative

Alternative	Media	20 Year Present Value Cost ($million)	Number of Extraction Wells	Total Groundwater Treatment Flow (gpm)	Number of Reinjection Wells	Estimated Time to Achieve RAO (years)
Soil Alternative 2	soil	1.28	3	9 (150 scfm for soil vapor)	0	5-20 [a]
Soil Alternative 3	soil	2.77	3	9 (150 scfm for soil vapor)	0	5 [b]
Groundwater Alternative 2	groundwater	3.53 to 4.08 [c]	3	99	3	20
Groundwater Alternative 4	groundwater	5.36	2	40	1	up to 20 [d]
Groundwater Alternative 6	groundwater	6.59	34	0	0	20

a Based on institutional controls to eliminate exposure pathways from non-VOC contaminated soil.
b Based on excavation and off-site disposal to eliminate exposure pathways from non-VOC contaminated soil.
c The cost range is associated with different discharge options.
d Remediation may be expedited compared to Groundwater Alternative 2 because of the addition of in situ chemical treatment.

10.0 Comparative Analysis of Alternatives

In accordance with the NCP, the soil and groundwater alternatives were evaluated by the EPA using the nine criteria described in Section 121(b) of CERCLA. For an alternative to be an acceptable remedy it must, at a minimum, satisfy the statutory requirements of two threshold criteria: 1) Overall Protection of Human Health and the Environment, and 2) Compliance with Applicable or Relevant and Appropriate Requirements. "No Action" (Alternative 1) for soil and groundwater is the only retained alternative that does not satisfy these threshold criteria. Therefore, this alternative will not be further evaluated in the comparative analysis.

In addition to the discussion in the following paragraphs, the comparative analysis of soil Alternatives 2 and 3, and groundwater Alternatives 2, 4, and 6 are summarized in Table 10-1.

10.1 Overall Protection of Human Health and the Environment

This criterion addresses whether each alternative provides adequate protection of human health and the environment and describes how health risks are eliminated, reduced, or controlled, through treatment, engineering controls, and/or institutional controls.

10.1.1 Soil Alternatives

Alternatives 2 and 3 are protective of human health and the environment. VOC contamination will be treated to meet remedial action goals. Institutional controls will prevent exposure to non-VOC contamination remaining in the subsurface. Existing pavement maintenance is necessary to ensure total protectiveness and prevent exposing individuals to existing contamination. Alternative 3 would provide additional protection from possible exposure to non-VOCs by removing contaminated soil above action levels from Cooper Drum.

Table 10-1
Comparative Analysis of Soil and Groundwater Remedial Action Alternatives With Respect to CERCLA Criteria

Criterion	Soil Alternative 2	Soil Alternative 3 (Selected Remedy)	Groundwater Alternative 2	Groundwater Alternative 4 (Selected Remedy)	Groundwater Alternative 6
Overall protectiveness	Protective	Protective	Protective	Protective	Protective
Compliance with ARARs	Does not comply with ARARs for non-VOCs	Better; complies with ARARs for VOCs and non-VOCs	Complies with ARARs	Complies with ARARs	Complies with ARARs provided recirculation zones are formed.
Long-term effectiveness and permanence	Effective for VOCs. Effective for non-VOCs while institutional controls are in place and pavement is maintained in good condition	More effective for non-VOCs; shallow and accessible non-VOC contamination will be permanently removed	Effective; groundwater with COC levels above action levels will be treated	Potentially more effective; supplemental in situ treatment may expedite cleanup	Stand alone in situ technology may be effective if recirculation zones are formed and scaling is prevented
Reduction in toxicity, mobility, or volume through treatment	Does not reduce toxicity or volume of non-VOCs	Better for non-VOCs; volume of non-VOC contamination will be reduced	Reduces volume of COCs	Potentially better; also reduces toxicity of COCs in place	Reduces volume of COCs if recirculation zones are formed
Short-term effectiveness	VOC treatment within 2 years. Well construction must not create conduits for vertical migration of COCs. Soil gas emissions must be effectively controlled	Same as Alternative 2. Fugitive dust and soil gas emissions during excavation and transport must be controlled. Workers must be properly attired	Appreciable short-term results are not expected. Potential commingling with off-site plumes. Well construction must not create conduits for vertical migration of COCs	Better; supplemental in situ treatment may expedite cleanup. Lower potential for plume commingling.	Some increase in VOC levels may be observed initially. Well construction must not create conduits for vertical migration of COCs
Implementability	Construction will temporarily disturb surface structures and activities. Transport of waste off site is required. Institutional controls will require that an appropriate entitiy (e.g. DTSC) be willing to accept and enforce the restrictive covenant to be executed by the property owners.	Same as Alternative 2, plus transport will also be required for excavation and off-site disposal of contaminated soil	Anti-degradation policies may apply if treated water is reinjected. Construction activities will temporarily disturb surface structures and some activities at Cooper Drum. Waste discharge conditions from the RWQCB are required	Same as Alternative 2, plus numerous (temporary) injection points will disturb surface structures, activities, and traffic on- and off-site. Waste discharge conditions will be required for injection of chemicals and treated water	Worse; installation of numerous (permanent) wells and associated piping will disturb surface structures and activities both on- and off-site. An above-ground treatment plant with sound-proof enclosure is required. Waste discharge conditions are required
Present worth capital cost ($1,000)	$460	$1,946	$447 [a] $638 [b]	$2,451	$2,734
Annual O&M cost ($1,000)	$47	$47	$220 [a] $247 [b]	$208	$261
Total present worth cost ($1,000) [c]	$1,284	$2,770	$3,529 [a] $4,077 [b]	$5,364	$6,589

[a] Treated water discharged to POTW.
[b] Treated water reinjected into aquifer.
[c] Present worth cost estimates are based on 2001 dollars and were calculated using a 7% discount rate.
Remedial action start year was assumed to be 2003, and the duration of remedial action was set to 20 years.
The cost of 3 years of post-remedial action compliance monitoring was included for all action alternatives.

ARAR applicable or relevant and appropriate requirements
COC chemical of concern
O&M operation and maintenance
VOC volatile organic compound

10.1.2 Groundwater Alternatives

With regards to treatment of COCs above action levels, Alternatives 2 through 6 would be protective. Groundwater VOC contamination above remedial action goal levels would be extracted or stripped and treated using GAC. The health risk from any remaining contamination would be negligible.

Alternatives 3 through 5 which include use of in situ chemical treatment in addition to ex situ treatment are expected to expedite the destruction of hazardous VOCs in the groundwater.

Regarding plume containment, Alternatives 2 and 4 which include use of extraction, treatment, and reinjection of groundwater, or "pump-and-treat" response action, would be more effective than Alternative 6 which is strictly an in situ response action.

10.2 Compliance with Applicable or Relevant and Appropriate Requirements

Section 121(d) of CERCLA and NCP §300.430(f)(1)(ii)(B) require that remedial actions at CERCLA sites at least attain legally applicable or relevant and appropriate federal and state requirements, standards, criteria, and limitations which are collectively referred to as ARARs, unless such ARARs are waived under CERCLA §121(d)(4).

Applicable requirements are those cleanup standards, standards of control, and other substantive requirements, criteria, or limitations promulgated under federal environmental or state environmental or facility siting laws that specifically address a hazardous substance, pollutant, contaminant, remedial action, location, or other circumstance found at a CERCLA site. Only those state standards that are identified by a state in a timely manner and that are more stringent than federal requirements may be applicable. Relevant and appropriate requirements are those cleanup standards, standards of control, and other substantive requirements, criteria, or limitations promulgated under federal environmental, state environmental, or facility siting laws that, while not "applicable" to a hazardous substance, pollutant, contaminant, remedial action, location, or other circumstance at a CERCLA site address problems or situations sufficiently similar to those encountered at the CERCLA site that their use is well suited to the particular site. Only those state standards that are identified in a timely manner and are more stringent than federal requirements may be relevant and appropriate.

Compliance with ARARs addresses whether a remedy will meet all of the applicable or relevant and appropriate requirements of other federal and state environmental statutes or provides a basis for invoking a waiver. None of the soil or groundwater alternatives required a waiver for ARARs.

Soil Alternatives 2 and 3 have common ARARs associated with the DPE, GAC, and institutional controls. The use of DPE for VOCs in soil includes compliance with emission standards for volatile organics. Soil Alternative 2 would depend on institutional controls to eliminate the residential exposure pathway for non-VOC soil contaminants. Soil Alternative 3 includes the added component of excavation and off-site disposal of non-VOC-contaminated soil to protect human health. Acquisition of permits would not be necessary for on-site treatment operations.

Groundwater Alternatives 2, 4, and 6 would meet all of the ARARs. These groundwater alternatives rely on treatment to reduce toxicity and mobility of the VOCs in groundwater. Groundwater Alternatives 2 and 4 would discharge treated groundwater to the aquifer or the local POTW. A permit would be necessary for off-site discharge of treated water to the POTW; treatment would comply with the local sewer discharge limitations and fee requirements.

All of the ARARs for the selected remedy are presented in the Statutory Determinations (40 CFR §300.430(f)(5)(ii)(B)).

10.3 Long-Term Effectiveness and Permanence

This criterion refers to the ability of a remedy to maintain reliable protection of human health and the environment over time, once cleanup levels have been met. This criterion includes the consideration of residual risk that will remain on-site following remediation and the adequacy and reliability of controls.

10.3.1 Soil Alternatives

With regards to VOCs, Alternatives 2 and 3 would provide long-term effectiveness because the remediation would continue until VOC levels fall below remedial action goal levels. Once remedial action goals are achieved, compliance monitoring will provide an early warning if contamination rebound is observed. Dual phase extraction is recognized as an enhancement to the "presumptive remedy" of SVE which implies that the process has been shown to be widely effective and permanent.

With regards to non-VOCs, institutional controls under Alternative 2 would be effective so long as the administrative restrictions and access controls remain in place, and the pavement (capping) is maintained. However, contaminated soil would remain as a potential source of groundwater contamination. Alternative 3 (the selected remedy) would be more effective because, where possible, soil contaminated with non-VOCs above action levels would be permanently removed from Cooper Drum, thus reducing potential health risks.

Five-year reviews would be necessary to evaluate the effectiveness of either alternative because hazardous substances would remain in the subsurface where excavation is not deemed feasible.

10.3.2 Groundwater Alternatives

Over the long-term, Alternatives 2 and 4 would provide an effective means of controlling the migration of the existing contaminant plume in the Gaspur Aquifer. The contamination in the groundwater would be permanently reduced because remedial action would continue until RAOs were met. Once RAOs are achieved, compliance monitoring would provide an early warning if contamination rebound were observed. (If treated water is reinjected, care must be taken to prevent fouling and scaling of the injection wells over time.)

The long-term effectiveness of Alternative 6 is uncertain since it is dependent upon successful implementation of the groundwater circulation wells and formation of the recirculation cells under

site conditions. In addition, in-well scale formation must be avoided if this alternative is to be effective. Compared to Alternatives 2 and 4, Alternative 6 is the only remedy that does not include a pump-and-treat component and utilizes only in situ technology. Plume control will be possible only if recirculation cells are effectively established. Additional wells may be required downgradient of the plume for added plume control.

10.4 Reduction of Toxicity, Mobility, or Volume Through Treatment

This CERCLA criterion refers to the anticipated performance of the treatment technologies that may be included as part of a remedy. Remedial actions that use active treatment to permanently and significantly reduce the toxicity, mobility, and volume of contamination satisfy this criterion.

10.4.1 Soil Alternatives

Through active treatment, Alternatives 2 and 3 would equally reduce the toxicity, mobility, and volume of VOC contamination in soil. VOCs above action levels would be extracted from the soil and adsorbed onto GAC. The VOCs would be permanently destroyed in the likely event that the spent carbon is eventually reactivated by the carbon vendor.

Alternative 3 (the selected remedy) is more effective with respect to this CERCLA criterion, however. By removing non-VOC contamination above action levels in accessible areas, Alternative 3 would permanently reduce the volume of non-VOC contamination in Cooper Drum subsurface. The excavated soil would be disposed in a landfill, where the contaminants would be actively destroyed or, at a minimum, encapsulated, resulting in reduced mobility.

10.4.2 Groundwater Alternatives

Alternatives 2 and 4 would reduce the toxicity, mobility, and volume of COCs through active treatment (adsorption onto liquid-phase GAC). The spent GAC would be removed from Cooper Drum and likely reactivated, resulting in eventual destruction of the COCs.

In addition to the pump-and-treat action of Alternative 2, Alternatives 4 includes the use of in situ technologies which, if effective, would chemically react with the COCs, thus reducing the volume and toxicity of these compounds in the groundwater. This would reduce the contamination load on the GAC treatment system.

With regards to non-COCs which may be present at high background concentrations (e.g., arsenic), discharge to POTW would result in removal of the contaminants from the Cooper Drum subsurface, whereas reinjection of the treated groundwater would not.

Alternative 6 would reduce the toxicity, mobility, and volume of COCs in groundwater, by stripping the VOCs, followed by adsorption of the VOCs onto GAC. However, the effectiveness of this remedy would be undermined if the groundwater circulation wells produced scale or if recirculation zones did not form effectively. Because of the proven pump-and-treat component, Alternatives 2 and 4 are expected to be more effective in extracting and permanently removing VOCs from the groundwater.

10.5 Short-Term Effectiveness

This criterion addresses the period of time needed to implement the remedy and any adverse impacts that may be posed to workers, the community, and the environment during construction and operation of the remedy until cleanup levels are achieved.

10.5.1 Soil Alternatives

Remedial action goals for VOCs may be achieved within two years of startup if either Alternative 2 or 3 is implemented. However, periods of system shutdown and contamination rebound, followed by additional extraction, may lengthen the duration of remedial action. Care must be taken during construction of the extraction and vapor monitoring wells and conveyance piping to minimize/prevent soil gas emissions. The vapor-phase GAC must be designed so as to create no air emissions. Furthermore, well construction must be completed so as not to create a "conduit" through which contamination can migrate vertically.

Both Alternatives 2 and 3 include use of institutional controls to a different extent as a means of preventing exposure to the non-VOC contamination in soil. These controls are expected to remain in place until subsurface contamination is removed or otherwise no longer deemed hazardous.

If Alternative 3 is implemented, excavation and disposal of non-VOC contaminated soil above action levels is expected to be completed in a matter of months. Care must be taken to control fugitive dust and/or soil gas emissions during soil excavation and transport activities. Workers would be required to wear appropriate levels of protection to avoid exposure during excavation and transport activities.

10.5.2 Groundwater Alternatives

Appreciable short-term results (e.g., in less than a year) are generally not associated with the extraction/GAC treatment component of Alternatives 2 and 4. However, some reduction in mass and mobility of contamination is expected as groundwater is removed and treated. With regards to negative short-term effects, well construction must be completed so as not to create a "conduit" through which contamination can migrate vertically. Since liquid-phase GAC would be used, no air emissions are associated with use of this alternative.

Because of the higher extraction rates, there is a higher potential for commingling of plumes on site and off site if Alternative 2 is implemented.

Implementation of Alternative 4 may entail use of an oxidizing reagent for in situ oxidation of groundwater COCs. Oxidation of most COCs is expected to be rapid and effective. During application, skin contact with the oxidizing solution, and inhalation of any dust or vapors should be avoided. Workers should use protective gear and clothing. In some cases, oxidation may temporarily inhibit growth of anaerobic bacteria in the groundwater, which in turn may adversely affect biodegradation of the contaminants. Also, in the short-term, because of increased mobility, the concentrations of some metals may increase. The concentrations would eventually return to background concentrations. Well construction must be completed so as not to create a "conduit"

through which contamination can migrate vertically. The pump-and-treat component of Alternative 4 must be designed so as to provide adequate hydrologic control of the injected oxidizing solution.

In situ reductive dechlorination is a component of Alternatives 4. If HRC® is used and is effective, dechlorination of COCs should occur within 6 months of application. Application may be completed over a 12-week period. In situ reductive dechlorination, by definition, relies on biodegradation processes for breakdown of the COCs. In the short-term, some increase in concentrations of TCE breakdown byproducts (e.g., cis, 1-2, DCE and VC) may occur. If necessary, under Alternative 4, chemical oxidation of these compounds would occur fairly quickly if in situ oxidation is used following HRC® application.

If groundwater recirculation zones are formed effectively upon implementation of Alternative 6, some short-term removal of VOCs may be expected. Initially, some increase in VOC concentrations may be noticed, as VOCs volatilize and desorb from the soil formation. Groundwater circulation well construction must be completed so as not to create a conduit through which contamination can migrate vertically. The vapor phase GAC treatment must be designed so as to eliminate the potential for air emissions.

10.6 Implementability

Implementability addresses the technical and administrative feasibility of a remedy from design through construction and operation. Factors such as availability of services and materials, administrative feasibility, and coordination with other governmental entities are also considered.

10.6.1 Soil Alternatives

Both Alternatives 2 and 3 are technically feasible and implementable. All materials and services needed for implementation are readily and commercially available.

With regards to VOC treatment, some interference with ongoing business activities at Cooper Drum is expected because implementation of the extraction/DPE system would result in the installation of extraction wells and related conveyance piping, and the construction of an aboveground treatment plant. A permit would be required for off-site discharge of the extracted water to the POTW. Implementation would result in disruption of roads and surface structures to accommodate the aboveground and buried systems. Operation and maintenance of the system would include cleaning and replacement of well components, disposal and replacement of activated carbon, and maintenance of pumps, controls, and other equipment.

With regards to non-VOCs in soil, implementation of institutional controls will require cooperation by the state (DTSC) or local government, since some appropriate entity must agree to accept and enforce the restrictive covenant. Both Alternative 2 and Alternative 3 rely to some extent on institutional controls.

The excavation component of Alternative 3 is implementable and technically feasible. However, soil excavation would result in disruption of surface structures (pavement, etc.) over the short-term. Excavation would not be implementable or feasible for areas where contamination is found to be too

deep or under existing structures. Transport of the excavated soil to an off-site landfill would be required.

10.6.2 Groundwater Alternatives

Implementation of all groundwater alternatives is technically feasible and all materials and services needed for implementation are readily and commercially available.

The extraction/treatment component of Alternatives 2 and 4 would result in the installation of wells and related conveyance piping, and the construction of an aboveground treatment plant. Coordination with the City of South Gate would be required to install treatment system components which may disrupt traffic. Additionally, because non-COCs would not be treated below MCLs, reinjection of treated water would require coordination with the RWQCB. EPA's position is that reinjection of water with non-COCs at background levels would be acceptable, so long as the treated water is reinjected back into the same aquifer, not far from where it was extracted. Discharge of groundwater to the POTW may be acceptable if reinjection is not feasible or the discharge volume is small (e.g., in the case of Alternative 4). Discharge limits would have to comply with off-site permit requirements in either case. Operation and maintenance of the system would include cleaning and replacement of well components, disposal and replacement of activated carbon, and maintenance of pumps, controls, and other equipment.

Implementation of Alternative 4 would additionally entail injecting a reagent into many temporary injection points located in areas of activity. For technical feasibility, care must be taken to inject the reagent such that there is adequate overlap of the radii of influence between consecutive injection points. This frequency of injection points would cause disruption of site activities and traffic, and impact surface structures. Coordination with City of South Gate officials would be required. Discharge conditions from the RWQCB would be required to allow for injection of the reagents and water into the subsurface.

Some interference with ongoing business activities at Cooper Drum is expected with implementation of Alternative 6 because it would result in the installation of numerous permanent groundwater circulation wells and related conveyance piping both on site and off site, and the construction of an aboveground treatment plant on site. Coordination with the City of South Gate would be required to install treatment system components which may disrupt traffic. Any water discharges would need to be coordinated with the appropriate agencies. A soundproof building would be required to house the blowers. The most difficulty could be from having to keep the treatment system, the wells, and the conveyance piping free of scale. Operation and maintenance of the system would also include cleaning and replacement of well components, disposal and replacement of activated carbon, and maintenance of pumps, controls, and other equipment.

10.7 Cost

Table 10-1 lists the capital, annual O&M, and total present worth cost estimates for the soil and groundwater alternatives.

10.7.1 Soil Alternatives

Because of the added capital cost associated with the excavation component, the total present worth cost for Alternative 3 ($2.77 million) is more than twice that of Alternative 2 ($1.29 million). However, the difference in cost
will be less if the actual volume of excavated soil is less than assumed, or if some of the excavated uncontaminated soil can be used for refill or can be transported to a Class II landfill.

The annual O&M cost for both alternatives is equivalent because these costs are associated with the operation and maintenance of the extraction/treatment systems and implementation of the institutional controls.

10.7.2 Groundwater Alternatives

The estimated present worth costs for the groundwater alternatives, not including the No Action alternative, range from a minimum of $3.53 million for Alternative 2 (when using POTW discharge) to $6.59 million for Alternative 6. All costs are based on a 20-year duration for remedial action.

Although the projected cost for implementing Alternative 4 (the selected remedy) is shown to be higher than that for Alternative 2, the following items should be taken into perspective for a fair comparison:

1) The use of in situ treatment in addition to the pump-and-treat action may expedite cleanup, to such a level that the overall cost of implementation of Alternative 4 is less than Alternative 2.

2) It is likely that only one in situ treatment - oxidation or reductive dechlorination, whichever is found to be more effective during treatability studies - will actually be used as part of Alternative 4.

3) The extent of in situ treatment (i.e., amount of material used, number of injection points, and frequency of applications) may be less than projected, such that the implementation cost for Alternative 4 is less than estimated.

Because the pump-and-treat component of Alternative 4 is less extensive than that for Alternative 2, the associated annual O&M costs are expected to be far less.

10.8 State Acceptance

The State of California Department of Toxic Substances Control and the Los Angeles Regional Water Quality Control Board have concurred with EPA's preference for soil Alternative 3 and groundwater Alternative 4.

10.9 Community Acceptance

During the public comment period for the Proposed Plan, no written comments were received. Questions that were raised at the Public Meeting were addressed by EPA staff. There were no significant issues or objections directed toward the selected remedy. EPA believes that the selected remedy addresses the community concerns that were identified during community interviews. The main concern was that the selected remedy should not include incineration of contaminants, which could further impact air quality conditions. The selected remedies for soil and groundwater do not include incineration of contaminants and will not adversely impact air quality; therefore, community concerns have been addressed.

11.0 Principal Threat Wastes

The NCP establishes EPA's expectation that treatment be used to address the principal threats posed by a site wherever practical. The principal threat concept applies to the source materials at a Superfund site that are highly mobile and cannot be reliably controlled in place, or would present a significant risk to human health or the environment should exposure occur. A source material is material that includes or contains hazardous substances, pollutants, or contaminants that act as a reservoir for migration of contamination to groundwater, surface water, or air or act as a source for direct exposure.

Although treatment will be applied to the VOC contaminated soil and groundwater, there are no principal threats at Cooper Drum. The VOC soil contaminants are mobile and act as a potential threat to groundwater but are low in concentration. The non-VOC soil contaminants pose a risk to human health but are not mobile and are characterized by relatively low concentrations within a confined area. Groundwater contamination at Cooper Drum is at low concentrations and not considered to be a source material. NAPLs have not been detected in the groundwater.

12.0 Selected Remedy

The remedial action for Cooper Drum addresses contaminated soil and groundwater. To remove the potential threat to human health, the selected remedy for soil (Alternative 3) uses dual phase extraction (DPE) for treatment of volatile organic compounds (VOCs) in soil. Other non-VOC soil contaminants, including semi-volatile organic compounds (SVOCs), PCBs, and lead, will be excavated for disposal. Institutional controls will be implemented to prevent exposure to soil contaminants where excavation is not feasible.

The cleanup strategy for groundwater contaminated with VOCs (Alternative 4) will use a combination of methods to achieve remedial goals and to restore the potential beneficial use of the aquifer as a drinking water source.

An ex situ treatment component, consisting of a groundwater extraction and treatment system, will be used for containment and remediation. This ex-situ treatment component will utilize presumptive technologies identified in Directive 9283.1-12 from EPA's Office of Solid Waste and Emergency Response (OSWER). Since the COCs in groundwater are volatile, one of the presumptive

technologies (GAC) will be used for treating aqueous contaminants in the extracted ground water.

In situ chemical treatment - reductive dechlorination and/or oxidation - will also be used to enhance the treatment of VOCs in groundwater and to minimize the need for extraction and ex situ treatment.

The actual technologies and sequence of technologies used will be determined during remedial design (RD). Final selection of these technologies will be based on the outcome of treatability studies to be performed during the RD.

The EPA believes the selected remedy for Cooper Drum meets the threshold criteria and provides the best balance of tradeoffs among the alternatives considered. The EPA expects the selected remedy to satisfy the statutory requirements of CERCLA Section 121(b): 1) protection of human health and the environment: 2) compliance with ARARs; 3) cost effectiveness; 4) use of permanent solutions and alternative treatment technologies to the maximum extent practicable; and 5) use of treatment as a principle component.

12.1 Summary of the Rationale for the Selected Remedy

The principal factors considered in choosing the selected remedy for soil are:

1) VOCs in soil are mobile but are low level threats to human health since they exist at relatively low concentrations and can be contained;

2) DPE, an enhancement of the presumptive remedy of soil vapor extraction (SVE), can be used to simultaneously treat the VOCs in the soil and in the perched aquifer which starts at about 35 ft below ground surface (bgs);

3) Excavation and disposal of shallow soil will be effective because non-VOCs in shallow soil are not mobile and are localized in a confined area;

4) Use of institutional controls will eliminate/minimize the potential for exposure to any residual subsurface contamination; and

5) The selected remedy is protective of human health and environment and complies with ARARs for VOCs and non-VOCs.

The principal factors considered in choosing the selected remedy for groundwater are:

1) There is no source material or non-aqueous phase liquids (NAPLs) in the groundwater constituting a principal threat;

2) Low level extraction provides an effective means of minimizing migration of the leading edge of the contaminant plume, without further commingling of on- and off-site plumes;

3) Reinjection of a portion of the treated ground water will enhance recovery of contaminants from the aquifer and will reduce the plume commingling potential;

4) Supplemental in situ chemical treatment may expedite cleanup and reduce volume and toxicity of contaminants in place; and

5) Depending on the success of the in situ chemical treatment, monitoring may become the only action needed at Cooper Drum within 5 to 10 years if it can be demonstrated that contaminant concentrations in the groundwater plume have stabilized at reduced concentrations.

12.2 Description of the Selected Remedy

Selected Remedy for Soil

The selected remedy for soil is Alternative 3. This alternative uses DPE to treat VOCs in soil, excavation and off-site disposal to remove non-VOCs in shallow soil, and institutional controls to limit future use of Cooper Drum in areas where soil excavation is not feasible. The components of the selected remedy are as follows:

- In the former hard wash area (HWA), extract VOC contaminated soil vapor and groundwater simultaneously using dual phase extraction (DPE) technology. Treat the extracted soil vapor and groundwater using vapor and liquid phase carbon in vessels at an on-site treatment plant.

- After removal of VOCs, discharge the treated soil vapor into the air. The treated water will be reinjected into the aquifer or discharged to the public sewer system operated by the Los Angeles County Sanitation District.

The total duration of the DPE remedial action is projected to be five years. Actual operation of the DPE system is estimated to be two years. It is assumed that vapor monitoring wells and groundwater extraction wells would continue to be sampled for at least three more years to ensure remedial action goals have been met.

- Conduct additional soil gas sampling in the drum processing area (DPA) during the remedial design (RD) phase to further identify the extent of VOC contamination and the need for remediation using dual phase extraction in this area.

- In the HWA and DPA, excavate an estimated 2,700 tons of non-VOC contaminated shallow soil (estimated down to five feet in depth) for disposal at an approved off-site facility. Use clean soil to backfill excavated areas.

- Conduct additional soil sampling in the DPA and HWA during the RD phase to further define the extent of non-VOC contamination and the need for remediation beyond the estimated 2,700 tons of soil.

- Implement institutional controls for soil contaminated with non-VOCs in areas where excavation is not feasible, such as under existing structures, by requiring the execution and recording of a restrictive covenant which will limit activities that might expose the

subsurface and would prevent future use, including residential, hospital, day care center and school uses, as long as contaminated soil remains on site.

The objectives of institutional controls for Cooper Drum are:

1) To provide notification to all potential future site users of the presence of hazardous materials (soil contaminated with non-VOCs) in those areas of Cooper Drum where excavation was not feasible.

2) To minimize the potential for exposure of future site users to contaminated soils left on site after completion of this Remedial Action.

3) To prevent disturbance of contaminated soils left on site after completion of this Remedial Action by drilling or construction in contaminated areas.

4) To expressly prohibit residential land use on any part of Cooper Drum and limit future uses of Cooper Drum to commercial and industrial activities unless, and until all contaminated soil left on Site after the completion of this Remedial Action has been treated to safe residential levels or excavated and removed from Cooper Drum.

To achieve these objectives, EPA intends to require the legal owners of Cooper Drum to execute and record a restrictive covenant addressing these objectives. The restrictive covenant shall run with the land and be enforceable under California law (including California Civil Code Section 1471) against all present and future property owners and tenants. EPA and/or the State of California DTSC (the State) shall oversee compliance with the use restrictions.

The land use restrictions in the restrictive covenant shall include compliance with all the following provisions:

a) Construction not approved by EPA or the State that impacts contaminated soils left in place shall not occur.

b) No new openings shall be made in floor slabs in buildings or structures overlying contaminated soils left in place without the prior written approval of EPA or the State.

c) The integrity of existing foundations shall be maintained in areas underlain by contaminated soils left in place. All cracks or other damage in such foundations shall be reported to EPA or the State.

d) Present and future owners of Cooper Drum or any portion thereof shall disclose all institutional controls to all tenants on the property.

e) Present and future owners of Cooper Drum or any portion thereof shall inform EPA or the State of the identities of all tenants on the property.

f) Contaminated soils left on site shall not be excavated without the written approval and supervision of EPA or the State.

g) No portion of Cooper Drum shall be used or redeveloped for residential use, used as a hospital, day care center or school unless and until contaminated soils left on site have been treated to safe levels for such uses or excavated and removed from Cooper Drum as certified by EPA or the State. When and if, through excavation of soils or otherwise, the entire site is rendered safe for unrestricted use, EPA and/or the State will consider removal of the restrictive covenant from the chain of title to the property comprising Cooper Drum.

Selected Remedy for Groundwater

The selected remedy is groundwater Alternative 4. This alternative consists of extracting VOC-contaminated groundwater and treating it with liquid-phase activated carbon. In situ chemical treatment - reductive dechlorination or chemical oxidation - would be used to expedite and enhance treatment, and to reduce the volume of extracted water. The various components of the selected remedy are:

- Extract groundwater contaminated with VOCs and treat it using liquid-phase activated carbon in vessels at an on-site treatment system. Containment will be provided at the downgradient extent of contamination.

- The treated water will be reinjected into the contaminated groundwater aquifer or discharged to the public sewer system operated by the Los Angeles County Sanitation District. Reinjection will reduce the intrusion of and the potential for mixing with other off-site VOC plumes.

- Use in situ chemical treatment, either reductive dechlorination or chemical oxidation, to enhance remediation of VOC-contaminated groundwater. During the remedial design (RD) phase, conduct treatability studies to evaluate both methods and determine which works best under site conditions. Data obtained from pilot studies will also be used to determine the specific number and placement of in situ injection points.

- Conduct additional groundwater sampling during the RD phase to further define the downgradient extent of the VOC contamination.

- Conduct groundwater monitoring to evaluate the effectiveness of the remedy, the location of the plume, and that remediation goals have been met.

Continue groundwater monitoring for a period of three years after the monitoring demonstrates that remediation goals have been met. The projected time to reach remedial action goals is 20 years. However, the actual time required for cleanup may be reduced if the in situ chemical treatment is effective. Depending on the success of in situ chemical treatment, monitoring may become the only action needed at Cooper Drum within 5-10 years. For example, in situ chemical treatment may provide a relatively fast reduction of the contaminant mass in the ground water plume. This mass reduction could lead to stabilization of low contaminant concentrations to the point that containment with extraction wells may no longer be necessary.

12.3 Summary of the Estimated Remedy Costs

The estimated costs for the selected remedy are presented in four tables. Tables 12-1 and 12-2 are cost estimate summary tables for the selected remedy for soil and groundwater, respectively. These tables present the subtotal capital and O&M costs associated with different components of the selected remedy, the subtotal discounted costs, and the total present worth costs for implementation of the remedy. Tables 12-3 and 12-4 list the annual and total present worth cost estimates for the selected remedy for soil and groundwater, respectively.

Uncertainty in Cost Estimates

All assumptions used in calculating the cost estimates are listed in the table footnotes and as follows:

- A remedial action start date of 2003 was assumed in the cost calculations; however, actual start date may be later.
- Overall duration of remedial action was assumed to be 20 years.
- Undiscounted costs were estimated in 2001 dollars.
- A 7% discount rate was used in the present worth analysis.

The major sources of uncertainty in the cost estimates include:

- The treatment technologies: the actual technologies and sequence of technologies used will be determined during remedial design (RD). Final selection of these technologies will be based on the outcome of treatability studies to be performed during the RD.
- The amount of soil that will be excavated and disposed to landfill.
- The number of extraction and injection wells.
- The number of injection points and the amount of chemical reagent needed.
- The amount of water that will be discharged to POTW.
- The extent and duration of monitoring.
- The duration of remedial action.

The cost summary tables are based on the best available information regarding the anticipated scope of the remedial action. Changes in the cost elements are likely to occur as a results of the new information and data collected during the remedial design phase. Major changes may be documented in the form of a memorandum to the Administrative Record file, an ESD, or a ROD amendment. The projected cost is based on an order-of-magnitude engineering cost estimate that is expected to be within +50 or -30 percent of the actual project cost.

Table 12-1
Cost Estimate Summary for the Selected Remedy for Soil

Description	Cost
CAPITAL COSTS	
DPE and vapor monitoring well installation [a]	$286,557
GAC treatment system installation	$27,788
Piping installation	$42,940
Institutional controls	**$8,290**
Soil excavation	$308,237
Soil transportation and disposal to Class I landfill	$872,760
Subtotal (Construction)	**$1,546,572**
Subtotal (Discounted) [b]	**$1,414,730**
Bid contingencies (5% of discounted)	$71,000
Scope contingencies (20% of discounted)	$283,000
Engineering Design (5% of total)	$88,000
Bonding and insurance of construction workers (3% of total)	$53,000
Field and laboratory testing during construction (1% of total)	$18,000
Reporting during construction (1% of total)	$18,000
TOTAL CAPITAL COST (Discounted) [b]	**$1,945,730**
OPERATIONS AND MAINTENANCE COSTS	
Extraction wells	$91,646
Treatment system	$34,282
Discharge piping	$53,024
SVE treatment system and well monitoring	$702,488
Institutional controls	$49,580
Subtotal O&M	**$931,020**
Subtotal O&M (Discounted) [b]	**$823,929**
TOTAL PRESENT VALUE	**$2,769,659**

Notes: Undiscounted costs are based on 2001 dollars and were estimated using RACER™, with an accuracy of -30% to +50%. Costs were based on a 20-year overall duration for remedial action (including 2 years of dual phase extraction, 3 years of compliance monitoring, and 20 years of institutional controls).

a Assumed start date for cost estimating purposes is January 2003. Actual start date may be later.
b A 7% discount rate was assumed.

Table 12-2
Cost Estimate Summary

Description	Cost
CAPITAL COSTS	
Reductive dechlorination (2003) [a,b]	$1,333,494
In situ oxidation (2004)	$304,272
Extraction well and piping installation	$119,731
Treatment system facilities	$47,797
Discharge piping	$6,399
Injection well installation	$31,188
Monitoring well installation	$106,433
Subtotal (Construction)	**$1,949,314**
Subtotal (Discounted) [c]	**$1,783,140**
Bid Contingencies (5%)	$89,000
Scope Contingencies (20%)	$357,000
Total Construction	**$2,229,140**
Engineering Design (5% of total)	$111,000
Bonding and insurance of construction workers (3% of total)	$67,000
Field and laboratory testing during construction (1% of total)	$22,000
Reporting during construction (1% of total)	$22,000
Total Capital Cost	**$2,451,140**
OPERATIONS AND MAINTENANCE COSTS	
Extraction wells	$274,231
Treatment system [d]	$460,069
Injection wells	$140,333
Well monitoring	$2,072,990
Treatment system monitoring	$1,841,781
Subtotal O&M	**$4,789,404**
Subtotal O&M (Discounted) [e]	**$2,912,577**
TOTAL PRESENT VALUE	**$5,363,717**

Notes: Undiscounted costs are based on 2001 dollars and were estimated using RACER™, with an accuracy of -30% to +50%. Costs were based on a 20-year duration for remedial action, plus 3 additional years for compliance monitoring.

a For cost estimating purposes, it was assumed that Hydrogen Release Compound (HRC®) would be used.

b A start date of March 2003 was used in the cost calculations. The actual start date may be later.

c A 7% discount rate was assumed.

d The O&M costs include the cost of discharge of half the water to injection wells and the remainder to POTW.

Table 12-3
Present Worth Cost Analysis for the Selected Remedy for Soil

Year [a]	Capital Cost	O&M Cost [b]	Inflation [c]	Discount Rate [d]	Inflation Discounted [e]	Present Worth Cost [f]
0	$1,945,730		Included	Included	Included	$1,945,730
1		$607,995	1.0473	0.8734	0.9148	$556,165
2		$260,526	1.0699	0.8163	0.8734	$227,532
3		$11,420	1.0934	0.7629	0.8341	$9,526
4		$6,947	1.1175	0.7130	0.7968	$5,535
5		$6,947	1.1421	0.6663	0.7610	$5,287
6		$2,479	1.1673	0.6227	0.7269	$1,802
7		$2,479	1.193	0.5820	0.6943	$1,721
8		$2,479	1.2194	0.5439	0.6633	$1,644
9		$2,479	1.2463	0.5083	0.6336	$1,571
10		$2,479	1.2734	0.4751	0.6050	$1,500
11		$2,479	1.3006	0.4440	0.5775	$1,432
12		$2,479	1.3278	0.4150	0.5510	$1,366
13		$2,479	1.3549	0.3878	0.5255	$1,303
14		$2,479	1.3821	0.3624	0.5009	$1,242
15		$2,479	1.4093	0.3387	0.4774	$1,183
16		$2,479	1.4365	0.3166	0.4548	$1,127
17		$2,479	1.4636	0.2959	0.4330	$1,073
18		$2,479	1.4908	0.2765	0.4122	$1,022
19		$2,479	1.518	0.2584	0.3923	$ 972
20		$2,479	1.5451	0.2415	0.3732	$925
Total present worth cost				**$2,769,659**		

Notes: Costs were estimated using RACER™, with an accuracy of -30% to +50%.

a Costs were based on a 20-year duration for remedial action.

b O&M costs associated with treatment and monitoring are included for the first five years of remedial action. The O&M costs for remaining years are associated with institutional controls. These costs may be eliminated if institutional controls are limited to ensuring the subsurface is not disturbed or accessed (i.e., if no pavement repairs are implemented).

c Inflation was accounted for because undiscounted costs were based on 2001 dollars. Assumed start date of remedial action was 1 January 2003 but actual start date may be later.

d A discount rate of 7% was used.

e This value is the product of the inflation rate and the discount rate.

f This value is calculated by multiplying the "inflation discounted" by the O&M cost.

Table 12-4
Present Worth Cost Analysis for the Selected Remedy for Groundwater

Year [a]	Capital Cost	O&M Cost	Inflation [b]	Discount Rate [c]	Inflation Discounted [d]	Present Worth Cost [e]
0	$2,451,140		Included	Included	Included	$2,451,140
1		$ 288,250	1.0473	0.8734	0.9148	$ 263,677
2		$ 243,860	1.0699	0.8163	0.8734	$ 212,977
3		$ 230,336	1.0934	0.7629	0.8341	$ 192,135
4		$ 227,432	1.1175	0.7130	0.7968	$ 181,209
5		$ 230,336	1.1421	0.6663	0.7610	$ 175,292
6		$ 231,789	1.1673	0.6227	0.7269	$ 168,496
7		$ 227,432	1.193	0.5820	0.6943	$ 157,914
8		$ 230,336	1.2194	0.5439	0.6633	$ 152,776
9		$ 227,432	1.2463	0.5083	0.6336	$ 144,091
10		$ 237,596	1.2734	0.4751	0.6050	$ 143,742
11		$ 234,208	1.3006	0.4440	0.5775	$ 135,251
12		$ 227,432	1.3278	0.4150	0.5510	$ 125,313
13		$ 230,336	1.3549	0.3878	0.5255	$ 121,031
14		$ 227,432	1.3821	0.3624	0.5009	$ 113,929
15		$ 230,336	1.4093	0.3387	0.4774	$ 109,957
16		$ 231,789	1.4365	0.3166	0.4548	$ 105,408
17		$ 227,432	1.4636	0.2959	0.4330	$ 98,484
18		$ 230,336	1.4908	0.2765	0.4122	$ 94,949
19		$ 227,432	1.518	0.2584	0.3923	$ 89,217
20		$ 237,596	1.5451	0.2415	0.3732	$ 88,662
21		$ 72,845	1.5723	0.2257	0.3549	$ 25,852
22		$ 16,636	1.5995	0.2109	0.3374	$ 5,613
23		$ 16,636	1.6267	0.1971	0.3207	$ 5,335
24		$ 4,159	1.6538	0.1842	0.3047	$ 1,267
Total present worth cost				**$5,363,717**		

Notes: Costs were estimated using RACER™, with an accuracy of -30% to +50%.

a Costs were based on a 20-year duration for remedial action, plus three years of compliance monitoring. Assumed start date of remedial action was 1 March 2003 but actual start date may be later.
b Inflation was accounted for because undiscounted costs were based on 2001 dollars.
c A discount rate of 7% was used.
d This value is the product of the inflation rate and the discount rate.
e This value is calculated by multiplying the "inflation discounted" by the cost.

12.4 Expected Outcome of the Selected Remedy

The selected remedy for soil is expected to remove existing VOC contamination to levels that prevent impact to the aquifer below ground and the indoor air quality above ground. The soil remedy will also remove soil contaminated with non-VOCs from accessible areas to be protective of ongoing and future site uses. Restrictions on future land use, including residential, hospital, day care center and school uses, will be implemented for Cooper Drum with the understanding that excavation of all non-VOC contaminated soil beneath existing structures is deemed infeasible. Land use restrictions could be lifted if the contaminated soil beneath structures is removed or treated prior to future land development.

Cooper Drum is located in a dense urban land use setting of mixed residential, commercial, and industrial parcels. The surrounding land uses are anticipated to continue to be of mixed urban uses. The ongoing drum processing operations at Cooper Drum are considered to be a heavy industrial use for which the property is currently zoned. The City of South Gate Community Development Department is currently reevaluating land use designations and development options for the next 10 to 15 years. New zoning restrictions may be enacted to conform with any changes made to land use designations.

Future reasonably anticipated land use options for Cooper Drum include light industrial and high density commercial. Current drum processing operations could continue under a "grandfather rule" which allows for non-conforming status as long as operations are not expanded. Due to the proximity to the area where a regional high speed rail corridor may be built, it is also possible that future development for residential housing could be considered for Cooper Drum. Residential use could occur only after the selected remedy for soil is completed and residual non-VOC contamination above action levels is removed from beneath structures.

The contaminated groundwater under Cooper Drum is semi-confined in the upper aquifer and characterized as shallow groundwater of poor quality water (e.g. due to high background levels of arsenic, sulfate, chloride and total dissolved solids). Although the upper aquifer is not currently used as a drinking water source, Cooper Drum is located within a groundwater basin (the Central Basin) that is designated by the Water Quality Control Plan for the Los Angeles Region (the Basin Plan) as having beneficial uses for drinking water, agricultural, industrial processes, and industrial services. There are no other potential beneficial uses associated with groundwater in the upper aquifer underlying Cooper Drum. The potential for on-site residential land use, which includes groundwater at Cooper Drum being used as a drinking water source, is the most conservative scenario used as a basis for the reasonable exposure assessment assumptions and risk characterization conclusions that prompted the remedial action objectives for Cooper Drum. Once implemented, the selected remedy for groundwater will protect the existing beneficial uses of the currently uncontaminated deeper aquifers (starting with the Exposition Aquifer) and will remove VOC contamination above drinking water standards in the upper (shallow) aquifer.

Cleanup Levels for Soil and Groundwater

The cleanup levels for contaminated soil and groundwater for Cooper Drum are listed in Table 12-5.

Soil VOCs

The cleanup levels for VOCs in soil are to be determined (TBD) based on the remedial goal, which is to prevent the vertical migration of leachate at concentrations that would impact the shallow aquifer above drinking water standards (MCLs). To evaluate attainment of this goal, performance evaluation soil gas samples will be collected during remediation (soil vapor extraction). The sampling results will then be used in the VLEACH model to evaluate impact to groundwater. The soil gas sample analytical results will also be input into the Johnson & Ettinger Model (which estimates indoor air concentration) to ensure that residual VOC concentrations remaining in soil (after soil vapor extraction) are protective of potential indoor air receptors.

Soil Non-VOCs

The polycyclic aromatic hydrocarbon (PAH) cleanup level for soil is based on the upper tolerance limit (UTL) background Benzo(a)pyrene-toxicity equivalent (B(a)P-TE) concentration for the southern California PAH data set which is 900 µg/kg B(a)P-TE. The detected PAH concentrations in each confirmation sample will be multiplied by the applicable toxicity equivalency factors (TEF) and summed to generate a B(a)P-TE value. The B(a)P-Te will be calculated using TEF values recommended by DTSC (as noted in parentheses) for each of the following PAHs:

- Benzo(a) anthracene (0.1)
- Benzo(a)pyrene (1.0)
- Benzo(b) fluoranthene (0.1)
- Benzo(k) fluoranthene (0.1)
- Chrysene (0.01)
- Dibenz(a,h)anthracene (0.34)
- Indeno(1,2,3-cd) pyrene (0.1)

The PCB cleanup goal of 870 µg/kg for soil was back-calculated by applying the same residential exposure parameters used in the site HHRA for Cooper Drum (See Appendix L, Cooper Drum RI/FS Report, URS, 2002) and a target health risk level of 1 in 100,000 (1.0e-05).

The lead cleanup goal of 400 ppm is based on the Integrated Exposure Uptake Biokinetic Model for Lead in Children (IEUBK) for residential use.

Groundwater VOCs

The cleanup levels for VOCs in groundwater are the California primary drinking water standards (MCLs). Since no MCL has been established for 1,2,3-TCP, the practical quantitation limit (PQL) will be used.

Table 12-5
Cleanup Levels for Contaminants of Concern

Medium	Contaminant of Concern	Cleanup Level	Basis for Clean up Level	Risk at Cleanup Level
Soil (VOCs)	1,1-Dichloroethane (1,1-DCA)	Leachate <MCL[a]	VLEACH modeling	TBD
	1,1-Dichloroethene (1,1-DCE)	Leachate <MCL	VLEACH modeling	TBD
	1,2-Dichloroethane (1,2-DCA)	Leachate <MCL	VLEACH modeling	TBD
	1,2-Dichloropropane (1,2-DCP)	Leachate <MCL	VLEACH modeling	TBD
	1,2,3-Trichloropropane (1,2,3-TCP)	Leachate <PQL	VLEACH modeling	TBD
	Benzene	Leachate <MCL	VLEACH modeling	TBD
	cis-1,2-Dichloroethene (cis-1,2-DCE)	Leachate <MCL	VLEACH modeling	TBD
	trans-1,2-Dichloroethene (trans-1,2-DCE)	Leachate <MCL	VLEACH modeling	TBD
	Tetrachloroethene (PCE)	Leachate <MCL	VLEACH modeling	TBD
	Trichloroethene (TCE)	Leachate <MCL	VLEACH modeling	TBD
	Vinyl chloride	Leachate <MCL	VLEACH modeling	TBD
Soil (nonVOCs)	Aroclor-1254	870 µg/kg	Human health hazard	1 e-05
	Aroclor-1260	870 µg/kg	Human health hazard	1 e-05
	B (a)P-TE [b] - Benzo(a)anthracene - Benzo(a)pyrene - Benzo(b)fluoranthene - Benzo(k)fluoranthene - Chrysene - Dibenz(a,h)anthracene - Indeno(1,2,3-cd)pyrene	900 µg/kg	Background	Background
	Lead	400 mg/kg	Human health hazard	IEUBK Model
Groundwater (VOCs)	1,1-Dichloroethane (1,1-DCA)	5 µg/L	MCL	Cancer risk at 2.6e-06
	1,1-Dichloroethene (1,1-DCE)	6 µg/L	MCL	HI = 0.04
	1,2-Dichloroethane (1,2-DCA)	0.5 µg/L	MCL	Cancer risk at 4.0e-06
	1,2-Dichloropropane (1,2-DCP)	5 µg/L	MCL	Cancer risk at 3.1e-05
	1,2,3-Trichloropropane (1,2,3-TCP)	1 µg/L	PQL [c]	Cancer risk at 6.2e-04
	Benzene	1 µg/L	MCL	Cancer risk at 9.0e-06
	cis-1,2-Dichloroethene (cis-1,2-DCE)	6 µg/L	MCL	HI = 0.23
	trans-1,2-Dichloroethene (trans-1,2-DCE)	10 µg/L	MCL	HI = 0.19
	Tetrachloroethene (PCE)	5 µg/L	MCL	Cancer risk at 1.2e-05
	Trichloroethene (TCE)	5 µg/L	MCL	Cancer risk at 4.9e-06
	Vinyl chloride	0.5 µg/L	MCL	Cancer risk at 2.2e-05

µg/L micrograms per liter
µg/kg micrograms per kilogram
MCL California primary maximum contaminant level
PQL Practical quantification limit
TBD To be determined
IEUBK Model - Integrated Exposure Uptake Model for Lead in Children

[a] MCLs from Title 22 California Code of Regulation Section 64431 and 64444 unless otherwise specified.
[b] Based on upper tolerance limit (UTL) background Benzo(a)pyrene-toxicity equivalent (B(a)P-TE) concentration for southern California PAH data set.
[c] No MCL established for 1,2,3-trichloropropane. The PQL was identified as a remedial goal for 1,2,3-trichloropropane.

13.0 Statutory Determination

Under CERCLA §121 and the NCP, the lead agency must select remedies that are protective of human health and the environment, comply with applicable or relevant and appropriate requirements (unless a statutory waiver is justified), are cost-effective, and utilize permanent solutions and alternative treatment technologies or resource recovery technologies to the maximum extent practicable. In addition, CERCLA includes a preference for remedies that employ treatment that permanently and significantly reduces the volume, toxicity, or mobility of hazardous wastes as a principal element and a bias against off-site disposal of untreated wastes.

13.1 Protection of the Human Health and the Environment

The selected remedy, soil Alternative 3, will protect human health and the environment through the treatment of VOC-contaminated soil by using an enhanced soil vapor extraction system (DPE treatment system) and excavation and off-site disposal of non-VOC contaminated soil. Treatment of VOC soil contaminants eliminates the potential for migration to groundwater and the threat of indirect on-site and off-site exposures via ingestion of contaminated groundwater. The selected remedy for VOCs in soil will reduce contamination so that the groundwater will meet the protective state and federal drinking water standards.

Removal of non-VOC contaminants in the soil eliminates the threat of exposure via ingestion and dermal contact by on-site human receptors. The cumulative excess carcinogenic risk from non-VOC exposure is estimated at 3.3e-04 with a non-carcinogenic HI of 3. The risks from non-VOC soil exposure will be reduced to within the EPA's target carcinogenic risk range of 10e-04 to 10e-06 and the noncarcinogenic risk (HI) to less than 1.0.

A pump-and-treat system enhanced with chemical in situ treatment will restore the contaminated aquifer for potential beneficial use as a drinking water source and prevent the existing plume from migration to deeper aquifers used as a regional drinking water source. Treatment of groundwater will eliminate the threat of exposure via ingestion and inhalation of contaminated water by on-site and off-site human receptors. The cumulative excess carcinogenic risk from exposure to groundwater contaminants is estimated at 3.3e-02 with an non-carcinogenic HI of 193. The selected remedy for groundwater will reduce contamination to meet the protective state and federal drinking water standards.

13.2 Compliance with Applicable or Relevant and Appropriate Requirements

Remedial actions selected under CERCLA must comply with ARARs under federal environmental laws or, where more stringent than the federal requirements, state environmental or facility siting laws. Where a State has been delegated authority to enforce a federal statute, such as RCRA, the delegated portions of the statute are considered to be a federal ARAR unless the state law is broader or more stringent than the federal law.

The ARARs are identified on a site-specific basis from information about site-specific chemicals, specific actions that are being considered, and specific site location features. There are three categories of ARARs: 1) chemical-specific requirements, 2) location-specific requirements, and 3) action specific requirements. Where there are no chemical-, location-, or action-specific ARARs, EPA may consider non-promulgated federal or state advisories and guidance as to-be-considered (TBC) criteria. Although consideration of a TBC criteria is not required, standards based on TBCs are legally enforceable as performance standards.

Chemical-specific ARARs are risk-based standards or methodologies that may be applied to site-specific conditions and result in the development of cleanup levels for the COCs at Cooper Drum.

Location-specific ARARs are restrictions placed on the chemical contaminant or the remedial activities based on a geographic or ecological features. Examples of features include wetlands, floodplains, sensitive ecosystems and seismic areas.

Action-specific ARARs are usually technology- or activity-based requirements. They are triggered by the particular remedial activities selected to accomplish a remedy.

A summary of ARARs and TBC criteria for the selected remedy are presented in Table 13-1.

Table 13-1
ARARs for Selected Remedy

Authority	Medium	Legal Authority	Status	Synopsis of Requirement	Actions to be Taken to Attain Requirement
CHEMICAL-SPECIFIC ARARs					
Federal Regulatory Authority	Groundwater	Federal Primary Drinking Water Standards 40 CFR Part 141	Relevant and appropriate	Federal drinking water standards protect the public from contaminants that may be found in drinking water. The groundwater underlying Cooper Drum is a potential source of drinking water.	The selected remedy will use federal MCLs, unless State MCLs are more stringent, as cleanup levels for VOCs in groundwater and to protect groundwater from soil contaminants.
State Regulatory Authority	Groundwater	California Primary Drinking Water Standards H&S Code §4010 et seq. 22 CCR §64431 and 64444	Relevant and appropriate	California drinking water standards protect public health from contaminants found in drinking water sources. The groundwater underlying Cooper Drum is a potential source of drinking water.	The selected remedy will use state MCLs more stringent than federal MCLs as cleanup levels for VOCs in groundwater and to protect groundwater from soil contaminants.
State Regulatory Authority	Groundwater	Basin Plan for Los Angeles Region California Water Code §13240 et seq.	Relevant and appropriate	Establishes beneficial uses of ground and surface waters, establishes water quality objectives, including narrative and numerical standards, establishes implementation plans to meet water quality objectives and protect beneficial uses, and incorporates statewide water quality control plans and policies. The WQOs for groundwater are based on the primary MCLs.	The selected remedy will use the most stringent state or federal MCLs as cleanup levels for VOCs in groundwater and to protect groundwater from soil contaminants.
State Regulatory Authority	Groundwater	SWRCB Resolution No. 92-49 Policy and Procedures for Investigation and Cleanup and Abatement of Discharges under California Water Code §13304 (amended 4\21\94) California Water Code §13307 23 CCR §2550.4	Relevant and appropriate	To protect groundwater, the resolution requires cleanup to either background water quality or the best water quality that is reasonable if background water quality cannot be restored. Non-background cleanup levels must be consistent with maximum benefit to the public, present and anticipated future beneficial uses, and conform to water quality control plans and policies.	Groundwater at Cooper Drum will be cleaned up to MCLs for VOCs or to attain the best water quality that is reasonable, e.g. 1 ppb for 1,2,3-TCP which is the chemical detection limit.

Table 13-1
ARARs for Selected Remedy

Authority	Medium	Legal Authority	Status	Synopsis of Requirement	Actions to be Taken to Attain Requirement
LOCATION-SPECIFIC ARARS					
State Regulatory Authority	Soil and groundwater	Prohibition-Destruction of Bird Eggs and Nests Fish & Game Code §3503	Applicable	This law prohibits take, possession, or needless destruction of any bird nests and eggs, except as provided by the Fish and Game Code or regulations.	Project construction of the selected remedy will not result in a 'take' and will comply with this requirement.
State Regulatory Authority	Soil and groundwater	Non-Game Animals Fish & Game regulations 14 CCR §472	Applicable	Regulation provides that nongame birds and mammals may not be taken except for English sparrow, starling, coyote, weasels, skunks, opossum, moles, and rodents (excludes tree and flying squirrels, and those listed as furbearers, endangered, or threatened species); and American crows.	Project construction of the selected remedy will not result in a 'take' and will comply with this requirement.
ACTION-SPECIFIC ARARS					
Federal Regulatory Authority	Groundwater	NPDES Non-Point Source Discharge 40 CFR §122.26	Relevant and appropriate	Nonpoint sources address using best management practices for control of contaminants to stormwater run-off from construction activities on sites greater than 1 acre.	Since alternatives that evaluate soil excavation are confined to less than 1 acre, the requirement is not applicable but is relevant and appropriate. BMPs will be established to prevent stormwater run-off.
State Regulatory Authority	Groundwater	Basin Plan for Los Angeles Region Chapter 4 - Remediation of Pollution	Relevant and appropriate	The Basin Plan recognizes the cleanup goals based on the State's Antidegradation Policy as set forth in State Board Resolution No. 68-16. Under the Antidegradation Policy, whenever the existing quality of water is better than that needed to protect present and potential beneficial uses, such existing quality will be maintained.	Antidegradation requirements obligates EPA to prevent further degradation of the water during and at completion of the cleanup action for reinjection of treated groundwater to the aquifer and chemical injection to the aquifer to facilitate reductive dechlorination and oxidation. Any reinjection or chemical injection will be conducted in the plume to prevent further degradation where possible. The selected remedy will comply with the substantive RWQCB waste discharge requirements (WDRs) for chemical injection and reinjection.

Table 13-1
ARARs for Selected Remedy

Authority	Medium	Legal Authority	Status	Synopsis of Requirement	Actions to be Taken to Attain Requirement
State Regulatory Authority	Groundwater	Water Quality Control Plan (Basin Plan) for Los Angeles Region (adopted 9\09\00) California Water Code §13240 et seq.	Relevant and appropriate	Presents numerical and narrative water quality objectives for maintaining a high quality of protection for the inland surface water and groundwater in the region. Groundwater underlying Cooper Drum has been identified by the Basin Plan as a potential drinking water aquifer.	Relevant to treated groundwater re-injection to the aquifer and soil cleanup to protect groundwater quality. Reinjection of treated VOC-contaminated groundwater will meet State and Federal MCLs. Soil VOC cleanup levels based on protection of groundwater quality for drinking water.
State Regulatory Authority	Groundwater	Non-Degradation Policy SWRCB Resolution No. 68-16 Water Code §13140	Applicable	Requires maintaining the existing water quality using best practicable treatment technology unless a demonstrated change will benefit the people of California, will not unreasonably affect present or potential uses, and will not result in water quality less than that prescribed in other state policies. Determination is made through a two-step process to determine (1) whether further degradation may be allowed, and (2) the discharge level which will result in the best practicable treatment or control of the discharge.	Antidegradation requirements will be addressed to prevent further degradation of the water during and at completion of the cleanup action. for reinjection of treated groundwater. Any reinjection or chemical injection will be conducted in the plume to prevent further degradation where possible. The selected remedy will comply with the substantive RWQCB WDRs for chemical injection and reinjection.
State Regulatory Authority	Soil	California Water Code §13140 - 13147, 13172, 13260, 13263, 132267, 13304 27 CCR Div.2, Subdiv.1, Chap.3, Subchap.2, Art.2	Applicable	Wastes classified as a threat to water quality (designated waste) may be discharged to a Class I hazardous waste or Class II designated waste management unit. Nonhazardous solid waste may be discharged to a Class I, II, or III waste management unit. Inert waste would not be required to be discharged into a SWRCB-classified waste management unit.	Waste will be classified for disposal to appropriate permitted off-site waste management units. CERCLA waste (e.g., contaminated soil, IDW, spent GAC) would be disposed at a off-site disposal facility.
State Regulatory Authority	Groundwater	Sources of Drinking Water SWRCB Resolution No. 88-63	Applicable	This policy specifies that ground and surface waters of the state are either existing or potential sources of municipal and domestic supply.	The requirement establishes groundwater underlying Cooper Drum as a potential source for drinking water. The selected remedy will apply a groundwater cleanup level protective of drinking water.

Table 13-1
ARARs for Selected Remedy

Authority	Medium	Legal Authority	Status	Synopsis of Requirement	Actions to be Taken to Attain Requirement
State Regulatory Authority	Soil and groundwater	Hazardous waste regulations Identification and Listing of Hazardous Waste 22 CCR Div. 4.5, Chap. 11 22 CCR §66264.13 22 CCR §66260.200	Applicable	A generator must determine if the waste is classified as a hazardous waste in accordance with the criteria provided in these requirements.	The selected remedy will comply with the waste classification requirements to determine proper disposal of waste. Waste characteristics of treated soil and groundwater will be defined prior to treatment and disposal.
State Regulatory Authority	Soil and groundwater	Hazardous waste regulations Standards Applicable to Generators of Hazardous Waste 22 CCR Div. 4.5, Chap. 12	Relevant and appropriate	Establishes waste storage timeframes on site. The purpose of the 90-day storage limit is to prevent creating a greater environmental hazard than already exists at Cooper Drum.	Waste contained on site will be maintained in a container in good conditions prior to off-site disposal.
State Regulatory Authority	Soil and groundwater	Hazardous waste regulations Hazardous Waste Security 22 CCR §66264.14	Relevant and appropriate	A treatment facility should maintain a fence in good repair which completely surrounds the active portion of the facility. A locked gate at the facility should restrict unauthorized personnel entrance. The security standards to prevent entry from unauthorized personnel for the proposed remedial treatment alternatives should be applied.	The selected remedy will comply with the security requirements around the treatment plant.

Table 13-1
ARARs for Selected Remedy

Authority	Medium	Legal Authority	Status	Synopsis of Requirement	Actions to be Taken to Attain Requirement
State Regulatory Authority	Soil and groundwater	Hazardous waste regulations Hazardous Waste Facility General Inspection Requirements and Personnel Training 22 CCR §66264.15 - 66264.16	Relevant and appropriate	The hazardous waste facility standards require routine facility inspections conducted by trained hazardous waste facility personnel. Inspections are to be conducted at a frequency to detect malfunctions and deterioration, operator errors, and discharges which may be causing or leading to a hazardous waste release and a threat to human health or the environment.	The treatment system will comply with this requirement and provide treatment system inspections for malfunctions and deterioration.
State Regulatory Authority	Soil and groundwater	Hazardous waste regulations Preparedness and Prevention 22 CCR Div. 4.5, Chap. 14, Art. 3	Relevant and appropriate	Facility design and operation to minimize potential fire, explosion, or unauthorized release of hazardous waste.	The selected remedy will comply with the design requirements.
State Regulatory Authority	Groundwater	Hazardous waste regulations Water Quality Monitoring and Response Systems for Permitted Systems 22 CCR Div. 4.5, Chap. 14, Art. 6	Relevant and appropriate	The requirements present the groundwater monitoring system objectives and standards to evaluate the effectiveness of the corrective action program (remedial activities). After completion of the remedial activities and closure of the facility, groundwater monitoring will continue for an additional three years to ensure attainment of the remedial action objectives.	The selected remedy will comply with these requirements by monitoring to demonstrate all the COCs concentrations are reduced to levels below cleanup levels.
State Regulatory Authority	Soil and groundwater	Hazardous waste regulations Closure and Post-Closure 22 CCR Div. 4.5, Chap. 14, Art. 7	Relevant and appropriate	The closure and post-closure requirements establish standards to minimize maintenance after facility closure to protect human health and the environment. The closure and post-closure requirements may be dependent upon the treatment alternatives.	The selected remedy will comply with these requirements. Specific closure conditions of the treatment facilities will be provided in a site closure report after completion of the remedial action.

Table 13-1
ARARs for Selected Remedy

Authority	Medium	Legal Authority	Status	Synopsis of Requirement	Actions to be Taken to Attain Requirement
State Regulatory Authority	Soil and groundwater	Hazardous waste regulations Use and Management of Containers 22 CCR Div. 4.5, Chap. 14, Art. 9	Relevant and appropriate	Maintain container and dispose to a Class I hazardous waste disposal facility within 90 days. The 90-day storage limit prevents greater environmental hazard than already exists. Maintaining the containers in good conditions at all times and not creating an environmental hazard is relevant and appropriate.	Storage of investigation-derived waste (i.e., soil cuttings from well development) will occur. Requirements may apply for the storage of contaminated groundwater and sediments trapped by the bag filter during start-up operation. Waste contained on site will be maintained in a container in good condition prior to off-site disposal.
State Regulatory Authority	Groundwater	Hazardous waste regulations Tank Systems 22 CCR Div. 4.5, Chap. 14, Art. 10	Relevant and appropriate	Minimum design standards (i.e., shell strength, foundation, structural support, pressure controls, seismic considerations) for tank and ancillary equipment are established. The requirements for minimum shell thickness and pressure controls to prevent collapse or rupture prevents a greater environmental hazard than already exists.	The selected remedy will comply and treatment system design requirements not to create an environmental hazard greater than already exists.
State Regulatory Authority	Soil and groundwater	Hazardous waste regulations Miscellaneous Units 22 CCR Div. 4.5, Chap. 14, Art. 16 22 CCR §66264.601 - 66264.603	Relevant and appropriate	Minimum performance standards are established for miscellaneous equipment to protect health and the environment. "Miscellaneous unit" are units that are not a container, tank, surface impoundment, pile, land treatment unit, landfill, incinerator, boiler, industrial furnace other than industrial furnaces (i.e., injection wells, treatment system).	None of the COCs are classified as hazardous waste. The selected remedy will comply with those environmental performance standards to protect human health and the environment in the treatment system design and construction.
State Regulatory Authority	Air	South Coast Air Quality Management District (SCAQMD) Rules and Regulations Regulation IV, Rule 402, Nuisance.	Applicable	A person shall not discharge from any source whatsoever such quantities of air contaminants or other material which cause injury, detriment, nuisance, or annoyance to any considerable number of persons or to the public or which endanger the comfort, repose, health, or safety of any such persons or the public or which cause to have a natural tendency to cause injury or damage to business or property.	The selected remedy will provide short- and long-term emission control measures during construction and O&M to prevent impacts to the public.

Table 13-1
ARARs for Selected Remedy

Authority	Medium	Legal Authority	Status	Synopsis of Requirement	Actions to be Taken to Attain Requirement
State Regulatory Authority	Air	South Coast Air Quality Management District (SCAQMD) Rules and Regulations Regulation IV, Rule 403, Fugitive Dust	Applicable	Emissions of fugitive dust shall not remain visible in the atmosphere beyond the property line of the emission source. Activities conducted in the South Coast Air Basin shall use best available control measures to minimize fugitive dust emissions and take necessary steps to prevent the track-out of bulk material onto public paved roadways as a result of their operations.	The selected remedy will provide short- and long-term fugitive emission control measures during construction and O&M to prevent impacts to the public
State Regulatory Authority	Air	South Coast Air Quality Management District (SCAQMD) Rules and Regulations Regulation IV, Rule 404, Particulate Matter – Concentration.	Applicable	Particulate matter in excess of the concentration standard conditions shall not be discharged from any source. Particulate matter in excess of 450 milligrams per cubic meter (0.196 grain per cubic foot) in discharged gas, calculated as dry gas at standard conditions, shall not be discharged to the atmosphere from any source.	The selected remedy will provide emission control measures during construction and O&M to comply with these emission standards.
State Regulatory Authority	Air	South Coast Air Quality Management District (SCAQMD) Rules and Regulations Regulation IV, Rule 405, Solid Particulate Matter – Weight.	Applicable	Solid particulate matter including lead and lead compounds discharged into the atmosphere from any source shall not exceed the rates Table 450(a) of Rule 405. Nor shall solid particulate matter including lead and lead compounds in excess of 0.23 kilogram (0.5 pound) per 907 kilograms (2,000 pounds) of process weight be discharged to the atmosphere. Emissions shall be averaged over one complete cycle of operation or one hour, whichever is the lesser time period.	The selected remedy will provide emission control measures during excavation of lead contaminated soil to comply with these emission standards.

Table 13-1
ARARs for Selected Remedy

Authority	Medium	Legal Authority	Status	Synopsis of Requirement	Actions to be Taken to Attain Requirement
State Regulatory Authority	Air	South Coast Air Quality Management District (SCAQMD) Rules and Regulations Regulation XIII, Rule 1303 - New Source Review	Applicable	Construction for any relocation or for any new or modified source which results in an emission increase of any nonattainment air contaminant, any ozone-depleting compound, or ammonia, must include BACT for the new or relocated source or for the actual modification to an existing source. This requirement would apply to treatment technologies with potential to emit primary pollutant(s) to the atmosphere.	The selected remedy will be designed and constructed with BACT emission control measures on the treatment system to comply with these emission standards.
State Regulatory Authority	Air	South Coast Air Quality Management District (SCAQMD) Rules and Regulations Regulation XIV, Rule 1401, New Source of Toxic Air Contaminants.	Applicable	Construction or reconstruction of a major stationary source emitting hazardous air pollutants shall be constructed with Best Available Control Technology for Toxics (T-BACT) and complies with all other applicable requirements.	The selected remedy will be designed and constructed to comply with T-BACT emission standards.
TO-BE-CONSIDERED CRITERIA					
TBC	Soil and groundwater	California Well Standards California Department of Water Resources Bulletin 74-90	To-be-considered	Provides minimum specifications for monitoring wells, extractions wells, injection wells, and exploratory borings. Design and construction specifications are considered for construction and destruction of wells and borings.	Extraction and injection well siting requirements are inappropriate for Cooper Drum because the effectiveness of the remedy is dependent upon well locations. Wells constructed for the selected remedy (e.g., extraction wells, injection wells, monitoring well, soil vapor wells) will be constructed to meet the minimum state standards.

13.3 Cost Effectiveness

In EPA's judgement, the selected remedies for soil and groundwater are cost-effective and present reasonable value. According to the NCP, a remedy is cost-effective if its costs are proportional to its overall effectiveness. The overall effectiveness of the selected remedies for soil and groundwater was demonstrated in the comparative analysis of the alternatives. The selected remedies satisfy the threshold criteria (overall protectiveness and compliance with ARARs), while scoring highly with respect to the three balancing criteria of long-term effectiveness, reduction in toxicity, mobility, and volume through treatment, and short-term effectiveness.

The overall effectiveness of the alternatives was then evaluated with respect to the respective cost estimates. Because the selected remedies for soil and groundwater provide effective and permanent solutions in a relatively short time-frame, the overall cost of implementation may be higher or lower relative to less effective alternatives.

The selected remedy for soil (Alternative 3) includes an excavation component for removal of non-VOCs in accessible areas. This is in addition to use of institutional controls which is also included in soil Alternative 2. Excavation and off-site disposal of contaminated soil reduces the volume of contamination and provides an effective and permanent remedy in a short time-frame. Implementation of institutional controls alone does not reduce the volume of contamination. Therefore, in EPA's judgement, the added cost of excavation is justified in order to effectively satisfy the threshold and balancing CERCLA criteria.

The selected remedy for groundwater (Alternative 4) includes possible use of an in situ technology combined with extraction and treatment. It is expected that use of in situ oxidation and/or reductive dechlorination will enhance destruction of VOCs in the aquifer over the short-term. When compared to use of pump-and-treat alone, addition of in situ treatment may actually result in cost savings because of the expected reduction in time, as well as the lower amount/intensity of extraction and treatment required to reach remedial action goals. For cost estimating purposes, however, no reduction in remedial action time or effort was assumed. This led to higher projected capital costs for the selected remedy as compared to pump-and-treat alone (Alternative 2). Because of the reduced extraction volume, the projected annual O&M costs were actually lower for the selected remedy. Provided the results of planned pilot-scale tests are positive, the EPA believes that use of an in situ technology in addition to pump-and-treat is more cost-effective than use of stand-alone pump-and-treat, or conversely, use of stand-alone in situ treatment (as in Alternative 6).

13.4 Utilization of Permanent Solutions and Alternative Treatment Technologies to the Maximum Extent Practicable

The EPA believes that the selected remedies for soil and groundwater represent the maximum extent to which permanent and alternative solutions can be used in a practical manner at Cooper Drum. As shown in Table 10-1, the selected remedies for soil and groundwater satisfy the threshold criteria of overall protection and compliance with ARARs, while scoring competitively with respect to the five balancing CERCLA criteria. An evaluation of the selected remedies with respect to the balancing and modifying criteria follows.

Selected Remedy for Soil (Alternative 3)

Long-term Effectiveness and Permanence: The selected remedy includes the use of dual phase extraction (DPE), an enhancement of soil vapor extraction (SVE), which is the presumptive remedy for VOCs in soil. With respect to non-VOCs, the selected remedy combines the use of excavation in accessible areas, and institutional controls in non-accessible soil areas. In comparison, Alternative 2 relies only on institutional controls.

Reduction of Toxicity, Mobility, or Volume Through Treatment: Use of extraction/DPE will permanently and effectively reduce the volume of VOC contamination in soil. Because of the mix of non-VOC contaminants, use of individual treatment methods for each component is not feasible. Excavation and off-site disposal of contaminated soil will reduce the volume of contamination in accessible soil areas. Institutional controls alone, as in Alternative 2, would only reduce mobility of non-VOCs so long as the pavement is maintained.

Short-term Effectiveness: The extraction/DPE action is expected to be completed within two years. Compared to Alternative 2, excavation and disposal of contaminated soil is expected to expedite short-term effectiveness. Appropriate health and safety measures must be adhered to during the remedial action.

Implementability: The selected remedy is technically feasible and implementable. All material and equipment is commercially available. Implementation of institutional controls will require the cooperation of the state (DTSC) and/or local government. The excavation component of the selected remedy will be readily implementable, except beneath existing structures.

Costs: The selected remedy is cost-effective.

State Acceptance: The DTSC and RWQCB have accepted the selected remedy.

Community Acceptance: The community has accepted the selected remedy.

Selected Remedy for Groundwater (Alternative 4)

Long-term Effectiveness and Permanence: The selected remedy is expected to be highly effective and permanent because it combines the use of a proven and effective ex situ technology (extraction/GAC treatment) with the use of an alternative in situ technology (chemical oxidation and/or reductive dechlorination). Pilot-scale tests are planned to ensure the effectiveness of, and aid in the design of, the in situ response action prior to full-scale implementation.

Reduction of Toxicity, Mobility, or Volume Through Treatment: The volume of contamination will be reduced through active treatment. The combination of treatments is expected to be more effective than use of either ex situ or in situ treatment alone.

Short-term Effectiveness: By including an in situ treatment component, the EPA expects to expedite the completion of remedial action. Use of lower extraction rates will reduce the potential for commingling with off-site plumes but will be sufficient for plume containment. Lower VOC concentrations may be observed shortly after in situ treatment. Appropriate health and safety

measures must be adhered to during the remedial action, especially when handling any oxidizing agents.

Implementability: The selected remedy is technically feasible and implementable. All material and equipment is commercially available. The EPA believes that the added implementation effort associated with in situ treatment is justified in view of the possible cost savings and increased effectiveness over the short and long term.

Costs: The selected remedy is cost-effective. The added capital cost of in situ treatment is expected to be compensated by lower annual O&M costs and shorter duration of remedial action.

State Acceptance: The DTSC and RWQCB have accepted the selected remedy.

Community Acceptance: The community has accepted the selected remedy.

13.5 Preference for Treatment as a Principal Element

There is no source material(s) posing a principal threat at Cooper Drum and EPA's statutory preference for treatment of principal threats does not apply to this site (NCP §300.430(a)(1)(iii)(A)).

However, this remedy satisfies the statutory preference for treatment as a principal element of the remedy (i.e., reduces the toxicity, mobility, or volume of hazardous substances, pollutants, or contaminants as a principal element through treatment) (NCP §300.430(f)(5)(ii)(F)). Treatment is a major component of the selected remedy for soil and groundwater. The VOC soil contaminants are a potential threat to groundwater and will be treated using DPE technology. A relatively low concentration groundwater contaminant plume will use a pump-and-treat system using GAC and chemical in situ treatment.

13.6 Five-Year Review Requirements

Because this remedy may result in hazardous substances, pollutants, or contaminants remaining on site above levels that allow for unlimited use and unrestricted exposure, and will take longer than five years to attain RAOs and cleanup levels, a policy review will be conducted within five years of construction completion for Cooper Drum to ensure that the remedy is, or will be, protective of human health and the environment.

14.0 Documentation of Significant Changes

The Proposed Plan for Cooper Drum was released for public comment in June 2002. The Proposed Plan identified soil Alternative 3 - dual phase extraction and treatment, institutional control, and excavation as the Preferred Alternative for soil remediation. Groundwater Alternative 4 - extraction and treatment with in situ chemical treatment consisting of reductive dechlorination and chemical oxidation was identified as the Preferred Alternative for groundwater remediation. EPA reviewed all written and verbal comments submitted during the public comment period. It was determined that no significant changes to the remedy, as originally identified in the Proposed Plan, were necessary or appropriate.

PART III RESPONSIVENESS SUMMARY

1.0 Stakeholder Issues and EPA Responses

After review of the Cooper Drum RI/FS Report (URS, 2002b), the DTSC raised concern regarding data gaps which have not been sufficiently defined: 1) the lateral and vertical extent of VOCs in the vadose zone beneath the drum processing building; 2) the lateral and vertical extent of non-VOCs (PCBs, PAHs, Dieldrin, and Lead) in the soil beneath the HWA and DPA; and 3) the lateral and vertical extent of VOCs in the downgradient area (beyond the Cooper Drum boundary) of the groundwater plume. The DTSC has agreed to the selected soil and groundwater remedies providing additional data is collected to address its concerns prior to implementation of the selected remedy.

During the public comment period for the Proposed Plan, no written comments were received. Questions that were raised at the Public Meeting were addressed by EPA staff. There were no significant issues or objections directed toward the selected remedy. EPA believes that the selected remedy addresses the community concerns that were identified during community interviews. The main concern was that the selected remedy should not include incineration of contaminants, which could further impact air quality conditions. The selected remedies for soil and groundwater do not include incineration of contaminants and will not adversely impact air quality; therefore, community concerns have been addressed.

2.0 Technical and Legal Issues

2.1 Technical Issues

The EPA has included the following components in the selected soil and groundwater remedy to address the DTSC concerns.

Conduct additional soil gas sampling in the drum processing area (DPA) during the remedial design (RD) phase to further identify the extent of VOC contamination and the need for remediation using dual phase extraction in this area.

Conduct additional soil sampling in the DPA and HWA during the RD phase to further define the extent of non-VOC contamination and the need for remediation beyond the estimated 2,700 tons of soil.

Conduct additional groundwater sampling during the RD phase to further define the downgradient extent of the VOC contamination (beyond the property boundary).

2.2 Legal Issues

None identified.

UNITED STATES DISTRICT COURT
CENTRAL DISTRICT OF CALIFORNIA
WESTERN DIVISION

UNITED STATES OF AMERICA, & STATE OF CALIFORNIA,	)	CIV. NO.:
Plaintiffs,	)	
v.	)	CONSENT DECREE
AC PRODUCTS, INC., et al.	)	
Defendants.	)	

Appendix B

Description of the Site

G:\38945_COOPERDRUM\GLOBAL\CAD\DRAWINGS\GW_REPORT\38945-006-C002-SITEPLAN.DWG

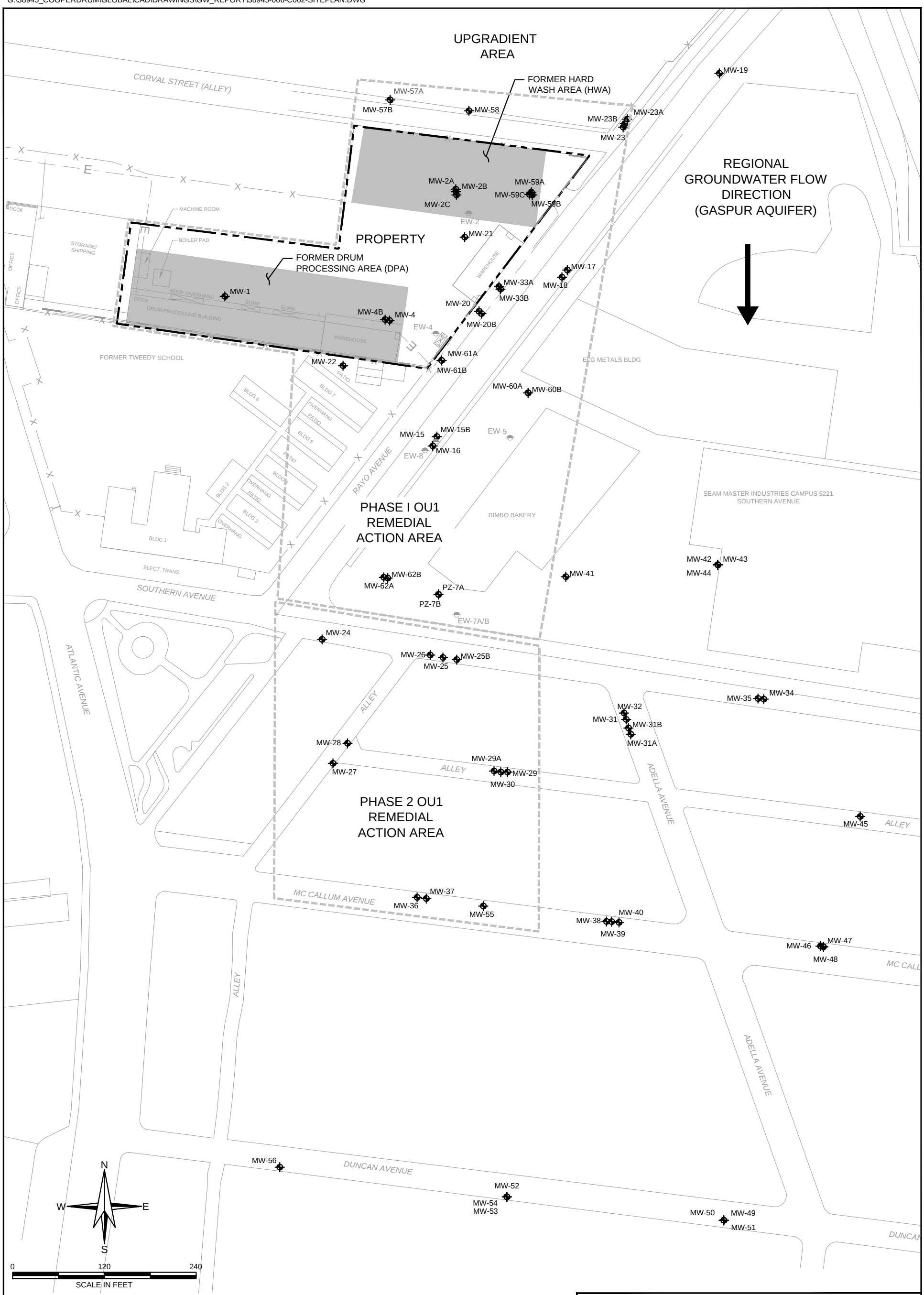

LEGEND:

- MONITORING WELL LOCATION
- EXISTING EXTRACTION WELL
- PROPERTY BOUNDARY
- BLOCK WALL

NOTES:

1. REMEDIAL ACTION AREA DIMENSIONS ARE APPROXIMATE

HALEY & ALDRICH

COOPER DRUM COMPANY SUPERFUND SITE
SOUTH GATE, CALIFORNIA

SITE PLAN

SCALE: AS SHOWN
JULY 2013

FIGURE 1

UNITED STATES DISTRICT COURT
CENTRAL DISTRICT OF CALIFORNIA
WESTERN DIVISION

UNITED STATES OF AMERICA, & STATE OF CALIFORNIA,	)	CIV. NO.:
Plaintiffs,	)	
v.	)	CONSENT DECREE
AC PRODUCTS, INC., et al.	)	
Defendants.	)	

Appendix C

Statement of Work

CONSENT DECREE STATEMENT OF WORK
FOR

REMEDIAL ACTION

AT THE

COOPER DRUM COMPANY SUPERFUND SITE
SOUTH GATE, LOS ANGELES COUNTY, CALIFORNIA

June 2015

TABLE OF CONTENTS

I. PURPOSE/INTRODUCTION 1

II. DESCRIPTION OF THE RA 5
- A. Groundwater (OU1) RA 5
  - 1. Phase 1 OU1 RA 5
  - 2. Phase 2 OU1 RA. 8
- B. Soil (OU2) Remedial Action 10
  - 1. Phase 1 OU2 RA (VOCs). Installation and Operation of DPE System for Soil Vapor and Perched Aquifer 11
  - 2. Phase 3 OU2 RA (non-VOCs). Soil Excavation and Off-Site Transport 12
  - 3. Institutional Controls 12
  - 4. Prohibited Activities. 13

III. PERFORMANCE STANDARDS 13
- A. Groundwater 14
- B. Soil 14
- C. Indoor Air 14
  - 1. Cleanup Levels 15
  - 2. Groundwater (OU1) 15
  - 3. Soil (OU2) 16

IV. LIST OF DELIVERABLES AND OTHER TASKS 16
- A. Project Planning 17
- B. Remedial Action Work Plans 17
- C. Preconstruction Meeting 21
- D. Remedial Action Construction 21
- E. Pre-Final Construction Inspection 22
- F. Final Construction Inspection 22
- G. Remedial Action Construction Completion Report 22
- H. Remedial Action Report 23
- I. Operation and Maintenance 24
- J. Groundwater Monitoring Plan 27
- K. Soil Vapor Monitoring Plan 30
- L. Performance Evaluation Reports 30
- M. Progress Reports 31
- N. Supporting Plans 31

V. SCHEDULE FOR MAJOR DELIVERABLES AND OTHER TASKS 32

VI. REFERENCES 36

<u>ATTACHMENT A</u>

Table A-1: Chemicals of Concern

Table A-2: Cooper Drum Cooperating Parties Group Document List

FIGURE 1

I. PURPOSE/INTRODUCTION

This Statement of Work (SOW) defines the response activities and deliverables the Performing Settling Defendants (PSDs) are obligated to perform in order to implement the Work under the Consent Decree for the Cooper Drum Company Superfund Site (Site). "Site" shall mean the Cooper Drum Company Superfund Site, Los Angeles County, California, as defined in the Consent Decree to which this SOW is attached and made a part. Further, for the purpose of this document, “the Property” is defined to mean the area within the property boundary which consists of 2.4 acres that includes the former facility and is, as of the date of the entry of the Consent Decree, owned by the Cooper Living Trust (Figure 1). The Work consists of the remedial actions (RAs) selected by the United States Environmental Protection Agency (EPA) in the 2002 Record of Decision (ROD), or in any Consent Decree ROD amendment, and as specified in the following documents:

- The Remedial Design (RD) Reports for the Groundwater Operable Unit (OU) OU1 and Soil OU2 issued by EPA in September 2007;
- Phase 1 OU1 Groundwater and OU2 Soil RA Work Plans (RAWP) (and associated RAWP Addenda and supporting documents) approved by EPA under the Unilateral Administrative Order (UAO) for Remedial Action effective on March 19, 2009.

EPA is the lead agency for this Site. The State of California Department of Toxic Substances Control (DTSC) will be copied on all project deliverables and may participate in project meetings and Site visits during implementation of the Consent Decree and the SOW.

The PSDs must implement the Work in compliance with the ROD, the RD Reports, the approved RAWP, this SOW and any applicable EPA guidance. Differences exist among these documents because of adjustments made to account for new Site information collected since the ROD was finalized in 2002. Where differences exist among these documents, the latest approved document shall govern the RA. The RA shall also be consistent with the RD/RA Handbook (EPA Office of Solid Waste and Emergency Response [OSWER] 9355.0-04B, EPA 540/R-95/059, June 1995). Technical and decision documents for the Site are found at the EPA website. Instructions for accessing the website and documents are included in Section VII (References) of this SOW.

As shown in Table A-1, the chemicals of concern (COCs) have been subdivided into three classes of chemicals according to their chemical properties and affected media as follows:

(1) Volatile organic compounds (VOCs), which have been found in soil, soil gas and groundwater at the Site;

(2) 1,4-Dioxane, which has been found in groundwater at the Site; and

(3) Non-VOCs, which are a variety of compounds found in shallow soils at the Site including polycyclic aromatic hydrocarbon compounds (PAHs), polychlorinated biphenyls (PCBs) and lead.

The RA will be conducted in three phases as described in Section II of this SOW.

- Phase 1 will include remediation of Site-related COCs in the soil (OU2) in the vicinity of the former hard wash area (HWA) and drum processing area (DPA) (Figure 1). Phase 1 will also include remediation of Site-related COCs in groundwater (OU1) which, for OU1, extends along Rayo Avenue and abutting properties downgradient (south) to Southern Avenue; this area is referred to as the Phase 1 OU1 Remedial Action Area, and referred to hereinafter as the Phase 1 OU1 Area (Figure 1). The Phase 1 OU1 Area has previously been referred to as the Groundwater Source Area (GSA) in earlier Site documents.
- Phase 2 will include remediation of Site-related COCs in groundwater (OU1) south of Southern Avenue; this area is referred to as the Phase 2 OU1 Remedial Action Area, and referred to hereafter as the Phase 2 OU1 Area (Figure 1). The Phase 2 OU1 Area has previously been referred to as the Downgradient Containment and Treatment (DCT) area in earlier Site documents.
- Phase 3 will include remediation of Site-related COCs (non-VOCs) in the soil (OU2) on the Property (Figure 1).

Each phase of the RA is designed to meet cleanup levels listed in Table A-1, as feasible, and in accordance with the National Contingency Plan.

<u>Summary of Activities Under the UAO</u>

The Site was listed on the National Priorities List in June, 2001. The RA is underway by the PSDs with EPA oversight in accordance with the UAO and SOW issued in February 2009. Pursuant to the requirements established in the UAO SOW, the PSDs submitted the Remedial Action Work Plans (RAWP) for the Phase 1 Soil (OU2) and Groundwater (OU1); conducted a Supplemental Investigation to provide further characterization of COCs in the soil vapor and groundwater at the Site; and performed a pilot test to verify the design criteria for the Phase 1 Soil (OU2) RA. Consequently, RAWP addenda were completed by the PSDs for the Phase 1 Soil (OU2) in February 2011 and the Phase 1 Groundwater (OU1) in May 2011 which incorporated supplemental remedial designs. The most significant RA documents submitted by the PSDs and approved by EPA under the UAO are summarized below.

Phase 1 OU1 Groundwater Plans

- *Final Remedial Action Work Plan for Phase 1 OU1* (AMEC, April 2010)
- *Sampling and Analysis Plan for Supplemental Investigations for Phase 1 OU1 and OU2* (AMEC, May 2010)
- *Supplemental Investigation Report* (AMEC, October 2010)

- *Addendum to the Final Remedial Action Work Plan for Phase 1 OU1* (AMEC, May 2011)
- *Sampling and Analysis Plan for Groundwater Sampling OU1* (AMEC, April, 2011)
- *Final Groundwater Monitoring Plan OU1* (AMEC, May 2011)
- *Proposed Modification to off-Site Extraction Well Network Technical Memorandum* (AMEC, June 2012)

Phase 1 OU2 Soil Plans

- *Final Remedial Action Work Plan for Phase 1 OU2* (AMEC, November 2009)
- *Sampling and Analysis Plan For Dual Phase Extraction Pilot Testing* (AMEC, March 2010)
- *Addendum to the Final Remedial Action Work Plan (Dual Phase Extraction Pilot Test Report), Phase 1 OU2* (AMEC, February 2011)
- *Final Soil Vapor Monitoring Plan OU2* (AMEC, February 2011)
- *Sampling and Analysis Plan for Soil Vapor Monitoring OU2* (AMEC, May 2011)
- *Replacement of Vapor Treatment Technologies Technical Memorandum* (AMEC, December 2011)

Site-Wide Supporting Plans

- *Site Management Plan* (AMEC, December 2009)
- *Site Health and Safety/Contingency Plan* (AMEC, December 2009)
- *Construction Quality Assurance Plan Phase 1 Remedial Action* (AMEC, November 2011)

Additional documents including monthly progress reports, weekly construction reports, ongoing semi-annual Performance Evaluation Reports, ongoing Semi-annual Groundwater Monitoring Reports, and the *Draft Operations and Maintenance Manual for Dual Phase Extraction* (AMEC, September 2011), have been prepared and approved by EPA. These major deliverables are identified in Section V of the SOW and are listed in Table A-2.

Phase 1 RA Activities

The RA activities completed under the UAO for Phase 1 OU2 include installation of the soil vapor extraction (SVE) and dual-phase extraction (DPE) wells and vapor/perched groundwater monitoring wells; construction and operation of the SVE/DPE extraction and vapor/groundwater treatment systems; installation of soil vapor monitoring wells; and replacement of cryogenic-compression-condensation unit (C3 vapor treatment technology) with vapor-phase granular activated carbon (GAC) system.

The RA activities completed under the UAO for Phase 1 OU1 include:

- Installation of new groundwater monitoring wells;
- Monitoring of new and existing groundwater monitoring wells;
- Installation of a groundwater extraction well on the Property;
- Construction and operation of the advanced oxidation groundwater treatment system;
- Operation of two groundwater extraction wells on the Property (existing EW-2 and new EW-4);
- Installation of four new extraction wells in the Phase 1 OU1 Area south of the Property; and
- Design of the extracted groundwater conveyance piping for the Phase 1 OU1 RA back to the groundwater treatment system on the Property.

The initial extraction well network is described in the Phase 1 OU1 RAWP Addendum (AMEC, May 2011). It was subsequently revised as described in the EPA-approved technical memorandum entitled: *Proposed Modifications to Off-Site Extraction Well Network Technical Memorandum* (AMEC, June 2012). The revised configuration included seven extraction wells (two on the Property, the four new extraction wells [EW-5, EW-7A/B and EW-8], and an existing monitoring well, MW-15, to be converted for groundwater extraction; Figure 1). Due to access restrictions, the extraction well configuration described in AMEC (2012) had to be modified, as described in a technical memorandum entitled: *Modifications to Off-Property Extraction Well Network* (Haley & Aldrich, Inc., May 2014). The modifications were approved by EPA on June 6, 2014 and include:

- Replacement of MW-15 and EW-8 with a single extraction well (EW-A) drilled at a 45 degree angle from vertical, starting at the southeast corner of the Property, and terminating below the east side of Rayo Avenue,
- Completion of two horizontal directional bores originating on the Property and traveling beneath Rayo Avenue to EW-5 and to EW-7A/B, and
- Retaining MW-15 and EW-8 for use as monitoring wells.

Construction of the angled well and horizontal directional bores will begin after approval is obtained from the City of South Gate. After this construction is complete, the entire Phase 1 OU1 RA groundwater extraction well network will begin operating.

Phase 2 RA Activities

Groundwater extraction and treatment in the Phase 2 OU1 Area have been deferred while monitored natural attenuation (MNA) is evaluated for Site-related COCs in the Phase 2 OU1 Area (Figure 1). After completion of the MNA evaluation by EPA, the Phase 2 OU1 RA will be one of the following:

- If EPA thereafter selects MNA as the Remedial Action in a Consent Decree ROD Amendment, the parties shall modify the Consent Decree

pursuant to the provision of Paragraph 113 of this Consent Decree. If the Court approves the modification, the PSDs shall implement MNA and the Phase 2 RAWP shall include details associated with the implementation of MNA.

- If EPA does not select MNA as the Phase 2 OU1 Remedial Action, within 12 months of the PSDs receiving such notice from EPA, the PSDs shall submit an FFS to EPA to re-evaluate the feasibility and effectiveness of groundwater extraction and treatment against alternative remedial technologies. The FFS shall include the PSDs' recommendation, if any, of their preferred alternative Remedial Action as an alternative to groundwater extraction and treatment. If, after review of the FFS, EPA selects the PSDs' preferred alternative Remedial Action in a Consent Decree ROD Amendment, the parties shall modify the Consent Decree pursuant to the provisions of Paragraph 113 of this Consent Decree. If the Court approves the modification, the PSDs shall implement such alternative Remedial Action and the Phase 2 RAWP shall include the details associated with implementation of such alternative Remedial Action.
- If EPA does not select an alternative Remedial Action for OU1 Phase 2 pursuant to the above, then the PSDs shall submit the Phase 2 RAWP for implementation of groundwater extraction and treatment, the Remedial Action selected in the ROD, pursuant to the schedule in the SOW.

II. DESCRIPTION OF THE RA

The PSDs shall construct and operate the RAs selected in the ROD to meet the design criteria, drawings, specifications, Applicable or Relevant and Appropriate Requirements (ARARs), and other substantive requirements, criteria, and limitations set forth in the ROD, the RD reports, the approved RAWPs and Addenda, and this SOW, where the latest approved document shall govern the specific details of the RA construction and operation. The details and status of the OU1 and OU2 RAs for the Site are summarized below in Sections II.A. and II.B., respectively.

A. Groundwater (OU1) RA

The groundwater RA will be implemented in two phases as described below.

1. Phase 1 OU1 RA

In the Phase 1 OU1 RAWP Addendum, the Phase 1 OU1 RA Area extends from Corval Alley south to Southern Avenue (Figure 1). The Phase 1 OU1 RA components include groundwater extraction and treatment, and reinjection of treated water, if feasible and consistent with the substantive requirements of applicable permits.

Because COC concentrations have decreased since the 2002 ROD, the in-situ

chemical treatment portion of the remedy has been deferred and may be required to provide remediation of high residual concentrations of COCs if encountered at levels indicative of Dense Non-Aqueous Phase Liquids (DNAPL) below the water table (e.g., concentrations of 1-10% aqueous solubility of DNAPL compounds), or to minimize the need for extraction, and reduce the potential for other VOC plumes in the vicinity to impact the Site.

As detailed in this section, the PSDs have initiated the Phase 1 OU1 RA using groundwater extraction and treatment including ex-situ advanced oxidation with liquid-phase granular activated carbon (LGAC) and expanded the extraction well network in the Phase 1 OU1 Area (Figure 1). The feasibility of reinjection of treated groundwater effluent will be evaluated within twelve months of entry of the Consent Decree and may be implemented if feasible and in compliance with the substantive requirements of the applicable permits. The feasibility evaluation will include evaluation of reinjection to curtail impacts from groundwater COCs originating from off-Site, and will include groundwater modeling and may include a field pilot study. The results of the feasibility study will be provided to EPA in a technical memorandum. Currently, extracted groundwater is discharged to the sanitary sewer under a discharge permit issued by the Los Angeles County Sanitation District (LACSD) in accordance with the ROD.

As detailed in the OU1 RAWP Addendum, the remediation system specifies extraction well locations, extraction depths, and initial groundwater pumping rates for an expanded, multi-well extraction network within the Phase 1 OU1 Area. This is the first phase of the OU1 RA.

The Phase 1 OU1 RA groundwater extraction system has been designed to achieve the following:

- remove dissolved-phase COCs from the Gaspur aquifer to shorten the timeframe for Site cleanup;
- provide hydraulic containment to restrict downgradient movement of COCs; and,
- where feasible, minimize the influence of groundwater COCs originating from off-Site on groundwater quality within the extraction well area.

These objectives will be achieved by extracting groundwater from the Gaspur aquifer through a network of groundwater extraction wells and treating the extracted groundwater by ex-situ treatment. The locations of the existing and proposed extraction wells are shown in the May 16, 2014 technical memorandum, *Modifications to Off-Property Extraction Well Network* (Haley & Aldrich, May 2014). The wells will extract groundwater from the Gaspur aquifer and will be connected to conveyance piping to transmit pumped water to the Property for treatment, if needed for re-injection, or discharge to the sanitary sewer. The approximate locations and design capacity of existing and proposed extraction wells are as follows:

- Two extraction wells located on the Property (EW-2 and EW-4) extract groundwater from the shallow and intermediate depths of the Gaspur

aquifer. To date, more than 11 million gallons of OU1 groundwater have been removed by these wells since July 2012. The flow rate from these wells has been decreased to mitigate the effects of groundwater COCs originating from off-Site.

- Two extraction wells located within an area 140 feet south and southeast of the Property boundary will each extract groundwater from the Gaspur aquifer at an initial rate of approximately 2 to 6 gpm for both mass removal and containment of Site-related groundwater COCs in the Phase 1 OU1 Area (Figure 1).
- A pair of extraction wells located near Southern Avenue, approximately 320 feet south of the Property, will operate at a combined flow rate of approximately 4 gpm for both mass removal and containment of COCs in the Gaspur aquifer.
- The evaluation and operation of the Phase 1 OU1 extraction well network will be based on results of performance monitoring and hydraulic testing of all extraction wells. The monitoring and testing data will determine if the system provides sufficient hydraulic containment of groundwater COCs. In the event that hydraulic containment is not achieved, adjustments to extraction rates and/or additional extraction wells may be necessary.

Extracted groundwater may be treated in the same above ground treatment system used to treat the perched groundwater extracted during the Phase 1 OU2 RA, or may be discharged directly to the sanitary sewer without above ground treatment if COC concentrations are below limits specified by the LACSD. Treatment of COCs may be performed using an ex-situ advanced oxidation system, including ozone and hydrogen peroxide, to destroy the COCs; or an equivalent or better treatment technology may be employed if available in the future, followed by LGAC treatment prior to discharge. In accordance with the ROD, effluent from this treatment system will be discharged to the sanitary sewer under LACSD wastewater discharge requirements. If feasible and consistent with substantive requirements of applicable permits, a portion of the treated effluent may be discharged via reinjection. The operation of the extraction wells EW-2 and EW-4 at a combined flow rate of up to 35 gpm began in February 2013. Within six months of entering the Consent Decree, the PSDs will assess the criteria for meeting the substantive requirements of the Los Angeles Regional Water Quality Control Board (LARWQCB) Waste Discharge Requirements (WDRs) for reinjection of treated groundwater. The PSDs will evaluate the feasibility of reinjection of treated groundwater in a technical memorandum for approval by EPA.

Groundwater monitoring wells installed in the Gaspur and Exposition aquifer will be monitored as part of the RA in accordance with the Final Groundwater Monitoring Plan. The PSDs will revise the Final Groundwater Monitoring Plan to include Exposition Aquifer monitoring wells MW-26 and MW-32. Under the Consent Decree and pursuant to this Statement of Work, wells extending into the Exposition aquifer will be monitored only.

2. Phase 2 OU1 RA.

The selected remedy in the ROD includes extraction and treatment of Site-related groundwater COCs. Although Site-related groundwater COCs lie predominantly beneath the Property and north of Southern Avenue, COCs have been detected in sampling results south of Southern Avenue (the Phase 2 OU1 Area). As discussed above, the Phase 1 OU1 RA as described in the approved OU1 RAWP Addendum specifies the extraction well locations, extraction depths, and initial groundwater pumping rates for a multi-well extraction network in the Phase 1 OU1 Area and evaluation of MNA in the Phase 2 OU1 Area. EPA has approved an assessment and evaluation of MNA for COCs in groundwater within the Phase 2 OU1 Area. The MNA evaluation period is two years commencing with the startup of the entire Phase 1 OU1 groundwater extraction well network.

Groundwater monitoring results included in the OU1 RAWP Addendum indicated that pumping in the Phase 2 OU1 Area (as selected in the ROD) may cause migration of COCs originating from off-Site into the Phase 2 OU1 Area. The PSDs will conduct a two-year MNA sampling program pursuant to the Monitored Natural Attenuation Assessment Work Plan previously approved by EPA to collect data for evaluation by EPA of MNA as an appropriate alternative to groundwater extraction and treatment in the Phase 2 OU1 Area shown in Figure 1. Data collected during the MNA evaluation will be provided to EPA upon completion of data validation by the PSDs. Within three months after completion of the MNA evaluation period, the PSDs will summarize the data and submit a technical memorandum to EPA on the feasibility of MNA. If EPA thereafter selects MNA as the Remedial Action in a Consent Decree ROD Amendment, the parties shall modify the Consent Decree pursuant to the provisions of Paragraph 113 of this Consent Decree. If the Court approves the modification, the PSDs shall implement MNA and the Phase 2 RAWP shall include details associated with the implementation of MNA. If EPA does not select MNA as the Phase 2 OU1 Remedial Action, within 12 months of the PSDs receiving such notice from EPA, the PSDs shall submit an FFS to EPA to re-evaluate the feasibility and effectiveness of groundwater extraction and treatment against alternative remedial technologies. The FFS shall include the PSDs' recommendation, if any, of their preferred alternative Remedial Action as an alternative to groundwater extraction and treatment. If, after review of the FFS, EPA selects the PSDs' preferred alternative Remedial Action in a Consent Decree ROD Amendment, the parties shall modify the Consent Decree pursuant to the provisions of Paragraph 113 of this Consent Decree. If the Court approves the modification, the PSDs shall implement such alternative Remedial Action and the Phase 2 RAWP shall include the details associated with implementation of such alternative Remedial Action. If EPA selects an alternative Remedial Action for OU1 Phase 2 pursuant to the above, the Phase 2 RAWP will be submitted pursuant to the schedule in the amended SOW after Court approval of the modification of this Consent Decree incorporating the Consent Decree ROD Amendment. If EPA does not select an alternative Remedial Action for OU1 Phase 2 pursuant to the above, then the PSDs shall submit the Phase 2 RAWP for implementation of groundwater extraction and treatment, the Remedial Action selected in the ROD, pursuant to the schedule in the SOW.

Implementation of MNA Assessment

The Monitored Natural Attenuation Assessment Work Plan (AMEC, October 28, 2011) was approved by EPA in November 2011. The MNA evaluation program will be implemented as follows:

a. Two years of regular semi-annual post-startup groundwater monitoring, beginning after the initiation of full system operation, will be conducted to establish a new baseline for geochemical conditions in the aquifer system.

b. Compound Specific Isotope Analysis (CSIA) will be used to assess whether COCs have degraded over time based on stable isotope fractionation. Other advanced MNA tools such as bioTRAPs® and/or molecular methods may also be used if appropriate, in order to evaluate MNA. The details on these tools and how they will be implemented are in the MNA Assessment Work Plan cited above.

c. The PSDs will submit the sampling results to EPA upon validation of same.

d. If EPA thereafter selects MNA as the Remedial Action in a Consent Decree ROD Amendment, the parties shall modify the Consent Decree pursuant to the provisions of Paragraph 113 of this Consent Decree. If the Court approves the modification, the PSDs shall implement MNA and the Phase 2 RAWP shall include details associated with the implementation of MNA.

e. If EPA does not select MNA as the Phase 2 OU1 Remedial Action, within 12 months of the PSDs receiving such notice from EPA, the PSDs shall submit an FFS to EPA to re-evaluate the feasibility and effectiveness of groundwater extraction and treatment against alternative remedial technologies. The FFS shall include the PSDs' recommendation, if any, of their preferred alternative Remedial Action as an alternative to groundwater extraction and treatment. If, after review of the FFS, EPA selects the PSDs' preferred alternative Remedial Action in a Consent Decree ROD Amendment, the parties shall modify the Consent Decree pursuant to the provisions of Paragraph 113 of this Consent Decree. If the Court approves the modification, the PSDs shall implement such alternative Remedial Action and the Phase 2 RAWP shall include the details associated with implementation of such alternative Remedial Action.

The MNA monitoring shall be consistent with the guidelines in: 1) USEPA Use of Monitored Natural Attenuation at Superfund, RCRA, Corrective Action and Underground Storage Tank sites, EPA/600R-98/128, April 1999, and 2) A Guideline for Assessing Biodegradation and Source Identification of Organic Ground Water Contaminants using Compound Specific Isotope Analysis (CSIA), EPA 600/R-08/148, December 2008.

B. <u>Soil (OU2) Remedial Action</u>

The soil RA is divided by affected media: soil vapor (gas), perched groundwater, and soil. COC's are found in the vadose zone (unsaturated) soil and perched groundwater (occurring between the approximate depths of 35 and 40 feet bgs) underlying two areas of the Site: the former HWA and the DPA. In addition, analytical results of groundwater sampling completed in 2009 indicate certain COCs were found in perched groundwater samples east of the HWA (URS, Addendum No. 4, 2010).

Two depth intervals will require remedial action as follows:

- Deeper soils (approximately 40 feet bgs) and perched groundwater will be remediated using DPE. DPE of COCs from soils will be performed and completed prior to excavation of the shallow soils.
- Readily-accessible surface to near-surface soils (down to approximately 5 feet bgs) with COCs above action levels will be excavated and transported off-Site for disposal, if practicable, based on potential nuisance to the community and safety and sustainability considerations, as determined by EPA.
- The vapor intrusion pathway will be mitigated via the soil and groundwater remedy and through institutional and, if needed, engineering controls. After active remediation is performed to the extent practicable, a risk assessment will be performed to assess whether additional remedial actions or institutional controls are required to be protective of future receptors.

RA East of HWA

The area east of the HWA on Rayo Avenue is not currently included in the soil RA. The need for remediation of Site-related COCs in this area will be assessed during the Phase 1 OU2 RA. The initial characterization of Site-related groundwater COCs will be performed following completion of the baseline sampling of the on-Site DPE wells and groundwater monitoring wells installed in the perched aquifer. The baseline monitoring has been completed and the results, which have been submitted to EPA, will be evaluated and a technical memorandum will be submitted to EPA recommending locations for the additional characterization and monitoring east of the HWA. The results of characterization of the off-Property groundwater COCs will be used to assess whether off-Property perched groundwater remediation is required. EPA will direct the PSDs to implement remedial action if required, as determined by EPA. See Section VI, Schedule

for Major Deliverables in this SOW for the due date for implementing this task.

1. Phase 1 OU2 RA (VOCs). Installation and Operation of DPE System for Soil Vapor and Perched Aquifer

DPE is currently being used to simultaneously extract soil vapors and de-water the perched aquifer, which in turn expands the vertical extent of SVE in the dewatered zone. The duration of DPE activities will depend on the time required to reach soil gas shut down criteria agreed to in the Final Soil Vapor Monitoring Plan. The SVE wells and treatment system began operation in February 2011. The Phase 1 OU2 RA began full-scale operation when the DPE wells and groundwater treatment system began operation in April 2012.

As presented in the EPA approved *Final Remedial Action Work Plan for Phase 1 Operable Unit 2*, (AMEC, November 2009) and the *Final Addendum to the Final Remedial Action Work Plan (Dual Phase Extraction Pilot Test Report), Phase 1 Operable Unit 2* (AMEC, February 2011), cryogenic compression condensation (C3) technology for treating vapor containing chlorinated VOCs has been implemented at the Site. Pursuant to the above plans, when influent vapor concentrations decreased and remained below approximately 100 parts per million by volume (ppmv) the emission controls system was to be switched to GAC upon approval by EPA. As previously discussed, the change from C3 to GAC was implemented in February 2012.

a. Dewatering of the Perched Aquifer

DPE is currently used to dewater the perched aquifer. Extracted water from the perched aquifer is conveyed to the groundwater treatment system (see Section II.A.1), where it is treated and discharged to the sanitary sewer. A practical limit of dewatering may be reached, such that perched water remains in some areas and is unrecoverable by DPE. When this practical limit is reached, the DPE system may be shut down, and unrecoverable perched groundwater will be addressed by alternate means, including but not limited to MNA and institutional controls, as appropriate, based on a feasibility study and risk assessment as determined by EPA.

b. DPE and Vapor Monitor Wells

Based on SVE radius of influence (ROI) information presented in the EPA approved addendum to the final RAWP (AMEC, February 2011), 14 DPE wells were installed. Eleven wells were constructed in the HWA and 3 wells were constructed in the DPA. Operation of the DPE wells was initiated in April 2012.

The RA includes operation of 10 SVE wells (6 wells in the HWA and 4 wells in the DPA) based on SVE ROI data. Operation of the SVE wells and treatment system was initiated in February 2011.

c. Treatment Compound

The DPE treatment compound is comprised of the following:

A SVE treatment system (a blower followed with GAC treatment prior to discharge to the air), an ex-situ groundwater treatment system, and a 25-foot by 30-foot concrete pad (6-inch slab with edge footing) with secondary containment are the primary components. Groundwater extracted as part of DPE operations is sent to an equalization tank and then may be pumped into an ex-situ treatment system and/or sent through two LGAC vessels as a secondary treatment step to further reduce COC levels to below discharge limits.

2. Phase 3 OU2 RA (non-VOCs). Soil Excavation and Off-Site Transport

Soil with COC concentrations above the cleanup level within five feet of ground surface may be excavated in order to prevent direct exposure of potential future occupants of the Property to soil COCs. Excavation and off-Site transport of soil with COCs above cleanup levels may be implemented within one year after DPE activities have been completed as set forth above in Phase 1 OU2 RA. This phase of the RA may include the removal of Site surface and near surface soils containing non-VOCs at concentrations exceeding the applicable cleanup levels. Institutional controls will be implemented if excavation of soil above cleanup levels is not practicable. Considerations include accessibility, and environmental and community impact as determined by EPA.

Since more than 10 years have passed since the Remedial Investigation soil sampling was completed, additional pre-excavation soil sampling will be performed at the four excavation areas defined in the Remedial Design (two areas each in the HWA and DPA) to a maximum excavation depth of 5 feet bgs. Excavation limits will be pre-determined by collecting soil samples from within the top 5 feet of the four excavation areas. The soil sampling plan will be submitted to EPA along with an updated Sampling and Analysis Plan (SAP) prior to implementing the soil sampling program. Soil sampling results will be submitted to EPA, including a tabulated summary and figure with posted soil concentrations, after validation by the PSDs. EPA will determine if the sampling results are sufficient to define excavation boundaries or if additional sampling is needed. If additional sampling is needed, EPA will direct the PSDs to conduct additional sampling. After sampling is complete, EPA will review the data and determine the extent of excavation. However, where excavation of soils with COCs exceeding action levels is infeasible or impracticable, as determined by EPA (e.g. under remaining structures, if any, in the DPA), institutional controls could also be implemented. Other considerations such as community impact and air quality (due to the number of trucks hauling soil) will be considered in determining the total soil volume to be removed.

The results of the pre-excavation characterization and final excavation limits will be presented in the Phase 3 OU2 RAWP. All excavated soil must be backfilled with clean fill and compacted to appropriate specifications established in the Phase 3 OU2 RAWP.

3. Institutional Controls

Removal of COCs to the health-based cleanup levels will protect receptors at or near the Site during ongoing and future activities. Depending on Site conditions when

the Phase 1 OU2 is completed, institutional controls could also be implemented for soil where COCs exceed action levels in areas where excavation is infeasible or impracticable as determined by EPA (e.g. under remaining structures, if any, in the DPA). Since hazardous substances may remain at the Site at levels not suitable for unrestricted use of the land, institutional controls may be required by EPA in the form of a Land Use Covenant by the property owners with DTSC. If EPA does require institutional controls, the PSDs will use best efforts to ensure execution of such covenants, which shall conform to the following requirements of California Civil Code Section 1471, California Health and Safety Code Section 25355.5, and California Code of Regulations, Title 22, Section 67391.1.

a. No activities that will disturb the soil (e.g., excavation, grading, removal, trenching, filling, earth movement, mining, or drilling) shall be allowed at the Property without a Soil Management Plan pre-approved by DTSC in writing.

b. Any soil brought to the surface by grading, excavation, trenching or backfilling shall be managed in accordance with all applicable provisions of state and federal law.

4. Prohibited Activities.

The following activities shall not be conducted at the Property:

a. Drilling for any water, oil, or gas without prior written approval by the DTSC.

b. Extraction or removal of groundwater without a Groundwater Management Plan pre-approved by the DTSC in writing.

c. Activity that may alter, interfere with, or otherwise affect the integrity or effectiveness of, or the access to, any investigative, remedial, monitoring, operation or maintenance system (e.g., cap, vapor extraction system, monitoring system, groundwater extraction system) or activity required for the Property without prior written approval of the Department.

III. PERFORMANCE STANDARDS

The Performance Standards are set out in the RAOs and ARARs, and the cleanup levels are set forth in the ROD (listed in Table A-1). Consistent with the provisions of this SOW and the Consent Decree, the PSDs shall achieve Performance Standards in accordance with the National Contingency Plan. Specifically, with respect to groundwater, the RA shall provide sufficient groundwater extraction rates to achieve capture and containment of the Site-related groundwater COCs (based on the groundwater modeling and zone of capture analysis described in Section L), without

significantly increasing the potential for commingling with COCs originating from off-Site. The RAOs for Cooper Drum, as stated in the ROD, are to protect human health and the environment from exposure to contaminated soil, groundwater, or indoor air, and to restore the Site groundwater's potential beneficial use as a drinking water source. The ROD-selected remedy meets these RAOs through treatment of soil and groundwater containing COCs. The RAOs also serve to facilitate the five-year review determination of protectiveness of human health and the environment.

The RAOs for Cooper Drum are listed below:

A. <u>Groundwater</u>

Restore the groundwater through VOC treatment to drinking water standards (i.e. maximum contaminant levels [MCLs]).

B. <u>Soil</u>

Remediate soil COCs to prevent contaminants from migrating into groundwater at levels which would exceed drinking water standards.

Where feasible, remediate non-VOC contaminated soil above health-based action levels protective of ongoing and potential future Site uses.

C. <u>Indoor Air</u>

Remediate soil and groundwater COCs (VOCs) to health-based action levels to eliminate potential indoor air exposure.

The RAOs were formed based on the following:

- Reasonable anticipated land use scenarios from the human health risk assessment that include continuation of heavy industrial land use and the possibility of future development for on-Site residential land use.
- The continuing contaminant threat to the aquifer (identified as a potential drinking water source) posed by soil contaminants underlying Cooper Drum.
- The human health risk assessment identifying COCs, driving the need for RA (risk drivers) that is protective of human health.

The ROD strategy for remediation of COCs in OU1 groundwater at the Site includes the following:

- A combination of methods will be used to achieve VOC remedial goals and restore the beneficial use of the Site's groundwater as a potential drinking water source.
- A groundwater extraction/treatment system will be used for containment and remediation.

- Chemical in-situ treatment will also be used to enhance the treatment of COCs in groundwater, minimize the need for extraction, and reduce the potential for other COC plumes in the vicinity to impact Cooper Drum.

The ROD strategy for remediation of COCs in OU2 soil includes the following:

- To remove the potential threat to human health, the selected remedy for soil will use DPE for treatment of VOCs in soil.
- Other non-VOC soil COCs, including PAHs, PCBs, and lead will be excavated for disposal, if feasible.
- Institutional controls may be required to prevent exposure to soil COCs where excavation is not practicable, and, consistent with the ROD, a restrictive covenant may be recorded so that no inappropriate uses will occur. Practicability will be based on potential community nuisance, safety, and sustainability considerations as determined by EPA.

1. Cleanup Levels

A summary table of the groundwater and soil COCs and cleanup levels is included as Attachment A and discussed below.

2. Groundwater (OU1)

Twelve hazardous substances are COCs in OU1 groundwater: 1,2,3-trichloropropane (TCP); trichloroethene (TCE); 1,2-dichloroethane (1,2-DCA); vinyl chloride (VC); 1,2-dichloropropane (DCP); 1,1-dichloroethane (1,1-DCA); cis-1,2-dichloroethene (cis-1,2-DCE); trans-1,2-DCE; 1,1-DCE, tetrachloroethene (PCE); benzene; and 1,4-dioxane.

Except for 1,4-dioxane, all other groundwater COCs are VOCs. As stated in the ROD, the RAO for groundwater is restoration of the groundwater (through treatment) for beneficial use as a potable water supply. Therefore, the cleanup goal for the majority of the Site VOCs is the MCL. However, the cleanup goal for TCP (for which an MCL has not been defined) is to achieve a concentration of 1 micrograms per liter [μg/L] as shown in Table A-1.

1,4-dioxane is not addressed in the ROD. Post-ROD supplemental investigations of the Site indicated the presence of 1,4-dioxane in the perched aquifer and shallow groundwater. At the time of discovery of the 1,4-dioxane, the cleanup value used for the 1,4-dioxane was the EPA PRG of 6.1 ug/L. This value was set out in the SOW incorporated in the 2009 UAO and in the RAWP. Currently there is no MCL for 1,4-dioxane. Subsequent to the RAWP, the California Department of Health (CDPH) has lowered the notification level for 1,4-dioxane from 3 to 1 ug/L and the PRG has been lowered to the RSL of 0.67 ug/L. Currently, the treated wastewater is discharged from the Site under an Industrial Wastewater Discharge Permit which does not specify a specific cleanup level for 1,4-dioxane, because the treated water is not reused. A specified discharge level of 5 ug/L for 1,4-dioxane is required by the LACSD in areas

where treated water is reused. If, prior to the five year review, there has not been a decision document promulgated by EPA to establish a cleanup level for 1,4-dioxane, this will be further addressed by EPA in the five year review.

The Remedial Investigation Feasibility Study (RI/FS) and ROD also document impacts to the Site from upgradient plumes originating from off-site sources. For example, the RI/FS and ROD identify high concentrations of TCE detected under the Jervis Webb site and a monitoring well located downgradient of Jervis Webb but 200 feet upgradient of the Site. As specified in the ROD, the PSDs shall consider reinjection to "reduce the intrusion" of upgradient COCs from off-site sources.

3. Soil (OU2)

The ROD identifies the VOCs and non-VOCs as COCs in soil (see Attachment A).

The ROD specifies that the cleanup levels for VOCs in soil are to be determined (TBD) based on the remedial goal, which is to prevent the vertical migration of COCs to the Gaspur aquifer which could result in concentrations in the Gaspur aquifer that would be above drinking water standards (MCLs). To evaluate attainment of this goal, performance evaluation soil gas samples will be collected during remediation (soil vapor extraction). As specified in the ROD, the sampling results will then be used in the VLEACH (or comparable) model to ensure that residual COC concentrations remaining in soil (after soil vapor extraction) are protective of groundwater receptors. Consistent with current EPA vapor intrusion assessment procedures, currently the 2013 Vapor Intrusion Guidance update, soil gas sample results can also be used along with indoor air and groundwater sampling results to derive the respective screening levels by media to support a multiple lines of evidence (MLE) approach for vapor intrusion. The ROD specifies the cleanup goal for PCBs in soil as 870 parts per billion (ppb). This level was determined by applying residential exposure parameters used in the Site human health risk assessment and a target health risk level of 1 in 100,000. The ROD also describes the cleanup level for PAHs in soil as being based on the upper tolerance limit background benzo(a)pyrene-toxicity equivalent (B(a)P-TE) concentration for the Southern California PAH data set, which is 900 ppb B(a)P-TE. Finally, the ROD specifies a cleanup goal for lead of 400 parts per million (ppm) based on lead uptake in children or, a restrictive covenant, if residential cleanup standard cannot be met.

IV. LIST OF DELIVERABLES AND OTHER TASKS

The PSDs shall submit plans, specifications, and other deliverables for EPA review and/or approval, as specified below.

The PSDs shall provide both EPA and DTSC, unless otherwise expressly provided herein, a copy of each deliverable and submission in accordance with the requirements, if any, specified in the section applicable to such deliverable or submission and in accordance with the schedule contained in Section VI of this SOW. Unless otherwise expressly provided herein, DTSC shall have a reasonable opportunity to review and comment on each deliverable and submission from the PSDs. As the lead agency, EPA will resolve any differences, and will provide comments on submitted documents or data to the PSDs.

The Phase 1 supporting plans in Section N (i.e., Site Management Plan [SMP], SAP, etc.) have been completed and approved by EPA; these plans will be updated before any Phase 2 and Phase 3 field activities begin on the Site. EPA may also request periodic updates of selected deliverables (e.g., work plan, sampling plan, monitoring plans, etc.) described in this section of the SOW, as more information is gathered or as conditions change during implementation of the RA. One copy of each final deliverable shall be provided in an unbound format suitable for reproduction and additional copies shall be provided as requested by the EPA. Any information presented in color must be legible and interpretable when reproduced in non-color. At EPA's request, final deliverables shall also be provided in an electronic format.

The PSDs shall implement quality control procedures to ensure the quality of all reports and submittals to the EPA. These procedures shall include, but are not limited to, internal technical and editorial review, independent verification of calculations, and documentation of all reviews, problems identified, and corrective actions taken.

Consistent with the Consent Decree, the EPA may approve, disapprove, or approve in part each deliverable. Major deliverables, described below, shall be submitted according to the schedule in Section VI of this SOW.

A. <u>Project Planning</u>

The PSDs shall meet with the EPA Remedial Project Manager (RPM) during the project-planning phase to assist in developing a conceptual understanding of the RD/RA requirements for the Site. Information developed during this meeting shall be used to plan the project and to determine the extent of the additional data, if any, necessary to implement the RD/RA. It will be necessary to review the existing groundwater and soil data for the Site in the project planning stage.

B. <u>Remedial Action Work Plans</u>

The RA will be conducted in three phases. Phase 1 consisted of preparing two separate work plans for remediation of COCs in the soil and groundwater source area. All Phase 1 Work Plans and Addenda have been submitted and approved by EPA (see Section I.A and Table A-2). A work plan will be prepared for Phases 2 and 3. The PSDs shall submit the two RA Work Plans, describing the strategy of work for construction and operation of the RA as follows:

- The Phase 2 RA Work Plan shall include details for the MNA program if the MNA program is selected by EPA as the final remedy. If the MNA program is not selected by EPA as the final remedy, the Phase 2 RA Work Plan shall include details for groundwater extraction and treatment, or another remediation option, including potential alternatives to groundwater extraction evaluated under a FFS and selected by EPA as the final remedy.
- The Phase 3 RA Work Plan shall include details for the OU2 Soil Excavation and Disposal and Institutional Controls (Soil E/IC Work Plan).

As noted in Section II, B. the need for remediation of soil east of the HWA will be assessed during Phase 1 of the soil RA. Depending upon the assessment results, EPA will direct the PSDs to implement remedial action if practicable, as determined by EPA.

The RA Work Plans must be reviewed and approved by EPA. Each Work Plan shall include:

1. Project Description

Closely following the RD reports for groundwater (OU1) and soil (OU2), the RA Work Plans shall include a description of the work to be implemented by the PSDs.

Phase 2 — The Phase 2 RA Work Plan shall include details associated with the Phase 1 OU1 MNA results collected during the two-year field trial period and details for implementing MNA of COCs in the Phase 2 OU1 Area, if EPA thereafter selects MNA as the Remedial Action in a Consent Decree ROD Amendment, the parties shall modify the Consent Decree pursuant to the provisions of Paragraph 113 of this Consent Decree. If the Court approves the modification, the PSDs shall implement MNA and the Phase 2 RAWP shall include details associated with the implementation of MNA.
If EPA does not select MNA as the Phase 2 OU1 Remedial Action, within 12 months of the PSDs receiving such notice from EPA, the PSDs shall submit an FFS to EPA to re-evaluate the feasibility and effectiveness of groundwater extraction and treatment against alternative remedial technologies. The FFS shall include the PSDs' recommendation, if any, of their preferred alternative Remedial Action as an alternative to groundwater extraction and treatment. If, after review of the FFS, EPA selects the PSDs' preferred alternative Remedial Action in a Consent Decree ROD Amendment, the parties shall modify the Consent Decree pursuant to the provisions of Paragraph 113 of this Consent Decree. If the Court approves the modification, the PSDs shall implement such alternative Remedial Action and the Phase 2 RAWP shall include the details associated with implementation of such alternative Remedial Action. If EPA selects an alternative Remedial Action for OU1 Phase 2 pursuant to the above, the Phase 2 RAWP will be submitted pursuant to the schedule in the amended SOW after Court approval of the modification of this Consent Decree incorporating the Consent Decree ROD Amendment. If EPA does not select an alternative Remedial Action for OU1 Phase 2 pursuant to the above, then the PSDs shall submit the Phase 2 RAWP for implementation of groundwater extraction and treatment, the Remedial Action selected in the ROD, pursuant to the schedule in the SOW. The *Final Groundwater Monitoring Plan, OU1*

(AMEC, May 2011), which is a secondary supporting document for the Phase 2 RA Work Plan, has been approved by EPA.

Phase 3 — The Soil Excavation/Institutional Controls Work Plan shall include details for implementation of excavation and disposal of COCs in soil and institutional controls for soil COCs that may be left in place.

2. Description of the Responsibility and Authority of All Organizations and Key Personnel Involved With the Remedial Action.

Each RA Work Plan shall include a description of the responsibilities and qualifications of key personnel expected to direct or play a significant role in the RD, RA, or treatment systems operation and maintenance (O&M), including PSDs' project coordinator, designer, construction contractor, construction quality assurance personnel, and resident engineer. The Work Plan shall define lines of authority and provide brief descriptions of duties.

3. Schedule

Phase 2 and Phase 3 RA Work Plans shall identify the initiation and completion dates for each required construction activity, inspection, and deliverable required by the SOW schedule (Section VI). Each Work Plan shall also identify the approximate timing of meetings and other activities that may require EPA participation, but are not identified in Section VI of this SOW.

The schedule shall include monthly coordination meetings. Meeting frequency may be decreased as deemed appropriate by EPA. The coordination meetings shall address project status, challenges, solutions, and schedule. A representative of the PSDs shall prepare a meeting summary to document all decisions made, issues outstanding, schedule changes, planned follow up, and assignments.

4. Contracting Strategy and Construction Process

Each RA Work Plan shall briefly describe the planned contracting strategy, including a brief description of the EPA evaluation and approval process for both minor and significant construction changes.

5. Plans for Satisfying All Permitting Requirements and Acquiring Property, Leases, Easements, or Other Access

Phase 2 and Phase 3 Work Plans shall list all permits, property, leases, and easements required for implementation of the RA; permits, property, leases, and easements acquired to date; and a schedule for submittal of permit applications and acquisition of property, leases, or easements not yet obtained.

Where normally required, permits must be obtained for all off-Site activities, such as from the California Department of Public Health for domestic use of treated groundwater. The PSDs are not required to obtain permits for on-Site remedial activities,

but must comply with all substantive requirements, including local building codes. If permits will not be obtained for an on-Site activity where a permit is normally required, the PSDs shall describe all consultative or coordination activities planned to identify and satisfy the substantive requirements.

6. Third Parties Necessary for Construction, or Operation and Monitoring of the RA

Phase 2 and Phase 3 RA Work Plans shall describe the roles and responsibilities of PSDs, the County of Los Angeles, the City of South Gate, participating water and wastewater agencies, and other parties expected to play a significant role in the construction or operation of the RA. The Work Plan shall summarize and provide copies of Memorandums of Understanding and draft or final agreements with other third parties expected to participate in implementation of the RA. If legally binding agreements are not in place, the Work Plan shall describe commitments made to date and planned efforts to secure necessary commitments including a schedule. If the participation of a third party is uncertain, the Work Plan shall describe alternatives to be implemented in the event that the party does not fulfill its planned role. Possible third party roles include agreeing to the use of existing equipment (e.g., groundwater extraction wells, water treatment facilities, pipelines, and groundwater recharge facilities), treatment plant operation, and acceptance of treated groundwater.

7. Identification of Any Concerns about the Quantity, Quality, Completeness, or Usability of Water Quality or Other Data Upon Which the Design Was Based

PSDs shall provide a description of additional data collection efforts, if any, required for completion of the RD. PSDs shall consider whether any data are needed to verify that critical design assumptions remain valid (e.g., the groundwater extraction and discharge rates or injection rates required for hydraulic control of Site-related groundwater COCs, soil areas requiring excavation, etc.). If additional data are required, the PSDs shall propose a schedule for preparation of a SAP (or Addendum) and implementation of the SAP. The Plan shall include all efforts (e.g., groundwater modeling) to evaluate additional data collected.

8. Description of Planned Community Relations Activities to Be Conducted During RA

PSDs shall cooperate with the EPA and DTSC in providing community relations support work. As requested by the EPA or DTSC, the PSDs shall support the preparation of such information (e.g., graphics and data for EPA-produced fact sheets) for dissemination to the public to explain activities at or relating to the Site. This support shall be at the request of the EPA and may include:

a. Logistical support for public informational or technical meetings, including the provision/copying of presentations, signage, exhibits, visual aids, and equipment; renting and

setting up meeting locations, and English translation support at public meetings;

(1) Publication and copying of fact sheets or updates, and document translation;

(2) Assistance in placing the EPA-generated public notices in print; and

(3) Logistical support for EPA-conducted community interviews.

9. Updates to the RA Work Plans and Periodic Reporting to the EPA

Each RA Work Plan shall describe provisions for reporting progress to the EPA (consistent with the schedule included in Section VI of this SOW and the Groundwater [OU1] and Soil [OU2] Monitoring Plans). The RA Work Plans shall also describe the process of future updates as needed to document changes or provide information not available at the time of submittal.

C. Preconstruction Meeting

A preconstruction meeting shall be held after selection of the construction contractor and before initiation of construction. The meeting shall include the PSDs' representatives and interested federal, state, and local government agency personnel to define the roles, relationships, and responsibilities of all parties; review work area security and safety protocols access issues construction schedules; and construction quality assurance procedures.

The PSDs shall ensure that the notes from the preconstruction meetings are documented and transmitted to all parties in attendance including the names of people in attendance, the issues discussed, all clarifications made, and/or any instructions issued.

The preconstruction meeting for Phase 1 OU2 SVE was held in September 2010. The preconstruction meeting for Phase 1 OU2 DPE/Groundwater treatment system was held in June 2011. The preconstruction meeting for the Phase 1 OU1 Groundwater treatment system (i.e. the addition of advanced oxidation system) and extraction wells and conveyance piping located off the Property within the Phase 1 OU1 Area was held in April 2012.

Any preconstruction meetings required during the Phase 2 and 3 RA will be conducted as described above.

D. Remedial Action Construction

PSDs shall implement the EPA-approved RA Work Plans. The Phase 1 construction activities have been completed, with the exception of installation of the off-Property groundwater extraction conveyance piping.

E. Pre-Final Construction Inspection

The pre-final construction inspection for Phase 1 OU2 SVE was held in February 2011. The Phase 1 OU2 DPE/Groundwater Treatment System inspection was held in September 2011. Both inspections followed the process described below. Pre-final construction inspections for future RA systems shall also follow this format.

Within 14 days of the PSDs' belief that construction of a remedy component is complete, and the RA or a discrete portion of the RA has been implemented consistent with all aspects of the plans and specifications and is operating as designed, the PSDs shall notify the EPA and the DTSC for the purposes of conducting a pre-final inspection. The EPA and the PSDs shall attend the inspection. Other participants shall include the project coordinator and other federal, state, and local agencies with a jurisdictional interest. If a pre-final construction inspection is held for a portion of the RA, one or more additional inspections shall be conducted so that the entire RA is inspected.

The objective of the inspection is to determine whether construction is complete and the RA (or the inspected portion) is operating as designed. Any outstanding construction items discovered during the inspection shall be identified and noted. PSDs shall certify that the equipment is effectively meeting remedial action performance specifications. Retesting shall be completed where deficiencies are revealed. A Pre-Final Construction Inspection Report shall be submitted by PSDs, which outlines the outstanding construction items, actions required to resolve the items, completion dates for the items, and an anticipated date for a final inspection. Pre-Final Construction Inspection Reports can be in the form of a bullet list or letter.

F. Final Construction Inspection

Within twenty-one (21) days after completion of any work identified in a Pre-Final Inspection Report, the PSDs shall notify the EPA and DTSC for the purposes of conducting a final inspection. The final inspection shall consist of a walk-through inspection by the EPA and PSDs. The applicable Pre-Final Inspection Report shall be used as a checklist with the final inspection focusing on the outstanding construction items identified in the pre-final inspection. Confirmation shall be made that outstanding items have been resolved.

Any outstanding construction items discovered during the inspection still requiring correction shall be identified and noted on a punch list. If any items are still unresolved, the inspection shall be considered to be a Pre-Final Construction Inspection requiring another Pre-Final Construction Inspection Report and subsequent final construction inspection.

The final construction inspection for the Phase 1 OU2 SVE and DPE/Groundwater treatment systems was performed in April 2012.

G. Remedial Action Construction Completion Report

As specified in the approved schedule of this SOW, after construction is

completed on the entire RA for each OU, and the systems are operating as designed, the PSDs shall submit a Remedial Action Construction Report for each OU.

A registered professional engineer and the PSDs' project coordinator shall state that the construction of the RA has been completed in accordance with the RA Work Plans submitted under this SOW. The written report shall provide a synopsis of the work defined in this SOW, describe deviations from the RA Work Plan, include as-built drawings signed and stamped by a licensed professional engineer, provide actual costs of the RA and O&M to date, and provide a summary of the results of operational and performance well monitoring completed to date. The report shall contain the following statement, signed by a responsible corporate official of the PSDs or the PSDs' Project Coordinator:

> "To the best of my knowledge, after thorough investigation, I certify that the information contained in or accompanying this submission is true, accurate and complete. I am aware that there are significant penalties for submitting false information, including the possibility of fine and imprisonment for knowing violations."

H. <u>Remedial Action Report</u>

An Interim Remedial Action Report will be prepared two-hundred and seventy (270) days after the EPA approval of the Remedial Action Construction Report or after the PSDs determine that the remedy is functioning properly and performing as designed, whichever is earlier. In the report, a registered Professional Engineer and the PSDs Project Coordinator shall certify that the Remedial Action is operating and functioning as intended. The written report shall provide a summary of the results of operational and performance monitoring completed to date and shall provide documentation to substantiate the PSDs certification, including, but not limited to, relevant data presented in accordance with Sections V.J (Groundwater Monitoring Plan), Sections V.K (Soil Vapor Monitoring Plan) and V.L (Performance Evaluation Reports) of this SOW. The report shall also describe deviations from the RA Work Plans. After EPA review, the PSDs shall address any comments and submit a revised report.

Within forty-five (45) days after the PSDs conclude that the RA has been fully performed and the Performance Standards have been attained, the PSDs shall schedule and conduct a pre-certification inspection to be attended by EPA and the PSDs. If after the pre-certification inspection the PSDs still believe that the RA has been fully performed and the cleanup goals have been attained, the PSDs shall submit a certification to EPA that all work has been completed. The Final RA Report is due ninety (90) days after completion of the pre-certification inspection to EPA. The RA Report shall include:

1. A copy of the Final Construction Completion Report;

2. Synopsis of the work defined in this SOW and a demonstration in accordance with the monitoring plans that cleanup goals have been attained;

3. Certification that the remedial action has been completed in full satisfaction of the requirements of the Consent Decree and this SOW; and shall contain the following statement, signed by a responsible corporate official of the PSDs or the PSDs Project Coordinator:

"To the best of my knowledge, after thorough investigation, I certify that the information contained in or accompanying this submission is true, accurate and complete. I am aware that there are significant penalties for submitting false information, including the possibility of fine and imprisonment for knowing violations."; and,

4. A description of how the PSDs will implement any remaining part of the EPA approved Operation and Maintenance Plan.

After EPA review, the PSDs shall address any comments and submit a revised report. The Remedial Action shall not be considered complete until EPA certifies, in writing, that the Remedial Action has been performed in accordance with the Consent Decree and this SOW.

I. Operation and Maintenance

O&M shall be performed in accordance with the Operation and Maintenance Manual approved by EPA for each RA Work Plan, except for the Phase 3 Soil Excavation and Disposal Work Plan which requires no O&M. At ninety (90) days after initiation of construction for each phase of the RA, except soil excavation, the PSDs shall submit to the EPA a draft O&M Manual for review. Development of each manual should be based on the following: (1) the existing draft O&M manuals in the OU1 RD Report (see Appendix H) and the OU2 RD Report (see Appendix L), and (2) the guidelines described in "Operation and Maintenance in the Superfund Program" (OSWER 9200.1-37FS, EPA 540-F-01-004, May 2001)(http://www.epa.gov/superfund/policy/pdfs/sheet.pdf).

The *Draft O&M Manual for Dual Phase Extraction System Phase 1 OU2* (AMEC, September 2011) was submitted by the PSDs on September 9, 2011 and an interim update for the Phase 1 OU2 was subsequently submitted to EPA. The Draft *O&M Manual for Dual Phase Extraction System Phase 1 OU 2* will be updated to include the Phase 1 OU1 Groundwater Extraction and Treatment System. The comprehensive O&M Manual for Phase 1 OU1 and OU2 will be submitted after completing the construction of the OU1 groundwater extraction system.

The O&M Manual must be reviewed and approved by the EPA prior to initiation

of O&M activities. If necessary, the Manual shall be modified to incorporate any design modifications implemented during the RA. Upon approval, PSDs shall implement the O&M Manual in accordance with the schedule contained therein. The O&M Manual shall describe an overview of the remedy and design philosophy; personnel, start-up procedures, operation, troubleshooting, training, and evaluation activities that shall be carried out by the PSDs and address the following elements:

1. Equipment start-up and operator training including:

   a. Technical specifications governing treatment systems;

   b. Requirements for providing appropriate service visits by experienced personnel to supervise the installation, adjustment, start-up and operation of the systems; and,

   c. Schedule personnel training for appropriate operational procedures, once startup has been successfully completed.

2. Description of normal operation and maintenance including:

   a. Description of tasks required for system operation;

   b. Description of tasks required for system maintenance;

   c. Description of prescribed treatment or operating conditions; and,

   d. Schedule showing the required frequency for each O&M task.

3. Description of potential operating problems including:

   a. Description and analysis of potential operating problems;

   b. Sources of information regarding problems; and,

   c. Common remedies or anticipated corrective actions.

4. Description of routine monitoring and laboratory testing including:

   a. Description of monitoring tasks;

   b. Description of required laboratory tests and their interpretation;

   c. Required quality assurance/quality control (QA/QC); and,

   d. Schedule of monitoring frequency and date, if appropriate, when monitoring may cease.

5. Description of alternate O&M including:

   a. Should a system failure occur, alternate procedures to prevent undue hazard; and,

   b. Analysis of vulnerability and additional resource requirements should a failure occur.

6. Safety Plan including:

   a. Description of precautions to be taken and required health and safety equipment, etc., for Site personnel protection;

   b. Safety tasks required in the event of systems failure; and

   c. Emergency operating and response programs.

7. Community Involvement:

   a. The PSDs are required to follow the Community Involvement Plan and participate in community involvement activity pursuant to the Plan.

8. Description of equipment including:

   a. Equipment identification;

   b. Monitoring components installation;

   c. Site equipment maintenance; and,

   d. Equipment and installation components replacement schedule.

9. Permits, standards, and approvals.

10. Records and reporting including:

   a. Operating logs;

   b. Laboratory records;

   c. Records of operating cost;

   d. Mechanism for reporting emergencies;

   e. Personnel and maintenance records; and,

   f. Monthly reports to state/federal agencies.

J. Groundwater Monitoring Plan

Monitoring activities shall be performed in accordance with the EPA approved Final Groundwater Monitoring Plan (June 2, 2011), to evaluate whether the performance standards, as described in Section III of this SOW and in the ROD, are being met. The existing monitoring well network for the Cooper Drum plume includes 70 monitoring wells. The monitoring activities will include: measuring water levels; identifying performance monitoring wells; and, monitoring from these wells and other monitoring wells, extraction wells, and the treatment systems. In addition, this SOW requires the installation of additional monitoring wells, upgradient of the Site, to establish upgradient conditions and monitor off-Site groundwater COCs in the three zones (i.e. shallow, intermediate, and lower) of the Gaspur Aquifer. The appropriate locations for these upgradient monitoring wells will be determined and installed within one year after lodging of the Consent Decree, or when feasible based on adjacent property use.

A revised SAP in accordance with the requirements of Section N of this SOW is required in support of all fieldwork conducted under the Groundwater Monitoring Plan. A SAP (*Sampling and Analysis Plan for Groundwater Sampling OU 1* [AMEC, April 2011]) was prepared in support of all fieldwork and approved by EPA. Several groundwater monitoring events have been conducted since June 2011. The *First Semi-Annual 2011 Groundwater Monitoring Report OU1* (AMEC, August 2011), was submitted to EPA on August 8, 2011. Additional semi-annual groundwater monitoring reports have been completed since then (see Table A-2). The above-cited groundwater monitoring plan is in conformance with the requirements described in this section below. Any future groundwater monitoring plans (e.g. OU1 Phase 2) or revisions shall also address the following requirements:

1. Data Collection Parameters

In accordance with the existing Final Groundwater Monitoring Plan (OU1), the PSDs have specified the locations of monitoring wells in the Gaspur and Exposition Aquifers and sampling and monitoring methods and frequency.

Per the Final Groundwater Monitoring Plan, new groundwater monitor wells will be sampled quarterly for the first year after installation. Existing wells identified as being part of the Site monitoring network will be monitored as follows:

a. Semiannually – groundwater concentrations greater than cleanup goals;

b. Annually – groundwater concentrations less than cleanup goals for two consecutive sample events; and,

c. Confirmation sampling – if groundwater concentrations remain less than cleanup goals for three consecutive sample events.

d. If concentrations increase above cleanup goals at any time, the well shall resume the semiannual sampling frequency and follow the process listed above.

2. Computer Modeling

The PSDs shall perform hydraulic and COC transport modeling simulations of groundwater flow and COC migration to help determine whether the RA will sufficiently contain the groundwater COCs during all anticipated pumping and recharge conditions (i.e., demonstrating that simulated particles originating in areas with Site-related groundwater COCs converge into the extraction wells) while minimizing the potential for plume commingling. The PSDs shall also propose and evaluate modifications to the extraction plan, if needed, using an appropriate three-dimensional, time-varying model of groundwater flow. When establishing extraction capture zones, the PSDs shall follow the guidelines described in "A Systematic Approach for Evaluation of Capture Zones at Pump and Treat Systems" (http://www.epa.gov/ada/download/reports/600R08003/600R08003.pdf).

The Groundwater Monitoring Plan described the model calibration approach and assumptions. All models must be calibrated by the PSDs and approved by EPA prior to use.

3. Split Sampling

The Groundwater Monitoring Plan shall specify procedures for coordination of the EPA or DTSC collection of split or replicate samples and water level measurements if the EPA or DTSC requests such samples.

4. Contingency Action

The Groundwater Monitoring Plan contains contingency plans which will be followed as needed.

5. Treatment System Monitoring

The Groundwater Monitoring Plan will also include treatment system monitoring. Treatment system monitoring and extraction well samples will be required during the system startup and routine operation to ensure proper operation of the remediation equipment, and to evaluate if cleanup goals have been reached. The Groundwater Monitoring Plan shall describe (1) the types of data to be collected from the treatment system; (2) sampling, and data gathering methods; (3) monitoring locations; (4) sampling frequencies; and if appropriate; (5) minimum monitoring duration.

6. Well Discharge

The PSDs shall measure flow rates at each extraction well (and calculate volumes of water extracted) as a function of time, using a meter/totalizer installed on the discharge pipe for each extraction well. The reading on the meter/totalizer shall be recorded at least

quarterly and whenever water quality samples are collected from that well.

7. Treatment Plant Effluent/Treated Groundwater

The PSDs shall analyze treated water samples to verify attainment of groundwater treatment and discharge goals, as stated in the discharge limits and monitor operational parameters that are used as indicators of treatment facility performance or the need for maintenance. The PSDs shall propose appropriate parameters and schedules for sampling of treated groundwater to ensure compliance with ARARs. After a period of initial monitoring, the PSDs may propose criteria for subsequent reductions in sampling and/or analysis frequencies if the sampling results support such reductions.

8. COC Mass Removal

The PSDs shall calculate the mass of individual COCs removed from the Gaspur Aquifer by each extraction well, quarterly and cumulatively.

9. Aquifer Testing

The PSDs shall assess drawdown at and near new extraction wells to estimate aquifer transmissivity in the vicinity of the wells.

10. Air Emissions and Soil Gas Monitoring

The PSDs shall perform air emission monitoring to verify that air emissions from treatment operations do not exceed ARARs.

11. Data Analysis and Reporting

The Groundwater Monitoring Plan shall also describe how the performance data will be analyzed, interpreted, and reported to evaluate compliance with ARARs. All data shall be submitted by the deadlines specified in an agreed upon schedule. Claims of change, difference, or trend in water quality or other parameters (e.g., between observed values and an ARAR) shall include the use of appropriate statistical concepts and tests.

All analytical data, whether or not validated, shall be submitted to the EPA within sixty (60) calendar days of sample shipment to the laboratory, or fourteen (14) days of receipt of analytical results from the laboratory, whichever occurs first. All analytical data previously validated and in electronic format in an approved data structure, shall be submitted within ninety (90) calendar days of the sample shipment to the laboratory. Well construction information shall be submitted at the completion of the initial sampling activities or within 90 days after completion of a well, whichever is earlier.

The Groundwater Monitoring Plan shall provide a brief description of the contents and format for the Performance Evaluation Reports (see Section L below) and electronic reporting formats to support submittal of all groundwater data to the EPA.

K. Soil Vapor Monitoring Plan

The *Final Soil Vapor Monitoring Plan OU 2* (AMEC, February 2011) was approved on February 21, 2011. This work plan is only applicable to the Phase 1 RA. Soil vapor monitoring activities shall be performed in accordance with an approved Soil Vapor Monitoring Plan, to evaluate whether the performance standards, as described in this SOW and in the ROD, are being met. The monitoring activities include monitoring from vapor monitor wells, SVE wells, and the vapor treatment systems. A SAP in accordance with the requirements of Section N of this SOW has been prepared in support of all fieldwork to be conducted according to the Soil Vapor Monitoring Plan. The *Sampling and Analysis Plan for Soil Vapor Monitoring OU2* (AMEC, May 2011) supports all fieldwork being conducted according to the Soil Vapor Monitoring Plan. The above-cited soil vapor monitoring plan is in conformance with EPA requirements and no further Soil Vapor Monitoring Plans or revisions are anticipated.

L. Performance Evaluation Reports

Performance Evaluation Reports shall include all relevant data and information required to assess the success of soil and groundwater RAs in meeting the cleanup goals. Separate sections or volumes of the report shall be used to discuss soil and groundwater data. Performance Evaluation Reports shall be provided based on the schedule in this SOW. In general, the reports provide the following information:

- Summaries of monitoring activities conducted since the previous reporting period; measured soil gas and groundwater COC concentrations at wells and at treatment system inlets and outlets; groundwater levels at monitoring wells; charts showing COC concentrations and groundwater levels versus time; and any other relevant preliminary calculations and supporting data used to evaluate system performance.
- Water level contour maps showing the most recently-measured water levels, capture zones for extraction wells; measured COC concentrations and associated contour maps; the interpreted extent of COCs; groundwater modeling results used to confirm groundwater capture (while minimizing commingling with off-Site plumes), including a detailed description and explanation (if applicable) of improvements made to the computer model; and, extraction well zone of capture analysis, using the latest the EPA guidelines as described in *A Systematic Approach for Evaluation of Capture Zones at Pump and Treat Systems* http://www.epa.gov/ada/download/ reports/ 600R08003/600R08003.pdf.
- Summaries of relevant operating and field data, including mass removal (current and cumulative); any preliminary calculations and supporting data used to evaluate system performance; descriptions of the nature of, duration of, and response to any operational problems or actions performed to optimize system/RA performance; and any other requirements outlined in the Soil Vapor Monitoring Plan.

After completion of at least one quarterly Site-wide monitoring event for

groundwater and soil vapor, individual COC contour maps or trend plots shall be prepared indicating the extent of the COCs with the highest concentrations (e.g., TCE, cis-1,2-DCE, 1,2-DCA, 1,1-DCA, VC, and 1,4-dioxane in groundwater; and PCE, TCE, cis-1,2-DCE, 1,2-DCA, 1,1-DCA, and VC in soil gas). Additional figures shall be prepared if requested by the EPA, to indicate the extent of COCs in additional depth intervals, or for additional COCs. The assumptions made in averaging, excluding, truncating, or otherwise selecting or manipulating the data used in preparing the contour maps shall be clearly stated.

The *First Semi-Annual 2011 Performance Evaluation Report* (AMEC, July 2011) for the Phase 1 RA was submitted on July 29, 2011, and is in conformance with the requirements presented in this section. Subsequent Semi-Annual Performance Evaluation Reports have also been submitted to EPA (See Table A-2) and are also in conformance with requirements in this section.

M. Progress Reports

The PSDs shall submit monthly progress reports and weekly construction activity reports, as specified in the Section VI (Schedule) of this SOW. The PSDs have submitted the required monthly progress reports and weekly construction activity reports for the Phase 1 RA.

N. Supporting Plans

The PSDs have submitted several Site-specific plans to establish procedures to be followed by the PSDs in performing field, laboratory, and analysis work. These Site-specific plans include:

- Site Management Plan,
- Sampling and Analysis Plans,
- Health and Safety Plan (HASP), and
- Construction Quality Assurance Plan.

The format and scope of each plan shall be modified as needed to describe clarifications to the sampling, analyses, and other activities as the RA progresses. Consistent with the provisions of the Consent Decree, the EPA may modify the scopes of these activities at any time during the RA. All supporting plans for implementation of the Phase 1 RA have been submitted by the PSDs and approved by EPA (See Table A-2). Any future revisions to the Phase 1 Site-specific plans and updates to implement the Phase 2 and 3 RA shall conform to EPA requirements. Each plan will follow the format of the previously-approved plans for the Site.

V. SCHEDULE FOR MAJOR DELIVERABLES AND OTHER TASKS

ACTIVITY	DUE DATE
Effective Date of Consent Decree (CD)	TBD.
Notify EPA of Project Coordinator Selected (as required by Section XVIII)	Twenty-eight (28) [1] days after the lodging of the CD.
Notify EPA of Project Manager selected (as required by Section IX of the CD)	Forty-five (45) days after the lodging of the CD.
Project Planning Meeting with EPA RPM	Thirty (30) days after EPA approval of selected Project Manager.
Planning Documents	
Phase 1 RA - Dual Phase Extraction Work Plan (OU2 DPE WP) and Groundwater Source Area Work Plan (OU1 GSA WP) Characterization of perched aquifer east of HWA	All required Phase 1 OU1 and OU2 planning documents have been submitted and approved by EPA (See Table A-2). Technical Memorandum required 60 days after lodging of CD.
Phase 2 RA	Phase 2 OU1 RA for the Phase 2 OU1 Area has been deferred pending completion of a Monitored Natural Attenuation Assessment evaluation (MNA). If EPA thereafter selects MNA as the Remedial Action in a Consent Decree ROD Amendment, the parties shall modify the Consent Decree pursuant to the provisions of Paragraph 113 of this Consent Decree. If the Court approves the modification, the PSDs shall implement MNA and the Phase 2 RAWP shall include details associated with the implementation of MNA. If EPA does not select MNA as the Phase 2 OU1 Remedial Action, within 12 months of the PSDs receiving such notice from EPA, the PSDs shall submit an FFS to EPA to re-evaluate the feasibility and effectiveness of groundwater extraction and treatment against alternative remedial technologies. The FFS shall include the PSDs' recommendation, if any, of their preferred alternative Remedial Action as an alternative to groundwater extraction and treatment. If, after review of the FFS, EPA selects the PSDs' preferred alternative Remedial Action in a Consent Decree ROD Amendment, the parties shall modify the Consent Decree pursuant to the provisions of Paragraph 113 of this Consent Decree. If the Court approves the modification, the PSDs shall implement such alternative Remedial Action and the Phase 2 RAWP shall include the details associated with implementation

ACTIVITY	DUE DATE
	of such alternative Remedial Action. If EPA selects an alternative Remedial Action for OU1 Phase 2 pursuant to the above, the Phase 2 RAWP will be submitted pursuant to the schedule in the amended SOW after Court approval of the modification of this Consent Decree incorporating the Consent Decree ROD Amendment. If EPA does not select an alternative Remedial Action for OU1 Phase 2 pursuant to the above, then, within six months of the PSDs receiving such notice from EPA, the PSDs shall submit the Phase 2 RAWP for implementation of groundwater extraction and treatment, the Remedial Action selected in the ROD.
Phase 3 RA - Soil Excavation and Disposal and Institutional Controls Work Plan (OU2 Soil E/IC)	Sixty (60) days after completion of the Interim Remedial Action Report for the OU2 DPE System. If necessary, revised Plan(s) due twenty-eight (28) days after receipt of the EPA comments.
Groundwater and Soil Vapor Monitoring Plans	Sixty (60) days after the EPA approval of each RA Work Plan. If necessary, revised Plan(s) due twenty-eight (28) days after receipt of the EPA comments. Note that both Phase 1 Monitoring Plans have been submitted and approved for Phase 1 RA OU1 and OU2.
Remedial Action	
Construction Bid Packages	Thirty (30) days after the EPA approval of RA Work Plan (the EPA review time is expected to be twenty-eight (28) days).
Selection of Construction Contractor	Sixty (60) days after issuance of bid packages.
Notify EPA of Construction Contractor selected	Within five (5) days of selection.
Pre-Construction Meeting	Fourteen (14) days after the selection of Construction Contractor.
Initiate Construction	Thirty (30) days after Pre-Construction Meeting
Complete Construction	Per schedule approved by EPA in the RA Work Plan
Pre-Final Construction Inspection	Fourteen (14) days after PSDs determine that all aspects of the plans and specifications for the RA have been implemented and are operating as designed.
Pre-Final Construction Inspection Report	Twenty-one (21) days after Pre-Final Construction Inspection.
Final Construction Inspection (if needed)	Twenty-one (21) days after Pre-Final Construction Inspection Report.
Final Construction Inspection Report (if needed)	Twenty-one (21) days after Final Construction Inspection.

ACTIVITY	DUE DATE
As-Built Construction Drawings	Twenty-eight (28) days after Final Construction Inspection Report If needed, revised drawings twenty-eight (28) days after receipt of the EPA comments.
Remedial Action Construction Completion Report	Sixty (60) days after Final Construction Inspection Report. If needed, revised report due 28 days after receipt of the EPA comments.
Interim Remedial Action Report	Two-hundred and seventy (270) days after the EPA approval of the Remedial Action Construction Report. If needed, revised Report due twenty-eight (28) days after receipt of the EPA comments.
Pre-Certification Inspection for Completion of the Work	Forty-five (45) days after the PSDs conclude that all Work has been performed, including Operation and Maintenance activities, and cleanup goals attained.
Certification that all Work has been Completed	Thirty (30) days after the pre-certification inspection.
Final Remedial Action Report	Ninety (90) days after completion of the pre-certification inspection. If needed, revised report due 28 days after receipt of the EPA comments.
Operation and Maintenance	
Operation and Maintenance Manuals	Ninety (90) days after construction of the RA is initiated. If requested by the EPA, revised Manual due twenty-eight (28) days after receipt of the EPA comments.
Operation and Maintenance Manuals (continued)	Updated Manual due twenty-eight (28) days after Final Construction Inspection to incorporate any design modifications made during RA (or written statement that update is unnecessary). If requested by the EPA, revised updated Manual due twenty-eight (28) days after receipt of the EPA comments.
Performance Evaluation	
Performance Evaluation Reports	Due every six (6) months, (or when RA satisfies Operational and Functional criteria, whichever is earlier) beginning ninety (90) days after the EPA approval of Groundwater and Soil Monitoring Plans.
Progress Reports	Due monthly, beginning sixty (60) days after lodging of the CD. Reporting frequency can be reduced at the discretion of EPA.

ACTIVITY	DUE DATE
	Due weekly during construction work, Construction Activity Progress Reports beginning when construction is initiated. Reporting frequency can be reduced at the discretion of EPA.
Supporting Plans	
Site Management Plan	Submitted with any plan requiring field activities (i.e., RA Work Plans, Groundwater Monitoring Plan, etc.).
Sampling and Analysis Plan	Submitted with any plan requiring field activities (i.e., RA Work Plans, Groundwater Monitoring Plan, etc.).
Site Health and Safety Plan	Submitted with any plan requiring field activities (i.e., RA Work Plans, Groundwater Monitoring Plan, etc.).
Construction Quality Assurance Plan	No later than the date of the RA Work Plan submittals.

1 – Days are calendar days.

2 – All deliverables under this section are required for each of the four Work Plans. Remedial Action Construction Reports and Interim and Final Remedial Action Reports will be prepared separately for each OU.

VI. REFERENCES

The following list, although not comprehensive, provides citations for many of the regulations and guidance documents that apply to the RD/RA process. PSDs shall review these guidance documents and shall use the information provided therein in performing the RA and preparing all deliverables under this SOW. Instructions for access to the EPA guidance documents referenced in the SOW are either included in the SOW or can be found by searching the EPA website using the specific reference provided below. The list also includes the technical documents produced for the Cooper Drum Company Site beginning with remedial investigation and going through to the RD (i.e., ROD, Groundwater [OU1] Remedial Design Report, etc.). Access to technical documents produced for the Cooper Drum Company Site is available online: http://yosemite.epa.gov/r9/sfund/r9sfdocw.nsf/vwsoalphabetic/Cooper+Drum+Co.?OpenDocument

After entering this website, scroll down to Site documents and reports.

EPA Guidance Documents:

"Superfund Remedial Design/ Remedial Action Handbook," EPA, Office of Emergency and Remedial Response, June 1995 (EPA 540/R-95/059).

"EPA NEIC Policies and Procedures Manual," EPA, May 1978, revised May 1986.

"Guidance on Systematic Planning using the Data Quality Objectives Process (DQO)" EPA, February 2006, (EPA QA/G-4), EPA/240/B-06/001.

"Uniform Federal Policy for Quality Assurance Project Plans (UFP-QAPP)," EPA, March 2005 (EPA-505-B-04-900A).

"Preparation of a EPA Region 9 Field Sampling Plan for Private and State-Lead Superfund Projects," April 1990, EPA, (No. 9QA-06-89).

"Guidance on Remedial Actions for Contaminated Ground Water at Superfund Sites," EPA, Office of Emergency and Remedial Response (Draft), OSWER Directive No. 9283.1-2.

"Methods for Monitoring Pump-and-Treat Performance," EPA, Office of Research and Development, June 1994 (EPA 600/R-94/123).

"A Systematic Approach for Evaluation of Capture Zones at Pump and Treat Systems," EPA, January 2008 (EPA/ 600/R-08/003).

"Close Out Procedures for National Priorities List Sites," January 2000, EPA 540-R-98-016, OSWER Directive 9320-2-09A-P.

"Operation and Maintenance in the Superfund Program" (OSWER 9200.1-37FS, EPA 540-F-01-004, May 2001)

"Use of Monitored Natural Attenuation at Superfund, RCRA, Corrective Action and Underground Storage Tank sites" (EPA/600R-98/128), April 1999

A Guideline for Assessing Biodegradation and Source Identification of Organic Ground Water Contaminants using Compound Specific Isotope Analysis (CSIA), (EPA 600/R-08/148), December 2008

Site Documents:

United States Environmental Protection Agency (EPA), 2002. Record of Decision, Cooper Drum Company, City of South Gate, California. September

URS Group, Inc. (URS), 2002. Cooper Drum Remedial Investigation Feasibility Study Report. May

URS, 2005. Final Results of HRC Field Pilot Study. April.

URS, 2006. Remedial Design Technical Memorandum for Field Sampling Results. July.

URS, 2006. Field Pilot Study of ISCO Using Ozone and Hydrogen Peroxide. December.

URS, 2007. Remedial Design Technical Memorandum for Field Sampling Results, Addendum No. 2 CPT/HydroPunch Sampling Results February/March 2007. June.

URS, 2007. Remedial Design Technical Memorandum for Field Sampling Results, Addendum No. 1 Groundwater Monitoring Report August 2006. March.

URS, 2007. OU1 Groundwater Remedy Conceptual Design, Cooper Drum Company Site, South Gate, CA. May.

URS, 2007. Soil Remedial Design Report Operable Unit 2 Cooper Drum Company Superfund Site. September.

URS, 2007. Groundwater Remedial Design Report Operable Unit 1 Cooper Drum Company Superfund Site. September.

URS, 2008. Remedial Design Technical Memorandum for Field Sampling Results, Addendum No. 3 Monitor Well Installation and Groundwater Sampling Results. September.

ITSI, 2010. Remedial Design Technical Memorandum For Field Sampling Results Addendum No. 4, Monitor Well Installations, Pumping Test, and Groundwater Sampling Results, April/May 2009 Cooper Drum Company Superfund Site. February.

ATTACHMENT A

TABLE A-1

Cleanup Levels for Chemicals of Concern
Cooper Drum Company Superfund Site

Medium	Chemical of Concern	Cleanup Level	Basis for Cleanup Level	Risk at Cleanup Level
Soil (VOCs)	1,1-Dichloroethane (1,1-DCA)	Leachate<MCL[a]	VLEACH modeling	TBD
	1,1-Dichloroethene (1,1-DCE)	Leachate <MCL	VLEACH modeling	TBD
	1,2-Dichloroethane (1,2-DCA)	Leachate <MCL	VLEACH modeling	TBD
	1,2-Dichloropropane (1,2-DCP)	Leachate <MCL	VLEACH modeling	TBD
	1,2,3-Trichloropropane (1,2,3-TCP)	Leachate <PQL	VLEACH modeling	TBD
	Benzene	Leachate <MCL	VLEACH modeling	TBD
	cis-1,2-Dichloroethene (cis-1,2-DCE)	Leachate <MCL	VLEACH modeling	TBD
	trans-1,2-Dichloroethene (trans-1,2-DCE)	Leachate <MCL	VLEACH modeling	TBD
	Tetrachloroethene (PCE)	Leachate <MCL	VLEACH modeling	TBD
	Trichloroethene (TCE)	Leachate <MCL	VLEACH modeling	TBD
	Vinyl chloride	Leachate <MCL	VLEACH modeling	TBD
Soil (non-VOCs)	Aroclor-1254	870 µg/kg	Human health hazard	1 e-05
	Aroclor-1260	870 µg/kg	Human health hazard	1 e-05
	B (a)P-TE [b] – Benzo(a)anthracene – Benzo(a)pyrene – Benzo(b)fluoranthene – Benzo(k)fluoranthene – Chrysene – Dibenz(a,h)anthracene – Indeno(1,2,3-cd)pyrene	900 µg/kg	Background	Background
	Lead	400 mg/kg	Human health hazard	IEUBK Model
Groundwater (VOCs)	1,1-Dichloroethane (1,1-DCA)	5 µg/L	MCL	Cancer risk at 2.6e-06
	1,1-Dichloroethene (1,1-DCE)	6 µg/L	MCL	HI = 0.04
	1,2-Dichloroethane (1,2-DCA)	0.5 µg/L	MCL	Cancer risk at 4.0e-06
	1,2-Dichloropropane (1,2-DCP)	5 µg/L	MCL	Cancer risk at 3.1e-05
	1,2,3-Trichloropropane (1,2,3-TCP)	1 µg/L	PQL [c]	Cancer risk at 6.2e-04

Medium	Chemical of Concern	Cleanup Level	Basis for Cleanup Level	Risk at Cleanup Level
	Benzene	1 µg/L	MCL	Cancer risk at 9.0e-06
	cis-1,2-Dichloroethene (cis-1,2-DCE)	6 µg/L	MCL	HI = 0.23
	trans-1,2-Dichloroethene (trans-1,2-DCE)	10 µg/L	MCL	HI = 0.19
	Tetrachloroethene (PCE)	5 µg/L	MCL	Cancer risk at 1.2e-05
	Trichloroethene (TCE)	5 µg/L	MCL	Cancer risk at 4.9e-06
	Vinyl chloride	0.5 µg/L	MCL	Cancer risk at 2.2e-05
1,4-Dioxane	1,4-Dioxane	TBD	TBD	TBD

[a] The cleanup level for soil VOCs is based on the soil concentration derived from VLEACH modeling that would not impact groundwater at levels above MCLs in the Gaspur aquifer. MCLs are from Title 22 California Code of Regulation Section 64431 and 64444 unless otherwise specified. The soil gas sample analytical can also be used (along with indoor air and groundwater sampling results to derive the respective screening levels by media) to support a multiple lines of evidence (MLE) evaluation approach for vapor intrusion.

[b] Based on UTL background benzo(a)pyrene-toxicity equivalent (B(a)P-TE) concentration for southern California PAH data set.

[c] No MCL established for 1,2,3-trichloropropane. The PQL of 1 g/L was identified as a remedial goal for 1,2,3-trichloropropane in the ROD.

[d] No MCL has yet been established for 1,4 dioxane as of the date of this Consent Decree, as more particularly discussed in Section III above.

DCA = dichloroethane

DCE = dichloroethene

DCP = dichloropropane

HI = hazard index

IEUBK Model = Integrated Exposure Uptake Model for Lead in Children

MCL = California primary maximum contaminant level

mg/kg = milligram per kilogram

PAH = polycyclic aromatic hydrocarbons

PQL	=	Practical quantification limit
TBD	=	to be determined
TCP	=	trichloropropane
UTL	=	upper tolerance limit
VOC	=	volatile organic compound
µg/L	=	micrograms per liter
µg/kg	=	micrograms per kilogram

TABLE A-2

Cooper Drum Cooperating Parties Group Document List
Cooper Drum Company Superfund Site

Document Title	EPA Approval
Final Remedial Action Work Plan for Phase 1 OU2 (November 6, 2009)	February 26, 2010
Site Management Plan (December 7, 2009)	April 12, 2010
Site Health and Safety/Contingency Plan (December 2009)	April 12, 2010
Sampling and Analysis Plan for Dual Phase Extraction Pilot Testing Phase 1 OU2 (March 15, 2010)	March 25, 2010
Final Remedial Action Work Plan for Phase 1 OU1 (April 13, 2010)	March 24, 2010
Sampling and Analysis Plan for Supplemental Investigation Phase 1 OU1 and OU2 (May 4, 2010)	April 13, 2010
Supplemental Investigation Report (October 22, 2010)	NA
Construction Quality Assurance Plan Phase 1 OU1 and OU2 (November 17, 2010)	August 18, 2010
Final Soil Vapor Monitoring Plan OU2 (June 10, 2011)	February 21, 2011
Final Addendum to the Final Remedial Action Work Plan (Dual Phase Extraction Pilot Test Report) Phase 1 OU2 (June 2011)	February 21, 2011
Sampling and Analysis Plan for Groundwater Sampling OU1 (June 14, 2011)	April 6, 2011
Sampling and Analysis Plan for Soil Vapor Monitoring OU2 (June 14, 2011)	May 4, 2011
Groundwater Monitoring Plan OU1 (June 2, 2011)	May 11, 2011
Addendum to the Final Remedial Action Work Plan for Phase 1 OU1 (June 8, 2011)	May 11, 2011
Draft Operations and Maintenance Manual for Dual Phase Extraction System Phase 1 OU2 (September19, 2011)	July 25, 2012
Monitored Natural Attenuation Assessment Work Plan (October 28, 2011)	November 2011
Replacement of Vapor Treatment Technologies Technical Memorandum (December 5, 2011)	December 15, 2011
Proposed Modifications To off-Site Extraction Well Network Technical Memorandum (June 5, 2012)	July 10, 2012
Soil Gas Cleanup Levels Report (February 20, 2013)	To be determined.
Modifications to Off-Property Extraction Well Network (May 16, 2014)	June 6, 2014

NA = Not Applicable

UNITED STATES DISTRICT COURT
CENTRAL DISTRICT OF CALIFORNIA
WESTERN DIVISION

UNITED STATES OF AMERICA, & STATE OF CALIFORNIA,	)	CIV. NO.:
Plaintiffs,	)	
v.	)	CONSENT DECREE
AC PRODUCTS, INC., et al.	)	
Defendants.	)	

Appendix D-1

Groundwater Remedial Design Report

URS

September 19, 2007

Mr. Eric Yunker
Superfund Project Manager
U.S. Environmental Protection Agency, Region IX
75 Hawthorne Street (SFD-7-3)
San Francisco, CA 94105

Subject: **RAC IX Contract No. W-98-225**
Cooper Drum Company WA No. 247-RDRD-091N
Transmittal of Final OU1 Groundwater Remedial Design Report

Dear Mr. Yunker:

This letter transmits two copies of the OU1 Groundwater Remedial Design Report for the Cooper Drum Company Superfund Site in South Gate, California. DTSC and EPA Region 9 comments have been incorporated into the final document.

If you have any questions or require further information, please contact me at (916) 679-2049.

Sincerely,

URS Group, Inc.

Don Gruber
Task Manager

Edmund D. Tarter
Project Engineer

REGISTERED PROFESSIONAL ENGINEER
EDMUND D. TARTER
No. 64825
Exp. 6/30/09
CIVIL
STATE OF CALIFORNIA

Attachment

cc: Lori Parnass DTSC (1 copy w/attachment)
Site Repository, South Gate, CA (1 copy w/attachment)
Project File (w/attachments)
Chron File (w/o attachments)

URS Group, Inc.
Crown Corporate Center
2870 Gateway Oaks Drive, Suite 150
Sacramento, CA 95833-3200
Tel: 916.679.2000
Fax: 916.679.2833

J:\Cooper Drum\Tarter\GW BDR\FinalGW_RDR trans_ltr_EPAR9.doc

18500147.11010

GROUNDWATER REMEDIAL DESIGN REPORT
OPERABLE UNIT 1
COOPER DRUM COMPANY SUPERFUND SITE

Prepared for:

Contract No. 68-W-98-225/WA No. 247-RDRD-091N
U.S. Environmental Protection Agency, Region 9
75 Hawthorne Street
San Francisco, California 94105

Prepared by:

URS Group, Inc.
2870 Gateway Oaks Drive, Suite 150
Sacramento, California 95833

September 19, 2007

TABLE OF CONTENTS

Page

ACRONYMS AND ABBREVIATIONS v

ES.0 EXECUTIVE SUMMARY ES-1
ES.1 SITE HISTORY ES-1
ES.2 CONTAMINANTS OF CONCERN AND CLEANUP GOALS ES-2
ES.3 HYDROGEOLOGIC FEATURES ES-2
ES.4 ROD SELECTED REMEDY FOR OU1 GROUNDWATER ES-3
ES.5 DESIGN STRATEGY FOR OU1 SOURCE AREA ES-3
ES.6 DESIGN STRATEGY FOR OU1 DOWNGRADIENT CONTAINMENT AND TREATMENT STRATEGY ES-4

1.0 INTRODUCTION 1-1
1.1 PURPOSE AND OBJECTIVES 1-1
1.2 SITE DESCRIPTION AND HISTORY 1-3
1.2.1 Site Description 1-3
1.2.2 Site History 1-3
1.2.3 Current Site Operations 1-4

2.0 REMEDIAL INVESTIGATION SUMMARY 2-1
2.1 PREVIOUS INVESTIGATIONS 2-1
2.2 SUPPLEMENTAL RI DATA 2-3
2.2.1 Rationale for the 2007 CPT/HydroPunch Investigation 2-3
2.2.2 2007 CPT/HydroPunch Sampling Results 2-4
2.3 RECOMMENDATIONS FOR NEW MONITORING WELLS 2-5
2.4 PILOT STUDY RESULTS AND JUSTIFICATION OF DESIGN ASSUMPTIONS 2-6
2.4.1 HRC Pilot Test Description 2-6
2.5 ISCO PILOT TEST SUMMARY 2-7
2.5.1 ISCO Pilot Test Description and Results 2-7

3.0 SUMMARY OF RECORD OF DECISION 3-1
3.1 SELECTED ACTION FOR GROUNDWATER 3-1
3.2 DETAILED DESCRIPTION OF THE ROD-SELECTED REMEDY 3-1
3.3 RATIONALE FOR THE SELECTED REMEDY 3-2
3.4 COMPLIANCE WITH APPLICABLE OR RELEVANT AND APPROPRIATE REQUIREMENTS (ARARS) 3-3

4.0 DETAILED DESIGN FOR GROUNDWATER REMEDIATION 4-1
4.1 STRATEGY FOR FULL-SCALE SYSTEM DESIGN 4-1
4.2 OU1 REMEDIAL DESIGN 4-2
4.2.1 Source Area Strategy 4-2
4.2.2 Remedial Design for Source Area Groundwater 4-2

TABLE OF CONTENTS (Continued)

Page

4.2.3 Downgradient Containment and Treatment Strategy 4-3
4.2.4 Remedial Design for Downgradient Containment and Treatment of Groundwater 4-4
4.2.5 Groundwater Extraction Well Placement and Zone of Capture 4-5
4.2.6 ISCO Radius of Influence 4-5
4.2.7 ISCO Injection Depth 4-5
4.2.8 Ozone/Hydrogen Peroxide Injection Well Details 4-6
4.2.9 In Situ Ozone and Hydrogen Peroxide Injection 4-6
4.2.10 Downgradient Containment and Treatment System 4-7
4.2.11 Manifold and Piping Design 4-7
4.3 PERFORMANCE SAMPLING ASSUMPTIONS 4-8
4.3.1 Performance and Compliance Monitoring 4-9
4.3.2 Post-Remediation Confirmation Compliance Monitoring 4-9
4.4 TREATMENT SYSTEMS MONITORING 4-10
4.5 INSTRUMENTATION 4-11
4.6 ELECTRICAL CONTROLS 4-12
4.7 PROCESS SAFETY CHECKLIST 4-12
4.8 DESIGN ASSUMPTIONS FOR GROUNDWATER TREATMENT 4-13
4.8.1 Media, Byproducts, and Process Rates 4-13
4.8.2 Waste Stream Qualities 4-13
4.8.3 Performance Standards 4-14
4.8.4 Long-Term Performance Monitoring 4-14
4.8.5 Project Quality Checklist, Pertinent Codes, and Standards 4-14
4.8.6 Other Technical Factors 4-14

5.0 CONSTRUCTION AND IMPLEMENTATION 5-1
5.1 PLANS 5-1
5.2 DESIGN DRAWINGS 5-1
5.3 SPECIFICATIONS 5-1
5.4 SCHEDULE 5-1
5.5 COST ESTIMATE 5-2
5.6 CONTRACTOR QUALIFICATIONS 5-2
5.7 COOPER DRUM PROPERTY SITE ACCESS 5-2
5.8 OFF-SITE EASEMENT AND ACCESS. 5-2

6.0 ENVIRONMENTAL AND PUBLIC IMPACT REDUCTION PLAN 6-1
6.1 SECURITY AND FENCING 6-1
6.2 ELECTRICAL GROUNDING 6-1
6.3 VISUAL SCREENING 6-1
6.4 SPILL CONTAINMENT 6-2

7.0 REFERENCES 7-1

LIST OF APPENDICES

APPENDIX A Contaminants of Concern (COC) Chemical Property Summaries
APPENDIX B Historical VOC and 1,4-Dioxane Data and Addendum to Remedial Design Technical Memorandum for Field Sampling Results
APPENDIX C ARARs Summary
APPENDIX D HRC and ISCO Pilot Test Data
APPENDIX E Mechanical Equipment Technical Information (Vendor Information)
APPENDIX F Groundwater Flow Model Documentation
APPENDIX G Construction Quality Control Plan
APPENDIX H Operations and Maintenance Manual
APPENDIX I Design Calculations

LIST OF TABLES

(Provided at the end of this report)

2-1 Groundwater Contaminants of Concern and Cleanup Levels

4-1 Monitor Well Sampling Summary
4-2 Treatment System Sampling Summary
4-3 Design Assumptions for OU1 (Groundwater Remedial Action)

LIST OF FIGURES

(Provided at the end of this report)

1-1 Site Location Map
1-2 Site Layout Map

2-1 Generalized Geologic Cross-Section
2-2 Existing Well Locations and 2007 CPT/HydroPunch Results
2-3 Proposed Monitor Well Locations for the Remedial Action
2-4 ISCO Field Pilot Test Layout
2-5 ISCO Pilot Test Injection Well Layout

4-1 Source Area Remediation System
4-2 OU1 Source Area Remediation System Map
4-3 Downgradient Containment Remediation System, Two Groundwater Extraction Wells (20 gpm each)

This page intentionally left blank

ACRONYMS AND ABBREVIATIONS

AOC	Administrative Order on Consent
AOP	advanced oxidation process
ARARs	applicable or relevant and appropriate requirements
bgs	below ground surface
COC	contaminant of concern
CPT	cone penetrometer test
CERCLA	Comprehensive Environmental Response, Compensation, and Liability Act
CPVC	chlorinated polyvinyl chloride
CQCP	Construction Quality Control Plan
DCA	dichloroethane
DCE	dichloroethene
DCP	dichloropropane
DEW	downgradient extraction well
DHS	Department of Health Services
DO	dissolved oxygen
DPA	Drum Processing Area
DPE	dual-phase extraction
DTSC	California Department of Toxic Substances Control
EH&S	environmental health and safety
EPA	United States Environmental Protection Agency
EW	extraction well
GAC	granular activated carbon
gpm	gallons per minute
H_2O_2	hydrogen peroxide
HASP	Health and Safety Plan
HDPE	high density polyethylene
HRA	health risk assessment
HRC	Hydrogen Release Compound
H&S	health and safety
HWA	Hard Wash Area
ISCO	in situ chemical oxidation
LEL	lower explosive limit
LACDHS	Los Angeles County Department of Health Services
LACSD	Los Angeles County Sanitary District
LGAC	liquid-phase granular activated carbon

ACRONYMS AND ABBREVIATIONS (CONTINUED)

MCL	California maximum contaminant level
mg/L	milligrams per liter
mV	millivolts
MW	monitoring well
NAPL	non-aqueous phase liquids
NCP	Natural Oil and Hazardous Substances Pollution Contingency Plan
NEC	Natural Electrical Code
NFPA	Natural Fire Protection Association
NPL	Natural Priorities List
O_3	ozone
O&M	operation and maintenance
OD	outer diameter
ORP	oxidation-reduction potential
OSWER	EPA's Office of Solid Waste and Emergency Response
OU	operable unit
PCE	tetrachloroethene
PFD	process flow diagram
PLC	programmable logic controller
ppb	parts per billion
PQL	practical quantification limit
PRG	preliminary remediation goal
PRP	potentially responsible party
psi	pounds per square inch
PVC	polyvinyl chloride
POTW	Publicly Owned Treatment Works
QA	quality assurance
RA	remedial action
RAO	remedial action objective
RAWP	Remedial Action Work Plan
RD	remedial design
RDR	Remedial Design Report
RI	remedial investigation
RI/FS	remedial investigation/feasibility study
ROD	record of decision
ROI	radius of influence
RPO	remedial process optimization
RWQCB	Regional Water Quality Control Board

ACRONYMS AND ABBREVIATIONS (CONTINUED)

SAP	Sampling and Analysis Plan
SARA	Superfund Amendments and Reauthorization Act
SCADA	supervisory control and data acquisition
scfm	standard cubic feet per minute
SVE	soil vapor extraction
SVOC	semivolatile organic compound
TBC	to-be-considered
TCE	trichloroethene
TCP	trichloropropane
TDS	total dissolved solids
TEFC	totally enclosed, fan-cooled
URS	URS Group, Inc.
VC	vinyl chloride
VOC	volatile organic compound
µg/L	micrograms per liter

ES.0 EXECUTIVE SUMMARY

This Remedial Design Report (RDR) presents the detailed design of the selected remedial action (RA) for the groundwater Operable Unit 1 (OU1) at the Cooper Drum Company Site (Site), located at 9316 South Atlantic Avenue, in South Gate, Los Angeles County, California.

The OU1 (alternatively referred to as "impacted groundwater" or simply, "groundwater," throughout this report) RA includes remedial systems for the source area and hydraulic control (containment) and treatment for the leading edge of the groundwater plume.

The groundwater Source Area RA (Source Area System) consists of the following components:

- Injection of ozone and hydrogen peroxide into the source area groundwater (i.e., in situ chemical oxidation [ISCO] using injection wells that form a permeable barrier to groundwater flow);
- Extraction of groundwater downgradient of the ISCO barrier; and
- Aboveground treatment and re-injection of this extracted groundwater upgradient of the ISCO barrier.

The groundwater Downgradient Containment and Treatment RA (Downgradient Containment/Treatment System) includes:

- Extraction of groundwater near the leading edge of the plume;
- Installation of a permeable bioremediation barrier in the mid-plume area upgradient of the groundwater extraction; and
- Discharge to sanitary sewer, with pretreatment of the extracted groundwater, if needed.

This RDR provides the design criteria, including the design assumptions and parameters, used in developing the remedial design (RD) for OU1.

ES.1 SITE HISTORY

Since 1941, the Site was used by several companies to recondition and recycle used steel drums that once contained various industrial chemicals. The Cooper Drum Company operated from 1972 to 1992, reconditioning drums using a process that consisted of flushing and stripping the drums for painting and resale. Drum process waste was collected in open concrete sumps and trenches, resulting in releases to soil and groundwater beneath the site.

By 1992, when the drum reconditioning business had been sold to Waymire Drum Company, the Cooper Drum Company facilities were retrofitted to provide an aboveground, enclosed system for containing liquids and wastes. Closed-top steel tanks were installed over the sumps, and the trenches were replaced with hard piping. The former hard-wash area (HWA) was closed and replaced with a new HWA in the Drum Processing Area (DPA), which also provided hard piping and secondary containment. Waymire Drum Company continued to operate the facility until 1996. Consolidated Drum Company was the drum-reconditioning

operator at the Site from 1996 until their departure in 2003. The facility was fitted to process plastic totes (large square containers) during this period.

Since 2003, drum processing operations no longer occur at the Site and all drum processing equipment has been removed from the Site. Following the removal the drum processing operations, there were four new tenants at the Site, including a pallet company, a trucking and towing company, and two automotive repair/ salvage companies. As of June 2006, the automotive repair/salvage companies moved operations off site and the pallet company expanded there operations to the vacant property.

The United States Environmental Protection Agency (EPA) conducted remedial investigation (RI) activities for Cooper Drum from 1996 to 2001. In June 2001, EPA added the Site to the National Priority List (NPL) of hazardous waste sites requiring remedial action. Site investigations conducted as part of the RI identified the former HWA as the primary source of contamination. The DPA also was identified as a source of contamination as a result of chemical spills that were documented during the 1980s. Following the remedial investigation/feasibility study (RI/FS) process, the Record of Decision (ROD) for the Site was signed on September 28, 2002.

ES.2 CONTAMINANTS OF CONCERN AND CLEANUP GOALS

Twelve hazardous substances are considered contaminants of concern (COCs) in OU1 groundwater: 1,2,3-trichloropropane (TCP); trichloroethene (TCE); 1,2-dichloroethane (DCA); vinyl chloride (VC); 1,2-dichloropropane (DCP); 1,1-DCA; cis-1,2-dichloroethene (DCE); tetrachloroethene (PCE); trans-1, 2-DCE; benzene; 1,1-DCE; and 1,4-dioxane.

Except for 1,4-dioxane, which is a semivolatile organic compound (SVOC), all the other COCs are volatile organic compounds (VOCs). As stated in the ROD, the remedial action objective (RAO) for groundwater is restoration of the groundwater (through treatment) for beneficial use. Therefore, the cleanup goal for the majority of the Site VOCs is to achieve maximum contaminant levels (MCLs). However, the cleanup goal for 1,2,3-TCP and 1,4-dioxane (for which an MCL has not been defined) is to achieve the practical quantification limit (PQL) and the preliminary remediation goal (PRG) for protecting sources of drinking water, respectively. See Table 2-1 for a list of all groundwater COCs and their respective cleanup goals.

ES.3 HYDROGEOLOGIC FEATURES

The main hydrogeologic features penetrated by borings and wells completed during the RI field investigation include the Bellflower Aquiclude, the perched aquifer, the Gaspur Aquifer, and the Exposition Aquifer. These units constitute a shallow aquifer and a deeper aquifer. The shallow aquifer consists of the saturated portion of the Bellflower Aquiclude, which incorporates the perched aquifer (approximately 35 to 40 feet below ground surface [bgs]), and the Gaspur Aquifer. The Bellflower Aquiclude extends to a depth of approximately 70 feet bgs, where the Gaspur Aquifer, which extends to a depth of approximately 110 to 120 feet bgs, underlies it. The upper portion of the deeper aquifer system is represented by the Exposition Aquifer, which underlies the shallow aquifer. The Exposition Aquifer has not been impacted by contamination originating from the Site.

Data from investigations at the Site and adjacent sites indicates that groundwater flows in a predominantly southerly direction. Additionally, the groundwater contamination from adjacent sites have commingled with and impacted the Site plume.

ES.4 ROD SELECTED REMEDY FOR OU1 GROUNDWATER

The Cooper Drum ROD (EPA, 2002) states the following selected remedy for the OU1 contaminated groundwater:

> "The cleanup strategy for groundwater contaminated with VOCs will use a combination of methods to achieve remedial goals and to restore the potential beneficial use of the aquifer as a drinking water source. An extraction/treatment system will be used for containment and remediation. Chemical in situ treatment will also be used to enhance the treatment of VOCs in groundwater, minimize the need for extraction, and reduce the potential for other VOC plumes in the vicinity to impact Cooper Drum."

The groundwater remedy design strategy, as described in Sections ES.5 and ES.6, respectively, for the contaminated plumes in the source area and the downgradient area, is consistent with the ROD selected remedy.

ES.5 DESIGN STRATEGY FOR OU1 SOURCE AREA

The remedial alternative selected to reduce COC concentrations in the OU1 Source Area is use of ISCO in conjunction with groundwater extraction, treatment, and injection. The OU1 Source Area Design is shown on Sheet C-1 of the design drawings, included under a separate tab to this volume (Volume I) of the report.

Ozone will be used as the primary oxidant during the ISCO activities. Hydrogen peroxide may also be used as a co-oxidant depending on site conditions and the results of the ozone-only injection. The remediation equipment will be capable of injecting both the oxidants.

The results of a bench-scale test and a field treatability test of ISCO, using ozone and hydrogen peroxide (O_3/H_2O_2), have indicated that complete destruction of the Site COCs can be achieved. The destruction mechanism is through direct oxidation by ozone, as well as oxidation by the hydroxyl radical, a potent and non-selective oxidizing reagent. The hydroxyl radical forms when ozone alone is applied, but its formation is enhanced when ozone is combined with hydrogen peroxide in appropriate molar ratios (i.e., less than 1.0 mole: mole of O_3/H_2O_2).

Oxidant injection wells will be installed in the source area (as delineated by a composite 100 parts per billion [ppb] concentration contour of TCE, cis-1,2-DCE, and 1,4-dioxane originating in the former HWA), forming a permeable, V-shaped barrier to the groundwater. Twelve new O_3/H_2O_2 injection wells (henceforth referred to as peroxone wells; denoted P_{ox}-1 through P_{ox}-12) will be installed in the source area. Three existing peroxone wells (M_{ox}-1, M_{ox}-2, and M_{ox}-3), previously used during the field treatability study, will also be utilized. The O_3/H_2O_2 will be supplied via a commercially available ISCO system. Additional components of the OU1 Source Area design strategy will include the following.

- Extraction of groundwater downgradient of the ISCO barrier.
- Aboveground treatment and injection of this extracted groundwater upgradient of the ISCO barrier.

The extraction well, installed downgradient of the ISCO barrier, will provide hydraulic control in the source area, and maximize groundwater flow through the permeable barrier. Based upon flow modeling results, use of groundwater extraction and injection upgradient may also shorten the cleanup time. The placement of the extraction will be geared toward capture of the 10 ppb isoconcentration contour for 1,4-dioxane and any portions of the source area plume that lie beyond the ISCO system area of influence. The extracted groundwater, estimated at approximately 25 gallons per minute (gpm), will be treated aboveground in a VOC and 1,4-dioxane treatment unit. This unit will also be used for cleanup of approximately 5 gpm of groundwater extracted from the perched aquifer (as described in the RDR for soil). A liquid-phase granular activated carbon (LGAC) unit will be used as required, to further polish the treated water. The treated groundwater, at a total rate of approximately 30 gpm, will then be injected into the shallow Gaspur Aquifer via two injection wells, at 15 gpm each, placed upgradient of the permeable ISCO barrier.

ISCO system operation is anticipated to continue over a period of three years, after which the capture and treatment of the residual COCs in groundwater would be addressed by the extraction/treatment system(s) in the source area and/or downgradient area. The ISCO remediation equipment will be housed on Site, in a closed warehouse located along Rayo Avenue, adjacent to the aboveground treatment compound.

ES.6 DESIGN STRATEGY FOR OU1 DOWNGRADIENT CONTAINMENT AND TREATMENT STRATEGY

The OU1 downgradient containment and treatment strategy includes extraction of groundwater at the leading edge of the OU1 contamination plume and the use of an in situ permeable bioremediation barrier (for enhanced reductive dechlorination) to expedite remediation of a portion of the plume between the source area system and the downgradient containment and treatment system.

Two groundwater extraction wells (designed to extract approximately 20 gpm each) will be installed at the leading edge of the 5 ppb TCE groundwater plume (downgradient of the source area extraction well, along McCallum Avenue). A 350-foot-long permeable bioremediation barrier also is to be installed upgradient of the extraction wells, along Southern Avenue, to enhance reductive dechlorination of VOCs in groundwater, as it flows across the barrier. The groundwater RA design currently includes piping of the extracted water back to the Source Area groundwater treatment plant and after treatment (including for 1,4-dioxane, if necessary), to discharge the water to the sanitary sewer location on site. However, a final determination as to whether pretreatment of the extracted water prior to discharge will be necessary can only be made when the two groundwater extraction wells are installed and sampled.

The placement and operation of the groundwater extraction wells will be designed to minimize the impact of adjacent plumes, while also providing hydraulic control of the groundwater through the permeable bioremediation barrier. The combined effect would be to further enhance/accelerate the treatment of Site groundwater and to reduce the time until cleanup goals are reached. Installation of a permeable bioremediation barrier along Southern Avenue would reduce the targeted treatment area for pump and treat to the area between Southern and McCallum Avenues. As mid-plume COC concentrations are biodegraded along Southern Avenue, the results of the Hydrogen Release Compound (HRC) pilot test and analytical pore volume modeling indicate that the required operation time of the extraction wells could be significantly reduced, possibly from upwards of 35 years down to 20 years or less.

1.0 INTRODUCTION

In June 2001, the United States Environmental Protection Agency (EPA) added the Cooper Drum Company Site (Site) to the National Priorities List (NPL) of hazardous wastes sites requiring remedial action. URS Group, Inc. (URS) completed a remedial investigation/feasibility study (RI/FS) report for the Site in May 2002. The RI/FS summarized previous investigations; the nature and extent of contamination; a human health risk assessment (HRA); contaminants of concern (COCs); remedial investigation (RI) activities, conclusions, and recommendations; remedial action objectives (RAOs); and an evaluation of remedial action (RA) alternatives. The selected RAs are detailed in the *Record of Decision, Cooper Drum Company, City of Southgate, California Record of Decision* (EPA, 2002). The Site has been categorized into two operable units (OUs) for the remedial phase: OU1 (alternatively referred to as "impacted groundwater" or simply, "groundwater," throughout this report) consists of the impacted shallow (Gaspur) aquifer; and OU2 consists of the impacted soil and a perched aquifer in the source area. This Remedial Design Report (RDR) presents the detailed design for the groundwater (OU1) RA. The detailed design for the soil and perched aquifer (OU2) RA is presented in the report titled *Soil Remedial Design Report Operable Unit 2 Cooper Drum Company Superfund Site* (URS, 2007a).

1.1 PURPOSE AND OBJECTIVES

This RDR presents the design for the selected impacted groundwater RA at the Cooper Drum Company Site in South Gate, Los Angeles County, California (see Figure 1-1). The groundwater RA includes remedial systems for the source area and hydraulic control (containment) and treatment for the leading edge of the groundwater plume.

The groundwater Source Area RA (Source Area System) consists of the following components:

- Injection of ozone and hydrogen peroxide into the source area groundwater (i.e., in situ chemical oxidation [ISCO] using injection wells that form a permeable barrier to groundwater flow);
- Extraction of groundwater downgradient of the ISCO barrier; and
- Aboveground treatment and re-injection of this extracted groundwater upgradient of the ISCO barrier.

The groundwater Downgradient Containment and Treatment RA (Downgradient Containment/Treatment System) includes:

- Extraction of groundwater near the leading edge of the plume;
- Installation of a permeable bioremediation barrier in the mid-plume area upgradient of the groundwater extraction; and
- Discharge to sanitary sewer, with pretreatment of the extracted water, if needed.

This RDR provides the design criteria, including the design, assumptions, and parameters used in developing the groundwater remedial design (RD). The RA was selected in accordance with the Comprehensive Environmental Response, Compensation, and Liability Act (CERCLA) of 1980, as amended by the Superfund

Amendments and Reauthorization Act of 1986 (SARA), and, to the extent possible, the National Oil and Hazardous Substances Pollution Contingency Plan (NCP). The selection was based on the Administrative Record file for the Cooper Drum Company Site and is detailed in the Record of Decision (ROD) (EPA, 2002).

As stated in the ROD, the cleanup strategy for the Site will use a combination of methods to achieve remedial goals:

- An extraction/treatment system will be used for containment and remediation;
- In situ treatment, in the form of oxidation and/or enhanced reductive dechlorination, will also be used to enhance the treatment of volatile organic compounds (VOCs) in groundwater, minimize the need for extraction, and reduce the potential impact for other VOC plumes in the vicinity to impact Cooper Drum; and
- Treated groundwater will be reinjected into the contaminated aquifer, and/or discharged to the Publicly Owned Treatment Works (POTW) sanitary sewer system.

The RA for impacted groundwater as delineated in this RDR encompasses all the components of the ROD selected remedy. The only exception to the ROD is the addition of the semivolatile organic compound (SVOC) 1,4-dioxane as a Site groundwater COC, as a result of the discovery of this compound during the RD investigation. An advanced oxidation process has been added to the RA to address remediation of this SVOC in the groundwater.

The RA for impacted soil is presented in the above-referenced design document (URS, 2007a). The proposed OU2 soil RA includes:

- Dual-phase extraction (DPE) in two areas of the Site that are believed to be the source areas for vadose zone contamination: the former Hard Wash Area (HWA) and the Drum Processing Area (DPA) (see Figure 1-2);
- The DPE will include soil vapor extraction (SVE) and dewatering of the shallow perched zone, which appears to be continuous beneath the Site;
- Groundwater extracted from the perched aquifer will be treated with an ex situ (aboveground) treatment system; and
- The treatment system effluent will be reinjected into the shallow aquifer along with groundwater from the herein described Source Area RA.

It is anticipated that the OU2/soil RA will be performed prior to, or concurrently with, the OU1/groundwater RA. For improved cost-effectiveness, the same ex situ groundwater treatment system can be used for both OUs. The proposed ISCO barrier in the groundwater source area would be directly beneath the DPE system in the HWA. Therefore, concurrent operation of the groundwater and soil RAs would also afford control of ozone and other off-gases that may escape into the vadose zone from the groundwater.

1.2 SITE DESCRIPTION AND HISTORY

1.2.1 Site Description

The Site is located at 9316 South Atlantic Avenue in South Gate, Los Angeles County, California. It is identified as EPA ID CAD 055753370 (Latitude 33 56' 49" N, Longitude 118 11'42"W). The Site, which consists of 3.8 acres of mixed residential, commercial, and industrial land use, is 10 miles south of Los Angeles and approximately 1,600 feet west of the Los Angeles River (Figure 1-1). Site facilities include drum processing and storage areas, an office, a warehouse, and maintenance buildings. The HWA is in the northeastern area of the Site, which also includes a covered shed area. The drum processing building, which is referred to as the DPA in this report, is located along the southern property boundary. All buildings have concrete floors, and the entire facility has been asphalt-paved since 1986. The Tweedy School on the adjacent property has been closed since 1988 because of a concern that children attending the school could be exposed to contamination migrating off site.

1.2.2 Site History

Following is a history of the Site use for the reconditioning and recycling of steel drums containing residual chemicals.

- Since 1941, the northern portion of the Site has been owned and operated by drum recycling companies. The use and ownership of the southern portion of the Site prior to 1971 is unclear. The Cooper Drum Company purchased both parcels and operated the facility from 1972 until 1992.
- Reconditioning activities took place within the present-day DPA (Figure 1-2), in the central portion of the Site. When necessary, heavy duty cleaning, called "hard washing," was performed in the northeastern portion of the Site (the former HWA shown on Figure 1-2). Caustic fluids, generated by reconditioning and hard washing activities, and waste materials removed from inside the drums were collected in open concrete sumps and trenches. This led to the contamination of the soil and groundwater beneath the Site. Recent investigations have shown that most contamination at the Site can be traced to the HWA and the DPA.
- By 1992, when the drum reconditioning business had been sold to Waymire Drum Company, the Cooper Drum Company facilities were retrofitted to provide an aboveground, enclosed system for containing liquids and wastes. Closed-top steel tanks were installed over the sumps, and the trenches were replaced with hard piping. The former HWA was closed and replaced with a new HWA in the DPA, which also provided hard piping and secondary containment.
- Waymire Drum Company continued to operate the facility until 1996. Consolidated Drum Company was the drum-reconditioning operator at the Site from 1996 until their departure in 2003. The facility was fitted to process plastic totes (large square containers) during this period.

By 1992, an aboveground, enclosed system was used for containing liquids and wastes. The Cooper Drum Company continued to operate the facility until 1992. In 1992, the drum reconditioning business was sold to Waymire Drum Company, which operated the facility until 1996. Since 1996, Consolidated Drum Company has been the drum-reconditioning operator at the Site. The facility was fitted to process plastic totes (large square containers) during this period.

1.2.3 Current Site Operations

Consolidated Drum Company terminated its lease with the Cooper Trust in October 2003 and moved its operations to off-site facilities. All drum-recycling equipment and associated containment piping and tanks were removed from the Site. Currently, the Site is fully operational; however, drum operations no longer occur at the Site. There were four new tenants, including a pallet company, a trucking and towing company, and two automotive repair/salvage companies. As of June 2006, the automotive repair/salvage companies moved operations off-site and the pallet company expanded its operations to the vacant property.

1.3 Report Organization

This RDR includes the following:

- Section 1.0 A brief introduction of the Site, Site history and current Site operations
- Section 2.0 A summary of the remedial investigations performed at the Site
- Section 3.0 A summary of the Record of Decision for the Site
- Section 4.0 The general design strategy and detailed design for the remediation of impacted groundwater
- Section 5.0 The construction and implementation details
- Section 6.0 The environmental and public impact reduction plan
- Section 7.0 References

2.0 REMEDIAL INVESTIGATION SUMMARY

2.1 PREVIOUS INVESTIGATIONS

From 1984 through 1989, the Los Angeles County Department of Health Services (LACDHS) issued several Notices of Violation to the Cooper Drum Company as a result of incidents involving the release of hazardous substances at the Site. The LADHS required the Cooper Drum Company to conduct investigations of soil and groundwater. In 1989, the California Department of Health Services, now known as the Department of Toxic Substances Control (DTSC), also collected soil samples from under the DPA. These studies, coupled with investigations conducted as part of the RI/FS, identified 13 hazardous substances as COCs in groundwater. Except for 1,4-dioxane, which is considered an SVOC, all the other Site COCs are VOCs. The groundwater COCs and their cleanup levels are listed in Table 2-1.

Under LADHS direction, consultants for the Cooper Drum Company excavated and removed contaminated soil from the property and from the adjacent Tweedy Elementary School, after caustic fluids leaked from trenches under the DPA building onto school property. To assess impacts to groundwater in the uppermost aquifer beneath the Site (approximately 40 to 80 feet below ground surface [bgs]), four monitoring wells were installed on Site and one upgradient well was installed off Site.

The groundwater beneath the Site was identified as contaminated with VOCs. In 1987, the City of South Gate closed four municipal water supply wells found to contain PCE. These wells are in South Gate Park, within 1,500 feet southwest of the Site. At that time, the City listed the Cooper Drum Company as a possible source of the PCE contamination; however, recent investigations indicate that groundwater contamination found beneath the Site did not contribute to the deeper groundwater contamination affecting those municipal wells. The groundwater contamination originating from the Site is moving to the south, not toward the municipal wells. It is confined to the upper aquifer and is not currently affecting any drinking water supplies in the City of South Gate, because the municipal wells are completed in deeper aquifers.

The Tweedy School, on the adjacent property, was closed in 1988 because of the concern that children attending the school could be exposed to contamination migrating from the Site and from other industrial operations in the area.

Based on the discovery of the soil and groundwater contamination, EPA first proposed the Cooper Drum Company Site for inclusion on the NPL in 1992. EPA issued the General Notice and 104(e) letters to the Cooper Drum Company owners and operators at that time. During 1993, EPA met with Arthur Cooper, the Site owner and previous operator (before Waymire Drum Company took over operations in 1992), who was considered a potentially responsible party (PRP). The purpose of the meeting was to discuss the special notice letter EPA was planning to send to him and to begin negotiations for an Administrative Order on Consent (AOC) to conduct the RI. Later that same year, the Cooper estate declared bankruptcy upon the death of Mr. Cooper. Given its lack of assets, the Cooper estate was no longer considered a viable PRP to help pay for the Cooper Drum Company investigation and remediation. Consequently, the Site became a fund-lead site, where Superfund trust fund money is used for Site activities. Based on additional Site investigation data collected by EPA, the Site was proposed for the NPL in January 2001. In June 2001, the EPA added the Site to the NPL of hazardous waste sites requiring remedial action.

EPA conducted the RI activities for Cooper Drum from 1996 to 2001. EPA initiated a soil gas survey in 1996 to identify potential hot spots (areas where contaminant concentrations of VOCs are the highest) for a Phase 1 RI. This investigation identified "hot spots" in the vicinity of the former HWA, in the northeastern portion of the property, and in the DPA, in the central portion of the property. The Phase 1 RI was designed to further investigate the potential presence of VOCs, SVOCs, and metals in soil and groundwater beneath the Site and the adjacent Tweedy School property. Based on the results of the Phase 1 RI, EPA expanded its investigation of soil and groundwater to delineate the extent of contamination as part of a Phase 2 RI conducted between September 1998 and March 2001. The complete RI report, Cooper Drum Remedial Investigation Feasibility Study Report (the Site RI/FS) (URS, 2002) was released in May 2002.

The main hydrogeologic features penetrated by borings and wells completed during the RI field investigation include the Bellflower Aquiclude, the perched aquifer, the Gaspur Aquifer, and the Exposition Aquifer. These units constitute a shallow aquifer and a deeper aquifer. The shallow aquifer consists of the saturated portion of the Bellflower Aquiclude, which incorporates the perched aquifer (approximately 35 to 40 feet bgs) and the Gaspur Aquifer. The Bellflower Aquiclude extends to approximately 70 feet bgs, where the Gaspur Aquifer, which extends to a depth of approximately 110 to 120 feet bgs, underlies it. The upper portion of the deeper aquifer system is represented by the Exposition Aquifer, which underlies the shallow aquifer. These hydrogeologic units are presented on generalized geologic cross-sections shown in Figure 2-1.

Nearby properties have undergone investigation as sources of groundwater contamination under the direction of the Los Angeles Regional Water Quality Control Board (RWQCB), including the Jervis Webb site (north of the Site), two former Dial Corporation sites (northeast and east of the Site), and the Seam Master site (southeast of the Site). Data from investigations at these three sites indicate that groundwater flows in a southerly direction. High TCE concentrations in the shallow aquifer have been detected under the Jervis Webb site (33,000 parts per billion [ppb]) and in a downgradient monitoring well (6,700 ppb) 200 feet upgradient from and northeast of the Site. Similar TCE concentrations (up to 16,000 ppb) have been detected in the groundwater beneath the Seam Master site. Given its proximity, the groundwater contamination from Jervis Webb may have commingled with and impacted the Cooper Drum Site plume. Based on investigation activities performed during the RD, groundwater contamination from the Seam Master site has commingled with the downgradient (outside the property boundary) portion of the Cooper Drum Plume. The need to reduce commingling of these two plumes was an important consideration during remedy selection.

The RI/FS (URS, 2002) confirmed that waste collected in open concrete sumps and trenches resulted in releases to soil, and that migration of some of these contaminants impacted the shallow aquifer beneath the Site. The primary source of contamination was the HWA, where drum-processing operations took place until 1976, when they were moved to the DPA on the southern side of the property. The DPA also became a source of contamination as a result of chemical spills that were documented during the 1980s. Beginning in 1987, the Cooper Drum Company facilities were upgraded to prevent any further release of chemical wastes and to meet environmental regulations. By 1992, the former HWA was closed and replaced with a new HWA in the DPA and aboveground, enclosed systems were in place.

Site operations have resulted in the discharge of contaminants to the surface soil, vadose zone, and underlying groundwater. Various chemicals have been released to the Site and VOCs and SVOCs are found in both the vadose zone and groundwater.

2.2 SUPPLEMENTAL RI DATA

The ROD for the Cooper Drum Site was signed on September 28, 2002. The ROD-selected groundwater RA is discussed in Section 3.0 of this RDR.

California DTSC agreed with the selected groundwater remedies stated in the ROD, provided additional data were collected to address data gaps prior to implementation of the selected remedies. EPA included the following component in the selected groundwater remedy to address these concerns.

- Conduct additional groundwater sampling to further define the downgradient extent of the VOC contamination (beyond the property boundary).

This component was addressed and reported in the *Remedial Design Technical Memorandum for Field Sampling Results* (URS, 2006a). Reported data pertinent to soil, soil gas, and the perched aquifer was also presented in the soil RDR (URS, 2007a). However, it was noted in the above-mentioned technical memorandum that additional groundwater sampling was required to accurately define the southeastern groundwater plume boundary. In order to accomplish this, additional depth-discrete groundwater sampling using cone penetrometer testing (CPT) and HydroPunch sampling was conducted during February/March of 2007 and the results were reported in *Addendum No. 2* to the field sampling results (URS, 2007b). This addendum is included as Appendix B to this report. A summary table of historical VOC and 1,4-dioxane groundwater sampling results are also included in Appendix B.

A discussion of the rationale for the CPT/HydroPunch investigation is provided in Section 2.2.1. A summary of the investigation results is presented in Section 2.2.2. On the basis of these results, recommendations for installation of new monitor wells are provided in Section 2.3.

2.2.1 Rationale for the 2007 CPT/HydroPunch Investigation

The 2007 CPT/HydroPunch investigation was performed by EPA to further define the lateral extent of the Cooper Drum Plume and complete the RD for the Site. The CPT/HydroPunch data provide the basis for selecting the locations of new monitor wells. At this time, monitor wells have only been installed within the Cooper Drum plume. New monitor wells would provide a fixed sampling location to:

- Determine groundwater flow direction downgradient of the Site;
- Define plume boundaries;
- Monitor plume migration off-Site; and
- Gauge the effectiveness of remedial actions.

In addition to the above-mentioned reasons, new monitor wells outside the Cooper Drum plume are required to verify the location of other plumes. During the CPT/HydroPunch investigation, depth-discrete groundwater samples collected outside the Cooper Drum plume indicated that the Site plume is commingling with an adjacent plume.

2.2.2 2007 CPT/HydroPunch Sampling Results

Five CPT/HydroPunch borings (CPT-40 through CPT-45) and four HydroPunch-only borings (HydroPunch-8, HydroPunch-26, HydroPunch-35, and HydroPunch-36) were installed between February 26 to March 1, 2007 to obtain lithologic data and/or depth-discrete groundwater samples to further delineate the groundwater contamination. Figure 2-2 shows the CPT and HydroPunch boring locations. The HydroPunch borings were installed at locations which had been sampled during prior investigations (i.e., CPT-8, CPT-26, CPT-35 and CPT-36); therefore, these locations were designated with an HydroPunch, because lithologic data was available from CPTs in the vicinity of the HydroPunch borings.

The lithologic data from the new CPTs were consistent with prior data, which indicated the presence of a relatively sandy unit from approximately 60 to 100 feet bgs. This unit begins in the eastern portion of the Site along Rayo Avenue, and trends to the south and southeast.

VOC and 1,4-dioxane analytical data for the February/March 2007 sampling event are presented in Table 1 of Appendix B (included in Volume II of this report). Select VOC and 1,4-dioxane results are presented on Figure 2-2, which has an expanded base map and also includes the August 2006 TCE results from monitor wells (URS, 2007c). TCE concentrations are considered representative of the lateral extent of the Cooper Drum plume. Results from the February/March 2007 CPT/HydroPunch investigation indicate the following:

- The leading edge of the Cooper Drum plume (as represented by TCE) appears to be slightly south of McCallum Avenue, as depicted on Figure 2-2. The estimated Cooper Drum plume boundary and the plume(s) boundary(s) to the east cannot be finalized until the groundwater flow direction and COC concentrations can be established, based on sampling results from proposed new monitor wells. Based on the current monitor well data, the recent CPT/HydroPunch data, and the water level data from the Cooper Drum Site, the 5 micrograms per liter (µg/L) TCE contour line boundary for the Site plume was estimated for the purpose of developing the groundwater remedial design. Note that an estimated area of plume convergence (commingling with off-site plumes) is depicted on Figure 2-2.
- VOC concentrations in the downgradient area of the Cooper Drum plume appear to be higher in the lower portion (90 to 110 feet bgs) of the Gaspur Aquifer.
- Concentrations (up to 830 µg/L of TCE) of VOCs south of Southern Avenue are significantly above those observed in the Cooper Drum plume. These elevated VOC concentrations are present from the depth range of approximately 62 to 85 feet bgs, beginning at CPT-40 and continuing to the south at CPT-41, CPT-42 and CPT-45. The VOCs would appear to be emanating from the area of CPT-10 and CPT-21, located in the eastern portion of the Seam Master site. Results from these two CPTs have shown TCE concentrations of up to 16,000 µg/L from this depth range. Assuming the source of VOCs at CPT-45 is from the Seam Master site, groundwater flow directions may be south to southwest.
- The high TCE concentration at the 100-foot bgs depth from CPT-40 (as compared to the shallower results) suggest this contamination may not be associated with the Seam Master site and could be associated with the Jervis Webb site and/or the Cooper Drum plume. Further investigations are required to determine the source of this contamination.
- 1,4-Dioxane concentrations appear to higher in the Cooper Drum plume, as compared to results from the CPTs sampled to the east and downgradient of the Cooper Drum plume. Generally, all

1,4-dioxane results from CPT-40 to CPT-42 and CPT 45 were less than 2 µg/L. The only exception would be the 88-foot bgs sample from CPT-40, which showed a 1,4-dioxane concentration of 12 µg/L.

On the basis of the above sampling results, recommendations for new monitor wells are provided in Section 2.5.

2.3 RECOMMENDATIONS FOR NEW MONITORING WELLS

As discussed above, monitor well installations are necessary to confirm the CPT/HydroPunch depth- discrete sampling results, establish groundwater flow patterns, track plume migration, and evaluate the RA performance. Well installations are also necessary within and to the south of the Seam Master Site to further characterize VOC contamination in that area.

To characterize the Cooper Drum plume, recommendations for new monitor well installation are:

- To address the downgradient extent of the Cooper Drum Plume, two monitor well pairs completed in the middle and lower portion of the shallow Gaspur Aquifer are recommended on McCallum Avenue, in the vicinity of CPT-44 and CPT-43 (see proposed new wells MW-34A/B and MW-35A/B on Figure 2-3).
- Two monitor wells completed in the lower portion of the Gaspur Aquifer at the locations of MW-25 and MW-31 are recommended (see proposed new wells MW-25B and MW-31B on Figure 2-3). At these locations, existing wells MW-25 and MW-31 are completed in the middle portion of the Gaspur Aquifer; and MW-26 and MW-32 are completed in the upper portion of the deeper Exposition Aquifer.
- One monitor well screened from 85 to 90 feet in the Gaspur Aquifer, to be located in the vicinity of CPT-35, adjacent to the curb line on Southern Avenue is recommended (see proposed new well MW-38A on Figure 2-3).
- One monitor well pair completed in the middle and lower portion of the shallow Gaspur Aquifer in the vicinity of CPT-22, inside the Site fence line (see proposed new wells MW-39A/B on Figure 2-3).

Data from the proposed new wells would be used to (1) further characterize COC distribution in the Cooper Drum plume and (2) evaluate the effectiveness of the ISCO barrier in the source area and the permeable bioremediation barrier to be installed along Southern Avenue as part of the RA.

Regarding the Site plume commingling with the adjacent plumes to the east, the following recommendations are made:

- Install one monitor well pair to be completed in the middle and lower portion of the shallow Gaspur Aquifer and located on Southern Avenue in the vicinity of CPT 40 (see proposed new wells MW-37A/B on Figure 2-3). The deeper well would be useful to address deep contamination which may be related to upgradient sources. Water levels from these locations should assist in establishing flow directions from the Seam Master site.

- Install one monitor well pair to be completed in the middle and lower portion of the shallow Gaspur Aquifer and located on Adella Avenue, approximately 100 feet south of the intersection of McCallum Avenue (see proposed new wells MW-36A/B Figure 2-3). It is expected that the well completed in the lower Gaspur Aquifer (approximately 95 to 110 feet bgs) would define the downgradient extent of the Cooper Drum plume, since the VOC concentrations above this depth interval appear to be significantly higher than in other areas of the Cooper Drum plume and not attributed to it.

Therefore, the groundwater RA includes the installation of 13 new monitor wells. As shown on Figure 2-3 and discussed in Section 4.2, the RA also includes installation of three new groundwater extraction wells. One well (SEW-1) will be installed just south of the Site along Rayo Avenue and two wells (DEW-1 and DEW-2) will be installed farther south, along McCallum Avenue. Sheet C-6 (Volume I) shows the design drawing for typical single-completion monitor wells and extraction wells.

Until the new monitor wells are installed, there will remain some uncertainty regarding the treatment requirements for the groundwater extracted by the downgradient extraction wells. For example, it is possible that 1,4-dioxane concentrations may be low enough so as to not require treatment. However, based on VOC sample results from the existing monitor wells and from CPT locations, it is expected that VOC concentrations will be greater than cleanup goals and will, therefore, require treatment. Based on these expectations, and in order to effectively use the Site property and existing infrastructure, the groundwater RA design currently includes piping of the extracted water from the downgradient area back up to the Site groundwater treatment compound for treatment of VOCs and, if required, 1,4-dioxane. A final determination as to whether treatment of this water will be required can only be made after the two new extraction wells are installed and additional sampling data are collected prior to implementation of the RA.

2.4 PILOT STUDY RESULTS AND JUSTIFICATION OF DESIGN ASSUMPTIONS

Two field-scale pilot studies have been completed as part of implementation of the RA:

- Hydrogen Release Compound (HRC) Field Pilot Study (URS, 2005)
- ISCO Field Pilot Study using Ozone and Hydrogen Peroxide (URS, 2006b).

2.4.1 HRC Pilot Test Description

The objective of the HRC field pilot study, performed in December 2003, was to evaluate the effectiveness of enhanced reductive dechlorination in reducing VOC concentrations in the Site groundwater. The pilot test comprised of injecting a combination of a less viscous form of HRC (referred to as “HRC primer”), and HRC with added iron gluconate (referred to as “modified HRC”) into the contaminated groundwater. Prior to the field test, it was surmised that the presence of high levels of sulfate naturally present in Site groundwater (at levels of up to several thousand milligrams per liter) might compromise the technology’s effectiveness because sulfate and other soil and groundwater constituents compete for the donated electrons (which are provided by hydrogen that is released as HRC degrades). Sulfate reduction is not necessarily desirable, because it may result in a build-up of sulfides which can, in turn, lead to “sulfide toxicity” and loss of microbial populations in the aquifer. On the other hand, if the produced sulfide binds with metals, for example with iron naturally present in groundwater or iron introduced by the modified HRC, it will likely precipitate in the form of iron sulfides. Therefore, it was hoped that the modified HRC would provide adequate iron to

promote iron sulfide precipitation. The purpose for injection of the less viscous HRC primer was to provide an easily accessible source of hydrogen (electrons), in order to satisfy the electron demand of the competing soil and groundwater constituents.

The HRC test consisted of injecting approximately 4,500 pounds of substrate into a 15-foot by 25-foot grid area (see Figure 2-4, HRC area) in the Site source area. The HRC area is approximately 100 feet upgradient from the ISCO field pilot test area; therefore, contamination originating in the HRC area was expected to impact the oxidation pilot study area after approximately 10 months. The results of groundwater sampling after the start of the HRC pilot study indicated that injection of HRC promoted and enhanced anaerobic bacterial activity and reductive dechlorination, without a significant increase in sulfide concentrations, within distances of 50 feet or more directly downgradient from the test area. (See Appendix D, Volume II, of this report for VOC concentration trends over time in the study area monitor wells.) Based on these results, full-scale application of HRC would be feasible to treat VOCs in groundwater but not to treat 1,4-dioxane (an SVOC) in groundwater. As mentioned above, 1,4-dioxane has been detected in Site groundwater, at levels ranging from below detection levels to several hundred micrograms per liter. By comparison, the drinking water preliminary remediation goal (PRG) for 1,4-dioxane is 6.1 µg/L, and the Department of Health Services (DHS) action level for this compound is 3 µg/L. It was because of the presence of 1,4-dioxane that the ISCO field pilot study was performed.

2.5 ISCO PILOT TEST SUMMARY

This section details the highlights of the ISCO pilot study conducted from July 2005 through June 2006. Additional relevant results and figures are provided in Appendix D, Volume II, of this report. The main purpose of the pilot study was to determine whether inclusion of ISCO in the groundwater remedy for the Site was required to effectively reach the groundwater aquifer cleanup levels. The data monitoring and sampling procedures were geared towards evaluating system performance and checking for reducing COC concentrations without significant rebound. The ISCO technology employed was an advanced oxidation process (AOP) using the application of ozone and hydrogen peroxide.

2.5.1 ISCO Pilot Test Description and Results

The positive findings from an ozone/hydrogen peroxide bench scale study (PRIMA Environmental, 2005) warranted further evaluation during a field pilot-scale study of the technology. The pilot study was conducted approximately 140 feet downgradient from the former HWA, the main contaminant source area. The pilot study installation consisted of a barrier configuration with three ozone/hydrogen peroxide injection wells laterally spaced from 35 and 50 feet apart. The pilot scale study layout is shown on Figure 2-4. Each injection well contained two injection points at approximately 70 and 90 feet bgs (see Figure 2-5). The pilot study monitoring wells (extraction well [EW]-1, monitoring well [MW]-33A/33B, and MW-20/20B) were located downgradient and within a maximum of 30 feet of the three injection wells (M_{OX}-1, M_{OX}-2, and M_{OX}-3). Each monitoring well location included a shallow (approximately 60 to 63 feet bgs) and deep (85 feet bgs) sampling depth.

The pilot study took place over a period of 321 days (approximately 10.5 months). The following general schedule of oxidant injection was employed during this period.

- Ozone only for the first 5 months (148 days) in the three injection wells. Ozone was injected at a rate of 0.5 pound per day for 50 days and then increased to 2 pounds per day for the remainder of the 5-month period.
- Ozone and hydrogen peroxide for the remaining 5.5 months.
- Increasing the ozone and hydrogen peroxide injection rates by focusing the injection into only two injection wells after 8 months, or 244 days. This phase was referred to as "focused injection."
- Increasing the ozone injection rate (by adding a second ozone generator) from 2 to 4 pounds per day, and reducing the hydrogen peroxide injection rate to 0.7-to-1 moles peroxide per moles ozone (mole: mole) after just over 9 months (281 days), and for the remaining 40 days of the pilot study.

Optimal system operating parameters were eventually achieved by performing the following:

- Using continuous downhole monitoring of the dissolved oxygen (DO) and oxidation reduction potential (ORP) to evaluate the lateral and vertical effect of varying the operating parameters, such as oxidant injection cycles and injection locations;
- Focusing/increasing oxidant injection into two injection wells (M_{OX}-1 and M_{OX}-2);
- Reducing the hydrogen peroxide injection rate; and
- Increasing the ozone injection rate from approximately 2 pounds per day to 4 pounds per day.

Air was also injected following each oxidant injection to enhance oxidant distribution. The air volume was increased from 1.1 to 2.2 standard cubic feet per minute (scfm) after 99 days, and then decreased back to 1.1 scfm after 244 days for the remainder of the pilot study.

Over the first 5 months of the pilot study, COC concentrations generally showed an overall decreased in the three shallow monitor wells and one deep well (one shallow well, MW-33A, showed an increase in TCE prior to the end of the 5-month period). After the 5-month period, when both ozone and hydrogen peroxide were being injected, COC concentrations increased slightly and/or stabilized in the two shallow monitor wells (EW-1 at 63 feet bgs [EW-1-63'] and MW-20) and one deeper well (EW-1 at 85 feet bgs [EW-1-85']). The stabilized state persisted in one shallow well (EW-1-63') and continued even after initiation of the focused injection. However, the sampling results at this well conducted 40 days after the ozone injection rate was increased from 2 to 4 pounds showed a decrease of 350 µg/L of 1,4-dioxane and 135 µg/L of TCE. At MW-33A, where TCE concentrations increased prior to the injection of hydrogen peroxide (i.e., towards the end of the first 5-month period), the other COC concentrations continued to show an overall decreasing trend throughout the pilot study. TCE concentrations eventually decreased at this well by 490 µg/L. 1,1-DCA concentrations decreased by an average of 73% in the three shallow wells; this is notable, considering the reluctant nature of chlorinated ethanes to oxidation. Monitoring of the third shallow well (MW-20) was discontinued after injection in the closest injection well (M_{OX}-3) was terminated, as part of the focused injection phase.

In summary, in situ oxidation of Site COCs (including TCE, DCE, DCA, and 1,4-dioxane) was observed in all wells, with significant reductions (up to 90%) in both TCE and 1,4-dioxane concentrations. The largest decreases in concentrations were observed from the three shallow monitoring wells.

Based on the successful destruction of VOCs and 1,4-dioxane, the use of ISCO is now included in the full-scale remedial system for the Site.

3.0 SUMMARY OF RECORD OF DECISION

The ROD for the Cooper Drum Site was signed on September 28, 2002. At the time, the known contaminants in groundwater consisted of VOCs only; therefore, the ROD did not make specific mention of 1,4-dioxane. However, by maintaining a comprehensive approach to cleanup, which employed the use of both in situ and ex situ technologies for cleanup and containment, the ROD-selected remedy for groundwater remains viable for all Site COCs. The RAOs for Cooper Drum, as stated in the ROD, are to protect human health and the environment from exposure to contaminated soil, groundwater, and indoor air, and to restore the groundwater to a potential beneficial use as a drinking water source. The ROD-selected remedy meets these RAOs through treatment of soil and groundwater contaminated with COCs.

3.1 SELECTED ACTION FOR GROUNDWATER

The following paragraphs are excerpts from the Cooper Drum ROD:

- The cleanup strategy for groundwater will use a combination of methods to achieve remedial goals and to restore the potential beneficial use of the aquifer as a drinking water source.
- An ex situ treatment component, consisting of a groundwater extraction and treatment system, will be used for containment and remediation. This ex situ treatment component will utilize presumptive technologies identified in Directive 9283.1-12 from EPA's Office of Solid Waste and Emergency Response (OSWER). One of the presumptive technologies (GAC) will be used for treating aqueous contaminants in the extracted ground water.
- In situ chemical treatment—reductive dechlorination and/or oxidation—will also be used to enhance the treatment of VOCs in groundwater and to minimize the need for extraction and ex situ treatment.
- The actual technologies and sequence of technologies used will be determined during RD. Final selection of these technologies will be based on the outcome of treatability studies to be performed during the RD.

The EPA believes the selected remedy for Cooper Drum meets the threshold criteria and provides the best balance of tradeoffs among the alternatives considered. The EPA expects the selected remedy to satisfy the statutory requirements of CERCLA Section 121(b): (1) protection of human health and the environment; (2) compliance with applicable or relevant and appropriate requirements (ARARs); (3) cost effectiveness; (4) use of permanent solutions and alternative treatment technologies to the maximum extent practicable; and (5) use of treatment as a principle component.

3.2 DETAILED DESCRIPTION OF THE ROD-SELECTED REMEDY

The selected remedy consists of extracting COC-contaminated groundwater and treating it aboveground. In situ chemical treatment—reductive dechlorination and/or chemical oxidation—would be used to expedite and enhance treatment, and to reduce the volume of extracted water. The various components of the selected remedy, as described in the Cooper Drum ROD, are:

- Extract groundwater contaminated with VOCs and treat it using liquid-phase activated carbon in vessels at an on-site treatment system. Containment will be provided at the downgradient extent of contamination.
- The treated water will be reinjected into the contaminated groundwater aquifer or discharged to the public sewer system operated by the Los Angeles County Sanitation District (LACSD). Reinjection will reduce the intrusion of and the potential for mixing with other off-site VOC plumes.
- Use in situ chemical treatment, either reductive dechlorination or chemical oxidation, to enhance remediation of VOC-contaminated groundwater. During the remedial design phase, conduct treatability studies to evaluate both methods and determine which works best under site conditions. Data obtained from pilot studies will also be used to determine the specific number and placement of in situ injection points.
- Conduct additional groundwater sampling during the RD phase to further define the downgradient extent of the VOC contamination.
- Continue groundwater monitoring for a period of three years after the monitoring demonstrates that remediation goals have been met.

The ROD also stated the time to reach remedial action goals as 20 years. However, it was noted that the actual time required for active cleanup could be reduced if the in situ chemical treatment was proven effective. Depending on the effectiveness of in situ chemical treatment, monitoring could be the only action needed at Cooper Drum within 5 to 10 years of start of remediation.

3.3 RATIONALE FOR THE SELECTED REMEDY

The principal factors considered in choosing the selected remedy for groundwater are:

1. There is no source material or non-aqueous phase liquids (NAPLs) in the groundwater constituting a principal threat;
2. Low level extraction provides an effective means of minimizing migration of the leading edge of the contaminant plume, without further commingling of on- and off-site plumes;
3. Reinjection of a portion of the treated ground water will enhance recovery of contaminants from the aquifer and will reduce the plume commingling potential;
4. Supplemental in situ chemical treatment may expedite cleanup and reduce volume and toxicity of contaminants in place; and
5. Depending on the success of the in situ chemical treatment, monitoring may become the only action needed at Cooper Drum within 5 to 10 years if it can be demonstrated that contaminant concentrations in the groundwater plume have stabilized at reduced concentrations.

3.4 COMPLIANCE WITH APPLICABLE OR RELEVANT AND APPROPRIATE REQUIREMENTS (ARARS)

Remedial actions selected under CERCLA must comply with ARARs under federal environmental laws or under State environmental or facility-siting laws when those are more stringent than the federal requirements. The ARARs and to-be-considered (TBC) criteria identified in the ROD for the groundwater remedy are included in Appendix C.

If after implementation of the remedy, hazardous waste still remains at the property at levels which are not suitable for unrestricted use of the land, additional institutional controls may be required in the form of a State Land Use Covenant with the property owner. The Covenant shall conform with the requirements of pursuant to Civil Code section 1471, Health and Safety Code section 25355.5 and the California Code of Regulations, Title 22, section 67391.1. However, remediation of groundwater will be required to meet all applicable cleanup goals. Therefore, institutional controls will not be needed for OU1 groundwater.

4.0 DETAILED DESIGN FOR GROUNDWATER REMEDIATION

The following section details the basis for the groundwater remedial design for contaminated groundwater. The design closely follows the ROD selected remedy for groundwater, as delineated in Section 3.0. However, the role of chemical oxidation, both as ex situ and in situ treatment, has been augmented to address the presence of 1,4-dioxane in groundwater.

4.1 STRATEGY FOR FULL-SCALE SYSTEM DESIGN

The lessons-learned from the ISCO and reductive dechlorination pilot studies (Section 2.7) provided a road map for full-scale application of these technologies at the Site. After the system operating parameters were optimized, the ozone/peroxide pilot-scale system was successful in achieving the test objectives of evaluating system performance and reducing COC concentrations without significant rebound. The reductive dechlorination (using HRC) pilot test also was successful in reducing VOC concentrations (but not 1,4-dioxane) in the pilot test area. Based on these observations, the following design strategy was developed for the full-scale groundwater remedial system:

- The in situ oxidation system will include the capability to inject both ozone and hydrogen peroxide. However, operation of the system could begin with injection of ozone only and transition to combined injection of hydrogen peroxide and ozone at less than stoichiometric mole to mole ratio of peroxide to ozone.
- It is possible, though not practical or cost-effective, to attain MCLs for all Site COCs across the entire groundwater plume using ISCO alone. However, it is both practical and cost-effective to use ISCO in the limited confines of the source area plume. As COC concentrations approach MCLs, the oxidation reaction kinetics is expected to be slower than that observed in the pilot study. Therefore, the ISCO system is designed to address COC concentrations greater than 50 µg/L. The portions of the plume less than the design concentration but greater than MCLs will be addressed with groundwater extraction and upgradient injection (in the source area), as well as the downgradient containment and treatment system (as per the ROD).
- Consistent with the ROD selected remedy, the downgradient containment and treatment system will include the following components: (1) enhanced reductive dechlorination with an injected carbon substrate, in the form of a permeable bioremediation barrier, to reduce VOC concentrations and shorten the time to reach cleanup goals; (2) groundwater extraction wells at the leading edge of the 5 ppb combined contaminant plume and downgradient of the bioremediation barrier, to contain the plume with residual VOCs and 1,4-dioxane at levels exceeding cleanup goals; (3) aboveground treatment, as needed, of the extracted groundwater; and (4) discharge of the treated water to the sanitary sewer under an LACSD permit.

4.2 OU1 REMEDIAL DESIGN

4.2.1 Source Area Strategy

The primary remedial alternative designed to reduce COC concentrations to cleanup levels is the use of ISCO, in conjunction with groundwater extraction, treatment and re-injection. Ozone will be used as the primary oxidant during the ISCO activities. Hydrogen peroxide may also be used as a co-oxidant depending on Site conditions and the results of the ozone-only injection. The remediation equipment will be capable of injecting both the oxidants.

Oxidant injection wells will be installed in the source area (which for design purposes is represented by the composite 100 ppb concentration contour of TCE; cis-1,2-DCE; and 1,4-dioxane), forming a permeable V-shaped barrier to the groundwater. The ozone and hydrogen peroxide will be supplied via a commercially available in situ chemical oxidation system. Additional components of the OU1 source area strategy will include the following.

- Extraction of groundwater downgradient of the ISCO barrier.
- Aboveground treatment and injection of this extracted groundwater upgradient of the ISCO barrier.

As indicated in the flow modeling results on Figure 4-1, the extraction well, installed downgradient of the ISCO barrier, will provide hydraulic control in the source area and maximize groundwater flow through the permeable barrier. Additionally, use of groundwater extraction followed by injection upgradient may also help in shortening of the cleanup time as per flow modeling results (Appendix F).

4.2.2 Remedial Design for Source Area Groundwater

The design details the ozone/ hydrogen peroxide (henceforth referred to as peroxone) well, extraction well, and injection well locations and also the depth of the screen intervals in each case. Three existing peroxone injection wells, M_{ox}-1, M_{ox}-2, and M_{ox}-3, were installed on Site for the pilot study evaluation and will also be utilized as part of the design. The existing peroxone injection wells were installed 35 feet to 50 feet apart from one another for maximum overlap of individual well radii of influence (ROIs).

Twelve new peroxone wells, denoted P_{ox}-1 through P_{ox}-12, will be installed in the source area, to approximately 70 to 95 feet bgs. The oxidant injection depths will be 10 feet below the target groundwater contamination; however, the actual screen depth interval will depend on location-specific lithology. Consistent with the maximum injection well spacing during the ISCO pilot test, the ROI of the peroxone injection wells is conservatively estimated to be around 25 feet. Based on this estimate, the new peroxone wells will be placed approximately 50 feet from each other, depending on actual Site conditions. The peroxone injection wells will be installed in a “double V” or triangular-shaped pattern intersecting the groundwater flow direction and will mainly target the northern portion of the source contamination area close to the former HWA (with 100 ppb or greater levels of COC contamination). The OU1 Source Area Design is shown on Sheet C-1 of the design drawings, included as a separate tab to Volume I of this report.

ISCO system operation is anticipated to continue for three years, after which the capture and treatment of the residual COCs in groundwater will be addressed by the extraction/treatment system. The ISCO remediation

equipment will be housed in a closed warehouse located along Rayo Avenue, adjacent to the treatment compound (Figure 4-2).

The total depth of the source area extraction well will be approximately 105 feet bgs. The well will be screened from 60 to 100 feet bgs. In addition, there will be a 5-foot deep sump bringing the total depth to 105 feet bgs. The placement of the extraction well will be geared toward capture of the 10 µg/L isoconcentration contour for 1,4-dioxane and any portions of the source area plume that lie beyond the ISCO system area of influence (Figure 4-1). The design flow rate of the extraction well will be 25 gpm, which based on the modeling results will capture most of the 10 µg/L 1,4-dioxane plume without commingling of off-site plumes.

The total depth of each of the two injection wells will be 85 feet bgs. The injection wells (located upgradient of the ISCO barrier, as shown on Figures 4-1 and 4-2) will be screened from 55 to 85 feet bgs. MODFLOW simulations supported the notion that injection would reduce the time to reach cleanup goals by increasing the groundwater flow rates in the treatment area. This is particularly valid in situations where thick sandy layers dominate the aquifer lithology, although the same may not be true in areas where tighter lithologies are present. The subsurface lithology at the Site is dominated by sandy layers that gradually thicken downgradient of the source area. Hence, injection upgradient of source area is expected to be successful in expediting the remediation of COCs. Based on modeling results, the two injection wells will be able to handle 30 gpm: 25 gpm from the source area extraction wells, and 5 gpm from the dewatering of the perched aquifer (as part of the OU2 soil RA).

The injection and extraction well trenching details and well construction details can be found on Sheets C-3 and C-6, respectively, of the design drawings. The design calculations for the pressure losses and the groundwater conveyance pipe sizes are included as Appendix I, Volume II, of this report.

Extracted groundwater will be treated aboveground in a VOC and 1,4-dioxane advanced oxidation process unit that will also be used for cleanup of the perched aquifer groundwater as part of OU2 RA. A liquid-phase granular activated carbon (LGAC) unit also will be used as required, to further polish the treated water. The current design assumes that ISCO in the source area will cease after 3 years of operation. However, operation of the source area extraction well and the aboveground treatment of the extracted water could continue even after ISCO is stopped. The groundwater treatment compound plan is depicted on Sheet S-1 of the design drawings, which are presented under a separate tab in Volume I of this report.

4.2.3 Downgradient Containment and Treatment Strategy

The downgradient containment and treatment strategy includes extraction of groundwater at the leading edge of the impacted groundwater plume and the use of an in situ permeable bioremediation barrier to expedite remediation of a portion of the plume between the source area system and the downgradient containment and treatment system. The use of in situ bioremediation will enhance the ongoing reductive dechlorination of VOCs in groundwater.

The current design includes conveyance of the extracted groundwater back up to the groundwater treatment plant located on site, followed by treatment and discharge to the sanitary sewer location on site, under an LACSD waste discharge permit. However, a final determination as to whether the extracted water will require treatment cannot be made until groundwater extraction wells have been installed, tested, and sampled prior to implementation of the RA.

The groundwater flow modeling results on Figure 4-3 show that groundwater extraction along McCallum Avenue could be designed to minimize the impact of adjacent plumes, while also providing hydraulic control of the groundwater through the permeable bioremediation barrier. The combined effect would be to further enhance/accelerate the treatment of Site groundwater and to reduce the time until cleanup goals are reached. Installation of a permeable bioremediation barrier along Southern Avenue would reduce the targeted treatment area for pump and treat to the area between Southern and McCallum Avenues. As mid-plume COC concentrations are biodegraded along Southern Avenue, the results of the HRC pilot test and analytical pore volume modeling indicate that the required operation time of the extraction wells could be significantly reduced. The downgradient strategy is depicted on Figure 4-3 and on design drawings.

4.2.4 Remedial Design for Downgradient Containment and Treatment of Groundwater

To provide plume containment, the RA will include the installation of two groundwater extraction wells at the leading edge of the 5 µg/L plume downgradient of the source area near McCallum Avenue. Results from a recent CPT/HydroPunch investigation (Section 2.4) indicate that the leading edge of the groundwater plume may be slightly south of McCallum Avenue (Figure 2-2). The downgradient extraction wells will be installed to a total depth of about 115 feet bgs. The wells will be screened from approximately 65 to 112 feet bgs. Each well will pump groundwater at a flow rate of approximately 20 gpm. (For typical extraction well design, see Sheet C-6.)

In addition to groundwater extraction, a 350-foot long barrier of an injected reductive dechlorination enhancing substrate will be placed along Southern Avenue (see Sheet C-2 of the design drawings). The substrate will be injected via borings drilled down to approximately 100 feet bgs. The substrate injection depth interval will be from approximately 80 to 100 feet bgs. Groundwater extraction along McCallum will be designed to minimize the impact of adjacent plumes, while also providing hydraulic control of the groundwater through the permeable bioremediation barrier. The combined effect will be to further enhance/accelerate Site groundwater treatment and to reduce the time until cleanup goals are reached. With the addition of the permeable bioremediation barrier, results of the previous HRC pilot test and analytical pore volume modeling indicate that the required operation time of the extraction wells could be significantly reduced, possibly from upwards of 35 years down to 20 years or less. Groundwater monitoring results from wells along Southern Avenue have shown the presence of TCE biodegradation daughter products (cis-1,2-DCE and VC), and negative ORP levels, suggesting that aquifer conditions in the downgradient area are conducive to reductive dechlorination.

In the current design, extracted groundwater is conveyed back up to the groundwater treatment plant located on site (see Sheet C-2 for more detail). Since the groundwater extracted in the downgradient area will flow through a reductive dechlorination bioremediation barrier, it is anticipated that residual 1,4-dioxane concentrations persisting in the groundwater may not be treated effectively by the bioremediation barrier (as shown in the HRC field scale pilot study). In order to attenuate the 1,4-dioxane levels to below cleanup levels, if needed, the advanced oxidation groundwater treatment unit will be used to also treat the groundwater extracted from the leading edge of the Cooper Drum plume. Use of this unit is expected to ensure compliance of all Site VOCs and SVOCs with discharge levels. Additionally, the LGAC vessels will be used to treat any residual/trace VOCs. However, a final determination as to whether treatment of this water will be required cannot be made until results are available from additional samples to be collected during implementation of the RA.

The source area injection wells have adequate capacity to handle the 30 gpm extracted from the perched aquifer and from the source area plume but they cannot handle the additional water (approximately 40 gpm) extracted from the leading edge of the plume. Therefore, extracted and treated water in excess of 30 gpm will be discharged to the sanitary sewer discharge point located on site, under an LACSD waste discharge permit.

A detailed inventory of all the equipment necessary for the groundwater design and the costs involved are included as part of the engineering costs summary, which are provided under a separate tab in this volume (Volume I) of the report. Design drawings also are provided in this volume of the report.

4.2.5 Groundwater Extraction Well Placement and Zone of Capture

One groundwater extraction well will be installed downgradient of the source area (east side of Rayo Avenue near MW-15) to address parts of the groundwater plume where contaminant concentrations are less than the ISCO design concentration, but greater than cleanup levels.

Placement of the downgradient extraction wells, as determined based on flow modeling results and existing Site geology, will be along McCallum Avenue, downgradient of the permeable bioremediation barrier. The complete modeling results are documented in the *OU1 Groundwater Remedy Conceptual Design* (URS, 2007d). A description of the groundwater model and sample modeling results are also included as Appendix F, Volume II, of this report.

Extracted groundwater will be treated in the above-ground treatment system located on site (which will also treat extracted perched groundwater as detailed in the soil RA) prior to being discharged. Discharge of water will be either via injection into two injection wells to be installed upgradient of the source area, or via the sanitary sewer discharge point located on site.

4.2.6 ISCO Radius of Influence

During the ISCO pilot study, the ROI of each oxidant injection well was conservatively assumed to be in the range 10 to 25 feet. The distance between the monitoring wells and the injection locations was therefore, varied (i.e., 10, 15, 20, and 30 feet) in order to evaluate the ROI of the injection wells.

DO and ORP measurements collected during the pilot study using downhole and flow-through cell devices confirmed that the injection well ROI was at least 30 feet (i.e., the largest distance between an injection well and a monitoring well). Additionally, a greater ROI was recorded in the upper injection interval in the shallow aquifer (approximately 50 to 80 feet bgs). This is probably due to the presence of less permeable aquifer material in the 40- to 50-foot bgs interval. Therefore, the maximum spacing between injection wells will be 50 feet (corresponding to a minimum ROI of 25 feet).

4.2.7 ISCO Injection Depth

During the ISCO pilot study, DO and ORP measurements were collected at 5-foot intervals in the wells. Given the short screen intervals in MW-20B (10 feet) and MW-33B (10 feet), the measurements did not reflect a significant change in DO or ORP as a function of depth in these monitor wells. However, the shallow wells (MW-20 and MW-33A) did show increased levels of ORP and DO in the 50- to 55-foot depth interval versus the 60- to 65-foot depth interval in which the oxidants were injected. This was expected based on the pressure buildup in MW-20 and MW-33A, which was caused by the presence of the semi-confining layer just above 50 feet bgs.

Significant information was collected from EW-1, which has a 40-foot screen interval. For three of the five profiling events conducted during the focused injection, a significant increase in ORP (up to 230 millivolts [mV]) and DO (up to 5.2 milligrams per liter [mg/L]) was measured at the 80-foot depth interval (as compared to the deeper interval down to 85 feet bgs), suggesting the vertical offset of the influence of the deeper ISCO injection at 85 feet bgs was 10 feet or less at this location.

Therefore, the results of vertical profiling indicate that, for optimal results, the injection interval should be a maximum of 10 feet below the remediation target area. This is likely due to the cone-like diffusion pattern of the injected ozone/ hydrogen peroxide and air.

4.2.8 Ozone/Hydrogen Peroxide Injection Well Details

The peroxone injection wells will be installed in 10-inch diameter soil borings. The wells will be installed with the following components: two hydrogen peroxide and two ozone injection risers, each completed with 0.02-inch, V-slotted, 1 to 3-foot length screens, within 0.5-inch outer diameter (OD) stainless steel tubing, and check valves to prevent backpressure into the injection lines. The ozone and hydrogen peroxide risers and screens for each depth range will be provided in a pre-fabricated assembly. The deeper injection assembly will be installed with the ozone screen down to approximately 95 feet bgs, 5 feet above the bottom of the injection well boring. (Screen placement will depend on location-specific lithology and actual screen intervals may vary from those specified in this report. The final screen intervals are likely to be determined by the field geologist during installation.) A Monterey No. 3 sand filter pack will be placed surrounding the screen to 1.5 feet above the top of the screen. A 2-foot bentonite seal will then be placed above the sand pack surrounding the 1-foot-long ozone screen, to prevent short-circuiting. The 3-foot-long hydrogen peroxide screen will be positioned above the bentonite seal section. Sand pack will then placed surrounding the hydrogen peroxide screen and to a depth of 2 feet above the top of the screen. The borehole will then be sealed with bentonite up to 78 feet bgs, where another injection unit (the shallow injection assembly) will be placed in the borehole and installed as described for the deeper unit. Following installation of the prefabricated assembly and tubing, each borehole will be filled to the top with grout or bentonite and then completed with a protective, lockable access vault.

Following the injection well installations, trenching will be performed, and the conveyance piping/tubing will be installed from the well vaults to the ISCO trailers. Tubing will be used for delivery of ozone and hydrogen peroxide as per manufacturer recommendations. Teflon tubing contained in an outer polyethylene sleeve is commonly used to convey ozone. Polyvinyl chloride (PVC) tubing is used to convey hydrogen peroxide. All tubing from the injection wells to the ISCO trailers will be bundled and contained in 4-inch Schedule 40 PVC piping.

4.2.9 In Situ Ozone and Hydrogen Peroxide Injection

The benefits of ISCO are two fold: apart from destruction of the COCs that come into contact with the injected oxidants, ISCO processes also increase DO levels in the aquifer and have been shown to stimulate in situ biological activity. In some cases, ISCO has been used to oxidize arsenic, which has been detected in the Site vadose zone during past sampling events. Arsenic is less soluble at its highest oxidation state. Thus, use of ISCO may be beneficial in addressing any existing arsenic contamination at the Site.

The ozone/hydrogen peroxide delivery equipment will be provided by a commercial vendor. It will consist of a trailer-mounted chemical oxidation system, which will direct appropriate flow rates of ozone and hydrogen

peroxide into peroxone wells fitted with pre-fabricated injection assemblies, as described above. The system is expected to remediate both adsorbed and dissolved-phase organic compounds.

The trailer system will be set up to inject individual or variable combinations of air, oxygen, ozone, and hydrogen peroxide into the saturated zone. ISCO system specifications are determined based on the pilot-scale study results. Each trailer-mounted ozone system will have the capability to deliver up to 130 pounds per day of up to 95% oxygen, which will be sufficient for the ozone generator to produce up to 15 pounds per day of ozone. The system will be designed for ozone injection rates of 2 pounds per day per injection well (or 1 pound per day per injection interval). This rate, when implemented during the last six weeks of the pilot test, showed the highest rate of COC destruction. It is not known whether higher oxidant injection rates would be beneficial; therefore, the design will allow for modification of the ozone injection rate, pending observed system performance.

At the estimated design rate of 2 pounds per day of ozone per injection well, for 15 injection wells, two such systems would be required to provide adequate ozone. A standard chemical feed pump will deliver the hydrogen peroxide from a tank storing approximately 150 gallons of up to 35% strength hydrogen peroxide. An air compressor with a port gas delivery manifold will provide up to 18 scfm of compressed air at 120 pounds per square inch (psi). The trailer-mounted ISCO delivery system will include a 24-port gas/ chemical delivery manifold with 0.25-inch stainless steel solenoid valves for pulsing oxygen, air, ozone, and/or hydrogen peroxide into the injection wells. The injection process will be controlled through an integrated programmable logic controller (PLC) system that controls valve sequencing and activates all audio/visual alarms. A call-out modem will be included for reporting the system operational status.

4.2.10 Downgradient Containment and Treatment System

The presence of a permeable bioremediation barrier in the downgradient area is expected to reduce the required operation time of the downgradient extraction wells (DEW-1 and DEW-2) by as much as 15 years, according to analytical pore modeling results. The VOC concentrations are expected to meet the action levels. Since 1,4-dioxane is not degraded by the bioremediation barrier (as demonstrated in the HRC field-scale study), the current plan is to use an ex situ groundwater treatment unit, employing advanced oxidative treatment, to treat the 1,4-dioxane and residual VOCs, if needed.. However, a final determination as to whether pretreatment of the extracted water prior to discharge will be necessary can only be made when the two groundwater extraction wells (DEW-1 and DEW-2) and the proposed new monitor well are installed and sampled as part of the RA implementation.

To summarize, the current downgradient system design consists of two downgradient extraction wells near McCallum Avenue, the 350-foot permeable bioremediation barrier along Southern Avenue, and the piping from the extraction wells up to the location of the source area extraction well, where the piping will be plumbed into the pipeline that then continues from the source area extraction well to the on-site treatment compound (see Sheets C-1 and C-2 for detail).

4.2.11 Manifold and Piping Design

The manifold and piping design for the groundwater remedy account for these unique systems: a groundwater extraction and two groundwater injection wells located in the source area, two groundwater extraction wells located in the downgradient edge of the groundwater plume, an in situ ozone and hydrogen peroxide injection

system, and an ex situ advanced oxidation and GAC system. Each of these systems require special considerations for manifold design, piping material, and conveyance layout.

Both the source area and downgradient groundwater extraction/injection systems will have flow control valves, check valves, flow meters, and a tee which will allow for sampling and flow pressure measurements inside the well vault. The downgradient wells will tie-in underground and flow back towards the treatment system. As the conveyance line flows near the source area extraction system, the flows will combine and be directed back to the ex situ advanced oxidation system in one pipe. As the flow from each well is individually connected, no aboveground manifold will be required. The piping material for these groundwater extraction systems will be high density polyethylene (HDPE). This material is much stronger than PVC, has less friction losses because of fewer fittings required for installation, and can be installed much quicker than a PVC pipeline. The piping diameters will be a minimum of 2 inches and will match the inlet and outlet diameter of the treatment system to avoid any unnecessary contractions which would require a larger pump to overcome the resulting friction losses.

The extracted groundwater will pass through an ex situ treatment system for treatment consisting of an advanced oxidation system and two LGAC vessels. The advanced oxidation system is a self-contained system utilizing hydrogen peroxide and ozone to destroy contaminants. Any manifolds and piping for this system will be provided as an integral piece of the system. However, all equipment downstream of the unit will need to be compatible with ozone and hydrogen peroxide for any residual hydrogen peroxide or ozone not consumed in the advanced oxidation system reactor. Teflon inner tubing contained within a polyethylene sleeve, or other manufacturer-approved material, would be appropriate for ozone conveyance. Chlorinated PVC (CPVC), PVC, or other manufacturer-approved material, would be appropriate for hydrogen peroxide conveyance. The LGAC vessels will not require any manifold other than valves to isolate the vessels for operation and maintenance (O&M) activities. The LGAC vessels will be placed in series and will be connected by hoses to allow for simple O&M, switching of vessels from lead to lag following changeouts of spent carbon, and sample ports to monitor breakthrough at each vessel.

The in situ hydrogen peroxide and ozone system manifold is provided by the manufacturer as part of the complete system. The manifold will be fairly complex, consisting of solenoids or actuated valves controlled by a PLC rotating injection points at pre-set time intervals. The manifold will be located inside the treatment system, typically a panel or trailer. The manifold equipment will comprise of materials compatible with hydrogen peroxide and/or ozone. A PVC conduit will typically be required for these tubing materials for underground installation, as they cannot be direct-buried. The tubing is typically Teflon contained within a polyethylene outer sleeve for ozone, PVC for hydrogen peroxide, and/or other manufacturer-approved materials. The outer sleeves or conduits would be approximately ½-inch to 1-inch in diameter. The riser pipes inside the ozone/peroxide injection wells are typically made of ½-inch stainless steel tubing. All piping sizes and materials will require manufacturer approval.

4.3 PERFORMANCE SAMPLING ASSUMPTIONS

Sampling is required to monitor the performance of the source area treatment system. The following assumptions are made regarding treatment system performance and compliance monitoring.

4.3.1 Performance and Compliance Monitoring

System and well samples will be required during the system startup and routine operation to ensure proper operation of the remediation equipment and to evaluate if cleanup goals have been reached. A detailed summary of a typical sampling schedule is tabulated in Tables 4-1 and 4-2, respectively, for performance monitoring of the well network and the treatment system itself.

The frequency and parameters suggested in Table 4-1 are typical for ISCO/bioremediation/groundwater treatment systems. This table also lists the monitor wells that are likely to require monitoring during the various stages of the RA.

Initially all groundwater monitoring wells will be sampled quarterly. As concentrations decline, the sampling frequency is expected to decline as follows:

- Quarterly – groundwater concentrations greater than cleanup goals;
- Semiannual – groundwater concentrations less than cleanup goals during the previous sample event;
- Annual – groundwater concentrations less than cleanup goals for two consecutive sample events; and
- Confirmation sampling if groundwater concentrations remain less than cleanup goals for three consecutive sample events.

If concentrations increase above cleanup goals at any time, the well shall resume the quarterly sampling frequency and follow the process listed above.

Table 4-2 lists the frequency of monitoring for the groundwater treatment system and extraction and injection wells. As shown in this table, more frequent sampling is expected during the first 4 weeks of operation.

The substantive requirements of the WDR permits and LACSD permit (for downgradient discharge) will determine the actual sampling frequencies, parameters, and analytical methods.

4.3.2 Post-Remediation Confirmation Compliance Monitoring

The RD assumes that the source area ISCO system will operate for approximately 3 years. However, this system may be turned off earlier if RA targets are met ahead of schedule. This shutdown will allow for any potential rebound to occur. During this time, quarterly well sampling events for a period of up to 1 year will confirm if concentrations have rebounded to levels above the RA goals. The confirmation sampling will include at least one sample from the source area extraction well and all monitoring wells within the in situ oxidation area. If results show evidence of rebound, a decision will have to be made to restart oxidation, or to allow the aboveground treatment system to treat the residual source area contamination. If concentrations are still below cleanup levels, the source area treatment system will be recommended for shut down.

Once contaminant concentrations across the Site plume have reached target cleanup levels, the groundwater treatment system will be turned off. This shutdown will allow for any potential rebound in the Gaspur Aquifer to occur. During this time, well sampling events, as listed in Table 4-1, will be conducted for up to 3 years, to confirm whether the site is clean or concentrations have rebounded to levels above the cleanup goals. If

results show evidence of rebound the system will be restarted. If concentrations remain below target cleanup levels, the Site will be recommended for closure sampling which would include sampling of every monitor and extraction well.

4.4 TREATMENT SYSTEMS MONITORING

The ISCO and aboveground treatment systems will typically include the following components to promote safe and efficient remediation operations. Actual instrumentation will vary depending on the specific vendor supplying a given system.

- Source Area ISCO System:
  - *Oxygen and Ozone Pressure Gauges* on each vapor inflow line and on the manifold headers.
  - *Ozone Pressure Regulator, Ozone Injector Pressure Gauge, Oxygen Flow Switch, and Lower Explosive Limit (LEL) meter*. Ozone and oxygen pressure monitoring is required to regulate the amount of oxygen (and subsequently ozone) being delivered to the 15 online wells.
  - *Flow Rates* monitored via *flow meters* on each line. If the flow rates fall outside of the operating limits, headers may be blocked or plugged.
  - *Temperature Switches* and *Temperature Gauges* to monitor for safe operation. When temperatures exceed the high-temperature set point, a system shutdown will be triggered.
  - *Pressure Switches* on the inlet and outlet side of the ozone compressor. If pressures fall outside of the operating limits, the structural integrity of the pipe/equipment may be exceeded, triggering a system shutdown.
  - *An Hour Meter* to document system performance. It also will communicate to the controller so that the system can be monitored remotely to verify operation.
  - *Tank Float Switches* in the hydrogen peroxide holding tank and the influent groundwater holding tank to monitor for liquid level. These switches monitor the low level, high level, and high/high level in the tanks. These level controls are used with the controller to call for more flow or to stop the flow from the holding tank.

- Aboveground Groundwater Treatment System:
  - *Advanced Oxidation System*
    - *Ozone Pressure Gauges and Check Valves, Automatic Pressure Control and Shutoff Valve* located on the rack-mounted, solid-state ozone generator and ozone manifold of the Oxygen Generation/Distribution System.
    - *Oxygen Flow Controller, which* is required to regulate the amount of oxygen being delivered to the Advanced Oxidation System.
    - *Tank Float Switches* in the hydrogen peroxide holding tank and ozone holding tank to monitor for liquid level. These switches monitor the low level, high level, and high/high level in the tanks. These level controls are used with the controller to call for more flow or to stop the flow from the holding tank.
    - *Inlet Flow Meter* to monitor flow through the advanced oxidation system.
  - *LGAC Unit*

- *Pressure Switches* on the inlet, middle, and outlet groundwater conveyance line of the LGAC Vessels. If pressures fall outside of the operating limits, there may be a blockage in the groundwater line, triggering a system shutdown.

– *Flow Metes* on the effluent/groundwater re-injection line. If the flow rates fall below the operating limits, may cause cavitation and ruin the groundwater injection pumps, and if above operating limits, water may begin to back-flow, causing a system shutdown.

– *Flow Meter/Totalizer* at the discharge location to monitor the total volume of groundwater discharged.

Controls associated with the treatment systems are typically installed on the system by the manufacturer as part of a typical controls package. A review of the manufacturer's controls will be conducted to ensure all parameters can be controlled such that the system will operate safely and continuously.

4.5 INSTRUMENTATION

The following instrumentation and process components are typical of what will be available on the groundwater remediation system:

- Source Area ISCO System
  - Pressure gauges for each oxidant injection well on the manifold
  - Ozone/peroxide compressor motor thermal overload switch
  - Pressure and temperature monitors on all oxidant injection well lines
- Advanced Oxidation System
  - Pressure gauges for ozone generation/distribution system on the manifold, and oxygen system
  - Ozone detector and destruct unit
- Groundwater Treatment Compound
  - High- and low-temperature shutoff at the treatment system
  - Flow meters on all liquid conveyance lines
  - Pressure Indicators on groundwater lines before the first LGAC vessel, in between both LGAC vessels, and after the second LGAC Vessel
  - Water flow totalizer and system run clocks
  - Localized control panels and central control panel for the submersible groundwater pumps

The remediation system operators also will have other portable monitoring equipment and tools for proper remote system adjustment and operation.

4.6 ELECTRICAL CONTROLS

Electrical equipment will be designed and selected in accordance with the classification of the various areas of the remediation system. In accordance with the National Electrical Code (NEC), and considering the mixture of vapors the system will handle at the Site, the system is assumed to require Class 1, Division 1, electrical components, especially given that the system will be monitored and managed by operating personnel intermittently (after the initial startup). Class 1, Division 1-specified components are designed to operate in atmospheres with potentially explosive or flammable vapors.

System motors will be specified to be totally enclosed, fan-cooled (TEFC), as well as explosion-proof. The motors also will be rated "T," as defined by the NEC, and comply with the National Fire Protection Association (NFPA) 497M (or latest equivalent) to produce lower temperatures on the external housing, to comply with the Class 1, Division 1, criteria. Other electrical components will be specified to operate under outdoor weather conditions for this area. The electrical panel will include all overcurrent protection devices and motor starters as shown on the electrical design drawings (Sheets E-1, E-2, and E-3 of the design drawing package, which is included as a separate attachment to this report). There will be an emergency shut-off switch inside the compound and a system shut-off button on the supervisory control and data acquisition (SCADA) system. The remediation system will be lighted at night for security and safety.

The SCADA system is the central part of the control and automatic data collection systems. It consists of software systems and algorithms used to provide instructions to the plant automation equipment, such as PLC. The SCADA system will be specifically configured to communicate with each well control panel PLC and the main control panel PLC to provide direct control of the data collection system.

4.7 PROCESS SAFETY CHECKLIST

In addition to the mechanical controls mentioned above, which provide safe operation, the system design requires that the remediation system include the following key process safety features. Additional general O&M guidelines are provided as Appendix H of this report.

- O&M manual(s) for pertinent equipment;
- A clearly marked emergency shut-off switch in the treatment compound area;
- Security fencing and lighting;
- NFPA warning signs and placards on the security fence;
- Emergency contact names and phone numbers on the security fence;
- Spill prevention and containment cabinet;
- First aid kit;
- Clearly marked directional flow arrows on the process piping;
- Fire extinguisher; and
- Other safety components, as required.

A process safety review will be accomplished as an expanded component of the quality assurance (QA) review.

The deliverable product resulting from this effort will be a checklist that demonstrates compliance with ARARs and pertinent codes and standards for the project remediation system. This checklist will be a living document that follows the development of the design to the "final" stage and into system installation. It is currently anticipated that approximately one page of text may be incorporated into the process flow diagram (PFD) to record the revision number, date, and initials of the reviewing engineer.

4.8 DESIGN ASSUMPTIONS FOR GROUNDWATER TREATMENT

All design assumptions for the groundwater RA are shown in Table 4-3.

The overall treatment process, as described in the preceding sections, is a combination of in situ ozone and hydrogen peroxide injection with groundwater extraction/injection in the source area, and in situ bioremediation combined with groundwater plume containment and treatment in the downgradient area. For ease of access, the treatment compound will be located on-site (see Sheet C-1). The same treatment compound will be used to treat groundwater from the perched and Gaspur Aquifers. This compound also will hold the equipment for the soil RA (see Sheets P-2 and S-1 for detailed drawings). The treatment compound will be capable of injecting 30 gallons per minute (gpm) of treated groundwater through the injection wells. It will also be capable of discharging an additional 40 gpm to the sanitary sewer location on site. The total extracted water, estimated at 70 gpm, will comprise of the following: 5 gpm from the perched aquifer via the soil RA, 25 gpm from the source area extraction well, and 40 gpm from the two downgradient extraction well.

4.8.1 Media, Byproducts, and Process Rates

The ISCO in the source area will not produce byproducts. Because of the use of in situ technology, the extracted groundwater is anticipated to have relatively low COC concentrations. The extracted groundwater will be plumbed to the on-site treatment compound and will be treated aboveground via a commercially available advanced oxidation unit and a LGAC unit. The byproducts from the groundwater treatment system will be treated water that meets the discharge requirements and spent liquid-phase granular activated carbon.

The design flow rate of groundwater extracted downgradient of the ISCO barrier is 25 gpm. Another 5 gpm is expected from dewatering of the perched aquifer. The anticipated total flow rate from the downgradient containment system is estimated at 40 gpm. The extracted and treated water will be discharged via two pathways: approximately 30 gpm will be injected into the Gaspur Aquifer upgradient of the ISCO barrier, and the remaining water will be discharged to sanitary sewer under a LACSD permit.

4.8.2 Waste Stream Qualities

Local Sanitary Sewer District

Discharge to the LACSD sanitary sewer has a maximum design rate of 40 gpm. The quality discharge limits for LACSD parameters including flow rates, temperature, pH, total dissolved solids (TDS), select metals, and organics (i.e., VOCs and 1,4-dioxane) will be monitored and controlled carefully. The trench details for sewer discharge sampling box are shown on Sheet C-4 of the design drawings.

Liquid-Phase Granular Activated Carbon

LGAC will be selected, handled and disposed with the assistance of a pre-qualified carbon vendor. The plant operators will supervise the carbon changeouts. After the change-out, the carbon vendor will perform the actual carbon removal and regeneration for future use, or disposal to a licensed landfill.

4.8.3 Performance Standards

Performance standards focus on the following objectives:

- Operator and personnel safety
- Process efficiency and zero health and safety (H&S) or environmental health and safety (EH&S) incidents
- Cost-effectiveness

Remediation system design will incorporate mechanical and electrical safeguards. Operator training, safety consciousness, and experience will be required for safe operation. The remediation system will include design flexibility to maximize process efficiency. Operator training, along with engineering technical services, will be required to meet the second objective of process efficiency with zero H&S incidents. Accomplishing the first two objectives listed above, along with maximizing run time, will help achieve the third objective, cost-effectiveness.

4.8.4 Long-Term Performance Monitoring

The system operators, with the help of the supervising engineers, will monitor long-term system performance. Key parameters, such as contaminant levels, discharge limitations, and system efficiency, will be tracked and monitored. Remedial process optimization (RPO) reviews will be implemented as necessary.

4.8.5 Project Quality Checklist, Pertinent Codes, and Standards

The Project Quality Checklist includes a section on Process Safety, ARARs, Pertinent Codes, and Standards. This checklist is a living document that will follow the development of the design to the “final” stage and into installation. The checklist is currently anticipated to consist of approximately one page of text that may be incorporated into the PFD engineering drawing. It will also record the revision number, date, and reviewing engineer initials.

4.8.6 Other Technical Factors

As other technical factors become apparent regarding the remediation system design or O&M, this RDR will be revised and recorded, as appropriate. Revisions to the RDR and/or engineering drawings must be approved by EPA Region 9.

5.0 CONSTRUCTION AND IMPLEMENTATION

5.1 PLANS

The following plans must be provided before implementation of the RA

The Remedial Action Work Plan (RAWP) identifies construction and implementation issues to be carried out by the remedial action contractor. The RAWP will include a Site Health and Safety Plan (HASP), Sampling and Analysis Plant (SAP), and the Construction Quality Control Plan (CQCP).

A generalized CQCP has been included as Appendix G (Volume II) of the RDR. The RAWP, HASP, and SAP will be prepared by the remedial action contractor. The CQCP is intended to establish project organization and includes requirements for independent evaluation of the construction conformance with the design specifications.

A Construction Completion Report will be prepared by the construction contractor that includes discussion of field design changes, as-builts, quality control results, and health and safety documentation.

A generalized O&M manual for the groundwater treatment system has been included as Appendix H (Volume II) of this RDR, however a more specific O&M manual, which includes system and vendor-specific guidelines must be provided by the construction contractor. The O&M manual will be provided in conjunction with the RAWP. The O&M manual will include: (1) a description of the treatment system operation; (2) a description of potential operating problems and solutions; (3) specifications and maintenance schedules for all equipment.

5.2 DESIGN DRAWINGS

A full set of design drawings are included in this volume of the RDR (Volume I). These design drawings for the RA have been previously referenced in prior sections of this report. Additionally, a full-sized set of drawings are attached.

5.3 SPECIFICATIONS

Complete specifications for the remedial action are provided in Volume III of this RDR and are intended to accompany the Drawings package for use in the field during construction.

5.4 SCHEDULE

A RA schedule also is included in this volume of the RDR (Volume I). The schedule includes both the OU1 groundwater and OU2 soil RA. Because a start date for the RA has not been determined, the schedule is based on days to complete each task following start of construction activities.

5.5 COST ESTIMATE

An RA cost estimate has been prepared based on the RD presented herein and is provided under a separate tab in this volume of the RDR (Volume I). The total estimated capital cost for the groundwater RA is approximately $2,220,000. This estimate assumes that construction of the RA occurs in the first year (i.e., capital costs are not inflated or discounted). The total present worth O&M cost is estimated at $3,810,000. This estimate accounts for inflation, as well as a discount rate of 7%, over the 23-year duration of the project (assuming that only confirmation monitoring will occur during the last 3 years). Based on these estimates of the capital and the present worth O&M costs, the total cost for implementation of the groundwater RA is approximately $6,030,000 in 2007 dollars.

The cost estimate was prepared using prior experience and actual subcontractor bids. The cost estimate is expected to be within plus 15 percent and minus 5 percent.

5.6 CONTRACTOR QUALIFICATIONS

The contractor shall have three to five years experience with soil and groundwater remediation systems, and piping systems. The contractor will be responsible for the quality performance of the work specified and preparation of products and reports as required for completion of installation of systems. The contractor will also manage all solid wastes generated during construction and trenching of the site including sampling and disposal of wastes. The contractor will provide technical and administrative services, monitor, supervise, review work performed, coordinate budgeting and scheduling to assure that the project is completed within budget, on schedule, and in accordance with approved procedures and applicable laws and regulations. All employees or subcontractors performing work on this site will be 40-hour trained under CFR 1910.120 and CCR title 8-5192. The contractor shall be bonded and licensed in the state of California, providing references and descriptions of previous related work. The contractor will identify the potential physical and chemical hazards that may be encountered; and will specify health and safety control measures to be implemented throughout the course of the project.

5.7 COOPER DRUM PROPERTY SITE ACCESS

The area of the Cooper Drum property where remediation equipment will be installed must be vacated and secured during the RA. This will enable safety and prevent exposure to hazardous substances during installation and operation of the remedial systems.

5.8 OFF-SITE EASEMENT AND ACCESS.

Since the Cooper Drum Site is bordered between Coryal Street and Rayo Avenue, with downgradiant extraction wells located on McCallum Avenue and additional monitoring wells to be located between Southern Avenue and McCallum Avenue, it is expected that the contractor will gain required permits, easements, and rights of way to access lands or public areas. The contractor will need to prepare traffic plans, and schedule traffic controls prior to the start of work, taking in consideration delays and restrictions in the work schedule to accommodate possible delays due to weather, traffic, easement and access restrictions.

6.0 ENVIRONMENTAL AND PUBLIC IMPACT REDUCTION PLAN

The overall remediation system will be designed and constructed with the objective of reducing environmental and public impacts. As stated in Section 4.9.3, Performance Standards, system operation objectives will be to achieve the following parameters.

- Operator and personnel safety
- Process efficiency with zero H&S or EH&S incidents
- Cost-effectiveness

These objectives will ensure little or no impact on the environment and the public. In addition, the remediation system will include security, electrical grounding, visual impact reduction, security fencing, and spill containment. Details of these additional environmental and public impact reduction plans follow.

6.1 SECURITY AND FENCING

Security features on the system include automatic alarm settings on the process equipment and corresponding automatic notification to the responsible system operators. In addition, the system will include dusk-to-dawn lighting and automatic electrical shut-offs, in the event vandals tamper with the equipment and cause an auto-trip alarm.

The treatment compound for the aboveground groundwater treatment unit and the soil RA will include 8-foot chain-link fencing with lockable gates for entry and exit and security slats that will block the view of the process equipment to reduce public curiosity (see Sheet C-5 for fence details). Additionally, the entire compound will be surrounded by painted bollards to prevent accidents caused by on-site traffic (see Sheet S-1).

The ISCO trailers will be housed inside an on-Site warehouse along Rayo Avenue, south of the former HWA. Since most of the trailers will be housed indoors, it is unlikely that the system will cause any public safety concerns. Nevertheless, all safety protocols will be in place to minimize risk.

6.2 ELECTRICAL GROUNDING

The remediation system will be designed and installed with electrical grounding to minimize the potential for operator electrocution. Electrical grounding is also required because this system will process impacted groundwater. Noise abatement features will be included on the key pieces of process equipment.

6.3 VISUAL SCREENING

Security fencing will be installed with colored slats in the chain-link for visual screening. This type of fencing is very durable, secure, and suitable for this type of application. The screening should reduce complaints regarding visual concerns from local residents. Additionally, painted (yellow) bollards will surround the treatment compound.

6.4 SPILL CONTAINMENT

The remediation system will be constructed with spill containment features. The containment sump will include a sump pump and an alarm feature that will be tied into an automatic interlock for system shutdown.

7.0 REFERENCES

PRIMA Environmental, 2005. *ISCO Using Ozone and Hydrogen Peroxide – Bench-Scale Study*.

United States Environmental Protection Agency (EPA), 2002. *Record of Decision, Cooper Drum Company, City of Southgate, California*.

URS Group, Inc. (URS), 2002. *Cooper Drum Remedial Investigation Feasibility Study Report*.

URS, 2005. *Final Results of HRC Field Pilot Study*. April.

URS, 2006a. *Remedial Design Technical Memorandum for Field Sampling Results*. July.

URS, 2006b. *Field Pilot Study of ISCO Using Ozone and Hydrogen Peroxide*. December.

URS, 2007a. *Soil Remedial Design Report Operable Unit 2 Cooper Drum Superfund Site*. September.

URS, 2007b. *Remedial Design Technical Memorandum for Field Sampling Results, Addendum No. 2 CPT/HydroPunch Sampling Results February/March 2007*. June.

URS, 2007c. *Remedial Design Technical Memorandum for Field Sampling Results, Addendum No. 1 Groundwater Monitoring Report August 2006.* March.

URS, 2007d. *OU1 Groundwater Remedy Conceptual Design, Cooper Drum Company Site, South Gate, CA.* May.

TABLES

TABLE 2-1

Groundwater Contaminants of Concern and Cleanup Levels
Cooper Drum Company Superfund Site, South Gate, CA

Medium	Contaminant of Concern	Cleanup Level (µg/L)	Basis for Cleanup Level
Groundwater (VOCs)	1,1-Dichloroethane (1,1-DCA)	5	MCL[a]
	1,1-Dichloroethene (1,1-DCE)	6	MCL
	1,2-Dichloroethane (1,2-DCA)	0.5	MCL
	1,2-Dichloropropane (1,2-DCP)	5	MCL
	1,2,3-Trichloropropane (1,2,3-TCP)	1	PQL[b]
	Benzene	1.0	MCL
	cis-1,2-Dichloroethene (cis-1,2-DCE)	6	MCL
	trans-1,2-Dichloroethene (trans-1,2-DCE)	10	MCL
	Tetrachloroethene (PCE)	5	MCL
	Trichloroethene (TCE)	5	MCL
	Vinyl chloride	0.5	MCL
Groundwater (SVOC)	1,4-Dioxane	6.1	PRG[c,d]

[a] MCLs from Title 22 California Code of Regulation Section 64431 and 64444, unless otherwise specified.
[b] No MCL established for 1,2,3-trichloropropane. The PQL was identified as a remedial goal.
[c] No MCL established for 1,4-dioxane. The concentration is for the ingestion of drinking water only and does not account for potential dermal and inhalation exposure. EPA has established a screening criterion for PRGs.
[d] Cleanup action level will be reassessed and any revisions will be incorporated into the remedial action.

EPA = United States Environmental Protection Agency
MCL = California primary maximum contaminant level
PQL = practical quantification limit
PRG = EPA preliminary remediation goal for drinking water
SVOC = semivolatile organic compound
VOC = volatile organic compound
µg/L = micrograms per liter

TABLE 4-1

Monitor Well Sampling Summary
Sampling Summary for OU1 Groundwater Monitor Well Programs

Program	Number of Wells	Monitor Well Location	Sample Frequency
ISCO Waste Discharge Requirements Permit[a]	10 monitor wells[b]	MW-2, EW-1 (63' & 85') EW-2 (63'&78'), MW-20, MW-20B, MW-21, MW-33A, MW-33B, MW-39A, MW-39B	Baseline and monthly for 6 months, quarterly for remaining 2.5 years
Bioremediation Permeable Barrier Waste Discharge Requirements Permit[c]	10 monitor wells[d]	MW-24, MW-25, MW-25B, MW-27, MW-28, MW-29, MW-30, MW31, MW-31B, MW-38A	Quarterly for 5 years
Long Term Performance Monitoring[e]	24 monitor wells quarterly; 8 wells annually	24 quarterly wells-EW-1, EW-2, MW-10, MW-15, MW-17 MW-20, MW-20B, MW-21, MW-22, MW-23, MW-24, MW-27, MW-28, MW-29, MW-30, MW-31, MW-31B, MW-34A, MW-34B, MW35A, MW-35B, MW36A, MW-36B,MW-39A; 8 annual wells MW-2, MW-3, MW-16, MW-18, MW-19, MW-26, MW-32, MW-33A	Quarterly/Semiannually/ Annually (up to 23 years or less)[f]

[a] Per Los Angeles Regional Water Quality Control Board (LARWQCB) Wastewater Discharge Requirements (WDR) permit analyzed quarterly for VOCs, 1,4-dioxane, chloride, nitrate, sulfate, bromide, alkalinity, TSS, TDS, TOC, cations, hexavalent chromium, priority pollutant metals. VOCs and 1,4 dioxane only for more frequent than quarterly sampling. Cations include barium, boron, calcium, iron, magnesium, manganese, potassium, and sodium. Priority pollutant metals and hexavalent chromium will be analyzed during the initial sampling round and annually thereafter. All sampling events will include field parameters (ferrous iron, pH, DO, ORP, temperature, turbidity, and conductivity).

[b] After three years some wells EW-1, EW-2, MW-20, MW-20B, MW-21, MW-39A will continue to be sampled under long term performance monitoring.

[c] Per LARWQCB permit analyzed quarterly for VOCs; 1,4-dioxane; chloride; nitrate; sulfate; bromide; alkalinity; TDS; TOC; sulfide; ethane/ methane; CO_2; VFAs (volatile fatty acids, not required by WDR); and cations (include calcium, iron, magnesium, manganese, potassium, and sodium); plus field parameters (see No. 1 above).

[d] After five years it is anticipated that only six wells (to be determined) will continue to be sampled under long term performance monitoring.

[e] Wells will be analyzed quarterly for VOCs; semiannually for 1,4-dioxane. Analysis for MNA parameters will be performed during the annual sampling event, and will include alkalinity chloride, nitrate, sulfate, sulfide, ethene/ethane/methane, and field parameters (see No.1 above).

[f] Initially all groundwater monitoring wells will be sampled quarterly. As concentrations decline, the sampling frequency shall decline as follows:

- Quarterly – groundwater concentration greater than cleanup goals;
- Semiannual – groundwater concentrations less than cleanup goals during the previous sample event; or
- Annual – groundwater concentrations less than cleanup goal for two consecutive sample events.
- Stop sampling a well, until confirmation sampling, if groundwater concentrations less than cleanup goal for three consecutive sample events.
- If concentrations increase above cleanup goals at any time, the well shall resume the quarterly sampling frequency and follow the process listed above.

TABLE 4-2

Treatment System Sampling Summary
Sampling Summary for OU1 Groundwater Extraction and Treatment System Sampling

Program	Sample Location	Sample Frequency	
		Initial Operations[a]	Long-Term Operations
Source area Extraction Well and Injection wells[b]	SEW-1, IW-1, IW-2	Weekly	Quarterly for 3 years
Downgradient Containment Extraction Wells[c]	DEW-1 and DEW-2	Weekly	Quarterly for 20 years
Treatment System[d]	Influent and effluent; and intermediate locations	Weekly	Monthly for 20 years
Treatment System POTW[e]	Effluent to POTW[c,e]	N/A	Bi-monthly

[a] Initial operations typically last one to four weeks. During this time, the remediation process is being fine tuned to operate at maximum efficiency given the Site conditions.
[b] It is assumed that only one WDR permit will be required for the ISCO and groundwater injection wells (see Table 4-1). Injection wells and extraction wells will be sampled for the same parameters under the WDR permit for ISCO (see Table 4-1, footnote #1).
[c] Extraction wells will be sampled for the same parameters under the LARWQCB WDR permit for the bioremediation barrier (see Table 4-1, footnote #3).
[d] Treatment system influent and effluent analyzed for VOCs and 1,4-dioxane only. Two intermediate sample locations (prior to LGAC and between LGAC vessels) will be analyzed monthly for VOCs only.
[e] Per the Los Angeles County Sanitation District (LASCD), self-monitoring at the location of the discharge to the sewer lateral will be required as a permit condition. It is expected the permit requirement will require semimonthly sampling for chemical oxygen demand (COD) and suspend solids (SS), and quarterly for VOCs.

N/A = not applicable

TABLE 4-3

Design Assumptions for OU 1 (Groundwater Remedial Action)

Contaminants of Concern (COC): 1,2,3-TCP; TCE; 1,2-DCA; vinyl chloride; 1,2-DCP; 1,1-DCA; cis-1,2-DCE; PCE; trans-1,2-DCE; 1,1-DCE; benzene; and 1,4-dioxane.
Contaminant source area (i.e., 100 ppb plume) delineated during previous site investigations.
Site consists largely of sandy silts, silty sands, sand interspersed with minor layers of silts and clay.
Remedial Action includes installation of the following key elements.
Ozone/Hydrogen Peroxide (Peroxone) Injection Wells: – Number: 12 new and 3 existing wells. – Location: To be installed in the source area (i.e., 100 ppb plume) to form a double "V" shaped pattern in conjunction with the three existing peroxone injection wells. – Well design: Pre-fabricated injection assemblies, each completed with 1-inch outer diameter (OD) casing, 0.02-inch, V-slotted screens, 0.5-inch OD tubing, and check valves. – Total well depth: 100 ft bgs. – Injection intervals: 2 per location at 75 and 95 ft bgs (approximately). – Injection depth: 10 ft below the target groundwater contamination. – Radius of influence: 25 ft (minimum). – Oxidant: Ozone and hydrogen peroxide. – Ozone injection rate: Up do 2 lbs/day per injection well (<1.0 molar ratio of H_20_2/O_3). – System design treatment concentration: > 50 µg/L.
Ozone/Hydrogen Peroxide Conduits: – 1-1/2" diameter PVC Schedule 40 conduit to contain 1 each 3/8" Teflon tubing and 1/4" polyethylene tubing. Notes: Teflon tubing for ozone; polyethylene tubing for hydrogen peroxide
In Situ Chemical Oxidation (ISCO) Trailers: – Number: 2 – Size: Approximately 21′ × 7′ – Location: Inside warehouse on site – Components: ▪ ozone generation system—up to 15 lbs/day ▪ oxygen generation system—up to 130 lbs/day (up to 95% concentration) ▪ reagent distribution capacity—up to 10 ozone and 10 hydrogen peroxide injection points ▪ hydrogen peroxide system—150-gal tank (up to 35% solution) 75 gal/day at 25 psig injection capacity ▪ compressed air system—up to 120 psig pressure, up to 18 scfm injection capacity
Permeable Bioremediation Barrier: – Reductive dechlorination enhancing substrate. – Number injection points: 180. – Location: To be installed downgradient of the source area, along Southern Avenue. – Length of barrier: 350 ft. – Total boring depth: 100 ft bgs. – Injection intervals: 80 to 100 ft bgs. – Injection depth: 100 ft bgs (approximately).
Groundwater Extraction Wells: – Number: 3. – Location: One well to be installed downgradient of the source area to address groundwater containing contaminants at concentrations less than the ISCO design concentration (i.e., 50 µg/L) but greater than cleanup goals. Two wells to be installed downgradient near the 5 ppb plume boundary to contain the contaminant plume. – Total well depth: 105 ft bgs (for source area well); 115 ft bgs (for downgradient extraction wells). – Screen depth: 60 to 100 ft bgs for source area wells; 65 to 112 ft bgs for downgradient wells. – Extraction Rate: 25 gpm for source area; 20 gpm each for downgradient wells.

TABLE 4-3

(Continued)

Groundwater Injection Wells: – Number: 2. – Location: To be installed upgradient of the Peroxone Injection Well field. – Total well depth: 90 ft bgs. – Injection depth: 55 to 85 ft. – Groundwater injection rate: 15 gpm each.
Groundwater Extraction and Injection Well Piping: – Piping diameter: 2” HDPE SDR-11. – Length of pipe: Approximately 1,800′ (extraction wells) and 600′ (injection wells). – Buried at a depth of 2′ in sand layer, with magnetic tape.
Groundwater Treatment System: – Location: On site, next to warehouse. – Components: (a) Ex situ advanced oxidation process (also to be used for cleanup of perched aquifer groundwater as part of soil remedial action) and (b) two liquid-phase granular activated carbon (LGAC) vessels. – Compound dimensions: 32′ × 40′, 6” thick concrete slab with 6” berm, chain-link fence all around with one man-gate and one equipment gate. – Treatment water: All extraction wells and 5 gpm of perched aquifer. – Fate of treated water: Groundwater injection wells (as discussed above) and release to on-site sanitary sewer location under a LACSD permit. – Water treatment rate: 70 gpm (including 2 downgradient wells, 1 source area extraction well, and 5 gpm for perched aquifer).

bgs = below ground surface
COC = constituent of concern
ft = feet
gpm = gallons per minute
HRC = hydrogen release compound
ISCO = in-situ chemical oxidation
LACSD = Los Angeles County Sanitation District
lbs = pounds
LGAC = liquid granular activated carbon
OD = outer diameter
OU = operable unit
ppb = parts per billion
psig = pounds per square inch gauge
PVC = polyvinyl chloride
scfm = standard cubic feet per minute
µg/L = micrograms per liter

FIGURES

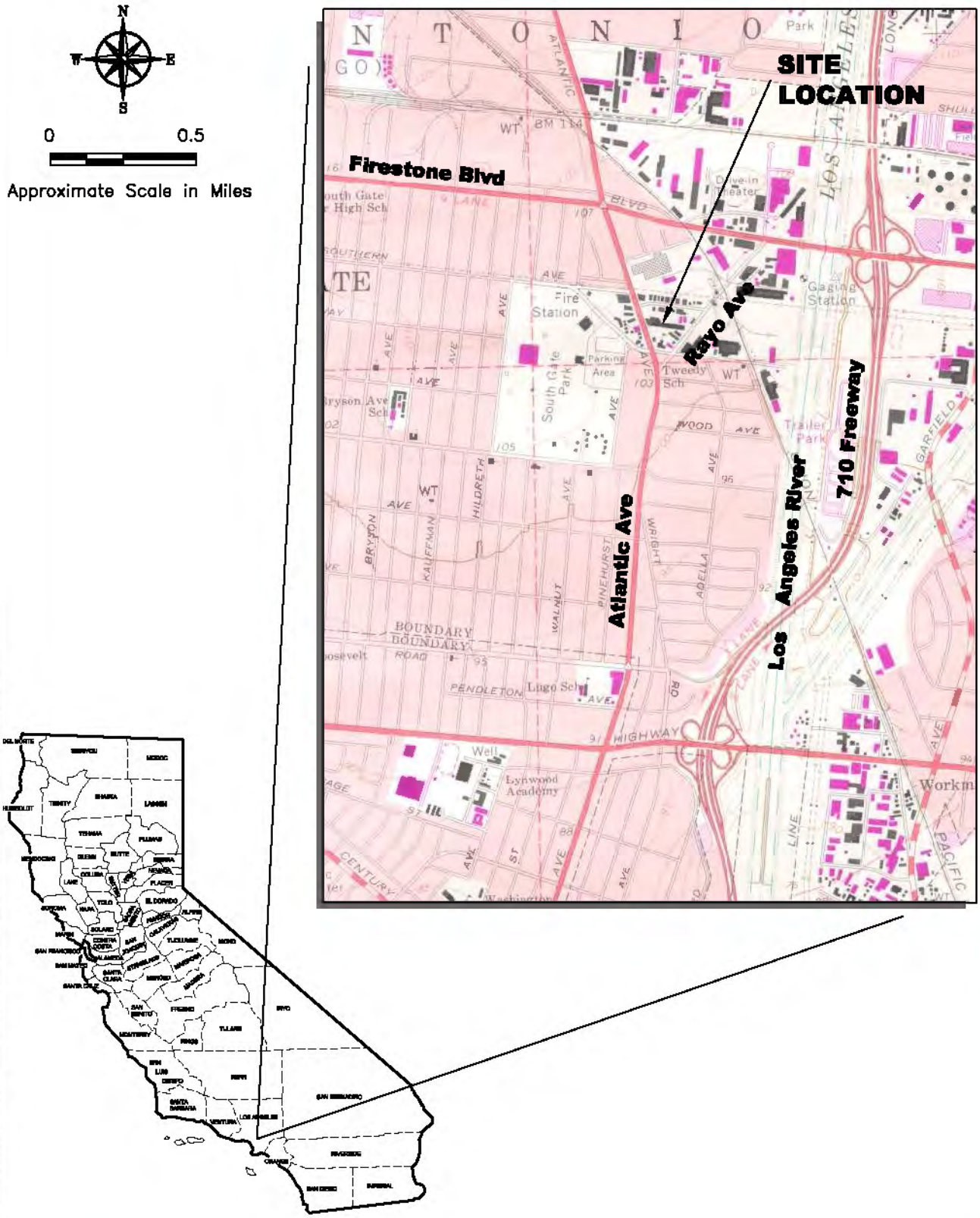

URS
2870 GATEWAY OAKS DRIVE, SUITE 300
SACRAMENTO, CA 95833

Cooper Drum Superfund Site
South Gate, CA

Figure 1-1
Site Location Map

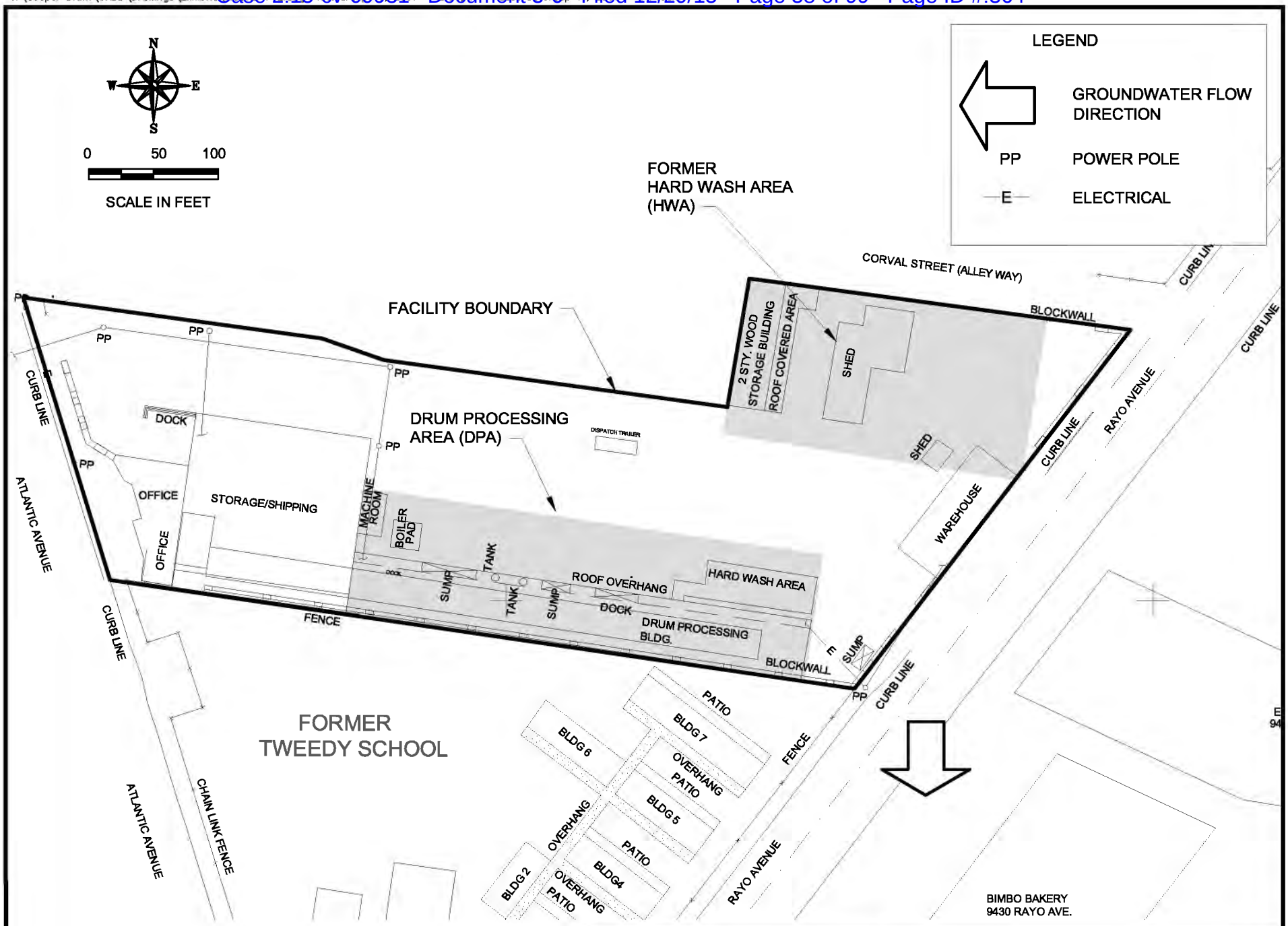

URS
2870 GATEWAY OAKS DRIVE, SUITE 300
SACRAMENTO, CA 95833

Cooper Drum Superfund Site
South Gate, CA

Figure 1-2
Site Layout Map

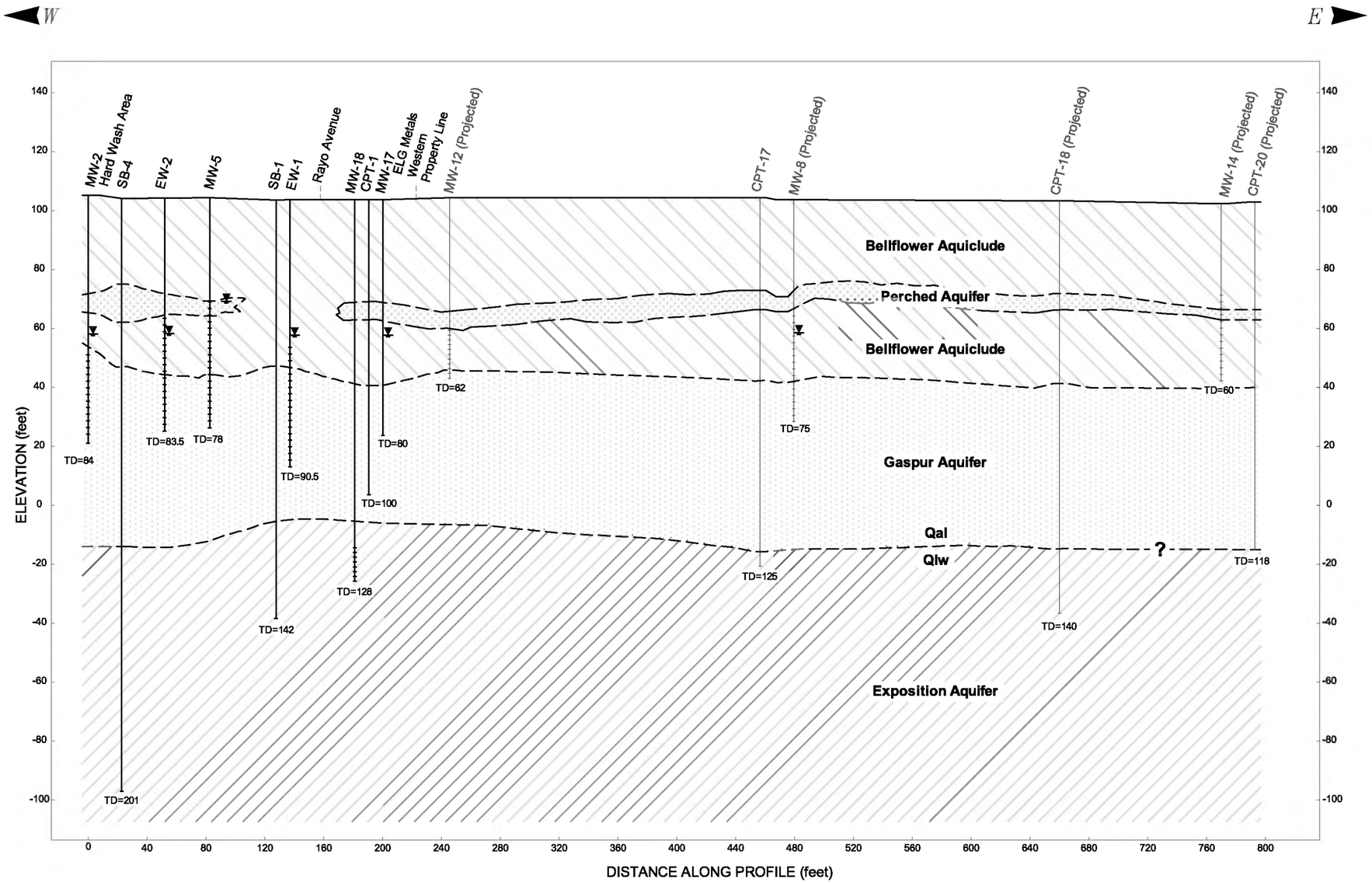

EXPLANATION:

CPT-1 — Borehole Number

Well Construction

Screened Interval

Water Level December 14, 2000

Qal = Quaternary Alluvium
Qlw = Upper Pleistocare lakewood formation

0 40

Horizontal Scale (feet)
Scale: 1" = 80'
Vertical Exaggeration: 4x
Scale: 1" = 40'

URS

Generalized Geologic Cross Section

Figure 2-1

DRAWING: FIGURE 2-2_2-3.dwg
DRAWING: J:\Cooper Drum\CADD\Drawings\Exhibits\

XREFS: J:\Cooper Drum\CADD\Drawings\XR-NEW-BACKGRD2.dwg J:\Cooper Drum\CADD\Drawings\xref_base.dwg J:\Cooper Drum\CADD\Drawings\XR-GW-n-wells.dwg
PLOT BY: DAVID_LARSON - Sep 13, 2007 - 2:52:35pm
IMAGES:

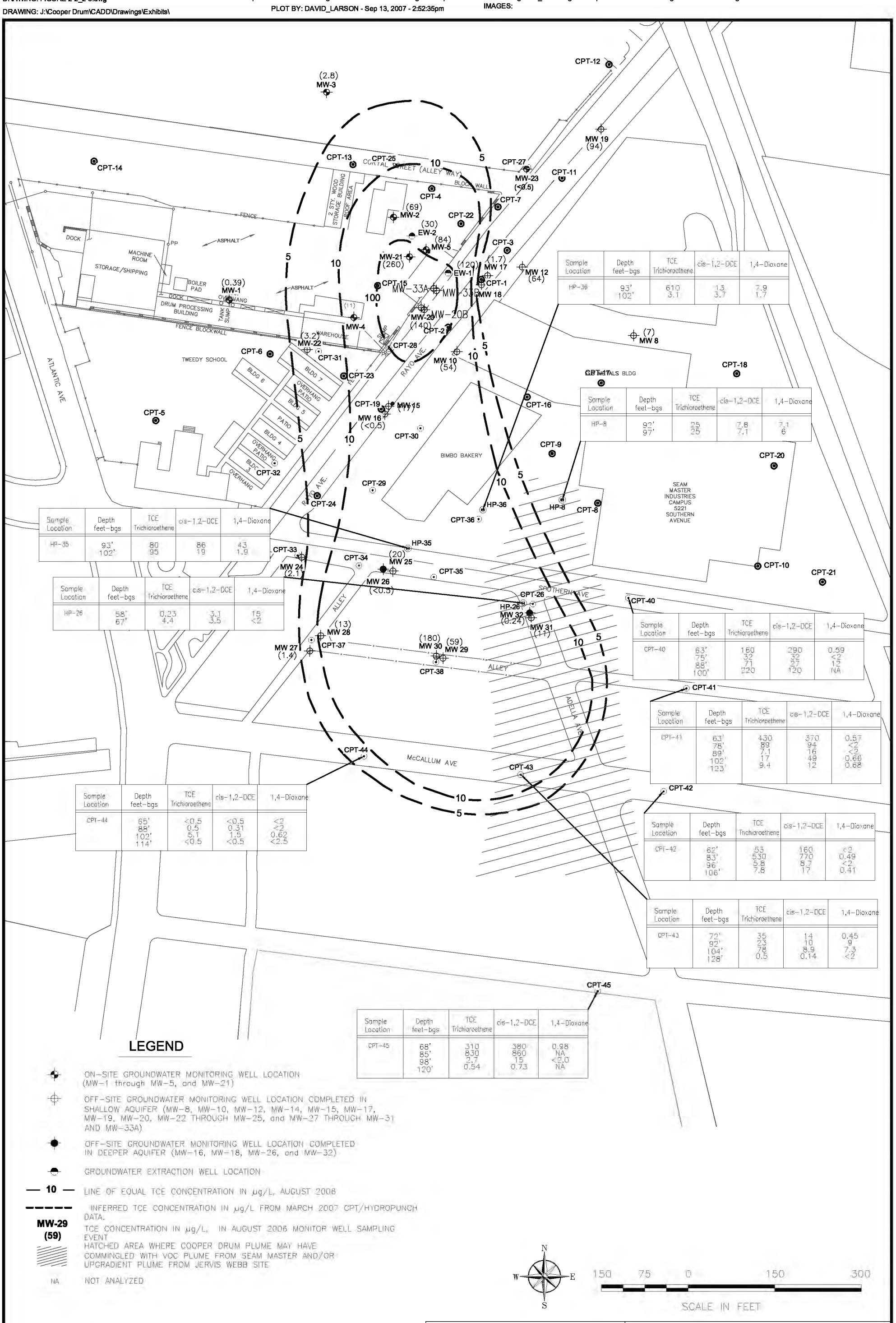

Sample Location	Depth feet-bgs	TCE Trichloroethene	cis-1,2-DCE	1,4-Dioxane
HP-36	93' 102'	610 3.1	13 3.7	7.9 1.7

Sample Location	Depth feet-bgs	TCE Trichloroethene	cis-1,2-DCE	1,4-Dioxane
HP-8	92' 97'	25 25	7.8 7.1	7.1 6

Sample Location	Depth feet-bgs	TCE Trichloroethene	cis-1,2-DCE	1,4-Dioxane
HP-35	93' 102'	80 95	86 19	43 1.9

Sample Location	Depth feet-bgs	TCE Trichloroethene	cis-1,2-DCE	1,4-Dioxane
HP-26	58' 67'	0.23 4.4	3.1 3.5	15 <2

Sample Location	Depth feet-bgs	TCE Trichloroethene	cis-1,2-DCE	1,4-Dioxane
CPT-40	63' 75' 88' 100'	160 32 71 220	290 32 27 120	0.59 <2 12 NA

Sample Location	Depth feet-bgs	TCE Trichloroethene	cis-1,2-DCE	1,4-Dioxane
CPT-41	63' 78' 89' 102' 123'	430 89 7.1 17 9.4	370 94 16 49 12	0.57 <2 <2 0.66 0.68

Sample Location	Depth feet-bgs	TCE Trichloroethene	cis-1,2-DCE	1,4-Dioxane
CPT-44	65' 88' 102' 114'	<0.5 0.5 5.1 <0.5	<0.5 0.31 1.5 <0.5	<2 <2 0.62 <2.5

Sample Location	Depth feet-bgs	TCE Trichloroethene	cis-1,2-DCE	1,4-Dioxane
CPT-42	62' 83' 96' 106'	53 530 5.8 7.8	160 770 8.7 17	<2 0.49 <2 0.41

Sample Location	Depth feet-bgs	TCE Trichloroethene	cis-1,2-DCE	1,4-Dioxane
CPT-43	72' 92' 104' 128'	35 23 78 0.5	14 10 8.9 0.14	0.45 9 7.3 <2

Sample Location	Depth feet-bgs	TCE Trichloroethene	cis-1,2-DCE	1,4-Dioxane
CPT-45	68' 85' 98' 120'	310 830 2.7 0.54	380 860 15 0.73	0.98 NA <2.0 NA

LEGEND

- ON-SITE GROUNDWATER MONITORING WELL LOCATION (MW-1 through MW-5, and MW-21)
- OFF-SITE GROUNDWATER MONITORING WELL LOCATION COMPLETED IN SHALLOW AQUIFER (MW-8, MW-10, MW-12, MW-14, MW-15, MW-17, MW-19, MW-20, MW-22 THROUGH MW-25, and MW-27 THROUGH MW-31 AND MW-33A)
- OFF-SITE GROUNDWATER MONITORING WELL LOCATION COMPLETED IN DEEPER AQUIFER (MW-16, MW-18, MW-26, and MW-32)
- GROUNDWATER EXTRACTION WELL LOCATION
- — 10 — LINE OF EQUAL TCE CONCENTRATION IN µg/L, AUGUST 2006
- INFERRED TCE CONCENTRATION IN µg/L FROM MARCH 2007 CPT/HYDROPUNCH DATA.
- MW-29 (59) TCE CONCENTRATION IN µg/L, IN AUGUST 2006 MONITOR WELL SAMPLING EVENT
- HATCHED AREA WHERE COOPER DRUM PLUME MAY HAVE COMMINGLED WITH VOC PLUME FROM SEAM MASTER AND/OR UPGRADIENT PLUME FROM JERVIS WEBB SITE
- NA NOT ANALYZED

N W E S

150 75 0 150 300
SCALE IN FEET

URS
2870 Gateway Oaks Dr., Ste. 150
Sacramento, CA 95833-3200
TEL: (916) 679-2000
FAX: (916) 679-2900

Cooper Drum Company
South Gate, California

FIGURE 2-2
EXISTING WELL LOCATIONS AND 2007 CPT HYDROPUNCH RESULTS

DRAWING: FIGURE 2-2_2-3.dwg
DRAWING: J:\Cooper Drum\CADD\Drawings\Exhibits\

XREFS: J:\Cooper Drum\CADD\Drawings\XR-NEW-BACKGRD2.dwg J:\Cooper Drum\CADD\Drawings\xref_base.dwg J:\Cooper Drum\CADD\Drawings\XR-GW-n-wells.dwg
PLOT BY: DAVID_LARSON - Sep 19, 2007 - 3:46:21pm
IMAGES:

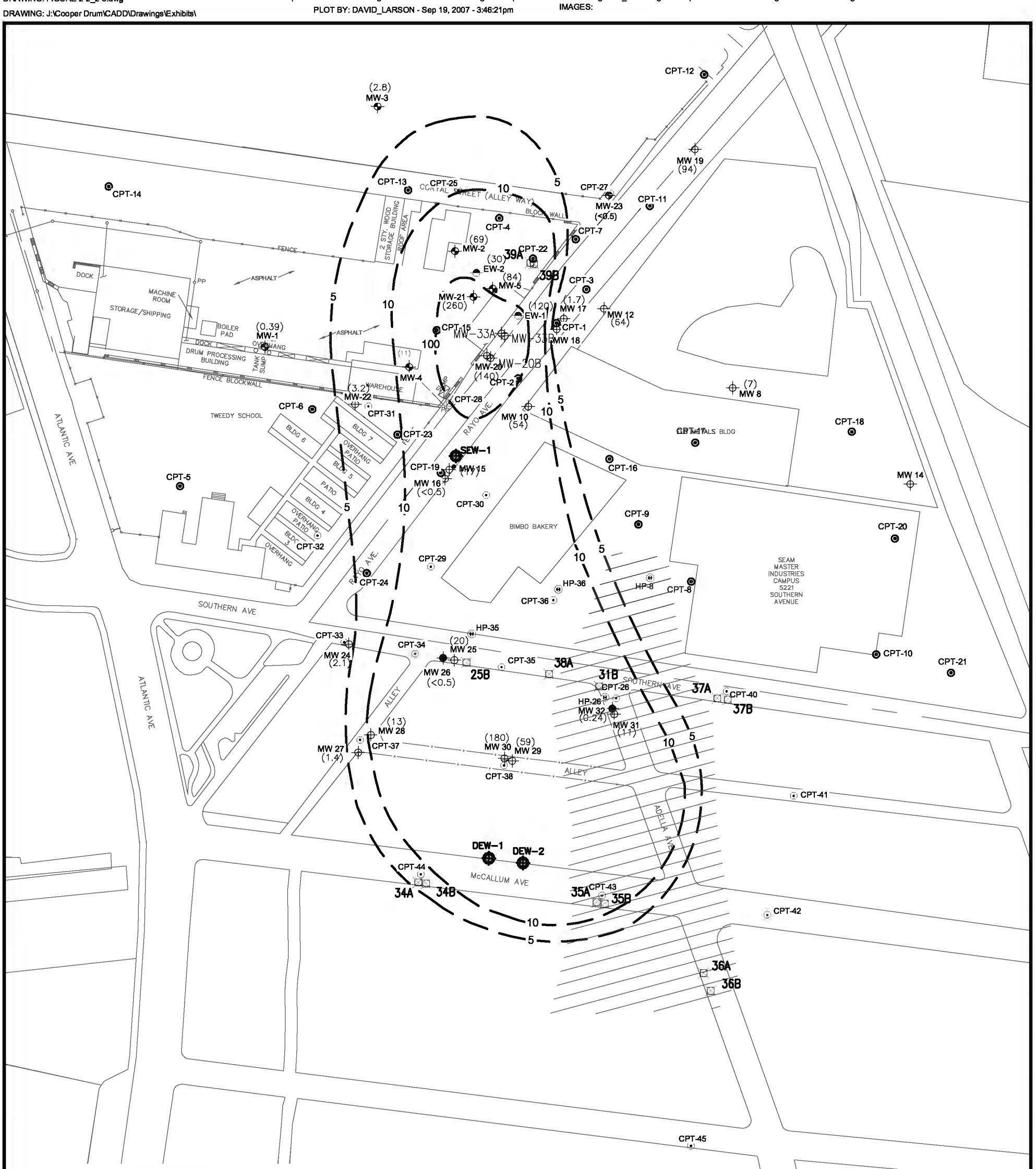

URS
2870 Gateway Oaks Dr., Ste. 150
Sacramento, CA 95833-3200
TEL: (916) 679-2000
FAX: (916) 679-2900

Cooper Drum Company
South Gate, California

FIGURE 2-3
PROPOSED MONITOR WELL AND EXTRACTION WELL LOCATIONS FOR REMEDIAL ACTION

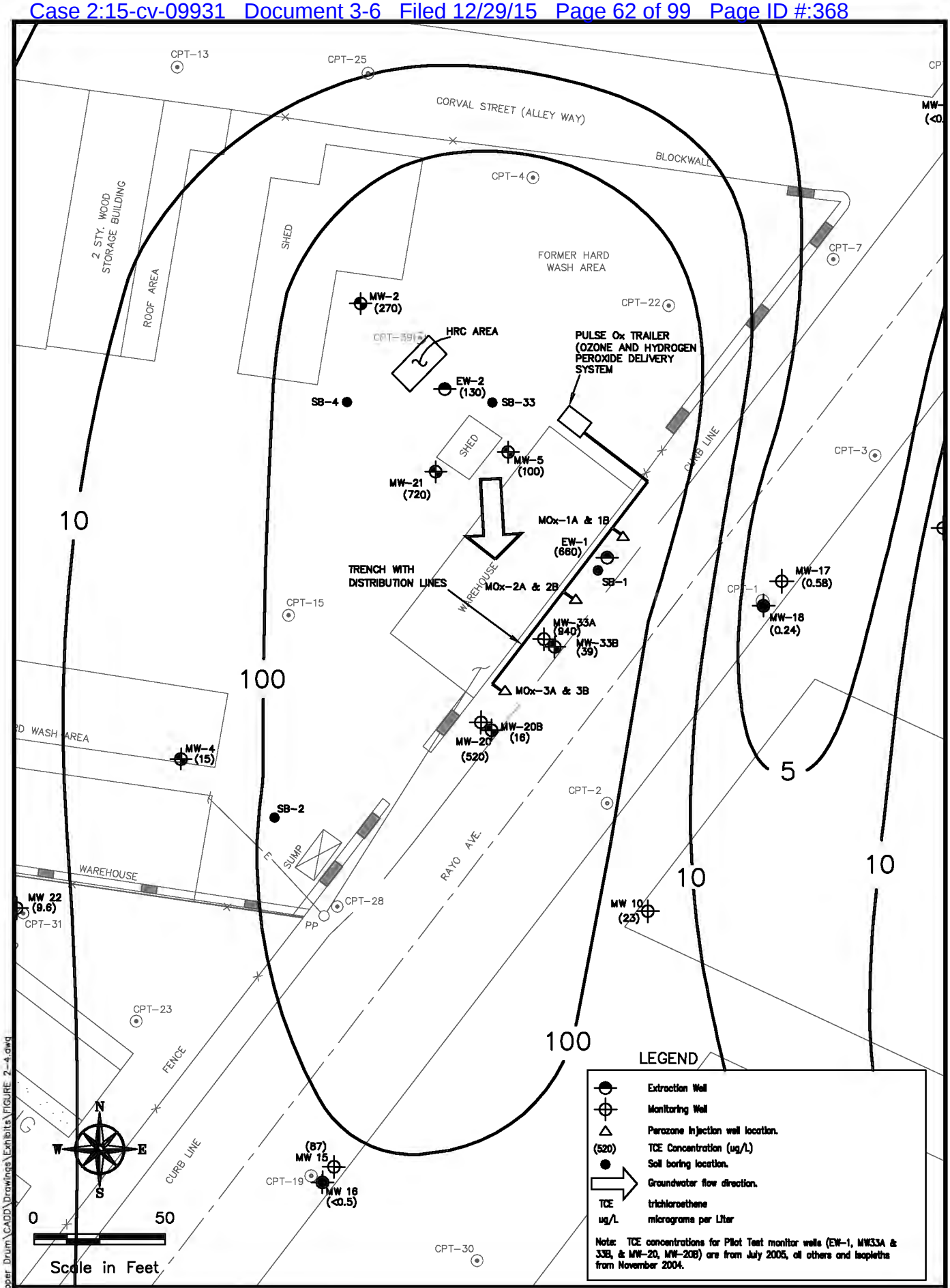

DRAWING: J:\Cooper Drum\CADD\Drawings\Exhibits\FIGURE 2-4.dwg

URS
2870 GATEWAY OAKS DRIVE, SUITE 300
SACRAMENTO, CA 95833

Cooper Drum Superfund Site
South Gate, CA

Figure 2-4
ISCO Field Pilot Test Layout w/ Baseline (November 2004) TCE Concentrations

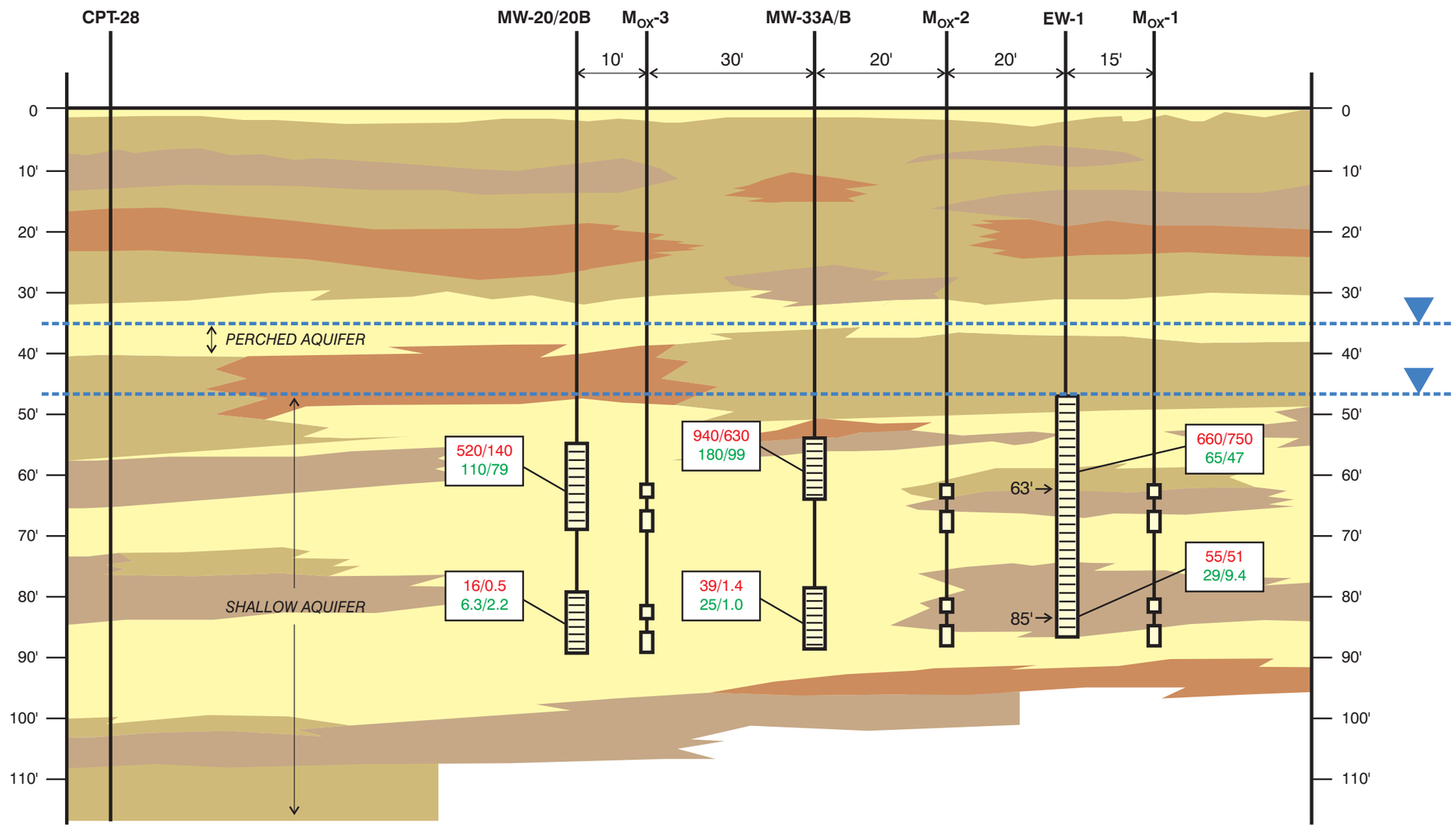

Legend

CPT - cone penetrometer test

TCE - trichloroethene

μg/L - micrograms per liter

16/0.5 — Pre-pilot test concentration (μg/L) of TCE/1,4-Dioxane

6.3/2.2 — End of test concentration (μg/L) of TCE/1,4-Dioxane

Silts with very fine sands or clayey silts

Silty sands, sand-silt mixtures

Clays with sand or silts

Sand with little or no fines

Hydrogen peroxide injection screen

Ozone injection screen

Monitoring well screen

Cooper Drum\07-06-cross-section.cdr - VMG 09/11/07 SAC2

Figure 2-5
ISCO Pilot Test Injection Well Layout
Cooper Drum Superfund Site, South Gate, CA

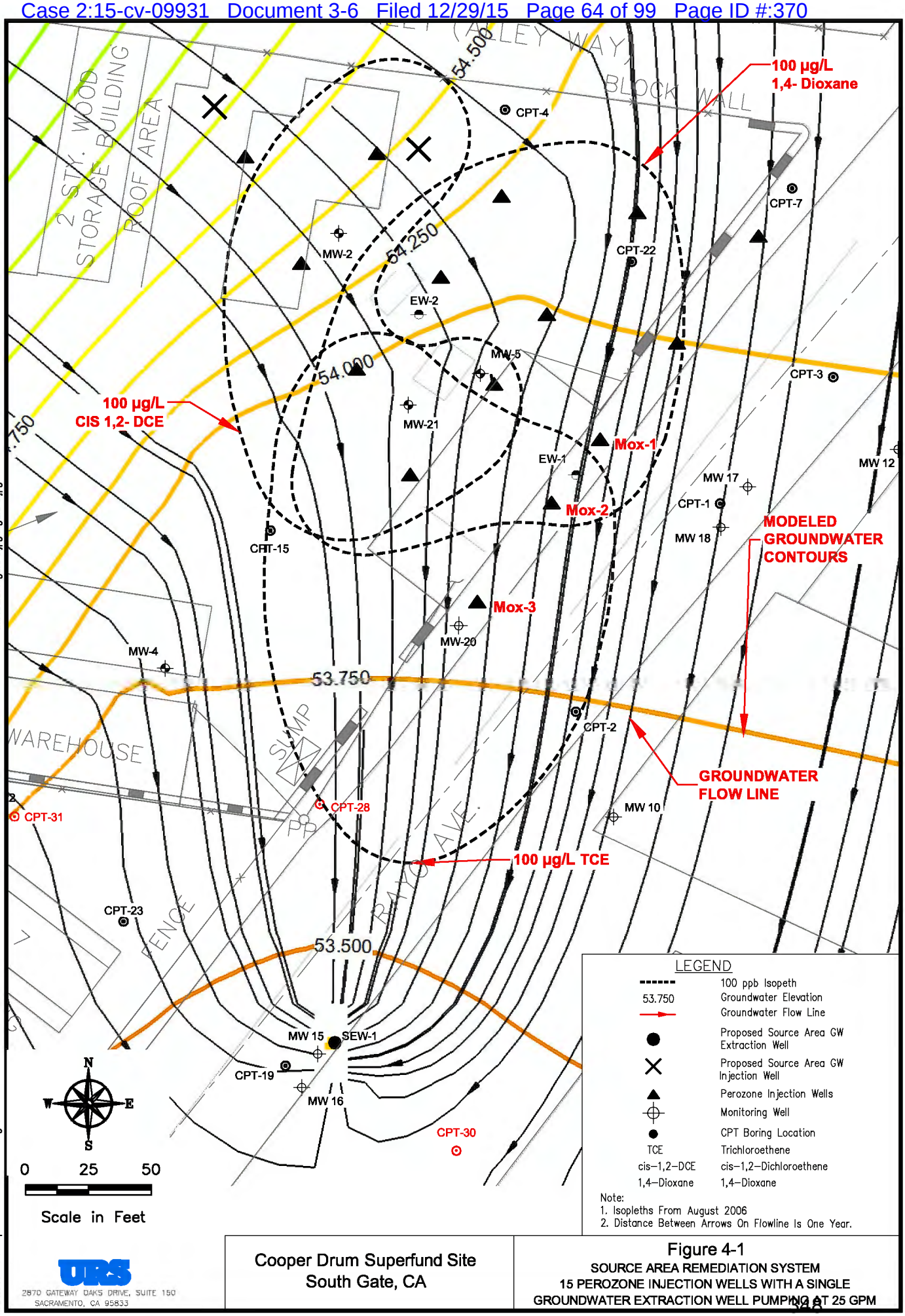

URS
2870 GATEWAY OAKS DRIVE, SUITE 150
SACRAMENTO, CA 95833

Cooper Drum Superfund Site
South Gate, CA

Figure 4-1
SOURCE AREA REMEDIATION SYSTEM
15 PEROZONE INJECTION WELLS WITH A SINGLE
GROUNDWATER EXTRACTION WELL PUMPING AT 25 GPM

DRAWING: FIGURE 4-1.dwg
DRAWING: J:\Cooper Drum\CADD\Drawings\Exhibits\
XREFS: J:\Cooper Drum\CADD\Drawings\XR-NEW-BACKGRD2.dwg J:\Cooper Drum\CADD\Drawings\xref_base.dwg
IMAGES: Figure 6.jpg Figure-6.jpg
PLOT BY: DAVID_LARSON - Sep 13, 2007 - 3:04:50pm

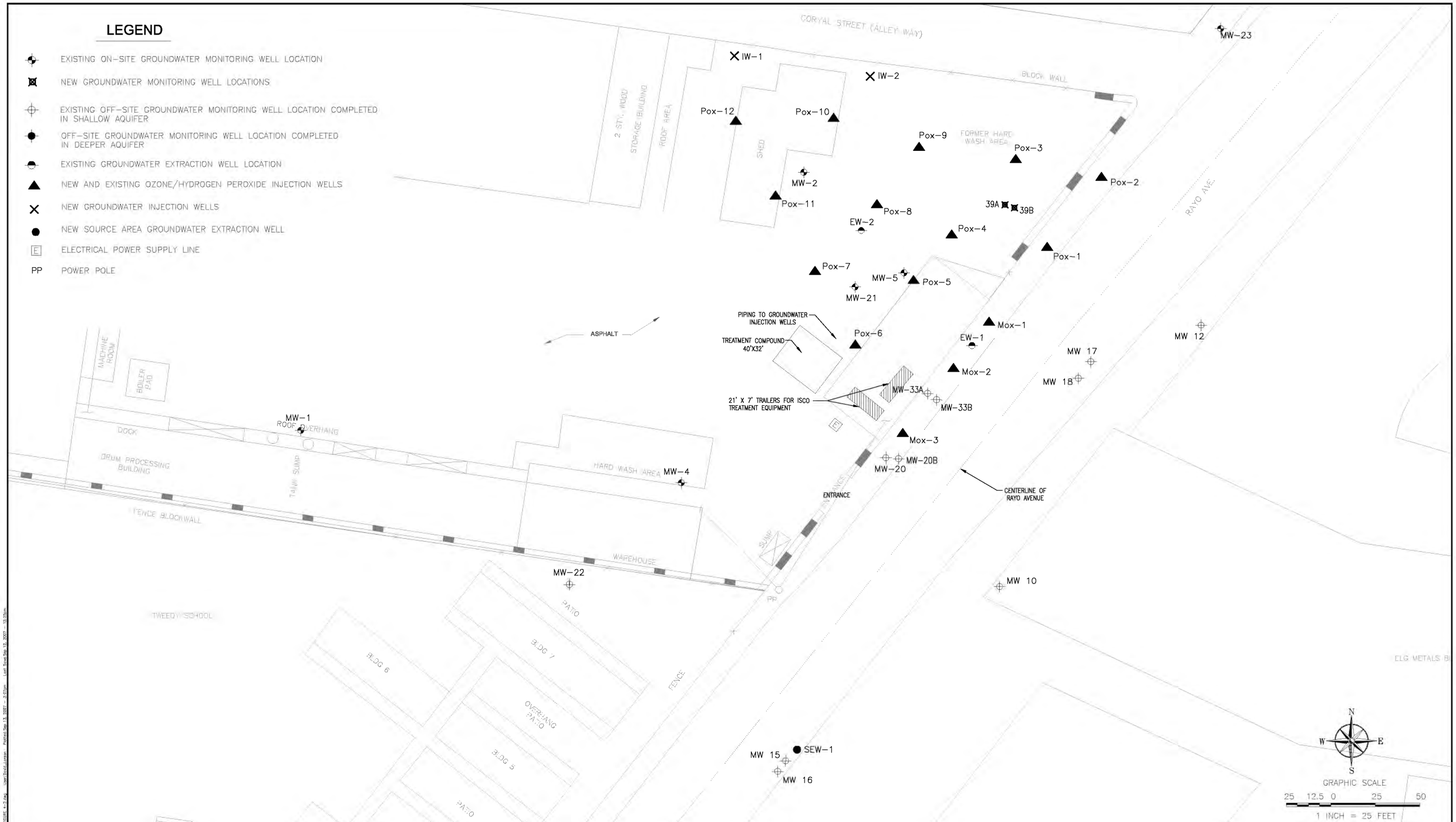

NO.	DATE	DESCRIPTION	NO.	DATE	DESCRIPTION

REVISIONS

DESIGNED BY: M.WIDMANN
DRAWN BY: D. LARSON
CHECKED BY: N/A

URS
2870 Gateway Oaks Drive, Ste. 150
Sacramento, CA 95833-3200
TEL: (916) 679-2000
FAX: (916) 679-2900

COOPER DRUM
GROUNDWATER REMEDIATION SYSTEM
9316 SOUTH ATLANTIC AVE, SOUTH GATE
LOS ANGELES COUNTY , CALIFORNIA 90280

OU1 SOURCE AREA REMEDIATION SYSTEM MAP

SCALE:	DATE:	DWG. FILE:	SHEET NO.
1"=25'-0"	8/23/2007	FIGURE 4-2.dwg	FIGURE 4-2

DRAWING: Don-071907-FIG-3-3-DWN-GRD-CONT.dwg
DRAWING: C:\Documents and Settings\rptaylor\Desktop\
XREFS: C:\Documents and Settings\rptaylor\Desktop\NEW-BACKGRD2.dwg
PLOT BY: ROBERT_P_TAYLOR - Sep 12, 2007 - 3:16:23pm
IMAGES: Figure 8.jpg

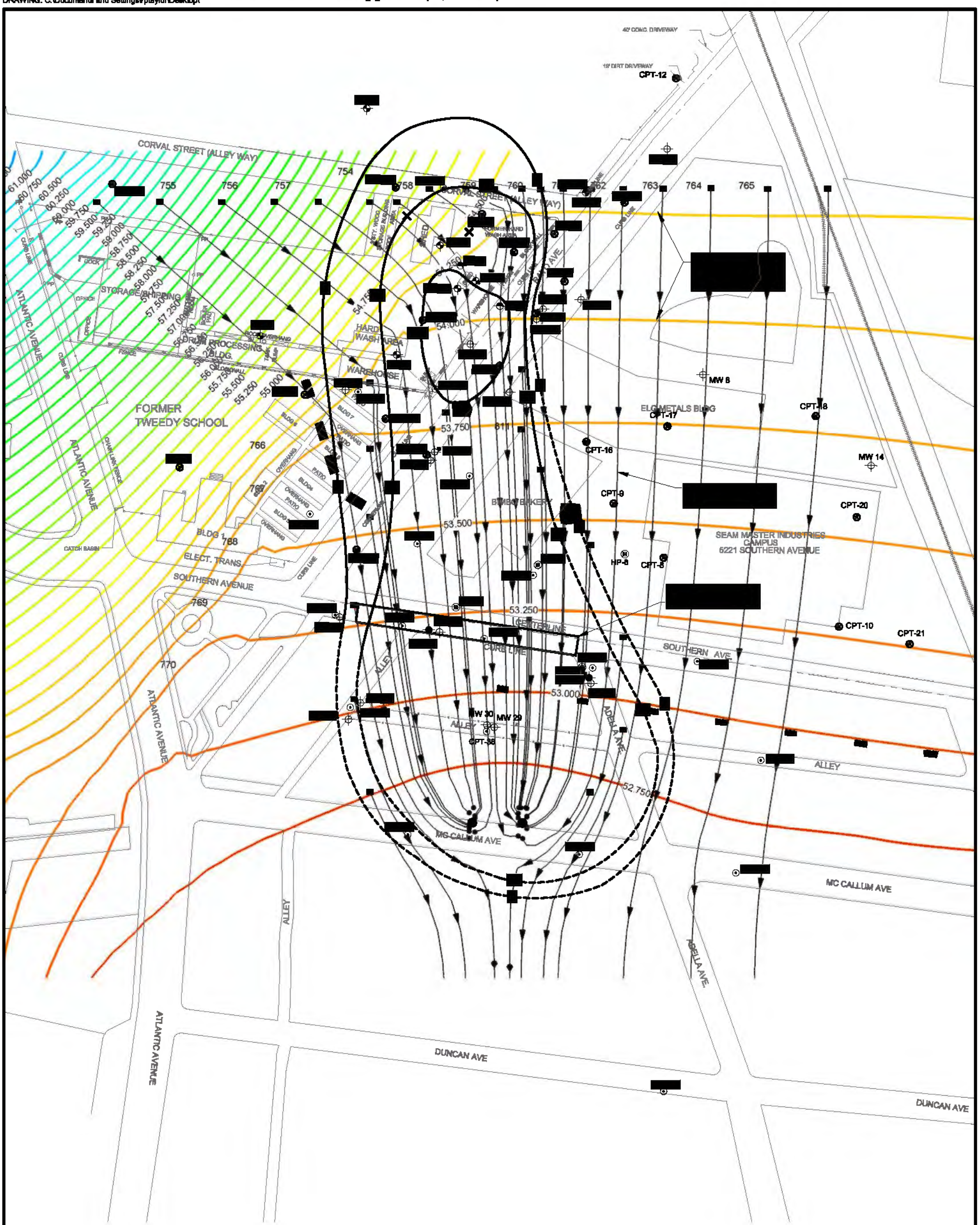

LEGEND

------	100 ppb Isopeth
–56.75–	Groundwater Elevation
—►	Groundwater Flow Line
●	Proposed Downgradient Groundwater Extraction Well
✕	Proposed Source Area Groundwater Injection Well
⊕	Monitoring Well
◉	CPT Boring Location
TCE	Trichloroethene
cis–1,2–DCE	cis–1,2–Dichloroethene
1,4–Dioxane	1,4–Dioxane

Note:
1. Isopleths From August 2006 and 2007 CPT investigation.
2. Distance Between Arrows On Flowline Is One Year.

N W E S

150 75 0 150 300
SCALE IN FEET

URS
2870 Gateway Oaks Dr., Ste. 150
Sacramento, CA 95833-3200
TEL: (916) 679-2000
FAX: (916) 679-2900

Cooper Drum Superfund Site
South Gate, CA

Figure 4-3
DOWNGRADIENT CONTAINMENT REMEDATION SYSTEM TWO GROUNDWATER EXTRACTION WELLS (20 gpm each)

UNITED STATES ENVIRONMENTAL PROTECTION AGENCY
REGION IX

GROUNDWATER REMEDIAL DESIGN

OPERABLE UNIT 1
COOPER DRUM COMPANY SUPERFUND SITE

PREPARED BY
URS GROUP, INC.

SEPTEMBER 2007

J:\Cooper Drum\CADD\Drawings\GROUNDWATER REMEDIATION SYSTEM\C-1.dwg User:David.Larsen Plotted:Sep 24, 2007 - 3:08pm Last Save:Sep 24, 2007 - 2:47pm

VICINITY MAP

THE SITE

LOCATION MAP

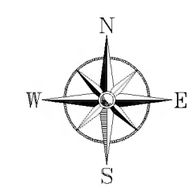

SHEET INDEX

G–1	TITLE SHEET
G–2	SITE LOCATION MAP, SHEET INDEX, AND GENERAL NOTES
P–1	OZONE/HYDROGEN PEROXIDE INJECTION SYSTEM SIMPLIFIED PROCESS FLOW DIAGRAM
P–2	SIMPLIFIED GROUNDWATER AND SOIL GAS REMEDIATION SYSTEM PROCESS FLOW DIAGRAM
C–1	TREATMENT COMPOUND LOCATION AND SITE PLAN
C–2	DOWNGRADIENT CONTAINMENT AND TREATMENT SYSTEM
C–3	TRENCH DETAILS
C–4	SAMPLING BOX DETAIL
C–5	FENCE DETAILS
C–6	WELL CONSTRUCTION DETAILS
S–0	STRUCTURAL GENERAL NOTES
S–1	SOURCE AREA TREATMENT COMPOUND PLAN
S–2	CONCRETE DETAILS
M–1	TYPICAL WELL HEAD DETAILS
E–1	ELECTRICAL GENERAL NOTES AND SYMBOLS
E–2	ELECTRICAL SITE PLAN
E–3	ELECTRICAL SITE PLAN DOWNGRADIENT EXTRACTION WELLS
E–4	SINGLE LINE DIAGRAM

NO.	DATE	DESCRIPTION	NO.	DATE	DESCRIPTION

REVISIONS

DESIGNED BY: M. WIDMANN
DRAWN BY: D. LARSON
CHECKED BY: N/A

URS
2870 Gateway Oaks Drive, Sta. 150
Sacramento, CA 95833-3200
TEL: (916) 679-2000
FAX: (916) 679-2900

REGISTERED PROFESSIONAL ENGINEER EDMUND D. TARPLEY No. 64825 Exp. _____ CIVIL STATE OF CALIFORNIA

GROUNDWATER REMEDIAL DESIGN OPERABLE UNIT 1
COOPER DRUM COMPANY SUPERFUND SITE
9316 SOUTH ATLANTIC AVE, SOUTH GATE
LOS ANGELES COUNTY , CALIFORNIA 90280

SHEET LOCATION MAP, SHEET INDEX AND GENERAL NOTES

SCALE:	DATE:	DWG. FILE:	SHEET NO.
N.T.S.	8/23/2007	G–2.dwg	G-2

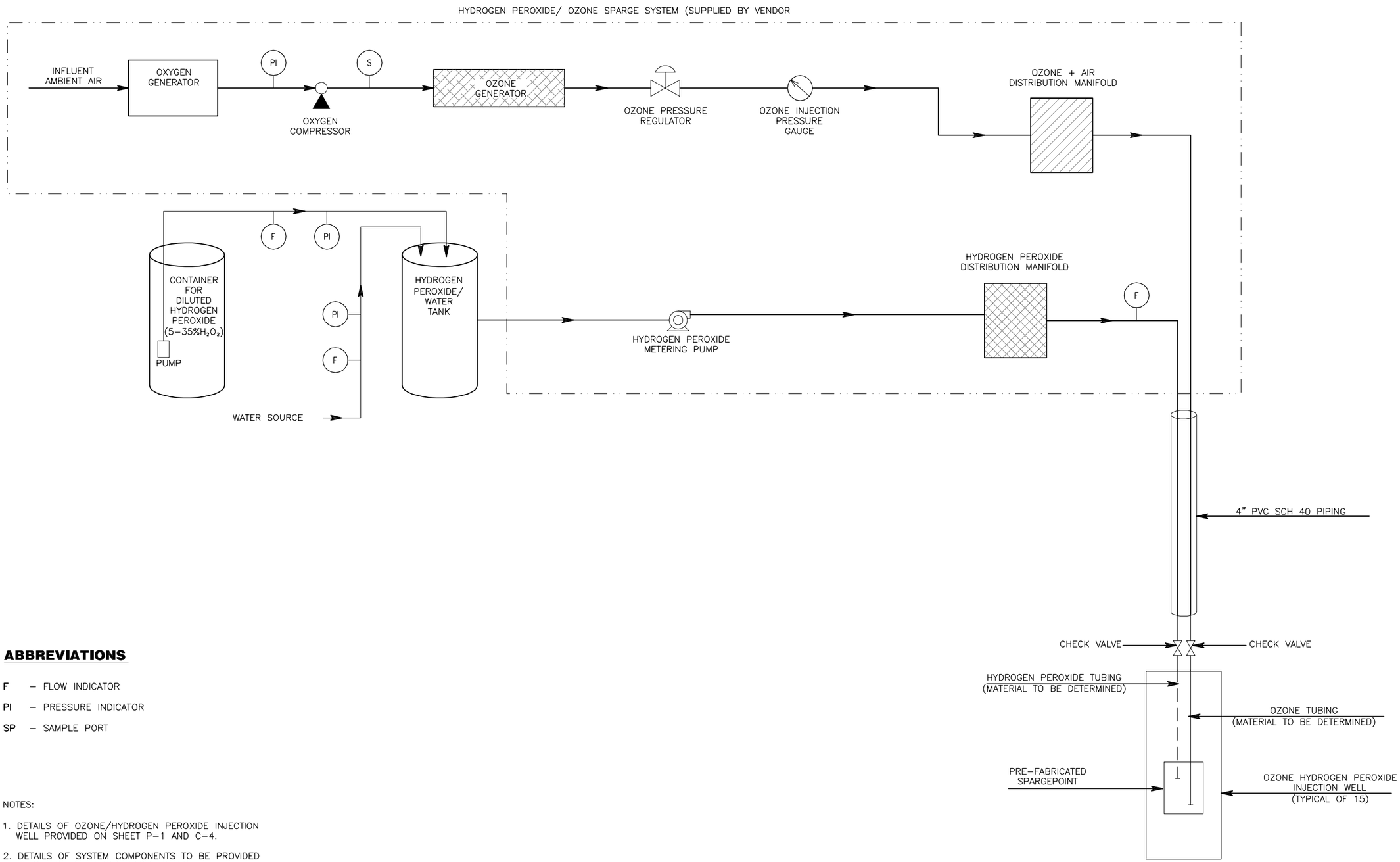

(FIGURE NOT TO SCALE)

ABBREVIATIONS

F – FLOW INDICATOR

PI – PRESSURE INDICATOR

SP – SAMPLE PORT

NOTES:

1. DETAILS OF OZONE/HYDROGEN PEROXIDE INJECTION WELL PROVIDED ON SHEET P–1 AND C–4.
2. DETAILS OF SYSTEM COMPONENTS TO BE PROVIDED BY SELECTED VENDOR PRIOR TO INSTALLATION.

NO.	DATE	DESCRIPTION	NO.	DATE	DESCRIPTION

REVISIONS

DESIGNED BY: M. WIDMANN
DRAWN BY: D. LARSON
CHECKED BY: N/A

URS
2870 Gateway Oaks Drive, Ste. 150
Sacramento, CA 95833-3200
TEL: (916) 679-2000
FAX: (916) 679-2900

REGISTERED PROFESSIONAL ENGINEER EDMOND D. TARTER No. 64825 Exp. ____ CIVIL STATE OF CALIFORNIA

GROUNDWATER REMEDIAL DESIGN OPERABLE UNIT 1
COOPER DRUM COMPANY SUPERFUND SITE
9316 SOUTH ATLANTIC AVE, SOUTH GATE
LOS ANGELES COUNTY , CALIFORNIA 90280

OZONE/HYDROGEN PEROXIDE INJECTION SYSTEM SIMPLIFIED PROCESS FLOW DIAGRAM

SCALE:	DATE:	DWG. FILE:	SHEET NO.
N.T.S.	8/23/2007	P–1.dwg	P-1

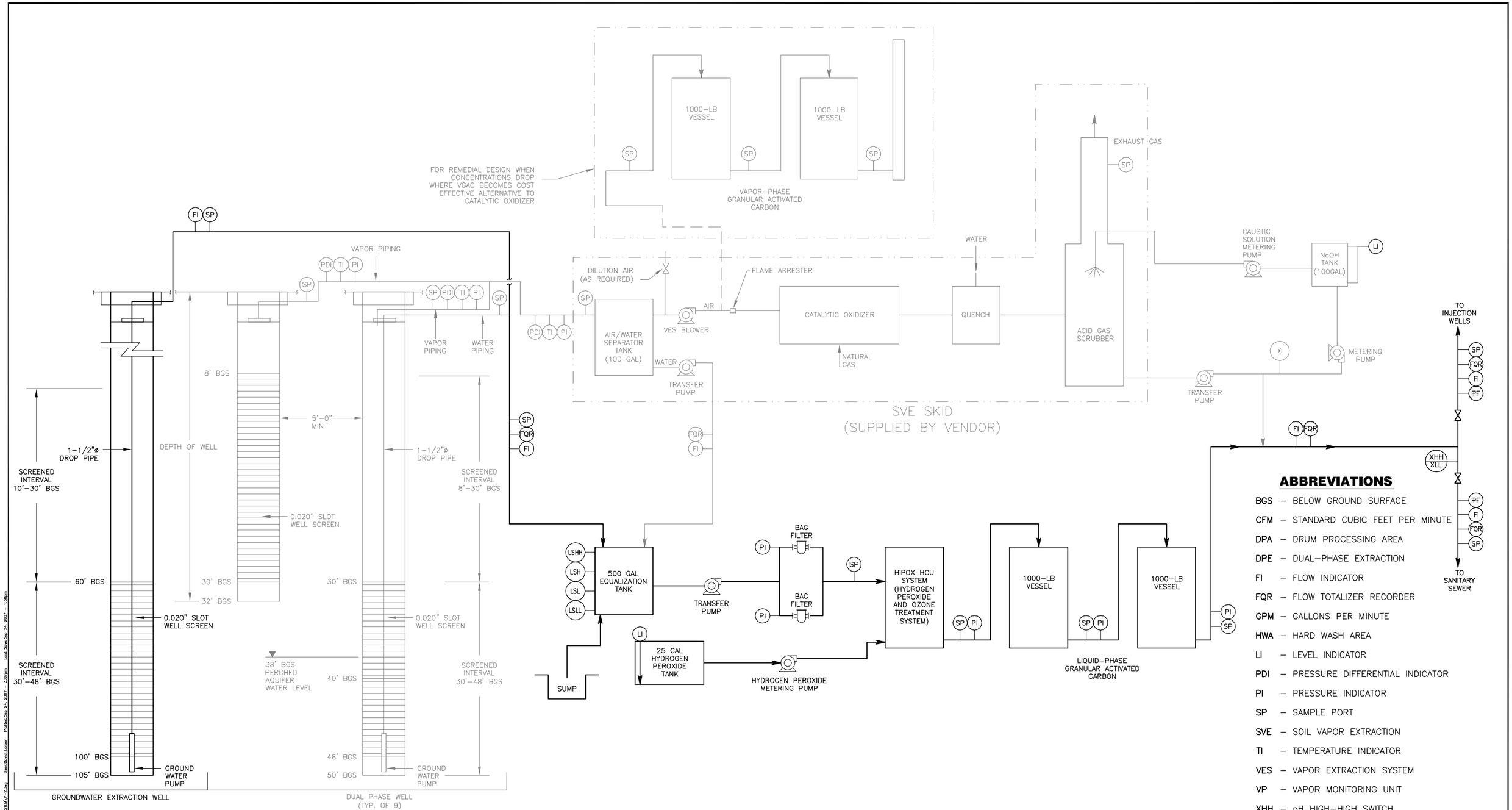

ABBREVIATIONS

- BGS – BELOW GROUND SURFACE
- CFM – STANDARD CUBIC FEET PER MINUTE
- DPA – DRUM PROCESSING AREA
- DPE – DUAL-PHASE EXTRACTION
- FI – FLOW INDICATOR
- FQR – FLOW TOTALIZER RECORDER
- GPM – GALLONS PER MINUTE
- HWA – HARD WASH AREA
- LI – LEVEL INDICATOR
- PDI – PRESSURE DIFFERENTIAL INDICATOR
- PI – PRESSURE INDICATOR
- SP – SAMPLE PORT
- SVE – SOIL VAPOR EXTRACTION
- TI – TEMPERATURE INDICATOR
- VES – VAPOR EXTRACTION SYSTEM
- VP – VAPOR MONITORING UNIT
- XHH – pH HIGH-HIGH SWITCH
- XLL – pH LOW-LOW SWITCH
- XI – pH INDICATOR

NO.	DATE	DESCRIPTION	NO.	DATE	DESCRIPTION

REVISIONS

DESIGNED BY: M. WIDMANN
DRAWN BY: D. LARSON
CHECKED BY: N/A

URS
2870 Gateway Oaks Drive, Ste. 150
Sacramento, CA 95833-3200
TEL: (916) 679-2000
FAX: (916) 679-2900

REGISTERED PROFESSIONAL ENGINEER EDMUND D. TARTER No. 64825 Exp. ____ CIVIL STATE OF CALIFORNIA

GROUNDWATER REMEDIAL DESIGN OPERABLE UNIT 1
COOPER DRUM COMPANY SUPERFUND SITE
9316 SOUTH ATLANTIC AVE, SOUTH GATE
LOS ANGELES COUNTY , CALIFORNIA 90280

SIMPLIED GROUNDWATER AND SOIL GAS REMEDIATION SYSTEM PROCESS FLOW DIAGRAM

SCALE:	DATE:	DWG. FILE:	SHEET NO.
N.T.S.	8/22/2007	P-2.dwg	P-2

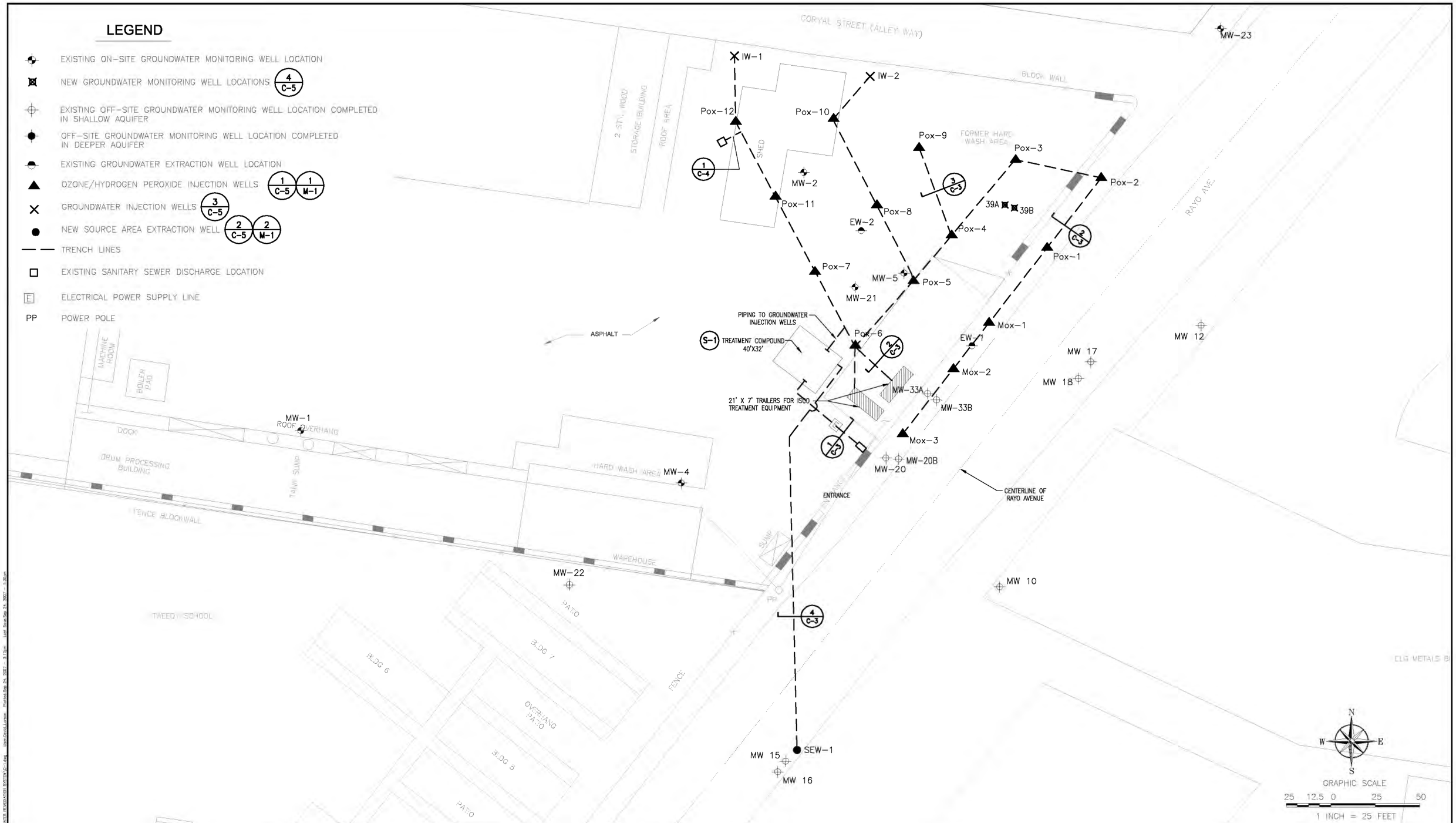

NO.	DATE	DESCRIPTION	NO.	DATE	DESCRIPTION

REVISIONS

DESIGNED BY: M.WIDMANN
DRAWN BY: D. LARSON
CHECKED BY: N/A

URS
2870 Gateway Oaks Drive, Ste. 150
Sacramento, CA 95833-3200
TEL: (916) 679-2000
FAX: (916) 679-2900

REGISTERED PROFESSIONAL ENGINEER EDMUND D. TARPLEY No. 64825 Exp. ____ CIVIL STATE OF CALIFORNIA

GROUNDWATER REMEDIAL DESIGN OPERABLE UNIT 1
COOPER DRUM COMPANY SUPERFUND SITE
9316 SOUTH ATLANTIC AVE, SOUTH GATE
LOS ANGELES COUNTY , CALIFORNIA 90280

TREATMENT COMPOUND LOCATION AND SITE PLAN

SCALE:	DATE:	DWG. FILE:	SHEET NO.
1"=25'-0"	8/23/2007	C-1.dwg	C-1

LEGEND

- EXISTING ON-SITE GROUNDWATER MONITORING WELL LOCATION
- NEW GROUNDWATER MONITORING LOCATIONS (4 / C-5)
- EXISTING OFF-SITE GROUNDWATER MONITORING WELL LOCATION COMPLETED IN SHALLOW AQUIFER
- OFF-SITE GROUNDWATER MONITORING WELL LOCATION COMPLETED IN DEEPER AQUIFER
- EXISTING GROUNDWATER EXTRACTION WELL LOCATION
- OZONE/HYDROGEN PEROXIDE INJECTION WELLS (1 / C-5) (1 / M-1)
- GROUNDWATER INJECTION WELLS (3 / C-5)
- NEW SOURCE AREA EXTRACTION WELL (2 / C-5) (2 / M-1)
- TRENCH LINES
- ELECTRICAL POWER SUPPLY LINE
- PP POWER POLE

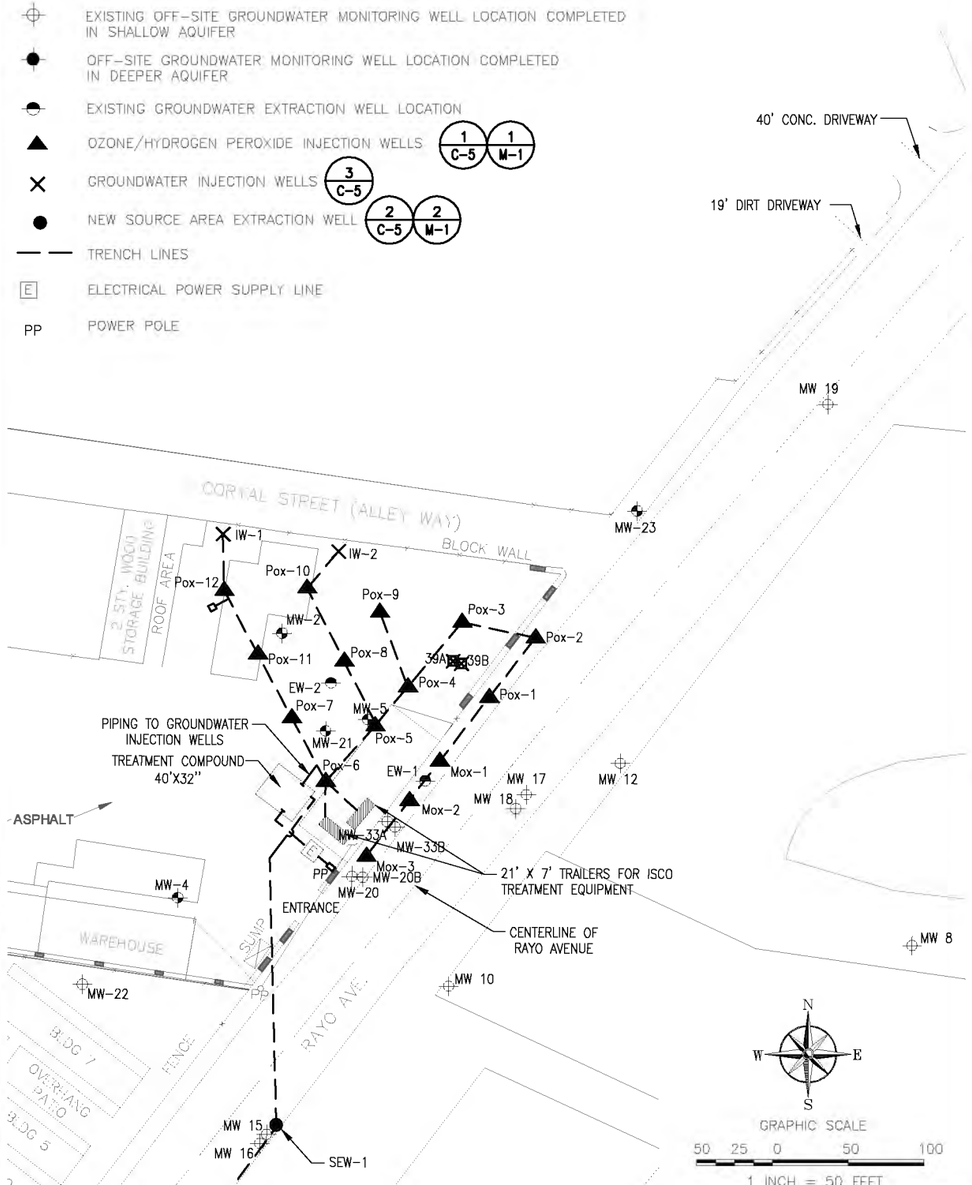

SEE CONTINUATION ON UPPER RIGHT OF THIS SHEET

SEE CONTINUATION ON LOWER LEFT OF THIS SHEET

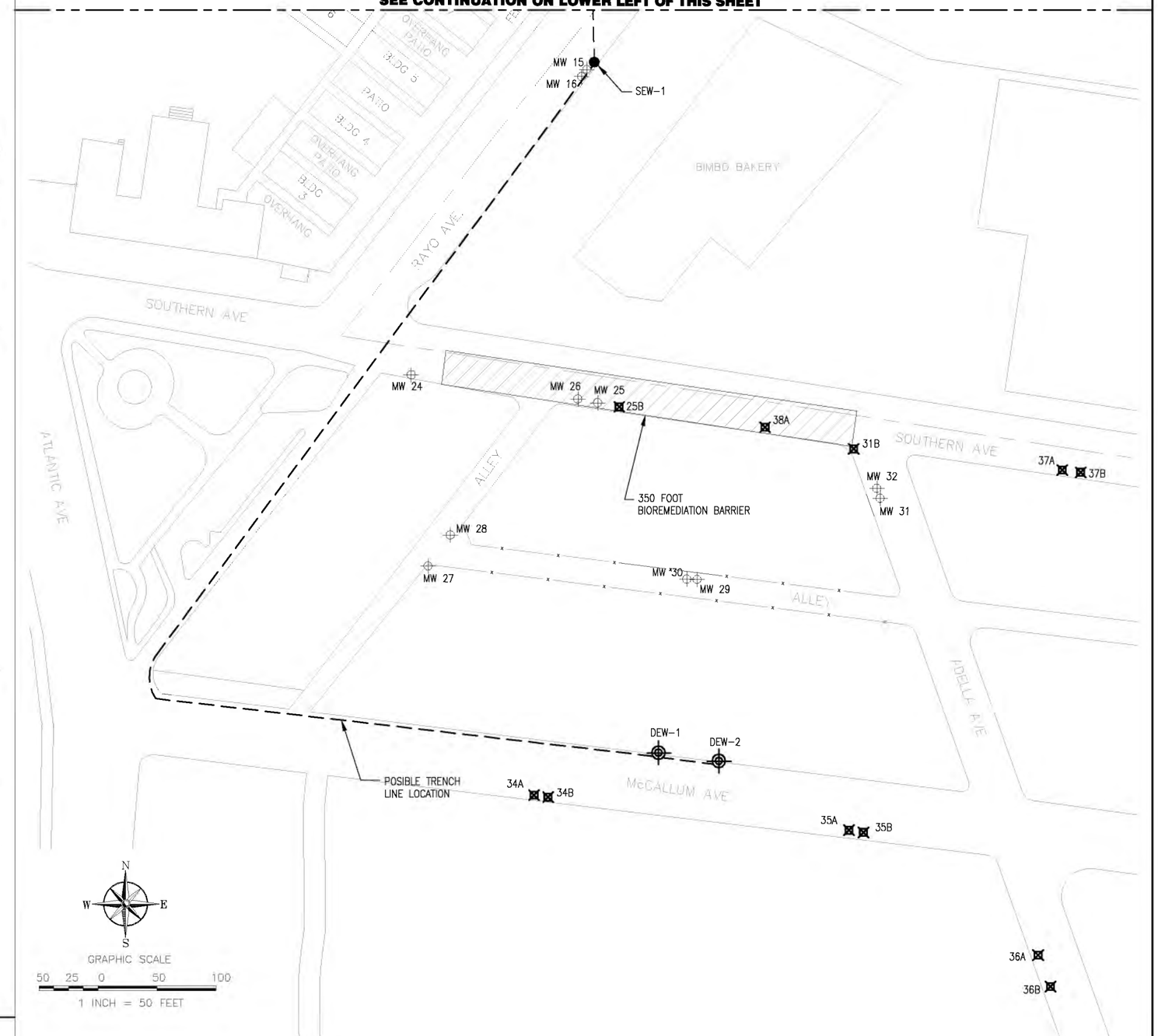

NO.	DATE	DESCRIPTION	NO.	DATE	DESCRIPTION

REVISIONS

DESIGNED BY: M. WIDMANN
DRAWN BY: D. LARSON
CHECKED BY: N/A

URS
2870 Gateway Oaks Drive, Ste. 150
Sacramento, CA 95833-3200
TEL: (916) 679-2000
FAX: (916) 679-2900

REGISTERED PROFESSIONAL ENGINEER EDMOND D. TARTER No. 64825 Exp. ____ CIVIL STATE OF CALIFORNIA

GROUNDWATER REMEDIAL DESIGN OPERABLE UNIT 1
COOPER DRUM COMPANY SUPERFUND SITE
9316 SOUTH ATLANTIC AVE, SOUTH GATE
LOS ANGELES COUNTY , CALIFORNIA 90280

DOWNGRADIENT EXTRACTION WELLS

SCALE:	DATE:	DWG. FILE:	SHEET NO.
1"=50'-0"	8/23/2007	C-5.dwg	C-2

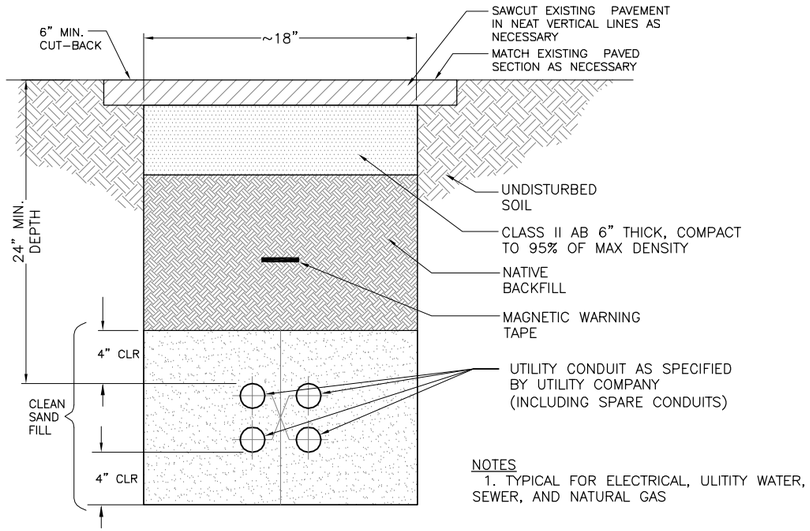

NOTES
1. TYPICAL FOR ELECTRICAL, ULITITY WATER, SEWER, AND NATURAL GAS

1 / C-1 **UTILITY TRENCH DETAIL (TYPICAL)**
(NOT TO SCALE)

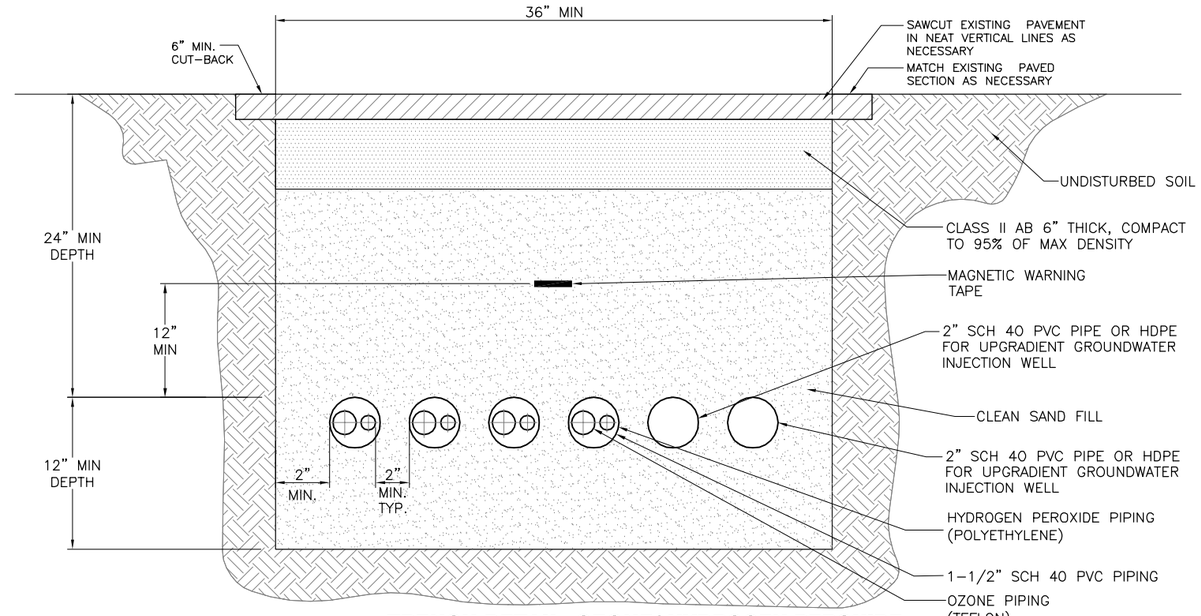

2 / C-1 **TRENCH DETAIL- OZONE/ HYDROGEN PEROXIDE WELLS PIPING (TYPICAL)**
(NOT TO SCALE)

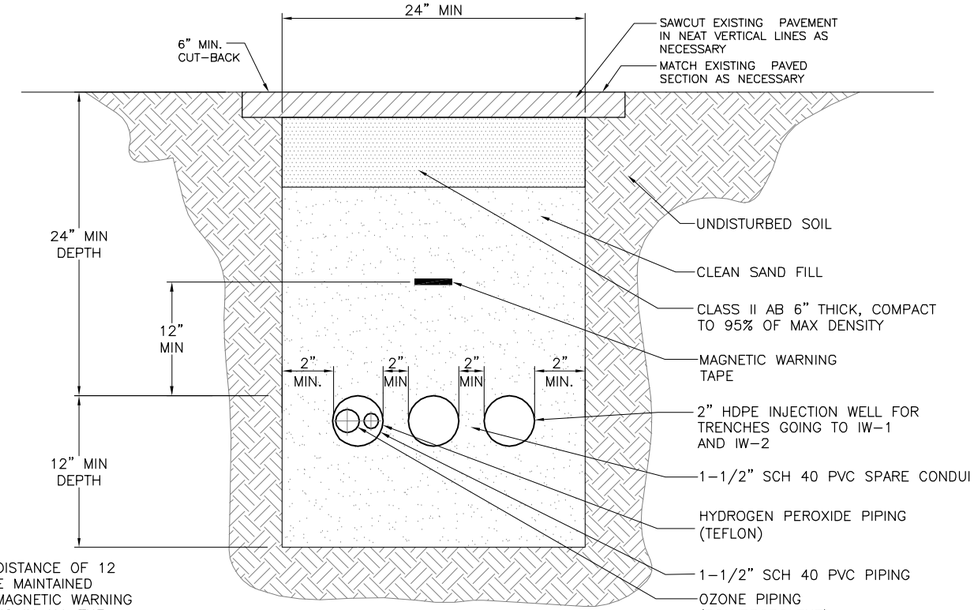

NOTES
1. A MINIMUM DISTANCE OF 12 INCHES WILL BE MAINTAINED BETWEEN THE MAGNETIC WARNING TAPE AND PIPING IN ALL THE TRENCHES SHOWN.

3 / C-1 **TRENCH DETAIL - OZONE/HYDROGEN PEROXIDE WELL PIPING**
(NOT TO SCALE)

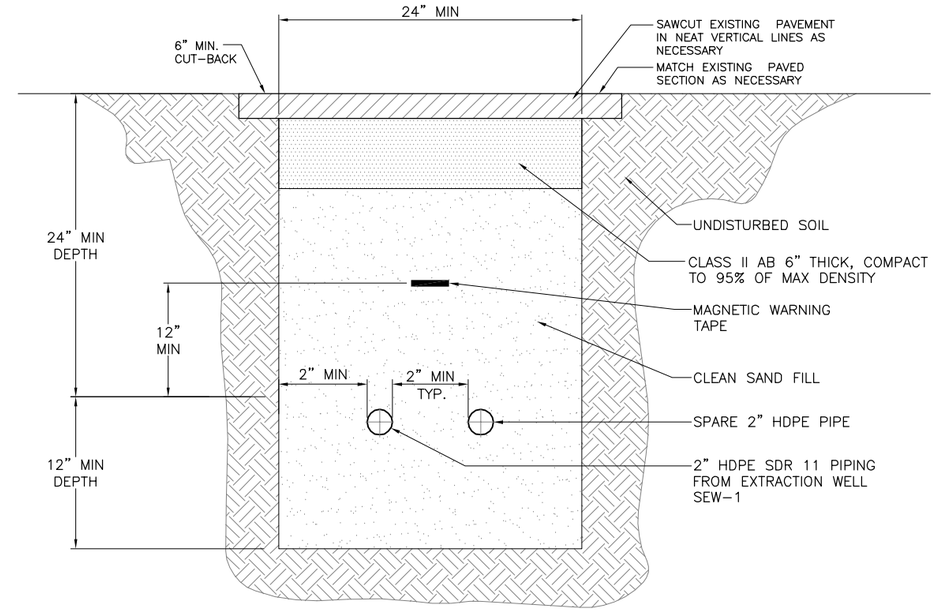

4 / C-1 **TRENCH DETAIL - EXTRACTION WELL PIPING**
(NOT TO SCALE)

NO.	DATE	DESCRIPTION	NO.	DATE	DESCRIPTION

REVISIONS

DESIGNED BY: M. WIDMANN
DRAWN BY: D. LARSON
CHECKED BY: N/A

URS
2870 Gateway Oaks Drive, Ste. 150
Sacramento, CA 95833-3200
TEL: (916) 679-2000
FAX: (916) 679-2900

REGISTERED PROFESSIONAL ENGINEER EDMUND D. TARTRE No. 64825 Exp. ____ CIVIL STATE OF CALIFORNIA

GROUNDWATER REMEDIAL DESIGN OPERABLE UNIT 1
COOPER DRUM COMPANY SUPERFUND SITE
9316 SOUTH ATLANTIC AVE, SOUTH GATE
LOS ANGELES COUNTY , CALIFORNIA 90280

TRENCH DETAILS

SCALE:	DATE:	DWG. FILE:	SHEET NO.
N.T.S.	8/23/2007	C-2.dwg	C-3

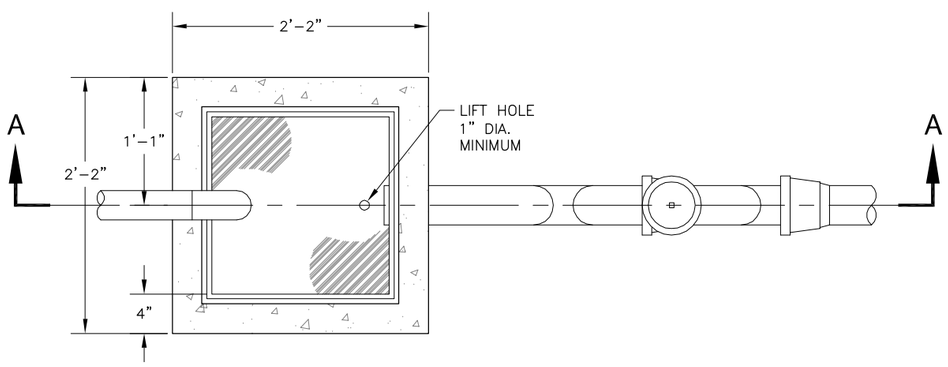

1 C-1 **SAMPLING BOX PLAN**
(NOT TO SCALE)

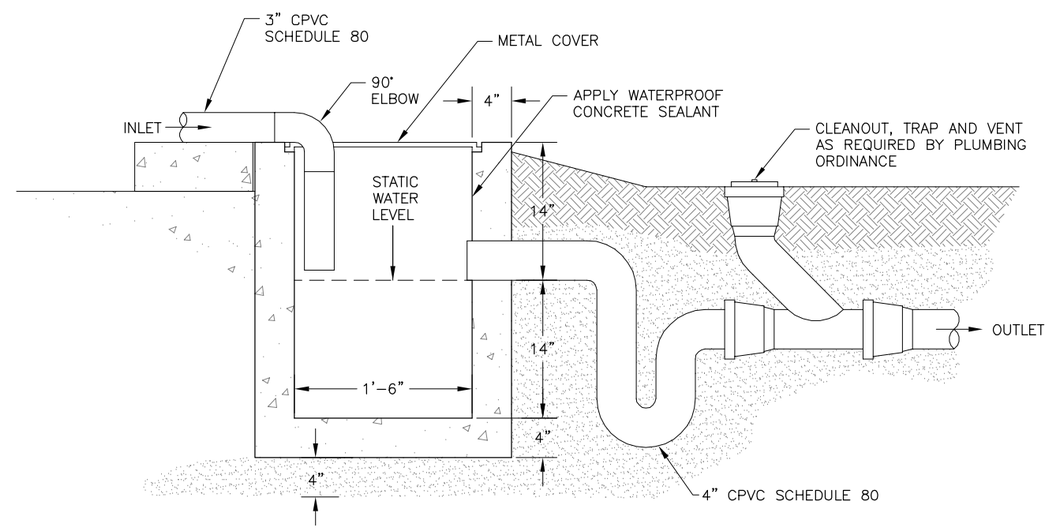

SECTION A-A
(NOT TO SCALE)

NO.	DATE	DESCRIPTION	NO.	DATE	DESCRIPTION

REVISIONS

DESIGNED BY: M. WIDMANN
DRAWN BY: D. LARSON
CHECKED BY: N/A

URS
2870 Gateway Oaks Drive, Ste. 150
Sacramento, CA 95833-3200
TEL: (916) 679-2000
FAX: (916) 679-2900

REGISTERED PROFESSIONAL ENGINEER EDMOND D. MASTER No. 64825 Exp. ____ CIVIL STATE OF CALIFORNIA

GROUNDWATER REMEDIAL DESIGN OPERABLE UNIT 1
COOPER DRUM COMPANY SUPERFUND SITE
9316 SOUTH ATLANTIC AVE, SOUTH GATE
LOS ANGELES COUNTY , CALIFORNIA 90280

SAMPLING BOX DETAIL

SCALE:	DATE:	DWG. FILE:	SHEET NO.
N.T.S.	8/23/2007	C-2a.dwg	C-4

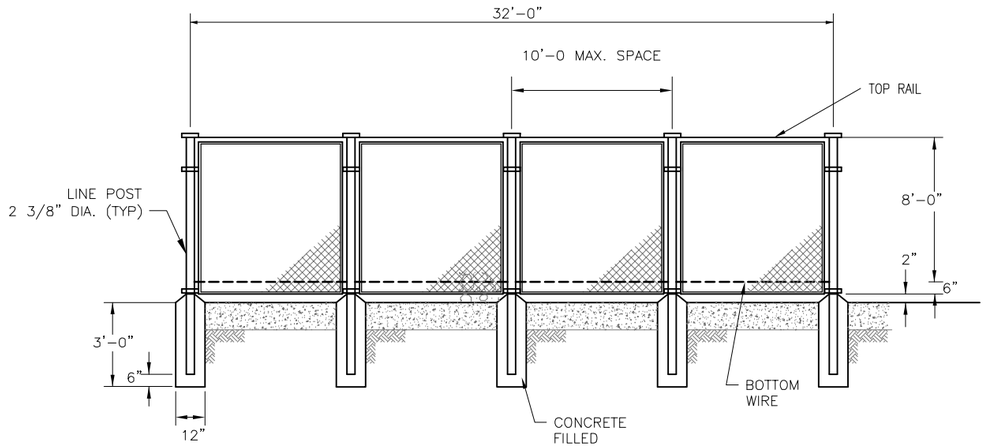

1 S-1 **CHAIN LINK FENCE DETAIL**
NOT TO SCALE

NOTES:

1. PROVIDE POST CAP FOR GATE POSTS, CORNER POSTS AND LINE POSTS.
2. PROVIDE 12'-0" GATE AS SPECIFIED BY PLAN, DETAIL 5.
3. FENCING AND GATE SHALL BE 8 FEET HIGH, 9 GAUGE GALVANIZED, CHAIN-LINK, PERMANENT CONSTRUCTION WITH PRE INSTALLED WHITE VINYL SECURITY SLOTS.
4. LINE POSTS SHALL BE 2" NOMINAL DIA., CORNER, END AND BRACE POSTS SHALL BE 2½" NOMINAL DIA., GATE POST SHALL BE 4" NOMINAL DIA.
5. SEE SHEET S-1 FOR SITE LAYOUT AND FENCE POSITION.

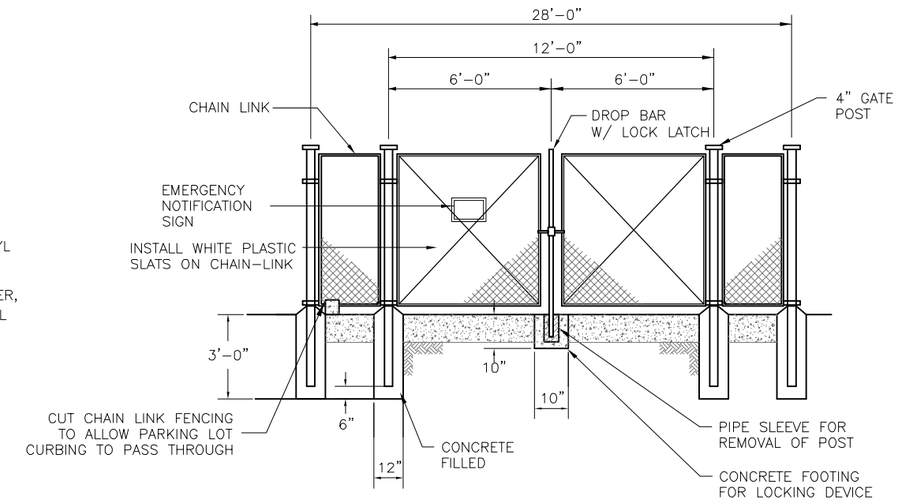

3 S-1 **TYPICAL GATE DETAIL**
NOT TO SCALE

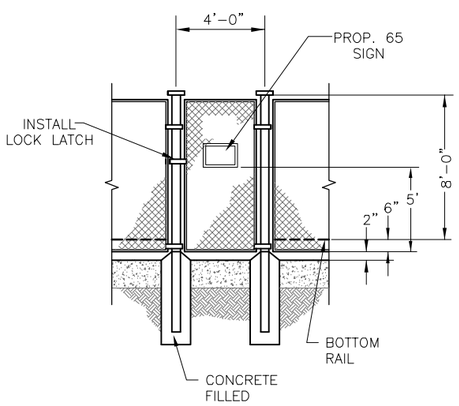

2 S-1 **PERSONNEL GATE**
NOT TO SCALE

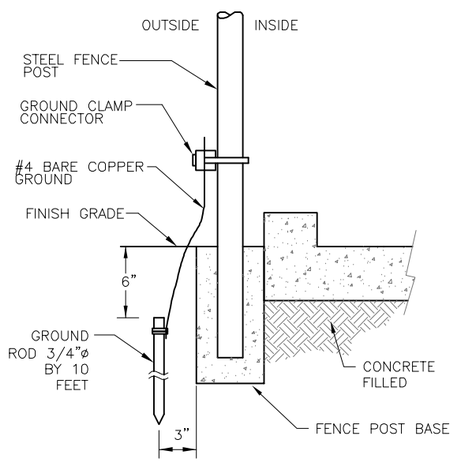

4 S-1 **FENCE GROUNDING DETAIL**
NOT TO SCALE

NOTES:

1. SEE S-1 FOR NUMBER OF GUARD POST TO BE USED.
2. THE EXACT LOCATION OF BOLLARD MAY BE CHANGED BY THE INSPECTOR IN THE FIELD.
3. THE STEEL PIPE ABOVE GROUND SHALL BE PAINTED A MINIMUM OF TWO FIELD COATS OF ZINC CHROMATE PRIMER, AND YELLOW COLOR PAINT COVER.

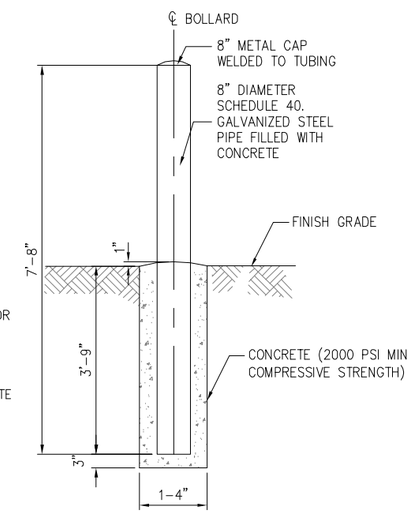

5 S-1 **TYPICAL BOLLARD DETAIL**
NOT TO SCALE

NOTES:

1. SEE S-1 FOR NUMBER OF GUARD POST TO BE USED.
2. THE EXACT LOCATION OF BOLLARD MAY BE CHANGED BY THE INSPECTOR IN THE FIELD.
3. THE STEEL PIPE ABOVE GROUND SHALL BE PAINTED A MINIMUM OF TWO FIELD COATS OF ZINC CHROMATE PRIMER, AND YELLOW COLOR PAINT COVER.

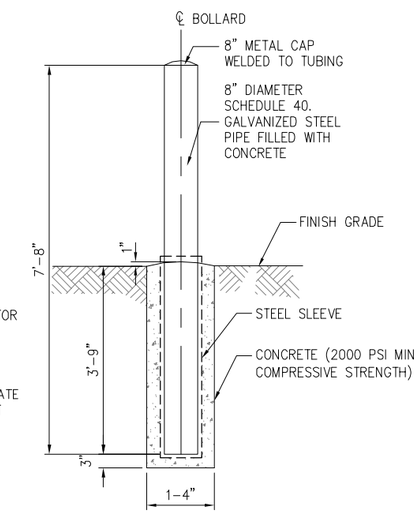

6 S-1 **TYPICAL REMOVABLE BOLLARD DETAIL**
NOT TO SCALE

NO.	DATE	DESCRIPTION	NO.	DATE	DESCRIPTION

REVISIONS

DESIGNED BY: M. WIDMANN
DRAWN BY: D. LARSON
CHECKED BY: N/A

URS
2870 Gateway Oaks Drive, Ste. 150
Sacramento, CA 95833-3200
TEL: (916) 679-2000
FAX: (916) 679-2900

REGISTERED PROFESSIONAL ENGINEER EDMOND D. TARTER No. 64825 Exp. ____ CIVIL STATE OF CALIFORNIA

GROUNDWATER REMEDIAL DESIGN OPERABLE UNIT 1
COOPER DRUM COMPANY SUPERFUND SITE
9316 SOUTH ATLANTIC AVE, SOUTH GATE
LOS ANGELES COUNTY , CALIFORNIA 90280

FENCE DETAILS

SCALE:	DATE:	DWG. FILE:	SHEET NO.
N.T.S.	8/23/2007	C-3.dwg	C-5

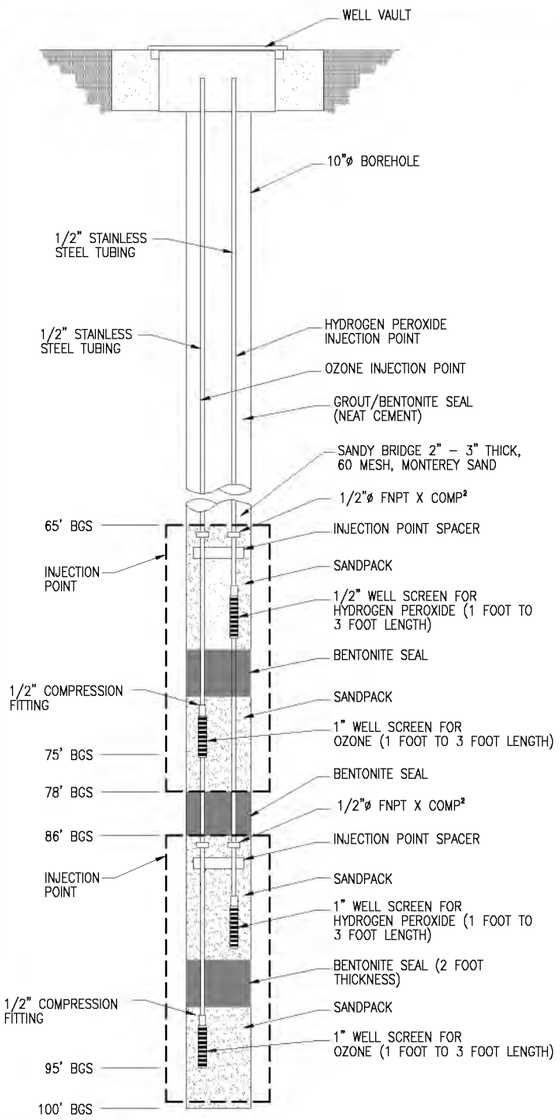

NOTES:

1. SPACERS MUST BE INSTALLED WITHIN GROUT SEAL. SPACERS SHOULD BE APPROX. EVERY FIVE FEET.
2. EACH INJECTION WELL WILL BE SUPPLIED WITH A SS COMPRESSION BY EITHER COMPRESSION OR FNPT FITTING ON EACH POINT AS APPROPRIATE. (APPROXIMATELY 1 FOOT ABOVE TOP OF WELL SCREEN)
3. TUBING/PIPING/FITTING MATERIAL TO BE DETERMINED.
4. DEPTH OF OZONE/PEROXIDE INJECTION INTERVALS IS BETWEEN 70 TO 95 FEET bgs.

1 OZONE/HYDROGEN PEROXIDE INJECTION WELL CONSTRUCTION DETAIL
C-1 | C-2 **(NOT TO SCALE)**

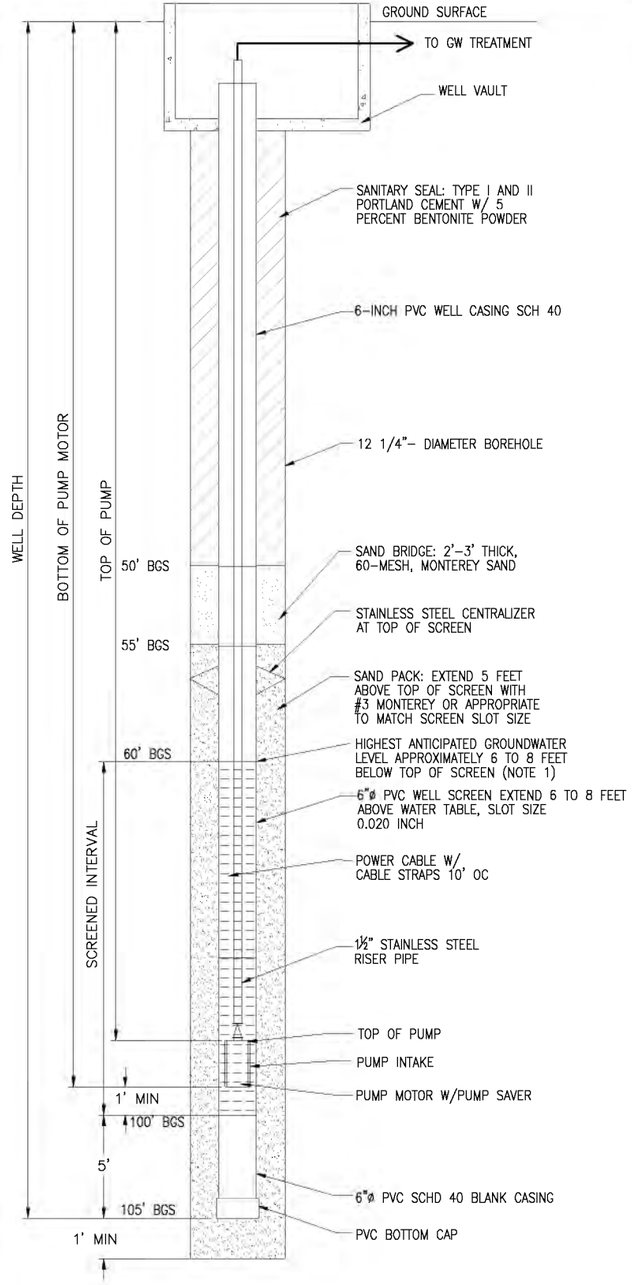

2 SOURCE AREA GROUNDWATER EXTRACTION WELL CONSTRUCTION DETAIL
C-1 | C-2 **(NOT TO SCALE)**

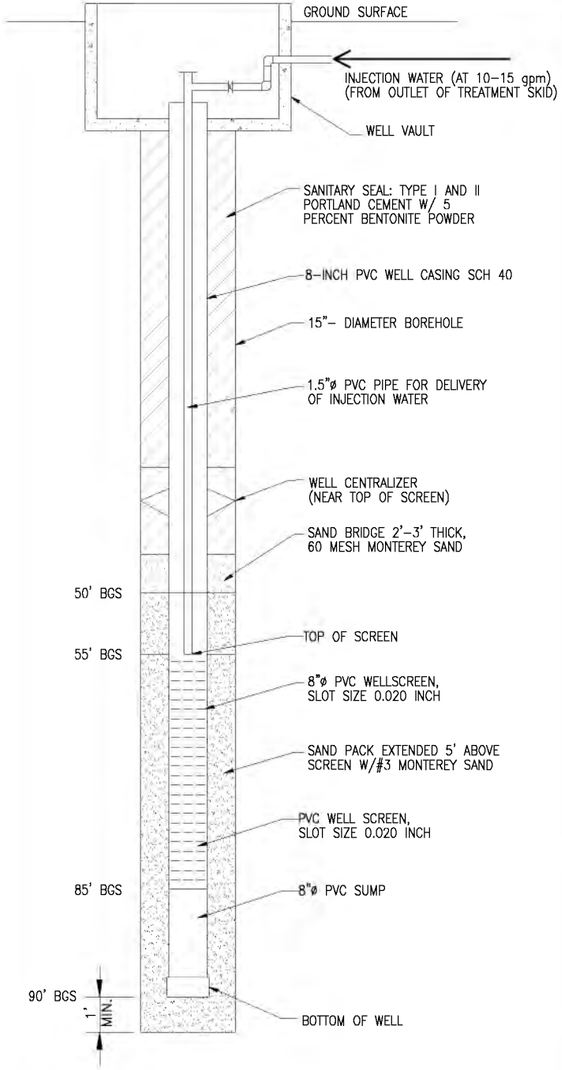

3 GROUNDWATER INJECTION WELL CONSTRUCTION DETAIL
C-1 | C-2 **(NOT TO SCALE)**

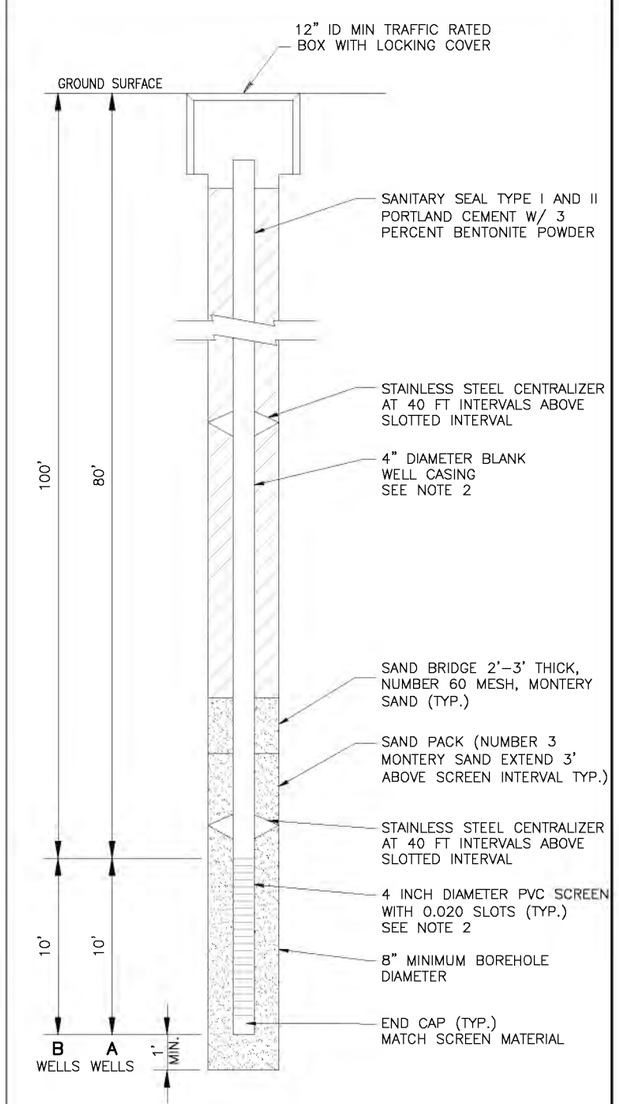

NOTES:

1. ACTUAL CONSTRUCTION MAY VARY DEPENDING ON TOTAL DEPTH OF WELL.
2. CASING AND SCREEN MATERIAL MAY BE SCHEDULE 40 LOW CARBON STEEL OR SCHEDULE 40 PVC.
3. DIELECTRIC INSULATING MATERIAL SHALL BE PROVIDED BEFORE THE LCS CASING AND SS BLANK CASING.

4 MONITORING WELL DETAIL (A AND B ZONES)
C-1 | C-2 **(NOT TO SCALE)**

NO.	DATE	DESCRIPTION	NO.	DATE	DESCRIPTION

REVISIONS

DESIGNED BY: M. WIDMANN
DRAWN BY: D.LARSON
CHECKED BY: N/A

URS
2870 Gateway Oaks Drive, Sta. 150
Sacramento, CA 95833-3200
TEL: (916) 679-2000
FAX: (916) 679-2900

REGISTERED PROFESSIONAL ENGINEER EDMUND D. TARPEY No. 64825 Exp. ____ CIVIL STATE OF CALIFORNIA

GROUNDWATER REMEDIAL DESIGN OPERABLE UNIT 1
COOPER DRUM COMPANY SUPERFUND SITE
9316 SOUTH ATLANTIC AVE, SOUTH GATE
LOS ANGELES COUNTY , CALIFORNIA 90280

WELL CONSTRUCTION DETAIL

SCALE:	DATE:	DWG. FILE:	SHEET NO.
N.T.S.	8/23/2007	C-4.dwg	C-6

STRUCTURAL ABBREVIATIONS

@	AT	HORZ	HORIZONTAL
ABV	ABOVE	HT	HEIGHT
AB	ANCHOR BOLTS	HB	HIGH STRENGTH BOLT (A325)
ACI	AMERICAN CONCRETE INSTITUTE	ICBO	INTERNATIONAL CONFERENCE OF BUILDING OFFICIALS
ADDNL	ADDITIONAL		
AFF	ABOVE FINISH FLOOR	ID	INSIDE DIAMETER
AGG	AGGREGATE	IN (")	INCH
AISC	AMERICAN INSTITUTE FOR STEEL CONSTRUCTION	INTR	INTERIOR
		INFO	INFORMATION
ALT	ALTERNATE	JT	JOINT
APPROX	APPROXIMATE	LL	LIVE LOAD
ARCH	ARCHITECT/ ARCHITECTURAL	LGTH	LENGTH
ASTM	AMERICAN SOCIETY FOR TESTING AND MATERIALS	LONG	LONGITUDINAL
		LT WT	LIGHT WEIGHT
AWS	AMERICAN WELDING SOCIETY	LWC	LIGHT WEIGHT CONCRETE
BLW	BELOW	MAX	MAXIMUM
BLDG	BUILDING BLDG	MB	MACHINE BOLT
BLK	BLOCK BLOCKING BLKG	MCJ	MASONRY CONTROL JOINT
BOC	BOTTOM OF CONCRETE	MECH	MECHANICAL
BOF	BOTTOM OF FOOTING	MFR	MANUFACTURER
BOTT	BOTTOM	MIN	MINIMUM
BRG	BEARING	MISC	MISCELLANEOUS MISC
BTW	BETWEEN	MTL	METAL
CBC	CALIFORNIA BUILDING CODE	NIC	NOT IN CONTRACT
CC	CENTER TO CENTER	NO (#)	NUMBER OR POUNDS
CE	CIVIL ENGINEER	NOM	NOMINAL
CIP	CAST IN PLACE	NSG	NON SHRINK GROUT
CJ	CONSTRUCTION	NTS	NOT TO SCALE NTS
CMU	MCONCRETE MASONRY UNIT	OC	CENTER
CONC	CONCRETE	OD	OUTSIDE DIAMETER
CONN	CONNECTION	OPG	OPENING
CONT	CONTINUOUS	PC	PIECE
CTR	CENTER CTR CENTERED	PCC	PRECAST CONCRETE
DIA (ø)	DIAMETER	PERP	PERPENDICULAR
DL	DEAD LOAD	PSI	POUNDS PER SQUARE INCH
DN	DOWN	PT	POINT
DSA	DIVIDION OF STATE ARCHITECTS	R	RADIUS
DTL	DETAIL	REINF	REINFORCING
DWG	DRAWING	REQ	REQUIRED
EA	EACH	SAD	SEE ARCHITECTURAL DRAWINGS
EF	EACH FACE	SCHED	SCHEDULE
EJ	EXPANSION JOINT	SE	STRUCTURAL ENGINEER
ELV	ELEVATION ELEV	SEIS	SEISMIC
EOS	EDGE OF SLAB	JT	JOINT
EOR	ENGINEER OF RECORD	SHRWL	SHEARWALL
EQ (=)	EQUAL	SIM	SIMILAR
EW EF	EACH WAY EACH FACE	SJ	SHRINKAGE JOINT
EW	EACH WAY	SOG	SLAB ON GRADE
EXTR	EXTERIOR	SPEC	SPECIFICATION
f'c	MINIMUM ULTIMATE COMPRESSIVE STRENGTH OF CONCRETE	SQ	SQUARE
		STD	STANDARD
FD	FLOOR DRAIN	STL	STEEL
FF	FINISH FLOOR	STRUC	STRUCTURAL
FFE	FINISH FLOOR ELEVATION	SYM	SYMMETRICAL
FG	FINISH GRADE	T24	TITLE 24 CALIFORNIA CODE
f'm	MINIMUM ULTIMATE COMPRESSIVE STRENGTH OF MASONRY	THK	THICK/THICKNESS
		TOC	TOP OF CONCRETE TOC
FNDN	FOUNDATION	TOF	TOP OF FOOTING/TOP OF FRAMING
FOC	FACE OF CONCRETE FOC		
FOM	FACE OF MASONRY	T.O. SLAB	TOP OF SLAB
FRMG	FRAMING FRMG	TOS	TOP OF STEEL
FT (')	FOOT/FEET	TOT	TOTAL
FTG	FOOTING	TOW	TOP OF WALL
Fy	SPECIFIED YIELD STRENGTH OF REIFORCING, PSI OR SPECIFIED MINIMUM	TRAN	TRANSVERSE
		TYP	TYPICAL
		T&B	TOP AND BOTTOM
KSI	YIELD STRESS OF STEEL	UBC	UNIFORM BUILDING CODE
GRD	GRADE	UNO	UNLESS NOTED OTHERWISE
GT	GROUT	VERT	VERTICAL
HC	HANDICAP	VIF	VERIFIY IN FIELD
HD	HOLD DOWN	w/	WITH
HDR	HEADER	WT	WEIGHT
HK	HOOK	WWF	WELDED WIRE FABRIC

INSPECTION NOTES:

1. GENERAL: IN ADDITION TO THE INSPECTIONS REQUIRED BY SECTION 108 OF THE 2006 IBC, THE GOVERNMENT SHALL EMPLOY AN IBC APPROVED SPECIAL INSPECTOR TO PERFORM SPECIAL INSPECTIONS AND TESTS AS INDICATED IN THE SCHEDULE BELOW.
2. INSPECTORS: ALL TESTS AND INSPECTIONS SHALL BE PERFORMED BY AN INDEPENDENT INSPECTION AGENCY WHICH IS IN THE EMPLOYMENT OF THE GOVERNMENT.
3. ALL SPECIAL INSPECTION AND TESTING AGENCIES SHALL BE QUALIFIED PER ASTM E329 AND APPROVED BY THE GOVERNMENT.
4. PROVIDE INSPECTION REPORTS TO BUILDING DEPARTMENT, GOVERNMENT, ARCHITECT AND ENGINEER WITHIN TWO WEEKS OF PERFORMANCE INSPECTION OR TEST.
5. REFER TO CHAPTER 17 OF THE CODE FOR OTHER REQUIRED SPECIAL INSPECTIONS
6. IT IS THE CONTRACTOR'S SOLE RESPONSIBILITY TO SEE THAT THE TESTS AND INSPECTIONS ARE PERFORMED. JOB SITE VISITS BY THE STRUCTURAL ENGINEER DO NOT CONSTITUTE AND ARE NOT A SUBSTITUTE FOR INSPECTIONS.
7. WHERE THE CONTRACTOR CHOOSES TO USE OPTIONAL OR ALTERNATIVE MEANS OF FASTENING OR ANCHORING MATERIALS AS SHOWN ON THE PLANS AND DETAILS AND REQUIRES SPECIAL FIELD INSPECTION, SUCH AS FIELD WELDING, ADHESIVE OR EXPANSION ANCHORS, ETC. ALL ADDITIONAL SPECIAL INSPECTION AND TESTING COSTS SHALL BE PAID FOR BY THE GOVERNMENT AND REIMBURSED BY THE CONTRACTOR.

FOUNDATIONS:

1. REFER TO RECOMMENDATIONS IN SOILS REPORT, FILE NO. __N/A__ BY __N/A__ DATED __N/A_____. ALLOWABLE SOIL BEARING PRESSURE FOR FOUNDATION IS 1,500 PSF (DL + LL) AND 2,000 PSF (DL + LL + SEISMIC OR WIND).
   1.1 SOIL CLASSIFICATION IS CL FOR TRACY SITE.
2. ALL SITEWORK AND GRADING SHALL BE DONE IN COMPLIANCE WITH THE SOILS REPORT AND SPECIFICATIONS OR ENGINEER'S RECOMMENDATIONS.
3. SOILS ENGINEER SHALL VERIFY CONDITION AND/OR ADEQUACY OF ALL FOUNDATION EXCAVATIONS PRIOR TO PLACEMENT OF CONCRETE.
4. IT SHALL BE THE RESPONSIBILITY OF THE CONTRACTOR TO SHORE AND BRACE ALL EXCAVATIONS AS REQUIRED.
5. ALL FOUNDATIONS ARE SHOWN AND DIMENSIONED AS BEING FORMED. FOUNDATIONS MAY BE PLACED IN NEAT EXCAVATIONS PROVIDED FOOTINGS ARE INCREASED 2" IN WIDTH, SEE TYPICAL EXCAVATION DETAIL.
6. EXCAVATIONS SHALL BE CLEANED OF ALL DEBRIS AND LOOSE SOIL. STANDING WATER SHALL BE REMOVED PRIOR TO CONCRETE PLACEMENT.
7. FOUNDATION DEPTHS INDICATED ON PLANS ARE MINIMUMS. ACTUAL DEPTHS ARE TO BE CONFIRMED BY SOILS ENGINEER ON THE JOB SITE.
8. BOTTOMS OF ALL FOUNDATIONS SHALL BE LEVEL. CHANGES IN BOTTOM OF FOUNDATION ELEVATION SHALL BE MADE ACCORDING TO STEPPED FOOTING DETAILS.
9. FOOTINGS SHALL BE CENTERED UNDER WALLS AND/OR COLUMNS UNLESS OTHERWISE INDICATED ON DRAWINGS.
10. CONTRACTOR SHALL CHECK FOOTING FORMS TO VERIFY THAT THEY ARE SQUARE & PLUMB. THE CONTRACTOR SHALL ALSO VERIFY THAT ALL INSERTS & EMBEDS ARE IN THEIR CORRECT LOCATION & ORIENTATION PRIOR TO PLACING CONCRETE.
11. NOTIFY THE STRUCTURAL ENGINEER 48 HOURS IN ADVANCE OF PLACING CONCRETE.

1. CONTRACTOR SHALL BE RESPONSIBLE FOR ARRANGING SPECIAL INSPECTION.

DUTIES & RESPONSIBILITIES OF THE INSPECTOR ARE COVERED IN SECTION 1704.1 OF IBC.

	ITEM	CONTINUOUS INSPECTION	PERIODIC INSPECTION	REMARKS
CONCRETE	SLAB ON GRADE (f'c = 4000 PSI)	— —	YES	PRIOR TO POURING OF CONCRETE & DURING THE TAKING OF TEST SPECIMENS
CONCRETE	WALL (f'c = 4000 PSI)	— —	YES	PRIOR TO POURING OF CONCRETE & DURING THE TAKING OF TEST SPECIMENS
CONCRETE	GRADE BEAM AND FOUNDATION (f'c = 3000 PSI)	— —	YES	PRIOR TO POURING OF CONCRETE & DURING THE TAKING OF TEST SPECIMENS & PLACING OF REINF'D CONCRETE
CONCRETE	STRUCTURAL CONCRETE CONC. ON METAL DECK (f'c = 3000 PSI) (SECTION 1704.4)	YES	— —	PRIOR TO POURING OF CONCRETE DURING THE TAKING OF TEST SPECIMENS CHECK REINFORCEMENT LOCATION
	BOLTS IN CONCRETE (SECTION 1704.4)	— —	YES	PRIOR TO AND DURING THE PLACEMENT OF CONCRETE AROUND BOLTS
FIELD WELDING	STRUCTURAL STEEL (ELECTRODE = E70XX)	YES	— —	DURING THE WELDING
FIELD WELDING	REINFORCING STEEL (ELECTRODE = E90XX) (SECTION 1704.4)	YES	— —	DURING THE WELDING
FIELD WELDING	METAL ROOF DECK WELDING	— —	YES	DURING THE WELDING
	STRUCTURAL WELDING (INCLUDING HSA WELDING) (SECTION 1704.3)	YES	— —	EXCEPT FOR WELDING PERFORMED IN THE SHOP OF AN APPROVED FABRICATOR
	REINFORCING STEEL (SECTION 1704.4)	— —	YES	PRIOR TO COVER UP
	HIGH STRENGTH BOLTS (A325 & A490) (SECTION 1704.3)	— —	YES	DURING INSTALLATION OF BOLTS & TIGHTENING
	SPRAY APPLIED FIREPROOFING (SECTION 1704.11)	— —	YES	DURING THE SPRAYING

2. A CERTIFICATE OF SATISFACTORY COMPLETION OF WORK REQUIRING SPECIAL INSPECTION MUST BE COMPLETED AND SUBMITTED TO THE FIELD INSPECTION DIVISION.
3. AN APPLICATION FOR OFF-SITE FABRICATION MUST BE SUBMITTED TO THE FIELD INSPECTION DIVISION FOR APPROVAL PRIOR TO FABRICATION.
4. A CERTIFICATE OF COMPLIANCE FOR OFF-SITE FABRICATION MUST BE COMPLETED AND SUBMITTED TO THE FIELD INSPECTION DIVISION PRIOR TO ERECTION OF PREFABRICATED COMPONENTS.

DESIGN CRITERIA (2006 IBC & UFC 1-200-01):

2.0 REFERENCED STRUCTURAL STANDARDS IN THE 2006 IBC
- 2.01 DESIGN LOADS.....ASCE 7-05
- 2.02 CONCRETE.....ACI 318-05
- 2.03 MASONRY.....ACI 530-05/ASCE 5-05/TMS 402-05
- 2.04 STEEL (ASD) .....AISC 360-05
- 2.05 STEEL (SEISMIC).....AISC 341-05
- 2.06 STEEL (COLD-FORMED LGS).....NAS 01 INCL. 2004 SUPPLEMENT
  - 2.06.1 GENERAL.....AISI GENERAL-04
  - 2.06.2 HEADER.....AISI HEADER-04
  - 2.06.3 TRUSS.....AISI TRUSS-04
  - 2.06.4 WALL STUD.....AISI WSD-04
  - 2.06.5 LATERAL.....AISI LATERAL-04
- 2.07 WOOD (ASD).....AF&PA NDS-05

1. BUILDING CODE: 2006 IBC & UFC 1-200-01
2. GRAVITY LOADS:
   (DL):
   - ROOF 20 psf
   - EXTERIOR WALLS 15 psf
   - INTERIOR WALLS 10 psf

   (LL):
   - ROOF (REDUCIBLE): 20 psf
   - GROUND SNOW, Po (BASE): 0 psf
3. WIND LOADS:
   - BASIC WIND SPEED = 85 MPH (3 SECOND GUST)
   - EXPOSURE = C
   - IMPORTANCE = 1.0
4. Earthquake:
   - Ss = 0.61
   - S1 = 0.18
   - SEISMIC USE GROUP = I
   - IMPORTANCE FACTOR = 1.0
   - SITE CLASS = D
   - SEISMIC DESIGN CATEGORY = D
   - RESPONSE COEEFICIENT, R = 5.5
   - OVERSTRENGTH FACTOR, Wo = 2.5

CONCRETE NOTES

1. THE EXTENT OF THE CONCRETE WORK IS SHOWN ON THE DRAWINGS.
2. SUBMITTALS ARE REQUIRED FOR REINFORCEMENT, CONCRETE MIXES, ADMIXTURES, CURING COMPOUNDS AND ANY OTHER ITEM AS REQUESTED BY THE C.Q.C.
3. CONCRETE TESTING SHALL BE PERFORMED PER ACI REQUIREMENTS:
   - 3.1) A MINIMUM OF ONE SAMPLE A DAY WITH NO LESS THAN 5 SAMPLES FOR A GIVEN CLASS OF CONCRETE, TAKEN FROM 5 RANDOMLY SELECTED BATCHES, OR FROM EACH BATCH IF LESS THAN 5 BATCHES ARE USED.
   - 3.2) A MINIMUM OF ONE SAMPLE PER 150 CUBIC YARDS.
   - 3.3) A MINIMUM OF ONE SAMPLE FOR EACH 5,000 SQUARE FEET OF SLAB OR WALL.
   - 3.4) IF LESS THAN 50 CUBIC YARDS OF A GIVEN CLASS OF CONCRETE IS NEEDED, THE NEED FOR STRENGTH TESTS MAY BE WAIVED WITH THE APPROVAL OF THE ENGINEER.
4. MATERIALS SHALL COMPLY WITH ACI 318-02. PORTLAND CEMENT SHALL BE PER ASTM C 150, TYPE I WITH NORMAL WEIGHT AGGREGATE PER ASTM C33. A 5% (±1.5) AIR ENTRAINING AGENT MAY BE USED IN ALL EXTERIOR CONCRETE. THIS AGENT SHALL BE PER ASTM C 260.
5. COMPRESSIVE STRENGTH OF CONCRETE (28 DAY STRENGTH) AS FOLLOWS:
   - 5.1) FOOTINGS: 3,000 PSI
   - 5.2) SLAB-ON-GRADE: 4,000 PSI
   - 5.3) LEAN CONC. 2,500 PSI
6. PROPORTION ALL MIX DESIGNS TO HAVE A MAXIMUM SLUMP OF 4 INCHES UNLESS SPECIFICALLY APPROVED BY THE ENGINEER.
7. THE MAXIMUM WATER/CEMENT RATIO SHALL BE LIMITED TO 0.45 UNLESS SPECIFICALLY APPROVED BY THE ENGINEER.
8. REINFORCEMENT STEEL: GRADE 60 FY = 60,000 PSI MIN. (ASTM A 615) WELDED WIRE FABRIC SHALL CONFORM TO ASTM A 185
9. ANCHOR BOLTS SHALL BE F1554-36 MATERIAL AND SHALL HAVE A MINIMUM EMBEDMENT OF THE GREATER OF 7 INCHES OR 12 DIAMETERS INTO THE CONCRETE UNLESS CALLED FOR OTHERWISE ON THE DRAWINGS. ALL THREADS SHALL BE CUT AND NOT ROLLED. THE EMBEDDED END SHALL CONSIST OF A HEAVY HEX NUT OR OTHER MECHANICAL ANCHOR. HOOK BOLTS ARE NOT ACCEPTABLE. ALL ANCHOR BOLTS MUST BE CLEANED OF OIL, RUST AND OTHER DELETERIOUS COATINGS PRIOR TO PLACEMENT. SET ALL EMBEDMENTS BY MEANS OF A TEMPLATE WHERE POSSIBLE.
10. DETAILING: ALL REINFORCING SHALL BE DETAILED, BOLSTERED AND SUPPORTED WITH ACI STANDARDS #315, "MANUAL OF STANDARD PRACTICE FOR DETAILING REINFORCING CONCRETE STRUCTURES." NO LAP SPLICES SHALL BE USED IN VERTICAL PIER STEEL. STAGGER ALL SPLICES OF ALL HORIZONTAL REINFORCING.
11. CARE SHALL BE TAKEN TO PREVENT CURLING IN THE SLAB DURING CURING. BURLAP CURING OR OTHER MOISTURE CURE METHOD AS DESCRIBED IN SPECS SHALL BE UTILIZED.
12. PROVIDE CORNER REINFORCING TO MATCH CONTINOUS REINFORCMENT SIZE AND QUANITY AT INTERSECTIONS AND CORNERS OF WALLS AND FOOTINGS.
13. WALL, PIER AND COLUMN DOWELS SHALL BE THE SAME SIZE AND SPACING AS WALL, PIER AND COLUMN REINFORCING, UNLESS NOTED OTHERWISE.

EXECUTION:

14. THE CONCRETE FOUNDATIONS AND SLAB-ON-GRADE MUST BE PLACED ON ENGINEERED FILL, REFER TO SOILS REPORT OR ENGINEER'S RECOMMENDATIONS AS APPROPRIATE.
15. PLACEMENT OF CONCRETE SHALL BE PER ACI 318-05. CONCRETE SHALL BE DEPOSITED AS NEAR TO ITS FINAL POSITION AS POSSIBLE. ALL CONCRETE SHALL BE THOROUGHLY CONSOLIDATED AROUND REINFORCEMENT AND EMBEDDED ITEMS. ALL REINFORCING STEEL MUST BE FREE FROM DIRT, RUST AND OTHER DELETERIOUS MATERIAL PRIOR TO PLACEMENT. DOWELS, ANCHOR BOLTS, INSERTS, ETC. SHALL BE SECURELY TIED IN PLACE PRIOR TO POURING OF CONCRETE OR GROUT.
16. MINIMUM CONCRETE COVERS AS FOLLOWS:
    - 16.1) CAST AGAINST AND PERMANENTLY EXPOSED TO EARTH: CONCRETE PERMANENTLY EXPOSED TO EARTH OR WEATHER: 3"
    - 16.2) NO. 5 BAR OR SMALLER: 1-1/2"
    - 16.3) NO. 6 BAR OR LARGER: CONCRETE NOT EXPOSED TO WEATHER OR IN CONTACT 2"
    - 16.4) WITH GROUND (TO NO. 11 BARS): 3/4"
17. PROVIDE CONTINUOUS 2" X 4" KEY-WAY IN ALL HORIZONTAL AND VERTICAL CONSTRUCTION JOINTS. OTHERWISE, ROUGHEN AND CLEAN ALL CONSTRUCTION JOINTS.
18. NO PIPES, DUCTS OR CONDUIT SHALL BE PLACED IN CONCRETE UNLESS SPECIFICALLY DETAILED OR NOTED.
19. NO ADMIXTURES SHALL BE USED WITHOUT THE APPROVAL OF THE ENGINEER. NO CALCIUM CHLORIDE SHALL BE USED.
20. PROVIDE CURING AND SEALING COMPOUND TO ALL EXPOSED INTERIOR SLABS AND TO ALL EXTERIOR SLABS, WALKS AND CURBS AS SOON AS FINAL FINISHING IS COMPLETE.
21. NOTIFY THE EOR AND THE BUILDING OFFICIAL WHEN REQ'D AT LEAST 48 HOURS PRIOR TO PLACING CONCRETE.

GENERAL:

1. ALL DESIGN AND CONSTRUCTION SHALL COMPLY WITH THE 2006 INTERNATIONAL BUILDING CODE AND ALL APPLICABLE LOCAL ORDINANCES.

GENERAL NOTES:

1. ALL DRAWINGS ARE CONSIDERED TO BE A PART OF THE CONTRACT DOCUMENTS. THE CONTRACTOR SHALL BE RESPONSIBLE FOR THE REVIEW AND COORDINATION OF ALL DRAWINGS AND SPECIFICATIONS PRIOR TO THE START OF CONSTRUCTION. ANY DISCREPANCIES SHALL BE BROUGHT TO THE ATTENTION OF THE ENGINEER PRIOR TO THE START OF CONSTRUCTION SO THAT A CLARIFICATION CAN BE ISSUED. ANY WORK PERFORMED IN CONFLICT WITH THE CONTRACT DOCUMENTS OR CODE REQUIREMENTS SHALL BE CORRECTED BY THE CONTRACTOR AT CONTRACTOR'S EXPENSE AND AT NO EXPENSE TO THE GOVERNMENT.
2. TYPICAL NOTES AND DETAILS SHALL APPLY UNLESS OTHERWISE SHOWN OR NOTED ON DRAWINGS.
3. DETAILS OF CONSTRUCTION NOT FULLY SHOWN SHALL BE OF THE SAME NATURE AS SHOWN FOR SIMILAR CONDITION.
4. ALL WORK SHALL CONFORM TO THE MINIMUM STANDARDS OF THE FOLLOWING CODES: 2006 INTERNATIONAL BUILDING CODE (IBC), AND LATEST REVISIONS REFERRED TO HERE AS "THE CODE", AND OTHER REGULATING AGENCIES WHICH HAVE AUTHORITY OVER ANY PORTION OF THE WORK, INCLUDING THE STATE OF CALIFORNIA DIVISION OF INDUSTRIAL SAFETY, AND THOSE CODES AND STANDARDS LISTED IN THESE NOTES AND SPECIFICATIONS.
5. NOTES AND DETAILS ON DRAWINGS SHALL TAKE PRECEDENCE OVER GENERAL NOTES AND TYPICAL DETAILS. WHERE NO DETAILS ARE GIVEN, CONSTRUCTION SHALL BE AS SHOWN FOR SIMILAR WORK. IF CONFLICTS OCCUR BETWEEN DRAWINGS AND SPECIFICATIONS, THE MORE RESTRICTIVE REQUIREMENT SHALL GOVERN. STRUCTURAL ENGINEER SHALL BE NOTIFIED OF CONFLICTS AND THAT PORTION OF WORK SHOULD NOT PROCEED UNTIL THE CONFLICT IS RESOLVED.
6. SEE ARCHITECTURAL DRAWINGS FOR THE FOLLOWING:
   - 6.1. SIZE AND LOCATION OF ALL DOOR AND WINDOW OPENINGS.
   - 6.2. SIZE AND LOCATIONS OF ALL INTERIOR AND EXTERIOR NON-BEARING PARTITIONS.
   - 6.3. SIZE AND LOCATION OF ALL CONCRETE CURBS, EQUIPMENT PADS, PITS, FLOOR DRAINS, SLOPES, DEPRESSED AREAS, CHANGE IN LEVEL, CHAMFERS, GROOVES, INSERTS, ETC.
   - 6.4. SIZE AND LOCATION OF ALL FLOOR AND ROOF OPENINGS EXCEPT AS SHOWN.
   - 6.5. FLOOR AND ROOF FINISHES.
   - 6.6. DIMENSIONS NOT SHOWN ON STRUCTURAL DRAWINGS.
7. SEE MECHANICAL, PLUMBING AND ELECTRICAL DRAWINGS AND SPECIFICATIONS FOR THE FOLLOWING:
   - 7.1. PIPE RUNS, SLEEVES, HANGERS, TRENCHES, WALL AND SLAB OPENINGS, ETC. EXCEPT AS SHOWN OR NOTED.
   - 7.2. ELECTRICAL CONDUIT RUNS, BOXES, OUTLETS IN WALL OR SLABS.
   - 7.3. CONCRETE INSERTS FOR ELECTRICAL, MECHANICAL OR PLUMBING FIXTURES.
   - 7.4. SIZE AND LOCATION OF MACHINE OR EQUIPMENT BASES AND ANCHOR BOLTS FOR MOTOR MOUNTS.
8. THE CONTRACT STRUCTURAL DRAWINGS AND SPECIFICATIONS REPRESENT THE FINISHED STRUCTURE. THEY DO NOT INDICATE THE METHOD OF CONSTRUCTION.
9. ASTM SPECIFICATIONS ON THE DRAWINGS SHALL BE OF THE LATEST REVISION.
10. CONSTRUCTION MATERIAL SHALL BE SPREAD OUT IF PLACED ON FRAMED ROOF OR FLOOR. LOAD SHALL NOT EXCEED DESIGN LIVE LOAD PER SQUARE FOOT. PROVIDE ADEQUATE SHORING AND/OR BRACING WHERE STRUCTURE HAS NOT ATTAINED DESIGN STRENGTH.
11. HEAVY EQUIPMENT, CRANES AND MATERIAL STOCKPILES SHALL NOT BE LOCATED ON OR ADJACENT TO SHORING.
12. SUBSTITUTIONS FOR STRUCTURAL MEMBERS, HARDWARE, OR DETAILS SHALL BE REVIEWED BY THE ARCHITECT AND STRUCTURAL ENGINEER AND APPROVED BY THE APPROPRIATE AGENCY. FOR A SUBSTITUTION TO BE REVIEWED THE CONTRACTOR SHALL AGREE AND COMPLY WITH THE FOLLOWING:
    - 12.1. THE CONTRACTOR SHALL BE BILLED ON A TIME AND MATERIALS BASIS FOR THE REVIEW OF THE SUBSTITUTION WITH NO GUARANTEE OF APPROVAL.
    - 12.2. VERIFY THAT THE SUBSTITUTION DOES NOT AFFECT DIMENSIONS SHOWN ON DRAWINGS.
    - 12.3. THE CONTRACTOR SHALL ALSO PAY FOR CHANGES TO THE BUILDING DESIGN, WHICH INCLUDES BUT IS NOT LIMITED TO; ENGINEERING DESIGN, DETAILING, APPROVAL AGENCY PROCESS AND CONSTRUCTION COSTS CAUSED BY THE REQUESTED SUBSTITUTION.
    - 12.4. THE PROPOSED SUBSTITUTION IS TO HAVE NO ADVERSE AFFECT ON OTHER TRADES, THE CONSTRUCTION SCHEDULE, OR THE SPECIFIED WARRANTY REQUIREMENTS.
13. NO STRUCTURAL MEMBERS SHALL BE CUT, NOTCHED OR OTHERWISE PENETRATED UNLESS SPECIFICALLY APPROVED BY THE STRUCTURAL ENGINEER IN ADVANCE OR SHOWN ON THESE DRAWINGS.
14. THE CONTRACTOR SHALL VERIFY ALL DIMENSIONS PRIOR TO STARTING CONSTRUCTION. DIMENSIONS AND ELEVATIONS MUST BE VERIFIED WITH ARCHITECTURAL DRAWINGS. IN THE EVENT OF A CONFLICT, THE STRUCTURAL ENGINEER AND ARCHITECT ARE TO BE NOTIFIED IMMEDIATELY. DRAWING SCALES GIVEN ARE APPROXIMATE- DO NOT SCALE PLANS OR DETAILS.
15. SITE VISITS BY STRUCTURAL ENGINEER SHALL NOT BE IN LIEU OF INSPECTIONS.
16. LAP SPLICES SHALL BE IN ACCORDANCE WITH THE FOLLOWING TABLE, UNLESS NOTED OTHERWISE. WHERE CLASSES ARE NOT CALLED OUT ON THE DRAWINGS, USE CLASS "B" SPLICES.

	TENSION SPLICES (INCHES)				COMPRESSION SPLICES
BAR SIZE	TOP BARS "A"	TOP BARS "B"	OTHER BARS "A"	OTHER BARS "B"	(INCHES)
#3	16	21	12	16	12
#4	21	28	16	21	15
#5	27	35	21	27	19
#6	35	46	27	35	23
#7	48	62	37	48	26
#8	63	82	48	63	30
#9	80	104	61	80	34
#10	101	131	78	101	38
#11	125	162	96	125	42

COMPRESSION DOWEL EMBEDMENT: 22 BAR DIAMETERS. LAP WELDED FABRIC ONE SPACING OF CROSS WIRES PLUS 2 INCHES.

NO.	DATE	DESCRIPTION	NO.	DATE	DESCRIPTION

REVISIONS

DESIGNED BY: M. WIDMANN
DRAWN BY: D. LARSON
CHECKED BY: N/A

URS
2870 Gateway Oaks Drive, Ste. 150
Sacramento, CA 95833-3200
TEL: (916) 679-2000
FAX: (916) 679-2900

REGISTERED PROFESSIONAL ENGINEER M. Khaoul No. S-4087 EXP. 09-30-07 STRUCTURAL STATE OF CALIFORNIA

SOIL REMEDIAL DESIGN
COOPER DRUM COMPANY SUPERFUND SITE
9316 SOUTH ATLANTIC AVE, SOUTH GATE
LOS ANGELES COUNTY , CALIFORNIA 90280

ABBREVIATIONS, GENERAL NOTES,DESIGN CRITERIA FOUNDATION, CONCRETE AND REBAR NOTES

SCALE:	DATE:	DWG. FILE:	SHEET NO:
N.T.S.	8/30/2007	S-3.dwg	S-0

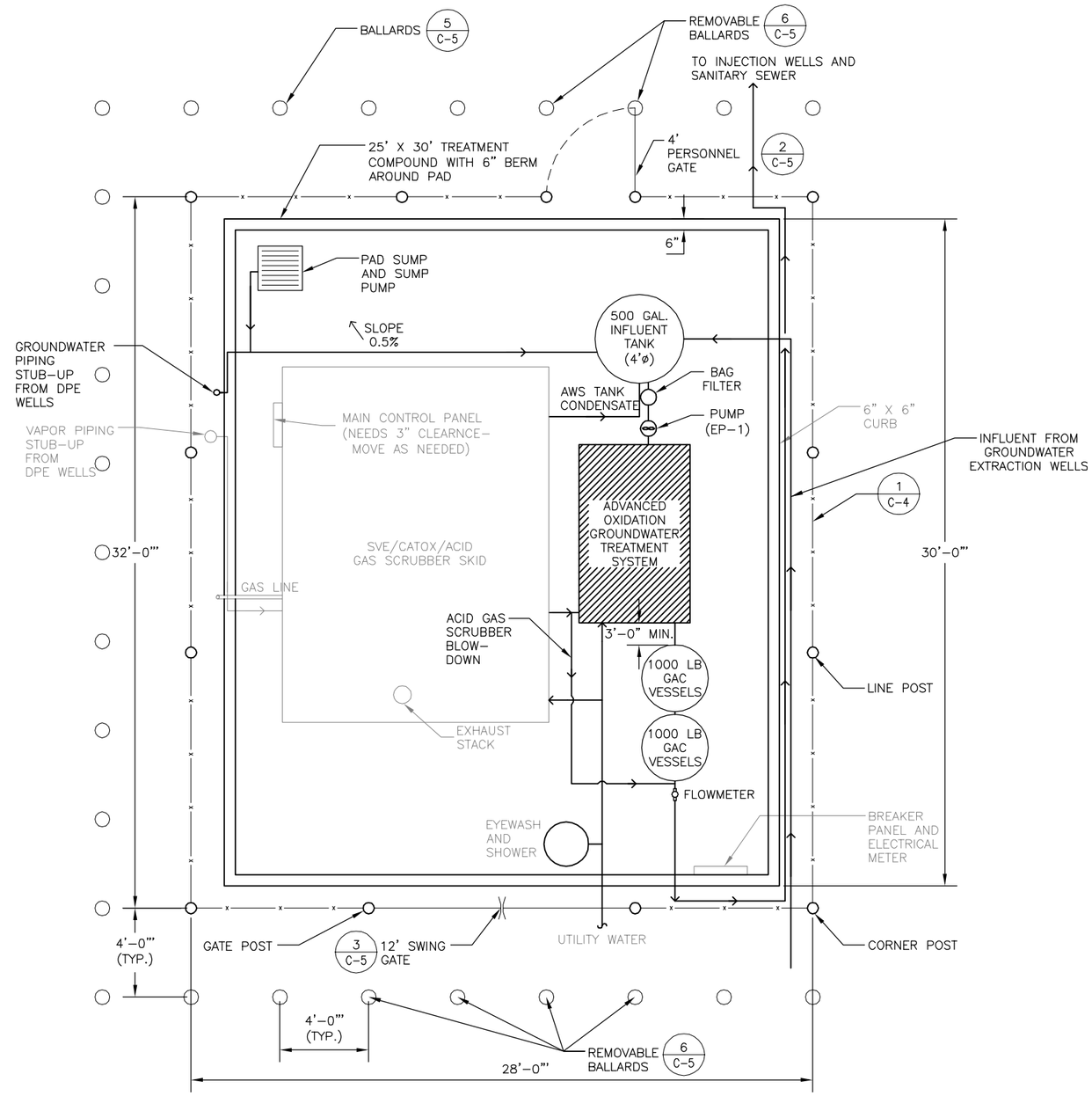

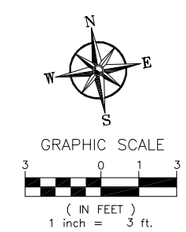

NO.	DATE	DESCRIPTION	NO.	DATE	DESCRIPTION

REVISIONS

DESIGNED BY: M.WIDMANN
DRAWN BY: D. LARSON
CHECKED BY: N/A

URS
2870 Gateway Oaks Drive, Ste. 150
Sacramento, CA 95833-3200
TEL: (916) 679-2000
FAX: (916) 679-2900

REGISTERED PROFESSIONAL ENGINEER M. Kisabul No. S-4087 EXP. 09-30-07 STRUCTURAL STATE OF CALIFORNIA

GROUNDWATER REMEDIAL DESIGN OPERABLE UNIT 1
COOPER DRUM COMPANY SUPERFUND SITE
9316 SOUTH ATLANTIC AVE, SOUTH GATE
LOS ANGELES COUNTY , CALIFORNIA 90280

TREATMENT COMPOUND PLAN

SCALE:	DATE:	DWG. FILE:	SHEET NO.
1"=3'-0"	8/23/2007	S-1.dwg	**S-1**

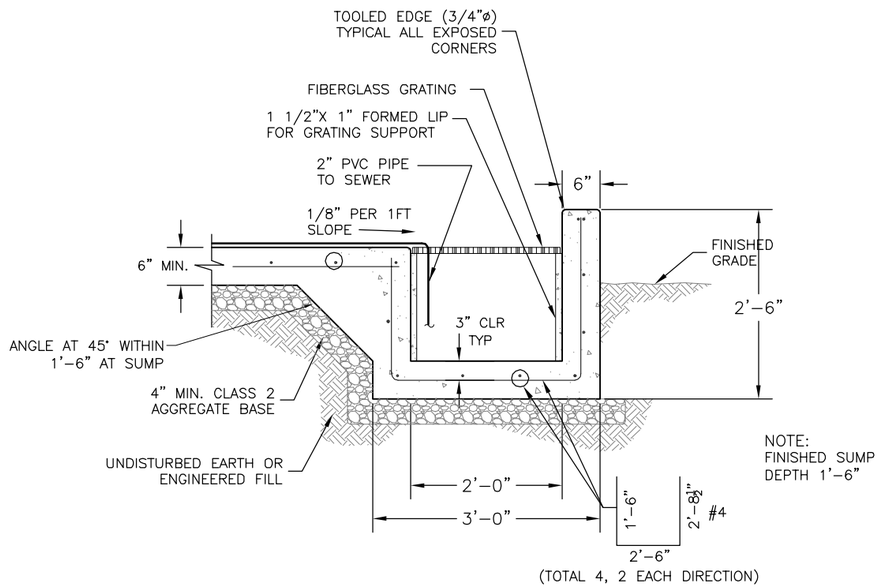

3 S-2 **SUMP DETAIL**
(NOT TO SCALE)

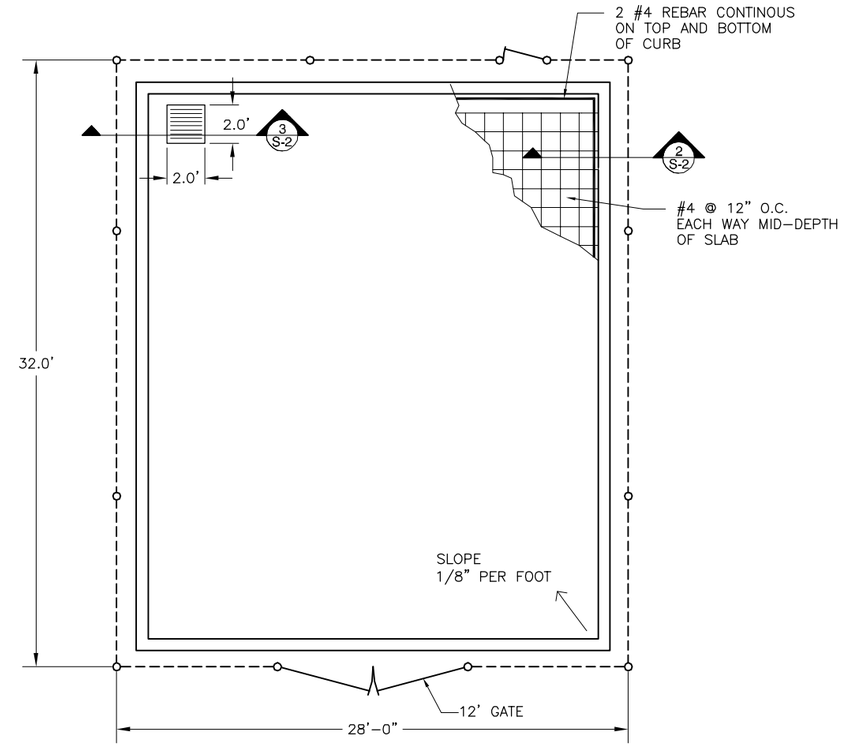

1 S-2 **TREATMENT COMPOUND SLAB (PLAN VIEW)**
(NOT TO SCALE)

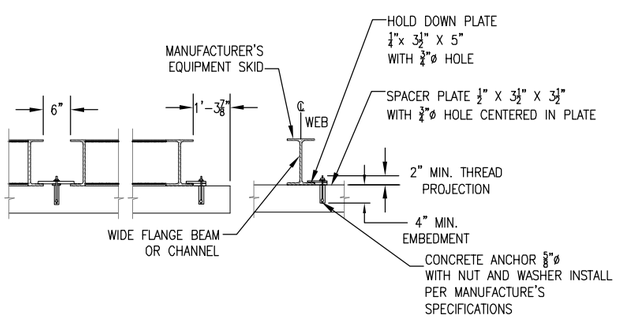

4 S-2 **PROPOSED EQUIPMENT SKID HOLD DOWN PLATE DETAIL**
(NOT TO SCALE)

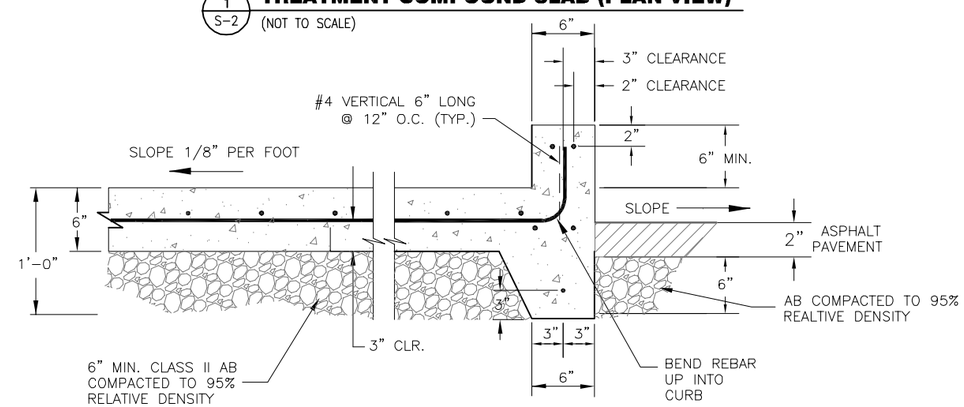

NOTES:

1) USE 2,500 PSI CONCRETE @ 28 DAYS

2 – **FOOTING AND SLAB (CROSS-SECTION)**
(NOT TO SCALE)

NO.	DATE	DESCRIPTION	NO.	DATE	DESCRIPTION

REVISIONS

DESIGNED BY: M. WIDMANN
DRAWN BY: D. LARSON
CHECKED BY: N/A

URS
2870 Gateway Oaks Drive, Ste. 150
Sacramento, CA 95833-3200
TEL: (916) 679-2000
FAX: (916) 679-2900

REGISTERED PROFESSIONAL ENGINEER M. Kisabul No. S-4087 EXP. 06-30-07 STRUCTURAL STATE OF CALIFORNIA

GROUNDWATER REMEDIAL DESIGN OPERABLE UNIT 1
COOPER DRUM COMPANY SUPERFUND SITE
9316 SOUTH ATLANTIC AVE, SOUTH GATE
LOS ANGELES COUNTY , CALIFORNIA 90280

CONCRETE DETAILS

SCALE:	DATE:	DWG. FILE:	SHEET NO.
N.T.S.	8/22/2007	S-2.dwg	S-2

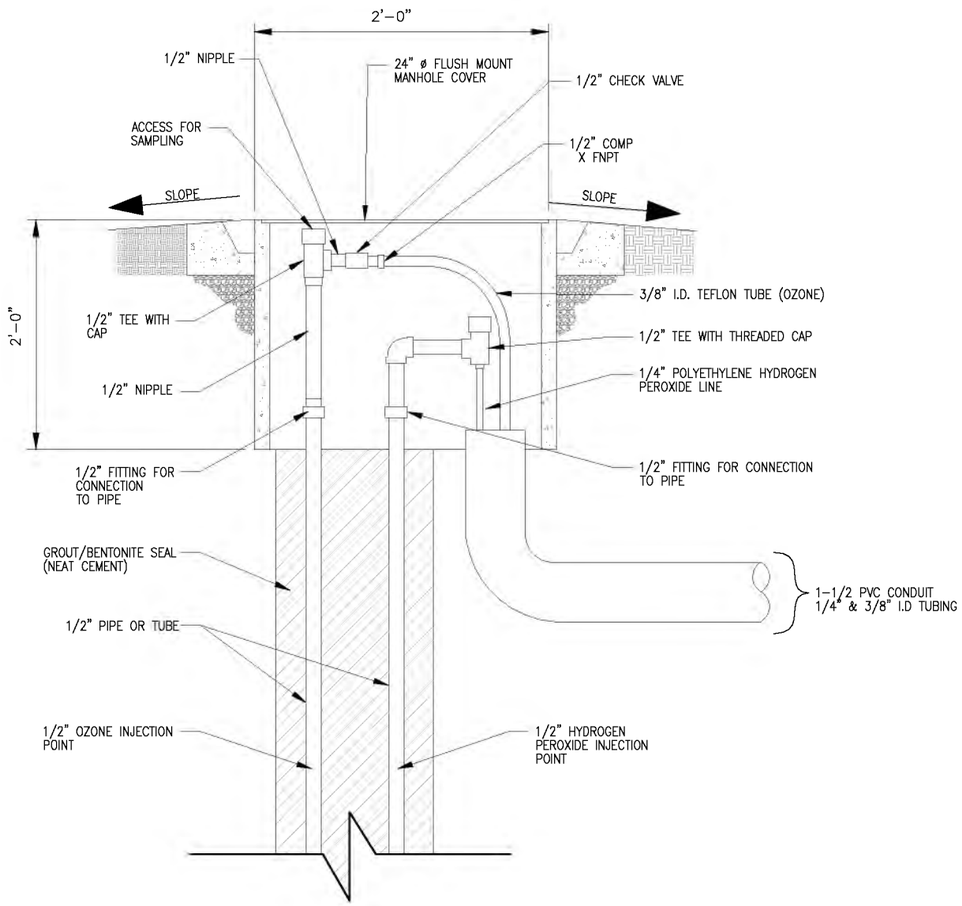

TYPICAL OZONE/PEROXIDE INJECTION WELL HEAD DETAILS

1 / C-1 **NTS**

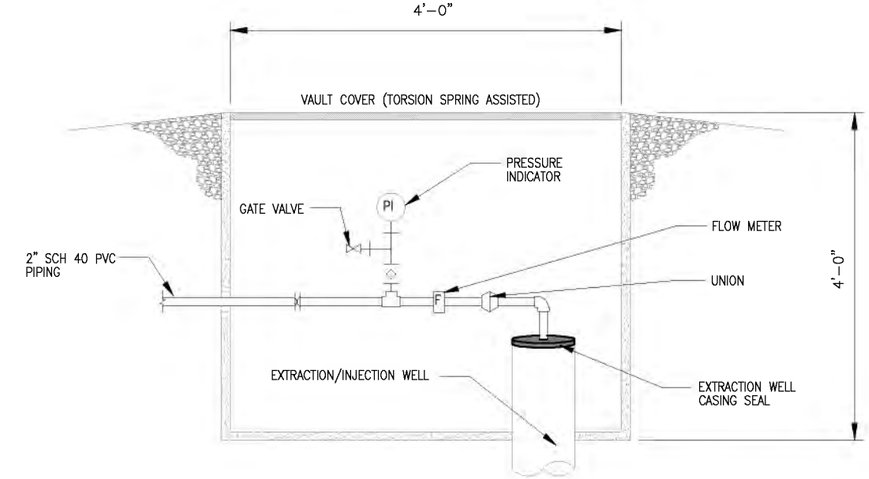

TYPICAL EXTRACTION WELL VAULT DETAIL PROFILE

3 / M-1 **NTS**

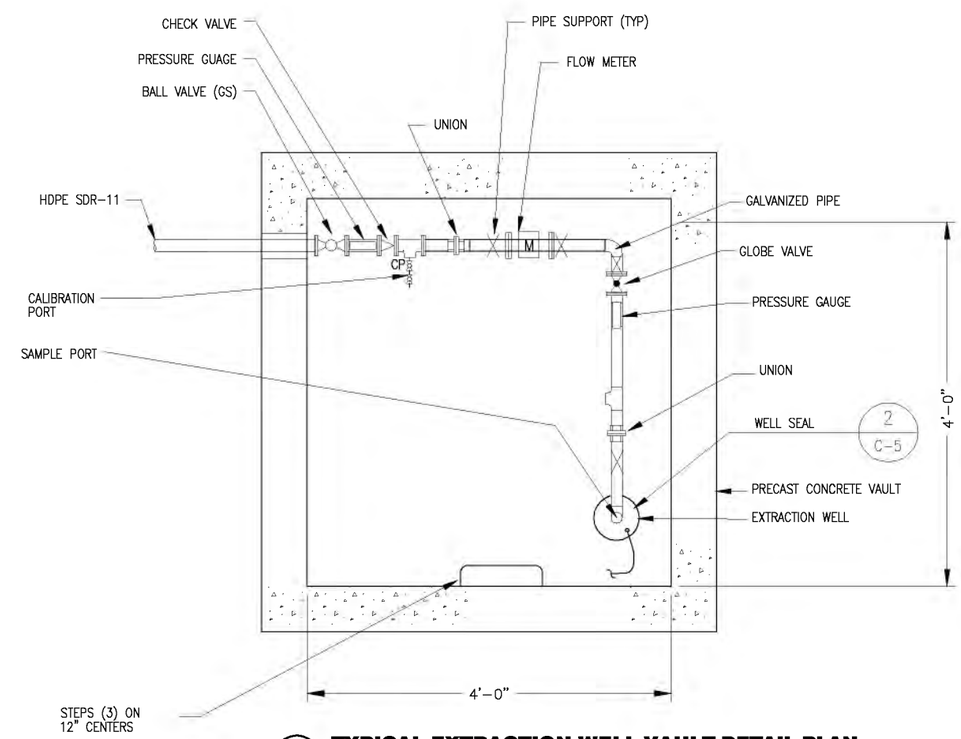

TYPICAL EXTRACTION WELL VAULT DETAIL PLAN

2 / C-1 C-2 **NTS**

NOTE:
1. ALL PIPING/TUBING DIMENSIONS SHOWN ARE TYPICAL FOR OZONE/PERIXIDE INJECTION.
2. ACTUAL DIMENSIONS MAY VARY DEPENDING ON THE VENDOR SELECTED AND OTHER ENGINEERING FACTORS.

NO.	DATE	DESCRIPTION	NO.	DATE	DESCRIPTION

REVISIONS

DESIGNED BY: M. WIDMANN
DRAWN BY: D. LARSON
CHECKED BY: N/A

URS
2870 Gateway Oaks Drive, Ste. 150
Sacramento, CA 95833-3200
TEL: (916) 679-2000
FAX: (916) 679-2900

REGISTERED PROFESSIONAL ENGINEER EDMUND D. TARTER No. 64825 Exp. ____ CIVIL STATE OF CALIFORNIA

GROUNDWATER REMEDIAL DESIGN OPERABLE UNIT 1
COOPER DRUM COMPANY SUPERFUND SITE
9316 SOUTH ATLANTIC AVE, SOUTH GATE
LOS ANGELES COUNTY , CALIFORNIA 90280

TYPICAL WELL HEAD DEATILS - OZONE/PEROXIDE WELL AND EXTRACTION/INJECTION WELL

SCALE:	DATE:	DWG. FILE:	SHEET NO.
N.T.S.	8/23/2007	M-1.dwg	M-1

GENERAL NOTES:

1. FURNISH AND INSTALL ALL NECESSARY LABOR, MATERIALS, EQUIPMENT AND INCIDENTALS REQUIRED TO INSTALL COMPLETE AND OPERATIONAL ELECTRICAL SYSTEMS ACCORDING TO THE INTENT OF THESE DRAWINGS AND ASSOCIATED SPECIFICATIONS WHETHER ITEMIZED OR NOT.

2. EXAMINE THE DRAWINGS FOR MECHANICAL EQUIPMENT AND PROVIDE STARTERS, CIRCUIT BREAKERS, SWITCHES, PUSHBUTTONS AND APPURTENANCES WHICH ARE NOT SPECIFIED TO BE WITH THE MECHANICAL EQUIPMENT. ERECT ALL ELECTRICAL EQUIPMENT NOT DEFINITELY STATED TO BE ERECTED BY OTHERS, FURNISH AND INSTALL CONDUIT WIRE AND CABLE AND MAKE CONNECTIONS REQUIRED TO PLACE ALL EQUIPMENT IN COMPLETE OPERATION.

3. THE ELECTRICAL CONTRACTOR SHALL HAVE THOROUGHLY EXAMINED THE SITE AND FAMILIARIZED HIMSELF WITH THE EXISTING CONDITIONS, AND SHALL HAVE MADE ALLOWANCE THEREFORE IN PREPARING HIS PROPOSAL . HE SHALL VERIFY EXISTING CONDITIONS, PULLBOXES, ELECTRICAL DISTRIBUTION SYSTEMS AND DEMOLITION REQUIREMENTS PRIOR TO SUBMITTING A BID.

4. IN THE EVENT OF DISCREPENCIES BETWEEN EXISTING CONDITIONS AND THE DRAWINGS, THE ELECTRICAL CONTRACTOR SHALL BID NEW CONDITIONS, WIRES AND NECESSARY EQUIPMENT IN ORDER TO COMPLETE THE JOB AND PROVIDE A FULLY OPERABLE AND AND ACCEPTABLE SYSTEMS. EXTRAS WILL NOT BE ALLOWED FOR WORK NOT INDICATED OR NOTED ON THE DRAWINGS WHEN SUCH WORK IS APPARENT FROM AN INSPECTION OF THE PREMISES AT THAT TIME .

5. THE ELECTRICAL CONTRACTOR SHALL BE RESPONSIBLE FOR MAINTAINING CONTINUITY OF EXISTING ELECTRICAL CIRCUITS BEING USED FOR EXISTING LIGHTING AND RECEPTACLES TO REMAIN WHETHER INDICATED OR NOT. VERIFY USAGE FOR ALL BRANCH CIRCUITS IN EXISTING PANELBOARDS AND ADJUST CIRCUITS AS NECESSARY. DOCUMENT PANEL CIRCUIT DIRECTORIES ON AS BUILT DRAWINGS AND PROVIED TYPE WRITTEN DIRECTORY CARDS FOR ALL PANELBOARDS.

6. ALL MATERIALS USED ON THIS PROJECT SHALL BE LISTED AND BEAR THE LABEL OF UNDERWRITERS LABORTORIES. AND APPROVED FOR ITS INTENDED USE .

7. ELECTRICAL WORK SHALL CONFORM TO THE 2004 CALIFORNIA ELECTRICAL CODE AND COUNTY OF LOS ANGELES CODES.

8. FIRE SEAL AROUND ALL CONDUITS PENETRATIONS THROUGH FIRE BARRIERS WITH AN APPROVED FIRE SEALANT EQUAL TO THE RATING OF THE SURFACE PENETRATED. FIRE SEAL INSIDE OF CONDUIT AFTER CONDUCTOR INSTALLATION .

ABBREVIATIONS:

120V	120 VOLTS
C O	CONDUIT ONLY
C	CONDUIT
CONT	CONTROLS
(E)	EXISTING
EL	EMERGENCY LIGHT
EOL	INDICATES DEVICE w/ END-OF-LINE RESISTOR
FACP	FIRE ALARM CONTROL PANEL
MT	EMPTY CONDUIT WITH PULLSTRING
(N)	NEW
NIES	NOT INCLUDED ELECTRICAL SCOPE
NL	NIGHT LIGHT
PFB	PROVIDE FOR FUTURE BREAKER
(R)	REMOVE
(RE)	RELOCATE EXISTING
UNO	UNLESS NOTED OTHERWISE
WP	WEATHERPROOF

LEGEND:

- FLUORESCENT LIGHT FIXTURE – RECESSED WITH INTEGRAL BATTERY PACK FOR EMERGENCY OPERATION
- 2g FLUORESCENT LIGHT FIXTURE – RECESSED, NUMBER DENOTES CIRCUIT, LETTER DENOTES SWITCH DESIGNATION
- FLUORESCENT HID LIGHT FIXTURE – RECESSED
- HID LIGHT FIXTURE – WALL MOUNTED
- SINGLE POLE TOGGLE SWITCH, @ +46" UNO
- 2 TWO POLE TOGGLE SWITCH, @ +46" UNO
- 3 THREE-WAY TOGGLE SWITCH, @ +46" UNO
- M MOTOR RATED SINGLE POLE SWITCH, @ UNIT UNO
- A FIXTURE TAG: LETTER INDICATES TYPE
- J JUNCTION BOX, SIZE & TYPE AS INDICATED OR AS REQUIRED
- 20 AMP 125V 3W DUPLEX RECEPTACLE, @ +18" UNO
- 20 AMP 125V 3W DUPLEX RECEPTACLE WITH GFCI, ABOVE COUNTER SPLASH
- DEDICATED CIRCUIT RECEPTACLE, 20 AMP 125V 3W DUPLEX, @ +18" UNO
- 20 AMP 125V 3W DOUBLE DUPLEX RECEPTACLE, @ +18" UNO
- NON-FUSED DISCONNECT SWITCH
- CIRCUIT BREAKER DISCONNECT SWITCH
- FUSED DISCONNECT SWITCH, SIZE PER UNIT LABEL
- 1 MOTOR, N.I.E.S. CONNECT AS REQUIRED, NUMBER INDICATES HP
- CONTROL EQUIPMENT. CONNECT AS REQUIRED
- PANELBOARD – SURFACE MOUNTED – SEE SCHEDULE
- TELEPHONE OUTLET, 4" SQ. BOX w/ SINGLE DEVICE RING & PLATE @ +18" UNO
- DATA OUTLET, 4" SQ. BOX w/ SINGLE DEVICE RING & PLATE @ +18" UNO
- CONDUIT CONCEALED IN CEILING OR WALL
- HOMERUN TO RESPECTIVE PANEL OR TERMINAL CABINET – OVERHEAD
- HOMERUN TO RESPECTIVE PANEL OR TERMINAL CABINET – UNDERGROUND
- CONDUIT RISER – UP
- CONDUIT RISER – DOWN

BRANCH CIRCUIT WITHOUT FURTHER DESIGNATION INDICATES A 2 #12 WIRE CIRCUIT AND 1#12 GROUND WIRE. ALL CONDUITS AND RACEWAY MUST HAVE AN INSULATED GROUND WIRE SIZED PER NEC 250.122, CONDUIT SIZE SHALL BE 3/4" UNO.

- UNDERGROUND CONDUIT OU1 RA
- UNDERGROUND CONDUIT OU2 RA

FLAG NOTE SHOWN ON SAME SHEET

- A / E1.0 SECTION DESIGNATION; TOP LETTER INDICATES SECTION, BOTTOM LETTER/NUMBER INDICATES SHEET
- 1 / E1.0 DETAIL DESIGNATION; TOP NUMBER INDICATES DETAIL, BOTTOM LETTER/NUMBER INDICATES SHEET
- MECHANICAL & PLUMBING EQUIPMENT DESIGNATION
- T LINE VOLTAGE THERMOSTAT, NIES, INSTALL & CONNECT AS REQUIRED
- TV TELEVISION OUTLET
- EC EMERGENCY CALL OUTLET
- P PUBLIC TELEPHONE OUTLET
- SPECIAL OUTLET. SEE PLANS FOR SPECIFICATION
- SEALING FITTING WITH SEALING COMPOUND FOR CLASS 1, DIV. 1

NOTE: SYMBOLS INDICATED ABOVE MAY NOT NECESSARILY APPEAR AS PART OF THESE DRAWINGS IF NOT REQUIRED.

NO.	DATE	DESCRIPTION	NO.	DATE	DESCRIPTION

REVISIONS

DESIGNED BY: M. WIDMANN
DRAWN BY: D. LARSON
CHECKED BY: N/A

URS
2870 Gateway Oaks Drive, Ste. 150
Sacramento, CA 95833-3200
TEL: (916) 679-2000
FAX: (916) 679-2900

REGISTERED PROFESSIONAL ENGINEER – HENRY FELIX QUINTANA – No. E14642 – Exp. 12-31-06 – ELECTRICAL – STATE OF CALIFORNIA

GROUNDWATER REMEDIAL DESIGN OPERABLE UNIT 1
COOPER DRUM COMPANY SUPERFUND SITE
9316 SOUTH ATLANTIC AVE, SOUTH GATE
LOS ANGELES COUNTY , CALIFORNIA 90280

ELECTRICAL GENERAL NOTES AND SYMBOLS

SCALE:	DATE:	DWG. FILE:	SHEET NO.
N.T.S.	8/22/2007	E-1.dwg	E-1

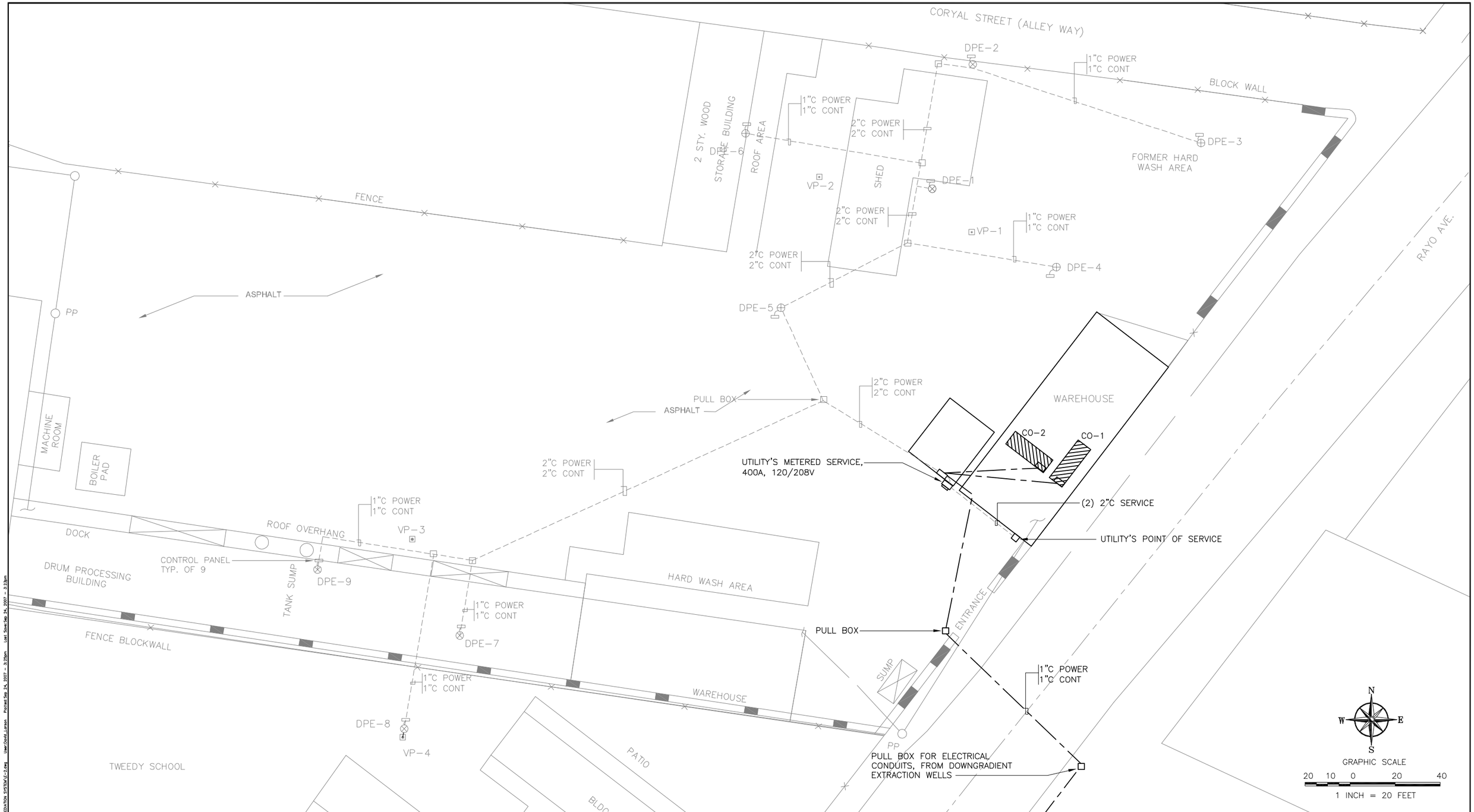

SEE CONTINUATION ON SHEET E-3

NO.	DATE	DESCRIPTION	NO.	DATE	DESCRIPTION

REVISIONS

DESIGNED BY: M. WIDMANN
DRAWN BY: D. LARSON
CHECKED BY: N/A

URS
2870 Gateway Oaks Drive, Ste. 150
Sacramento, CA 95833-3200
TEL: (916) 679-2000
FAX: (916) 679-2900

REGISTERED PROFESSIONAL ENGINEER HENRY FELIX QUIJANO No. E14642 Exp. 12-31-06 ELECTRICAL STATE OF CALIFORNIA

GROUNDWATER REMEDIAL DESIGN OPERABLE UNIT 1
COOPER DRUM COMPANY SUPERFUND SITE
9316 SOUTH ATLANTIC AVE, SOUTH GATE
LOS ANGELES COUNTY , CALIFORNIA 90280

ELECTRICAL SITE PLAN

SCALE:	DATE:	DWG. FILE:	SHEET NO.
1"=20'-0"	8/22/2007	E-2.dwg	**E-2**

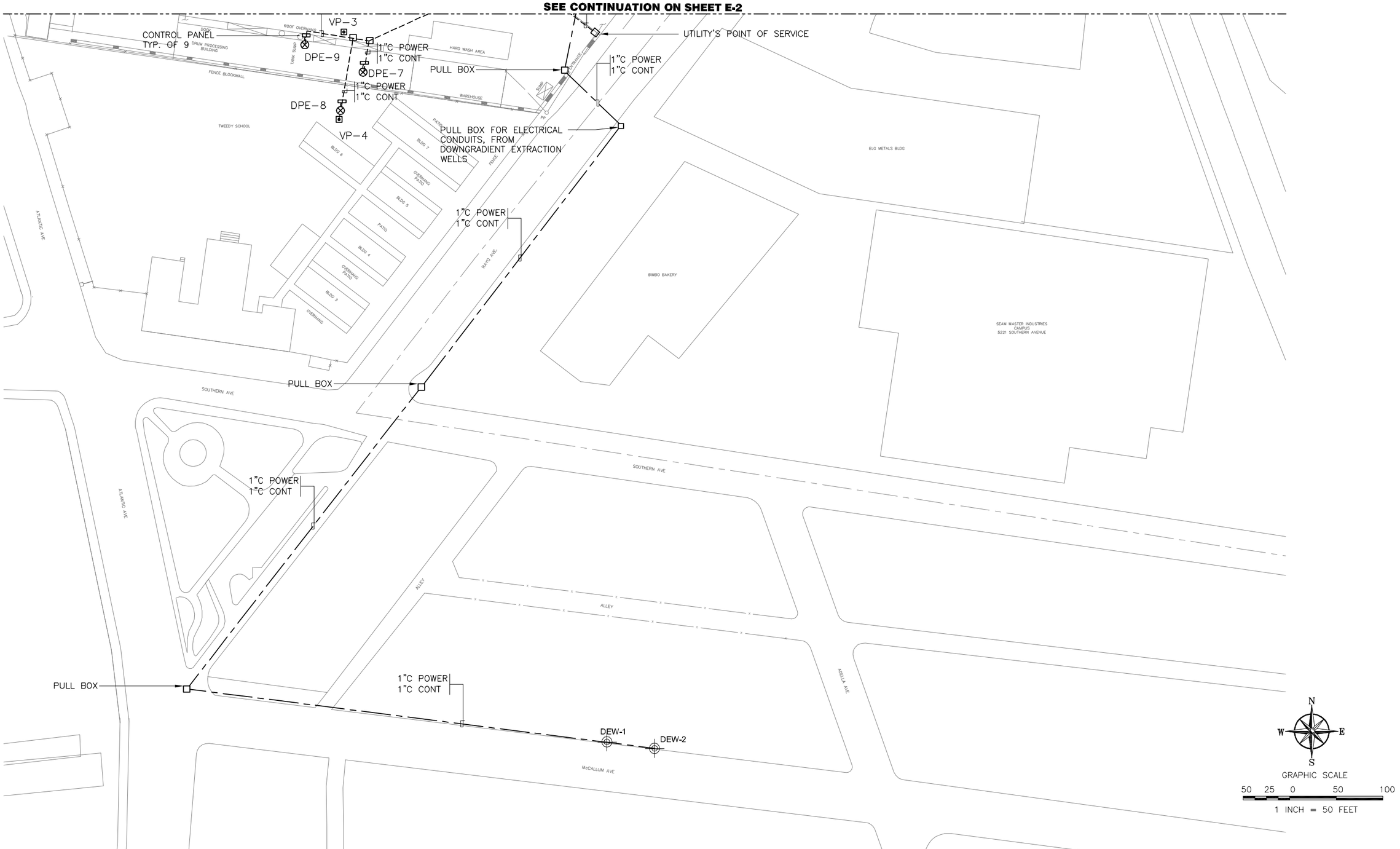

NO.	DATE	DESCRIPTION	NO.	DATE	DESCRIPTION

REVISIONS

DESIGNED BY: M. WIDMANN
DRAWN BY: D. LARSON
CHECKED BY: N/A

URS
2870 Gateway Oaks Drive, Ste. 150
Sacramento, CA 95833-3200
TEL: (916) 679-2000
FAX: (916) 679-2900

REGISTERED PROFESSIONAL ENGINEER HERBERT FELIX OUTLAND No. E14642 Exp. 12-31-06 ELECTRICAL STATE OF CALIFORNIA

GROUNDWATER REMEDIAL DESIGN OPERABLE UNIT 1
COOPER DRUM COMPANY SUPERFUND SITE
9316 SOUTH ATLANTIC AVE, SOUTH GATE
LOS ANGELES COUNTY , CALIFORNIA 90280

ELECTRICAL SITE PLAN
DOWN GRADIENT EXTRACTION WELLS

SCALE:	DATE:	DWG. FILE:	SHEET NO.
1"=50'-0"	8/22/2007	E-2.dwg	E-3

FEEDER SCHEDULE

400B	(2) 2"C – 4#3/0 EACH (UTILITY SERVICE)
400A	(2) 2"C – 4#3/0 & 1#2G EACH
90A	1 1/2"C – 4#3 & 1#8G
50A	1"C – 4#6 & 1#8G
20B	1"C 2#10 & 1#10G

KEYED NOTES

1. UTILITY'S PAD MOUNTED TRANSFORMER
2. 400A, 208/120V, 3 PHASE, 4 WIRE, METER SOCKET AND MAIN PER UTILITY REQUIREMENTS
3. PANEL LA, 400A. 208/120V, 3PHASE, 22 KAISC
4. 3/4" X 10' COPPER CLAD GROUND ROD.

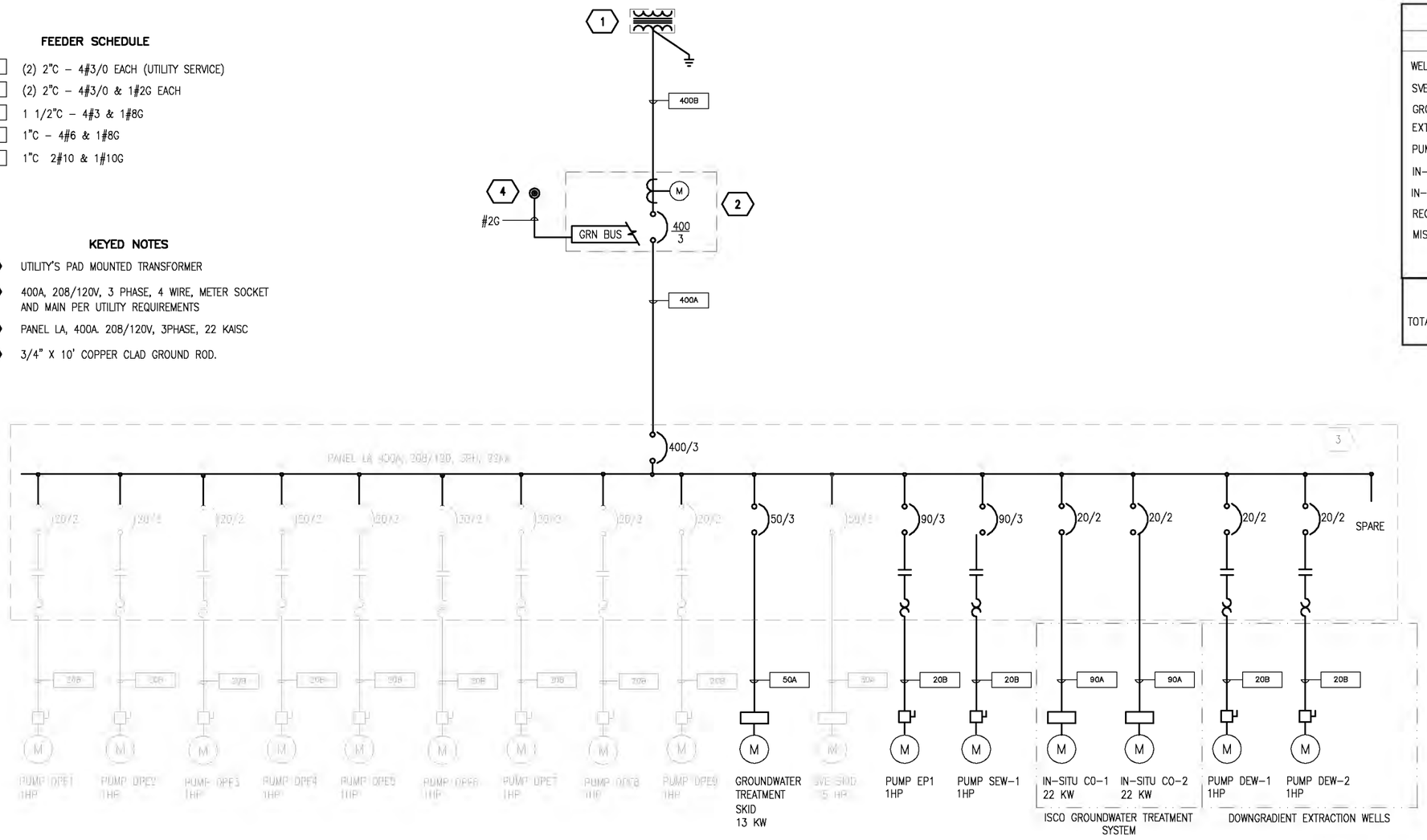

SINGLE LINE DIAGRAM

LOAD SUMMARY

EQUIPMENT	RATING	LOAD
WELL SUMP PUMP DPE-1 TO DPE-9	(9) 2 HP	18,000 VA
SVE SKID	7 1/2 HP	7,500 VA
GROUNDWATER TREATMENT SKID	13 KW	13,000 VA
EXTRACTION PUMPS	(2) 2 HP	4,000 VA
PUMP DEW-1 AND DEW-2	(2) 2 HP	4,000 VA
IN-SITU CHEM. OXIDATION 1	22 KW	22,000 VA
IN-SITU CHEM. OXIDATION 2	22 KW	22,000 VA
RECEPTACLES	.2 KW	200 VA
MISCELLANEOUS	.2 KW	400 VA
TOTAL		91,100 VA
TOTAL AMPS AT 208V, 3PH		253 AMPS

PANEL "LA" SCHEDULE

POWER SOURCE: SERVICE — LOCATION: ELECT RM — 208

TYPE: POWERLINE — BUS: 400A — MAIN: 400A — VOLTAGE: 208Y/120 VOLT, 3 PHASE, 4 WIRES — MOUNTING: SURFACE — REMARKS: 22K AIC MIN. SYMM

LOAD SERVED	kVA	CB	CT	PHASE	CT	CB	kVA	LOAD SERVED
SUB PUMP DPE-1	0.9	20/2	1	A	2	50/3	3.1	SVE SKID
	0.9		3	B	4		3.1	
SUB PUMP DPE-2	0.9	20/2	5	C	6		3.1	
	0.9		7	A	8	50/3	4.4	HCO SKID
SUB PUMP DPE-3	0.9	20/2	9	B	10		4.4	
	0.9		11	C	12		4.4	
SUB PUMP DPE-4	0.9	20/2	13	A	14	20/1	0.9	DEW-2
	0.9		15	B	16	20/1	0.9	
SUB PUMP DPE-5	0.9	20/2	17	C	18	20/1		SPARE
	0.9		19	A	20	20/2	0.9	PUMP EPE-1
SUB PUMP DPE-6	0.9	20/2	21	B	22		0.9	
	0.9		23	C	24	20/2	0.9	PUMP SEW-1
SUB PUMP DPE-7	0.9	20/2	25	A	26		0.9	
	0.9		27	B	28	20/2	0.9	PUMP DEW-2
SUB PUMP DPE-8	0.9	20/2	29	C	30		0.9	
	0.9		31	A	32	90/3	7.3	IN-SITU CO-1
SUB PUMP DPE-9	0.9	20/2	33	B	34		7.3	
	0.9		35	C	36		7.3	
RECEP.	0.2	20/1	37	A	38	90/3	7.3	IN-SITU CO-2
MISC	0.2	20/1	39	B	40		7.3	
SCADA	0.2	20/1	41	C	42		7.3	

NOTES:

PHASE A=	30.4	kVA
PHASE B=	30.4	kVA
PHASE C=	29.5	kVA
TOTAL =	90.3	kVA
TOTAL =	250.8	Amperes

NO.	DATE	DESCRIPTION	NO.	DATE	DESCRIPTION

REVISIONS

DESIGNED BY: M. WIDMANN
DRAWN BY: D. LARSON
CHECKED BY: N/A

URS
2870 Gateway Oaks Drive, Ste. 150
Sacramento, CA 95833-3200
TEL: (916) 679-2000
FAX: (916) 679-2900

REGISTERED PROFESSIONAL ENGINEER HENRY TELIK DONUGHO No. E14642 Exp. 12-31-06 ELECTRICAL STATE OF CALIFORNIA

GROUNDWATER REMEDIAL DESIGN OPERABLE UNIT 1
COOPER DRUM COMPANY SUPERFUND SITE
9316 SOUTH ATLANTIC AVE, SOUTH GATE
LOS ANGELES COUNTY , CALIFORNIA 90280

SINGLE LINE DIAGRAM

SCALE:	DATE:	DWG. FILE:	SHEET NO.
N.T.S.	8/22/2007	E-3.dwg	E-4

Cost Estimate Summary For The Selected Remedy For Groundwater	
Description	**Cost**
Capital Costs	
Construction	
ISCO install	$262,763
Above Ground Treatment Process install	$46,140
Treatment Compound Slab	$22,368
Treatment Compound Fence and Bollards	$23,250
Bio Barrier Install	$692,368
POTW Connection Fee	$247,125
Monitor well Install	$162,800
Treatment Trenching and Piping (Source Area)	$127,774
Treatment Trenching and Piping (Downgradient)	$143,750
Extraction and Injection Wellheads and Equipment Install (Source Area)	$128,200
Extraction Wellheads and Equipment Install (Downgradient)	$86,973
SCADA System	$25,000
Initial Startup Test	$13,500
Subtotal (construction)	$1,982,011
Bid contingencies(5% of total)	$99,101
Report preparation (RAWP, HASP, Plans, Final O&M)(5% of total)	$99,101
Field and laboratory testing during construction (1% of total)	$19,820
Reporting during construction (1% of total)	$19,820
Total Capital Cost	**$2,219,852**
OPERATIONS AND MAINTENANCE COSTS	
Subtotal O&M (discounted first three years) [a]	$929,557
Subtotal O&M (Remaining 17 years discounted) Downgradient	$1,650,387
Subtotal O&M (Discounted)	**$2,579,944**
MONITORING AND REPORTING	
Subtotal Monitoring and Reporting (Total Time- 23 yr)[a,b]	**$1,230,383**
TOTAL COST	**$6,030,179**

Date: September 13, 2007

Note: Inflation rates for 2007 through 2030 (As provided in the ROD) was factored into the 7% discount

[a] A 7% discount assumed for 20 years of O&M operation

[b] Closure sampling is assumed to occur in 2031

Detail Cost Sheet

Source Area O&M Costs	
O&M Labor Annual	$21,600
Liquid Carbon Change Out Annual	$2,000
Hydrogen Peroxide Annual	$2,761
Electricity Annual 64 kw per design drawing E-4	$72,883
O&M Labor Downgradient Extraction wWells Annual	$7,200
System service life costs Annual	$5,384
POTW permit cost Annual	$21,181
ISCO Rental Annual	$192,000
Advanced oxidation process Rental Annual	$54,000
Subtotal O&M Annual (base value)	$379,009

Year	Inflation	P/F	Discounted Inflation	Cost/Year
1	1.040	0.8734	0.8734	$331,026
2	1.066	0.8163	0.8163	$309,385
3	1.093	0.7629	0.7629	$289,146

TOTAL Present Value O&M 3 years **$929,557**

Down Gradient Containment and Treatment O&M Costs	
O&M Labor Source Area Annual	$21,600
Liquid Carbon Change Out Annual	$2,000
Hydrogen Peroxide Annual	$2,761
Electricity Annual based on 20 kw per design drawing E-4	$22,776
O&M Labor Downgradient Annual	$7,200
System service life costs Annual	$5,384
POTW permit cost Annual	$21,181
Advanced oxidation process Rental Annual	$54,000
Subtotal O&M Annual (Base value)	**$136,902**

Year	Inflation	P/F	Discounted Inflation	Cost/Year
4	1.12	0.8734	0.98	$133,915
5	1.15	0.8163	0.94	$128,289
6	1.18	0.7629	0.90	$122,894
7	1.21	0.7130	0.86	$117,727
8	1.24	0.6663	0.82	$112,766
9	1.27	0.6227	0.79	$108,022
10	1.30	0.5820	0.76	$103,486
11	1.33	0.5439	0.72	$99,129
12	1.36	0.5083	0.69	$94,957
13	1.40	0.4751	0.66	$90,973
14	1.43	0.4440	0.64	$87,144
15	1.47	0.4150	0.61	$83,488
16	1.51	0.3878	0.58	$79,967
17	1.54	0.3624	0.56	$76,597
18	1.58	0.3387	0.54	$73,378
19	1.62	0.3166	0.51	$70,305
20	1.66	0.2959	0.49	$67,351

TOTAL Present Value 17years following the initial 3 years **$1,650,387**

OU 1 Source Area Strategy - Capital Costs

ISCO Costs

Item	Unit Cost	Unit	Quantity	Extended Cost
ISCO injection points	$750	ea	24	$18,000
ISCO wellhead kits	$750	ea	24	$18,000
Sparge well install	$12,500	well	12	$150,000
Conveyance piping (including ozone and hydrogen peroxide)	$6	ft	750	$4,500
Conveyance tubing	$2.25	ft	650	$1,463
Electrical Installation	$51,800	LS	1	$51,800
Permit costs	$3,000	LS	1	$3,000
ISCO ODC's (including demob)	$10,000	LS	1	$10,000
Startup O&M Labor	$6,000	LS	1	$6,000
Subtotal				$262,763
ISCO system install and startup assist	$1,500	day	9	$13,500
Trenching costs (including labor, material costs)	$127,774	LS	1	$127,774
TOTAL				$404,037

Treatment Equipment Costs

Item	Unit Cost	Unit	Quantity	Extended Cost
Install and startup assist	$1,500	day	5	$7,500
Demobilization costs	$1,500	unit	1	$1,500
Liquid GAC costs	$35,640	LS	1	$35,640
Freight costs (in and out)	$4,500	RT	2	$9,000
Subtotal				$46,140
Treatment pad installation and setup	$45,618	ea	1	$45,618
TOTAL				$145,398

Extraction Well Install

Item	Unit Cost	Unit	Quantity	Extended Cost
Extraction well (20 gpm)	$30,000	ea	1	$30,000
Conveyance piping to well	$2.25	foot	200	$450
Submersible pump cost	$1,100	ea	1	$1,100
Flow meters	$3,100	ea	1	$3,100
Valves and fittings	$100	ea	10	$1,000
Traffic-Rated Well vaults	$5,000	ea	1	$5,000
Subtotal				$40,650

Injection Well Install

Item	Unit Cost	Unit	Quantity	Extended Cost
Injection well (25 gpm)	$30,000	ea	2	$60,000
Conveyance piping to well	$2.25	foot	600	$1,350
Injection pump to well	$900	ea	2	$1,800
Flow meters	$3,100	ea	4	$12,400
Valves and fittings	$100	ea	20	$2,000
Traffic-Rated Well vaults	$5,000	ea	2	$10,000
Subtotal				$87,550
Total Extraction and Injection Wells				$128,200

Accessories

Item	Unit Cost	Unit	Quantity	Extended Cost
SCADA system	$25,000	ea	1	$25,000

OU 1 Source Area Strategy - Recurring (O&M) Costs

Item	Unit Cost	Unit	Quantity	Extended Cost
Preventative maintenance	$5,384	year	1	$5,384
O&M labor	$1,800	month	12	$21,600
Electricity based on 64 Kw for 24/7 operation 365yr	$0.13	kWh	560,640	$72,883
Electrical based on design drawings E-4				
Hydrogen peroxide	$2,761	year	1	$2,761
Liquid GAC changeouts	$2,000	year	1	$2,000
Ex-situ oxidation treatment unit rental	$4,500	month	12	$54,000
ISCO treatment unit rental	$16,000	month	12	$192,000

OU 1 Downgradient Area Strategy - Capital Costs

Extraction Well Installation

Item	Unit Cost	Unit	Quantity	Extended Cost
Extraction well (2*25 gpm per well)	$30,000	ea	2	$60,000
Conveyance piping to well	$2.53	foot	1150	$2,913
Submersible pump, well equip cost	$4,430	ea	2	$8,860
Well electrical permit cost	$3,000	ea	1	$3,000
Flow meters	$3,100	ea	2	$6,200
Valves and fittings	$100	ea	10	$1,000
Traffic-Rated Well vaults	$5,000	ea	1	$5,000
Subtotal				$86,973
Trenching costs	$125	foot	1150	$143,750

Bioremediation Barrier Installation

Item	Unit Cost	Unit	Quantity	Extended Cost
Carbon substrate cost- first injection	$331,245	LS	1	$331,245
Carbon substrate cost- second injection	$165,623	LS	1	$165,623
Direct push injection/ startup-1	$3,700	day	25	$92,500
Direct push injection/ startup-2	$3,700	day	15	$55,500
Technician support	$20,000	event	2	$40,000
Freight costs (in and out)	$1,500	RT	3	$4,500
Electrical permit costs (estimate from Henry O)	$3,000	LS	1	$3,000
TOTAL				$692,368
POTW Connection Fee	$247,125	LS	1	$247,125
Electricity based on 20 Kw for 24/7 operation 365yr; Electrical based on design drawings E-4	$0.13	kWh	175,200	$22,776

OU 1 Downgradient Area Strategy - Recurring (O&M) Costs

Item	Unit Cost	Unit	Quantity	Extended Cost
O&M cost (2 technicians- 12 hrs/event - quarterly sampling - 1 year)	$75	hr	96	$7,200
POTW permit costs	$21,181	year	1	$21,181

Annual Performance Monitoring					$50,285
Year	Inflation	P/F	Discounted Inflation	Cost/Year	
1	1.040	0.8734	0.91	$45,676	
2	1.066	0.8163	0.87	$43,757	
3	1.093	0.7629	0.83	$41,917	
4	1.120	0.7130	0.80	$40,155	
5	1.148	0.6663	0.76	$38,463	
6	1.177	0.6227	0.73	$36,844	
7	1.206	0.5820	0.70	$35,297	
8	1.236	0.5439	0.67	$33,811	
9	1.267	0.5083	0.64	$32,388	
10	1.299	0.4751	0.62	$31,029	
11	1.331	0.4440	0.59	$29,723	
12	1.365	0.4150	0.57	$28,476	
13	1.399	0.3878	0.54	$27,275	
14	1.434	0.3624	0.52	$26,126	
15	1.469	0.3387	0.50	$25,028	
16	1.506	0.3166	0.48	$23,980	
17	1.544	0.2959	0.46	$22,972	
18	1.582	0.2765	0.44	$22,003	
19	1.622	0.2584	0.42	$21,076	
20	1.663	0.2415	0.40	$20,190	
21	1.704	0.2257	0.38	$19,341	
22	1.747	0.2109	0.37	$18,525	
23	1.790	0.1971	0.35	$17,745	
		23 YEAR TOTAL		$681,798	

SOURCE AREA EXTRACTION AND INJECTION WELLS 3 YEARS					$7,740
Year	Inflation	P/F	Discounted Inflation	Cost/Year	
1	1.040	0.8734	0.91	$7,031	
2	1.066	0.8163	0.87	$6,735	
3	1.093	0.7629	0.83	$6,452	
		3 YEAR TOTAL		$20,218	

Annual ISCO WDR Monitoring					$62,957
Year	Inflation	P/F	Discounted Inflation	Cost/Year	
1	1.040	0.8734	0.91	$57,186	
2	1.066	0.8163	0.87	$54,783	
3	1.093	0.7629	0.83	$52,480	
		3 YEAR TOTAL		$164,449	

Annual HRC WDR Monitoring					$34,100
Year	Inflation	P/F	Discounted Inflation	Cost/Year	
1	1.040	0.8734	0.91	$30,974	
2	1.066	0.8163	0.87	$29,673	
3	1.093	0.7629	0.83	$28,425	
4	1.120	0.7130	0.80	$27,230	
5	1.148	0.6663	0.76	$26,083	
		5 YEAR TOTAL		$142,385	

Annual Treatment System Monitoring					$14,720
Year	Inflation	P/F	Discounted Inflation	Cost/Year	
1	1.040	0.8734	0.91	$13,371	
2	1.066	0.8163	0.87	$12,809	
3	1.093	0.7629	0.83	$12,270	
4	1.120	0.7130	0.80	$11,754	
5	1.148	0.6663	0.76	$11,259	
6	1.177	0.6227	0.73	$10,785	
7	1.206	0.5820	0.70	$10,333	
8	1.236	0.5439	0.67	$9,898	
9	1.267	0.5083	0.64	$9,481	
10	1.299	0.4751	0.62	$9,083	
11	1.331	0.4440	0.59	$8,701	
12	1.365	0.4150	0.57	$8,336	
13	1.399	0.3878	0.54	$7,984	
14	1.434	0.3624	0.52	$7,648	
15	1.469	0.3387	0.50	$7,326	
16	1.506	0.3166	0.48	$7,020	
17	1.544	0.2959	0.46	$6,725	
18	1.582	0.2765	0.44	$6,441	
19	1.622	0.2584	0.42	$6,170	
20	1.663	0.2415	0.40	$5,910	
		20 YEAR TOTAL		$183,304	

Annual POTW Monitoring					$3,070
Year	Inflation	P/F	Discounted Inflation	Cost/Year	
1	1.040	0.8734	0.91	$2,789	
2	1.066	0.8163	0.87	$2,671	
3	1.093	0.7629	0.83	$2,559	
4	1.120	0.7130	0.80	$2,452	
5	1.148	0.6663	0.76	$2,348	
6	1.177	0.6227	0.73	$2,249	
7	1.206	0.5820	0.70	$2,155	
8	1.236	0.5439	0.67	$2,064	
9	1.267	0.5083	0.64	$1,977	
10	1.299	0.4751	0.62	$1,894	
11	1.331	0.4440	0.59	$1,815	
12	1.365	0.4150	0.57	$1,739	
13	1.399	0.3878	0.54	$1,665	
14	1.434	0.3624	0.52	$1,595	
15	1.469	0.3387	0.50	$1,528	
16	1.506	0.3166	0.48	$1,464	
17	1.544	0.2959	0.46	$1,402	
18	1.582	0.2765	0.44	$1,343	
19	1.622	0.2584	0.42	$1,287	
20	1.663	0.2415	0.40	$1,233	
		20 YEAR TOTAL		$38,230	

Total Present Value Costs for Monitoring Life of Project	**$1,230,383**

COOPER DRUM MONITORING COST (GW BDR)

PERFORMANCE MONITORING **$1,156,560**

Annual Cost	$50,285.22

Monitoring required for 23 years

24 Wells-quarterly sampling for 10 years (3 rounds x 10 yrs=30 events)
32 wells- annually for 23 years (= 23 events)
After 10 years sampling frequency reduced to semi-annual(= 13 events)
VOCs quarterly @ $100/sample
1,4-dioxane twice per yr @ $175 sample
MNA parameters annually @ $515 per sample
Labor and equipment @$290per well
(Includes Blaintech, technician, shipment, waste disposal)
(MNA includes chloride,nitrate, sulfate, sulfide, ethene/ethane/menthane,
plus field parameters, iron (II), pH, DO, ORP, Temp, conductivity)

Reporting will be don under performance monitoring after 10th year for remaining 13 years ($2.5K per rpt)

VOCs only (2 events /yr x 10years x 24 wells x [$100 + $290])= $187,200
VOCs and 1-4Dioxane (1 event/yr x 23 yr x 24 wells x [275 +290])= $311,880
MNA (1 event/yr x 23 yrs x 32 wells x [$515- $290])= $592,480
Reports (13 yrs x 2 rpt/yr x $2.5K/rpt)= $65,000

SOURCE AREA EXTRACTION AND INJECTION WELLS 3 YEARS **$23,220**

Annual Cost	$7,740.00

1 source area extraction well quarterly for 3 years (same analysis as ISCO MW's)

4/yr x 3 yr x $645= $7,740
2 source area injection wells quarterly for 3 years (same analyis as ISCO monitor well)
4/yr x 3 yrs x 2 wells x $645= $15,480

ISCO WDR **$188,870**

Annual Cost	$62,956.67

Duration of WDR permit will be for 3 years at which time sampling will shift to

Performance Monitoring Program
10 wells quarterly sampling for 3 years
(6 monthly, one baseline, 10 additional sampling events = 17 total events)

Assumes 6 of 10 wells will be sampled as part of performance Monitoring program)

Quarterly reporting ($1.5K per report, $4K for final rpt)
Analysis $645 per sample(includes VOCs, 1,-4 dioxane, chloride, bromide, nitrate, nitrite, o-phosphate, sulfate, sulfide, TOC, TOC, TDS, TSS, boron,barium, calicium, magnesium, manganese, potassium, sodium,PP metals annually,and field parameters)
17 events x 4 wells x ($645+$290)=$63,580
5 events x 6 wells x ($645+290)= $28,050
12 events x 6 wells x ($645 -$100vocs= $545)=$39,240
36 reports plus one final = $58,000

HRC WDR **$170,500**

Annual Cost	$34,100.00

Duration of WDR permit will be for 10 years at which time sampling and

reporting will shift to Performance Monitoring Program
10 wells - quarterly sampling for 5 years (= 20 sampling events)
Assumes 6 of 10 wells will be sampled under performance monitoring program
Quarterly reporting ($1.5K per report, $4K for final rpt)
Analytical $715 per well (includes VOCs, 1,-4 dioxane, ethene/ethane, carbon dioxide, methane, chloride, nitrate, nitrite, o-phosphate, sulfate, sulfide, alkalinity, TOC, TDS, BOD, boron, calcium, magnesium, iron, potassium, sodium,and field parameters)
20 events x 4 wells x ($715+$290)= $80,400
5 events x 6 wells x ($715 - $515 = $200)=$6,000
5 events x 6 wells x ($715 - $275 = $440)=$13,200
10 events x 6 wells x ($715 - $100 = $615)= $36,900
20 reports plus one final, (41 rpts x $1.5K)= $34,000

TREATMENT SYSTEM 20 YEAR **$294,400**

Annual Cost	$14,720.00

4/yr x 20yrs x 2 wells x $715= $114,400
Treatment plant monitoring influent and effluent locations monthly for 20 years (VOCs and 1,4-dioxane only)
12/yr x 20 yrs x 2 x $275= $132,000
Intermediate treatment plant – 2 locations- monthly - 20 years- VOCs only
12/yr x 20 yrs x 2 x $100=$48,000
All sampling performed during O&M.
Source area injection and extraction wells
Sample Reporting included in specific WDR

POTW **$61,400**

Annual Cost	$3,070.00

System operation 20 years
1 sampling location COD and TSS, and VOC analysis only
COD ($20) and TSS ($25) bi-monthly
6/yr x 20 yrs x $45=$5,400
VOC ($100) quarterly
4/yr x 20 yrs x $100= $8000
Quarterly reports ($600each)
4/yr x 20 yrs x $600=$48,000

TOTAL MONITORING COST **$1,894,950**

NEW WELL INSTALLATION **$162,800**

13 new wells at $100/foot (1300 ft)=$130K
Includes material and development (4-inch pvc/12-inch boring)
Labor 195 hr x $90/hr + 15% = $20.18K
expenses $3.3K
Waste disposal 1300ft x 0.82 ft3/12-inch= 67 tons
$100/ton x 67 tons = $6.7K$
Permits $200 each x 13=- $2,600

Source Area Treatment System Equipment Service Life and Replacement Costs

Equipment	Expected Service Life[1] (years)	Estimated Replacement Purchase Price[2]	Estimated Replacement Labor Cost[3]	Total Estimated Replacement Cost	Expected replacement interval	Extended cost
Subsystem: Influent Tanks						
EP-1 Injection Pump	7	$560	$210	$770	1	$770
T-100 Holding Tank	20	$5,500	$2,120	$7,620	0	$0
Subsystem: Advanced Oxidation System						$0
Advanced Oxidation System	7	$730	$210	$940	1	$940
Subsystem: Carbon Vessels					0	$0
Primary Liquid Phase Carbon Vessel	20	$4,257	N/A[4]	$4,257	0	$0
Secondary Liquid Phase Carbon Vessel	20	$4,257	N/A[4]	$4,257	0	$0
GWTP Effluent Flow Meter	7	$5,000	$2,120	$7,120	1	$7,120
Subsystem: GWTP Controls						
Main Control Panel Central Processing Unit	5	$2,000	$3,560	$5,560	3	$16,680
Advanced Oxidation System Control Panel Radio	7	$2,000	$420	$2,420	1	$2,420
SCADA Computer	5	$1,200	$2,000	$3,200	3	$9,600
GWTP Programmable Logic Controller	20	$11,000	N/A4	$11,000	0	$0
Subsystem: Submersible Pump/Motor Assemblies						
SEW-1 pump and motor assembly	10	$1,033	$3,340	$4,373	1	$4,373
Subsystem: Extraction Well Flow Meters						
SEW-1 flow meter	10	$2,400	$420	$2,820	1	$2,820
Subsystem: Extraction Well Hardware						
Check Valve	10	$75	$140	$215	1	$215
Gate Valve	10	$100	$175	$275	1	$275
Well Vault Sump Pump	10	$110	$35	$145	1	$145
Miscellaneous Hardware (e.g., pressure gauges, ball valves, and GFCI outlets)	10	$100	$70	$170	1	$170
Subsystem: Extraction Well Controls						$0
TimeMark Controller	10	$150	$175	$325	1	$325
Submersible Motor Starter	10	$125	$210	$335	1	$335
Control Panel Breaker	10	$150	$210	$360	1	$360
					Total	$46,548

Notes:

1. Expected service life is based on O&M contractor's experience and information obtained from equipment manufacturers.
2. Estimated replacement purchase prices were obtained from manufacturers or vendors, and are in 2007 dollars.
3. Estimated replacement installation cost includes labor costs, subcontractor costs, and equipment rental costs. The following costs
4. Labor costs are not estimated for this activity due to extensive project coordination requiredor a lifecycle greater than 100 years.
5. Estimated replacement installation cost includes labor costs and subcontractor costs. The following costs were used in generating

SEW = source area extraction well

Downgradient Treatment System Equipment Service Life and Replacement Costs

Equipment	Expected Service Life[1] (years)	Estimated Replacement Purchase Price[2]	Estimated Replacement Labor Cost[3]	Total Estimated Replacement Cost	Expected replacement interval	Extended cost
Subsystem: Bioremediation Barrier						
Biobarrier	7		$210	$210	0	$0
Effluent Flow Meter	7	$5,000	$2,120	$7,120	6	$42,720
Subsystem: Submersible Pump/Motor Assemblies						
DEW-1 pump and motor assembly	10	$1,220	$3,340	$4,560	1	$4,560
DEW-2 pump and motor assembly	10	$1,220	$3,340	$4,560	1	$4,560
Subsystem: Extraction Well Flow Meters						
DEW-1 flow meter	10	$2,400	$420	$2,820	1	$2,820
DEW-2 flow meter	10	$2,400	$420	$2,820	1	$2,820
Subsystem: Extraction Well Hardware						
Check Valves	10	$75	$140	$215	2	$430
Gate Valves	10	$100	$175	$275	2	$550
Well Vault Sump Pumps	10	$110	$35	$145	2	$290
Miscellaneous Hardware (e.g., pressure gauges, ball valves, and GFCI outlets)	10	$100	$70	$170	2	$340
Subsystem: Extraction Well Controls						
TimeMark Controller	10	$150	$175	$325	2	$650
Submersible Motor Starter	10	$125	$210	$335	2	$670
Control Panel Breaker	10	$150	$210	$360	2	$720
					Total	$61,130

Total replacement cost
Annual $5,384

Notes:

1. Expected service life is based on O&M contractor's experience and information obtained from equipment manufacturers.
2. Estimated replacement purchase prices were obtained from manufacturers or vendors, and are in 2007 dollars.
3. Estimated replacement installation cost includes labor costs, subcontractor costs, and equipment rental costs. The following costs
4. Labor costs are not estimated for this activity due to extensive project coordination requiredor a lifecycle greater than 100 years.
5. Estimated replacement installation cost includes labor costs and subcontractor costs. The following costs were used in generating

SEW = source area extraction well

Item	Cost	
Check valve	$	75
Gate Valve	$	100
Sump Pumps	$	110
Miscellaneous	$	100
Drop Pipe - 1.5" Stainless	$	7
Drop Pipe - 2" Stainless	$	9
Drop Pipe - 3" Stainless	$	30
Drop Pipe threading	$	10
TimeMark	$	150
Submersible Motor Starter	$	125
Control Panel Breakers	$	150
LABOR	$	70
Subcontractor	$	100
Redevelopment - Sub	$	2,500
Crane	$	1,000
Manlift	$	700
Forklift	$	500

Notes
EW Assumptions
assume labor = 12 hours per submersible replacement, with $2,500 for sub costs
assume flow meter replacement labor = 6 hours

OU 1 and OU 2
Remedial Action Schedule
Cooper Drum Company Superfund Site

ID	Task Name	Duration	Predecessors
1	**Cooper Drum Remedial Actions**	**6723 days**	
2	**OU 1 (Groundwater) RA**	**6674 days**	
3	**RA Solicitation**	**54 days**	
4	Post solicitation	30 edays	
5	Receive proposals	0 days	4
6	Review soliciatation proposals	10 days	5
7	Award solicitation	0 days	6
8	Notice-to-Proceed	0 days	7FS+30 edays
9	Preparation of Draft Plans (RAWP, SAP, HASP)	60 days	8
10	Regulatory Agencies Review of Draft Plans	60 edays	9
11	Incorporate Comments and Submit Draft Final Plans	30 days	10
12	Regulatory Agencies Review of Draft Final Plans	60 edays	11
13	Incorporate Comments and Submit Final Plans	30 days	12
14	Permitting for RA (WDR, NPDES, Building Dept, etc)	90 edays	13FF
15	Installation of Remedy	30 days	14
16	Initial Startup and Testing	15 days	15
17	**Full Scale O&M of RA Remedy**	**5995 days**	
18	Source Area in situ ISCO system	1095 edays	16
19	Downgradient P&T System	8395 edays	16
20	**Biobarrier Injections**	**561 days**	
21	First Injection	30 edays	19SS+30 edays
22	Second Injection	25 edays	21FS+730 edays
23	Remedy Performance Monitoring	8395 edays	16
24	Site Closure Work Plan	30 days	23
25	Site Closure Sampling/Monitoring	365 edays	24FS+30 edays
26	Site Closure Monitoring Results Report	30 days	25
27	Receive Site Closure	0 days	26FS+45 edays
28	**OU 2 (Soil) RA**	**1620 days**	
29	**RA Solicitation**	**62 days**	
30	Post solicitation	30 days	
31	Receive proposals	0 days	30
32	Review soliciatation proposals	10 days	31
33	Award solicitation	0 days	32
34	Notice-to-Proceed	0 days	33FS+30 edays
35	Preparation of Draft Plans (RAWP, SAP, HASP)	60 days	34
36	Regulatory Agencies Review of Draft Plans	60 edays	35
37	Incorporate Comments and Submit Draft Final Plans	30 days	36
38	Regulatory Agencies Review of Draft Final Plans	60 edays	37
39	Incorporate Comments and Submit Final Plans	30 days	38
40	Permitting for RA (WDR, NPDES, Building Dept, etc)	90 edays	39FF
41	Installation of Remedy	30 days	40
42	Initial Startup and Testing	15 days	41
43	Full Scale O&M of RA Remedy	1095 edays	42
44	**Remedy STOP Evaluation**	**394 days**	
45	Site Closure Sampling/Monitoring	550 edays	43
46	Submit Remedy STOP Report	0 days	44FS+60 days
47	Receive Approval to STOP OU 2 RA	0 days	46FS+45 edays

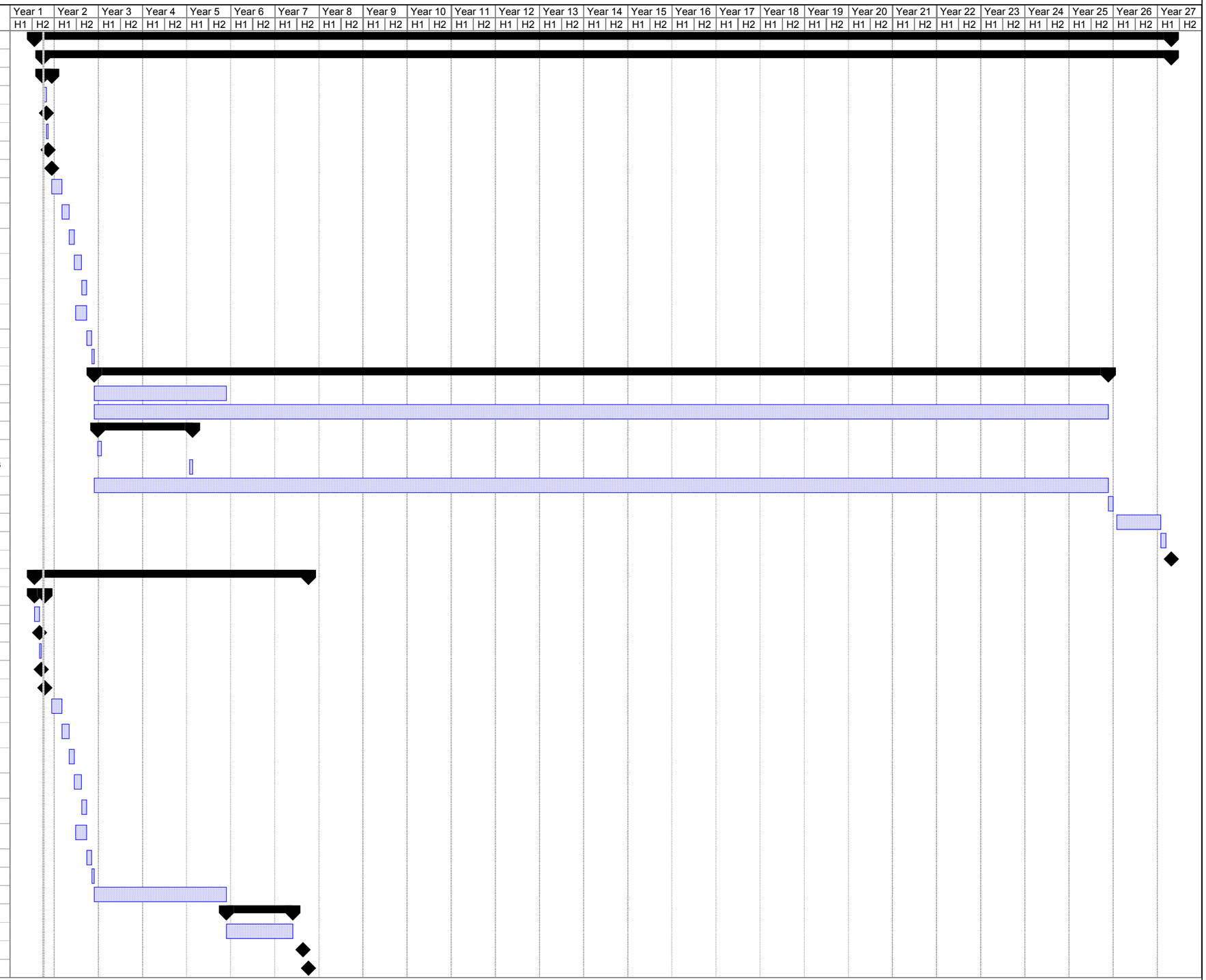

UNITED STATES DISTRICT COURT
CENTRAL DISTRICT OF CALIFORNIA
WESTERN DIVISION

UNITED STATES OF AMERICA, & STATE OF CALIFORNIA,	)	CIV. NO.:
Plaintiffs,	)	
v.	)	CONSENT DECREE
AC PRODUCTS, INC., et al.	)	
Defendants.	)	

Appendix D-2

Soil Remedial Design Report

URS

September 18, 2007

Mr. Eric Yunker
Superfund Project Manager
U.S. Environmental Protection Agency, Region IX
75 Hawthorne Street (SFD-7-3)
San Francisco, CA 94105

Subject: **RAC IX Contract No. W-98-225**
Cooper Drum Company WA No. 247-RDRD-091N
Transmittal of Final OU2 Soil Remedial Design Report

Dear Mr. Yunker:

This letter transmits two copies of the OU2 Soil Remedial Design Report for the Cooper Drum Company Superfund Site in South Gate, California. DTSC and EPA Region 9 comments have been incorporated into the final document.

If you have any questions or require further information, please contact me at (916) 679-2049.

Sincerely,

URS Group, Inc.

Don Gruber
Task Manager

Edmund D. Tarter
Project Engineer

REGISTERED PROFESSIONAL ENGINEER
EDMUND D. TARTER
No. 64825
Exp. 6/30/09
CIVIL
STATE OF CALIFORNIA

Attachment

cc: Lori Parnass DTSC (1 copy w/attachment)
Site Repository, South Gate, CA (1 copy w/attachment)
Project File (w/attachments)
Chron File (w/o attachments)

URS Group, Inc.
Crown Corporate Center
2870 Gateway Oaks Drive, Suite 150
Sacramento, CA 95833-3200
Tel: 916.679.2000
Fax: 916.679.2833

J:\Cooper Drum\Tarter\Soils BDR\Report_PreFinal\Final RDR trans_ltr_EPAR9.doc

18500147.08010

SOIL REMEDIAL DESIGN REPORT

OPERABLE UNIT 2

COOPER DRUM COMPANY SUPERFUND SITE

Prepared for:

Contract No. 68-W-98-225/WA No. 047-RDRD-091N
U.S. Environmental Protection Agency, Region IX
75 Hawthorne Street
San Francisco, California 94105

Prepared by:

URS Group, Inc.
2870 Gateway Oaks Drive, Suite 150
Sacramento, California 95833

September 18, 2007

DISCLAIMER

This design report has been prepared for the United States Environmental Protection Agency by URS Group, Inc. (URS). This document is intended to transmit the design requirements from information collected by URS during the remedial design field sampling efforts initiated in May 2003 at the Cooper Drum Company Superfund Site.

The limited objective of this design report, the ongoing nature of the project, along with the evolving knowledge of site conditions and chemical effects on the environment and human health, must all be considered when evaluating the design because subsequent facts may become known that may make this document premature or inaccurate.

This design report has been prepared by URS under the review of registered professionals. The conclusions and recommendations in this design are based on URS' data evaluation. The interpretation of the data and the conclusions drawn were governed by URS experience and professional judgment.

TABLE OF CONTENTS

Page

ES.0 EXECUTIVE SUMMARY ES-1
ES.1 CONTAMINANTS OF CONCERN AND CLEANUP GOALS ES-1
ES.2 ROD SELECTED REMEDY FOR OU 2 SOIL ES-2
ES.3 DESIGN STRATEGY FOR IMPACTED SOIL ES-2
ES.3.1 Soil Vapor and Perched Aquifer ES-2
ES.3.2 Soil ES-3

1.0 INTRODUCTION 1-1
1.1 PURPOSE AND OBJECTIVES 1-1
1.2 SITE DESCRIPTION AND HISTORY 1-1
1.2.1 Site Description 1-1
1.2.2 Site History 1-2
1.2.3 Current Site Operations 1-2
1.3 REMEDIAL DESIGN REPORT ORGANIZATION 1-3

2.0 REMEDIAL INVESTIGATION SUMMARY 2-1
2.1 PREVIOUS INVESTIGATIONS 2-1
2.2 SUPPLEMENTAL RI DATA 2-3
2.3 SUMMARY OF RECORD OF DECISION 2-4
2.3.1 Selected Action for Soil 2-4
2.3.2 Detailed Description of the ROD-Selected Remedy 2-5
2.3.3 Rationale for the Selected Remedy 2-5
2.4 SUMMARY OF OU 1 GROUNDWATER REMEDY 2-6
2.5 COMPLIANCE WITH APPLICABLE OR RELEVANT AND APPROPRIATE REQUIREMENTS (ARARS) 2-6

3.0 PROJECT APPROACH AND DESIGN OBJECTIVES 3-1
3.1 PROJECT APPROACH AND DESIGN OBJECTIVES 3-1
3.2 DESIGN STRATEGY 3-1
3.2.1 Soil Vapor 3-2
3.2.2 Soil 3-2
3.2.3 Perched Groundwater 3-2

4.0 DESIGN FOR SOIL REMOVAL ACTION 4-1
4.1 SITE SOIL DESIGN 4-1
4.2 PRIMARY EXCAVATION AREA AND VOLUME 4-1
4.3 EXCAVATION CONFIRMATION FIELD SAMPLING PLAN 4-2
4.4 STORAGE OF EXCAVATED MATERIAL AND SOIL PROFILE SAMPLING 4-3
4.5 TRANSPORTATION AND DISPOSAL OF EXCAVATED MATERIAL 4-3
4.5.1 Soil and Concrete/Debris Transportation 4-3
4.5.2 Directions to Designated Disposal Facility 4-4
4.6 SPILL RESPONSE 4-4
4.7 SITE RESTORATION 4-5

5.0 DESIGN FOR DPE REMEDIAL ACTION 5-1
5.1 DESIGN STRATEGY 5-1
5.1.1 Pilot Test Summary 5-1

TABLE OF CONTENTS (Continued)

Page

5.1.2 SVE Test Results 5-1
5.1.3 Methodology and Calculation of SVE ROI and Flow Rate 5-2
5.1.4 Design Strategy 5-3
5.2 VADOSE ZONE DESIGN 5-3
5.2.1 DPE Well Placement 5-4
5.2.2 Design Flow Rates 5-4
5.2.3 Basis of Design for DPE Wells and Treatment Compound 5-5
5.2.4 Basis of Design for Vapor Monitor Well Installation 5-6
5.3 PERCHED GROUNDWATER DESIGN 5-7
5.4 DETAILED DESIGN OF DUAL-PHASE EXTRACTION COMPONENTS 5-7
5.4.1 DPE Well Details 5-7
5.4.2 Blower Design and Selection 5-7
5.4.3 Groundwater Extraction Pump Design 5-8
5.4.4 Air Emission Controls 5-8
5.4.5 Extracted Groundwater Treatment 5-8
5.4.6 Manifold and Piping Design 5-9
5.4.7 Treatment System Controls and Monitoring Points 5-9
5.4.8 Instrumentation 5-10
5.4.9 Electrical Controls 5-11
5.5 DESIGN ASSUMPTIONS FOR DPE SYSTEM OPERATION 5-12
5.5.1 VOC Mass Estimates to Cleanup 5-12
5.5.2 System Performance Sampling 5-12
5.5.3 Post-Remediation Confirmation Compliance Monitoring 5-13
5.6 TREATMENT PROCESS OPERATION DETAILS 5-13
5.6.1 Media, Byproducts, and Process Rates 5-13
5.6.2 Waste Streams 5-14
5.6.3 Project Quality Checklist, Pertinent Codes, and Standards 5-14
5.6.4 Other Technical Factors 5-14

6.0 CONSTRUCTION AND IMPLEMENTATION 6-1
6.1 PLANS 6-1
6.2 DESIGN DRAWINGS 6-1
6.3 SPECIFICATIONS 6-1
6.4 SCHEDULE 6-1
6.5 COST ESTIMATE 6-2
6.6 CONTRACTOR QUALIFICATIONS 6-2
6.7 COOPER DRUM PROPERTY SITE ACCESS 6-2
6.8 OFF-SITE EASEMENT AND ACCESS 6-2

7.0 ENVIRONMENTAL AND PUBLIC IMPACT REDUCTION PLAN 7-1
7.1 SECURITY AND FENCING 7-1
7.2 ELECTRICAL GROUNDING 7-1
7.3 VISUAL SCREENING 7-1
7.4 SPILL CONTAINMENT 7-1

8.0 REFERENCES 8-1

LIST OF APPENDICES

APPENDIX A: Contaminant of Concern (COC) Chemical Property Summaries
APPENDIX B: Remedial Design Tech Memo for Field Sampling Results (July 2006) Data, Figures, and Tables
APPENDIX C: ARARs Summary, Recorded Land Use Covenants Fact Sheet and Text of Regulations
APPENDIX D: Excavation Work Plan
APPENDIX E: Soil Excavation Volume Calculations
APPENDIX F: Sample Analysis Plan
APPENDIX G: SVE Pilot Test Data
APPENDIX H: Dual-Phase Extraction System Design Calculations
APPENDIX I: URS Technical Memorandum – Perched Aquifer Pump Test
APPENDIX J: Mechanical Equipment Technical Information
APPENDIX K Construction Quality Control Plan
APPENDIX L Generalized O&M Manual for DPE

LIST OF TABLES

(Provided at the end of this report.)

2-1 Soil Contaminants of Concern and Cleanup Levels

4-1 Summary of Excavation Areas
4-2 Design Assumptions for Soil Removal Action

5-1 DPE-1 Test Data
5-2 DPE-7 Test Data
5-3 Soil Permeability Test Results, DPE-1
5-4 Soil Permeability Test Results, DPE-7
5-5 Distance and Direction of Vapor Monitor Points Relative to Dual-Phase Extraction Wells
5-6 Summary for DPE with Catalytic Oxidation/ Caustic Scrubber Emission Control System and Residual Sampling Frequency

LIST OF FIGURES

(Provided at the end of this report.)

1-1 Site Location Map
1-2 Site Map and Piping Layout

2-1 Generalized Geologic Cross-Section B-B´

3-1 Soil Sampling Results for PAHs, Former Hard-Wash area
3-2 Soil Sampling Results for PCBs, Former Hard-Wash area
3-3 Soil Sampling Results for Lead, Former Hard-Wash area
3-4 Soil Sampling Results for Lead, Drum Processing Area
3-5 Soil Sampling Results for PAHs, Drum Processing Area
3-6 PCE Soil Gas Contours at 10 feet bgs
3-7 PCE Soil Gas Contours at 20 feet bgs
3-8 PCE Soil Gas Contours at 30 feet bgs
3-9 TCE Soil Gas Contours at 10 feet bgs
3-10 TCE Soil Gas Contours at 20 feet bgs
3-11 TCE Soil Gas Contours at 30 feet bgs
3-12 1,2-DCE Soil Gas Contours at 10 feet bgs
3-13 1,2-DCE Soil Gas Contours at 20 feet bgs
3-14 1,2-DCE Soil Gas Contours at 30 feet bgs
3-15 Vinyl Chloride Soil Gas Contours at 10 feet bgs
3-16 Vinyl Chloride Soil Gas Contours at 20 feet bgs
3-17 Vinyl Chloride Soil Gas Contours at 30 feet bgs
3-18 1,1-DCA Soil Gas Contours at 10 feet bgs
3-19 1,1-DCA Soil Gas Contours at 20 feet bgs
3-20 1,1-DCA Soil Gas Contours at 30 feet bgs
3-21 Task Flow for SVE/DPE System Design

4-1 Primary Excavation Area Former Hard-Wash area
4-2 Primary Excavation Area Former Drum Processing Area

5-1 Location of Cross-Sections
5-2 A-A' Cross-Section, Drum Processing Area
5-3 B-B' Cross-Section, Former Hard-Wash area
5-4 C-C' Cross-Section, Former Hard-Wash area
5-5 Soil Vapor Extraction Test (Hard-Wash area) Vacuum Response at End of Test (Inches H_2O)
5-6 Soil Vapor Extraction Test (Drum Processing Area) Vacuum Response at End of Test (Inches H_2O)
5-7 Determining Radius of Influence Calculation (SVE 10 feet bgs)
5-8 Determining Radius of Influence Calculation (SVE 30 feet bgs)
5-9 Hard-Wash Area, 1,000 ppbv VOCs at 10 feet bgs
5-10 Hard-Wash Area, 1,000 ppbv VOCs at 20 feet bgs
5-11 Hard-Wash Area, 1,000 ppbv VOCs at 30 feet bgs
5-12 Drum Processing Area, 1000 ppbv VOCs at 10 feet bgs
5-13 Drum Processing Area, 1,000 ppbv VOCs at 20 feet bgs
5-14 Drum Processing Area, 1,000 ppbv VOCs at 30 feet bgs
5-15 Flow Rate vs. Vacuum during Pilot Test
5-16 DPE Well Configuration

ACRONYMS AND ABBREVIATIONS

AOC	Administrative Order of Consent
ARAR	applicable or relevant and appropriate requirements
ASTM	American Society for Testing and Materials
BDR	basis of design
bgs	below ground surface
CatOx	catalytic oxidation
CCR	California Code of Regulations
CERCLA	Comprehensive Environmental Response, Compensation, and Liability Act
cfm	cubic feet per minute
CFR	Code of Federal Regulations
COC	contaminant of concern
CQCP	Construction Quality Control Plan
cy	cubic yard
DCA	dichloroethane
DCE	dichloroethene
DCP	dichloropropane
DL	detection limit
DPA	drum processing area
DPE	dual-phase extraction
DTSC	California Department of Toxic Substances Control
EPA	United States Environmental Protection Agency
FSP	field sampling plan
GAC	granular activated carbon
gpm	gallons per minute
HASP	Health and Safety Plan
hp	horsepower
HRA	health risk assessment
HRC	hydrogen release compound
HWA	hard-wash area
I&C	instrumentation and control
in. H_2O	inches of water
in. Hg	inches of mercury
ISCO	in situ chemical oxidation
LADHS	Los Angeles County Department of Health Services
LACSD	Los Angeles County Sanitation District

ACRONYMS AND ABBREVIATIONS (Continued)

lb/day	pounds per day
LEL	lower explosive limit
LGAC	liquid-phase granular activated carbon
MCL	California maximum contaminant level
mg/kg	milligrams per kilogram
NCP	National Oil and Hazardous Substances Pollution Contingency Plan
NEC	National Electrical Code
NFPA	National Fire Protection Association
NPL	National Priorities List
O&M	operation and maintenance
OU	operable unit
PAH	polycyclic aromatic hydrocarbon
PCE	tetrachloroethene
PCB	polychlorinated biphenyl
PFD	process flow diagram
PLC	programmable logic controller
POC	point of contact
ppb	parts per billion
ppbv	parts per billion by volume
ppmv	parts per million by volume
PRP	potentially responsible party
PVC	polyvinyl chloride
QA	quality assurance
RA	remedial action
RAO	remedial action objective
RAWP	Remedial Action Work Plan
RD	remedial design
RDR	remedial design report
RI/FS	remedial investigation/feasibility study
ROD	record of decision
ROI	radius of influence
RPO	remedial process optimization
RWQCB	Regional Water Quality Control Board
SAP	Sampling and Analysis Plan
SARA	Superfund Amendments and Reauthorization Act of 1986
SCAQMD	Southern California Air Quality Management District
scfm	standard cubic feet per minute
SVE	soil vapor extraction

ACRONYMS AND ABBREVIATIONS (Continued)

SVOC	semivolatile organic compound
TBC	to be considered
TBD	to be determined
TCE	trichloroethene
TCP	trichloropropane
TDS	total dissolved solids
TEFC	totally enclosed, fan-cooled
URS	URS Group, Inc.
VC	vinyl chloride
VGAC	vapor granular activated carbon
VOC	volatile organic compound
VP	vapor monitor points
WDR	Waste Discharge Requirement
XRF	X-ray fluorescence
°C	degrees Celsius
µg/L	micrograms per liter

ES.0 EXECUTIVE SUMMARY

In June 2001, the United States Environmental Protection Agency (EPA) added the Cooper Drum Company Site (Site) to the National Priorities List (NPL) of hazardous waste sites requiring remedial action (RA). This Remedial Design Report (RDR) presents the remedial design for the selected RA for the soil Operable Unit 2 (OU 2) at the Site, located in South Gate, Los Angeles County, California. The remedial design (RD) for Operable Unit 1 (OU 1), or the contaminated site groundwater, is presented in a separate RDR.

The OU 2 (alternatively referred to as "impacted soil" or simply "soil" throughout this report) RA includes dual-phase extraction (DPE) for subsurface soils down to the water table, excavation of near surface soils, and institutional controls where excavation is not feasible.

This RDR provides the design criteria, including the assumptions and parameters used in developing the RD for OU 2 soil, and the estimated costs and schedule for implementation of the RA. The soil RD closely follows the selected remedy for soil, as delineated in the Site Record of Decision (ROD) (EPA, 2002).

ES.1 CONTAMINANTS OF CONCERN AND CLEANUP GOALS

The ROD identifies the contaminants of concern (COCs) as volatile organic compounds (VOCs) in soil gas and non-VOCs, including lead, polycyclic aromatic hydrocarbons (PAHs), and polychlorinated biphenyls (PCBs), in soil.

The ROD specifies the cleanup goals for VOCs as "to be determined (TBD)," pending collection of soil gas samples after implementation of the RA. The soil gas concentrations are to be used in the VLEACH (or comparable) model to predict impact to groundwater, and in the Johnson and Ettinger model to estimate indoor air concentrations. Remediation of soil gas is to continue until predicted impacts to groundwater are at levels less than drinking water standards, and predicted indoor air concentrations are less than levels that would pose a human health risk.

The ROD specifies the cleanup goal for PCBs in soil as 870 parts per billion (ppb). This level was back-calculated by applying residential exposure parameters used in the Site human health risk assessment and a target health risk level of 1 in 100,000. The ROD also describes the cleanup level for PAHs in soil as being based on the upper tolerance limit background benzo(a)pyrene-toxicity equivalent (B(a)P-TE) concentration for the southern California PAH data set, which is 900 ppb B(a)P-TE. Finally, the ROD specifies a cleanup goal for lead of 400 parts per million (ppm). This level was established based on an evaluation of lead uptake of children's blood.

Post-ROD supplemental investigations of the Site indicated the presence of elevated levels of 1,4-dioxane (a semivolatile organic compound [SVOC]) in the perched aquifer and shallow groundwater. A cleanup goal for 1,4-dioxane was not specified in the ROD. However, other regulatory criteria can be used as a basis for cleanup. The drinking water preliminary remediation goal (PRG) for 1,4-dioxane is 6.1 micrograms per liter (µg/L), and the Department of Health Services (DHS) action level for this compound is 3 µg/L. The cleanup goal for 1,4-dioxane will be assessed during implementation of the RA.

ES.2 ROD SELECTED REMEDY FOR OU 2 SOIL

The remedial action objectives (RAOs) for Cooper Drum, as stated in the ROD, are to protect human health and the environment from exposure to contaminated soil, groundwater, and indoor air, and to restore the groundwater to a potential beneficial use as a drinking water source. The ROD-selected remedy meets these RAOs through treatment of soil and groundwater contaminated with COCs.

The ROD specifies the following remedial design strategy for remediation of contaminated soil at the Site:

- To remove the potential threat to human health, the selected remedy for soil will use DPE for treatment of VOCs in soil.
- Other non-VOC soil contaminants, including PAHs, PCBs, and lead, will be excavated for disposal.
- Institutional controls will be implemented to prevent exposure to soil contaminants where excavation is not feasible.

ES.3 DESIGN STRATEGY FOR IMPACTED SOIL

Two depth intervals will require remedial action: surface to near-surface soils impacted with non-VOCs, and a deeper vadose zone impacted with VOCs and 1,4-dioxane (perched aquifer only).

The soil RD is divided by affected media: soil vapor (gas) and perched groundwater and soil. The vadose zone and the perched aquifer are impacted in two areas of the Site: the former hard wash area (HWA) and the drum processing area (DPA).

ES.3.1 Soil Vapor and Perched Aquifer

The RD uses DPE to simultaneously extract soil vapors and dewater the perched aquifer, which in turn expands the effect of soil vapor extraction in the dewatered zone. Extracted soil vapor will be treated at an on-site treatment system, using catalytic oxidation, followed by acid scrubbing. When influent vapor concentrations decrease to below approximately 150 parts per million by volume (ppmv) the emission controls system will be switched to granular activated carbon (GAC)

DPE will be performed prior to excavation of the shallow soils.

The DPE design also includes dewatering of the perched aquifer, which is continuous in the HWA and DPA, and occurs from approximately 35 to 40 feet below ground surface (bgs). The perched aquifer is a stratified layer within the Bellflower Aquiclude, which also includes the deeper Gaspur and Exposition aquifers. The extracted water, at an estimated design rate of 5 gallons per minute (gpm), from the perched aquifer will be conveyed to the treatment compound where it will be treated in an advanced oxidation process unit (mainly to treat 1,4-dioxane), followed by a liquid-phase granular activated carbon (LGAC) polishing unit. The treated groundwater will then be discharged via two mechanisms: injection (using two injection wells located in the vicinity of the HWA) into the impacted Gaspur aquifer, and discharge to the sanitary sewer. (The same treatment and discharge sequence will be used to treat extracted water from the

impacted Gaspur aquifer as part of the groundwater RA; therefore, the water from the two aquifers will be indistinguishable during treatment and discharge processes.)

Removal of VOCs from soil will prevent the downward migration of these compounds at concentrations that would impact groundwater at levels greater than drinking water standards, or their upward migration at concentrations that would cause indoor health risks. Dewatering and treatment of the impacted water from the perched aquifer will expose more of the vadose zone for vapor extraction.

Two existing soil vapor extraction (SVE) wells and four existing vapor monitor points are incorporated in the RD. However, each existing SVE well is to be converted to a DPE well by installing a well with a submersible pump (lowered to the perched aquifer) within approximately 5 feet of the SVE well. Inside each DPE well, extracted water will be conveyed via a water outlet and extracted vapor will be transferred via a vapor outlet to the treatment compound. This same design is used in all (new) DPE wells. (See Drawing P-1, which shows the process flow for the soil remediation system.)

SVE tests at the Site indicate the SVE radius of influence (ROI) is approximately 55 feet. Based on this ROI estimate, and using the 1,000 parts per billion by volume (ppbv) composite soil gas VOC plume as a conservative boundary for the area requiring RA, seven new DPE wells (five new wells in the HWA and two new wells in the DPA) also are included in the RD. The SVE depth interval is from approximately 10 to 30 feet bgs. Correspondingly, the RD includes installation of 13 new vapor monitor wells (nine in the HWA and four in the DPA), mostly within 25 to 50 feet from the SVE wells, with monitoring depths at 10, 20, and 30 feet bgs.

ES.3.2 Soil

The RD includes the removal of Site surface and near surface soil that is impacted with non-VOCs at levels exceeding the cleanup goals, as described in Section ES.1.

Initial soil removal activities will consist of four excavation areas (two areas each in the HWA and DPA) to maximum depths ranging from 2 feet bgs to 5 feet bgs. Excavation will be conducted to 5 feet bgs because the main concern is to prevent direct exposure to near surface contaminated soil. For soils deeper than 5 feet, the ROD allows, “implementation of institutional controls for soil contaminated with non-VOCs in areas where excavation is not feasible, such as under existing structures.”

Confirmation soil samples will be collected at the excavation areas (the excavation walls and floor) to ensure that all impacted soils are removed from the Site. Pending the confirmation sampling analytical results, additional excavation of Site soils may be necessary. All excavated soils will be transported and disposed of at an approved off-site facility. All excavated areas will be backfilled with clean soil material.

Removal of non-VOCs to the health-based cleanup levels will protect receptors at or near the site during ongoing and future activities. However, institutional controls will be implemented for soil contaminated with non-VOCs in areas where excavation is not feasible, such as under existing structures. Therefore, hazardous waste will remain at the property at levels not suitable for unrestricted use of the land. In this case, institutional controls will be implemented in the form of a State Land Use Covenant with the property owner. The Covenant shall conform with the requirements of pursuant to Civil Code section 1471, Health and Safety Code section 25355.5 and the California Code of Regulations, title 22, section 67391.1.

1.0 INTRODUCTION

In June 2001, the United States Environmental Protection Agency (EPA) added the Cooper Drum Company Site (Site) to the National Priorities List (NPL) of hazardous wastes sites requiring remedial action. URS Group, Inc. (URS) completed a remedial investigation/feasibility study (RI/FS) report for the Site in May 2002. The RI/FS summarized previous investigations; the nature and extent of contamination; a human health risk assessment (HRA); contaminants of concern (COCs); RI activities, conclusions, and recommendations; remedial action (RA) objectives; and an evaluation of RA alternatives. The selected RAs for soil and groundwater were documented in the Record of Decision (ROD). The site has been categorized into two operable units (OUs) for the remedial phase: OU 1 consists of the impacted groundwater and OU 2 consists of the impacted soil (and a perched aquifer) in the source area. This Remedial Design Report (RDR) describes the initial phase of remedial activity for the Site and presents the design for the soil (OU 2) RA.

1.1 PURPOSE AND OBJECTIVES

This RDR presents the design for two selected soil RAs at the Cooper Drum Company Site in South Gate, Los Angeles County, California. The two soil RAs include a limited surface to near-surface soil removal for soils impacted with heavy metals, polychlorinated biphenyls (PCBs) and polycyclic aromatic hydrocarbons (PAHs) and a deeper vadose zone RA for volatile organic compound (VOC)-impacted soil. This RDR provides the design criteria, including the design, assumptions, and parameters used in developing the remedial design (RD) for OU 2. The RAs were chosen in accordance with the Comprehensive Environmental Response, Compensation, and Liability Act (CERCLA) of 1980, as amended by the Superfund Amendments and Reauthorization Act of 1986 (SARA), and, to the extent possible, the National Oil and Hazardous Substances Pollution Contingency Plan (NCP). The decision was based on the Administrative Record file for the Cooper Drum Company Site and is detailed in the *Record of Decision, Cooper Drum Company, City of Southgate, California Record of Decision* (EPA, 2002). The implementation of the two soil RAs will be as follows: the deeper vadose zone RA will be completed prior to the shallow vadose zone RA. The work will be performed in this sequence to minimize worker exposure to site contamination during the shallow vadose zone RA.

1.2 SITE DESCRIPTION AND HISTORY

1.2.1 Site Description

The Site is located at 9316 South Atlantic Avenue in South Gate, Los Angeles County, California. It is identified as EPA ID CAD055753370 (Latitude 33 56’ 49” N, Longitude 118 11’42” W). The Site, which consists of 3.8 acres of mixed residential, commercial, and industrial land use, is 10 miles south of Los Angeles and approximately 1,600 feet west of the Los Angeles River (Figure 1-1). Site facilities include drum processing and storage areas, an office, a warehouse, and maintenance buildings. The former hard-wash area (HWA) is in the northeastern area of the Site, which includes a covered shed area. The drum processing building, which is referred to as the Drum Processing Area (DPA) in this report, is located along the southern property boundary. The Site layout, including the HWA and DPA, is shown on Figure 1-2. All Site buildings have concrete floors, and the entire facility has been asphalt-paved since

1986. The Tweedy School on the adjacent property has been closed since 1988 because of a concern that children attending the school could be exposed to contamination migrating off site.

1.2.2 Site History

Since 1941, the Site has been used by several companies to recondition and recycle used steel drums that once contained various industrial chemicals. The Cooper Drum Company operated from 1972 to 1992, reconditioning drums using a process that consisted of flushing and stripping the drums for painting and resale. Drum process waste was collected in open concrete sumps and trenches, resulting in releases to soil and groundwater beneath the site.

Following is a history of the Site use for the reconditioning and recycling of steel drums containing residual chemicals.

- Since 1941, the northern portion of the Site has been owned and operated by drum recycling companies. The use and ownership of the southern portion of the site prior to 1971 is unclear. The Cooper Drum Company purchased both parcels and operated the facility from 1972 until 1992.
- Reconditioning activities took place within the present-day DPA (Figure 1-2), in the central portion of the Site. When necessary, heavy duty cleaning, called “hard washing,” was performed in the northeastern portion of the site (the former HWA shown on Figure 1-2). Caustic fluids, generated by reconditioning and hard washing activities, and waste materials removed from inside the drums were collected in open concrete sumps and trenches. This led to the contamination of the soil and groundwater beneath the Site. Recent investigations have shown that most Site contamination can be traced to the HWA and the DPA.
- Beginning in 1987, the Cooper Drum Company facilities were retrofitted to provide better environmental protection. Closed-top steel tanks were installed over the sumps, and the trenches were replaced with hard piping. The former HWA was closed and replaced with a new hard-wash area in the DPA, which also provided hard piping and secondary containment.

The Cooper Drum Company continued to operate the facility until 1992. In 1992, the drum reconditioning business was sold to Waymire Drum Company, which operated the facility until 1996. Since 1996, Consolidated Drum Company has been the drum-reconditioning operator at the site. The facility was refitted to process plastic totes (large square containers). Consolidated Drum used an aboveground, enclosed system for containing liquids and wastes until their departure in 2003.

1.2.3 Current Site Operations

Consolidated Drum Company terminated its lease with the Cooper Trust in October 2003 and moved its operations to off-site facilities. All drum-recycling equipment and associated containment piping and tanks were removed from the site. Currently, the site is fully operational; however there are no longer any drum operations. As of April 2004, there were three new tenants on site, including a pallet storage company, a towing company, and an automotive repair and salvage company. This last company moved out as of May 26, 2006, and the pallet company expanded into the available space.

1.3 REMEDIAL DESIGN REPORT ORGANIZATION

This RDR includes the following:

- Section 1.0 A brief introduction of the site and the purpose of the RD
- Section 2.0 A summary of the remedial investigations performed at the site
- Section 3.0 The general project approach and design objective
- Section 4.0 The design for the non-VOC soil removal action
- Section 5.0 The design for the VOC-impacted vadose zone remediation
- Section 6.0 Construction and Implementation of the Remedial Design
- Section 7.0 The environmental and public impact reduction plan

2.0 REMEDIAL INVESTIGATION SUMMARY

2.1 PREVIOUS INVESTIGATIONS

From 1984 through 1989, the Los Angeles County Department of Health Services (LADHS) issued several Notices of Violation to the Cooper Drum Company as a result of incidents involving the release of hazardous substances at the Site. The LADHS required the Cooper Drum Company to conduct investigations of soil and groundwater. In 1989, the California Department of Health Services, now known as the Department of Toxic Substances Control (DTSC), also collected soil samples from under the DPA. The studies identified the following hazardous substances in soils at or near the Site:

- Tetrachloroethene (PCE) (a cleaning solvent)
- Trichloroethene (TCE) (a cleaning solvent)
- Dichloroethene (DCE) (a byproduct of TCE)
- Petroleum hydrocarbons
- PCBs
- PAHs
- Metals

Under direction of LADHS, consultants for the Cooper Drum Company excavated and removed contaminated soil from the property and from the adjacent Tweedy Elementary School, after caustic fluids leaked from trenches under the DPA building onto school property. To assess impacts to groundwater in the uppermost aquifer beneath the Site (approximately 40 to 80 feet below ground surface [bgs]), four monitoring wells were installed on site and one upgradient well was installed off site.

Groundwater beneath the Site was identified as contaminated with VOCs. In 1987, the City of South Gate closed four municipal water supply wells found to contain PCE. These wells are in South Gate Park, within 1,500 feet southwest of the site. At that time, the City listed the Cooper Drum Company as a possible source of the PCE contamination; however, recent investigations indicate that groundwater contamination found beneath the site did not contribute to the deeper groundwater contamination affecting those municipal wells. The groundwater contamination originating from the Site is moving to the south, not toward the municipal wells. It is confined to the upper aquifer and is not currently affecting any drinking water supplies in the City of South Gate because the municipal wells are completed in deeper aquifers.

The Tweedy School, on the adjacent property, was closed in 1988 because of the concern that children attending the school could be exposed to contamination migrating from the Site and from other industrial operations in the area.

Based on the discovery of the soil and groundwater contamination, EPA first proposed the Cooper Drum Company Site for inclusion on the NPL in 1992. EPA issued the General Notice and 104(e) letters to the Cooper Drum Company owners and operators at that time. During 1993, EPA met with Arthur Cooper, the site owner and previous operator (before Waymire Drum Company took over operations in 1992),

who was considered a potentially responsible party (PRP). The purpose of the meeting was to discuss the special notice letter EPA was planning to send to him and to begin negotiations for an Administrative Order of Consent (AOC) to conduct the RI. Later that same year, the Cooper estate declared bankruptcy upon the death of Mr. Cooper. Given its lack of assets, the Cooper estate was no longer considered a viable PRP to help pay for the Cooper Drum Company investigation and remediation. Consequently, the Site became a fund-lead site, where Superfund trust fund money is used for site activities. Based on additional site investigation data collected by EPA, the Site was proposed for the NPL in January 2001. In June 2001, the EPA added the Site to the NPL of hazardous waste sites requiring remedial action.

EPA conducted the RI activities for Cooper Drum from 1996 to 2001. EPA initiated a soil gas survey in 1996 to identify potential hot spots (areas where contaminant concentrations of VOCs are the highest) for a Phase 1 RI. This investigation identified hot spots in the vicinity of the former HWA, in the north-eastern portion of the property, and in the DPA, in the central portion of the property. The Phase 1 RI was designed to further investigate the potential presence of VOCs, semivolatile organic compounds (SVOCs), and metals in soil and groundwater beneath the Site and the adjacent Tweedy School property. Based on the results of the Phase 1 RI, EPA expanded its investigation of soil and groundwater to delineate the extent of contamination as part of a Phase 2 RI conducted between September 1998 and March 2001. The complete RI report, *Cooper Drum Remedial Investigation Feasibility Study Report* (the Site RI/FS) (URS, 2002) was released in May 2002.

The main hydrogeologic features penetrated by borings and wells completed during the RI field investigation include the Bellflower Aquiclude, the perched aquifer, the Gaspur Aquifer, and the Exposition Aquifer. These units constitute a shallow aquifer and a deeper aquifer. The shallow aquifer consists of the saturated portion of the Bellflower Aquiclude, which incorporates the perched aquifer (approximately 35 to 40 feet bgs), and the Gaspur Aquifer. The Bellflower Aquiclude extends to approximately 70 feet bgs, where it is underlain by the Gaspur Aquifer, which extends to approximately 110 to 120 feet bgs. The upper portion of the deeper aquifer system is represented by the Exposition Aquifer, which underlies the shallow aquifer. These hydrogeologic units are presented on generalized geologic cross-section B-B′ shown on Figure 2-1.

Nearby properties that also have undergone investigation as sources of groundwater contamination under the direction of the Los Angeles Regional Water Quality Control Board (RWQCB) include the Jervis Webb site (north of the Site) and two former Dial Corporation sites (northeast and east of the Site). Data from investigations at these three sites indicate that groundwater flows in a southerly direction. High concentrations of TCE in the shallow aquifer have been detected under the Jervis Webb site (33,000 parts per billion [ppb]) and in a downgradient monitoring well (6,700 ppb) 200 feet upgradient from and northeast of the Site. Given its proximity, the groundwater contamination from Jervis Webb may have commingled with and impacted the Cooper Site plume. To the southeast and further down gradient of the Cooper Drum plum is a fourth site (Seam Masters Site) that has shown high levels of TCE (up to 16,000 micrograms per liter [µg/L]). Based on investigation activities performed during the RD, groundwater contamination from the Seam Masters site has commingled with the downgradient (outside the property boundary) portion of the Cooper Drum Plume. The need to reduce commingling of these two plumes was an important consideration during the groundwater remedy selection.

The RI confirmed that waste collected in open concrete sumps and trenches resulted in releases to soil, and that migration of some of these contaminants impacted the shallow aquifer beneath the Site. The primary source of contamination was the HWA, where drum-processing operations took place until 1976, when they were moved to the DPA on the southern side of the property. The DPA also became a source

of contamination as a result of chemical spills documented during the 1980s. Beginning in 1987, the Cooper Drum Company facilities were upgraded to prevent any further release of chemical wastes and to meet environmental regulations. The former HWA was closed and replaced with a new HWA in the DPA.

Site operations have resulted in the discharge of contaminants to the surface soil, vadose zone (i.e., unsaturated zone), and underlying groundwater. Although various chemicals have been released to the Site, VOCs are found in both the vadose zone and groundwater. VOCs and non-VOCs have been found in the vadose zone and surface soils.

The principal COCs identified in Site groundwater are 1,2,3-trichloropropane (TCP); TCE; and 1,2-dichloroethane (DCA) and a semivolatile compound, 1,4-dioxane. This compound was recently detected at the site (April 2004) after completion of the ROD in September 2002, and has consequently been incorporated into the RD. Eight other COCs identified in the RI/FS are vinyl chloride (VC); 1,2-dichloropropane (DCP); 1,1-DCA; cis-1,2-DCE; PCE; trans-1,2-DCE; 1,1-DCE; and benzene. The groundwater plume is characterized by high levels of cis-1,2-DCE and TCE. Arsenic and metals found in groundwater at concentrations exceeding drinking water standards are considered to be naturally occurring. Chemical property summaries for the key COCs are provided in Appendix A.

The principal VOC contaminants in the Site soil are the same 11 VOCs listed for groundwater. The non-VOCs in the soil are benzo(a)pyrene; PCBs (Aroclor-1260 and Aroclor-1254); lead; benzo(b)fluoranthene; dibenz(a,h)anthracene; benzo(a)anthracene; benzo(k)fluoranthene; chrysene; and indeno(1,2,3-cd) pyrene. Soil lead concentrations of 1,920 to 3,240 milligrams per kilogram (mg/kg) were detected in subsurface and surface soils. The soil COCs and their cleanup levels are listed in Table 2-1.

2.2 SUPPLEMENTAL RI DATA

The California DTSC agreed to the selected soil and groundwater remedies stated in the ROD, provided additional data were collected to address data gaps prior to implementation of the selected remedies. The EPA included the following components in the selected soil and groundwater remedies to address these concerns.

- Conduct additional soil gas sampling in the DPA and former HWA to further define the extent of non-VOC contamination and the need to excavate beyond the estimated 1,650 tons of soil. (The initial soil volume estimate was approximately 2,700 tons of soil. This number has been revised due to the limitation on the excavation depth, which will be required to be no greater than 5 feet bgs.)
- Conduct additional soil gas sampling in the DPA to further identify the extent of VOC contamination and the need for remediation using dual-phase extraction (DPE) in this area.

The RD supplemental sampling effort was completed between May 2003 and March 2006 and the results were presented in a technical memorandum (URS, 2006). A summary of the field sampling results, including conclusions and recommendations from the Technical Memorandum follows.

- The extent of non-VOC soil contamination is well defined in the former HWA. Based on perimeter sampling on the north side of the DPA building, PAH soil contamination is likely to be present beneath the drum processing building. Since it is not considered feasible to excavate beneath the building, institutional controls will be needed for this area. The volume

of non-VOC-contaminated soil originally estimated in the ROD has changed from 2,700 tons, originally estimated, to approximately 1,650 tons presented in this RDR.

- The extent of VOC soil contamination is well defined in both the former HWA and DPA. Based on the RD soil gas sampling results for VOC contamination, in addition to the HWA, the DPA will also require remediation.
- The most significant discovery during the sampling effort was the presence of 1,4-dioxane in the site groundwater. It has been added to the Site COCs and will require the use of chemical oxidation as part of the groundwater remedy. 1,4-Dioxane was also detected in the perched aquifer beneath the HWA (up to 320 µg/L) and the DPA (up to 35 µg/L). This COC will be treated by an ex situ treatment system described in this RDR.

The chemical properties of 1,4-dioxane are provided in Appendix A.

The RD sampling effort sufficiently addressed the soil data gaps. The extent of non-VOC soil contamination was defined, and it was determined that the VOC soil contamination in the DPA would require remediation. Additionally soil sample results for 1,4-dioxane were well below the residential PRG of 44 mg/kg, such that this compound was not considered to be a COC for soil remediation. Data from the supplemental sampling effort, along with the RI data, have been incorporated into this RDR, as necessary. The data from the RD supplemental sampling efforts represent the most current data for the site, including soil, soil gas, and groundwater. For convenience, a complete set of the data tables, figures, and pertinent boring logs is included in Appendix B. Of particular interest are the non-VOC soil data, the soil gas data (including soil gas isoconcentration maps), and boring logs in the HWA and DPA. The figures showing the extent of non-VOC soil contamination and iso-concentration maps of soil gas contamination have been incorporated into Section 3.0 as a basis for the RD.

2.3 SUMMARY OF RECORD OF DECISION

The ROD for the Cooper Drum Site was signed on September 28, 2002. At the time, the known contaminants in groundwater consisted of VOCs only; therefore, the ROD did not make specific mention of 1,4-dioxane. However, by maintaining a comprehensive approach to cleanup, which employed the use of both in situ and ex situ technologies for cleanup and containment, the ROD-selected remedy for soil and groundwater remains viable for all Site COCs. The remedial action objectives (RAOs) for Cooper Drum, as stated in the ROD, are to protect human health and the environment from exposure to contaminated soil, groundwater, and indoor air, and to restore the groundwater to a potential beneficial use as a drinking water source. The ROD-selected remedy meets these RAOs through treatment of soil and groundwater contaminated with COCs.

2.3.1 Selected Action for Soil

The following paragraphs are excerpts from the Cooper Drum ROD:

- To remove the potential threat to human health, the selected remedy for soil will use DPE for treatment of VOCs in soil.
- Other non-VOC soil contaminants, including SVOCs, PCBs, and lead, will be excavated for disposal.

- Institutional controls will be implemented to prevent exposure to soil contaminants where excavation is not feasible.

EPA believes the selected remedy for Cooper Drum meets the threshold criteria and provides the best balance of tradeoffs among the alternatives considered. The EPA expects the selected remedy to satisfy the statutory requirements of CERCLA Section 121(b): (1) protection of human health and the environment; (2) compliance with applicable or relevant and appropriate requirements (ARARs); (3) cost effectiveness; (4) use of permanent solutions and alternative treatment technologies to the maximum extent practicable; and (5) use of treatment as a principal component.

2.3.2 Detailed Description of the ROD-Selected Remedy

The selected soil remedy components are as follows:

- In the former HWA, extract VOC-contaminated soil vapor and groundwater simultaneously using DPE technology. Treat the extracted soil vapor and groundwater using vapor and liquid phase carbon in vessels at an on-site treatment plant.
- After removal of VOCs, discharge the treated soil vapor into the air. The treated water will be re-injected into the aquifer or discharged to the public sewer system operated by the Los Angeles County Sanitation District.

The ROD indicated the total DPE remedial action duration is projected to be five years. Actual operation of the DPE system is estimated to be two years. It is assumed that vapor monitor wells and groundwater extraction well could continue to be sampled for at least three more years to ensure the remedial actions goals have been met.

Additional components of the soil remedy with respect to additional sampling to evaluate the need for use of DPE in the DPA and determine the extent of non-VOC contaminated soil for excavation are discussed in Section 2.2.

A final soil remedy component was as follows:

- Implement institutional controls for soil contaminated with non-VOCs in areas where excavation is not feasible, such as under existing structures, by requiring the execution and recording of a restrictive covenant which will limit activities that might expose the subsurface and would prevent future use, including residential, hospital, day care center and school uses, as long as contaminated soil remains on site.

Further detail on the objectives of the institutional controls and specific provisions the property owner must comply with are described in the ROD.

2.3.3 Rationale for the Selected Remedy

Five principal factors were considered in choosing the selected remedy for soil:

1. VOCs in soil are mobile but are low level threats to human health, since they exist at relatively low concentrations and can be contained.

2. DPE, an enhancement of the presumptive remedy of soil vapor extraction (SVE), can be used to simultaneously treat VOCs in soil and in the perched aquifer, which starts at about 35 feet bgs.
3. Excavation and disposal of shallow soil will be effective, because non-VOCs in shallow soil are not mobile and are localized in a confined area.
4. Use of institutional controls will eliminate/minimize the potential for exposure to any residual subsurface contamination.
5. The selected remedy is protective of human health and environment and complies with ARARs for VOCs and non-VOCs.

2.4 SUMMARY OF OU 1 GROUNDWATER REMEDY

The cleanup strategy for the groundwater (or shallow aquifer) contaminated with VOCs will use a combination of methods to achieve remedial goals and restore the potential beneficial use of the aquifer as a drinking water source. However, this RDR addresses only the dewatering of the perched groundwater in the area of the soil gas contamination to maximize soil cleanup of the COCs in the vadose zone. Selected remedies for the groundwater have been finalized and will be presented in the OU 1 (Groundwater) Remedial Design Report.

An enhanced reductive dechlorination (HRC) pilot-scale field treatability study was conducted in the main source area (HWA) from December 2003 through April 2005. The use of HRC led to the biodegradation of chlorinated ethenes; however, it was not successful in degrading 1,4-dioxane. EPA decided to evaluate in situ chemical oxidation (ISCO) technologies for the purpose of advanced treatment of all contaminants in the site groundwater. Based on the pilot test results, conducted from July 2005 through June 2006, the selected ISCO technology—ozone combined with hydrogen peroxide injection—will be selected as a source area in situ groundwater remedy, along with downgradient groundwater extraction for hydraulic containment of the plume's leading edge. An in situ permeable bioremediation barrier will also be used to expedite remediation of the portion of the plume (where 1,4-dioxane concentrations are lower) between the source area and downgradient containment extraction wells

2.5 COMPLIANCE WITH APPLICABLE OR RELEVANT AND APPROPRIATE REQUIREMENTS (ARARS)

Remedial actions selected under CERCLA must comply with ARARs under federal environmental laws or under state environmental or facility siting laws, when those are more stringent than the federal requirements. The ARARs and to-be-considered (TBC) criteria identified in the ROD for the two soil remedies (excavation and DPE) are included in Appendix C.

If, after implementation of the remedy, hazardous waste still remains at the property at levels that are not suitable for unrestricted use of the land, additional institutional controls may be required in the form of a State Land Use Covenant with the property owner. The Covenant shall conform with the requirements of pursuant to Civil Code section 1471, Health and Safety Code section 25355.5 and the California Code of Regulations, title 22, section 67391.1.

A copy of the text for these regulations and a fact sheet for recorded land use covenants is also provided in Appendix C.

3.0 PROJECT APPROACH AND DESIGN OBJECTIVES

3.1 PROJECT APPROACH AND DESIGN OBJECTIVES

Based on previous site investigations, as summarized in Section 2.0, two zones will require soil remedial actions, including limited surface to near-surface soil removal for soils impacted with lead, PCBs, and PAHs and a deeper vadose zone RA for soils impacted with VOCs. The impacted areas for the HWA are shown on Figures 3-1 through 3-3 for PAHs, PCBs and lead, respectively. The impacted areas for the DPA are shown on Figures 3-4 and 3-5 for lead and PAHs, respectively. There are no PCB-impacted areas in the DPA. The cleanup levels for non-VOCs in the soil were presented in Table 2-1.

The vadose zone and underlying shallow aquifer is impacted in the HWA and DPA. The VOC impacts to the vadose zone in the HWA and DPA are depicted on Figures 3-6 through 3-20. These figures present isoconcentration maps for selected VOCs at depth intervals of approximately 10, 20, and 30 feet bgs. In regard to the impacted shallow groundwater at the Site, this document addresses treatment for the perched aquifer only. Groundwater treatment for the shallow aquifer is currently being finalized and will be discussed in greater detail in its own RDR.

RAOs for the Cooper Drum Site were established in the Site RI/FS and published in the Site ROD (EPA, 2002).

- Restore the groundwater to drinking water standards (maximum contaminant levels [MCLs]) for beneficial use.
- Remediate soil COCs (VOCs) to prevent contaminants from migrating into groundwater at levels that would exceed drinking water standards.
- Where feasible, remediate non-VOC-contaminated soil above health-based action levels that are protective of ongoing and potential future site uses.
- Remediate COCs (VOCs) in soil and groundwater to health-based action levels to eliminate potential exposures to indoor air contaminants created by Site contamination.

The remedial actions selected address impacted soil and groundwater and will meet these objectives.

3.2 DESIGN STRATEGY

This section details the design strategy and design for the three soil remedial actions to be implemented at the Site:

- SVE/DPE for subsurface contamination between the ground surface and approximately 50 feet bgs;
- Removal of the near-surface soils up to 5 feet bgs; and
- Institutional controls for impacted soils under existing buildings and greater than 5 feet bgs.

For simplicity purposes, these descriptions are divided by affected media: soil, soil vapor (gas), and perched groundwater. Institutional controls are used in areas of the Site for impacted media where buildings or areas are not easily accessible. As previously discussed, DPE will be performed prior to excavation of the shallow soils. The institutional controls will be implemented in conjunction with the DPE to prevent any exposure prior to the excavation of soils and continued after the excavation, as needed.

3.2.1 Soil Vapor

The chosen remedial alternative will be designed to efficiently promote the removal of volatile compounds from the soil particles and water film covering the unsaturated soil so that they can be carried advectively, under the influence of an applied vacuum, to the surface for collection and treatment. Extracted soil vapor will be treated at an on-site treatment system. The removal of VOC-impacts to soil from the Site will prevent its vertical migration at concentrations that would exceed drinking water standards. The task flow diagram for the SVE and DPE system design is shown on Figure 3-21. The design details for the deeper vadose zone soils and the perched aquifer remediation are provided in Section 5.0.

3.2.2 Soil

The chosen remedial alternative will be designed to remove Site subsurface soil that is impacted with Site COCs above cleanup levels, as detailed in Table 2-1. Removal of non-VOC COCs (e.g., lead) to the health-based cleanup levels will protect receptors at or near the site during ongoing and future activities. Institutional controls will be implemented for soil contaminated with non-VOCs in areas where excavation is infeasible, such as under existing structures or greater than 5 feet bgs. Design details for the near-surface soil remediation are provided in Section 4.0.

3.2.3 Perched Groundwater

The chosen remedial alternative will be designed to remove the affected perched groundwater to further reduce the migration of contaminants to the shallow aquifer in the future. Groundwater treatment for the shallow aquifer is not addressed in this report. A perched aquifer has been identified at the site beginning at approximately 35 feet bgs. The perched aquifer has been shown to contain high COC concentrations. Therefore, DPE will be used to dewater the perched aquifer to further expose the vadose zone and subsequently remove the COCs. It is possible, due to seasonal infiltration or other means, that once this perched zone has been dewatered and remediation has ceased, the perched zone may return to saturated conditions. It is anticipated the overall VOC mass will be reduced by DPE such that rebound concentrations in the perched aquifer are expected to be below action levels. Following are factors considered for employing DPE:

- The generally shallower occurrence (approximately 35 feet bgs) of the water table in the perched zone and the high concentrations of VOC contaminants present in this zone;
- The limited hydraulic connection between the perched aquifer and shallow aquifer (as indicated by the hydraulic head difference between the wells completed in the perched and shallow aquifers); and
- The possibility that the perched zone could be dewatered at generally low flow rates (less than 10 gallons per minute [gpm]) and treated.

In addition, as an incidental consequence of applying a vacuum as required with DPE or SVE, the water table rises under and around the DPE wells, a phenomenon called upwelling. Typically, upwelling occurs only as the SVE system is turned on or active. By sucking the DPE well dry, the ability of the system to extract contaminated soil gas increases in the deeper unsaturated zone because of drier conditions and the larger exposure of the screen area in the vadose zone.

Another option would be to remediate the perched aquifer at the same time the shallow aquifer is remediated. However, an in situ method, such as ISCO, may not be equally effective in both water-bearing zones given the localized and possibly seasonal nature of perched water and its low transmissivity. Pump and treat also may be less effective based on the limited hydraulic connection between the two zones. Therefore, the RD has included DPE in the HWA as the remedy, since there is a significant COC mass in the perched zone. Groundwater sample results in December 2003 from DPE-1 (in the HWA) showed the highest VOC concentrations (total VOCs greater than 2,200 μg/L) as compared to any monitor well completed in the shallow aquifer.

DPE will also be applied to the DPA. VOC concentrations in groundwater are much lower in this area of the site. Groundwater sample results from DPE-2 (in the DPA) show approximately 250 μg/L of total VOCs. This is consistent with monitor wells MW-1 (not detected), MW-4 (<50 μg/L total VOCs), and MW-22 (approximately 12 μg/L total VOCs) that are completed in the shallow aquifer around the DPA. However, soil gas concentrations remain high in the DPA, and SVE should be implemented there. By using SVE/DPE, extracting soil gas and any contaminated groundwater available in the perched aquifer, the overall site cleanup time can be shortened by not allowing VOCs in the vadose zone and perched aquifer to further impact the groundwater beneath the DPA. Groundwater analytical results from DPE-1 and DPE-2 are included in Appendix B.

4.0 DESIGN FOR SOIL REMOVAL ACTION

4.1 SITE SOIL DESIGN

Impacted soils will be excavated to remediate lead, PCB, and PAH contamination present in HWA and DPA subsurface soils at levels exceeding cleanup goals. This work will not be performed until after DPE remediation of the vadose zone and perched aquifer has been completed. In the meantime, institutional controls will prevent exposure to the contamination. The Site is currently covered with asphalt, preventing any direct worker exposure. Initial soil removal activities will consist of four excavation areas (two areas each in the HWA and DPA) to maximum depths ranging from 2 feet bgs to 5 feet bgs. It is not necessary to excavate beyond 5 feet, since the main concern for the near surface non-VOC contamination is direct exposure. For soils deeper than 5 feet, the ROD allows, "implementation of institutional controls for soil contaminated with non-VOCs in areas where excavation is not feasible, such as under existing structures." The following assumptions limit the excavation depth to 5 feet bgs:

- Any future construction trenching or foundation installation is not expected to exceed 5 feet.
- The vertical extent of PAHs and lead have been defined and it is unlikely that these contaminants will impact groundwater, provided an asphalt cap is in place and infiltration is negligible.
- Assuming excavation will remove contamination to 5 feet, there will be no direct exposure pathways after backfilling the excavation.
- Excavation below 5 feet is not cost-effective.
- Institutional controls (i.e., land use restrictions; see ROD page 55) would be put in place to alert any future construction events that may occur below 5 feet.

Confirmation soil samples will be collected at the excavation perimeter (the excavation walls and floor) to ensure that all impacted soils are removed from the Site. Confirmation sampling will follow the procedures prescribed in the Excavation Confirmation Sampling Plan (Section 4.3). The sampling plan will use the *Guidance on Surface Soil Cleanup at Hazardous Waste Sites: Implementing Cleanup Levels* (EPA, 2004). Pending the confirmation sampling analytical results, additional excavation of Site soils may be necessary. All excavated soils will be transported and disposed of at an approved off-site facility as detailed in the Transportation Plan (Section 4.5). All excavated areas shall be backfilled as detailed in the Excavation Work Plan, Appendix D. Institutional controls will be employed for soil contaminated with non-VOCs in areas where soil excavation is infeasible, as described above. Requirements for use of institutional controls in the form of land use covenants were referenced in Section 2.5. Detailed descriptions of the design assumptions, including excavation limits, for the design are provided in the following subsections.

4.2 PRIMARY EXCAVATION AREA AND VOLUME

Cleanup levels and the COCs that exceeded these levels at the Site are listed in Table 2-1. The initial excavation areas at the Site were delineated by comparing the concentrations of contaminants in soil samples collected during the previous site characterization activities to the cleanup levels. The Site

cleanup levels will be further evaluated using recent EPA Guidance 9355.0-91 (EPA, 2004). Therefore, the cleanup levels listed in Table 2-1 may be redefined using an "area average." Results of this approach will be presented to all related parties for approval in the final confirmation soil sampling plan. The proposed initial excavation will be performed based on the hot spots identified by the cleanup levels in Table 2-1. The soils will be excavated in 1- to 2-foot intervals to the maximum depth of 5 feet. Areas outside of the initially identified hot spots will be excavated where confirmation sample results exceed the cleanup levels shown in Table 2-1 (or the re-evaluated cleanup levels), provided these areas are less than 5 feet deep and are outside Site structure boundaries. Sheet piling or other means of shoring may be used near Site structures or as needed. Shoring will be based on visual observations and geotechnical evaluations made during excavation. Areas with soil sample results that are less than cleanup levels, under Site structures, or in excess of 5 feet bgs will not be excavated.

Determination of the excavation area will include consideration of existing Site structures. Excavations will not require the demolition of existing structures; any subsurface soil contamination exceeding cleanup levels and underlying Site structures will not be excavated. Institutional controls will be enacted at the Site to limit exposure in these areas.

Based on previous site characterization activities, four areas (two each in the HWA and the DPA) have been delineated for primary excavation at depths ranging from 2 to 5 feet bgs. Areas delineated for excavation range from 1,200 to 5,100 square feet. Excavation limits are shown on Figures 4-1, 4-2, and Drawing C-2. These limits bound the soils that exceed soil cleanup levels. The initial excavation areas, depths, and volumes are summarized in Table 4-1. These two areas were determined using the criteria listed in Table 4-2. The excavation volume calculations are presented in Appendix E.

4.3 EXCAVATION CONFIRMATION FIELD SAMPLING PLAN

This field sampling plan (FSP) is presented as part of the Sample Analysis Plan (Appendix F). Confirmation sampling will be performed during primary excavation activities to ensure that soils with contamination levels exceeding the soil cleanup levels listed in Table 2-1 have been excavated. Confirmation samples will be collected from the excavation floors and walls. Along the excavation floor, soil samples will be collected on 20-foot centers, and sidewall samples will be collected at 40-foot intervals. Soil samples should also be collected on excavation perimeters to confirm that the surface contamination surrounding the excavation is below established cleanup levels (Table 2-1).

Sample Collection

Soil samples may be collected by one of the following methods:

- A spade-and-scoop method or, when the excavation does not allow for safe sampling by this method.
- Driving a stainless steel liner into soil contained in a backhoe bucket.

If the spade-and-scoop method is used, samples will be collected with a pre-cleaned or decontaminated stainless steel spade. The soil will be transferred into the appropriate sample container, secured, and properly labeled. If a stainless steel liner is used, the liner will be prepared for chemical analysis by covering the ends of the tube with Teflon sheeting and plastic end caps, and sealed with tape. The liner will be properly labeled and placed in a new resealable plastic bag. Samples collected by either method

designated for laboratory analysis will be placed in an ice chest and kept cool (approximately 4 degrees Celsius [°C]) until they can be transported under chain-of-custody procedures to an analytical laboratory.

Sample Analysis

All confirmation soil samples collected during the removal action will be screened using field-screening methods for the COCs: lead, PAHs, and PCBs. Field-screening methods include a field-portable X-ray fluorescence (XRF) for lead and immunoassay test kits for PAHs and PCBs. The field immunoassay kits manufactured by SDI have the following minimum detection limits (DLs): 0.5 ppm for total PCBs and 0.2 ppm for PAHs as phenanthrene. Therefore, the minimum DL for total PCBs is less than the cleanup goal of 0.870 ppm which, per the Cooper Drum ROD, was back-calculated by applying residential exposure parameters used in the Site HHRA and a target health risk level of 1 in 100,000. The ROD also describes the cleanup level for PAHs in soil as being based on the upper tolerance limit background benzo(a)pyrene-toxicity equivalent (B(a)P-TE) concentration for the southern California PAH data set, which is 0.9 ppm B(a)P-TE. The immunoassay kit with the minimum DL of 0.2 ppm does not differentiate between phenanthrene and other PAHs. However, a table is provided that allows cross-referencing of the sample results with concentration equivalents for other PAHs. Additionally, the immunoassay kits are to be used as field screening tools, with 20% of the samples to be split and sent off for laboratory analysis.

4.4 STORAGE OF EXCAVATED MATERIAL AND SOIL PROFILE SAMPLING

All excavated material will be stockpiled on site in the areas designated in the Excavation Work Plan, presented in Appendix D. Under the State Water Resources Control Board General Permit for Discharges of Storm Water Associated with Construction Activity (Construction General Permit, 99-08-DWQ), a Storm Water Pollution Prevention Plan is required for projects involving 1 or more disturbed acres. However, the area being excavated at the site is less than 1 acre (0.22 acre or 9,575 square feet) and does not fall under these regulations. Precautions will be taken to prevent the migration of excavated material off Site. These will include placing stockpiles of excavated material onto one layer of polyethylene plastic sheeting and covering the stockpiles with polyethylene plastic sheeting. Berms will be constructed as necessary to divert runoff away from the stockpiles and to prevent the runoff from leaving the site or going to the Site drains.

Material from the four excavated areas may be kept separated for purposes of soil profiling. Soil profiling samples will be collected at an approximate interval of one sample per 150 cubic yards (cy) or as requested by the disposal facility.

4.5 TRANSPORTATION AND DISPOSAL OF EXCAVATED MATERIAL

This section was developed to provide details on the safety precautions taken to identify applicable permits, transportation routes, and transportation mechanisms from Cooper Drum to the appropriate off-site (Class I, Class II, or Class III) disposal facilities.

4.5.1 Soil and Concrete/Debris Transportation

After the soils have been characterized, the excavation subcontractor will load nonhazardous (e.g., Class II) contaminated soil and concrete/debris into end-dump trucks for transportation to the designated

Class II disposal facility (Appendix D). Any hazardous or Class I soil will be loaded into roll-off bins or trucks, manifested, and transported to the designated Class I disposal facility. Each truck will be decontaminated, and its load will be covered with plastic sheeting or tarpaulins and secured. Other measures that may be taken to prevent contaminated material from spreading off site during the loading process are: using water for dust suppression during loading activities, knocking off loose soil from trucks before leaving the Site, and washing down trucks and equipment before leaving the Site. Each load will then be inspected before leaving the decontamination area. Trucks will leave the Site by following the haul route presented in the following section. The truck will follow a route proceeding from the Site North on Rayo Ave, then East on Firestone Boulevard. This will take the trucks to Interstate 710.

4.5.2 Directions to Designated Disposal Facility

Prior to starting the excavation work, a disposal facility will need to be determined. At that time, detailed directions with a map will be provided to the hauling subcontractor.

4.6 SPILL RESPONSE

This section provides contingency measures to be employed in the event of spills and discharges that may occur during the handling and movement of potentially contaminated material (e.g., soil) and water. All trucking company employees have been trained to use the following procedures in responding to an accident or spill involving hazardous material.

- Approach the situation with extreme caution.
- Identify the hazards involved relative to:
  - Physical harm to people;
  - Assessing the physical damage;
  - Assessing the possibility of a release of hazardous waste; and
  - Identifying the hazardous waste involved by using information on the manifest.
- Contain the spill to prevent further spreading of the hazardous waste.
- Completely isolate the hazardous area.
- Evacuate all personnel from the hazardous area.
- Deny entry to anyone except emergency/rescue/response personnel (only after making all emergency response personnel fully aware of the hazard).
- Notify the proper emergency agencies (including Fire and Safety, Police, California Highway Patrol, and any other emergency agencies as appropriate).
- Contact the emergency phone number on the manifest to convey full details of the incident to the shipper.
- Contact the trucking company dispatcher and give full details of the incident.
  - The dispatcher will notify all government agencies involved in the transportation of the hazardous waste of the release or potential release of a hazardous substance.

- The trucking company will arrange for equipment to be mobilized to the site, and personnel will be dispatched or the driver on the scene will begin cleanup efforts.
- The trucking company safety coordinator will respond to the scene or will send a representative as soon as possible to direct the cleanup and will be the point of contact (POC) with all government agencies involved in the incident.
- The trucking company safety coordinator will file all appropriate information with all regulatory agencies involved.
- Drivers are instructed to give information only to emergency response personnel and not to any news media.

4.7 SITE RESTORATION

Clean backfill material will be obtained from an offsite source and will be sampled and analyzed to ensure compliance with the project specifications. Backfilling and grading will be accomplished to restore pre-excavation drainage characteristics at the Site. The soil will be compacted in a maximum of 6-inch lifts to 90% of the maximum dry density for cohesionless soils and to 85% of the maximum dry density for cohesive soils, based on the Modified Proctor Test (American Society for Testing and Materials [ASTM] D1557). A minimum of one density test will be performed per 6-inch compacted lift at each excavated area.

After the excavation is backfilled, the ground surface will be restored to its original condition, including asphalt patching of excavated areas. Pre-excavation grades will be maintained. Backfilling details and asphalt restoration details will be included on the project engineering drawings and the project specifications.

5.0 DESIGN FOR DPE REMEDIAL ACTION

5.1 DESIGN STRATEGY

One of the most effective soil treatment systems, which is in most cases, both technically and economically feasible for sites contaminated with VOCs, is vapor extraction using DPE and/or SVE. DPE is a system that extracts soil gas and groundwater simultaneously. The extracted soil gas and groundwater are passed through a treatment unit to remove the VOCs before they are released as exhaust to either the atmosphere (vapors) or re-injected into the shallow aquifer/discharged to sanitary sewer (water). This system is a proven technology and has historically shown very promising results in reducing soil and groundwater contamination to a point where environmental impact is no longer significant. The perched groundwater and condensate from the SVE will be treated along with influent from groundwater extraction wells for the OU 1 (groundwater) RA at an onsite treatment system. The effluent from this treatment system will be proportionally discharged to the Los Angeles County Sanitary District (LACSD) sanitary sewer and re-injected into the shallow aquifer.

5.1.1 Pilot Test Summary

The design for VOC removal in the vadose zone, using DPE in the former HWA and DPA, was based on pilot tests performed in the field at the Site. The testing objective was to evaluate the potential application of DPE/SVE technology to remediate contaminated soils beneath the Site. This test was conducted to determine soil air permeability and to estimate the radius of influence (ROI) of an SVE well. This information was needed to design an effective DPE/SVE system (e.g., to determine blower size, number of wells, and flow rates). Effective ROI depends on the rate of gas flow being extracted; the diameter of the well; subsurface material permeability; well screen thickness; and the soil type, moisture, and clay fraction.

SVE pilot tests were conducted in SVE-1 on January 3, 2001, and in SVE-2 on March 3, 2004. These well names have since been changed to DPE-1 and DPE-7, respectively, to reflect the dual-phase removal action. The SVE tests were performed using a trailer-mounted SVE system provided by Environmental Supply and permitted under the Southern California Air Quality Management District (SCAQMD). Vapor probes VP-1 and VP-2 were monitored during the SVE-1 test. Vapor probes VP-3 and VP-4 were monitored during the DPE-7 test. Vacuum response was measured using a Magnehelic pressure gauge connected to each vapor probe. A range of gauges was used to obtain more sensitive measurements. DPE-1 and DPE-7 wells were operated for three and four hours, respectively. Three and four influent air samples were obtained from DPE-1 and DPE-7 wells, respectively, for VOC analysis; the results are provided in Appendix G. Figure 5-1 shows the location of the wells used and cross-sections in the HWA and DPA. Figures 5-2 through 5-4 are lithologic cross-sections A-A′ through C-C′, which present the generalized geologic conditions in the areas of the two tests.

5.1.2 SVE Test Results

During the test, influent air samples were collected in Summa canisters for VOC analysis as the air stream entered the air emissions control system from the extraction well. Also during the test, vacuum readings at the extraction well and at nearby observation probes were recorded at three depths. Figures 5-5 and 5-6 illustrate and summarize observed vacuum responses, soil lithology, and relative distance from the SVE

pilot test extraction well. Tables 5-1 and 5-2 summarize the air flow rates and vacuum measurement at the end of each test. Vacuum measurements collected during the tests are included on the field data sheets in Appendix G.

Estimates of soil permeability (k) and the ROI of vapor extraction wells are each fundamental to the design of a vapor well field for a vapor extraction system. On-site testing provides the most accurate estimate of k. Both k and ROI are used to space extraction wells and size the SVE system. Soil gas permeability, or intrinsic permeability, varies according to grain size, soil uniformity, porosity, and moisture content. The value of k is a physical soil property and is independent of extraction and injection rates. The DPE and SVE design methodology used two techniques to calculate and cross-check the DPE ROI in each area. These two methods included an empirical calculation method and a graphical method.

5.1.3 Methodology and Calculation of SVE ROI and Flow Rate

The ROI was calculated by two methods, graphically and empirically, to cross-check the results. The graphical method of calculating the ROI was determined using data from two SVE tests conducted at the Site on January 3, 2001, at well DPE-1 and on March 3, 2004, at well DPE-7. DPE-1 is in the HWA, and DPE-7 is in the DPA. The SVE wells and vapor probes or vapor monitoring wells were used to determine SVE well ROIs. Vacuum responses at three depths (10, 20, and 30 feet bgs) were recorded from four vapor monitoring wells (VP-1 through VP-4) located various distances from DPE-1 and DPE-7 (Figures 5-5 and 5-6). The ROI was determined by plotting vacuum response versus distance using the 10-foot and 30-foot depths from the two vapor monitoring wells located 25 feet and 45 feet from DPE-1. The high vacuum reading (at the 20-foot reading) at VP-2 was observed and not used; it may indicate a preferential flow pattern in this zone. The vacuum readings recorded from VP-3 and VP-4 could not be used to determine the ROI graphically because the two vapor monitoring wells were set at equal distances from DPE-7; this was a result of constraint caused by the location of SVE-2 within the DPA building. In determining the ROI, vacuum readings at each depth (i.e., 10 and 30 feet bgs) were plotted (Figures 5-7 and 5-8). These figures show that the best-fit line intersects the x-axis at about 52 to 60 feet for the 10-foot bgs and 30-foot bgs zones, respectively. It should be noted that a 0.1-inch of water (in. H_2O) line was used, which is the assumed minimum vacuum at which an acceptable level of influence for SVE will be effective. By averaging the ROIs (i.e., where the best-fit line intersects the x-axis), we estimated the overall ROI to be 55 feet. However, as the soils dry up, as a result of longer term DPE action, the ROI should improve.

The empirical method for calculating the ROI is presented here. Vacuum was applied to the DPE wells during the test until steady state conditions were observed. The criteria for "field steady-state conditions" were defined as stable vacuum readings on observation wells (until the vacuum response does not change by more than 10% over a 15-minute interval) and field-monitored vapor concentrations leveling off in value. Then vacuum readings at near steady-state condition were used to calculate the air permeability of the soils, using the following equation by Johnson et al. (1990):

$$\frac{Q}{H} = \pi \frac{k}{\mu} p_w \frac{\left[1 - \left(P_{ATM} / P_w\right)^2\right]}{\ln\left(R_w / Ri\right)}$$

Where:

k = permeability, Darcy

Q = air flow rate, cm^3/sec
μ = viscosity of air, centipoises
H = height of extraction well screen, feet
R_w = radius of vapor extraction well, cm
R_i = distance to monitoring well, cm
P_w = absolute pressure at vapor extraction well, atm
P_i = pressure at distance R_i

By using the following conversion factors:

472 cm^3/sec/cfm
30.48 cm/foot
406.8 in. H_2O/atmosphere

And rearranging the equation becomes:

$$kH \frac{\mu(406.8)\left(Q\, cm3/sec\right)\left(472 \frac{cfm}{cm3/sec}\right)(406.8 - P_w)\, 1n\left(\frac{R_w}{R_i}\right)}{\Pi(30.48)\left[(406.8 - P_w)^2 - (406.8 - P_i)^2\right]}$$

This equation was used to estimate the air permeability of the soils beneath the site. As shown in Tables 5-3 and 5-4, the air permeability of the soils is approximately 0.7 to 0.8 Darcy. The ROIs were calculated to range from approximately 31 feet (in one area) to 65 feet. This range agrees well with the ROI that was estimated graphically. Therefore, the design ROI chosen for these HWA and DPA sites is 55 feet.

5.1.4 Design Strategy

Results of the pilot test and calculations indicate that SVE is an appropriate choice for remediating the vadose zone soils in the HWA and DPA. The Site also exhibits a shallow perched aquifer, with high concentrations of COCs (see Section 3.2.3). Although partial cleanup of VOCs in the perched aquifer groundwater will be accomplished by operation of the SVE system for soil vapor remediation, we propose to use a groundwater recovery system to enhance the degraded water in the perched aquifer. A simple modification to the SVE wells and treatment system will be employed to remediate the shallow perched aquifer and speed up the removal of COCs from this area. This modification to these SVE wells will include using groundwater extraction pumps in the same extraction well for dual phase extraction of soil vapor and groundwater (DPE wells). The DPE will serve to lower the perched aquifer and expose more vadose zone soils impacted with COCs for extraction as soil vapor. Extracted groundwater will be conveyed to an on-site treatment system. The design for the DPE wells and treatment system follows.

5.2 VADOSE ZONE DESIGN

The vadose zone design evolved from the pilot test results and calculations summarized in Section 5.1. This design demonstrates a practical application of DPE technology to the HWA and DPA. System design calculations are included as Appendix H. These calculations determine the friction losses through the system in order to determine the SVE blower and individual submersible groundwater pumps.

DPE will be used to remediate VOC-impacted soil present in the vadose zone that is beyond the excavation limits, including under existing structures. The DPE system will require the installation of several DPE wells in the HWA and DPA areas of the Site. Extracted soil vapor will be treated using an on-site treatment system and discharged to the atmosphere. A detailed description of the design assumptions and the design for the SVE system is provided hereafter. Data obtained from SVE pilot tests were used to determine the well ROI and flow rates.

5.2.1 DPE Well Placement

Per the Cooper Drum ROD (EPA, 2002), the cleanup levels for VOCs in soil are to be determined (TBD) based on the remedial goals, which are:

- To prevent the vertical migration of leachate at concentrations that would impact the shallow aquifer at levels exceeding MCLs; and
- To ensure that residual VOC concentrations remaining in soil (after soil vapor extraction) are protective of potential indoor air receptors.

To evaluate attainment of these goals, performance evaluation soil gas samples will be collected during soil vapor extraction. The sampling results will then be used in the VLEACH model to evaluate impact to groundwater, and in the Johnson & Ettinger Model to estimate indoor air concentrations.

Although soil VOC cleanup levels are TBD, it was important to delineate an approximate area where soil vapor extraction would occur. Therefore, the cumulative 1,000 parts per billion by volume (ppbv) VOC isoconcentration contour, drawn based on soil gas samples from all depths, was used as a reasonable estimate for the horizontal and vertical extent of remedial action. The 1,000 ppbv contour is expected to be a conservative estimate of the extent of contamination that requires cleanup, because unless the contamination is right at the capillary fringe or just under the soil surface, soil gas concentrations less than this level are not likely to trigger model-predicted impacts greater than MCLs in groundwater, or greater than health risk levels in indoor air.

DPE well locations and ROIs (using the 55-foot ROI) were plotted on a site map showing the extent of soil vapor contamination exceeding 1,000 ppbv at 10, 20, and 30 feet bgs. Wells were placed to have overlapping ROIs and to encompass the 1,000 ppbv isoconcentration contour. This method confirmed that six wells would be required in the HWA and three wells, two of which are new, would be required in the DPA. The plots are shown as Figures 5-9 through 5-11 (HWA) and Figures 5-12 through 5-14 (DPA). The proposed well layouts were determined giving consideration to the use of existing SVE wells (used in the SVE test [SVE/DPE-1 and SVE-2/DPE-7]).

5.2.2 Design Flow Rates

Flow rates were recorded from the DPE wells (DPE-1 and DPE-7) during the SVE field test and these rates were used to determine a practical flow rate from each vapor extraction well. Field data collected during the SVE test are provided on Tables 5-1 and 5-2. Flow rates were plotted versus vacuum for the extraction well (Figure 5-15). It is assumed that a vacuum of 6 inches of mercury (in. Hg) or 82 in. H_2O is an acceptable wellhead vacuum for a typical SVE system. At this vacuum, the wells produced 47 cubic feet per minute (cfm). The total theoretical flow rate, if all wells are open, is estimated to be approximately 450 cfm. However, from a long-term operations and maintenance (O&M) perspective and based on site characteristics a more realistic design flow for the Site is 250 cfm. It has been shown to be

more cost-effective to operate SVE and DPE systems at slightly lower flow rates at sites that contain finer grain soils, such as those found at this Site. In addition, at each boring location a well will be installed with two discrete screened intervals. This will allow control of the vadose zone removal action by extracting from a select interval to maximize mass removal based on soil characteristics and contamination concentrations. The deeper screened well will also be screened into the saturated zone of the perched aquifer. A submersible pump will be installed in the deeper well to extract groundwater as required.

The HWA airflow strategy is to use the original main extraction well, DPE-1. The airflow strategy in the DPA is to use the original main extraction well, DPE-7, with the other surrounding extraction wells operating in a phased approach. The DPE wells located in the most contaminated areas will be brought online to the treatment system first, and as system capacity allows, bring more wells online based on contaminant concentrations and mass removal rates.

As described above, Both the HWA and DPA extraction wells will operate in phases, with various combinations of extraction wells operating in each area. The target extraction rate per well is 50 standard cubic feet per minute (scfm). Each well will also be designed to operate as an extraction or air inlet well. The remediation system will include an air inlet valve for air dilution. Thus, the plant operators can control the extraction (ventilation) at the treatment compound to generate a ventilation rate of 50 cfm per well. The ventilation rate control features include a valve at the wellhead valve box to convert each well from an extraction well to an air inlet well, valves at the main pipe rack to the control panel to control the number of wells operating at any given time interval, and the automatic and manual air dilution valves for the system.

5.2.3 Basis of Design for DPE Wells and Treatment Compound

Following is a summary of the design inputs for the DPE wells.

- Ten-inch borehole/6-inch Schedule 40 polyvinyl chloride (PVC) well casings for the deep wells, depth-discriminate soil sampling and continuous well logging.
- Eight-inch borehole/4-inch Schedule 40 PVC well casings for the shallow wells, depth-discriminate soil sampling and continuous well logging.
- In the HWA, existing DPE-1 well will be used, screened between 8 and 43 feet bgs. Five additional double nested wells will be installed in HWA. In the DPA, DPE-7 will be used, screened between 8 and 48 feet bgs. Install two new double nested DPE wells. Wells will be referred to as DPE-3S through DPE-8S and DPE-3D through DPE-8D, where the “S” refers to shallow and the “D” refers to deep.
- The new DPE wells’ shallow well will be installed to 32 feet bgs total depth and screened between 10 and 30 feet bgs. The deep nested well will be screened from 30 to 48 feet bgs, and have a total depth of 50 feet bgs.
- Vapor extraction rate of 50 scfm from each well (determined empirically from SVE test).
- Extraction well ROI of 55 feet as determined from SVE tests.
- In the deeper screened wells, a 0.5 horsepower (hp) submersible pump will be used in each new well yielding a 0.5 to 1.0 gpm water extraction rate per well.

- Soil gas concentrations detected during the SVE test:
  - Total VOCs, the sum of each speciated compound reported on the Method TO-14 analyses, range from approximately 440 parts per million by volume (ppmv) to 1,160 ppmv at SVE-1 and SVE-2, respectively, at the end of the pilot test. The samples contained PCE, TCE, fuel constituents and several breakdown products of chlorinated solvents. Analytical reports are presented in Appendix G as part of the Pilot Test Data.

Summary of DPE Treatment Compound (SVE and Groundwater Systems):

- For the SVE and ex situ groundwater treatment systems, a 25-foot by 30-foot concrete pad (6-inch slab with edge footing) with secondary containment will be constructed. It will be designed for Seismic Zone 4 and require approximately 120 feet exterior 8-foot chain-link fencing with vinyl security slats, one standard 12-foot gate, and one man gate.
- Electrical service and remote monitoring communication tied to existing local services. Existing power is approximately 600 A, 480 V. SVE requires approximately 100 to 200 A, 230V, depending on specific equipment. The groundwater equipment, discussed in greater detail in the groundwater basis of design (BDR), will require approximately 230A, 208V. A total of 330 to 430 A will be required for the complete remediation system, which includes the OU 2 treatment system discussed in the OU 2 BDR.
- Capacity of 250 cfm at 10 in. Hg, SVE blower with a knockout pot and catalytic oxidizer (CatOx), with a quench and acid gas scrubber air emission control (condensate to be sent to treatment system).
- Groundwater extracted as part of dual-phase operations will be sent to an equalization tank, then pumped into an ex situ ozone and hydrogen peroxide treatment system. Prior to discharge/re-injection, groundwater will be sent through two liquid-phase granular activated carbon (LGAC) vessels to remove any remaining contaminants to levels below discharge limits.

5.2.4 Basis of Design for Vapor Monitor Well Installation

This section identifies the locations for new vapor monitor well installations (referred to as vapor monitor points [VPs]) to evaluate the performance of the DPE wells. The design includes nine operating DPE wells. There are currently four VPs at the site: two are in the DPA and two are in the HWA. Extraction wells DPE-1 through DPE-6 together with the associated VP-1 and VP-2 are located within the HWA as shown in Drawing C-1. Extraction wells DPE-7, DPE-8, DPE-9 as well as the VP-3 and VP-4 are located in the DPA, also shown in Drawing C-1.

Thirteen VPs will be installed to monitor remediation activities and measure the clean-up progress at the site. VP-5 through VP-8 will be added to the DPA, and VP-9 through VP-17 will be added to the HWA.

The new VPs will provide access to more specific locations and depths and will allow measurement of the induced vacuum and collection of soil gas samples for analysis. The locations of the additional nine VPs in the HWA and four VPs in the DPA were chosen to characterize the two target zones.

A general design of a VP is shown on Drawing C-5. The VPs are placed downgradient and within the plumes to ensure full coverage. Table 5-5 provides a matrix showing the DPE wells and the relative

distances to the VPs. Each DPE well will be monitored by at least two VPs within its ROI to monitor induced vacuum and trends in the plume.

In the HWA, one VP will be located within a distance of approximately 25 feet and the second VP will be located at a distance of approximately 50 feet relative to the DPE.

Since a concrete foundation, approximately 4 feet high and 35 feet wide, crosses the DPA, no VPs could be placed within this area. However, the locations of the new VPs are within the design limits and are not expected to compromise the new monitoring system.

5.3 PERCHED GROUNDWATER DESIGN

Groundwater extraction will be employed to dewater the perched aquifer (located at approximately 35 to 40 feet bgs), which over time will more fully expose the vadose zone and promote further removal volatilization of contaminants. Extracted groundwater will be pumped to the surface to the on-site treatment system and discharged, as discussed previously in Section 5.1. A detailed description of the design assumptions and the design for the groundwater extraction system is located in the OU 1 Groundwater RDR. Appendix I of this RDR presents a technical memorandum detailing results from a pump test performed on the perched aquifer. Section 5.5 presents some general concepts of the DPE well and treatment of the extracted groundwater

5.4 DETAILED DESIGN OF DUAL-PHASE EXTRACTION COMPONENTS

This section summarizes the DPE design details. Additional detail is provided in the O&M Guidelines provided in Appendix L of this RDR. Design highlights follow.

5.4.1 DPE Well Details

DPE well design features include the ability of these wells to extract vapor and liquid (groundwater) from the subsurface zone. The wells will include an electric submersible pump to remove groundwater and depress the perched zone, in an effort to continuously lower the perched water table in this area. This feature will allow more of the vadose zone to be exposed, thereby promoting more rapid removal of source area contamination and COCs dissolved in the soil pore water, and restoring the site effectively. The electrical supply line and the water discharge line will be contained within the well casing. At the surface, the wellhead in the vault box will be designed to allow the electrical line and the water line to penetrate the pipe wall without affecting the vacuum within the well.

In addition, the DPE wells will include a vertical “T” connection with a valve, so that these wells also can be modified at the vault box for conversion to an air inlet well. Ultimately, the operator will have a great deal of flexibility in the field to make modifications at the wellheads or at the vault box to control the ventilation rate and each well’s function as a DPE well, an air inlet well, or an isolated well, shut off from the remediation system.

5.4.2 Blower Design and Selection

Blower design is based on the pilot test data and results as summarized in Section 5.1. The blower will be a positive displacement specified to produce approximately 10 inches vacuum of mercury. It will include

a particulate filter, inlet and outlet silencers, and an acoustical sound enclosure to reduce the noise impacts to the surrounding neighbors. The blower design also will be specified to meet an explosion-proof classification (i.e., NEMA Class 1, Division 1). This will provide an extra level of safety for the operators and the public from the potential explosive mix of COCs at this site. Since the system is integrated, the CatOx manufacturer will specify the actual system blower. Sample blower curves and other treatment equipment are included as Appendix J.

The blower to be specified to the vendor will operate at 250 scfm and produce 10 inch Hg of vacuum.

5.4.3 Groundwater Extraction Pump Design

The deeper extraction well at each location will include groundwater extraction pumps. These pumps will continually depress the perched aquifer to further expose the vadose zone, promoting more rapid COC removal by vapor extraction. The pilot testing performed at the Site included groundwater extraction and subsequent measurements on the aquifer to properly size the groundwater extraction pumps.

Groundwater extraction pump design details are based on two short-term pumping tests (3 to 4 hours) performed on wells SVE/DPE-1 and SVE-2. Based on the two pumping tests, a design flow rate from each well is 0.5 to 1.0 gpm per well, for a total system flow rate of 4.0 to 8.0 gpm. The total depth of each well will be 50 feet bgs. A 2-foot sump will be included in each well design for placement of the extraction pump. The design screen interval is 30 to 45 feet bgs. A submersible pump controlled with a variable frequency drive will be used to achieve the low flows and prevent the well from running dry. Test results are summarized in the URS Technical Memorandum dated July 13, 2004 (URS, 2004; Appendix I)

5.4.4 Air Emission Controls

Based on the Site COCs, the contaminants being removed from the vadose zone will include chlorinated compounds. A CatOx vapor emission control unit has been selected for this application. In addition, a quench followed by an acid gas scrubber will be required to remove acid gases and prevent the production of dioxins and furans created by the oxidization of chlorinated compounds. An integrated system supplied by one vendor will be used.

CatOx was chosen as the emissions control system, based on soil gas and SVE test contaminant concentrations measured during the RI and related pilot testing. VOC concentrations (see Appendix G) are too high for vapor-phase carbon and too low for a thermal oxidizer to be efficient.

5.4.5 Extracted Groundwater Treatment

Based on the Site COCs, the contaminants being removed from the perched aquifer will include chlorinated compounds and 1,4-dioxane. The treatment technology selected for this application will be an advanced oxidation system combing in ozone and hydrogen peroxide to destroy the contaminants. LGAC vessels will follow the oxidation system to act as a polishing step prior to discharging treated groundwater.

5.4.6 Manifold and Piping Design

All extraction wells will have flow control valves at the wellhead and a "T" connection that will allow each well to also act as an air inlet well within the underground vault box. The DPE wells will be piped individually to the treatment system that conveys airflow to the treatment compound. The conveyance line will be sloped back to the extraction wells to prevent liquid blockage, in the event the vapor stream condenses in the lines. This design provides operational flexibility by allowing the operators to control flow and take measurements from each DPE well at the compound.

5.4.7 Treatment System Controls and Monitoring Points

The DPE monitoring systems will include the following components to promote safe and efficient remediation operations.

- *Vacuum Gauges* on each vapor inflow line and on the manifold headers.
- *Lower Explosive Limit (LEL) meter at the catalytic oxidizer*. If this LEL is exceeded, it usually indicates that the vapor mix is potentially too rich. When this condition occurs, the system will automatically add dilution air to lower the inlet concentration. If the dilution air valve is open 100% and inlet concentrations still exceed the LEL, the LEL meter will trigger a system shutdown.
- *Flow Rates* monitored via *pitot tubes, static pressure gauges, and temperature gauges* on each line. If the flow rates fall outside of the operating limits, headers may be blocked or plugged.
- *Temperature Switches* on the blower exhaust to monitor for safe operation. If this temperature is too high, it usually indicates motor problems or other upstream issue causing back-pressure on the blower. When temperatures exceed the high temperature set point, it will trigger a system shutdown. Temperature gauges will be included on the CatOx to monitor for safe operation. If the temperature is too high, it usually indicates CatOx problems, such as high inlet concentrations, and will trigger a system shutdown.
- *Pressure Switches* on the inlet and outlet side of the blower. If the pressures fall outside of the operating limits, the structural integrity of the pipe/equipment may be exceeded, which will trigger system shutdown.
- *An Hour Meter* to document system performance. It also will communicate to the controller so that the system can be monitored remotely to verify operation.
- *Tank Float Switches* at several locations to monitor key liquid levels in several tanks. The tanks include the "knock-out" pots for vapor condensate, the equalization tank for the extracted groundwater, the acid gas scrubber tank, the process tank, and the sump on the process pad. These switches monitor the low level, high level, and high/high level in the tanks. These level controls are used with the controller to call for more caustic or process water or to stop the flow into a tank. The high/high level float switch is used to shutdown the remediation system as a safeguard.
- *Flow Meters/Totalizers* at the discharge location to the sewer/injection well to monitor the total volume of groundwater discharged to each location.

Controls associated with the treatment systems are typically installed on the system by the manufacturer as part of a typical controls package. A review of the manufacturer's controls will be conducted prior to ordering to ensure all parameters are met to operate safely and continuously.

5.4.8 Instrumentation

The remediation system instrumentation and control (I&C) system assures that the system components operate correctly and efficiently. This coordination and control also provides for safety and security. The instrumentation designed for the Site remediation system will allow the system to operate with a high degree of automation and remote monitoring. The system employs three types of control: local control, centralized control, and remote control.

- Local control refers to the control of the valves at the wellheads for the DPE wells. These valves will not be automated at the field location.
- The centralized control refers to the control elements that will be located in the system compound. This control methodology allows the operator to control mechanical components (e.g., valves) and electrical components (e.g., switches) by hand in the compound. The centralized control methodology will have the greatest degree of control and override power of the three control methods.
- The remote control methodology will allow the operator (or others with the proper codes) to monitor the remediation and "stop" the system using the programmable logic controller (PLC).

Modems and telemetry will be employed to monitor and control the system. There also will be an auto-dialer to alert operating personnel of any malfunctions. These components, along with the PLC, will allow operators to monitor the system remotely.

The following instrumentation and process components are typical of what will be available on the remediation system:

- Pressure/vacuum gauges for each SVE well on the pipe rack in the compound
- Blower motor thermal overload switch
- Vacuum relief valve to secure blower shutdown
- Pressure and temperature monitors on the SVE lines
- High and low temperature shutoff at the air pollution control device
- Pressure relief valves at the blower inlet and outlet
- High liquid and high/high liquid shutdown in the groundwater surge tank
- High liquid and high/high liquid shutdown in the vapor knock-out drum
- Water flow totalizer and system run clocks
- Localized control panels and central control panel for the submersible groundwater pumps

The remediation system operators also will have other portable monitoring equipment and tools for proper system adjustment and operation.

5.4.9 Electrical Controls

The electrical equipment will be designed and selected in accordance with the classification of the various areas of the remediation system. In accordance with the National Electrical Code (NEC), and considering the mixture of vapors the system will handle at the Site, the system is assumed to require Class 1, Division 1, electrical components, especially given that the system will be remotely monitored and managed by operating personnel only 1 to 3 times per month. Class 1, Division 1-specified components are designed to operate in atmospheres with potentially explosive or flammable vapors.

The motors for the system will be specified to be totally enclosed, fan-cooled (TEFC) as well as explosion-proof. The motors also will be rated "T," as defined by the NEC, and comply with the National Fire Protection Association (NFPA) 497M (or latest equivalent) to produce lower temperatures on the external housing, to comply with the Class 1, Division 1, criteria.

Other electrical components will be specified to operate under outdoor weather conditions for this area in California. The electrical panel will include safety components, such as breakers and electrical grounding. There will be an emergency shut-off switch inside the compound. The remediation system will be lighted at night for security and safety.

5.4.10 Process Safety Checklist

In addition to the mechanical controls, which provide safe operation, mentioned above, the system design will specify that the remediation system include the following key process safety features.

- An O&M manual for pertinent equipment;
- A clearly marked emergency shut-off switch in the treatment compound area;
- NFPA warning signs and placards on the security fence;
- Emergency contact names and phone numbers on the security fence;
- Security fencing and lighting;
- Spill prevention and containment cabinet;
- First aid kit;
- Clearly marked directional flow arrows on the process piping;
- Fire extinguisher; and
- Other safety components, as required.

A process safety review will be accomplished as an expanded component of the quality assurance (QA) review that is standard procedure for URS design projects.

The deliverable product resulting from this effort will be a checklist that demonstrates compliance with ARARs and pertinent codes and standards for the project remediation system. This checklist will be a living document that follows the development of the design to the "final" stage and into system installa-

tion. It is currently anticipated that approximately one page of text may be incorporated into the process flow diagram (PFD) to record the revision number, date, and initials of the reviewing engineer.

5.5 DESIGN ASSUMPTIONS FOR DPE SYSTEM OPERATION

The overall treatment process is DPE. The single treatment compound will be centrally located to minimize trenching and materials. The compound will be capable of treating up to 250 scfm of COC-laden vapor streams and up to 10 gpm of perched groundwater and condensate from the vapor streams.

5.5.1 VOC Mass Estimates to Cleanup

From previous VLEACH model runs, mass estimates of the contamination were calculated for both the HWA and DPA. At the HWA, approximately 2,900 pounds is estimated to be in the vadose zone. In the DPA, roughly 1,100 pounds of VOCs is estimated. Many of the parameters in the mass calculation are estimates or have a range of possible values, adding additional uncertainty to the estimate. However, this mass calculation should not be construed as the exact amount of contamination to be removed from the site.

During the SVE test, DPE-1 (located in the HWA) and DPE-7 (located in the DPA) were able to produce 9.5 pounds per day (lb/day) and 4.7 lb/day, respectively. These removal rates are likely the maximum extraction rates to be expected. As the DPE system extracts mass from the vadose zone, the mass removal rate will decrease. The rate at which the removal rate declines depends on a variety of subsurface variables, such as the relationship between soil air permeabilities, the location of contamination in the vadose zone, and the location of the extraction well to the contamination in the specific geologic formation and its ability to effectively volatilize the contaminants. As the DPE RA progresses, the monitoring and performance data collected will be used to optimize the treatment system and expedite Site cleanup. An estimate for this site, based on other Superfund sites across the country, the expected time to reach cleanup goals would be approximately three years, but depending on subsurface conditions could take as long as 10 years.

5.5.2 System Performance Sampling

System samples will be required during system startup and operations to ensure proper operation of the proposed remediation equipment. A detailed summary of the proposed sample schedule is presented in Table 5-6. The sampling frequency and parameters are typical for DPE systems. The system inlet and outlet will need to be monitored for VOCs, as well as for other emissions criteria, such as acid gas emissions produced during the oxidation of chlorinated compounds, to ensure proper operation. The Permit to Operate issued by the South Coast Air Quality Management District, Los Angeles County Sanitation District permit and/or Los Angeles RWQCB Waste Discharge Requirement (WDR) permits may require additional parameters and monitoring frequency. The permits will determine the actual sampling frequencies, parameters, and analytical methods. The two later permits will be obtained under the OU 1 (groundwater) RA.

The system operators, with the help of the design engineers, will monitor long-term system performance. Key parameters, such as mass removals, discharge limitations, and run time efficiency, will be tracked and monitored. This data will allow for a complete review, and remedial process optimization (RPO) reviews will be implemented when necessary. As part of the RPO evaluation a recommendation for

switching off the emission controls system from CatOx to vapor granular activated carbon (VGAC) should be made as influent concentrations fall below approximately 150 ppmv.

5.5.3 Post-Remediation Confirmation Compliance Monitoring

Once contaminant concentrations have reached target cleanup levels or concentrations shown not to further impact groundwater above cleanup goals, the system will be turned off. This shutdown will allow for any potential rebound in the perched aquifer and vadose zone to occur. During this time, quarterly well sampling events will be conducted for six months to 1 year, to confirm the site is clean or if concentrations have rebounded to levels above the cleanup goals. The confirmation sampling will include at least one sample from each extraction and monitoring well. If results show evidence of rebound the system will be restarted. If concentrations remain below target cleanup levels, the Site will be recommended for closure sampling. Closure sampling will include the collection of soil gas samples at areas that were previously impacted and should have been remediated by the Removal Action. Step-out sample locations from these initial closure sample locations may be required by the Regulatory Agencies to demonstrate complete remediation of the site for closure.

5.6 TREATMENT PROCESS OPERATION DETAILS

The performance standards focus on these objectives:

1. Operator and personnel safety
2. Process efficiency with zero incidents
3. Cost effectiveness

The remediation system design will incorporate mechanical and electrical safeguards. Operator training, safety consciousness, and experience will be required for safe operation. The remediation system will include design flexibility to maximize process efficiency. Operator training, along with engineering technical services, will be required to meet the second objective of process efficiency with zero incidents. Accomplishing the first two objectives listed above, along with maximizing run time, will help achieve the third objective, cost effectiveness.

5.6.1 Media, Byproducts, and Process Rates

The media extracted from the HWA and DPA (soil vapor and perched groundwater) contain COCs. One recent addition to the COCs for the groundwater is 1,4-dioxane, which has been found in the last two groundwater monitoring rounds at concentrations ranging from 69 µg/L to 700 µg/L.

The anticipated flow rates from the DPE system will be approximately 5 to 10 gpm. This flow will be combined with the liquid generated from the caustic gas scrubber, for a maximum design rate of 12 gpm. The byproducts from the liquid treatment system will be treated water that meets the discharge requirements and spent LGAC.

The anticipated airflow from the DPE blower will be approximately 250 scfm. The byproducts from the catalytic oxidizer with the acid scrubbing process will be carbon dioxide discharged to the atmosphere and spent scrubber slurry (slightly basic) discharged to the sewer.

5.6.2 Waste Streams

Local Sanitary Sewer District

The discharge to the LACSD sanitary sewer has a maximum design rate of approximately 40 gpm. The quality discharge limitations for flow rates, temperature, pH, total dissolved solids (TDS), select metals, and volatile organics will be monitored and controlled carefully.

South Coast Air Quality Management District

The discharge to the atmosphere has a maximum design rate of approximately 300 scfm. The quality discharge limitations for flow rates, particulates, and volatile organics will be monitored and controlled carefully, and will meet South Coast Air Quality Management District requirements.

Granular-Activated Carbon

The granular activated carbon (GAC) will be selected, handled, and disposed of with the assistance of a pre-qualified carbon vendor. The plant operators will supervise the carbon changeouts. After changeout, the carbon vendor will perform the actual carbon removal and regeneration for future use or disposal to a licensed landfill.

5.6.3 Project Quality Checklist, Pertinent Codes, and Standards

The Project Quality Checklist includes a section on Process Safety, ARARs, Pertinent Codes, and Standards. This checklist is a living document that will follow the development of the design to the "final" stage and into installation. The checklist is currently anticipated to consist of approximately one page of text that may be incorporated into the PFD engineering drawing. It will also record the revision number, date, and initials of the reviewing engineer.

5.6.4 Other Technical Factors

As other technical factors that become apparent regarding the remediation system design or O&M, this RDR will be revised and recorded, as appropriate. All revisions to this RDR and/or engineering drawings must be approved in advance by EPA Region IX.

6.0 CONSTRUCTION AND IMPLEMENTATION

6.1 PLANS

The following plans must be provided before implementation of the RA

The Remedial Action Work Plan (RAWP) identifies construction and implementation issues to be carried out by the remedial action contractor. The RAWP will include a Site Health and Safety Plan (HASP), Sampling and Analysis Plan (SAP), and the Construction Quality Control Plan (CQCP).

A generalized CQCP has been included as Appendix K of this RDR. The RAWP, HASP, and SAP will be prepared by the remedial action contractor. The CQCP is intended to establish project organization and includes requirements for independent evaluation of the construction conformance to the design specifications. A draft SAP has also been prepared for the soil excavation and is provided in Appendix F.

A Construction Completion Report will be prepared by the construction contractor that includes discussion of field design changes, as-builts, quality control results, and health and safety documentation.

A generalized O&M manual for the DPE system has been included as Appendix L of this RDR; however, a more specific O&M manual, which includes system and vendor specific guidelines must be provided by the construction contractor. The O&M manual will be provided in conjunction with the RAWP. The O&M manual will include: (1) a description of the treatment system operation, (2) a description of potential operating problems and solutions, (3) specifications and maintenance schedules for all equipment.

6.2 DESIGN DRAWINGS

A full set of design drawings are attached in this volume of the RDR (Volume I). These design drawings for the RA have been previously referenced in prior sections of this report

6.3 SPECIFICATIONS

Complete specifications for the remedial action are provided in Volume III of this RDR and are intended to accompany the Drawings package for use in the field during construction.

6.4 SCHEDULE

A remedial action schedule is also included in this volume of the RDR (Volume I). The schedule includes both the OU 1 groundwater and OU 2 soil RA. Because a start date for the RA has not been determined, the schedule is based on days to complete each task following start of construction activities.

6.5 COST ESTIMATE

A remedial action cost estimate has been prepared based on the design presented herein and is provided in this volume of the RDR (Volume I). The cost estimate was prepared using prior experience and actual subcontractor bids. The cost estimate is expected to be within plus 15% and minus 5 percent.

The total estimated capital cost for the soil RA is approximately $2,201,000. This estimate assumes that construction of the RA occurs in the first year (i.e., capital costs are not inflated or discounted). This cost estimate includes the installation cost for the groundwater remediation equipment because extracted water from the perched aquifer will be treated as part of the soil RA.

The total present worth O&M cost is estimated at $836,000. This estimate accounts for inflation, as well as a discount rate of 7%, over the 3-year duration of the project. The cost associated with O&M of the groundwater treatment equipment is included in this estimate.

Based on these estimates of the capital and the present worth O&M costs, the total cost for implementation of the soil RA is approximately $3,037,000 in 2007 dollars.

6.6 CONTRACTOR QUALIFICATIONS

The contractor shall have three to five years experience with soil and groundwater remediation systems, piping systems, and excavation of remedial sites. The contractor will be responsible for the quality performance of work specified and preparation of products and reports required for completion of installation of systems. The contractor will also manage all solid wastes generated during construction and excavation of the site, including sampling and disposal of wastes. The contractor will provide technical and administrative services, monitor, supervise, review work performed, coordinate budgeting and scheduling to assure that the project is completed within budget, on schedule, and in accordance with approved procedures and applicable laws and regulations. All employees or subcontractors performing work on this site will be 40-hour trained under Code of Federal Regulations (CFR) 1910.120 and California Code of Regulations (CCR) Title 8-5192. The contractor shall be bonded and licensed in the state of California, providing references and descriptions of previous related work. The contractor will identify the potential physical and chemical hazards that may be encountered, and will specify health and safety control measures to be implemented throughout the course of the project.

6.7 COOPER DRUM PROPERTY SITE ACCESS

The area of the Cooper Drum property where remediation equipment will be installed must be vacated and secured during the RA. This will enable safety and prevent exposure to hazardous substances during installation and operation of the remedial systems.

6.8 OFF-SITE EASEMENT AND ACCESS

Since the Cooper Drum Site is bordered between Coryal Street and Rayo Avenue, with downgradiant extraction wells located on McCallum Avenue and additional monitoring wells to be located between Southern Avenue and McCallum Avenue, it is expected that the contractor will gain required permits, easements, and rights of way to access properties and/or public areas. The contractor will need to prepare traffic plans, and schedule traffic controls prior to the start of work, taking into consideration delays and restrictions in the work schedule to accommodate possible delays due to weather, traffic, and easement and access restrictions.

7.0 ENVIRONMENTAL AND PUBLIC IMPACT REDUCTION PLAN

The overall remediation system will be designed and constructed with the objective of reducing environmental and public impacts. As stated in Section 5.0, the system operation objectives will be to achieve:

- Operator and personnel safety
- Process efficiency with zero incidents
- Cost-effectiveness

These objectives will contribute to promoting little or no impact on the environment and the public. In addition, the remediation system will include security, electrical grounding, visual impact reduction, security fencing, and spill containment. This section details these additional environmental and public impact reduction plans.

7.1 SECURITY AND FENCING

System security features include automatic alarm settings on the process equipment and corresponding automatic notification to the responsible system operators. In addition, the system will include dusk-to-dawn lighting and automatic electrical shut-offs, in the event vandals tamper with the equipment and cause an auto-trip alarm. The system will include 8-foot chain-link fencing with lockable gates for entry and exit, and security slats that will block the view of the process equipment to reduce public curiosity.

7.2 ELECTRICAL GROUNDING

The remediation system will be designed and installed with electrical grounding to reduce the potential for operator electrocution. Electrical grounding is also required because this system will process impacted groundwater. Noise abatement features will be included on the key pieces of process equipment.

7.3 VISUAL SCREENING

The security fencing will be installed with colored slats in the chain link for visual screening. This type of fencing is very durable, secure, and suitable for this type of application. The screening should reduce complaints approximately visual concerns from local residents.

7.4 SPILL CONTAINMENT

The remediation system will be constructed on a concrete pad with spill containment features. The containment sump will include an alarm feature that will be tied into an automatic interlock for system shutdown.

8.0 REFERENCES

Johnson, P., C. Stanley, M. Kemblowski, D. Byers, J. Colhart, 1990. A Practical Approach to the Design, Operation, and Monitoring of In Situ Soil Venting Systems. *Ground Water Monitoring Review*, p. 163, Eq. 5. Spring.

United States Environmental Protection Agency (EPA), 2002. *Record of Decision, Cooper Drum Company, City of Southgate, California.*

EPA, 2004. *Guidance on Surface Soil Cleanup at Hazardous Waste Sites: Implementing Cleanup Levels*. May.

URS Group, Inc. (URS), 2002. *Cooper Drum Remedial Investigation Feasibility Study Report*.

URS, 2004. *Cooper Drum Superfund Site Remedial Design Supplemental Field Sampling Results Technical Memorandum*. April.

URS, 2006. *Cooper Drum Superfund Site Remedial Design Technical Memorandum for Field Sampling Results*. July.

TABLES

TABLE 2-1

Cleanup Levels for Contaminants of Concern

Medium	Contaminant of Concern	Cleanup Level	Basis for Cleanup Level	Risk at Cleanup Level
Soil (VOCs)	1,1-Dichloroethane (1,1-DCA)	Leachate <MCL[a]	VLEACH modeling	TBD
	1,1-Dichloroethene (1,1-DCE)	Leachate <MCL	VLEACH modeling	TBD
	1,2-Dichloroethane (1,2-DCA)	Leachate <MCL	VLEACH modeling	TBD
	1,2-Dichloropropane (1,2-DCP)	Leachate <MCL	VLEACH modeling	TBD
	1,2,3-Trichloropropane (1,2,3-TCP)	Leachate <PQL	VLEACH modeling	TBD
	Benzene	Leachate <MCL	VLEACH modeling	TBD
	cis-1,2-Dichloroethene (cis-1,2-DCE)	Leachate <MCL	VLEACH modeling	TBD
	trans-1,2-Dichloroethene (trans-1,2-DCE)	Leachate <MCL	VLEACH modeling	TBD
	Tetrachloroethene (PCE)	Leachate <MCL	VLEACH modeling	TBD
	Trichloroethene (TCE)	Leachate <MCL	VLEACH modeling	TBD
	Vinyl chloride	Leachate <MCL	VLEACH modeling	TBD
Soil (nonVOCs)	Aroclor-1254	870 µg/kg	Human health hazard	1 e-05
	Aroclor-1260	870 µg/kg	Human health hazard	1 e-05
	B (a)P-TE [b] – Benzo(a)anthracene – Benzo(a)pyrene – Benzo(b)fluoranthene – Benzo(k)fluoranthene – Chrysene – Dibenz(a,h)anthracene – Indeno(1,2,3-cd)pyrene	900 µg/kg	Background	Background
	Lead	400 mg/kg	Human health hazard	IEUBK Model
Groundwater (VOCs)	1,1-Dichloroethane (1,1-DCA)	5 µg/L	MCL	Cancer risk at 2.6e-06
	1,1-Dichloroethene (1,1-DCE)	6 µg/L	MCL	HI = 0.04
	1,2-Dichloroethane (1,2-DCA)	0.5 µg/L	MCL	Cancer risk at 4.0e-06
	1,2-Dichloropropane (1,2-DCP)	5 µg/L	MCL	Cancer risk at 3.1e-05
	1,2,3-Trichloropropane (1,2,3-TCP)	1 µg/L	PQL [c]	Cancer risk at 6.2e-04
	Benzene	1 µg/L	MCL	Cancer risk at 9.0e-06
	cis-1,2-Dichloroethene (cis-1,2-DCE)	6 µg/L	MCL	HI = 0.23
	trans-1,2-Dichloroethene (trans-1,2-DCE)	10 µg/L	MCL	HI = 0.19
	Tetrachloroethene (PCE)	5 µg/L	MCL	Cancer risk at 1.2e-05
	Trichloroethene (TCE)	5 µg/L	MCL	Cancer risk at 4.9e-06
	Vinyl chloride	0.5 µg/L	MCL	Cancer risk at 2.2e-05
Groundwater (SVOCs)	1,4-Dioxane	6.1 µg/L	PRG[d]	TBD

TABLE 2-1

(Continued)

[a] MCLs from Title 22 California Code of Regulation Section 64431 and 64444 unless otherwise specified.
[b] Based on upper tolerance limit (UTL) background benzo(a)pyrene-toxicity equivalent (B(a)P-TE) concentration for southern California PAH data set.
[c] No MCL established for 1,2,3-trichloropropane. The PQL was identified as a remedial goal for 1,2,3-trichloropropane.
[d] Cleanup action level will be reassessed and any revisions will be incorporated into the remedial action.

HI	=	hazard index
IEUBK Model	=	Integrated Exposure Uptake Model for Lead in Children
MCL	=	California primary maximum contaminant level
PRG	=	preliminary remediation goal
PQL	=	Practical quantification limit
SVOC	=	semivolatile organic compound
TBD	=	to be determined
VOC	=	volatile organic compound
µg/L	=	micrograms per liter
µg/kg	=	micrograms per kilogram

TABLE 4-1

Summary of Excavation Areas

Site Area	Excavation Area	COCs Exceeding Cleanup Levels	Area (sq ft)	Depth (ft)	Volume (cu yd)
Drum Processing Area	West (#1)	PAHs	2,475	2.5	229.2
Drum Processing Area	West (#2)	PAHs	900	5.0	166.7
Drum Processing Area	East (#1)	PAHs	300	5.0	55.5
Drum Processing Area	East (#2)	Lead, PAHs	1,700	5.0	314.8
Former Hard-Wash Area	West	Lead	1,200	2.5	111.1
Former Hard-Wash Area	East	Lead, PCBs	3,000	2.5	277.8
				Total Volume of Excavated Soil	1,155
				Soil Expansion (fluff) 10%	116
				Total	1,271

COC = contaminant of concern
cu yd = cubic yard
ft = feet
PAH = polycyclic aromatic hydrocarbon
PCB = polychlorinated biphenyl
sq ft = square feet

TABLE 4-2

Design Assumptions for Soil Removal Action

Non-VOC COCs: PCBs, PAHs, and lead.
Initial excavation limits determined from previous site investigations including May 2003.
Site consists of sandy silts interspersed with layers of clay.
Two excavation areas and depths each in the former HWA and DPA.
HWA west excavation summary:
– Surface area: 30 feet by 40 feet
– Excavation depth: 2.5 feet bgs
– Excavation area is covered with asphalt
– Estimated volume: 111 cubic yards
HWA east excavation summary:
– Surface area: 60 feet by 50 feet
– Excavation depth: 2.5 feet bgs
– Excavation area is covered with asphalt
– Estimated volume: 279 cubic yards
DPA west excavation summary:
– Surface area: 65 feet by 60 feet
– Excavation depth: 2.5 feet and 5.0 feet bgs
– Excavation requires shoring for depths greater than 4 feet bgs, or as identified by Competent Person
– Excavation area is covered with asphalt
– Estimated volume: 395 cubic yards
DPA east excavation summary:
– Surface area: 80 feet by 25 feet
– Excavation depth: 5 feet bgs
– Excavation requires shoring for depths greater than 4 feet bgs, or as identified by Competent Person
– Excavation area is covered with asphalt
– Estimated volume: 370 cubic yards
Total volume of soil (approximate): 1,271 cubic yards
Soil mass 1,653 tons (assuming 1.3 tons/cubic yard)
Confirmation samples to be collected as per the Confirmation Sampling Plan; along the excavation floor on 20-foot centers and on sidewalls every 40 feet below the zone of contamination.
Excavated material to be stockpiled on site. Profile sampling for off-site landfill disposal to be taken at approximate frequency of one sample for 150 cubic yards, or as required by the landfill.
Transport excavated material off site to appropriate landfill.

bgs = below ground surface
COC = contaminant of concern
DPA = Drum Processing Area
HWA = Hard-Wash Area
PAH = polycyclic aromatic hydrocarbon
PCB = polychlorinated biphenyl
VOC = volatile organic compound

TABLE 5-1

DPE-1 Test Data

Well Name	**DPE-1**	**VP-1 10 feet**	**VP-1 20 feet**	**VP-1 30 feet**	**VP-2 10 feet**	**VP-2 20 feet**	**VP-2 30 feet**	
Distance from SVE (feet)	–	20	20	20	45	45	45	
Screen Interval (feet bgs)	8–43	9.5–10	19.5–20	29.5–30	9.5–10	19.5–20	29.5–30	
Flow rate (cfm)	Vacuum (in. H_2O)	Vacuum (in. H_2O)	Vacuum (in. H_2O)	Vacuum (in. H_2O)	Vacuum (in. H_2O)	Vacuum (in. H_2O)	Vacuum (in. H_2O)	Elapsed Time
22	30	0	0.3–0.7	0.6–1.1	0.2	0.8–1.5	0	30 min.
53	65	0.1	0.7–0.9	1.5–3.3	0.3–0.5	1.6–3.2	0.4–0.9[a]	65 min.
88–98	130	3.5[a]	2.3–5.0	4.5	0.9	5–10	2.0–3.2	180 min.

[a] Changed gauge.

bgs = below ground surface
cfm = cubic feet per minute
DPE = dual-phase extraction
in. H_2O = inches of water
SVE = soil vapor extraction
VP = vapor point

Note: Vapor samples collected from DPE-1 at 10, 90, and 180 minutes (shutdown).

TABLE 5-2

DPE-7 Test Data

Well Name	DPE-7	VP-3 10 ft bgs	VP-3 20 ft bgs	VP-3 30 ft bgs	VP-4 10 ft bgs	VP-4 20 ft bgs	VP-4 30 ft bgs	
Distance from SVE (feet)	–	50	50	50	50	50	50	
Screen Interval (feet bgs)	8–48	9.5–10	19.5–20	29.5–30	9.5–10	19.5–20	29.5–30	
Flow rate (cfm)	Vacuum (in H_2O)	Vacuum (in H_2O)	Vacuum (in H_2O)	Vacuum (in H_2O)	Vacuum (in H_2O)	Vacuum (in H_2O)	Vacuum (in H_2O)	Elapsed Time
24.5	40	0.3–0.6	0.65–0.7	0.7–1.15	0.17–0.2	0.45–0.85	0.67–1.1	40 min.
45.8	80	0.6–1.3	0.7–1.5	1.15–2.9	0.2–0.5	0.85–1.62	1.1–2.7	105 min.
72.5	132	1.3–2.2	1.5–4.1	2.9–4.9	0.5–0.63[a]	1.62–4.13[a]	2.7–4.79	235 min.

[a] Changed gauge.

bgs = below ground surface
cfm = cubic feet per minute
DPE = dual-phase extraction
ft = feet
in. H_2O = inches of water
SVE = soil vapor extraction
VP = vapor point

Notes: Vacuums at all vapor probes gradually increased through the test, with the exception of the VP-4-10 feet, which stabilized after 120 minutes.

Vapor samples collected from DPE-1 at 10, 30, 100, and 235 minutes (shutdown).

TABLE 5-3

Soil Permeability Test Results, DPE-1[a]

Monitoring Well		Flowrate (ft^3/min)	Distance to Extraction Well (ft)	Absolute Pressure Extraction Well (in. H_2O)[b]	Absolute Pressure Monitoring Well (in. H_2O)	Air Permeability (Darcy)	Calculated Radius of Influence (ft)
Well No.	Screen Interval (ft)						
VP-1, 10	9–10	98	25	276.8	403.3	0.70	30.8
VP-1, 20	19–20	98	25	276.8	401.8	0.70	31.6
VP-1, 30	29–30	98	25	276.8	402.3	0.70	30.8
VP-2, 10	9–10	98	50	276.8	405.90	0.77	52.1
VP-2, 20	19–20	98	50	276.8	[c]	[c]	[c]
VP-2, 30	29–30	98	50	276.8	403.60	0.79	59.0

[a] Well casing radius 0.167 feet and well screen in the vadose zone 8 to 43 feet bgs.
[b] Absolute pressure is the difference between vacuum-influenced data and atmospheric pressure (406.8 in. H_2O).
[c] Field data appear high; not used in calculation.

bgs = below ground surface
DPE = dual-phase extraction
ft = feet
ft^3/min = cubic feet per minute
in. H_2O = inches of water
VP = vapor point

TABLE 5-4

Soil Permeability Test Results, DPE-7[a]

Monitoring Well		Flowrate (ft^3/min)	Distance to Extraction Well (ft)	Absolute Pressure Extraction Well (in. H_2O)[b]	Absolute Pressure Monitoring Well (in. H_2O)	Air Permeability (Darcy)	Calculated Radius of Influence (ft)
Well No.	Screen Interval (ft)						
VP-3, 10	9–10	98	50	276.8	404.6	0.80	64.9
VP-3, 20	19–20	98	50	276.8	402.7	0.79	62.0
VP-3, 30	29–30	98	50	276.8	401.9	0.80	64.9
VP-4, 10	9–10	98	50	276.8	406.2	0.77	51.3
VP-4, 20	19–20	98	50	276.8	402.7	0.79	62.0
VP-4, 30	29–30	98	50	276.8	402.0	0.80	64.5

[a] Well casing radius 0.167 feet and well screen in the vadose zone 8 to 43 feet bgs.
[b] Absolute pressure is the difference between vacuum-influenced data and atmospheric pressure (406.8 in. H_2O).

bgs = below ground surface
DPE = dual-phase extraction
ft = feet
ft^3/min = cubic feet per minute
in. H_2O = inches of water
VP = vapor point

TABLE 5-5

Distance and Direction of Vapor Monitor Points Relative to Dual-Phase Extraction Wells

HWA								**DPA**			
	DPE-1	**DPE-2**	**DPE-3**	**DPE-4**	**DPE-5**	**DPE-6**			**DPE-7**	**DPE-8**	**DPE-9**
VP-1[a]	**25 SE**	**73 S**	**108 W**	**41 NW**	**89 NE**	**108 E**		VP-3[a]	**48 NW**	**85 N**	**45 NE**
VP-2[a]	**50 W**	**83 SW**	**126 W**	**111 N**	**59.5 N**	**38 SE**		VP-4[a]	**52 SW**	**3.5 S**	**85 SE**
VP-9	**44 S**				**51 NE**			VP-5	**31 SE**	**49 NE**	
VP-10	**72 SE**			**25 S**				VP-6	**38 NE**		
VP-11			**52 S**	**63 NE**				VP-7		**52 NW**	**48 S**
VP-12			**28 E**	**92 NE**				VP-8			**40 NW**
VP-13		**53 SE**	**59 W**								
VP-14		**25 NE**	**75 E**								
VP-15		**52 W**			**50 NW**						
VP-16						**26 W**					
VP-17					**25 NW**	**55 S**					

[a] Existing vapor monitoring points.

DPE = dual-phase extraction
E = east
N = north
NE = northeast
NW = northwest
S = south
SE = southeast
VP = vapor (monitor) point
W = west

Notes: 1. Distance (in feet) and direction are from DPE to VP (i.e., VP-1 is located 25 feet southeast of DPE-1).
2. N, S, E, W, NE, SE, NW, and SW are general compass direction.

TABLE 5-6

Summary of Monitoring Schedule for DPE with Catalytic Oxidation/Caustic Scrubber Emission Control System and Residual Sampling Frequency

Parameter	Sample Location	Sample Frequency	
		Initial Operations[a]	Long-Term Operations
VOCs (EPA Modified Method TO-15 or approved equivalent)	System Inlet & Outlet	Weekly	Monthly
	Operating DPE Wells	Weekly	Quarterly
	Soil Vapor Monitor Points[b]	Weekly	Quarterly/ SemiAnnually/Annual
	AWS liquids	Once	Annually
	Scrubber Blowdown	Once	Annually
Acid Gas (HCl) (CARB Method 421 or approved equivalent)	System Outlet	Once	Annually
Dioxins/Furans (EPA Method 23 or approved equivalent)	System Outlet	Once	Annually
	AWS liquids	Once	Annually
	Scrubber Blowdown	Once	Annually
$CO/SO_2/NO_x/PM$ (CARB Methods 5 and 10)	System Outlet	Once	Annually

[a] Initial operations typically last one to four weeks. During this time, the remediation equipment is being fine tuned to operate at maximum efficiency given the Site conditions.

[b] Initially all soil vapor monitor points will be sampled quarterly. As concentrations decline, the sampling frequency shall decline as follows:

- Quarterly – soil vapor concentration greater than cleanup goals;
- Semiannual – soil vapor concentrations less than cleanup goals during the previous sample event;
- Annual – soil vapor concentrations less than cleanup goal for two consecutive sample events;
- Stop sampling a well, until confirmation sampling, if soil vapor concentrations less than cleanup goal for three consecutive sample events.
- If concentrations increase above cleanup goals at any time, the well shall resume the quarterly sampling frequency and follow the process listed above.

AWS = air/water separator
CARB = California Air Resources Board
CO = carbon monoxide
DPE = dual-phase extraction
EPA = United States Environmental Protection Agency
HCl = hydrochloric acid
NO_x = nitrogen oxides
PM = particulate matter
SO_2 = sulfur dioxide
VOC = volatile organic compound

FIGURES

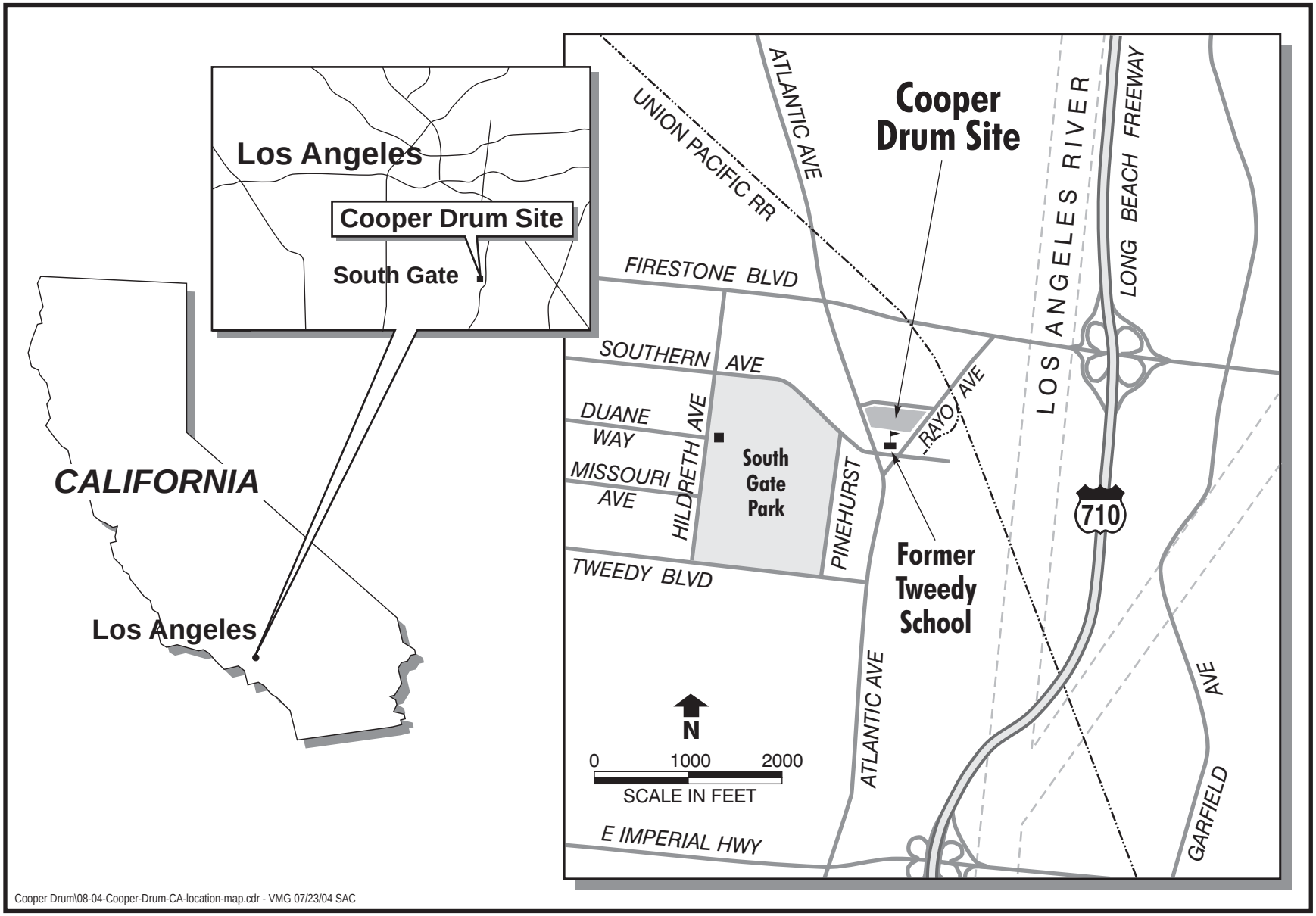

Figure 1-1. Site Location Map

URS

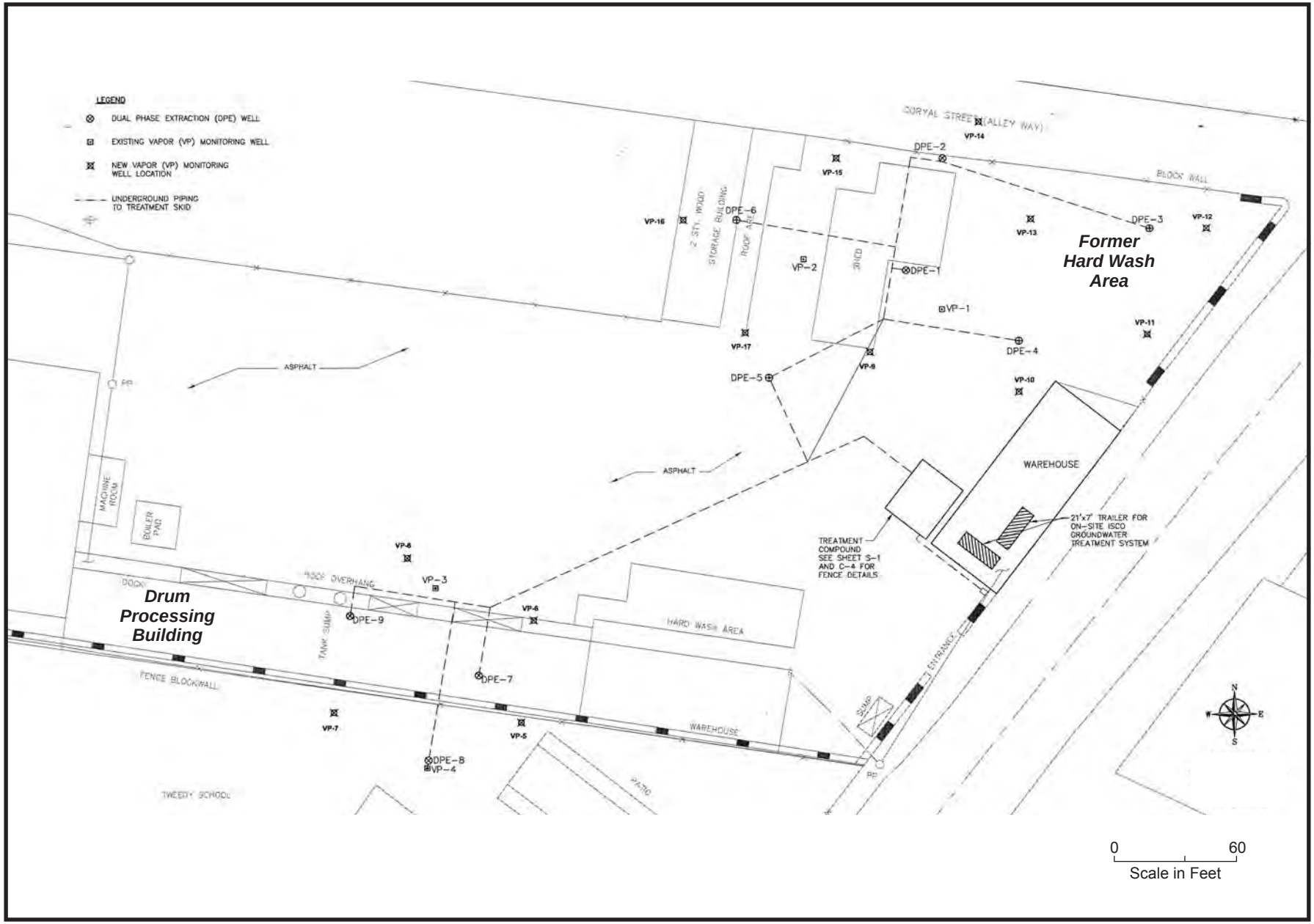

Site Map and Piping Layout

Figure 1-2

Cooper Drum\09-07-site-map-piping-scan.cdr - LCT 09.06.07 SAC

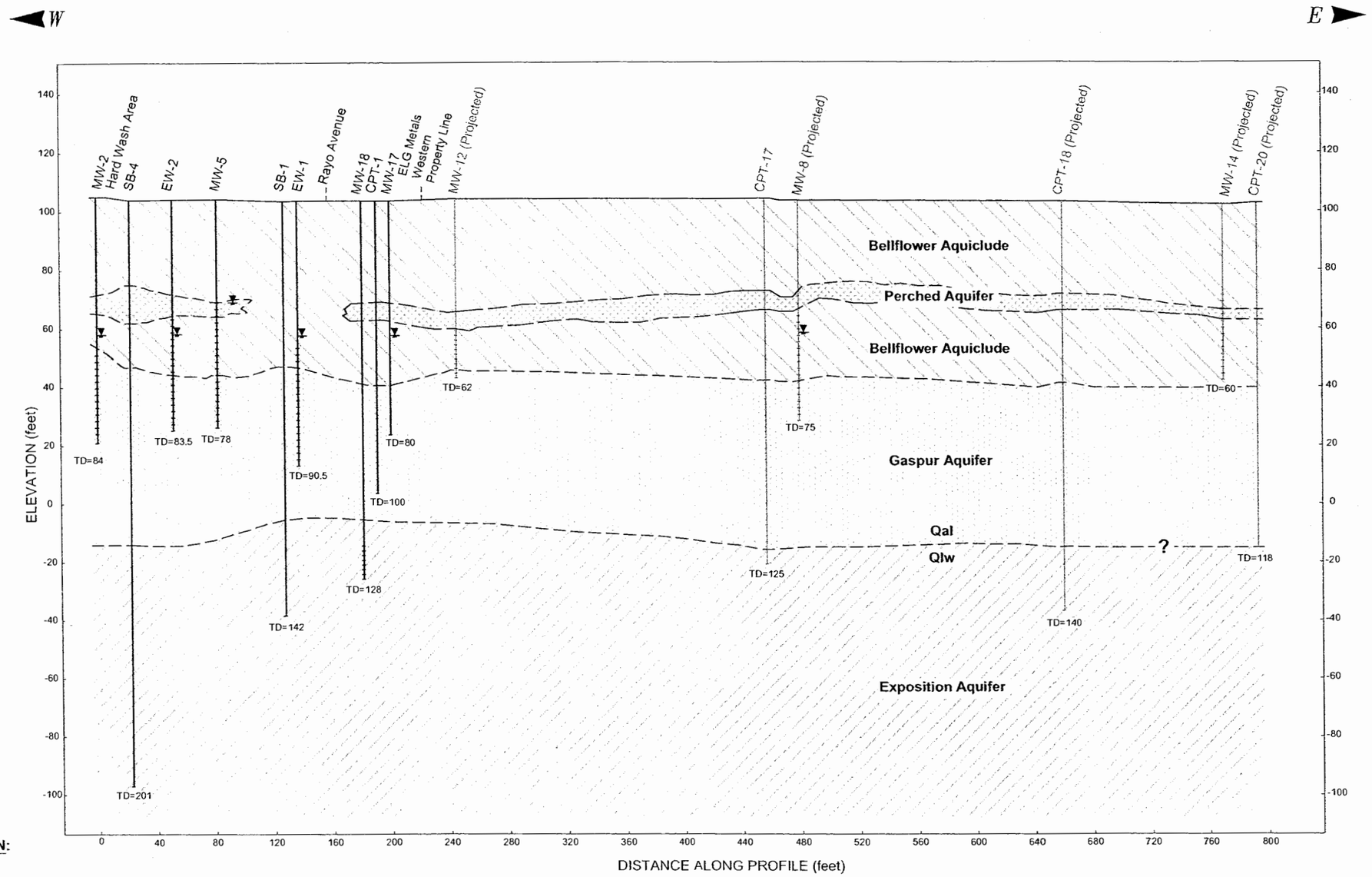

EXPLANATION:

CPT-1 — Borehole Number

Well Construction

Screened Interval

Water Level December 14, 2000

Qal = Quaternary Alluvium
Qlw = Upper Pleistocare lakewood formation

Horizontal Scale (feet)
Scale: 1" = 80'
Vertical Exaggeration: 4x
Scale: 1" = 40'

PLOT BY: RTAYLOR - Dec 19, 2006 - 7:32:04pm
DRAWING: T:\current-work files\COOPER-DRUM\Ed-Cooper-drum-12-19-06\04006059F2-1_XSAAC.DWG

XREFS:

URS

Generalized Geologic Cross Section B-B'

Figure 2-1

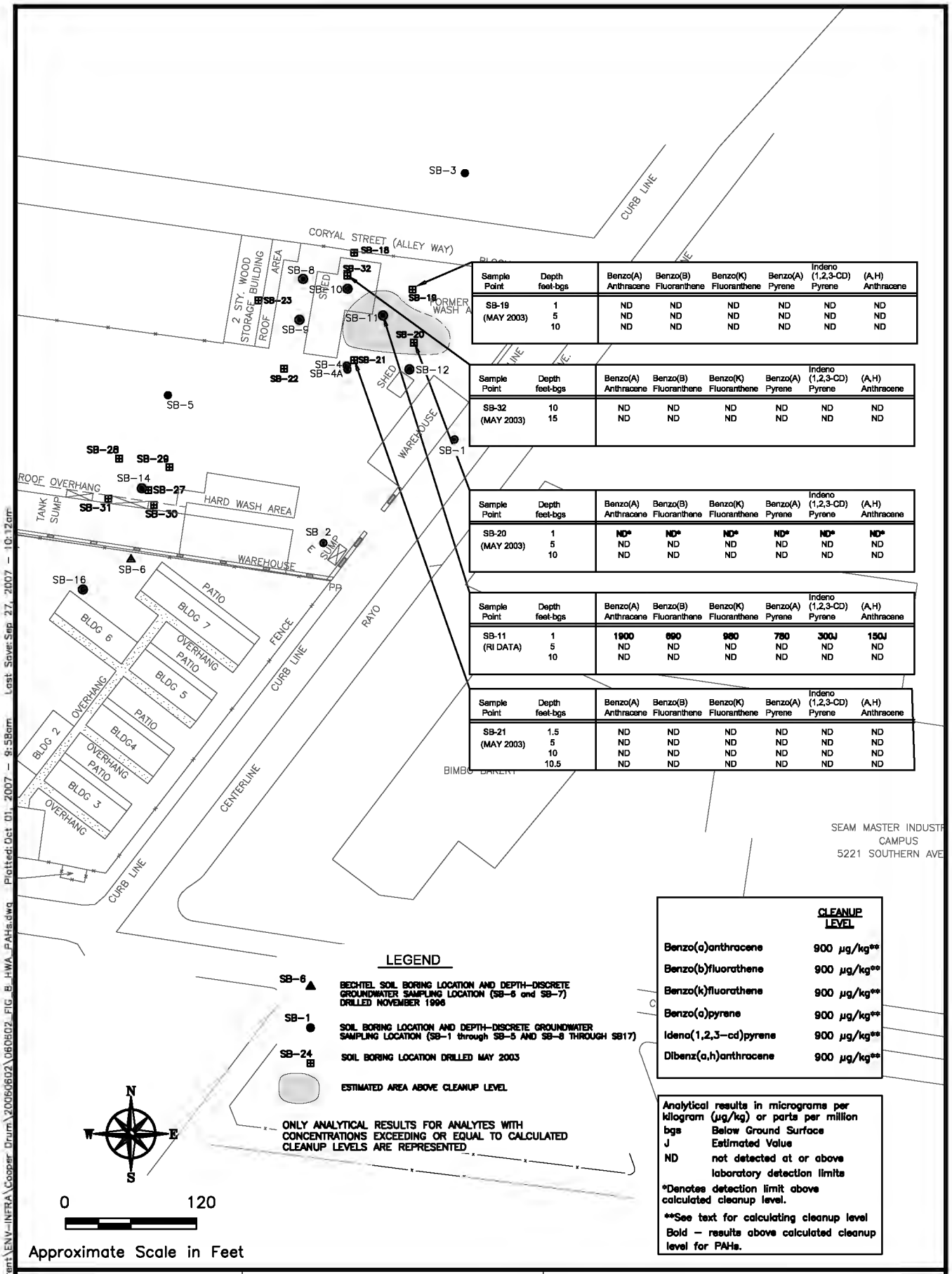

Sample Point	Depth feet-bgs	Benzo(A) Anthracene	Benzo(B) Fluoranthene	Benzo(K) Fluoranthene	Benzo(A) Pyrene	Indeno (1,2,3-CD) Pyrene	(A,H) Anthracene
SB-19 (MAY 2003)	1	ND	ND	ND	ND	ND	ND
	5	ND	ND	ND	ND	ND	ND
	10	ND	ND	ND	ND	ND	ND

Sample Point	Depth feet-bgs	Benzo(A) Anthracene	Benzo(B) Fluoranthene	Benzo(K) Fluoranthene	Benzo(A) Pyrene	Indeno (1,2,3-CD) Pyrene	(A,H) Anthracene
SB-32 (MAY 2003)	10	ND	ND	ND	ND	ND	ND
	15	ND	ND	ND	ND	ND	ND

Sample Point	Depth feet-bgs	Benzo(A) Anthracene	Benzo(B) Fluoranthene	Benzo(K) Fluoranthene	Benzo(A) Pyrene	Indeno (1,2,3-CD) Pyrene	(A,H) Anthracene
SB-20 (MAY 2003)	1	ND*	ND*	ND*	ND*	ND*	ND*
	5	ND	ND	ND	ND	ND	ND
	10	ND	ND	ND	ND	ND	ND

Sample Point	Depth feet-bgs	Benzo(A) Anthracene	Benzo(B) Fluoranthene	Benzo(K) Fluoranthene	Benzo(A) Pyrene	Indeno (1,2,3-CD) Pyrene	(A,H) Anthracene
SB-11 (RI DATA)	1	**1900**	**690**	**980**	**780**	**300J**	**150J**
	5	ND	ND	ND	ND	ND	ND
	10	ND	ND	ND	ND	ND	ND

Sample Point	Depth feet-bgs	Benzo(A) Anthracene	Benzo(B) Fluoranthene	Benzo(K) Fluoranthene	Benzo(A) Pyrene	Indeno (1,2,3-CD) Pyrene	(A,H) Anthracene
SB-21 (MAY 2003)	1.5	ND	ND	ND	ND	ND	ND
	5	ND	ND	ND	ND	ND	ND
	10	ND	ND	ND	ND	ND	ND
	10.5	ND	ND	ND	ND	ND	ND

	CLEANUP LEVEL
Benzo(a)anthracene	900 µg/kg**
Benzo(b)fluorathene	900 µg/kg**
Benzo(k)fluorathene	900 µg/kg**
Benzo(a)pyrene	900 µg/kg**
Ideno(1,2,3-cd)pyrene	900 µg/kg**
Dibenz(a,h)anthracene	900 µg/kg**

Analytical results in micrograms per kilogram (µg/kg) or parts per million

bgs Below Ground Surface

J Estimated Value

ND not detected at or above laboratory detection limits

*Denotes detection limit above calculated cleanup level.

**See text for calculating cleanup level

Bold – results above calculated cleanup level for PAHs.

URS
2870 GATEWAY OAKS DRIVE, SUITE 300
SACRAMENTO, CA 95833

Cooper Drum Company
South Gate, California

FIGURE 3-1
Soil Sampling Results - PAHs
Former Hard Wash Area

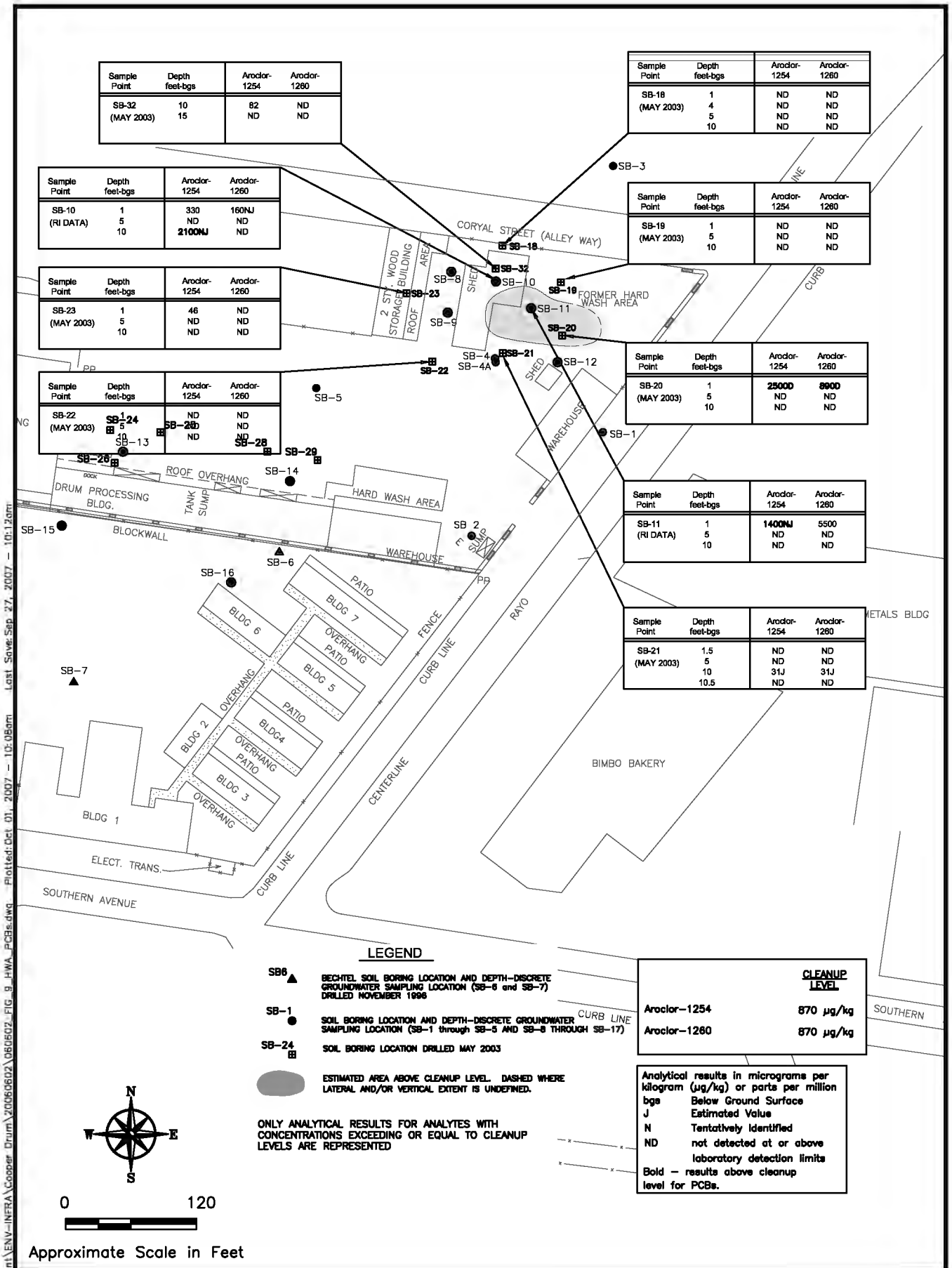

Sample Point	Depth feet-bgs	Aroclor-1254	Aroclor-1260
SB-32 (MAY 2003)	10	82	ND
	15	ND	ND

Sample Point	Depth feet-bgs	Aroclor-1254	Aroclor-1260
SB-10 (RI DATA)	1	330	160NJ
	5	ND	ND
	10	**2100NJ**	ND

Sample Point	Depth feet-bgs	Aroclor-1254	Aroclor-1260
SB-23 (MAY 2003)	1	46	ND
	5	ND	ND
	10	ND	ND

Sample Point	Depth feet-bgs	Aroclor-1254	Aroclor-1260
SB-22 (MAY 2003)	1	ND	ND
	5	ND	ND
	10	ND	ND

Sample Point	Depth feet-bgs	Aroclor-1254	Aroclor-1260
SB-18 (MAY 2003)	1	ND	ND
	4	ND	ND
	5	ND	ND
	10	ND	ND

Sample Point	Depth feet-bgs	Aroclor-1254	Aroclor-1260
SB-19 (MAY 2003)	1	ND	ND
	5	ND	ND
	10	ND	ND

Sample Point	Depth feet-bgs	Aroclor-1254	Aroclor-1260
SB-20 (MAY 2003)	1	**2500D**	**890D**
	5	ND	ND
	10	ND	ND

Sample Point	Depth feet-bgs	Aroclor-1254	Aroclor-1260
SB-11 (RI DATA)	1	**1400NJ**	5500
	5	ND	ND
	10	ND	ND

Sample Point	Depth feet-bgs	Aroclor-1254	Aroclor-1260
SB-21 (MAY 2003)	1.5	ND	ND
	5	ND	ND
	10	31J	31J
	10.5	ND	ND

URS
2870 GATEWAY OAKS DRIVE, SUITE 300
SACRAMENTO, CA 95833

Cooper Drum Company
South Gate, California

FIGURE 3-2
Soil Sampling Results - PCBs
Former Hard Wash Area

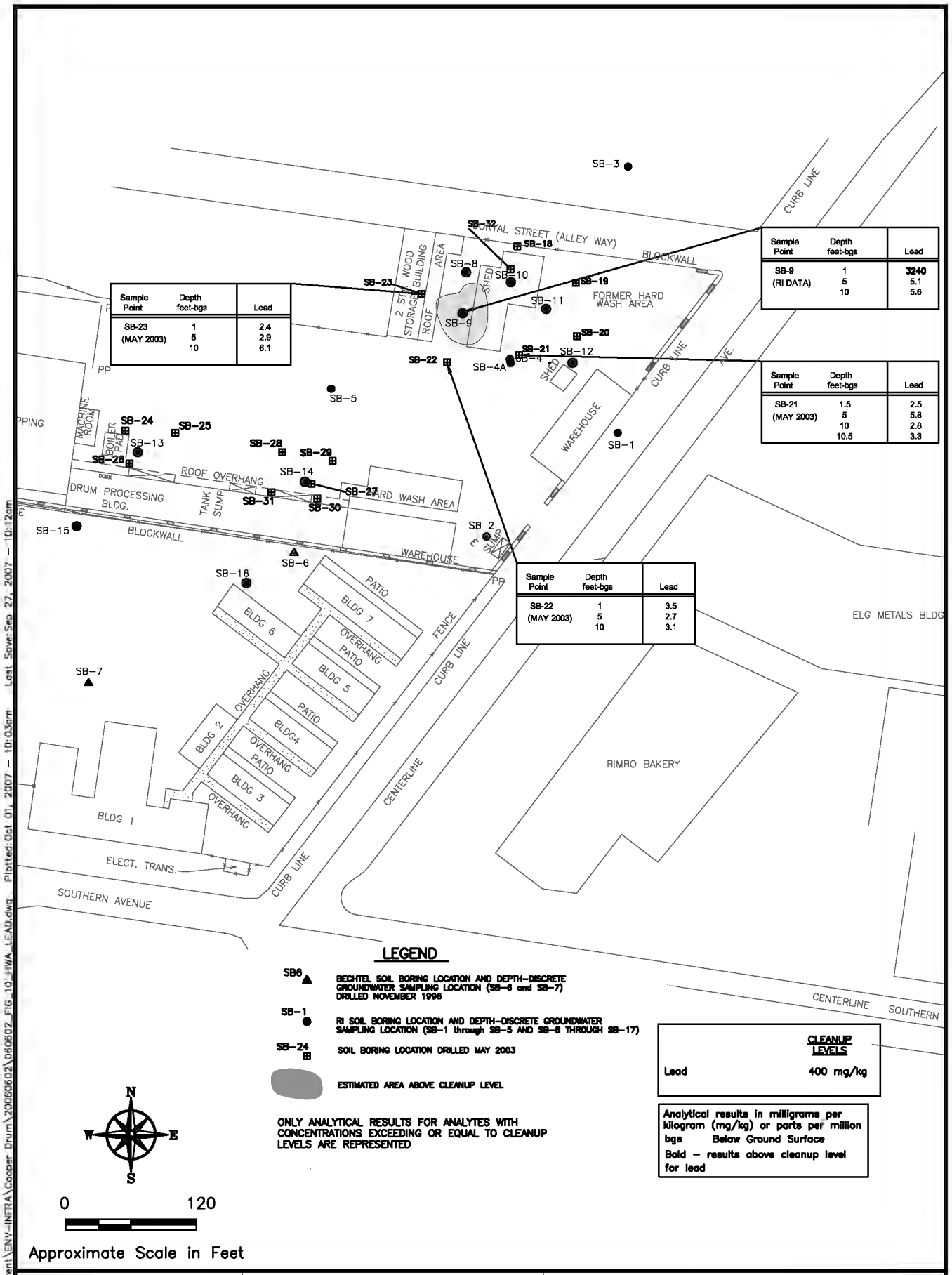

Sample Point	Depth feet-bgs	Lead
SB-23 (MAY 2003)	1	2.4
	5	2.9
	10	6.1

Sample Point	Depth feet-bgs	Lead
SB-9 (RI DATA)	1	**3240**
	5	5.1
	10	5.6

Sample Point	Depth feet-bgs	Lead
SB-21 (MAY 2003)	1.5	2.5
	5	5.8
	10	2.8
	10.5	3.3

Sample Point	Depth feet-bgs	Lead
SB-22 (MAY 2003)	1	3.5
	5	2.7
	10	3.1

URS
2870 GATEWAY OAKS DRIVE, SUITE 300
SACRAMENTO, CA 95833

Cooper Drum Company
South Gate, California

FIGURE 3-3
Soil Sampling Results - Lead
Former Hard Wash Area

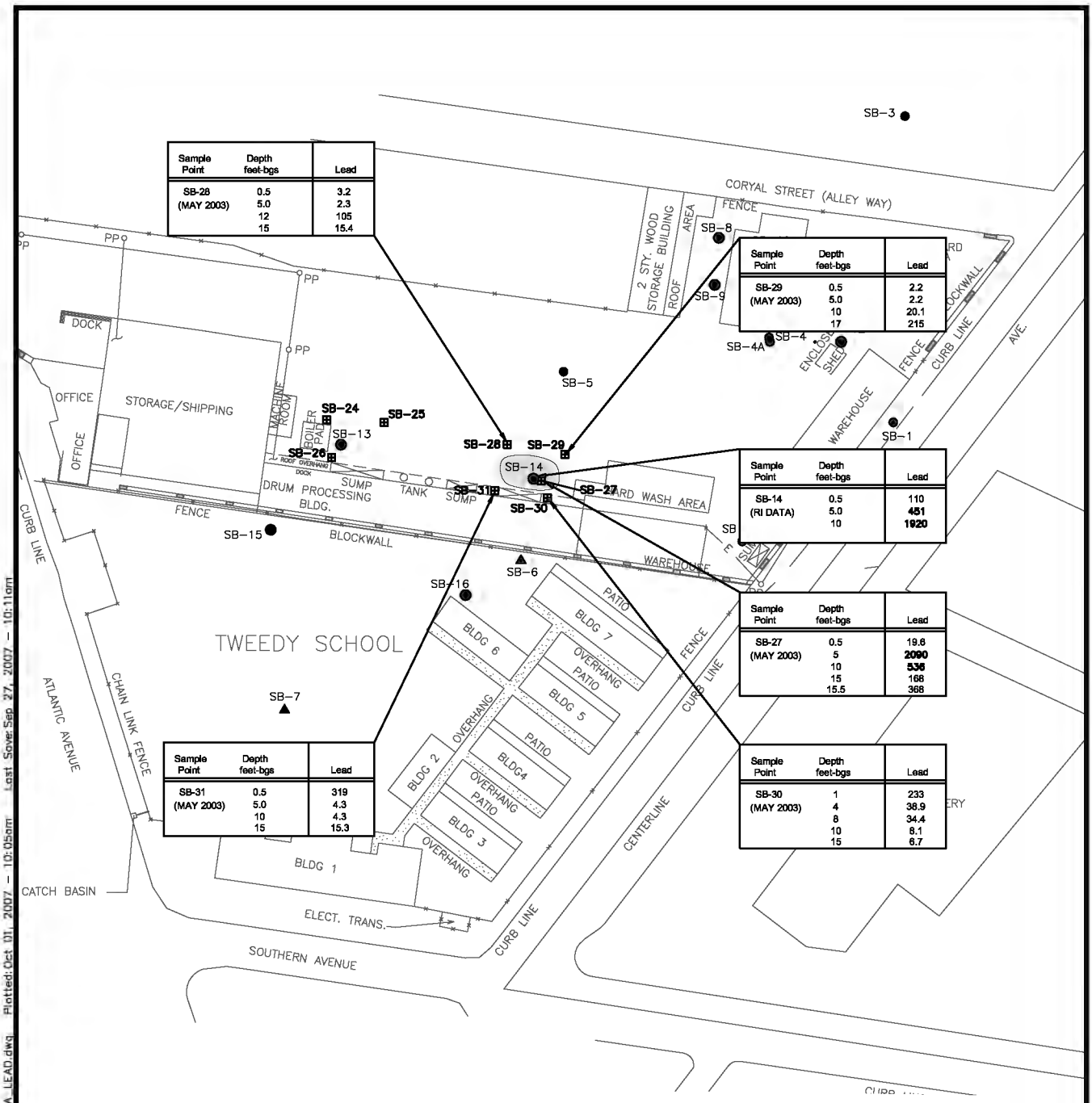

Sample Point	Depth feet-bgs	Lead
SB-28 (MAY 2003)	0.5	3.2
	5.0	2.3
	12	105
	15	15.4

Sample Point	Depth feet-bgs	Lead
SB-29 (MAY 2003)	0.5	2.2
	5.0	2.2
	10	20.1
	17	215

Sample Point	Depth feet-bgs	Lead
SB-14 (RI DATA)	0.5	110
	5.0	**451**
	10	**1920**

Sample Point	Depth feet-bgs	Lead
SB-27 (MAY 2003)	0.5	19.6
	5	**2090**
	10	**536**
	15	168
	15.5	368

Sample Point	Depth feet-bgs	Lead
SB-31 (MAY 2003)	0.5	319
	5.0	4.3
	10	4.3
	15	15.3

Sample Point	Depth feet-bgs	Lead
SB-30 (MAY 2003)	1	233
	4	38.9
	8	34.4
	10	8.1
	15	6.7

LEGEND

SB6 ▲ BECHTEL SOIL BORING LOCATION AND DEPTH-DISCRETE GROUNDWATER SAMPLING LOCATION (SB-6 and SB-7) DRILLED NOVEMBER 1996

SB-1 ● RI SOIL BORING LOCATION AND DEPTH-DISCRETE GROUNDWATER SAMPLING LOCATION (SB-1 through SB-5 AND SB-8 THROUGH SB-17)

SB-24 ⊞ SOIL BORING LOCATION DRILLED MAY 2003

ESTIMATED AREA ABOVE CLEANUP LEVEL

ONLY ANALYTICAL RESULTS FOR ANALYTES WITH CONCENTRATIONS EXCEEDING OR EQUAL TO CLEANUP LEVELS ARE REPRESENTED

	CLEANUP LEVELS
Lead	400 mg/kg

Analytical results in milligrams per kilogram (mg/kg) or parts per million

bgs Below Ground Surface

Bold – results above cleanup level for lead

ND – not detected at or above laboratory detection limits

N W E S

0 120

Approximate Scale in Feet

URS
2870 GATEWAY OAKS DRIVE, SUITE 300
SACRAMENTO, CA 95833

Cooper Drum Company
South Gate, California

FIGURE 3-4
Soil Sampling Results - Lead
Drum Processing Area

H:\CA00\Current\ENV-INFRA\Cooper Drum\20060602\060602_FIG_12_DPA_LEAD.dwg Plotted: Oct 01, 2007 - 10:05am Last Save: Sep 27, 2007 - 10:11am

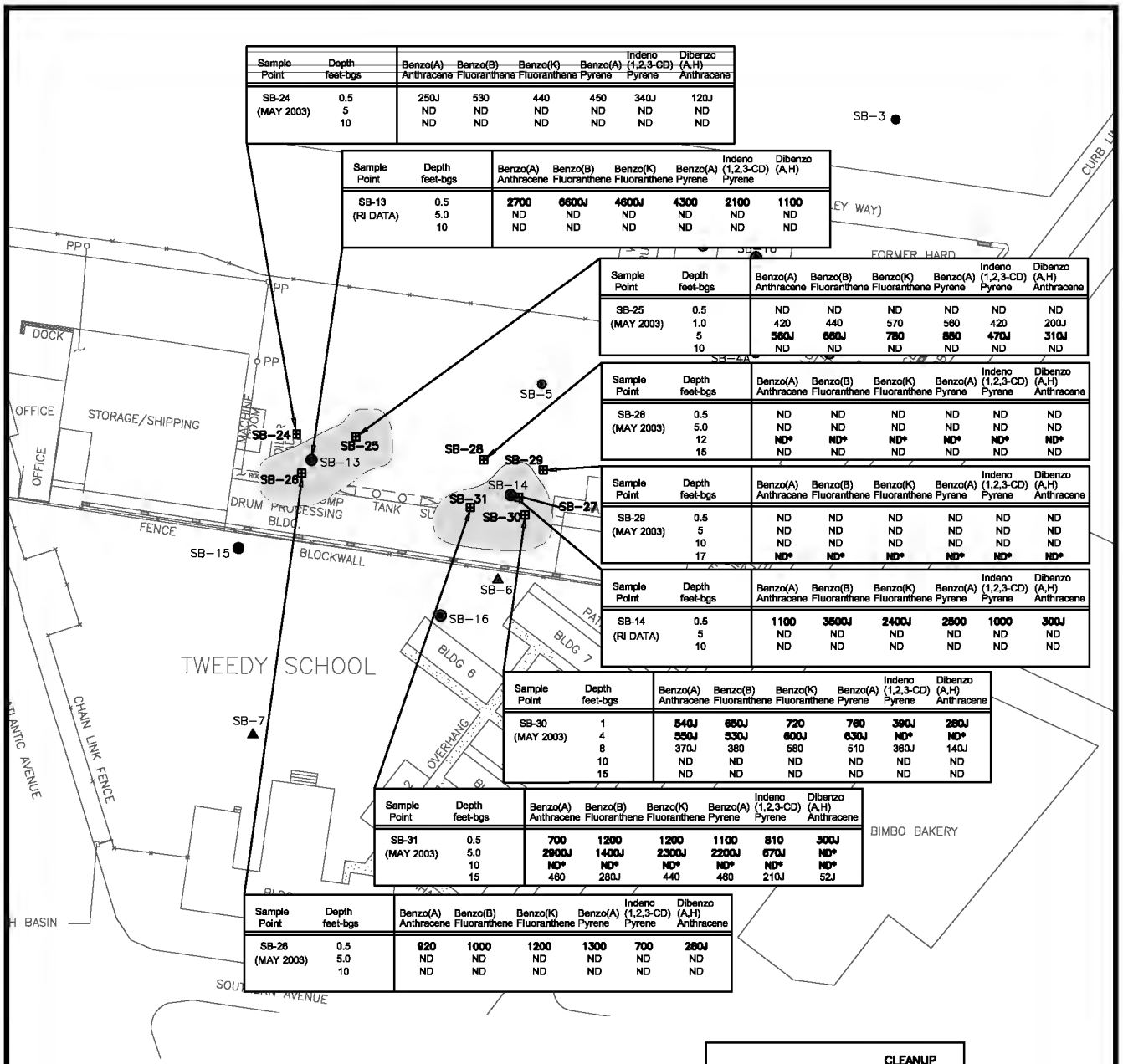

Sample Point	Depth feet-bgs	Benzo(A) Anthracene	Benzo(B) Fluoranthene	Benzo(K) Fluoranthene	Benzo(A) Pyrene	Indeno (1,2,3-CD) Pyrene	Dibenzo (A,H) Anthracene
SB-24 (MAY 2003)	0.5	250J	530	440	450	340J	120J
	5	ND	ND	ND	ND	ND	ND
	10	ND	ND	ND	ND	ND	ND

Sample Point	Depth feet-bgs	Benzo(A) Anthracene	Benzo(B) Fluoranthene	Benzo(K) Fluoranthene	Benzo(A) Pyrene	Indeno (1,2,3-CD) Pyrene	Dibenzo (A,H)
SB-13 (RI DATA)	0.5	**2700**	**6600J**	**4600J**	**4300**	**2100**	**1100**
	5.0	ND	ND	ND	ND	ND	ND
	10	ND	ND	ND	ND	ND	ND

Sample Point	Depth feet-bgs	Benzo(A) Anthracene	Benzo(B) Fluoranthene	Benzo(K) Fluoranthene	Benzo(A) Pyrene	Indeno (1,2,3-CD) Pyrene	Dibenzo (A,H) Anthracene
SB-25 (MAY 2003)	0.5	ND	ND	ND	ND	ND	ND
	1.0	420	440	570	560	420	200J
	5	**560J**	**660J**	**780**	**880**	**470J**	**310J**
	10	ND	ND	ND	ND	ND	ND

Sample Point	Depth feet-bgs	Benzo(A) Anthracene	Benzo(B) Fluoranthene	Benzo(K) Fluoranthene	Benzo(A) Pyrene	Indeno (1,2,3-CD) Pyrene	Dibenzo (A,H) Anthracene
SB-28 (MAY 2003)	0.5	ND	ND	ND	ND	ND	ND
	5.0	ND	ND	ND	ND	ND	ND
	12	**ND***	**ND***	**ND***	**ND***	**ND***	**ND***
	15	ND	ND	ND	ND	ND	ND

Sample Point	Depth feet-bgs	Benzo(A) Anthracene	Benzo(B) Fluoranthene	Benzo(K) Fluoranthene	Benzo(A) Pyrene	Indeno (1,2,3-CD) Pyrene	Dibenzo (A,H) Anthracene
SB-29 (MAY 2003)	0.5	ND	ND	ND	ND	ND	ND
	5	ND	ND	ND	ND	ND	ND
	10	ND	ND	ND	ND	ND	ND
	17	**ND***	**ND***	**ND***	**ND***	**ND***	**ND***

Sample Point	Depth feet-bgs	Benzo(A) Anthracene	Benzo(B) Fluoranthene	Benzo(K) Fluoranthene	Benzo(A) Pyrene	Indeno (1,2,3-CD) Pyrene	Dibenzo (A,H) Anthracene
SB-14 (RI DATA)	0.5	**1100**	**3500J**	**2400J**	**2500**	**1000**	**300J**
	5	ND	ND	ND	ND	ND	ND
	10	ND	ND	ND	ND	ND	ND

Sample Point	Depth feet-bgs	Benzo(A) Anthracene	Benzo(B) Fluoranthene	Benzo(K) Fluoranthene	Benzo(A) Pyrene	Indeno (1,2,3-CD) Pyrene	Dibenzo (A,H) Anthracene
SB-30 (MAY 2003)	1	**540J**	**650J**	**720**	**760**	**390J**	**280J**
	4	**550J**	**530J**	**600J**	**630J**	**ND***	**ND***
	8	370J	380	580	510	360J	140J
	10	ND	ND	ND	ND	ND	ND
	15	ND	ND	ND	ND	ND	ND

Sample Point	Depth feet-bgs	Benzo(A) Anthracene	Benzo(B) Fluoranthene	Benzo(K) Fluoranthene	Benzo(A) Pyrene	Indeno (1,2,3-CD) Pyrene	Dibenzo (A,H) Anthracene
SB-31 (MAY 2003)	0.5	**700**	**1200**	**1200**	**1100**	**810**	**300J**
	5.0	**2900J**	**1400J**	**2300J**	**2200J**	**670J**	**ND***
	10	**ND***	**ND***	**ND***	**ND***	**ND***	**ND***
	15	460	280J	440	460	210J	52J

Sample Point	Depth feet-bgs	Benzo(A) Anthracene	Benzo(B) Fluoranthene	Benzo(K) Fluoranthene	Benzo(A) Pyrene	Indeno (1,2,3-CD) Pyrene	Dibenzo (A,H) Anthracene
SB-26 (MAY 2003)	0.5	**920**	**1000**	**1200**	**1300**	**700**	**280J**
	5.0	ND	ND	ND	ND	ND	ND
	10	ND	ND	ND	ND	ND	ND

LEGEND

SB6 ▲ BECHTEL SOIL BORING LOCATION AND DEPTH-DISCRETE GROUNDWATER SAMPLING LOCATION (SB-6 and SB-7) DRILLED NOVEMBER 1996.

SB-1 ● RI SOIL BORING LOCATION AND DEPTH-DISCRETE GROUNDWATER SAMPLING LOCATION (SB-1 through SB-5 AND SB-6 THROUGH SB17).

SB-24 ⊞ SOIL BORING LOCATION DRILLED MAY 2003

ESTIMATED AREA ABOVE CLEANUP LEVEL. DASHED WHERE LATERAL AND/OR VERTICAL EXTENT IS UNDEFINED.

ONLY ANALYTICAL RESULTS FOR ANALYTES WITH CONCENTRATIONS EXCEEDING OR EQUAL TO CALCULATED CLEANUP LEVELS ARE REPRESENTED

	CLEANUP LEVELS
Benzo(a)anthracene	900 µg/kg**
Benzo(b)fluorathene	900 µg/kg**
Benzo(k)fluorathene	900 µg/kg**
Benzo(a)pyrene	900 µg/kg**
Ideno(1,2,3-cd)pyrene	900 µg/kg**
Dibenz(a,h)anthracene	900 µg/kg**

Analytical results in micrograms per kilogram (µg/kg) or parts per million

bgs Below Ground Surface

J Estimated Value

ND not detected at or above laboratory detection limits

Bold – results above calculated cleanup level for PAHs.

*Denotes detection limit above cleanup level.

**See text for calculating cleanup level

N W E S

0 120

Approximate Scale in Feet

URS
2870 GATEWAY OAKS DRIVE, SUITE 300
SACRAMENTO, CA 95833

Cooper Drum Company
South Gate, California

FIGURE 3-5
Soil Sampling Results - PAHs
Drum Processing Area

H:\CADD\CURRENT\ENV-INFRA\COOPER DRUM\20060602\060602_FIG_11_DPA_PAHS.DWG

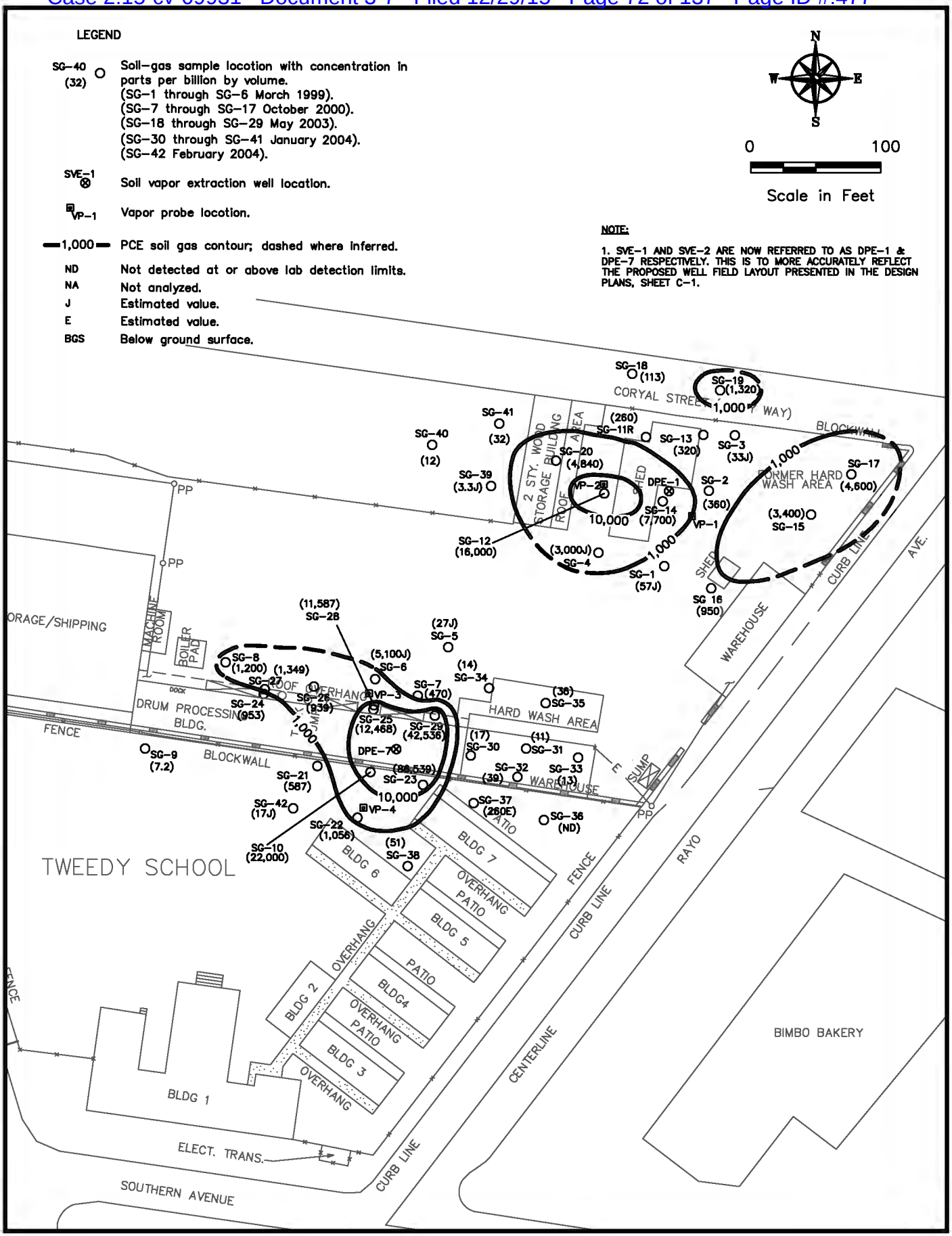

PLOT BY: ROBERT_P_TAYLOR - Sep 27, 2007 - 7:03:09am

XREFS: L:\Projects\Cooper\20020212\xrefbase.dwg
IMAGES: cooper drum.jpg

DRAWING: 040605FIG3-6_PCE_10bgs.dwg
DRAWING: J:\Cooper Drum\CADD\Archival\20040605\

URS

PCE Soil Gas Contours at 10 Feet BGS

Figure 3-6

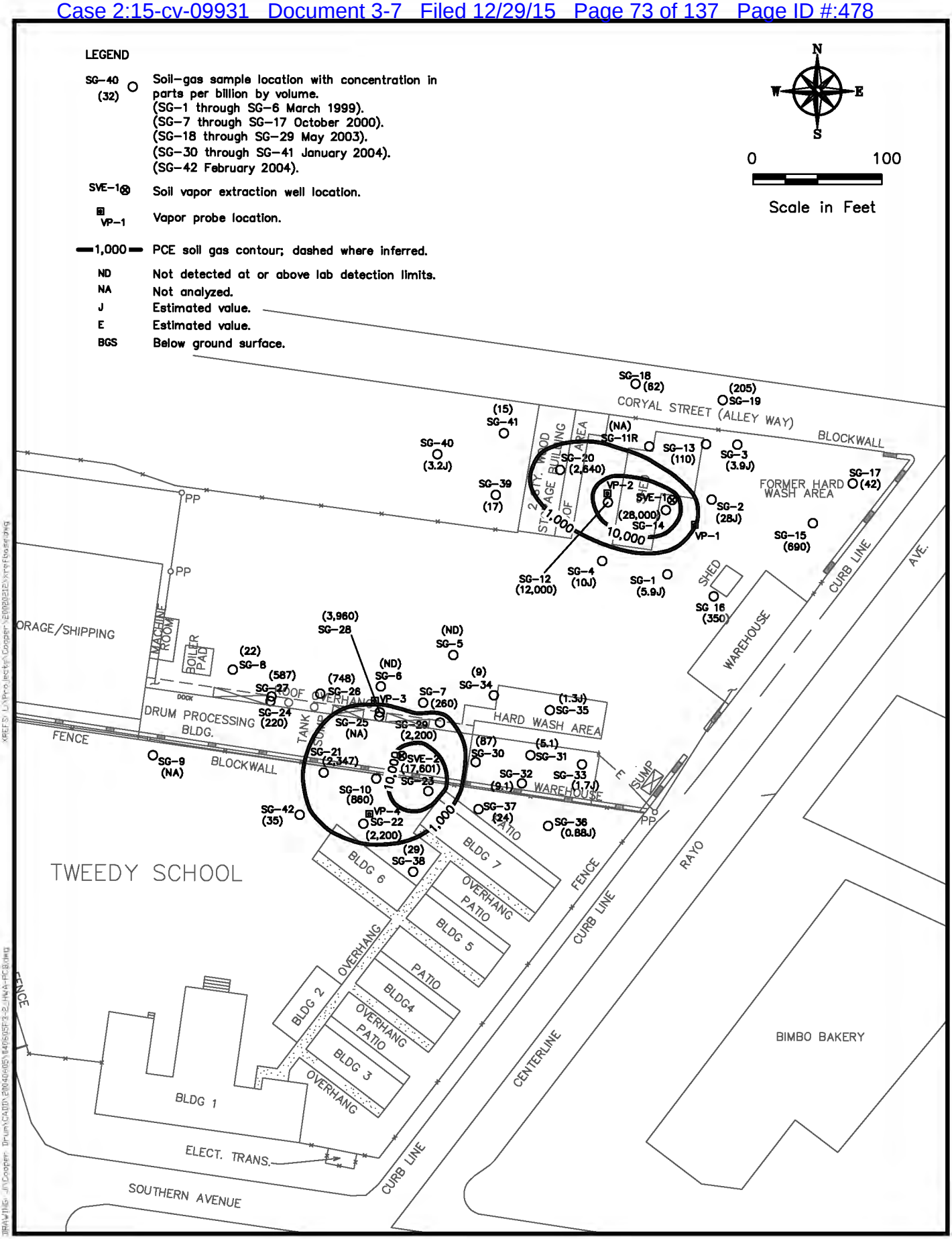

URS

PCE Soil Gas Contours at 20 Feet BGS

Figure 3-7

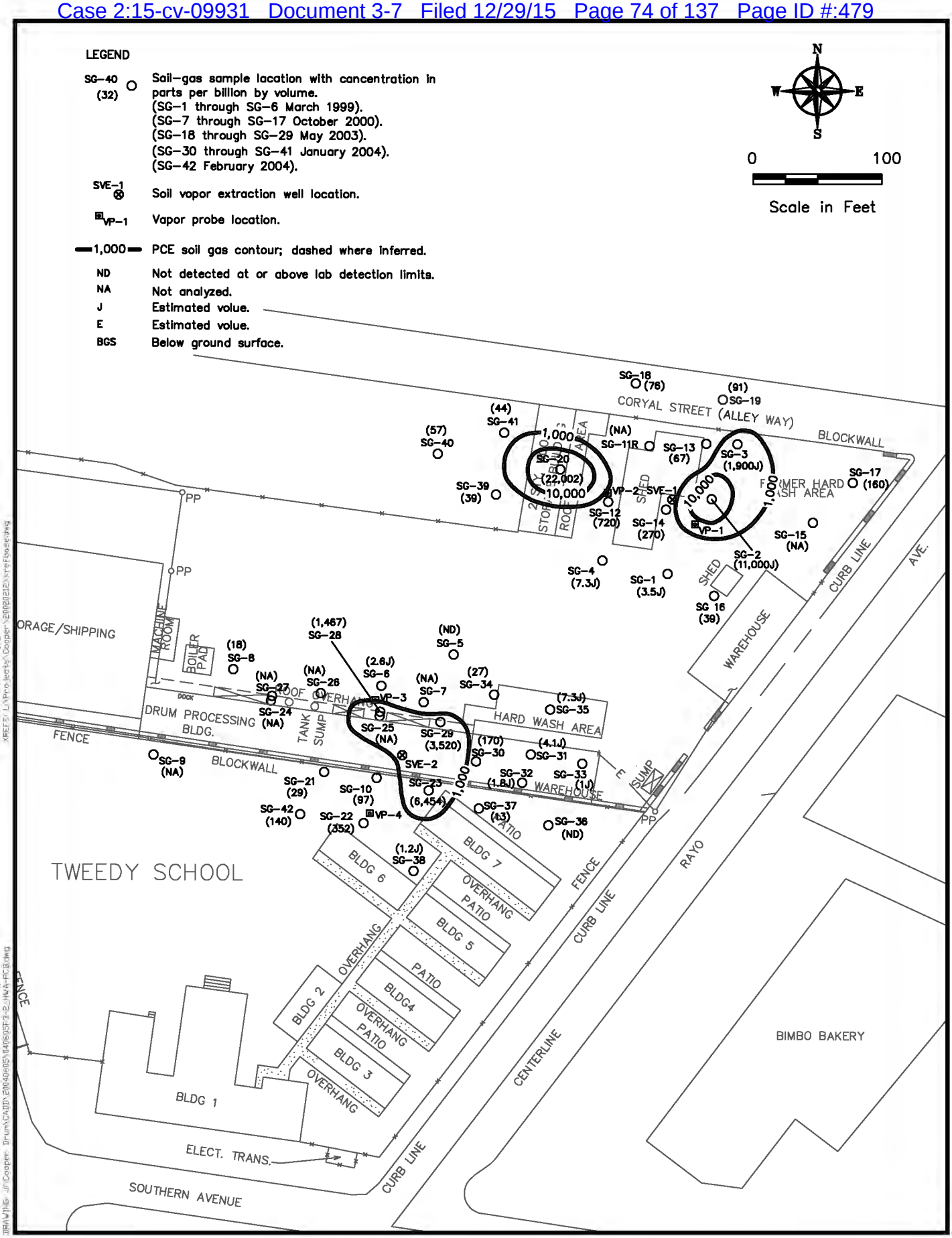

URS

PCE Soil Gas Contours at 30 Feet BGS

Figure 3-8

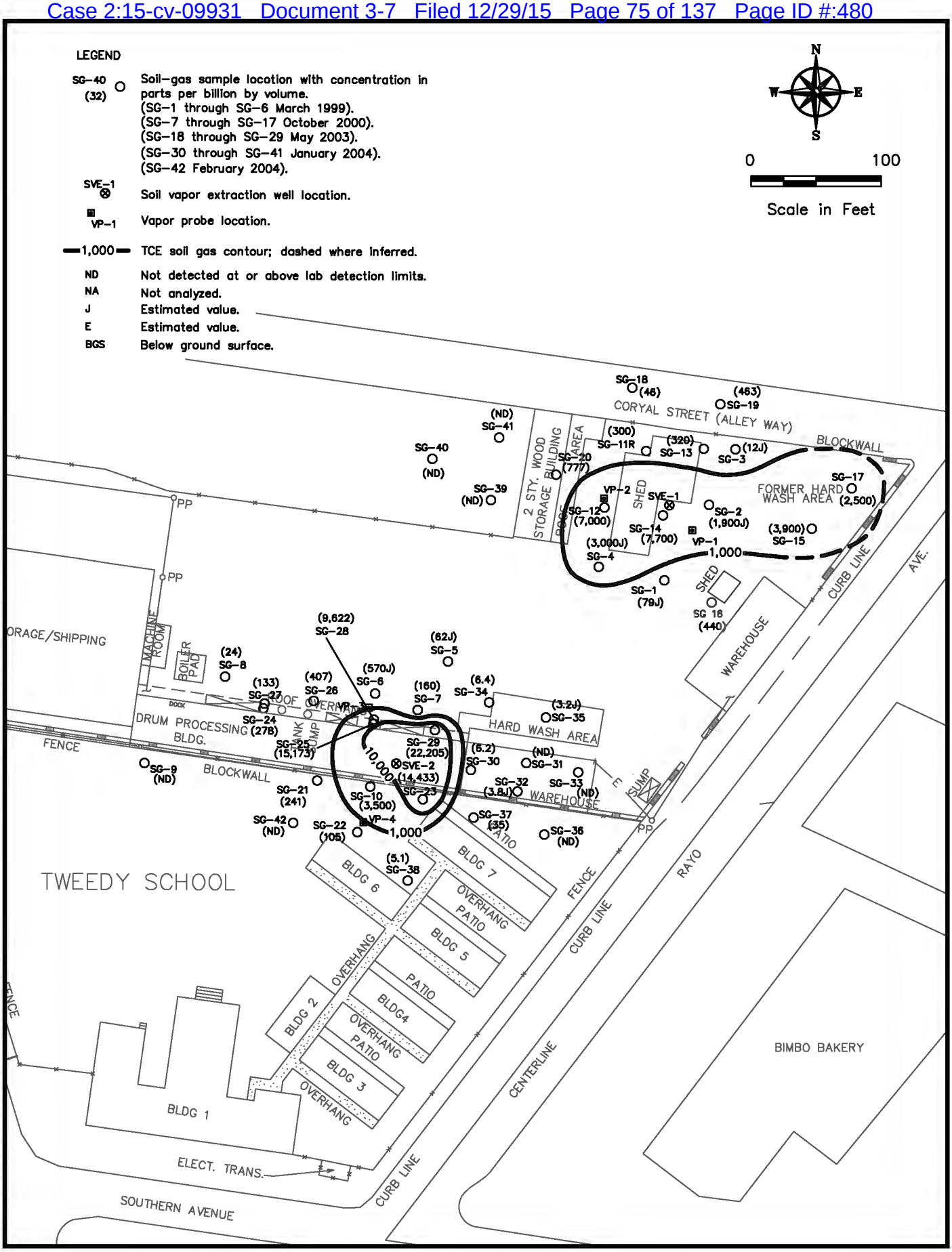

URS

TCE Soil Gas Contours at 10 Feet BGS

Figure 3-9

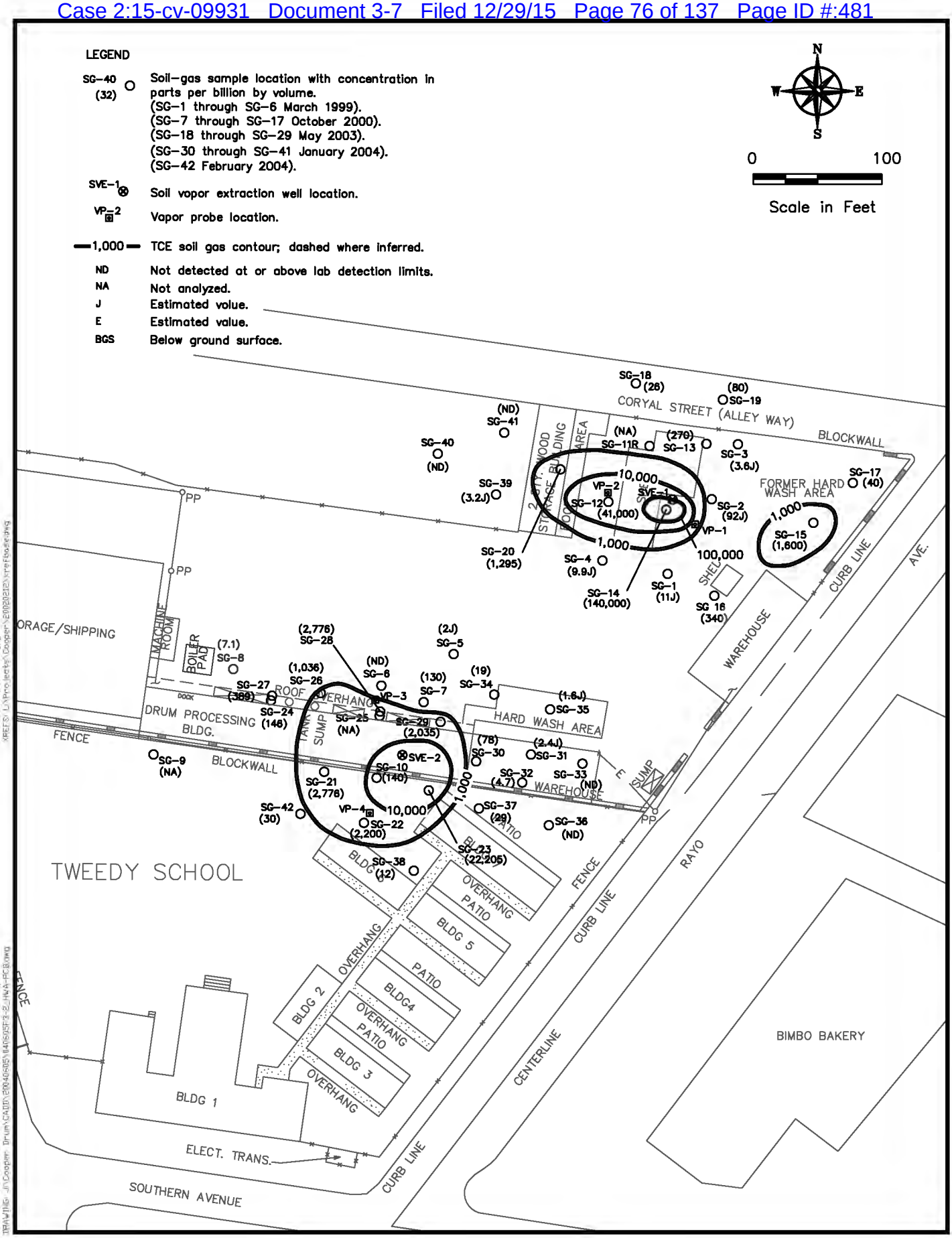

URS

TCE Soil Gas Contours at 20 Feet BGS

Figure 3-10

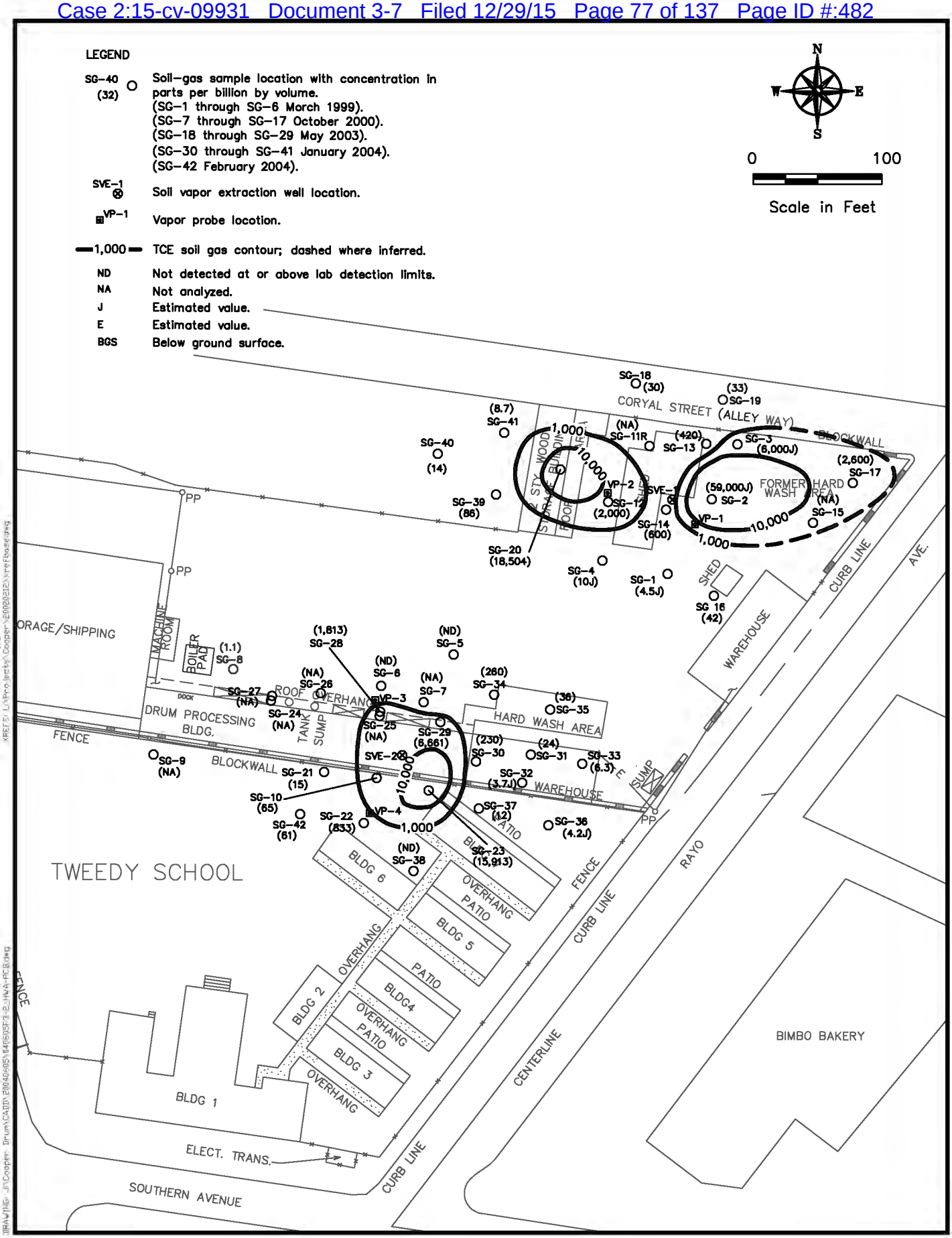

URS

TCE Soil Gas Contours at 30 Feet BGS

Figure 3-11

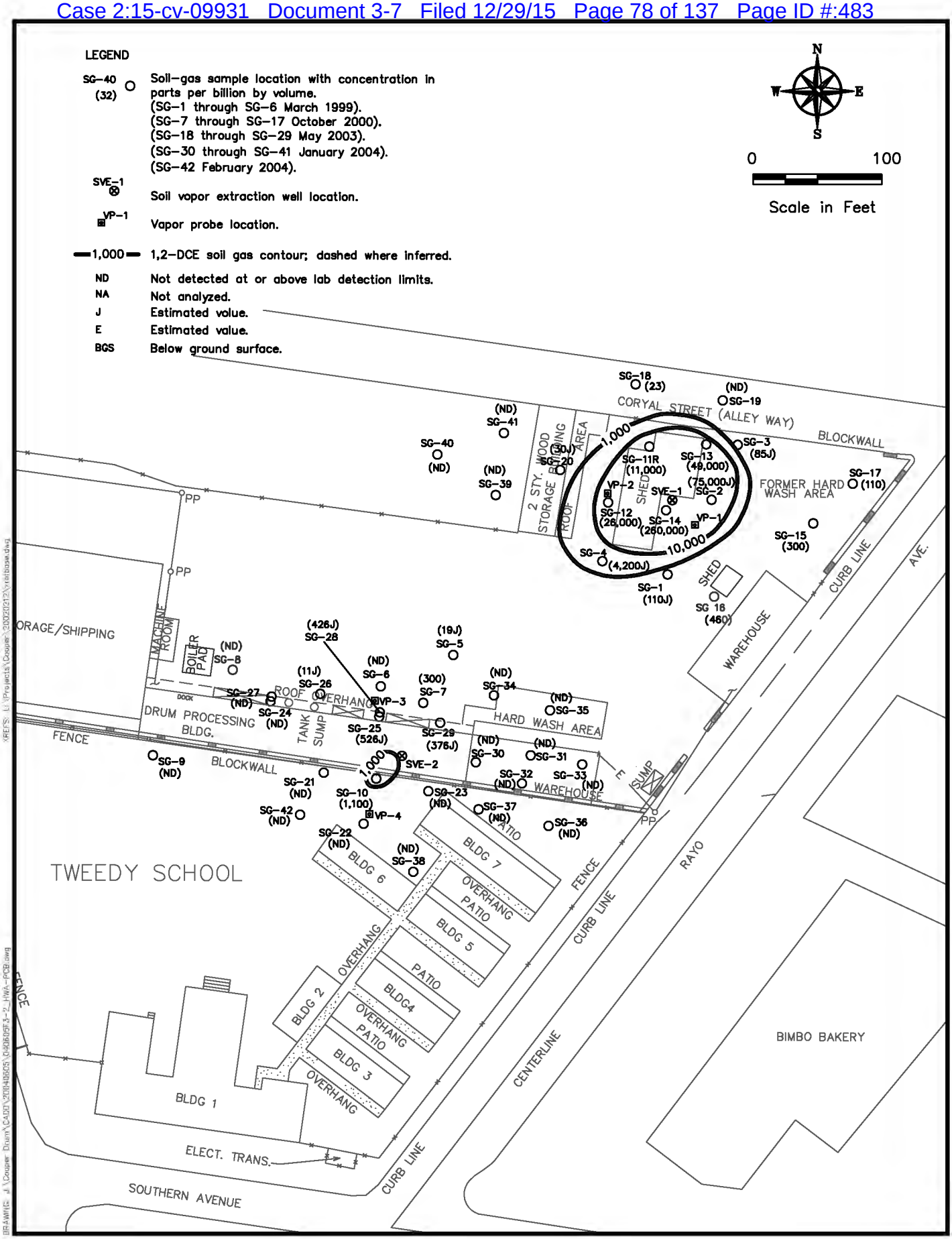

URS

1,2-DCE Soil Gas Contours at 10 Feet BGS

Figure 3-12

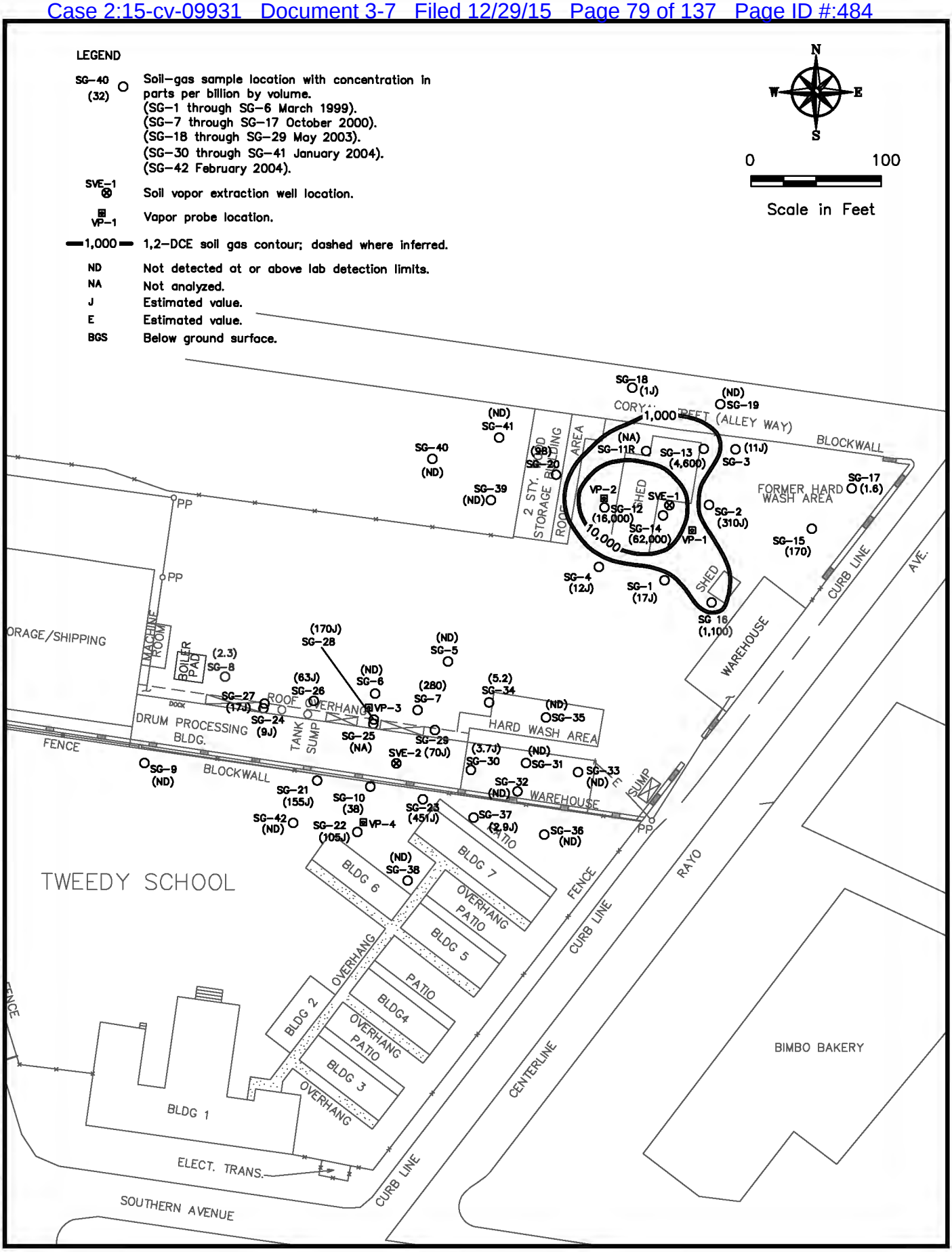

URS

1,2-DCE Soil Gas Contours at 20 Feet BGS

Figure 3-13

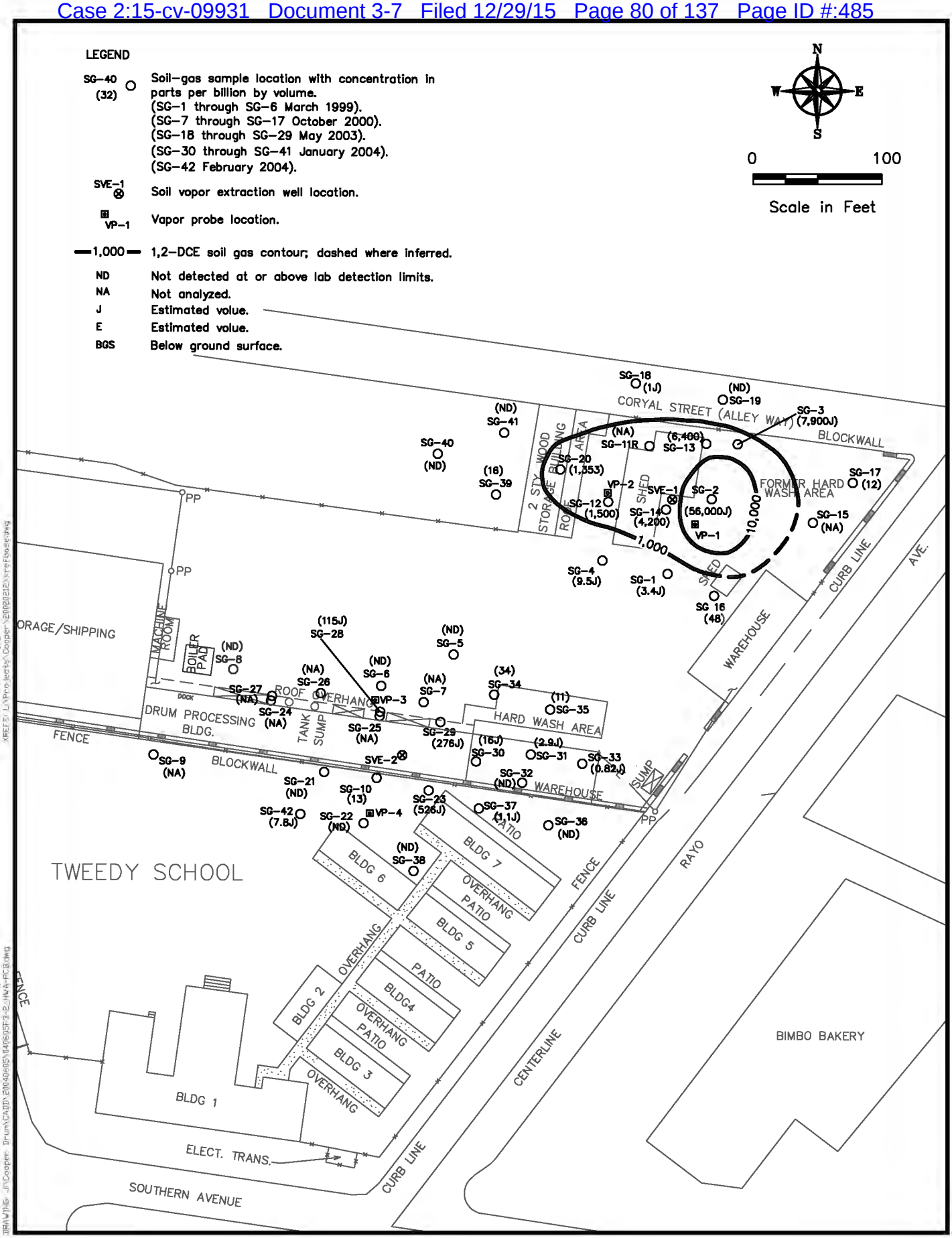

URS

1,2-DCE Soil Gas Contours at 30 Feet BGS

Figure 3-14

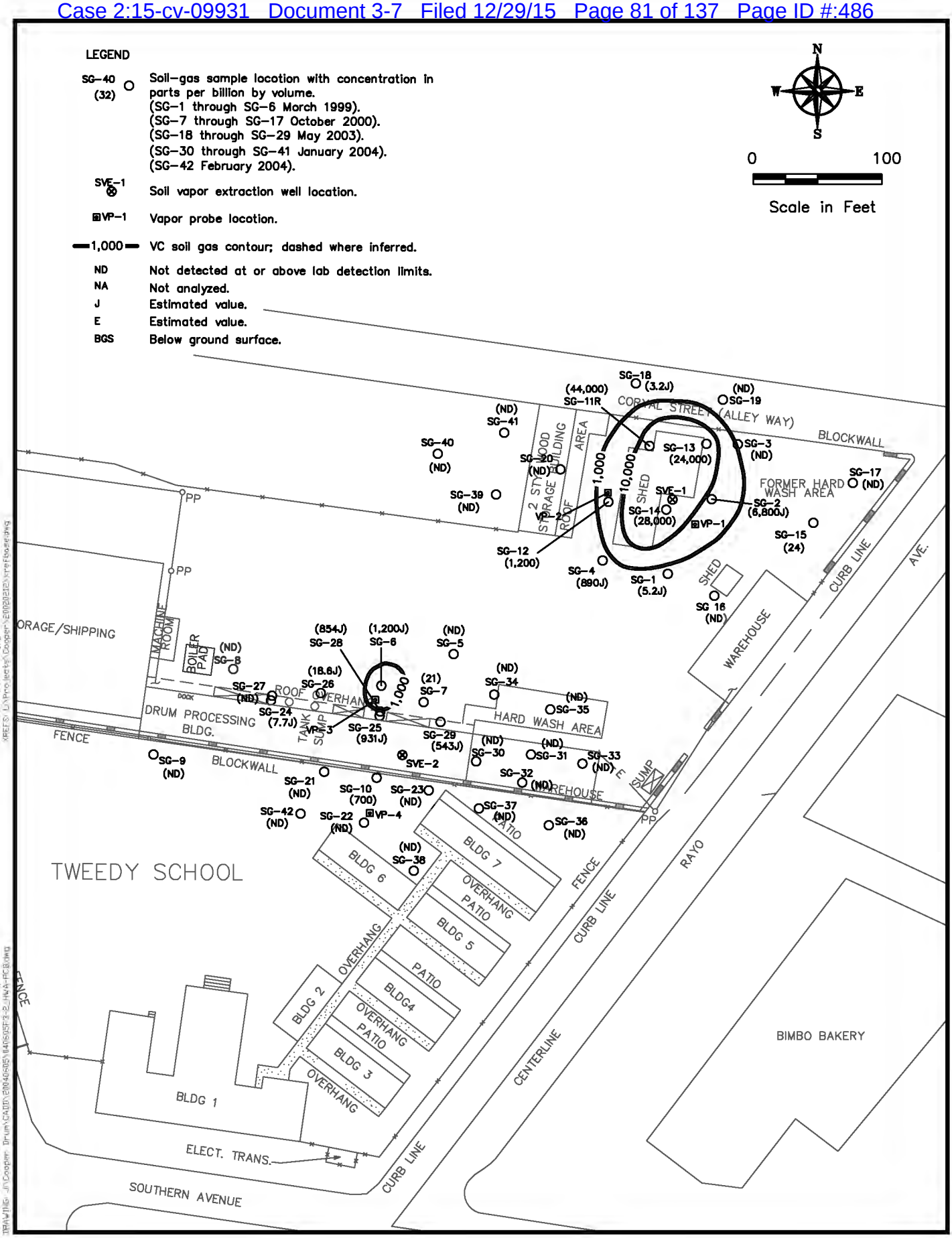

URS

Vinyl Chloride Soil Gas Contours at 10 Feet BGS

Figure 3-15

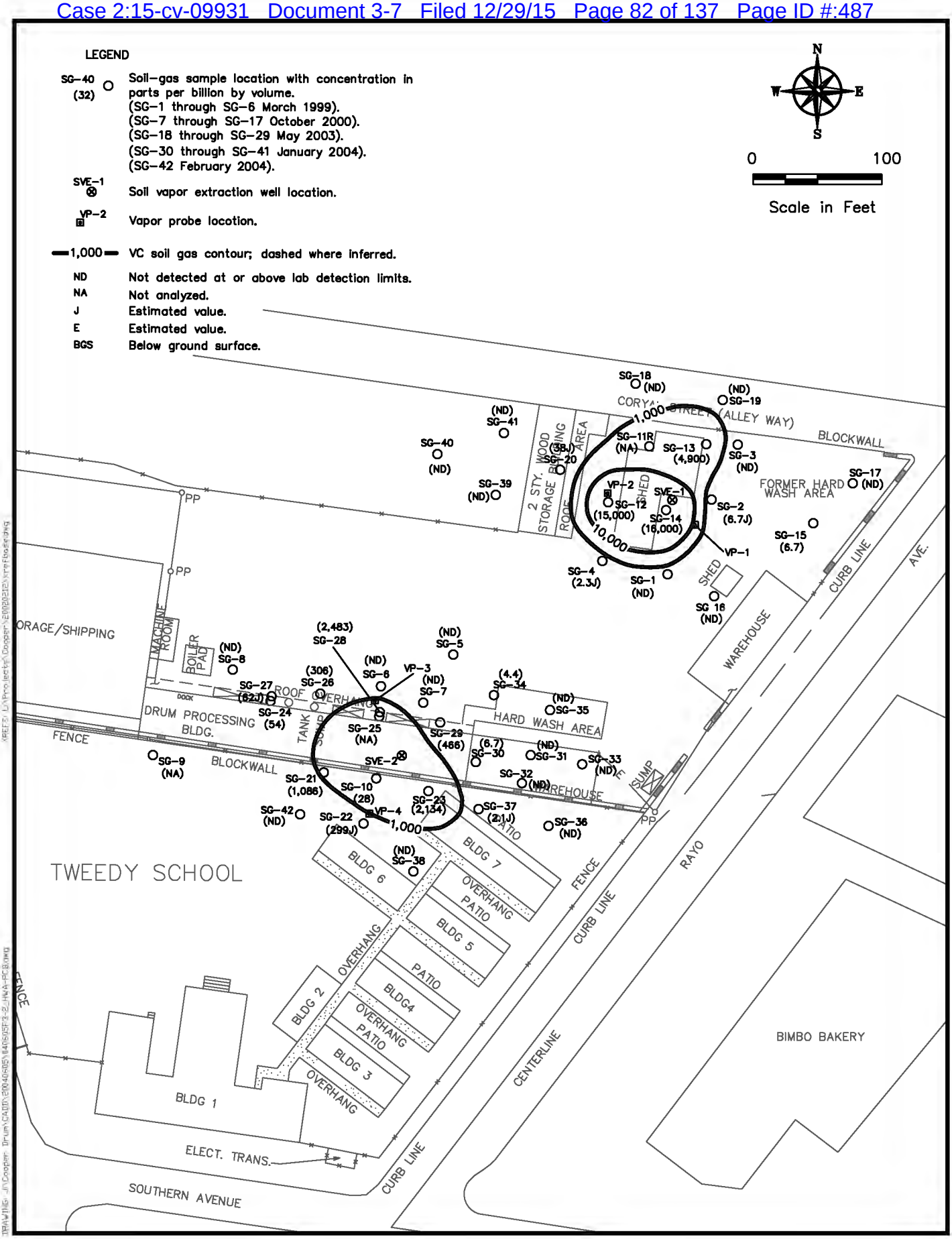

Vinyl Chloride Soil Gas Contours at 20 Feet BGS

URS

Figure 3-16

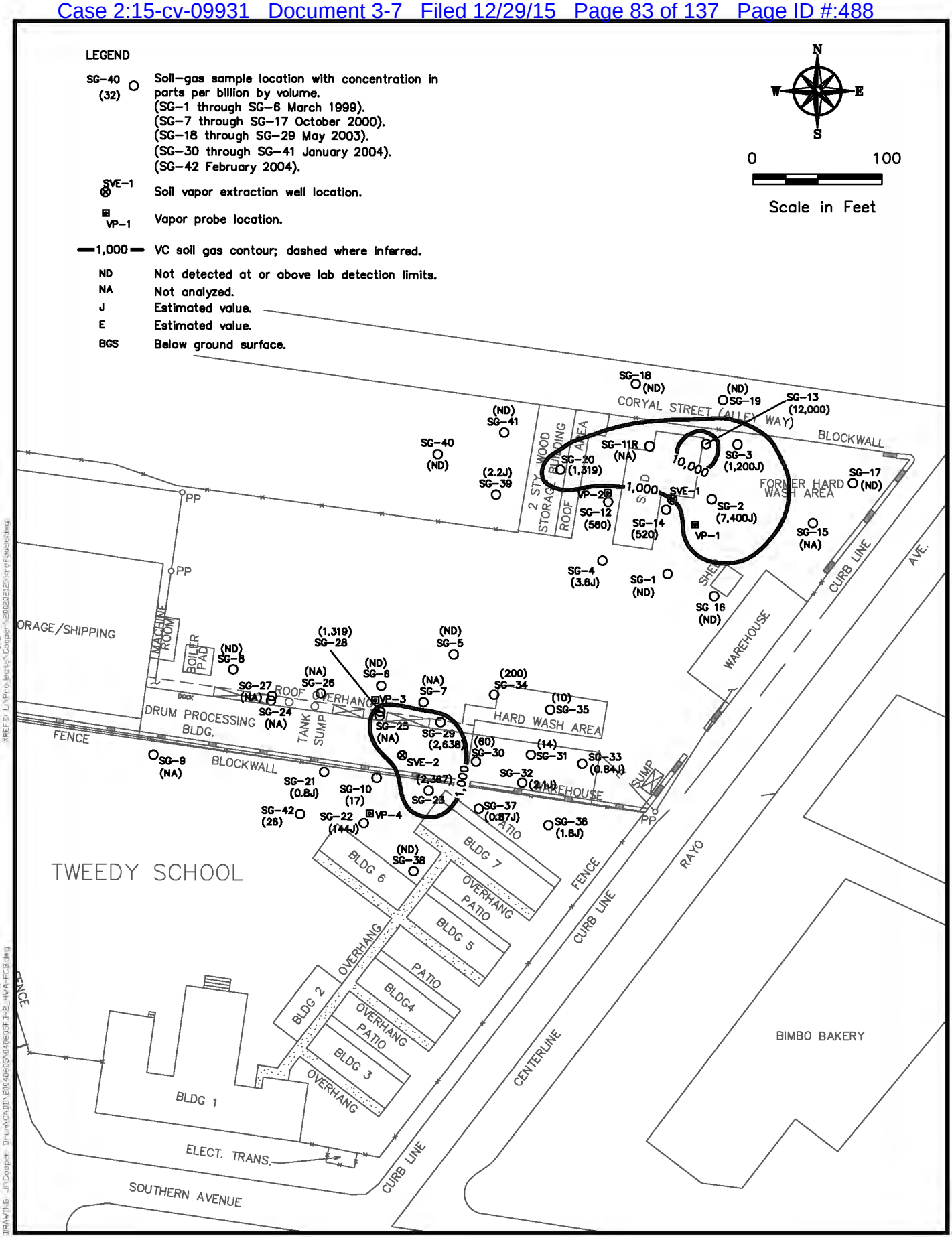

URS

Vinyl Chloride Soil Gas Contours at 30 Feet BGS

Figure 3-17

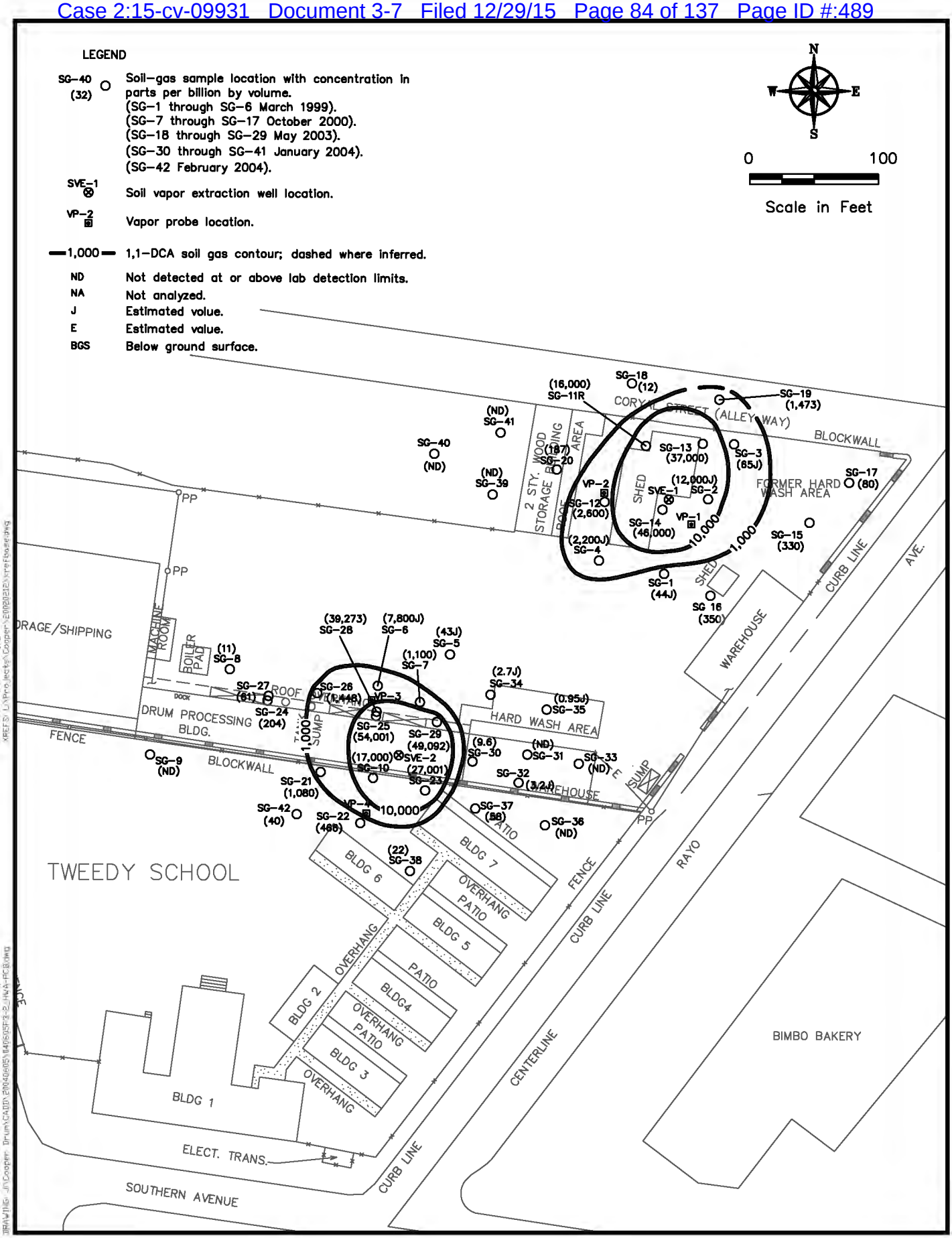

URS

1,1-DCA Soil Gas Contours at 10 Feet BGS

Figure 3-18

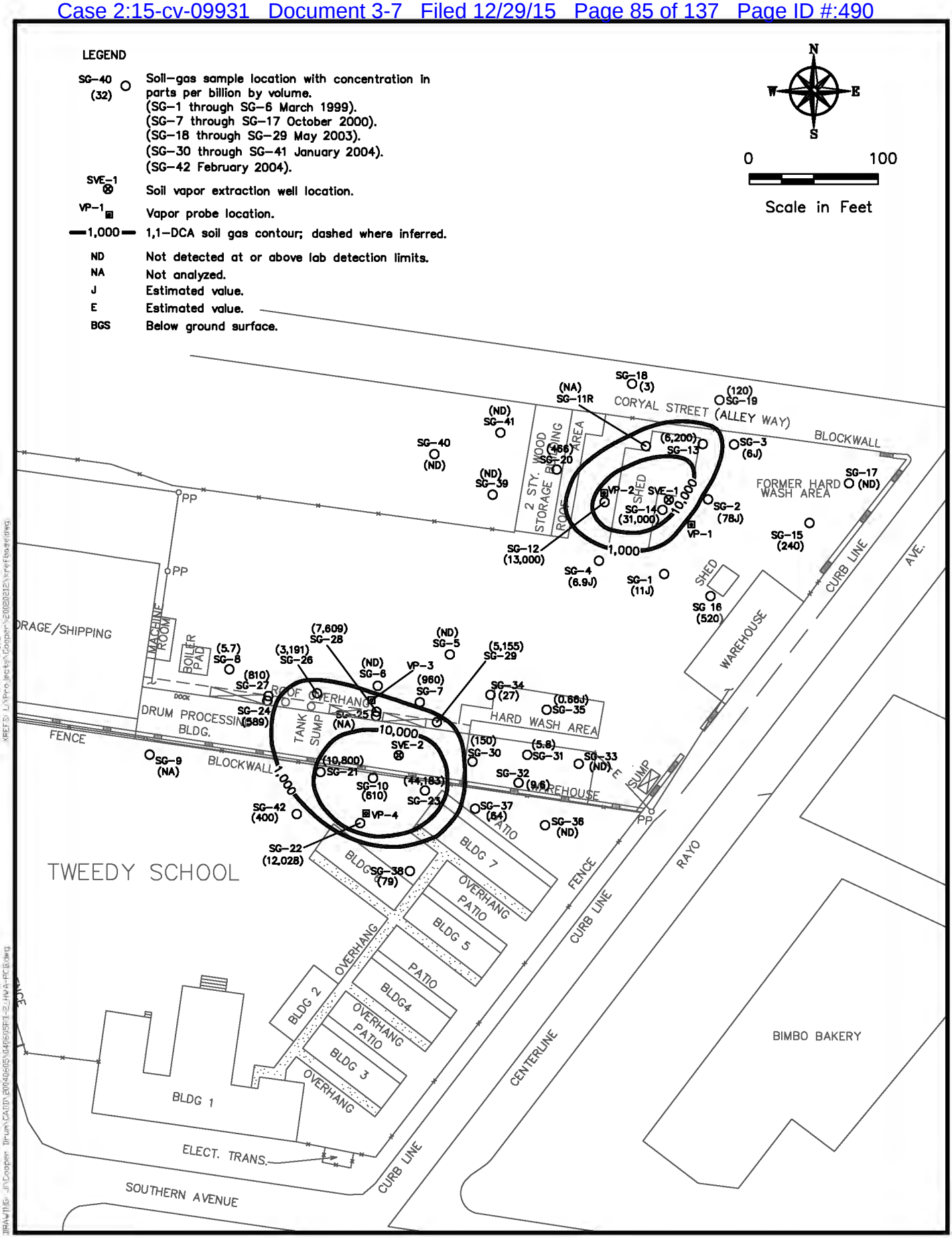

URS

1,1-DCA Soil Gas Contours at 20 Feet BGS

Figure 3-19

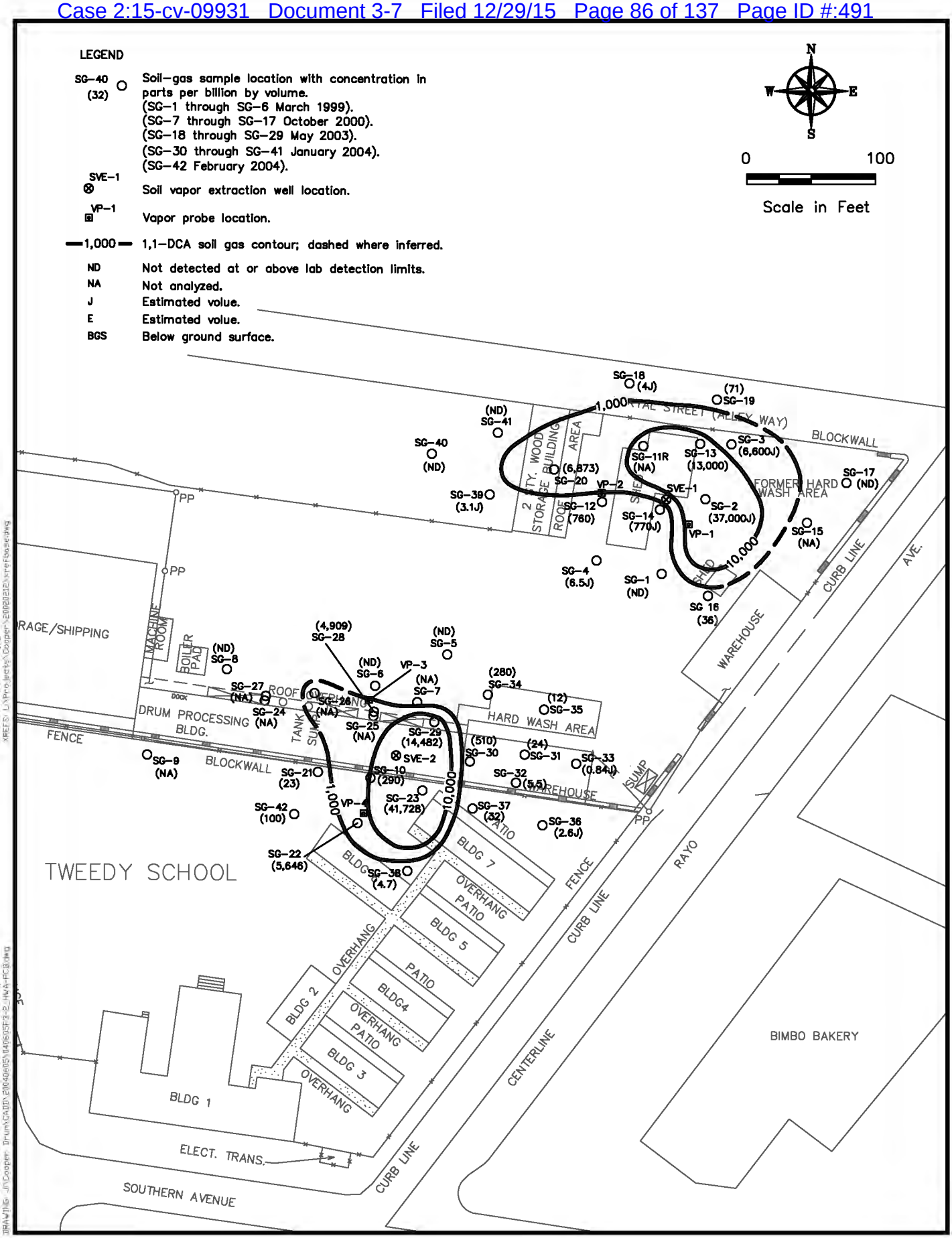

URS

1,1-DCA Soil Gas Contours at 30 Feet BGS

Figure 3-20

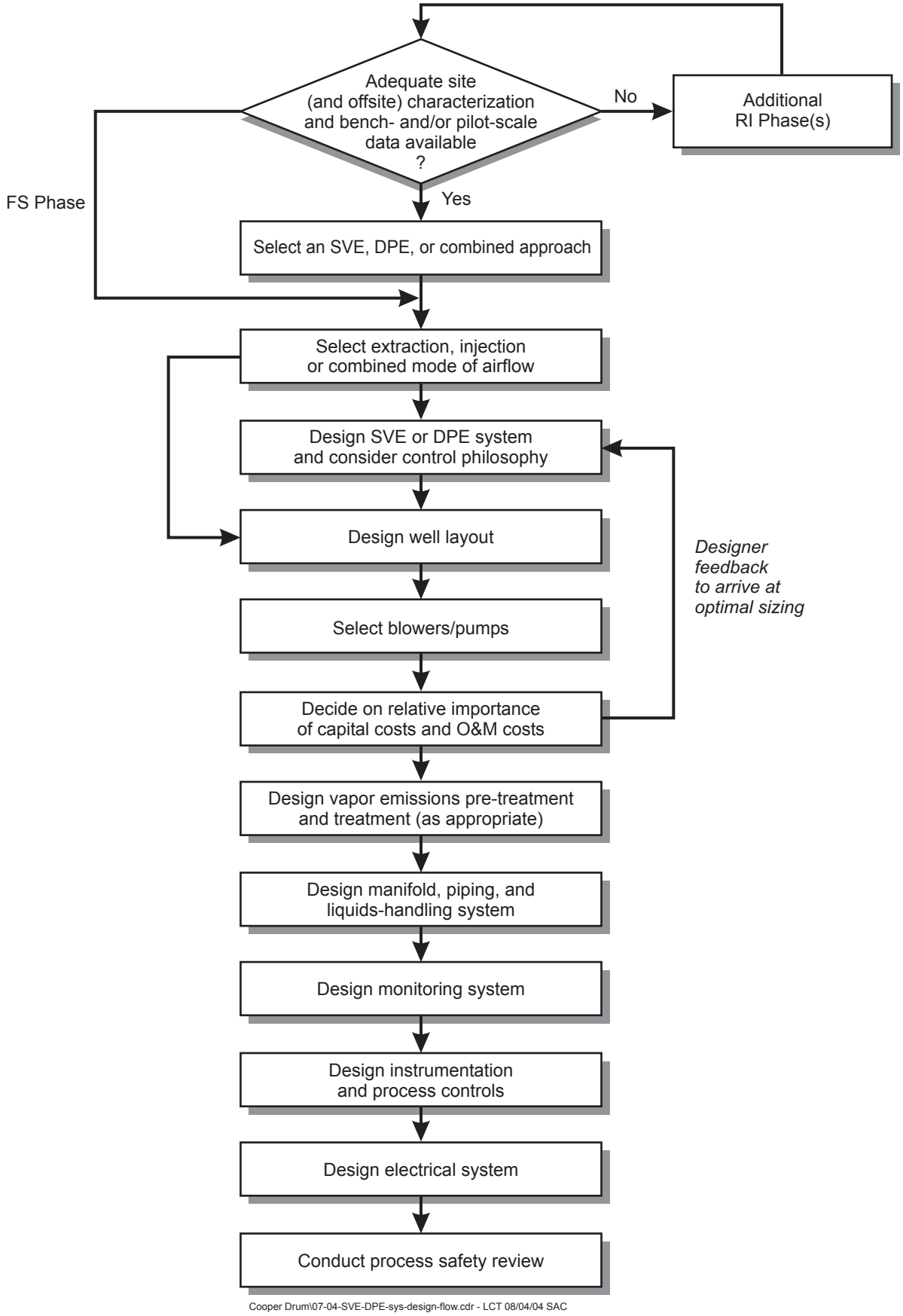

Figure 3-21. Task Flow for SVE/DPE System Design

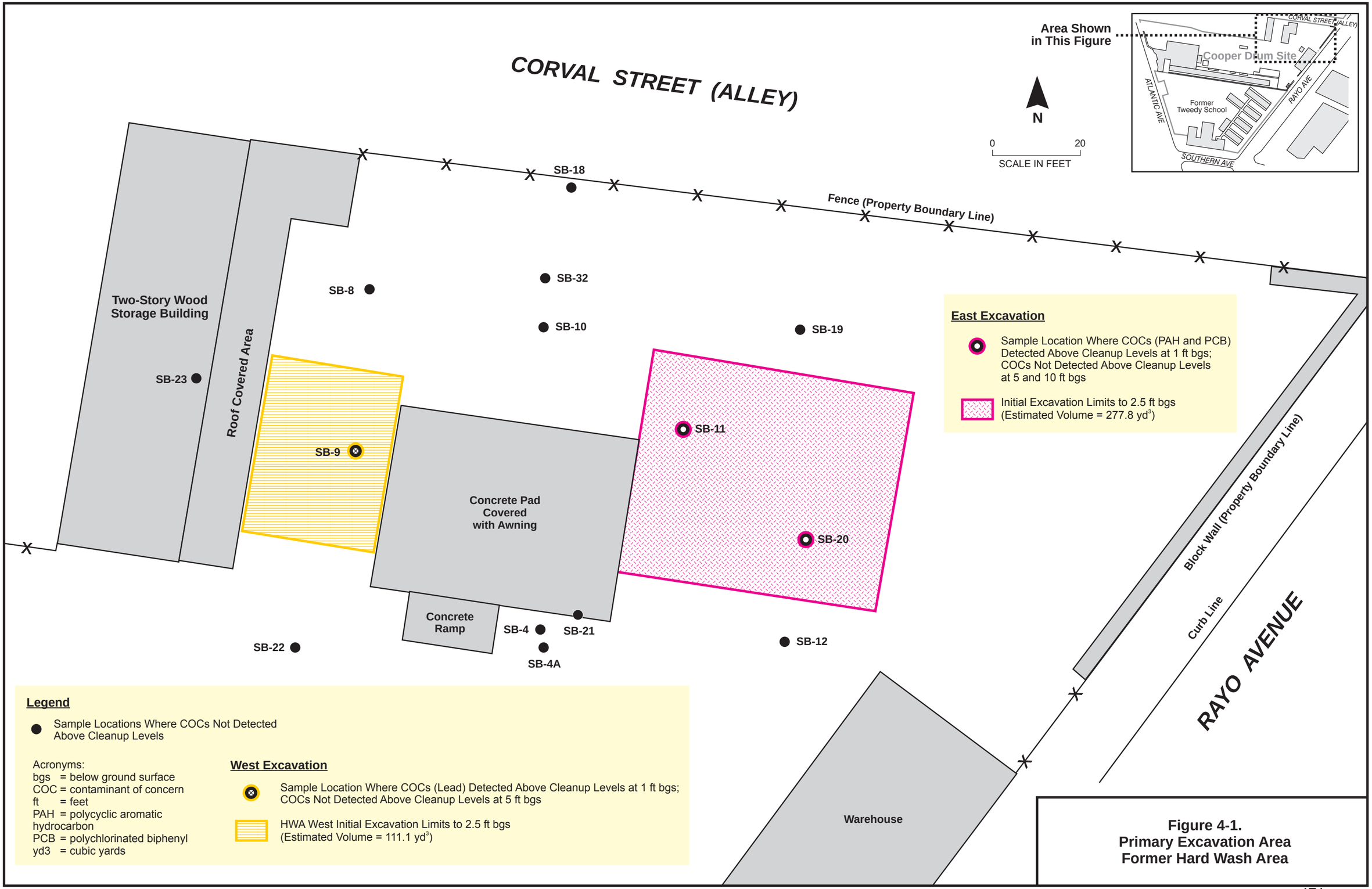

Figure 4-1.
Primary Excavation Area
Former Hard Wash Area

07-04-Cooper-Drum-HWA-site-plan.cdr - LCT 11.27.06 SAC

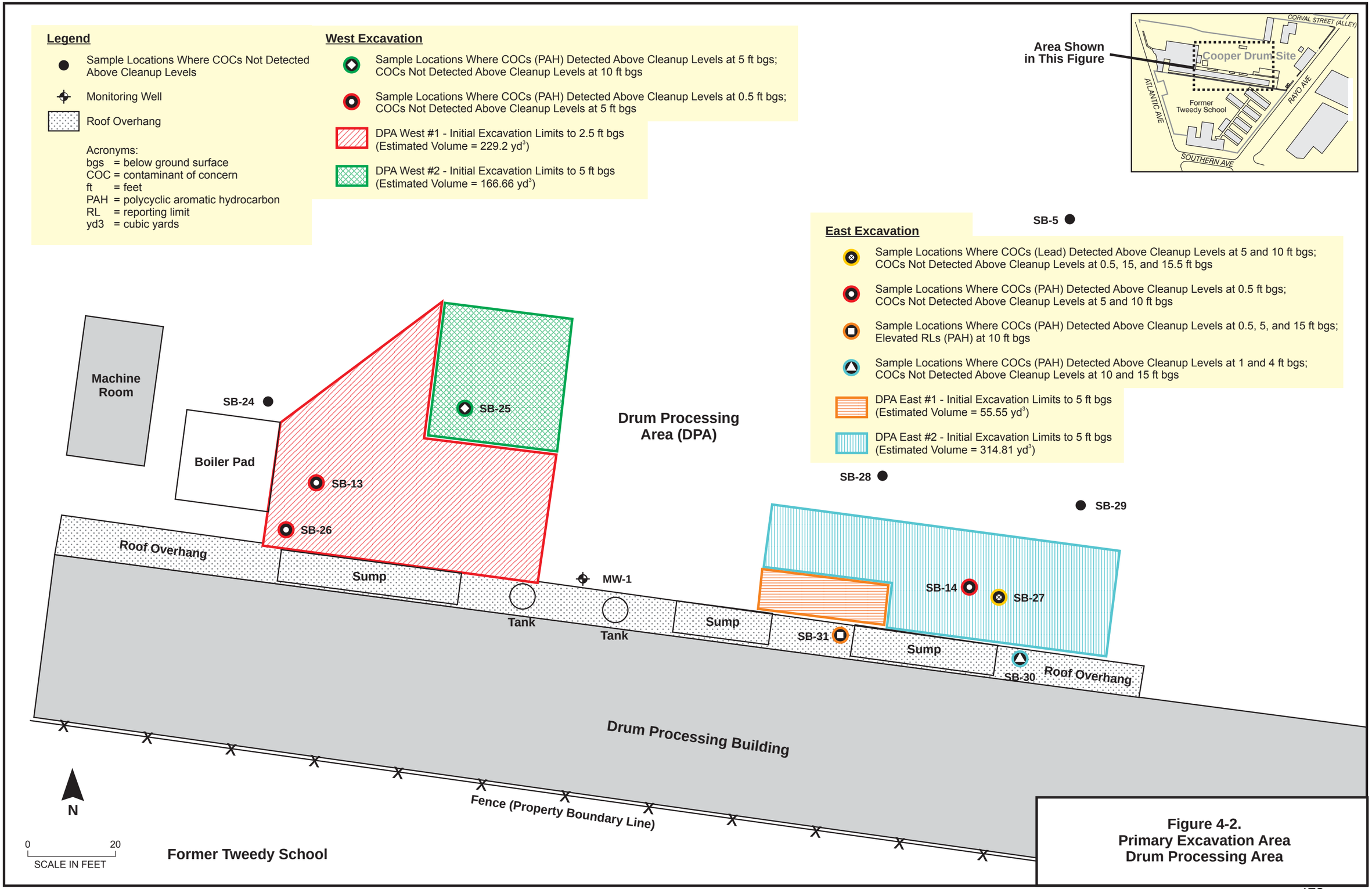

Figure 4-2.
Primary Excavation Area
Drum Processing Area

10-06-Cooper-Drum-DPA-site-plan.cdr - LCT 11.27.06 SAC

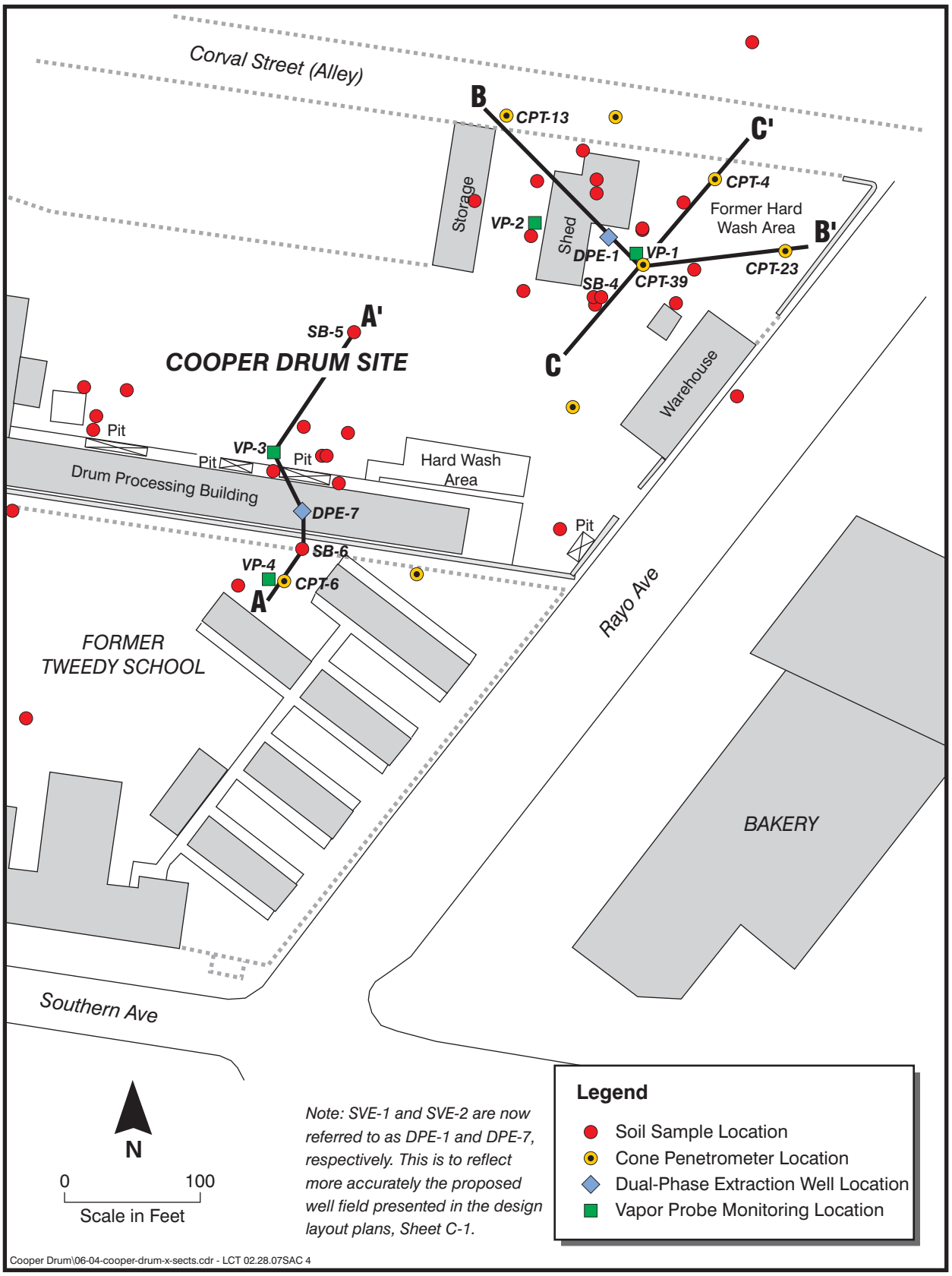

Figure 5-1. Location of Cross-Sections

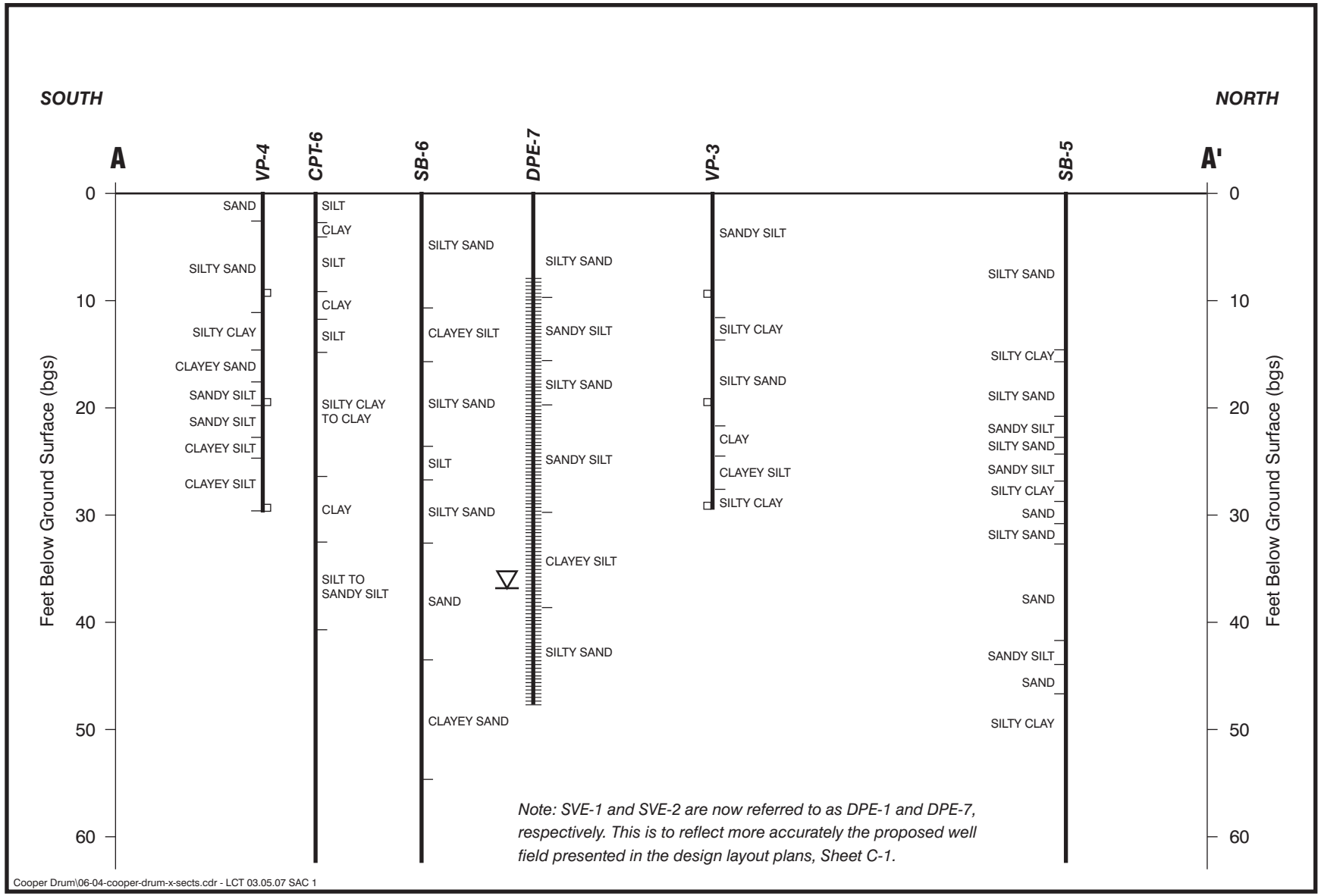

Figure 5-2. A-A' Cross-Section, Drum Processing Area

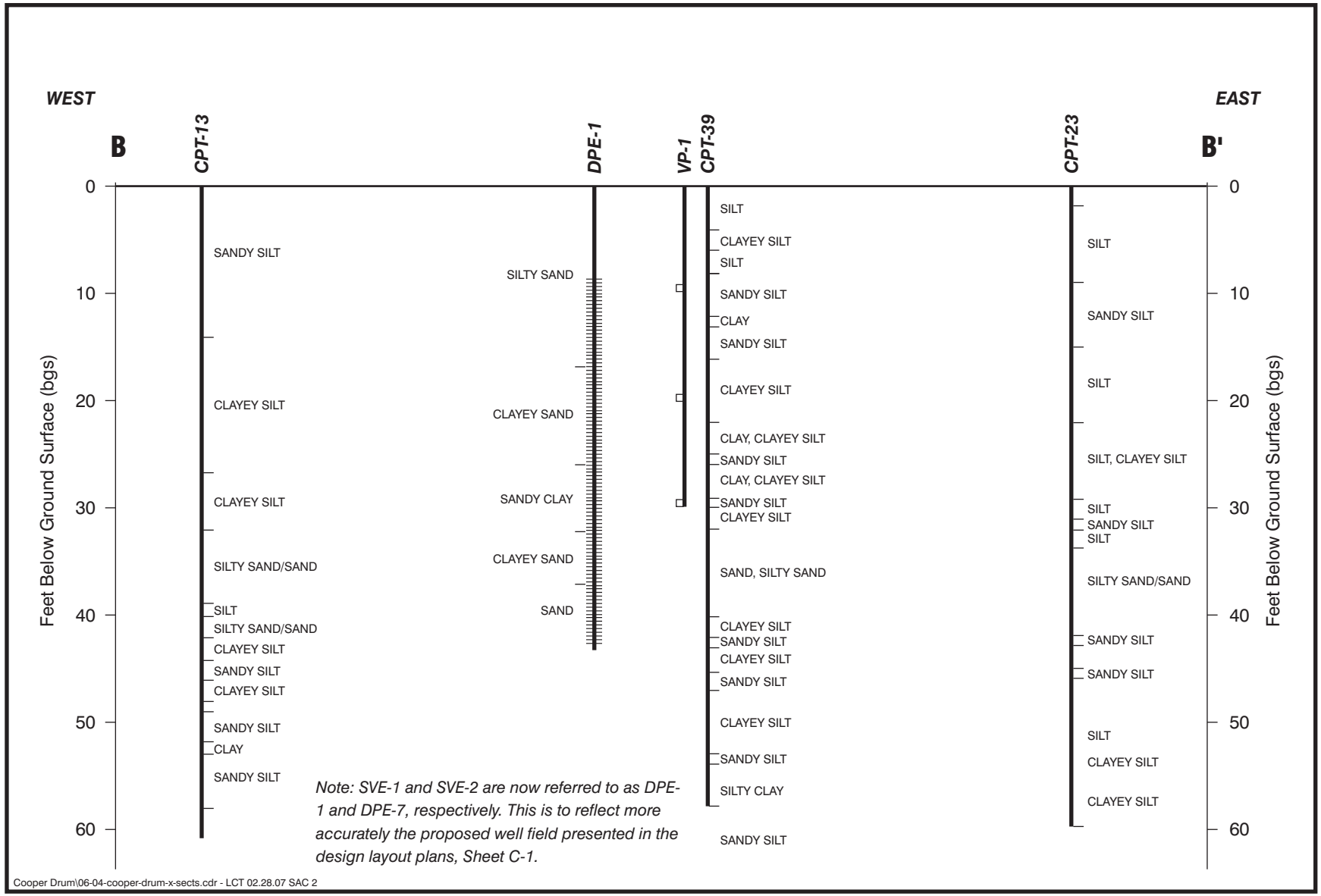

Figure 5-3. B-B' Cross-Section, Former Hard-Wash Area

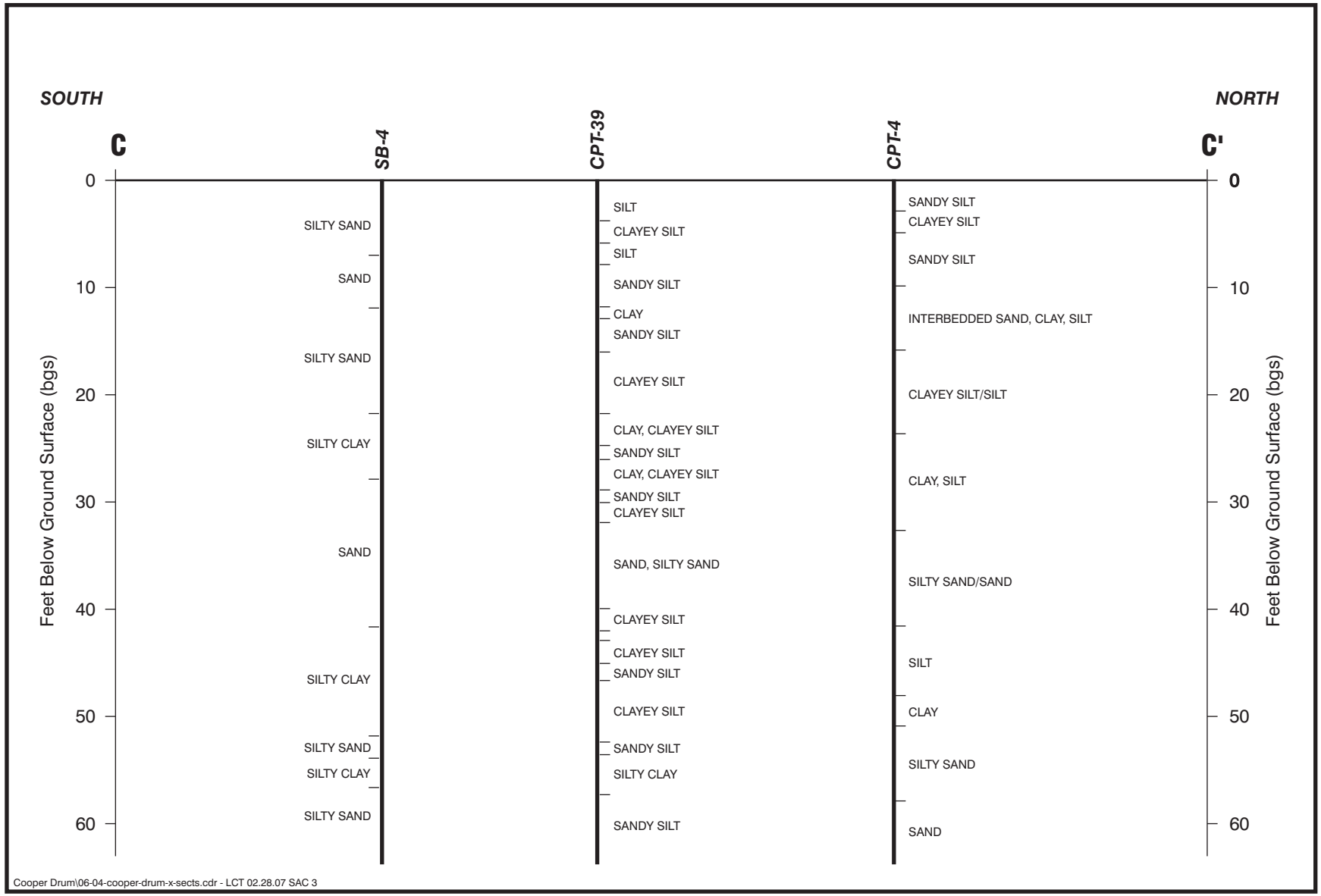

Figure 5-4. C-C' Cross-Section, Former Hard-Wash Area

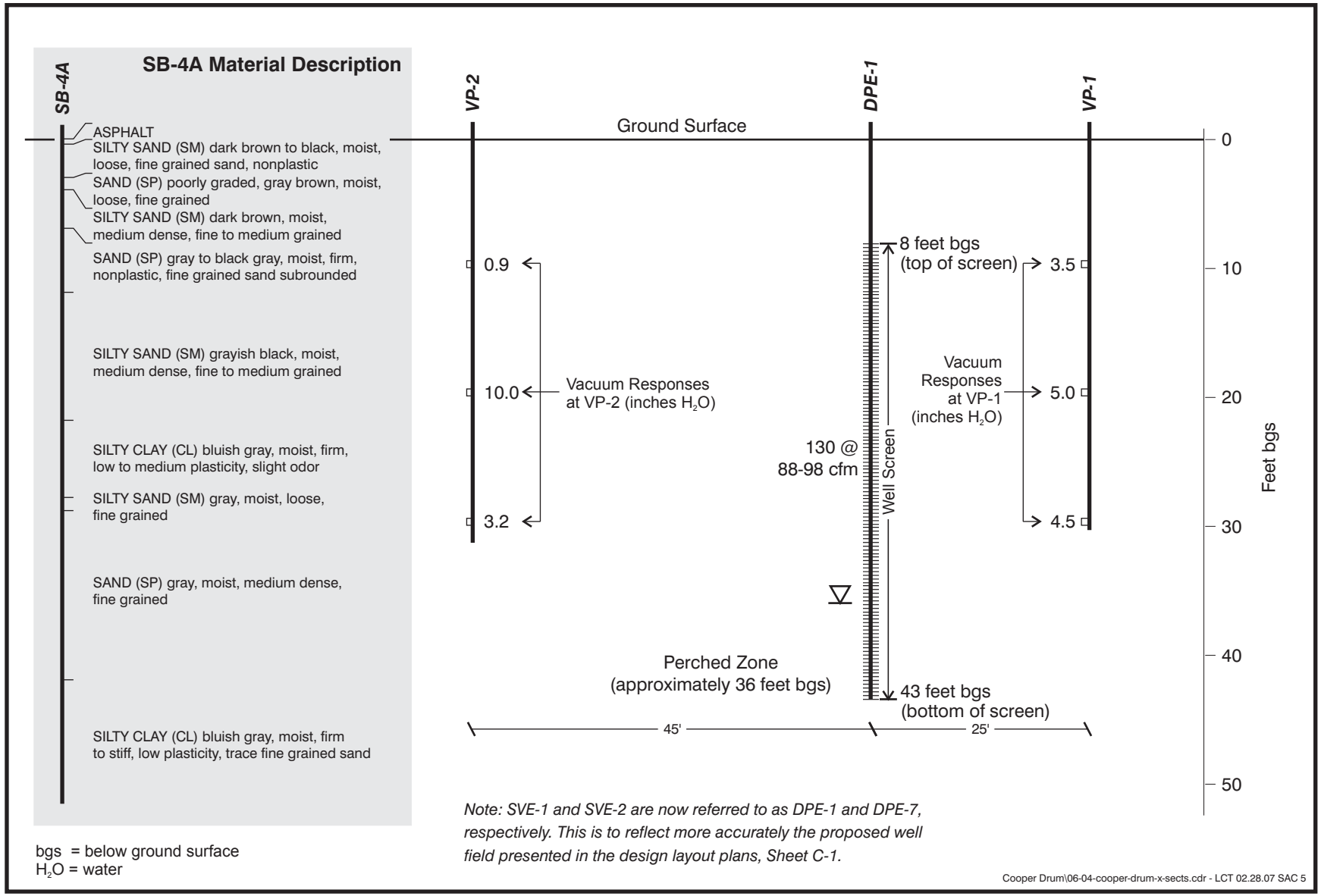

Figure 5-5. Soil Vapor Extraction Test (Hard-Wash Area) Vacuum Response at End of Test (Inches H_20)

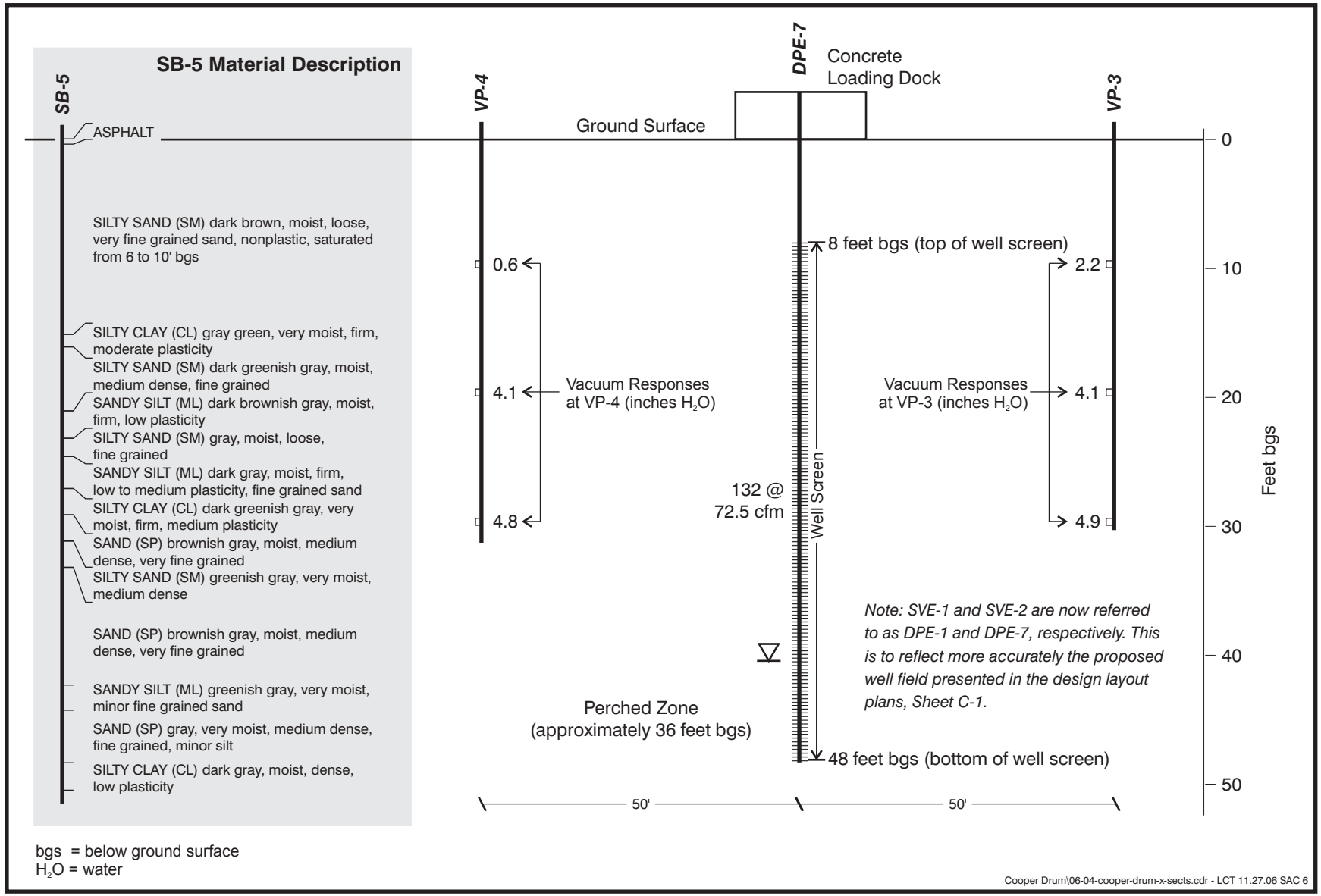

Figure 5-6. Soil Vapor Extraction Test (Drum Processing Area) Vacuum Response at End of Test (Inches H_20)

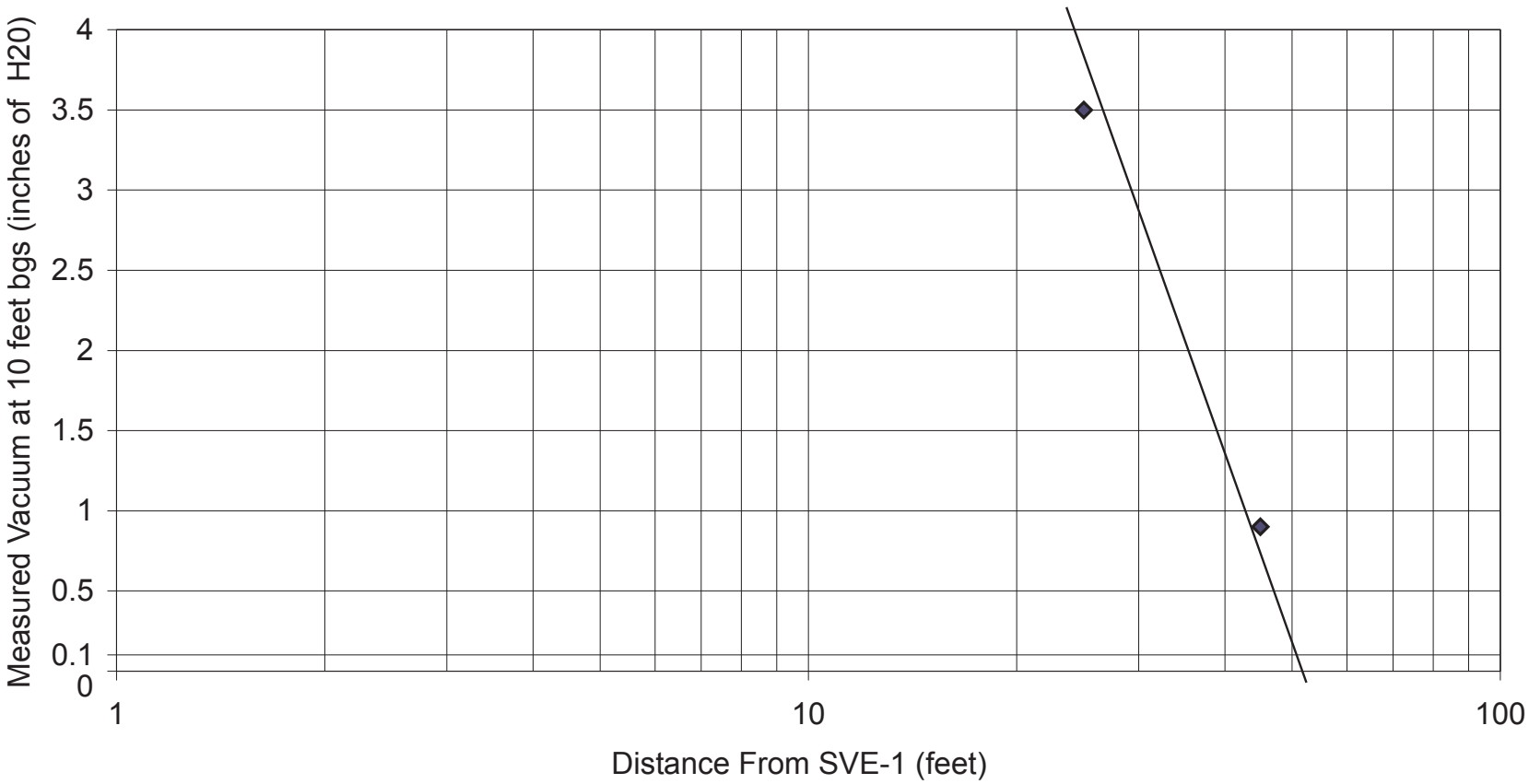

Effective SVE radius of influence corresponding to 0.1

Cooper Drum\08-04-Cooper-Drum-charts.cdr - LCT 11.27.06 SAC 1

Figure 5-7. Determining Radius of Influence for SVE-1 (at 10 feet bgs)

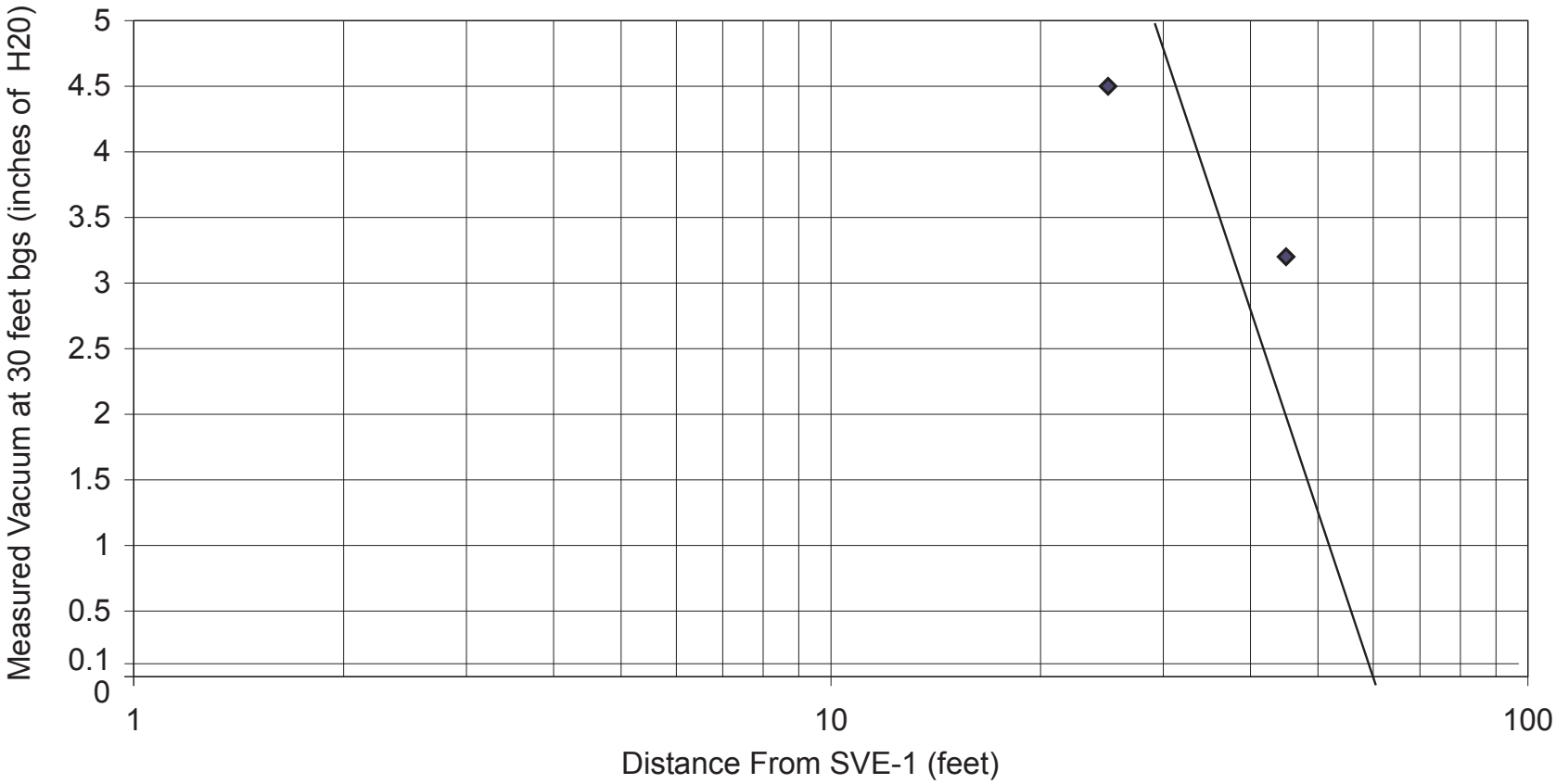

Effective radius of influence corresponding to 0.1

Cooper Drum\08-04-Cooper-Drum-charts.cdr - LCT 11.27.06 SAC 2

Figure 5-8. Determining Radius of Influence for SVE-1 (at 30 feet bgs)

NOTE:

SVE–1 AND SVE–2 ARE NOW REFERRED TO AS DPE–1 & DPE–7, RESPECTIVELY THIS IS TO MORE ACCURATELY REFLECT THE PROPOSED WELL FIELD LAYOUT PRESENTED IN THE DESIGN PLANS, SHEET C–1.

LEGEND:

- ⊕ – PROPOSED DPE WELL
- **DPE** – DUAL–PHASE EXTRACTION
- **FT** – FEET
- **ROI** – RADIUS OF INFLUENCE
- **PPBV** – PARTS PER BILLION BY VOLUME
- **BGS** – BELOW GROUND SURFACE
- * – FORMERLY KNOWN AS SVE 1
- **PCE** – TETRACHLOROETHENE
- **TCE** – TRICHLOROETHENE
- **VC** – VINYL CHLORIDE
- **1,2–DCE** – 1,2–DICHLOROETHENE
- **1,1–DCA** – 1,1–DICHLOROETHANE

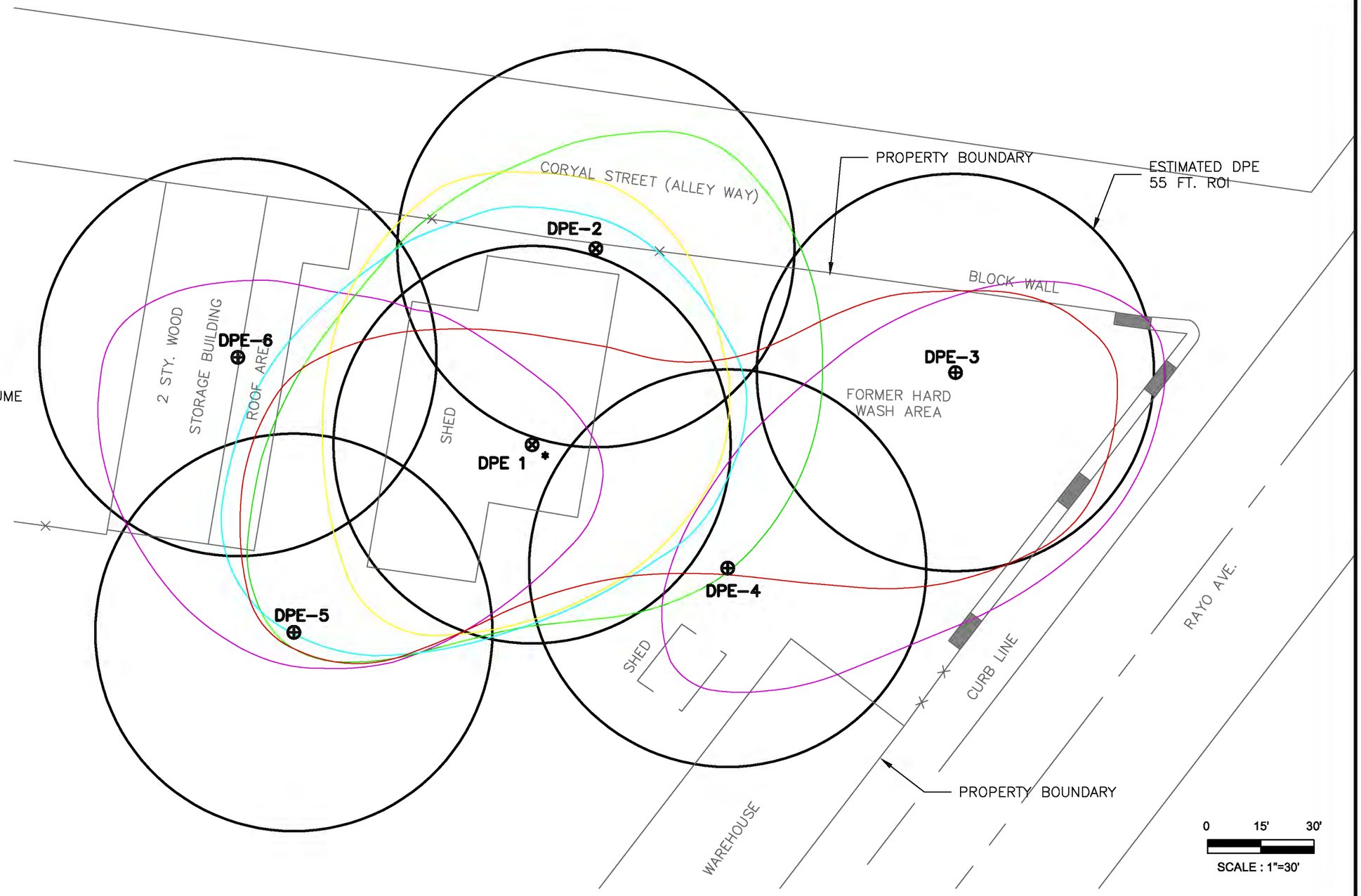

1,000 ppbv isopleths:

- PCE
- TCE
- VC
- 1,2-DCE
- 1,1-DCA

URS

Hard-Wash Area
1,000 ppbv VOCs at 10 Feet BGS

Figure 5-9

NOTE:

SVE–1 AND SVE–2 ARE NOW REFERRED TO AS DPE–1 & DPE–7, RESPECTIVELY THIS IS TO MORE ACCURATELY REFLECT THE PROPOSED WELL FIELD LAYOUT PRESENTED IN THE DESIGN PLANS, SHEET C–1.

LEGEND:

- ⊕ – PROPOSED DPE WELL
- DPE – DUAL–PHASE EXTRACTION
- FT – FEET
- ROI – RADIUS OF INFLUENCE
- PPBV – PARTS PER BILLION BY VOLUME
- BGS – BELOW GROUND SURFACE
- * – FORMERLY KNOWN AS SVE 1
- PCE – TETRACHLOROETHENE
- TCE – TRICHLOROETHENE
- VC – VINYL CHLORIDE
- 1,2–DCE – 1,2–DICHLOROETHENE
- 1,1–DCA – 1,1–DICHLOROETHANE

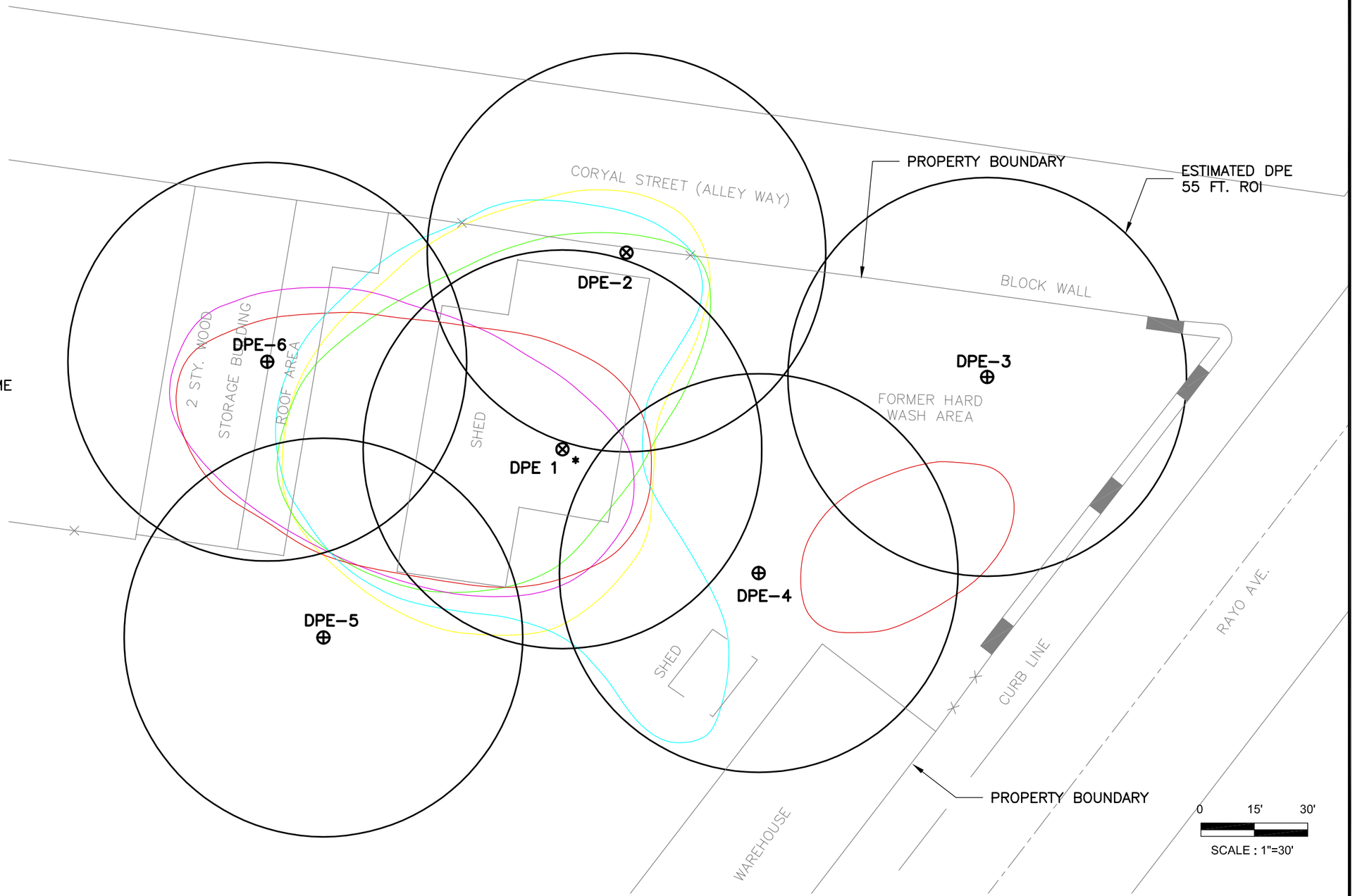

1,000 ppbv isopleths:

- PCE
- TCE
- VC
- 1,2-DCE
- 1,1-DCA

IMAGES: cooper drum.jpg
XREFS: J:\Cooper Drum\CADD\20040605\xref_base.dwg

PLOT BY: RTAYLOR – Sep 06, 2007 – 9:43:19am
DRAWING: C:\Documents and Settings\rtaylor\Desktop\040605FOX_20ft.dwg

URS

Hard-Wash Area
1,000 ppbv VOCs at 20 Feet BGS

Figure 5-10

NOTE:

SVE–1 AND SVE–2 ARE NOW REFERRED TO AS DPE–1 & DPE–7, RESPECTIVELY THIS IS TO MORE ACCURATELY REFLECT THE PROPOSED WELL FIELD LAYOUT PRESENTED IN THE DESIGN PLANS, SHEET C–1.

LEGEND:

- ⊕ – PROPOSED DPE WELL
- DPE – DUAL–PHASE EXTRACTION
- FT – FEET
- ROI – RADIUS OF INFLUENCE
- PPBV – PARTS PER BILLION BY VOLUME
- BGS – BELOW GROUND SURFACE
- * – FORMERLY KNOWN AS SVE 1
- PCE – TETRACHLOROETHENE
- TCE – TRICHLOROETHENE
- VC – VINYL CHLORIDE
- 1,2–DCE – 1,2–DICHLOROETHENE
- 1,1–DCA – 1,1–DICHLOROETHANE

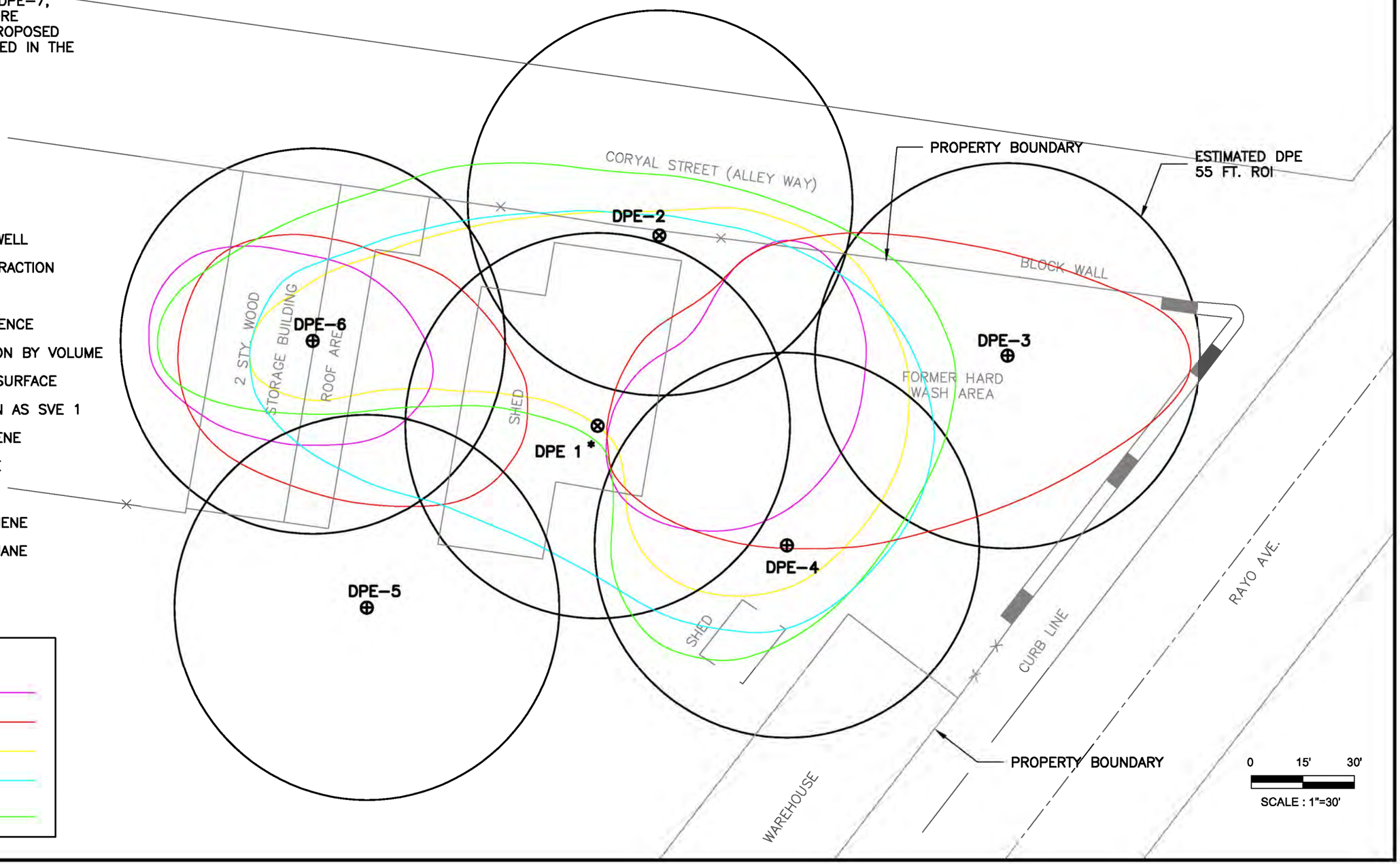

1,000 ppbv isopleths:

- PCE
- TCE
- VC
- 1,2-DCE
- 1,1-DCA

URS

Hard-Wash Area
1,000 ppbv VOCs at 30 Feet BGS

Figure 5-11

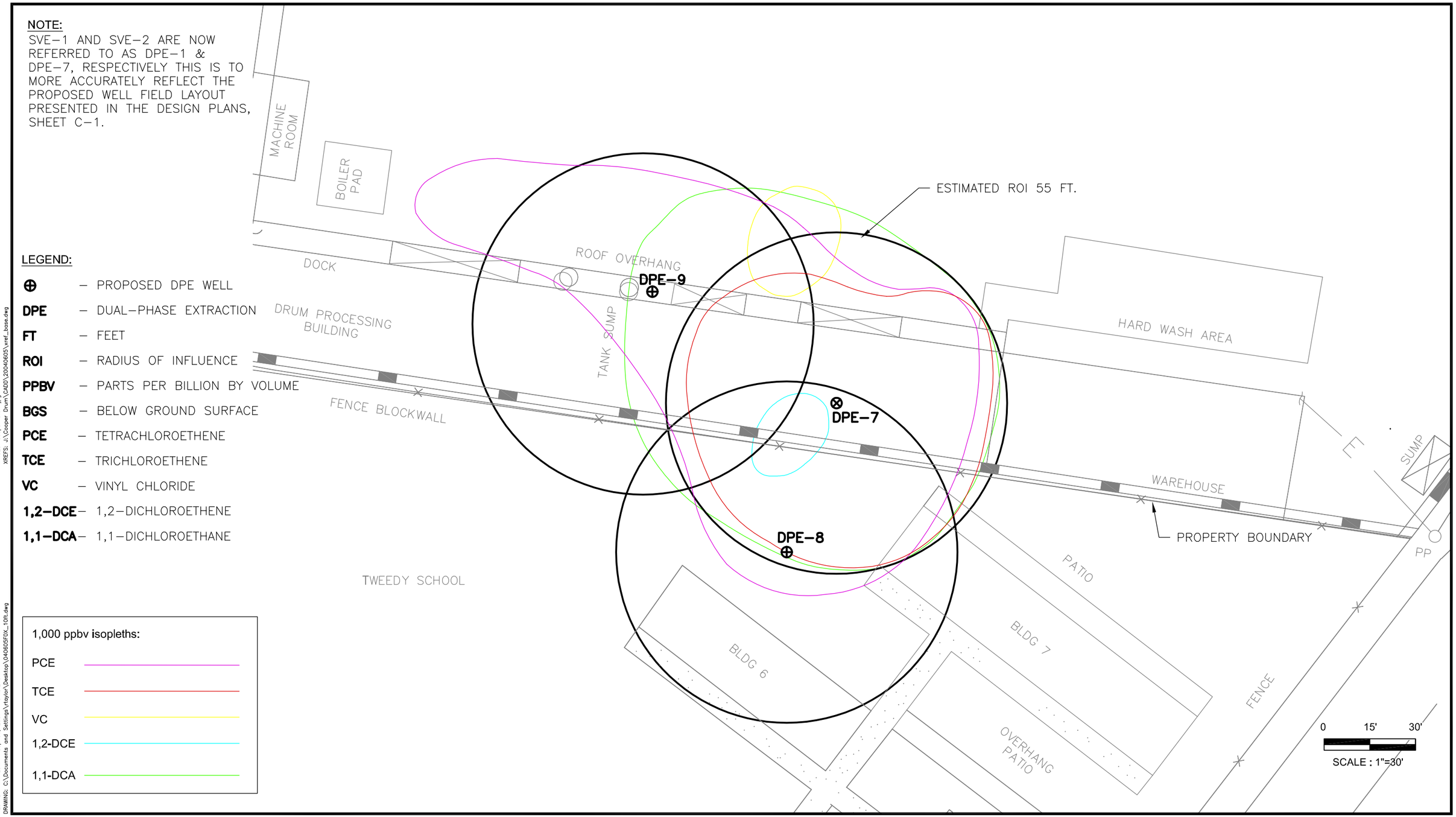

URS

Drum Processing Area
1,000 ppbv VOCs at 10 Feet BGS

Figure 5-12

NOTE:

SVE–1 AND SVE–2 ARE NOW REFERRED TO AS DPE–1 & DPE–7, RESPECTIVELY THIS IS TO MORE ACCURATELY REFLECT THE PROPOSED WELL FIELD LAYOUT PRESENTED IN THE DESIGN PLANS, SHEET C–1.

LEGEND:

- ⊕ – PROPOSED DPE WELL
- DPE – DUAL–PHASE EXTRACTION
- FT – FEET
- ROI – RADIUS OF INFLUENCE
- PPBV – PARTS PER BILLION BY VOLUME
- BGS – BELOW GROUND SURFACE
- PCE – TETRACHLOROETHENE
- TCE – TRICHLOROETHENE
- VC – VINYL CHLORIDE
- 1,2–DCE – 1,2–DICHLOROETHENE
- 1,1–DCA – 1,1–DICHLOROETHANE

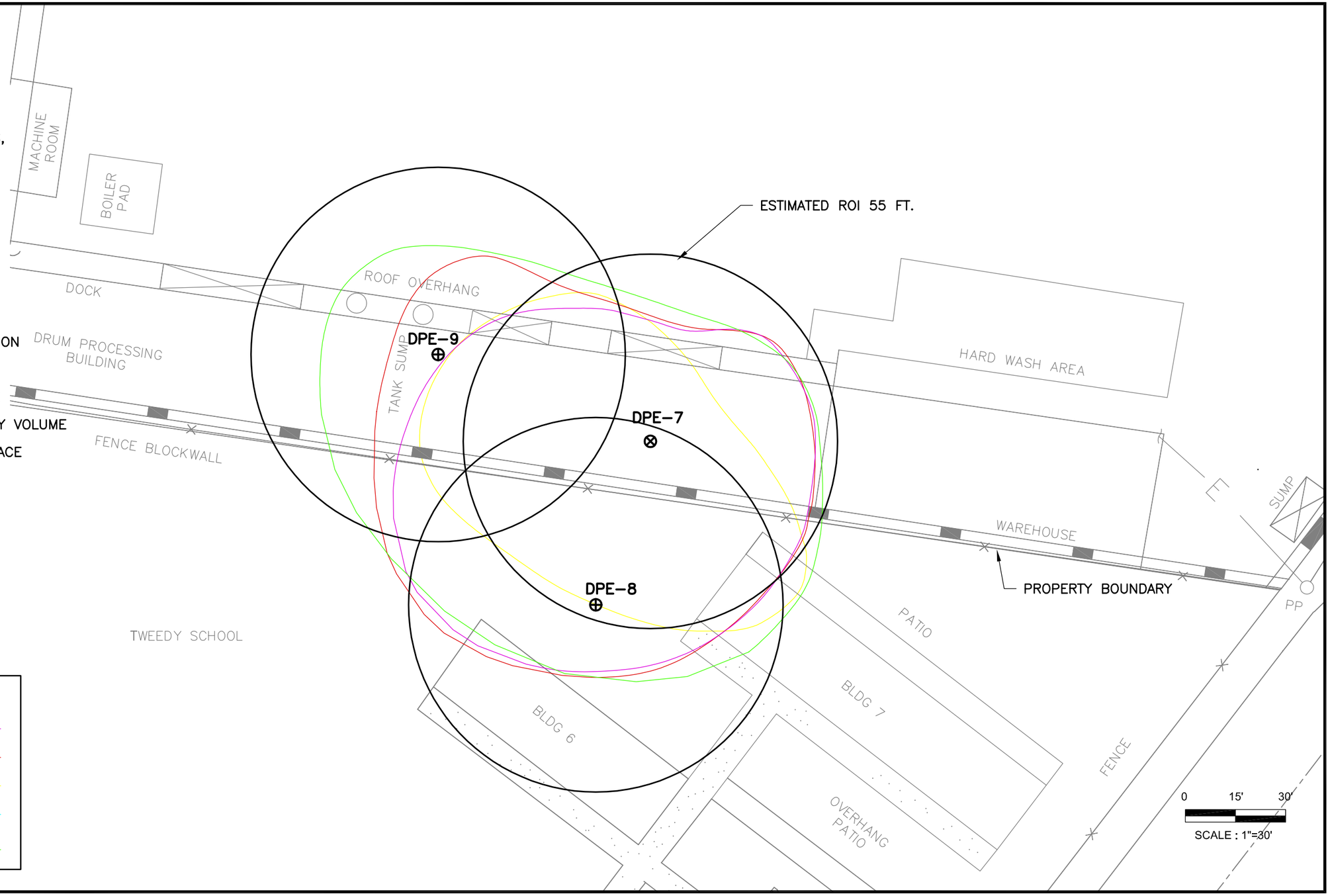

1,000 ppbv isopleths:

- PCE
- TCE
- VC
- 1,2-DCE
- 1,1-DCA

IMAGES: cooper drum.jpg
XREFS: J:\Cooper Drum\CADD\20040605\xref_base.dwg

PLOT BY: RTAYLOR – Sep 06, 2007 – 9:40:13am
DRAWING: C:\Documents and Settings\rtaylor\Desktop\Q40605F0X_20ft.dwg

URS

Drum Processing Area
1,000 ppbv VOCs at 20 Feet BGS

Figure 5-13

NOTE:

SVE–1 AND SVE–2 ARE NOW REFERRED TO AS DPE–1 & DPE–7, RESPECTIVELY THIS IS TO MORE ACCURATELY REFLECT THE PROPOSED WELL FIELD LAYOUT PRESENTED IN THE DESIGN PLANS, SHEET C–1.

LEGEND:

- ⊕ – PROPOSED DPE WELL
- DPE – DUAL–PHASE EXTRACTION
- FT – FEET
- ROI – RADIUS OF INFLUENCE
- PPBV – PARTS PER BILLION BY VOLUME
- BGS – BELOW GROUND SURFACE
- PCE – TETRACHLOROETHENE
- TCE – TRICHLOROETHENE
- VC – VINYL CHLORIDE
- 1,2–DCE – 1,2–DICHLOROETHENE
- 1,1–DCA – 1,1–DICHLOROETHANE

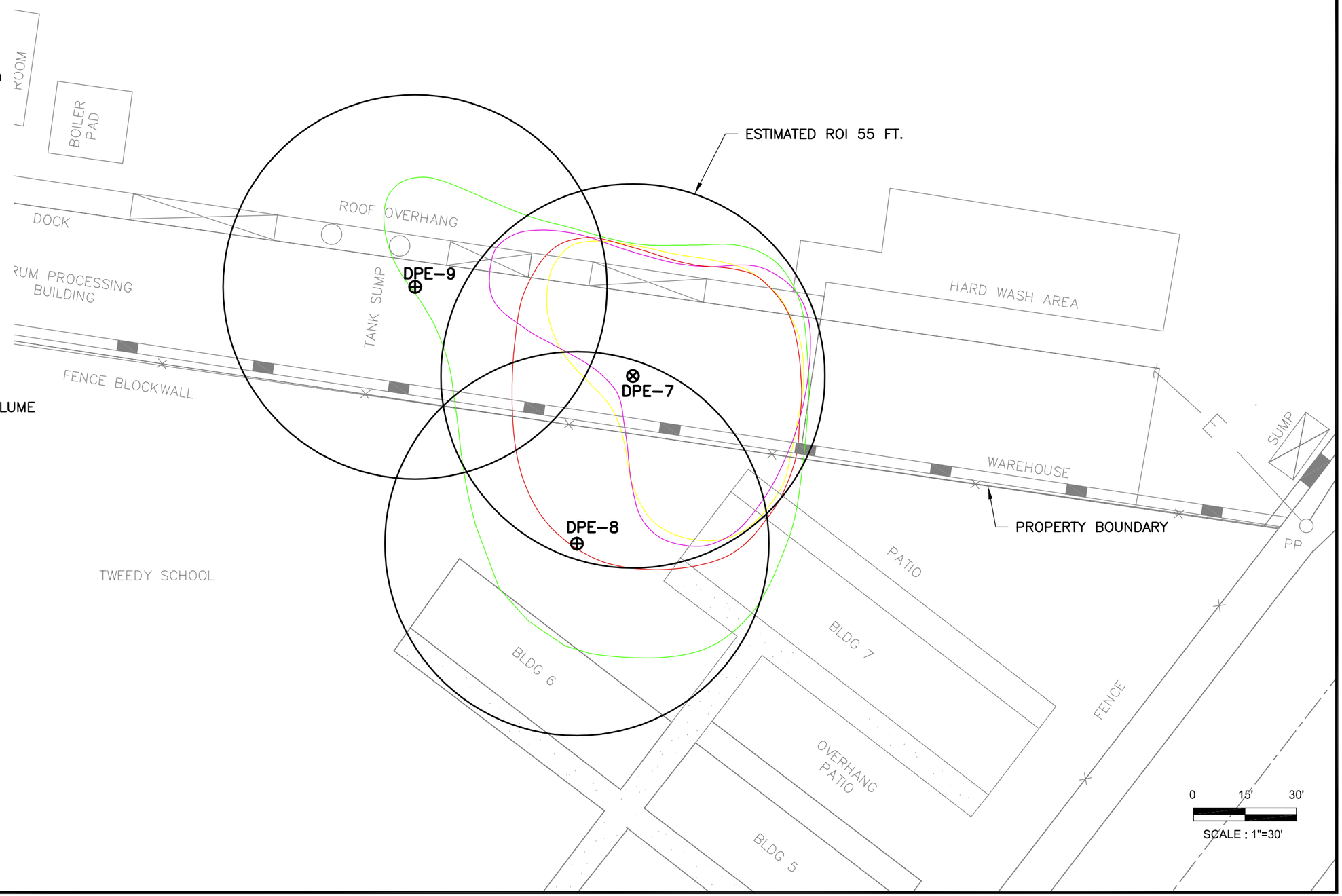

1,000 ppbv isopleths:

- PCE
- TCE
- VC
- 1,2-DCE
- 1,1-DCA

IMAGES: cooper drum.jpg
XREFS: C:\Documents and Settings\rtaylor\Desktop\xref_base.dwg

PLOT BY: RTAYLOR – Sep 06, 2007 – 9:35:21am
DRAWING: C:\Documents and Settings\rtaylor\Desktop\040605FOX_30ft.dwg

URS

Drum Processing Area
1,000 ppbv VOCs at 30 Feet BGS

Figure 5-14

Figure 5-15.
Flow Rate vs. Vacuum during Pilot Test

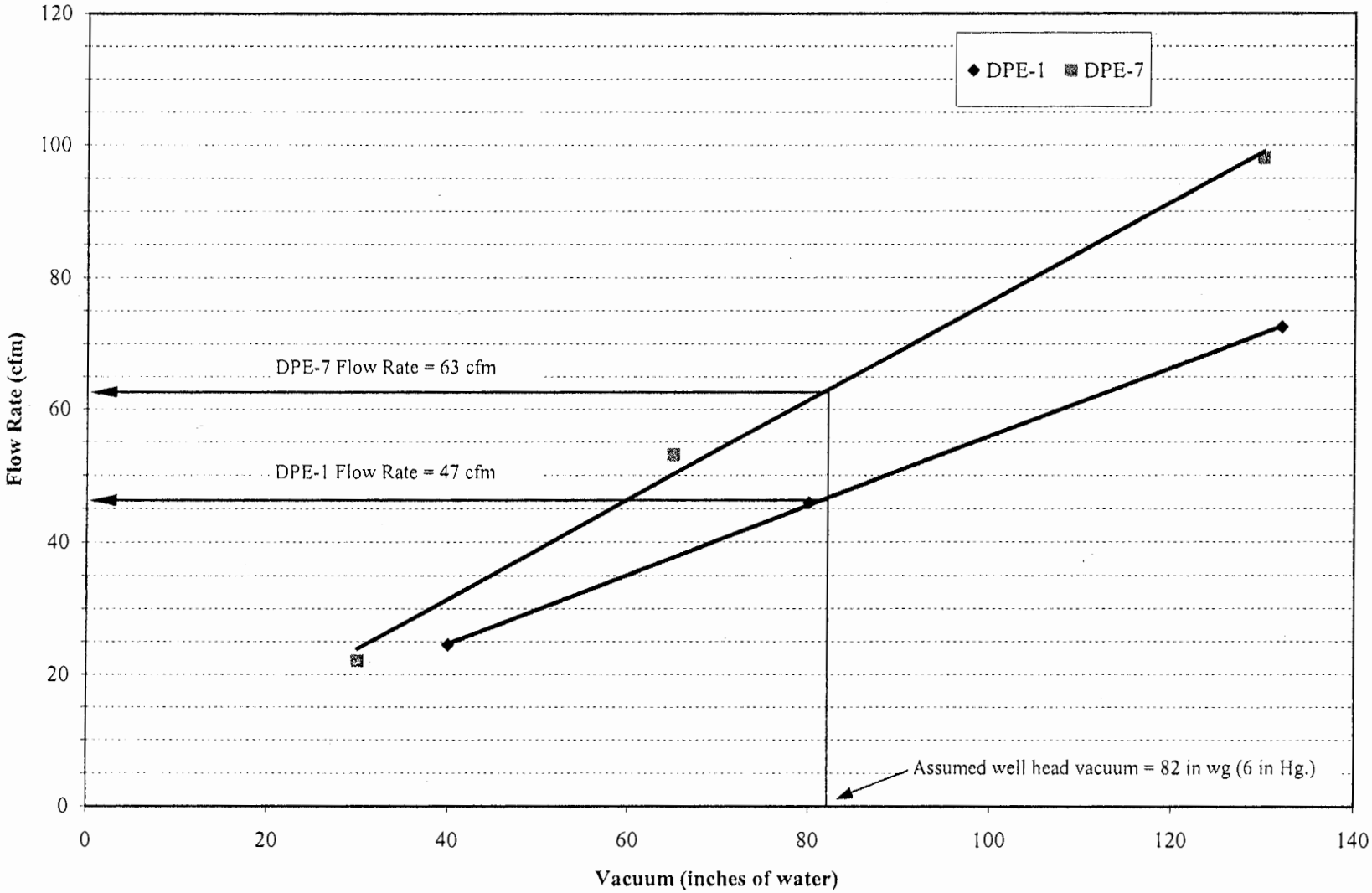

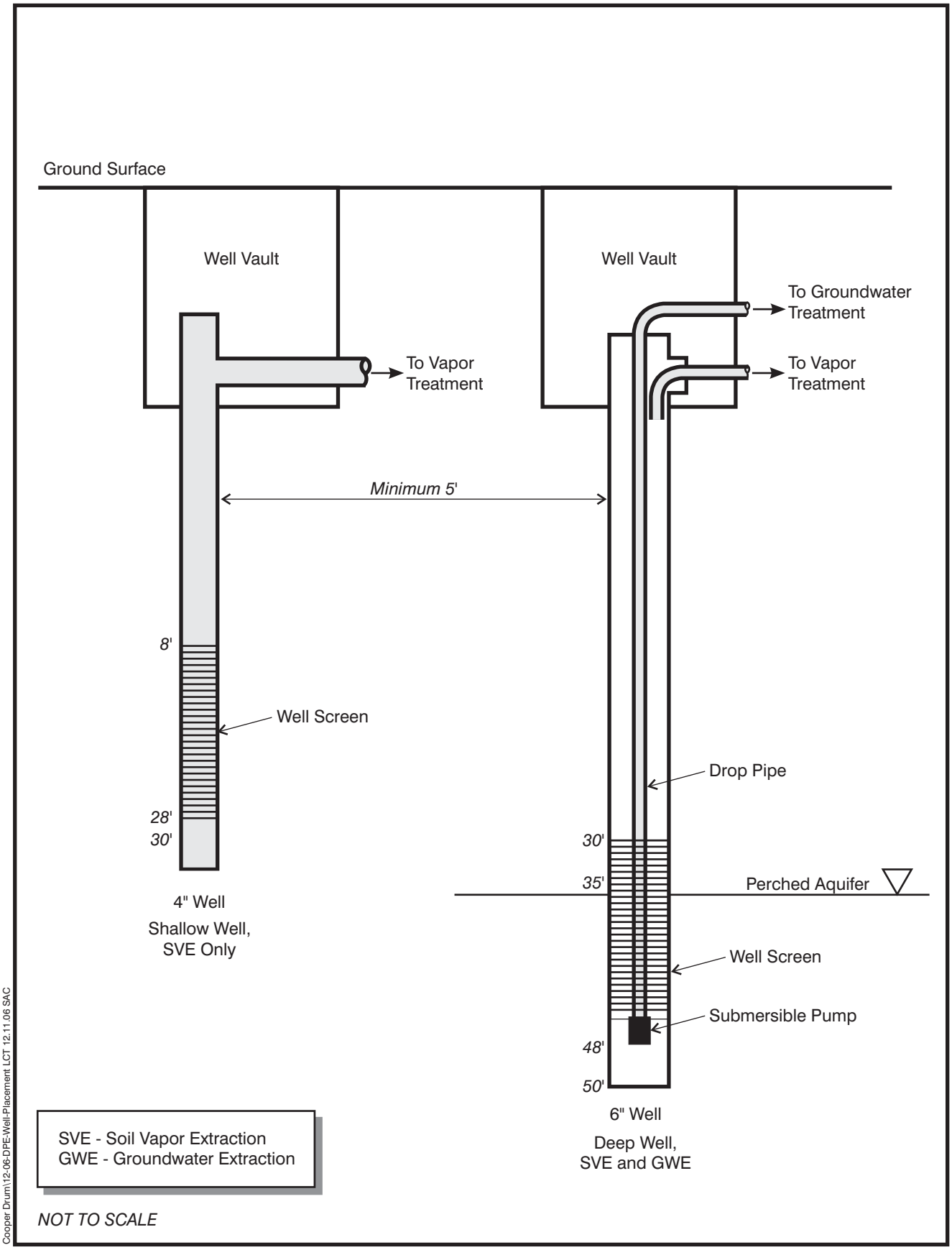

URS

DPE Well Configuration

Figure 5-16

UNITED STATES ENVIRONMENTAL PROTECTION AGENCY
REGION IX

SOIL REMEDIAL DESIGN

OPERABLE UNIT 2
COOPER DRUM COMPANY SUPERFUND SITE

PREPARED BY
URS GROUP, INC.

SEPTEMBER 2007

J:\Cooper Drum\CADD\Drawings\30k_REMEDIATION_SYSTEM\G-1.dwg User:David_Larson Plotted:Sep 26, 2007 - 10:39am Last Save:Sep 25, 2007 - 10:45am

VICINITY MAP

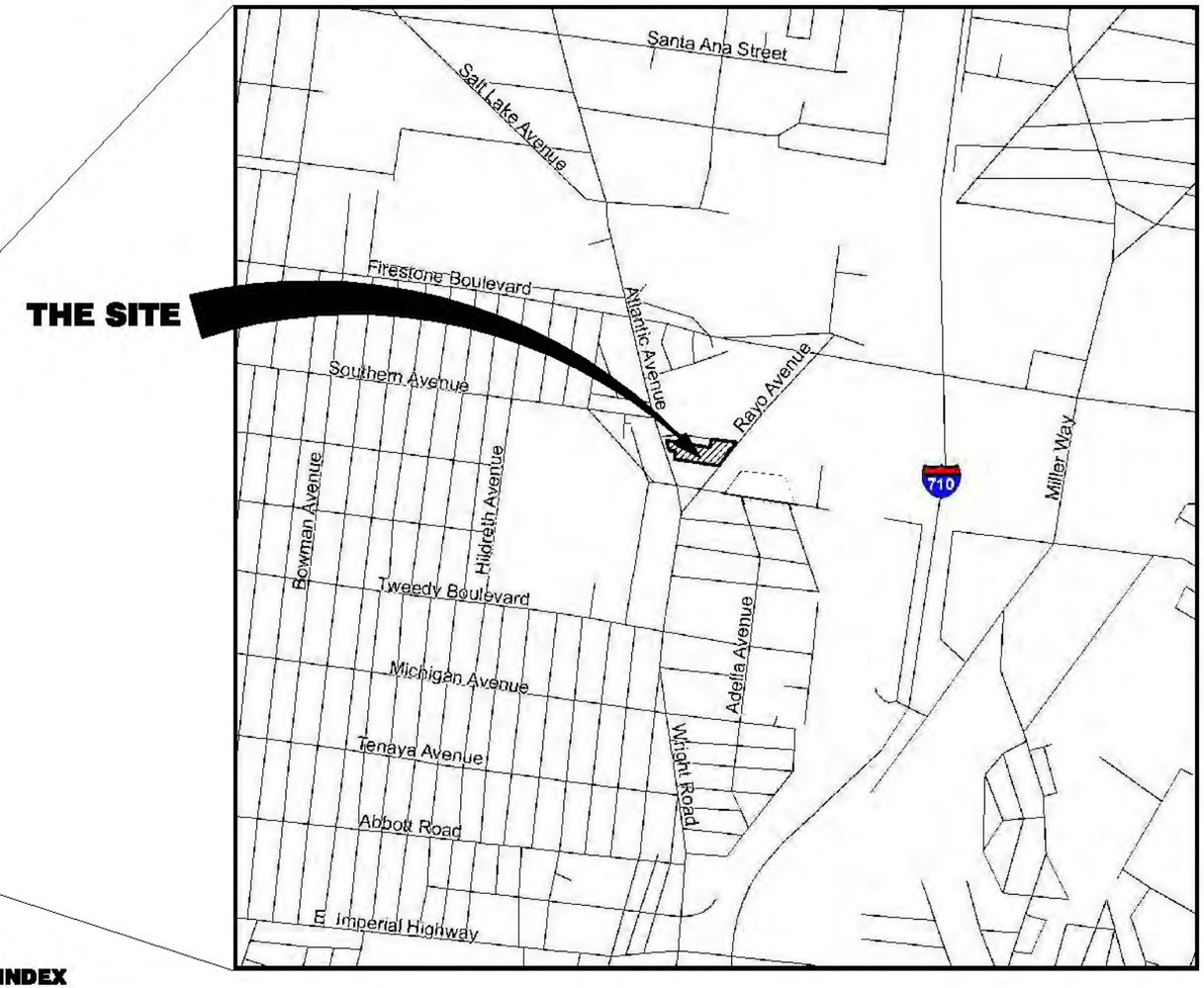

LOCATION MAP

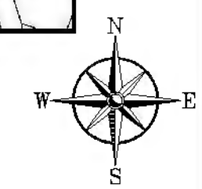

SHEET INDEX

G–1	TITLE SHEET
G–2	SITE LOCATION MAP, SHEET INDEX AND GENERAL NOTES
P–1	SIMPLIFIED SOIL GAS AND GROUNDWATER REMEDIATION SYSTEM PROCESS FLOW DIAGRAM
C–1	TREATMENT COMPOUND LOCATION AND SITE PLAN
C–2	SOIL REMOVAL ACTION PRIMARY EXCAVATION PLAN
C–3	TRENCH DETAILS
C–4	FENCE DETAILS
C–5	DPE AND VAPOR MONITORING WELL CONSTRUCTION DETAILS
S–0	STRUCTURAL GENERAL NOTES
S–1	TREATMENT COMPOUND DETAIL
S–2	CONCRETE DETAILS
M–1	TYPICAL DPE WELL HEAD DETAILS
E–1	ELECTRICAL GENERAL NOTES AND SYMBOLS
E–2	ELECTRICAL SITE PLAN
E–3	SINGLE LINE DIAGRAM

NO.	DATE	DESCRIPTION	NO.	DATE	DESCRIPTION

REVISIONS

DESIGNED BY: M. WIDMANN
DRAWN BY: D. LARSON
CHECKED BY: N/A

URS
2870 Gateway Oaks Drive, Ste. 150
Sacramento, CA 95833-3500
TEL: (916) 679-2000
FAX: (916) 679-2900

REGISTERED PROFESSIONAL ENGINEER EDMUND D. HATTER No. 64625 Exp. ____ CIVIL STATE OF CALIFORNIA

SOIL REMEDIAL DESIGN
COOPER DRUM COMPANY SUPERFUND SITE
9316 SOUTH ATLANTIC AVE, SOUTH GATE
LOS ANGELES COUNTY , CALIFORNIA 90280

SITE LOCATION MAP, SHEET INDEX AND GENERAL NOTES

SCALE	DATE	DWG. FILE	SHEET NO.
N.T.S.	8/22/2007	G–2.dwg	G-2

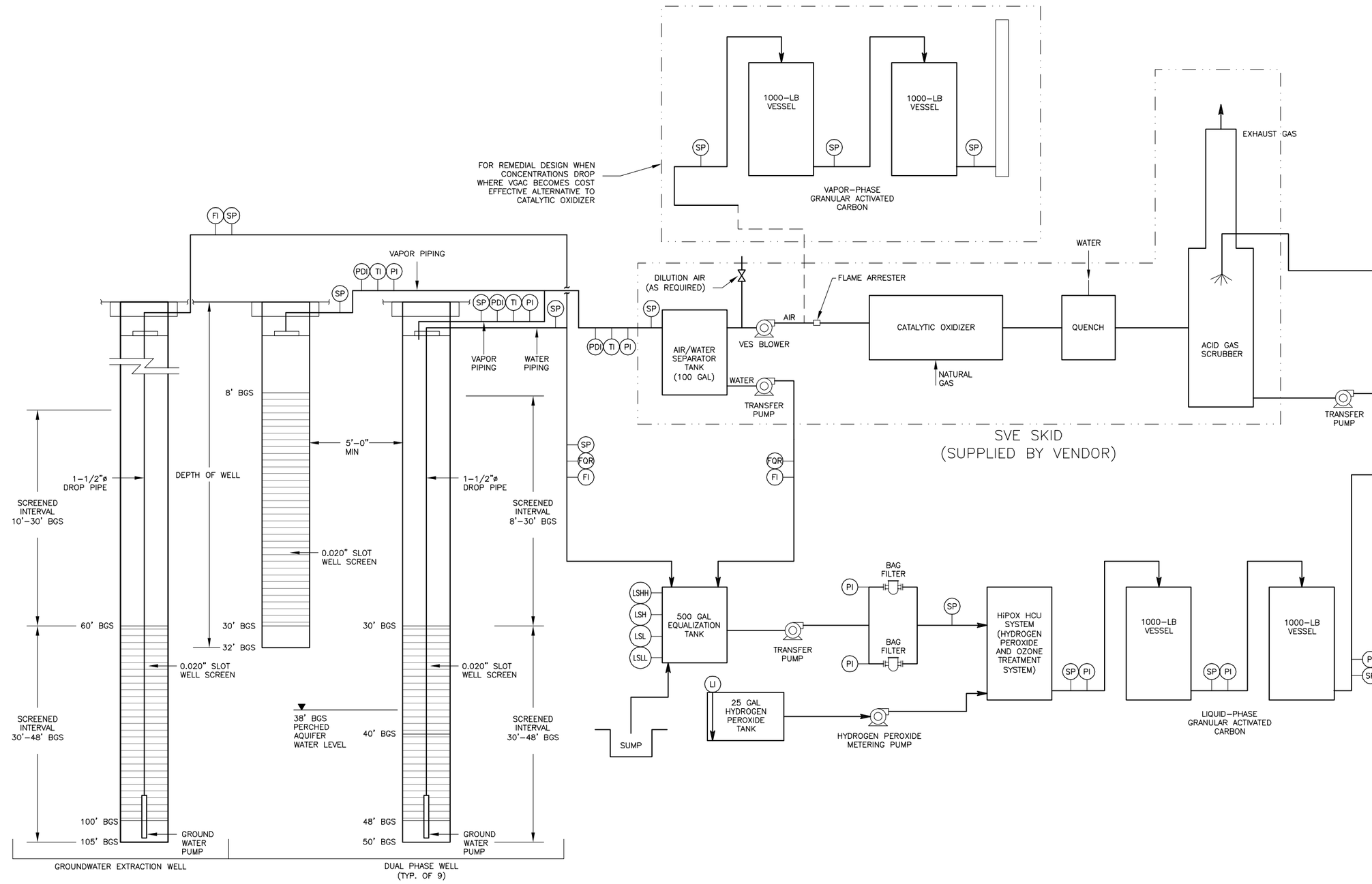

ABBREVIATIONS

BGS – BELOW GROUND SURFACE
CFM – STANDARD CUBIC FEET PER MINUTE
DPA – DRUM PROCESSING AREA
DPE – DUAL-PHASE EXTRACTION
FI – FLOW INDICATOR
FQR – FLOW TOTALIZER RECORDER
GPM – GALLONS PER MINUTE
HWA – HARD WASH AREA
LI – LEVEL INDICATOR
PDI – PRESSURE DIFFERENTIAL INDICATOR
PI – PRESSURE INDICATOR
SP – SAMPLE PORT
SVE – SOIL VAPOR EXTRACTION
TI – TEMPERATURE INDICATOR
VES – VAPOR EXTRACTION SYSTEM
VP – VAPOR MONITORING UNIT
XHH – pH HIGH-HIGH SWITCH
XLL – pH LOW-LOW SWITCH
XI – pH INDICATOR

NO.	DATE	DESCRIPTION	NO.	DATE	DESCRIPTION

REVISIONS

DESIGNED BY: M. WIDMANN
DRAWN BY: D. LARSON
CHECKED BY: N/A

URS
2870 Gateway Oaks Drive, Ste. 150
Sacramento, CA 95833-3200
TEL: (916) 679-2000
FAX: (916) 679-2900

REGISTERED PROFESSIONAL ENGINEER EDMUND D. FARTER No. 64825 Exp. ____ CIVIL STATE OF CALIFORNIA

SOIL REMEDIAL DESIGN
COOPER DRUM COMPANY SUPERFUND SITE
9316 SOUTH ATLANTIC AVE, SOUTH GATE
LOS ANGELES COUNTY , CALIFORNIA 90280

SIMPLIFIED SOIL GAS AND GROUNDWATER REMEDIATION SYSTEM PROCESS FLOW DIAGRAM

SCALE:	DATE:	DWG. FILE:	SHEET NO.
N.T.S.	8/22/2007	P-1.dwg	P-1

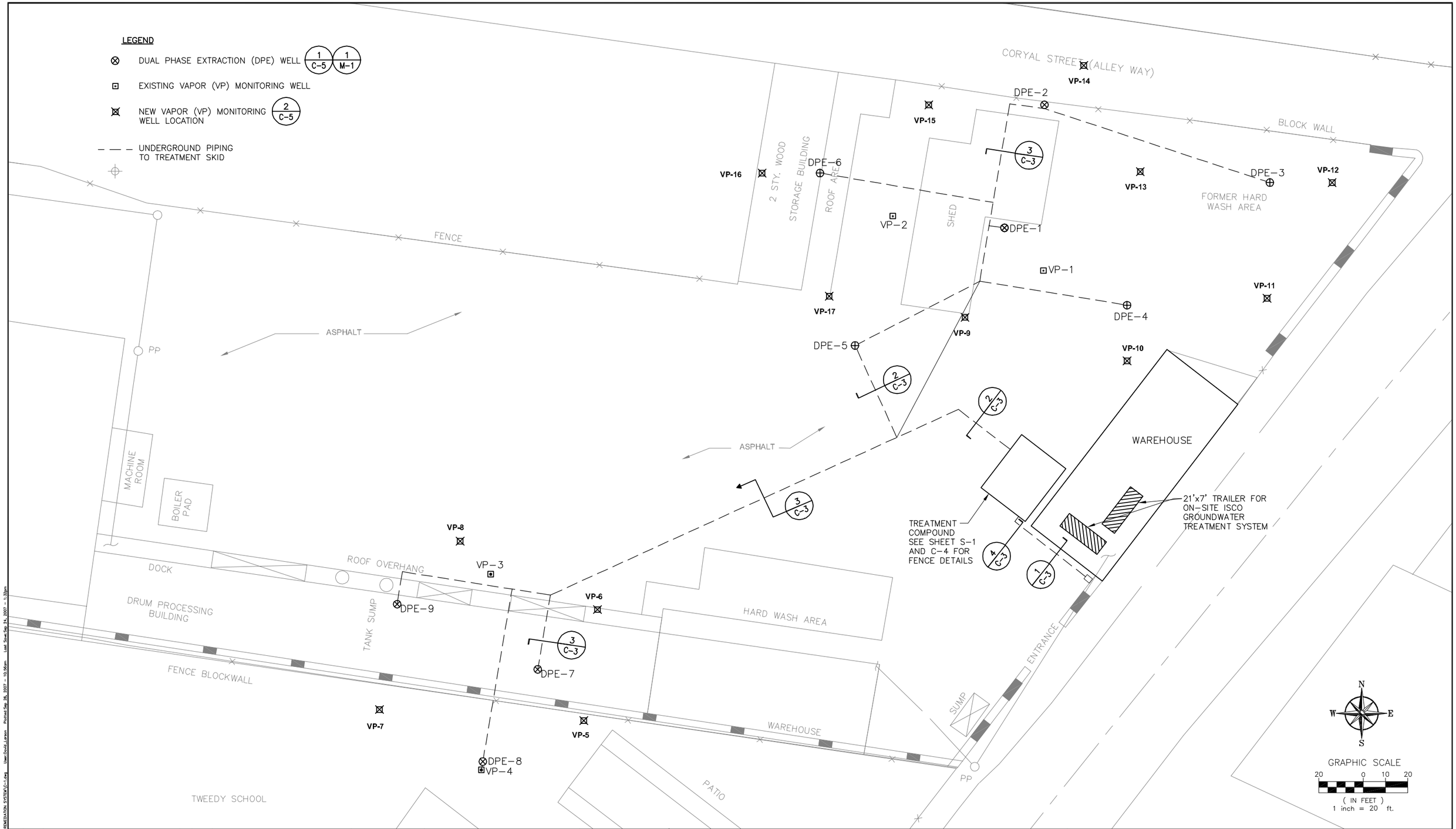

NO.	DATE	DESCRIPTION	NO.	DATE	DESCRIPTION

REVISIONS

DESIGNED BY: M. WIDMANN
DRAWN BY: D. LARSON
CHECKED BY: N/A

URS
2870 Gateway Oaks Drive, Ste. 150
Sacramento, CA 95833-3200
TEL: (916) 679-2000
FAX: (916) 679-2900

REGISTERED PROFESSIONAL ENGINEER EDMUND D. TARTER No. 64825 Exp. CIVIL STATE OF CALIFORNIA

SOIL REMEDIAL DESIGN
COOPER DRUM COMPANY SUPERFUND SITE
9316 SOUTH ATLANTIC AVE, SOUTH GATE
LOS ANGELES COUNTY , CALIFORNIA 90280

TREATMENT COMPOUND LOCATION AND SITE PLAN

SCALE:	DATE:	DWG. FILE:	SHEET NO:
1"=20'-0"	8/22/2007	C-1.dwg	C-1

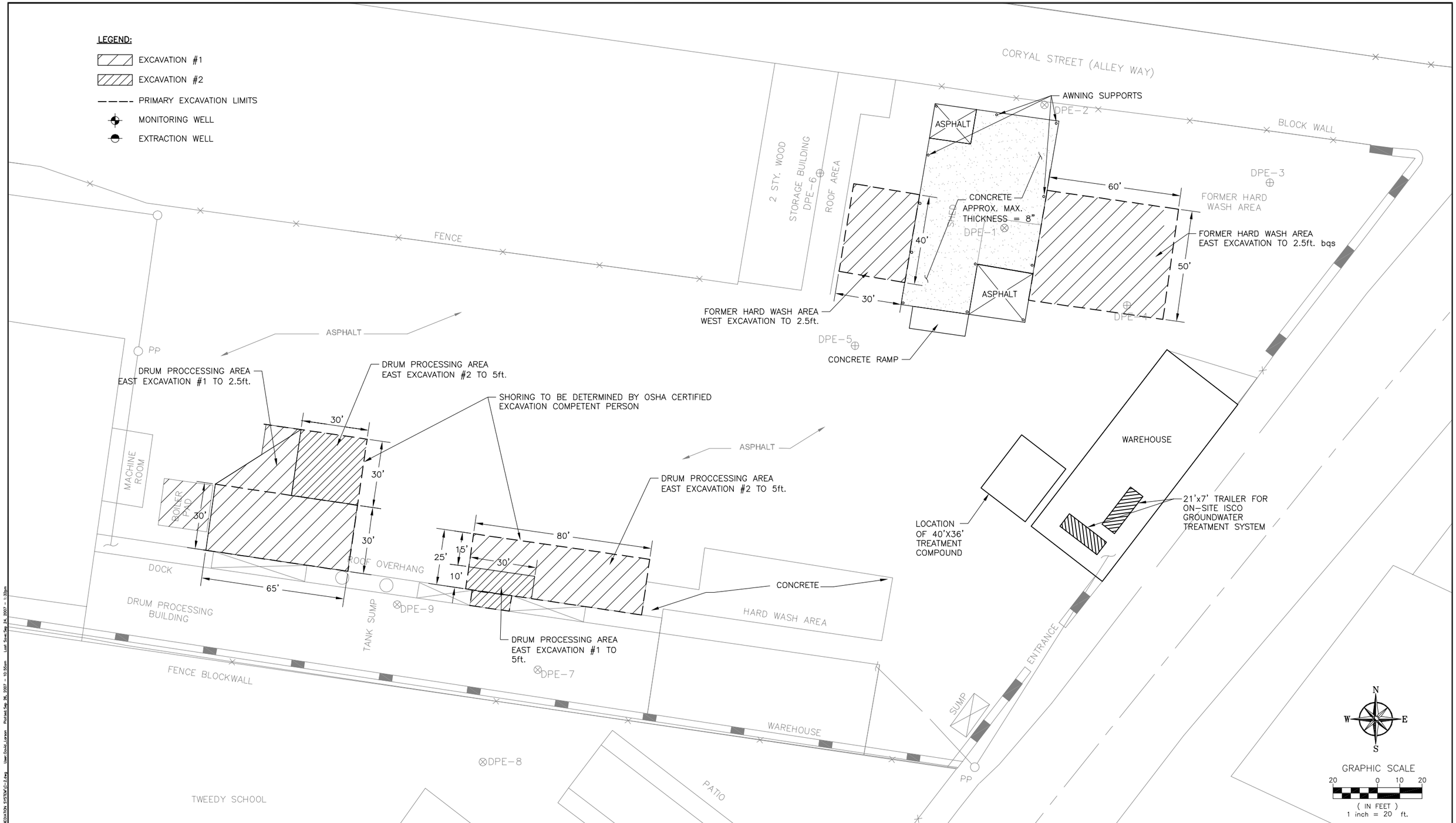

NO.	DATE	DESCRIPTION	NO.	DATE	DESCRIPTION

REVISIONS

DESIGNED BY: M. WIDMANN
DRAWN BY: D. LARSON
CHECKED BY: N/A

URS
2870 Gateway Oaks Drive, Ste. 150
Sacramento, CA 95833-3200
TEL: (916) 679-2000
FAX: (916) 679-2900

REGISTERED PROFESSIONAL ENGINEER EDMUND D. TARTER No. 64825 Exp. ____ CIVIL STATE OF CALIFORNIA

SOIL REMEDIAL DESIGN
COOPER DRUM COMPANY SUPERFUND SITE
9316 SOUTH ATLANTIC AVE, SOUTH GATE
LOS ANGELES COUNTY , CALIFORNIA 90280

SOIL REMOVAL ACTION
PRIMARY EXCAVATION PLAN

SCALE:	DATE:	DWG. FILE:	SHEET NO.
1"=20'-0"	8/22/2007	C-2.dwg	C-2

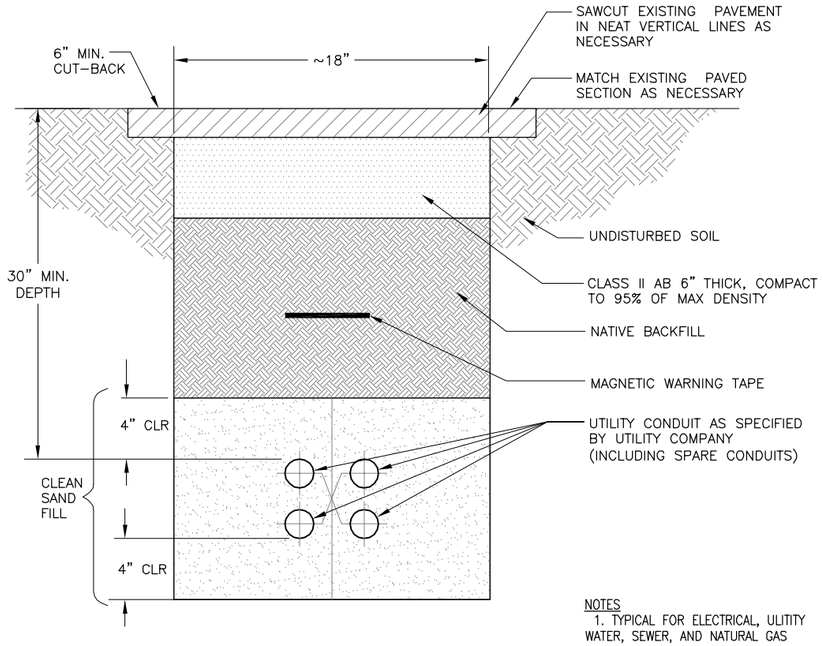

NOTES
1. TYPICAL FOR ELECTRICAL, ULITITY WATER, SEWER, AND NATURAL GAS

1 C-3 **UTILITY TRENCH DETAIL**
NOT TO SCALE

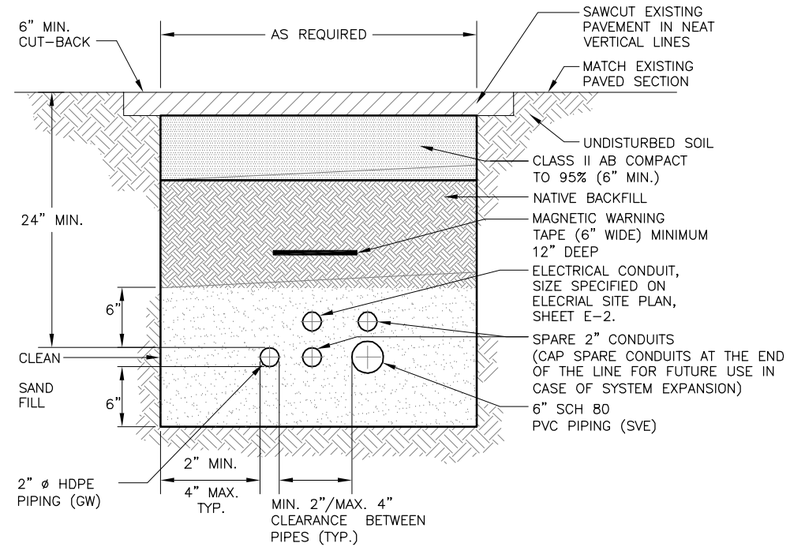

2 C-3 **DPE WELL - TRENCH DETAIL (MAIN CONVEYANCE)**
NOT TO SCALE

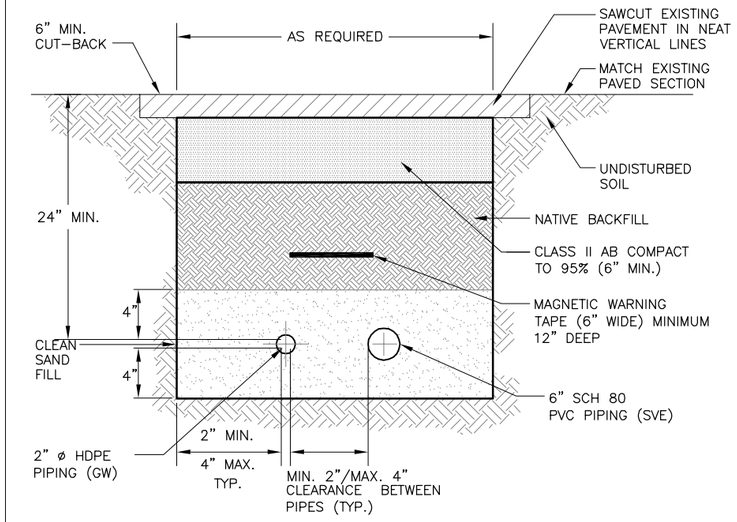

NOTES
1. IMMEDIATELY FOLLOWING THE DPE-1 JUNCTION TO THE CONVEYANCE LINE, WYE OUTLET, THE PIPE DIAMETER SHALL BE INCREASED FROM 1" TO 2" SCH 80 PVC. FOR THE GW LINE.
2. FROM EACH DPE WELL THE GROUNDWATER PIPE SHALL OF 1" SCH 80 PVC PIPE.
3. IMMEDIATELY PRIOR TO THE JUNCTION CONNECTION DPE-7, 8, AND 9 AND THE OTHER DPE WELLS, THE PIPE SIZE SHALL BE INCREASED FROM 1" SCH 80 PVC TO 2" SCH 80 PVC.

3 C-3 **DPE WELL - TRENCH DETAIL (TYPICAL)**
NOT TO SCALE

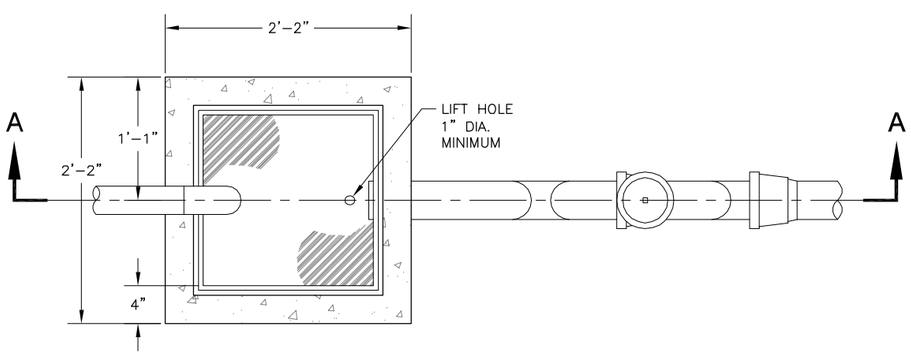

4 C-3 **SAMPLING BOX PLAN**
NOT TO SCALE

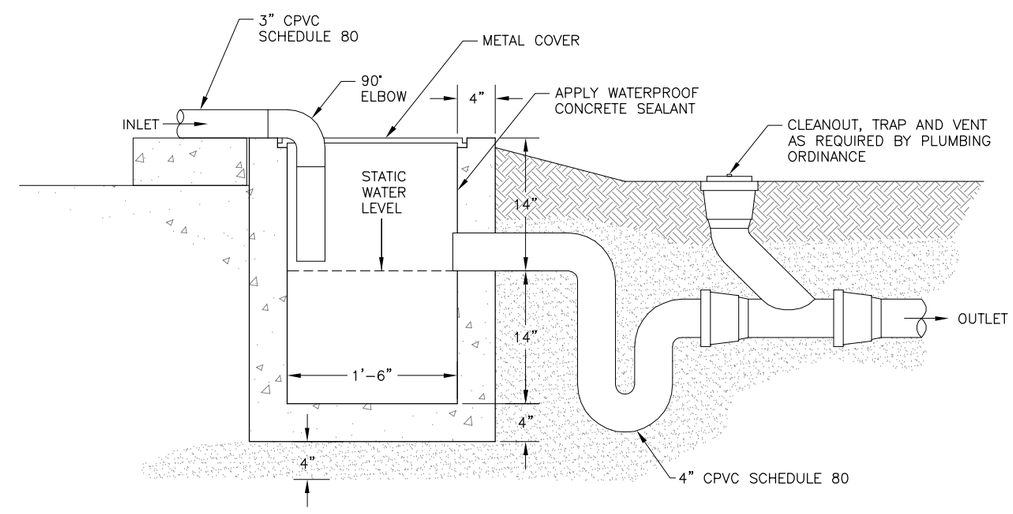

SECTION A-A
NOT TO SCALE

NO.	DATE	DESCRIPTION	NO.	DATE	DESCRIPTION

REVISIONS

DESIGNED BY: M. WIDMANN
DRAWN BY: D. LARSON
CHECKED BY: N/A

URS
2870 Gateway Oaks Drive, Ste. 150
Sacramento, CA 95833-3200
TEL: (916) 679-2000
FAX: (916) 679-2900

REGISTERED PROFESSIONAL ENGINEER EDMOND D. TAXTER No. 64825 Exp. ____ CIVIL STATE OF CALIFORNIA

SOIL REMEDIAL DESIGN
COOPER DRUM COMPANY SUPERFUND SITE
9316 SOUTH ATLANTIC AVE, SOUTH GATE
LOS ANGELES COUNTY , CALIFORNIA 90280

TRENCH DETAILS

SCALE:	DATE:	DWG. FILE:	SHEET NO.
N.T.S.	8/22/2007	C-3.dwg	C-3

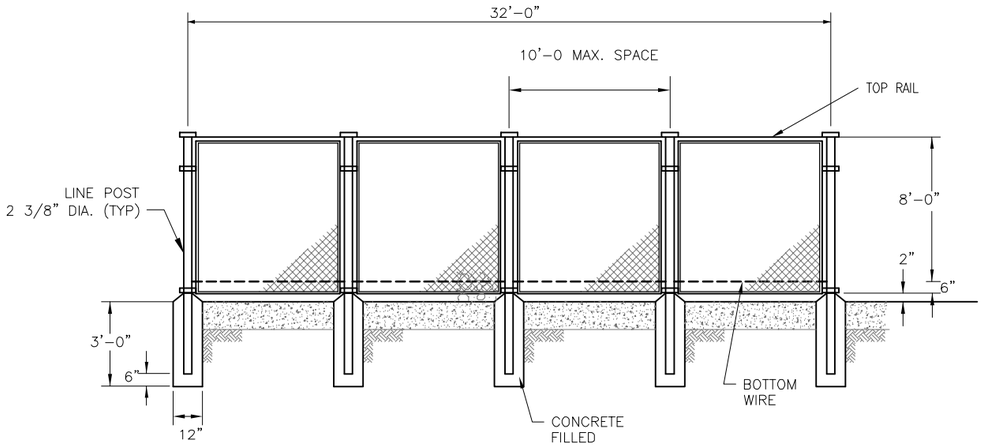

NOTES:

1. PROVIDE POST CAP FOR GATE POSTS, CORNER POSTS AND LINE POSTS.
2. PROVIDE 12'-0" GATE AS SPECIFIED BY PLAN, DETAIL 5.
3. FENCING AND GATE SHALL BE 8 FEET HIGH, 9 GAUGE GALVANIZED, CHAIN-LINK, PERMANENT CONSTRUCTION WITH PRE INSTALLED WHITE VINYL SECURITY SLOTS.
4. LINE POSTS SHALL BE 2" NOMINAL DIA., CORNER, END AND BRACE POSTS SHALL BE 2½" NOMINAL DIA., GATE POST SHALL BE 4" NOMINAL DIA.
5. SEE SHEET S-1 FOR SITE LAYOUT AND FENCE POSITION.

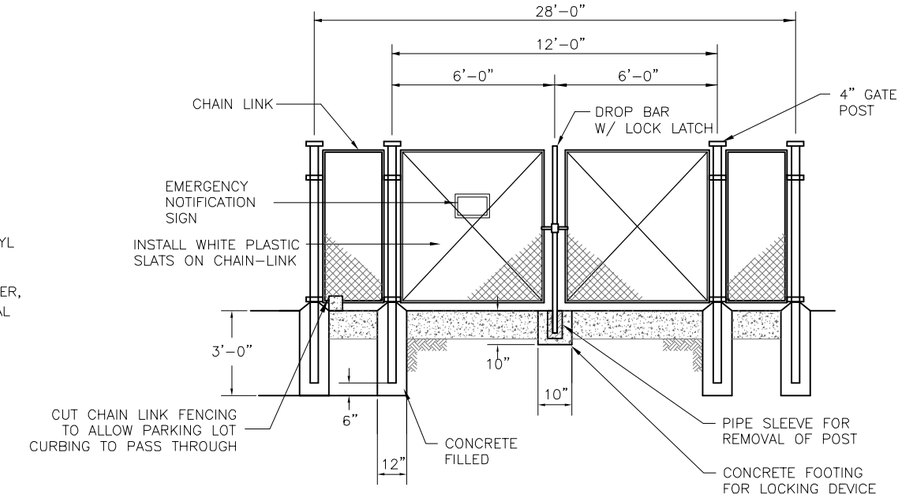

1 / S-1 CHAIN LINK FENCE DETAIL
NOT TO SCALE

3 / S-1 TYPICAL GATE DETAIL
NOT TO SCALE

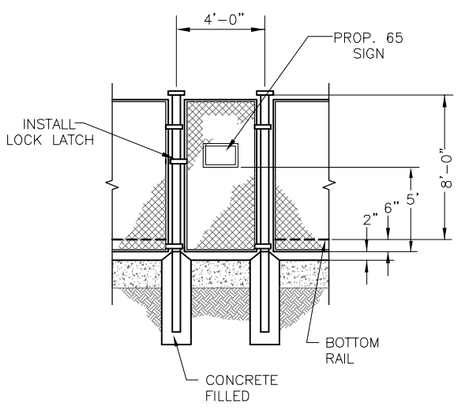

2 / S-1 PERSONNEL GATE
NOT TO SCALE

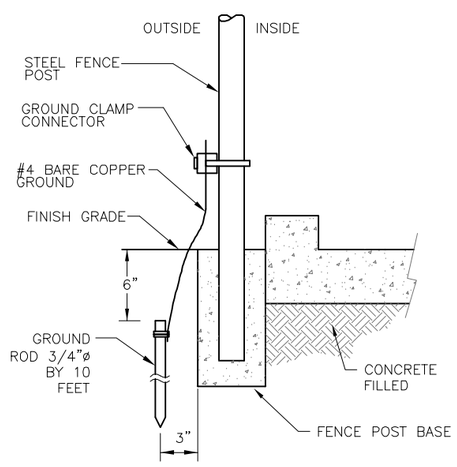

4 / S-1 FENCE GROUNDING DETAIL
NOT TO SCALE

NOTES:

1. SEE S-1 FOR NUMBER OF GUARD POST TO BE USED.
2. THE EXACT LOCATION OF BOLLARD MAY BE CHANGED BY THE INSPECTOR IN THE FIELD.
3. THE STEEL PIPE ABOVE GROUND SHALL BE PAINTED A MINIMUM OF TWO FIELD COATS OF ZINC CHROMATE PRIMER, AND YELLOW COLOR PAINT COVER.

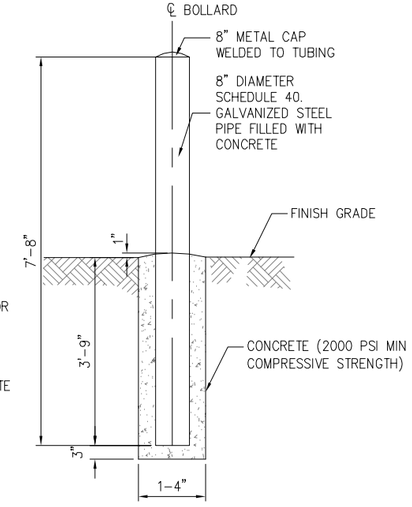

5 / S-1 TYPICAL BOLLARD DETAIL
NOT TO SCALE

NOTES:

1. SEE S-1 FOR NUMBER OF GUARD POST TO BE USED.
2. THE EXACT LOCATION OF BOLLARD MAY BE CHANGED BY THE INSPECTOR IN THE FIELD.
3. THE STEEL PIPE ABOVE GROUND SHALL BE PAINTED A MINIMUM OF TWO FIELD COATS OF ZINC CHROMATE PRIMER, AND YELLOW COLOR PAINT COVER.

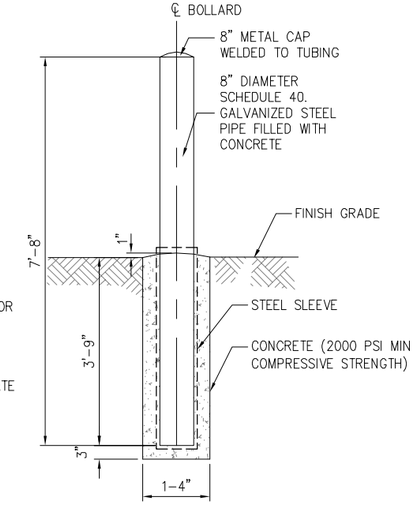

6 / S-1 TYPICAL REMOVABLE BOLLARD DETAIL
NOT TO SCALE

NO.	DATE	DESCRIPTION	NO.	DATE	DESCRIPTION

REVISIONS

DESIGNED BY: M. WIDMANN
DRAWN BY: D. LARSON
CHECKED BY: N/A

URS
2870 Gateway Oaks Drive, Ste. 150
Sacramento, CA 95833-3200
TEL: (916) 679-2000
FAX: (916) 679-2900

REGISTERED PROFESSIONAL ENGINEER EDMOND D. TARTER No. 64825 Exp. ____ CIVIL STATE OF CALIFORNIA

SOIL REMEDIAL DESIGN
COOPER DRUM COMPANY SUPERFUND SITE
9316 SOUTH ATLANTIC AVE, SOUTH GATE
LOS ANGELES COUNTY , CALIFORNIA 90280

FENCE DETAILS

SCALE:	DATE:	DWG. FILE:	SHEET NO.
N.T.S.	8/22/2007	C-4.dwg	C-4

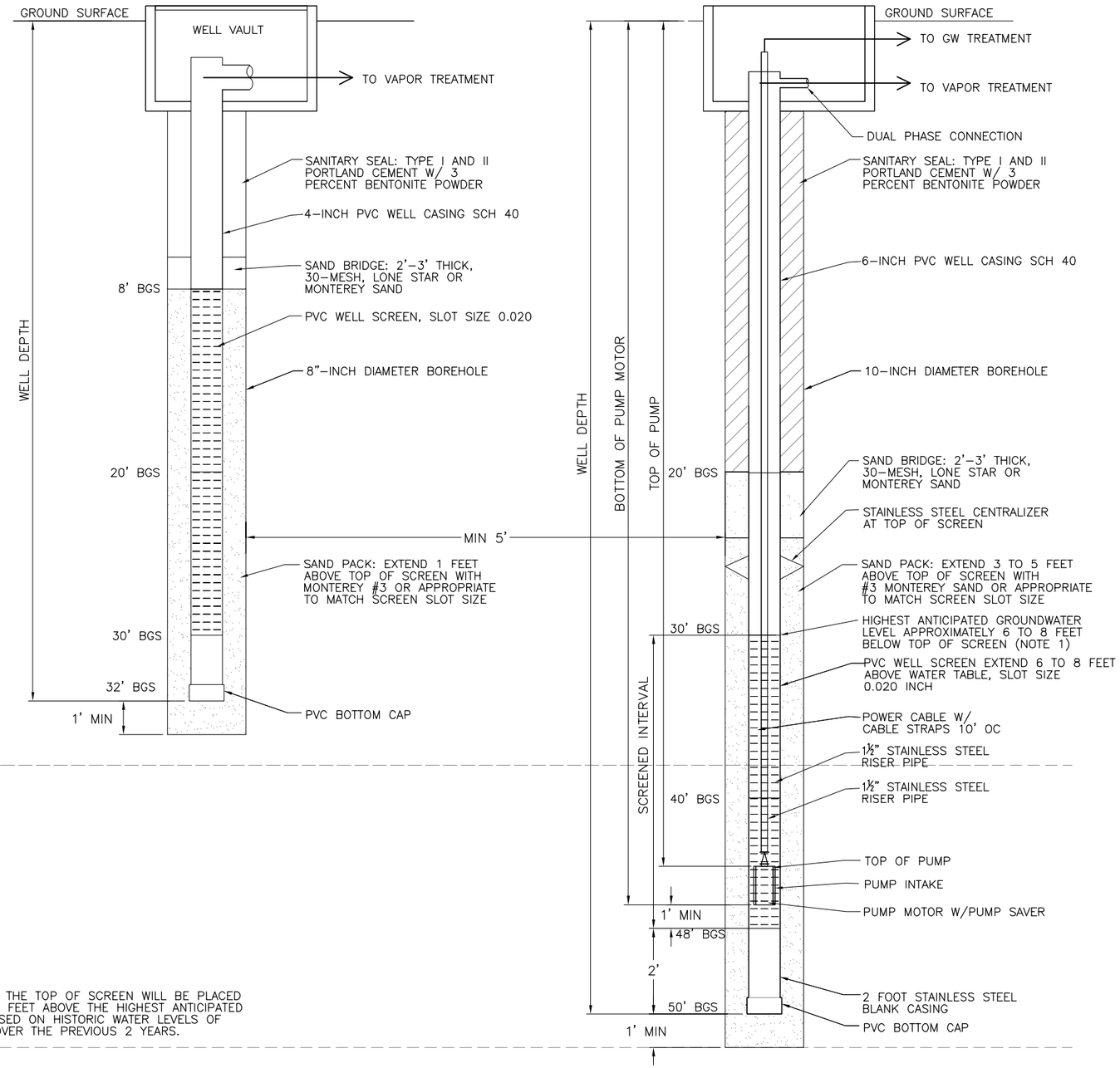

NOTES:

1. FOR DPE WELLS, THE TOP OF SCREEN WILL BE PLACED A MINIMUM OF 4 FEET ABOVE THE HIGHEST ANTICIPATED WATER LEVEL BASED ON HISTORIC WATER LEVELS OF NEARBY WELLS OVER THE PREVIOUS 2 YEARS.

1 / C-1 **DPE WELL CONSTRUCTION DETAIL**
NOT TO SCALE

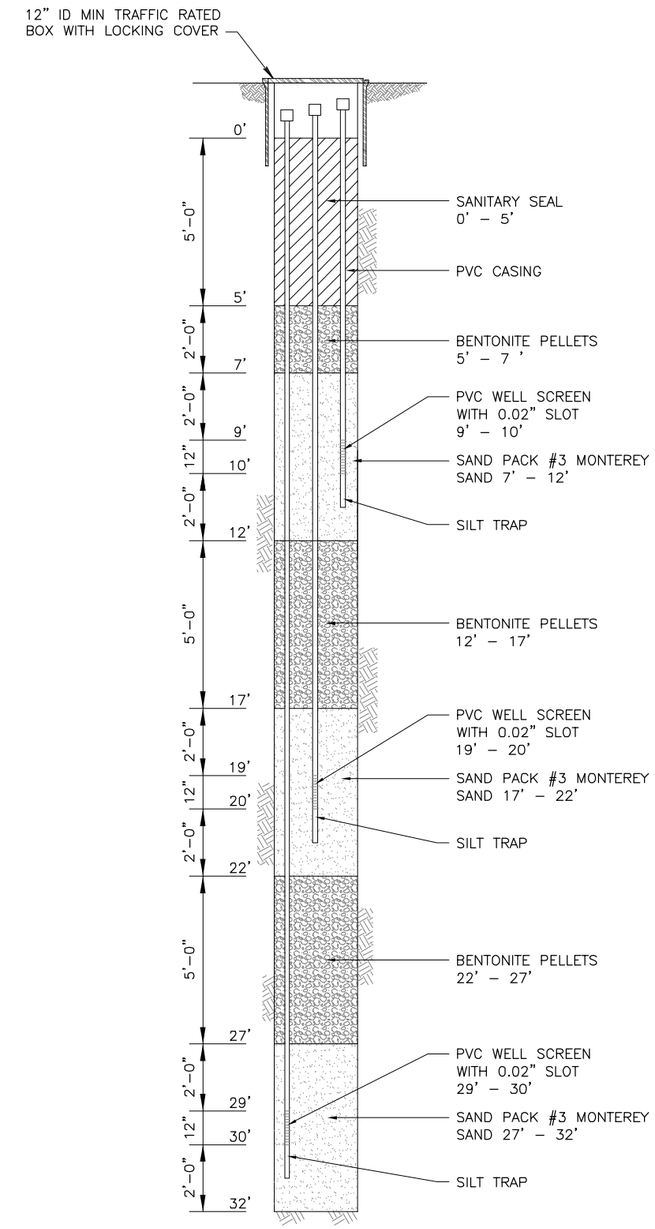

2 / C-1 **VAPOR MONITORING WELL DETAIL**
NOT TO SCALE

NO.	DATE	DESCRIPTION	NO.	DATE	DESCRIPTION

REVISIONS

DESIGNED BY: M. WIDMANN
DRAWN BY: D. LARSON
CHECKED BY: N/A

URS
2870 Gateway Oaks Drive, Ste. 150
Sacramento, CA 95833-3200
TEL: (916) 679-2000
FAX: (916) 679-2900

REGISTERED PROFESSIONAL ENGINEER EDMOND D. TARTER No. 64825 Exp. ____ CIVIL STATE OF CALIFORNIA

SOIL REMEDIAL DESIGN
COOPER DRUM COMPANY SUPERFUND SITE
9316 SOUTH ATLANTIC AVE, SOUTH GATE
LOS ANGELES COUNTY , CALIFORNIA 90280

DPE AND VAPOR MONITORING WELL CONSTRUCTION DETAILS

SCALE:	DATE:	DWG. FILE:	SHEET NO.
N.T.S.	8/22/2007	C-5.dwg	C-5

STRUCTURAL ABBREVIATIONS

@	AT	HORZ	HORIZONTAL
ABV	ABOVE	HT	HEIGHT
AB	ANCHOR BOLTS	HB	HIGH STRENGTH BOLT (A325)
ACI	AMERICAN CONCRETE INSTITUTE	ICBO	INTERNATIONAL CONFERENCE OF BUILDING OFFICIALS
ADDNL	ADDITIONAL		
AFF	ABOVE FINISH FLOOR	ID	INSIDE DIAMETER
AGG	AGGREGATE	IN (")	INCH
AISC	AMERICAN INSTITUTE FOR STEEL CONSTRUCTION	INTR	INTERIOR
		INFO	INFORMATION
ALT	ALTERNATE	JT	JOINT
APPROX	APPROXIMATE	LL	LIVE LOAD
ARCH	ARCHITECT/ ARCHITECTURAL	LGTH	LENGTH
ASTM	AMERICAN SOCIETY FOR TESTING AND MATERIALS	LONG	LONGITUDINAL
		LT WT	LIGHT WEIGHT
AWS	AMERICAN WELDING SOCIETY	LWC	LIGHT WEIGHT CONCRETE
BLW	BELOW	MAX	MAXIMUM
BLDG	BUILDING BLDG	MB	MACHINE BOLT
BLK	BLOCK BLOCKING BLKG	MCJ	MASONRY CONTROL JOINT
BOC	BOTTOM OF CONCRETE	MECH	MECHANICAL
BOF	BOTTOM OF FOOTING	MFR	MANUFACTURER
BOTT	BOTTOM	MIN	MINIMUM
BRG	BEARING	MISC	MISCELLANEOUS MISC
BTW	BETWEEN	MTL	METAL
CBC	CALIFORNIA BUILDING CODE	NIC	NOT IN CONTRACT
CC	CENTER TO CENTER	NO (#)	NUMBER OR POUNDS
CE	CIVIL ENGINEER	NOM	NOMINAL
CIP	CAST IN PLACE	NSG	NON SHRINK GROUT
CJ	CONSTRUCTION	NTS	NOT TO SCALE NTS
CMU	MCONCRETE MASONRY UNIT	OC	CENTER
CONC	CONCRETE	OD	OUTSIDE DIAMETER
CONN	CONNECTION	OPG	OPENING
CONT	CONTINUOUS	PC	PIECE
CTR	CENTER CTR CENTERED	PCC	PRECAST CONCRETE
DIA (ø)	DIAMETER	PERP	PERPENDICULAR
DL	DEAD LOAD	PSI	POUNDS PER SQUARE INCH
DN	DOWN	PT	POINT
DSA	DIVIDION OF STATE ARCHITECTS	R	RADIUS
DTL	DETAIL	REINF	REINFORCING
DWG	DRAWING	REQ	REQUIRED
EA	EACH	SAD	SEE ARCHITECTURAL DRAWINGS
EF	EACH FACE	SCHED	SCHEDULE
EJ	EXPANSION JOINT	SE	STRUCTURAL ENGINEER
ELV	ELEVATION ELEV	SEIS	SEISMIC
EOS	EDGE OF SLAB	JT	JOINT
EOR	ENGINEER OF RECORD	SHRWL	SHEARWALL
EQ (=)	EQUAL	SIM	SIMILAR
EW EF	EACH WAY EACH FACE	SJ	SHRINKAGE JOINT
EW	EACH WAY	SOG	SLAB ON GRADE
EXTR	EXTERIOR	SPEC	SPECIFICATION
f'c	MINIMUM ULTIMATE COMPRESSIVE STRENGTH OF CONCRETE	SQ	SQUARE
		STD	STANDARD
FD	FLOOR DRAIN	STL	STEEL
FF	FINISH FLOOR	STRUC	STRUCTURAL
FFE	FINISH FLOOR ELEVATION	SYM	SYMMETRICAL
FG	FINISH GRADE	T24	TITLE 24 CALIFORNIA CODE
f'm	MINIMUM ULTIMATE COMPRESSIVE STRENGTH OF MASONRY	THK	THICK/THICKNESS
		TOC	TOP OF CONCRETE TOC
FNDN	FOUNDATION	TOF	TOP OF FOOTING/TOP OF FRAMING
FOC	FACE OF CONCRETE FOC		
FOM	FACE OF MASONRY	T.O. SLAB	TOP OF SLAB
FRMG	FRAMING FRMG	TOS	TOP OF STEEL
FT (')	FOOT/FEET	TOT	TOTAL
FTG	FOOTING	TOW	TOP OF WALL
Fy	SPECIFIED YIELD STRENGTH OF REIFORCING, PSI OR SPECIFIED MINIMUM	TRAN	TRANSVERSE
		TYP	TYPICAL
		T&B	TOP AND BOTTOM
KSI	YIELD STRESS OF STEEL	UBC	UNIFORM BUILDING CODE
GRD	GRADE	UNO	UNLESS NOTED OTHERWISE
GT	GROUT	VERT	VERTICAL
HC	HANDICAP	VIF	VERIFIY IN FIELD
HD	HOLD DOWN	w/	WITH
HDR	HEADER	WT	WEIGHT
HK	HOOK	WWF	WELDED WIRE FABRIC

INSPECTION NOTES:

1. GENERAL: IN ADDITION TO THE INSPECTIONS REQUIRED BY SECTION 108 OF THE 2006 IBC, THE GOVERNMENT SHALL EMPLOY AN IBC APPROVED SPECIAL INSPECTOR TO PERFORM SPECIAL INSPECTIONS AND TESTS AS INDICATED IN THE SCHEDULE BELOW.
2. INSPECTORS: ALL TESTS AND INSPECTIONS SHALL BE PERFORMED BY AN INDEPENDENT INSPECTION AGENCY WHICH IS IN THE EMPLOYMENT OF THE GOVERNMENT.
3. ALL SPECIAL INSPECTION AND TESTING AGENCIES SHALL BE QUALIFIED PER ASTM E329 AND APPROVED BY THE GOVERNMENT.
4. PROVIDE INSPECTION REPORTS TO BUILDING DEPARTMENT, GOVERNMENT, ARCHITECT AND ENGINEER WITHIN TWO WEEKS OF PERFORMANCE INSPECTION OR TEST.
5. REFER TO CHAPTER 17 OF THE CODE FOR OTHER REQUIRED SPECIAL INSPECTIONS
6. IT IS THE CONTRACTOR'S SOLE RESPONSIBILITY TO SEE THAT THE TESTS AND INSPECTIONS ARE PERFORMED. JOB SITE VISITS BY THE STRUCTURAL ENGINEER DO NOT CONSTITUTE AND ARE NOT A SUBSTITUTE FOR INSPECTIONS.
7. WHERE THE CONTRACTOR CHOOSES TO USE OPTIONAL OR ALTERNATIVE MEANS OF FASTENING OR ANCHORING MATERIALS AS SHOWN ON THE PLANS AND DETAILS AND REQUIRES SPECIAL FIELD INSPECTION, SUCH AS FIELD WELDING, ADHESIVE OR EXPANSION ANCHORS, ETC. ALL ADDITIONAL SPECIAL INSPECTION AND TESTING COSTS SHALL BE PAID FOR BY THE GOVERNMENT AND REIMBURSED BY THE CONTRACTOR.

FOUNDATIONS:

1. REFER TO RECOMMENDATIONS IN SOILS REPORT, FILE NO. __N/A__ BY __N/A__ DATED __N/A_____. ALLOWABLE SOIL BEARING PRESSURE FOR FOUNDATION IS 1,500 PSF (DL + LL) AND 2,000 PSF (DL + LL + SEISMIC OR WIND).
   1.1 SOIL CLASSIFICATION IS CL FOR TRACY SITE.
2. ALL SITEWORK AND GRADING SHALL BE DONE IN COMPLIANCE WITH THE SOILS REPORT AND SPECIFICATIONS OR ENGINEER'S RECOMMENDATIONS.
3. SOILS ENGINEER SHALL VERIFY CONDITION AND/OR ADEQUACY OF ALL FOUNDATION EXCAVATIONS PRIOR TO PLACEMENT OF CONCRETE.
4. IT SHALL BE THE RESPONSIBILITY OF THE CONTRACTOR TO SHORE AND BRACE ALL EXCAVATIONS AS REQUIRED.
5. ALL FOUNDATIONS ARE SHOWN AND DIMENSIONED AS BEING FORMED. FOUNDATIONS MAY BE PLACED IN NEAT EXCAVATIONS PROVIDED FOOTINGS ARE INCREASED 2" IN WIDTH, SEE TYPICAL EXCAVATION DETAIL.
6. EXCAVATIONS SHALL BE CLEANED OF ALL DEBRIS AND LOOSE SOIL. STANDING WATER SHALL BE REMOVED PRIOR TO CONCRETE PLACEMENT.
7. FOUNDATION DEPTHS INDICATED ON PLANS ARE MINIMUMS. ACTUAL DEPTHS ARE TO BE CONFIRMED BY SOILS ENGINEER ON THE JOB SITE.
8. BOTTOMS OF ALL FOUNDATIONS SHALL BE LEVEL. CHANGES IN BOTTOM OF FOUNDATION ELEVATION SHALL BE MADE ACCORDING TO STEPPED FOOTING DETAILS.
9. FOOTINGS SHALL BE CENTERED UNDER WALLS AND/OR COLUMNS UNLESS OTHERWISE INDICATED ON DRAWINGS.
10. CONTRACTOR SHALL CHECK FOOTING FORMS TO VERIFY THAT THEY ARE SQUARE & PLUMB. THE CONTRACTOR SHALL ALSO VERIFY THAT ALL INSERTS & EMBEDS ARE IN THEIR CORRECT LOCATION & ORIENTATION PRIOR TO PLACING CONCRETE.
11. NOTIFY THE STRUCTURAL ENGINEER 48 HOURS IN ADVANCE OF PLACING CONCRETE.

1. CONTRACTOR SHALL BE RESPONSIBLE FOR ARRANGING SPECIAL INSPECTION.

DUTIES & RESPONSIBILITIES OF THE INSPECTOR ARE COVERED IN SECTION 1704.1 OF IBC.

	ITEM	CONTINUOUS INSPECTION	PERIODIC INSPECTION	REMARKS
CONCRETE	SLAB ON GRADE (f'c = 4000 PSI)	— —	YES	PRIOR TO POURING OF CONCRETE & DURING THE TAKING OF TEST SPECIMENS
	WALL (f'c = 4000 PSI)	— —	YES	PRIOR TO POURING OF CONCRETE & DURING THE TAKING OF TEST SPECIMENS
	GRADE BEAM AND FOUNDATION (f'c = 3000 PSI)	— —	YES	PRIOR TO POURING OF CONCRETE & DURING THE TAKING OF TEST SPECIMENS & PLACING OF REINF'D CONCRETE
	STRUCTURAL CONCRETE CONC. ON METAL DECK (f'c = 3000 PSI) (SECTION 1704.4)	YES	— —	PRIOR TO POURING OF CONCRETE DURING THE TAKING OF TEST SPECIMENS CHECK REINFORCEMENT LOCATION
	BOLTS IN CONCRETE (SECTION 1704.4)	— —	YES	PRIOR TO AND DURING THE PLACEMENT OF CONCRETE AROUND BOLTS
FIELD WELDING	STRUCTURAL STEEL (ELECTRODE = E70XX)	YES	— —	DURING THE WELDING
	REINFORCING STEEL (ELECTRODE = E90XX) (SECTION 1704.4)	YES	— —	DURING THE WELDING
	METAL ROOF DECK WELDING	— —	YES	DURING THE WELDING
	STRUCTURAL WELDING (INCLUDING HSA WELDING) (SECTION 1704.3)	YES	— —	EXCEPT FOR WELDING PERFORMED IN THE SHOP OF AN APPROVED FABRICATOR
	REINFORCING STEEL (SECTION 1704.4)	— —	YES	PRIOR TO COVER UP
	HIGH STRENGTH BOLTS (A325 & A490) (SECTION 1704.3)	— —	YES	DURING INSTALLATION OF BOLTS & TIGHTENING
	SPRAY APPLIED FIREPROOFING (SECTION 1704.11)	— —	YES	DURING THE SPRAYING

2. A CERTIFICATE OF SATISFACTORY COMPLETION OF WORK REQUIRING SPECIAL INSPECTION MUST BE COMPLETED AND SUBMITTED TO THE FIELD INSPECTION DIVISION.
3. AN APPLICATION FOR OFF-SITE FABRICATION MUST BE SUBMITTED TO THE FIELD INSPECTION DIVISION FOR APPROVAL PRIOR TO FABRICATION.
4. A CERTIFICATE OF COMPLIANCE FOR OFF-SITE FABRICATION MUST BE COMPLETED AND SUBMITTED TO THE FIELD INSPECTION DIVISION PRIOR TO ERECTION OF PREFABRICATED COMPONENTS.

DESIGN CRITERIA (2006 IBC & UFC 1-200-01):

2.0 REFERENCED STRUCTURAL STANDARDS IN THE 2006 IBC
- 2.01 DESIGN LOADS.....ASCE 7-05
- 2.02 CONCRETE.....ACI 318-05
- 2.03 MASONRY.....ACI 530-05/ASCE 5-05/TMS 402-05
- 2.04 STEEL (ASD) .....AISC 360-05
- 2.05 STEEL (SEISMIC).....AISC 341-05
- 2.06 STEEL (COLD-FORMED LGS).....NAS 01 INCL. 2004 SUPPLEMENT
  - 2.06.1 GENERAL.....AISI GENERAL-04
  - 2.06.2 HEADER.....AISI HEADER-04
  - 2.06.3 TRUSS.....AISI TRUSS-04
  - 2.06.4 WALL STUD.....AISI WSD-04
  - 2.06.5 LATERAL.....AISI LATERAL-04
- 2.07 WOOD (ASD).....AF&PA NDS-05

1. BUILDING CODE: 2006 IBC & UFC 1-200-01
2. GRAVITY LOADS:
   (DL):
   - ROOF 20 psf
   - EXTERIOR WALLS 15 psf
   - INTERIOR WALLS 10 psf

   (LL):
   - ROOF (REDUCIBLE): 20 psf
   - GROUND SNOW, Po (BASE): 0 psf
3. WIND LOADS:
   - BASIC WIND SPEED = 85 MPH (3 SECOND GUST)
   - EXPOSURE = C
   - IMPORTANCE = 1.0
4. Earthquake:
   - Ss = 0.61
   - S1 = 0.18
   - SEISMIC USE GROUP = I
   - IMPORTANCE FACTOR = 1.0
   - SITE CLASS = D
   - SEISMIC DESIGN CATEGORY = D
   - RESPONSE COEEFICIENT, R = 5.5
   - OVERSTRENGTH FACTOR, Wo = 2.5

CONCRETE NOTES

1. THE EXTENT OF THE CONCRETE WORK IS SHOWN ON THE DRAWINGS.
2. SUBMITTALS ARE REQUIRED FOR REINFORCEMENT, CONCRETE MIXES, ADMIXTURES, CURING COMPOUNDS AND ANY OTHER ITEM AS REQUESTED BY THE C.Q.C.
3. CONCRETE TESTING SHALL BE PERFORMED PER ACI REQUIREMENTS:
   - 3.1) A MINIMUM OF ONE SAMPLE A DAY WITH NO LESS THAN 5 SAMPLES FOR A GIVEN CLASS OF CONCRETE, TAKEN FROM 5 RANDOMLY SELECTED BATCHES, OR FROM EACH BATCH IF LESS THAN 5 BATCHES ARE USED.
   - 3.2) A MINIMUM OF ONE SAMPLE PER 150 CUBIC YARDS.
   - 3.3) A MINIMUM OF ONE SAMPLE FOR EACH 5,000 SQUARE FEET OF SLAB OR WALL.
   - 3.4) IF LESS THAN 50 CUBIC YARDS OF A GIVEN CLASS OF CONCRETE IS NEEDED, THE NEED FOR STRENGTH TESTS MAY BE WAIVED WITH THE APPROVAL OF THE ENGINEER.
4. MATERIALS SHALL COMPLY WITH ACI 318-02. PORTLAND CEMENT SHALL BE PER ASTM C 150, TYPE I WITH NORMAL WEIGHT AGGREGATE PER ASTM C33. A 5% (±1.5) AIR ENTRAINING AGENT MAY BE USED IN ALL EXTERIOR CONCRETE. THIS AGENT SHALL BE PER ASTM C 260.
5. COMPRESSIVE STRENGTH OF CONCRETE (28 DAY STRENGTH) AS FOLLOWS:
   - 5.1) FOOTINGS: 3,000 PSI
   - 5.2) SLAB-ON-GRADE: 4,000 PSI
   - 5.3) LEAN CONC. 2,500 PSI
6. PROPORTION ALL MIX DESIGNS TO HAVE A MAXIMUM SLUMP OF 4 INCHES UNLESS SPECIFICALLY APPROVED BY THE ENGINEER.
7. THE MAXIMUM WATER/CEMENT RATIO SHALL BE LIMITED TO 0.45 UNLESS SPECIFICALLY APPROVED BY THE ENGINEER.
8. REINFORCEMENT STEEL: GRADE 60 FY = 60,000 PSI MIN. (ASTM A 615) WELDED WIRE FABRIC SHALL CONFORM TO ASTM A 185
9. ANCHOR BOLTS SHALL BE F1554-36 MATERIAL AND SHALL HAVE A MINIMUM EMBEDMENT OF THE GREATER OF 7 INCHES OR 12 DIAMETERS INTO THE CONCRETE UNLESS CALLED FOR OTHERWISE ON THE DRAWINGS. ALL THREADS SHALL BE CUT AND NOT ROLLED. THE EMBEDDED END SHALL CONSIST OF A HEAVY HEX NUT OR OTHER MECHANICAL ANCHOR. HOOK BOLTS ARE NOT ACCEPTABLE. ALL ANCHOR BOLTS MUST BE CLEANED OF OIL, RUST AND OTHER DELETERIOUS COATINGS PRIOR TO PLACEMENT. SET ALL EMBEDMENTS BY MEANS OF A TEMPLATE WHERE POSSIBLE.
10. DETAILING: ALL REINFORCING SHALL BE DETAILED, BOLSTERED AND SUPPORTED WITH ACI STANDARDS #315, "MANUAL OF STANDARD PRACTICE FOR DETAILING REINFORCING CONCRETE STRUCTURES." NO LAP SPLICES SHALL BE USED IN VERTICAL PIER STEEL. STAGGER ALL SPLICES OF ALL HORIZONTAL REINFORCING.
11. CARE SHALL BE TAKEN TO PREVENT CURLING IN THE SLAB DURING CURING. BURLAP CURING OR OTHER MOISTURE CURE METHOD AS DESCRIBED IN SPECS SHALL BE UTILIZED.
12. PROVIDE CORNER REINFORCING TO MATCH CONTINOUS REINFORCMENT SIZE AND QUANITY AT INTERSECTIONS AND CORNERS OF WALLS AND FOOTINGS.
13. WALL, PIER AND COLUMN DOWELS SHALL BE THE SAME SIZE AND SPACING AS WALL, PIER AND COLUMN REINFORCING, UNLESS NOTED OTHERWISE.

EXECUTION:

14. THE CONCRETE FOUNDATIONS AND SLAB-ON-GRADE MUST BE PLACED ON ENGINEERED FILL, REFER TO SOILS REPORT OR ENGINEER'S RECOMMENDATIONS AS APPROPRIATE.
15. PLACEMENT OF CONCRETE SHALL BE PER ACI 318-05. CONCRETE SHALL BE DEPOSITED AS NEAR TO ITS FINAL POSITION AS POSSIBLE. ALL CONCRETE SHALL BE THOROUGHLY CONSOLIDATED AROUND REINFORCEMENT AND EMBEDDED ITEMS. ALL REINFORCING STEEL MUST BE FREE FROM DIRT, RUST AND OTHER DELETERIOUS MATERIAL PRIOR TO PLACEMENT. DOWELS, ANCHOR BOLTS, INSERTS, ETC. SHALL BE SECURELY TIED IN PLACE PRIOR TO POURING OF CONCRETE OR GROUT.
16. MINIMUM CONCRETE COVERS AS FOLLOWS:
    - 16.1) CAST AGAINST AND PERMANENTLY EXPOSED TO EARTH: CONCRETE PERMANENTLY EXPOSED TO EARTH OR WEATHER: 3"
    - 16.2) NO. 5 BAR OR SMALLER: 1-1/2"
    - 16.3) NO. 6 BAR OR LARGER: CONCRETE NOT EXPOSED TO WEATHER OR IN CONTACT 2"
    - 16.4) WITH GROUND (TO NO. 11 BARS): 3/4"
17. PROVIDE CONTINUOUS 2" X 4" KEY-WAY IN ALL HORIZONTAL AND VERTICAL CONSTRUCTION JOINTS. OTHERWISE, ROUGHEN AND CLEAN ALL CONSTRUCTION JOINTS.
18. NO PIPES, DUCTS OR CONDUIT SHALL BE PLACED IN CONCRETE UNLESS SPECIFICALLY DETAILED OR NOTED.
19. NO ADMIXTURES SHALL BE USED WITHOUT THE APPROVAL OF THE ENGINEER. NO CALCIUM CHLORIDE SHALL BE USED.
20. PROVIDE CURING AND SEALING COMPOUND TO ALL EXPOSED INTERIOR SLABS AND TO ALL EXTERIOR SLABS, WALKS AND CURBS AS SOON AS FINAL FINISHING IS COMPLETE.
21. NOTIFY THE EOR AND THE BUILDING OFFICIAL WHEN REQ'D AT LEAST 48 HOURS PRIOR TO PLACING CONCRETE.

GENERAL:

1. ALL DESIGN AND CONSTRUCTION SHALL COMPLY WITH THE 2006 INTERNATIONAL BUILDING CODE AND ALL APPLICABLE LOCAL ORDINANCES.

GENERAL NOTES:

1. ALL DRAWINGS ARE CONSIDERED TO BE A PART OF THE CONTRACT DOCUMENTS. THE CONTRACTOR SHALL BE RESPONSIBLE FOR THE REVIEW AND COORDINATION OF ALL DRAWINGS AND SPECIFICATIONS PRIOR TO THE START OF CONSTRUCTION. ANY DISCREPANCIES SHALL BE BROUGHT TO THE ATTENTION OF THE ENGINEER PRIOR TO THE START OF CONSTRUCTION SO THAT A CLARIFICATION CAN BE ISSUED. ANY WORK PERFORMED IN CONFLICT WITH THE CONTRACT DOCUMENTS OR CODE REQUIREMENTS SHALL BE CORRECTED BY THE CONTRACTOR AT CONTRACTOR'S EXPENSE AND AT NO EXPENSE TO THE GOVERNMENT.
2. TYPICAL NOTES AND DETAILS SHALL APPLY UNLESS OTHERWISE SHOWN OR NOTED ON DRAWINGS.
3. DETAILS OF CONSTRUCTION NOT FULLY SHOWN SHALL BE OF THE SAME NATURE AS SHOWN FOR SIMILAR CONDITION.
4. ALL WORK SHALL CONFORM TO THE MINIMUM STANDARDS OF THE FOLLOWING CODES: 2006 INTERNATIONAL BUILDING CODE (IBC), AND LATEST REVISIONS REFERRED TO HERE AS "THE CODE", AND OTHER REGULATING AGENCIES WHICH HAVE AUTHORITY OVER ANY PORTION OF THE WORK, INCLUDING THE STATE OF CALIFORNIA DIVISION OF INDUSTRIAL SAFETY, AND THOSE CODES AND STANDARDS LISTED IN THESE NOTES AND SPECIFICATIONS.
5. NOTES AND DETAILS ON DRAWINGS SHALL TAKE PRECEDENCE OVER GENERAL NOTES AND TYPICAL DETAILS. WHERE NO DETAILS ARE GIVEN, CONSTRUCTION SHALL BE AS SHOWN FOR SIMILAR WORK. IF CONFLICTS OCCUR BETWEEN DRAWINGS AND SPECIFICATIONS, THE MORE RESTRICTIVE REQUIREMENT SHALL GOVERN. STRUCTURAL ENGINEER SHALL BE NOTIFIED OF CONFLICTS AND THAT PORTION OF WORK SHOULD NOT PROCEED UNTIL THE CONFLICT IS RESOLVED.
6. SEE ARCHITECTURAL DRAWINGS FOR THE FOLLOWING:
   - 6.1. SIZE AND LOCATION OF ALL DOOR AND WINDOW OPENINGS.
   - 6.2. SIZE AND LOCATIONS OF ALL INTERIOR AND EXTERIOR NON-BEARING PARTITIONS.
   - 6.3. SIZE AND LOCATION OF ALL CONCRETE CURBS, EQUIPMENT PADS, PITS, FLOOR DRAINS, SLOPES, DEPRESSED AREAS, CHANGE IN LEVEL, CHAMFERS, GROOVES, INSERTS, ETC.
   - 6.4. SIZE AND LOCATION OF ALL FLOOR AND ROOF OPENINGS EXCEPT AS SHOWN.
   - 6.5. FLOOR AND ROOF FINISHES.
   - 6.6. DIMENSIONS NOT SHOWN ON STRUCTURAL DRAWINGS.
7. SEE MECHANICAL, PLUMBING AND ELECTRICAL DRAWINGS AND SPECIFICATIONS FOR THE FOLLOWING:
   - 7.1. PIPE RUNS, SLEEVES, HANGERS, TRENCHES, WALL AND SLAB OPENINGS, ETC. EXCEPT AS SHOWN OR NOTED.
   - 7.2. ELECTRICAL CONDUIT RUNS, BOXES, OUTLETS IN WALL OR SLABS.
   - 7.3. CONCRETE INSERTS FOR ELECTRICAL, MECHANICAL OR PLUMBING FIXTURES.
   - 7.4. SIZE AND LOCATION OF MACHINE OR EQUIPMENT BASES AND ANCHOR BOLTS FOR MOTOR MOUNTS.
8. THE CONTRACT STRUCTURAL DRAWINGS AND SPECIFICATIONS REPRESENT THE FINISHED STRUCTURE. THEY DO NOT INDICATE THE METHOD OF CONSTRUCTION.
9. ASTM SPECIFICATIONS ON THE DRAWINGS SHALL BE OF THE LATEST REVISION.
10. CONSTRUCTION MATERIAL SHALL BE SPREAD OUT IF PLACED ON FRAMED ROOF OR FLOOR. LOAD SHALL NOT EXCEED DESIGN LIVE LOAD PER SQUARE FOOT. PROVIDE ADEQUATE SHORING AND/OR BRACING WHERE STRUCTURE HAS NOT ATTAINED DESIGN STRENGTH.
11. HEAVY EQUIPMENT, CRANES AND MATERIAL STOCKPILES SHALL NOT BE LOCATED ON OR ADJACENT TO SHORING.
12. SUBSTITUTIONS FOR STRUCTURAL MEMBERS, HARDWARE, OR DETAILS SHALL BE REVIEWED BY THE ARCHITECT AND STRUCTURAL ENGINEER AND APPROVED BY THE APPROPRIATE AGENCY. FOR A SUBSTITUTION TO BE REVIEWED THE CONTRACTOR SHALL AGREE AND COMPLY WITH THE FOLLOWING:
    - 12.1. THE CONTRACTOR SHALL BE BILLED ON A TIME AND MATERIALS BASIS FOR THE REVIEW OF THE SUBSTITUTION WITH NO GUARANTEE OF APPROVAL.
    - 12.2. VERIFY THAT THE SUBSTITUTION DOES NOT AFFECT DIMENSIONS SHOWN ON DRAWINGS.
    - 12.3. THE CONTRACTOR SHALL ALSO PAY FOR CHANGES TO THE BUILDING DESIGN, WHICH INCLUDES BUT IS NOT LIMITED TO; ENGINEERING DESIGN, DETAILING, APPROVAL AGENCY PROCESS AND CONSTRUCTION COSTS CAUSED BY THE REQUESTED SUBSTITUTION.
    - 12.4. THE PROPOSED SUBSTITUTION IS TO HAVE NO ADVERSE AFFECT ON OTHER TRADES, THE CONSTRUCTION SCHEDULE, OR THE SPECIFIED WARRANTY REQUIREMENTS.
13. NO STRUCTURAL MEMBERS SHALL BE CUT, NOTCHED OR OTHERWISE PENETRATED UNLESS SPECIFICALLY APPROVED BY THE STRUCTURAL ENGINEER IN ADVANCE OR SHOWN ON THESE DRAWINGS.
14. THE CONTRACTOR SHALL VERIFY ALL DIMENSIONS PRIOR TO STARTING CONSTRUCTION. DIMENSIONS AND ELEVATIONS MUST BE VERIFIED WITH ARCHITECTURAL DRAWINGS. IN THE EVENT OF A CONFLICT, THE STRUCTURAL ENGINEER AND ARCHITECT ARE TO BE NOTIFIED IMMEDIATELY. DRAWING SCALES GIVEN ARE APPROXIMATE- DO NOT SCALE PLANS OR DETAILS.
15. SITE VISITS BY STRUCTURAL ENGINEER SHALL NOT BE IN LIEU OF INSPECTIONS.
16. LAP SPLICES SHALL BE IN ACCORDANCE WITH THE FOLLOWING TABLE, UNLESS NOTED OTHERWISE. WHERE CLASSES ARE NOT CALLED OUT ON THE DRAWINGS, USE CLASS "B" SPLICES.

	TENSION SPLICES (INCHES)				COMPRESSION SPLICES
BAR SIZE	TOP BARS "A"	TOP BARS "B"	OTHER BARS "A"	OTHER BARS "B"	(INCHES)
#3	16	21	12	16	12
#4	21	28	16	21	15
#5	27	35	21	27	19
#6	35	46	27	35	23
#7	48	62	37	48	26
#8	63	82	48	63	30
#9	80	104	61	80	34
#10	101	131	78	101	38
#11	125	162	96	125	42

COMPRESSION DOWEL EMBEDMENT: 22 BAR DIAMETERS. LAP WELDED FABRIC ONE SPACING OF CROSS WIRES PLUS 2 INCHES.

NO.	DATE	DESCRIPTION	NO.	DATE	DESCRIPTION

REVISIONS

DESIGNED BY: M. WIDMANN
DRAWN BY: D. LARSON
CHECKED BY: N/A

URS
2870 Gateway Oaks Drive, Ste. 150
Sacramento, CA 95833-3200
TEL: (916) 679-2000
FAX: (916) 679-2900

REGISTERED PROFESSIONAL ENGINEER M. Khaoul No. S-4087 EXP. 09-30-07 STRUCTURAL STATE OF CALIFORNIA

SOIL REMEDIAL DESIGN
COOPER DRUM COMPANY SUPERFUND SITE
9316 SOUTH ATLANTIC AVE, SOUTH GATE
LOS ANGELES COUNTY , CALIFORNIA 90280

ABBREVIATIONS, GENERAL NOTES,DESIGN CRITERIA FOUNDATION, CONCRETE AND REBAR NOTES

SCALE:	DATE:	DWG. FILE:	SHEET NO:
N.T.S.	8/30/2007	S-3.dwg	S-0

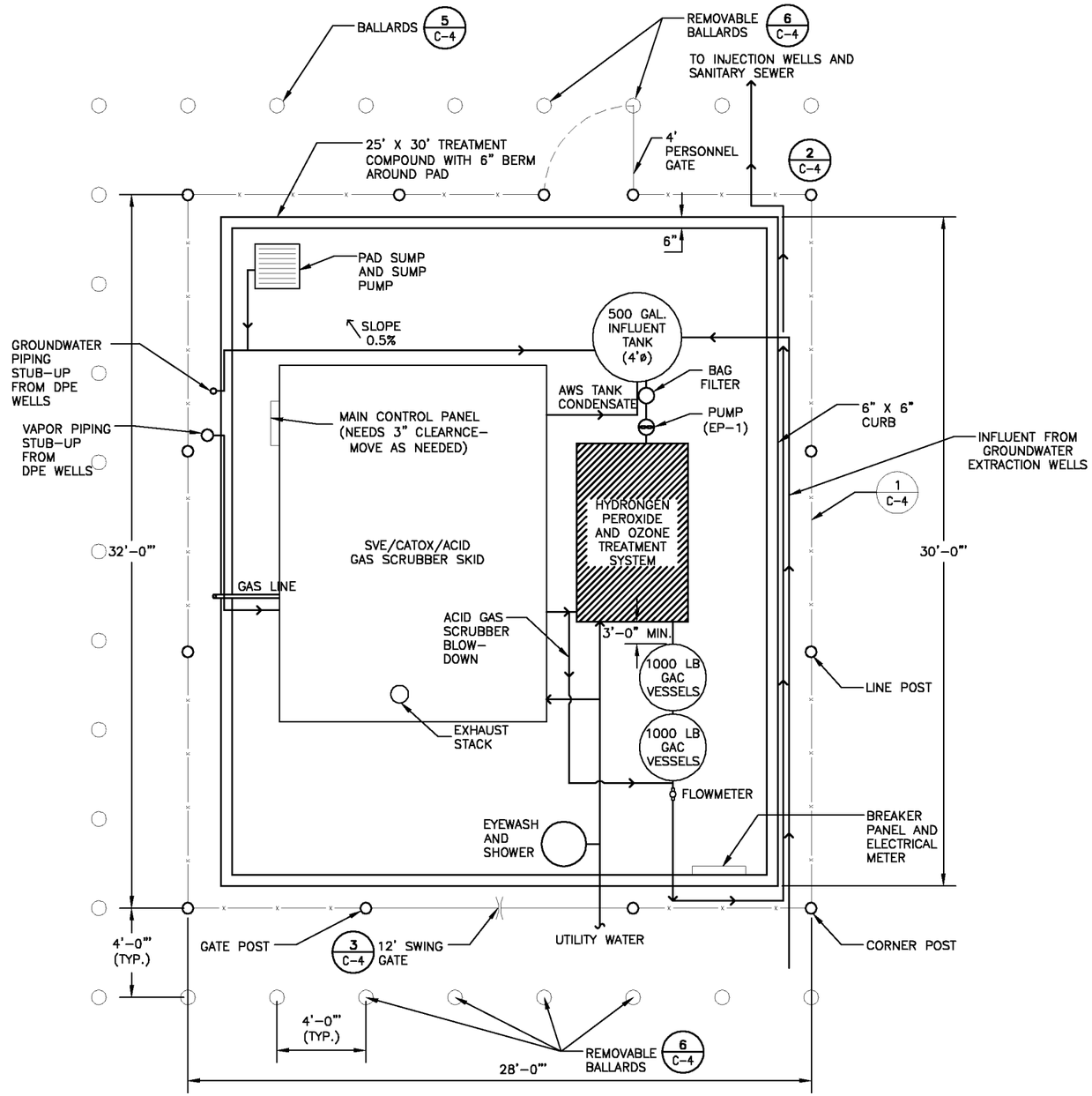

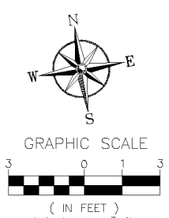

NO.	DATE	DESCRIPTION	NO.	DATE	DESCRIPTION

REVISIONS

DESIGNED BY: M. WIDMANN
DRAWN BY: D. LARSON
CHECKED BY: N/A

URS
2870 Gateway Oaks Drive, Sts. 150
Sacramento, CA 95833-3200
TEL: (916) 679-2000
FAX: (916) 679-2900

REGISTERED PROFESSIONAL ENGINEER M. Kisabuli No. S-4087 EXP. 09-30-07 STRUCTURAL STATE OF CALIFORNIA

SOIL REMEDIAL DESIGN
COOPER DRUM COMPANY SUPERFUND SITE
9316 SOUTH ATLANTIC AVE, SOUTH GATE
LOS ANGELES COUNTY , CALIFORNIA 90280

TREATMENT COMPOUND PLAN

SCALE:	DATE:	DWG. FILE:	SHEET NO.
1"=3'-0"	8/22/2007	S-1.dwg	S-1

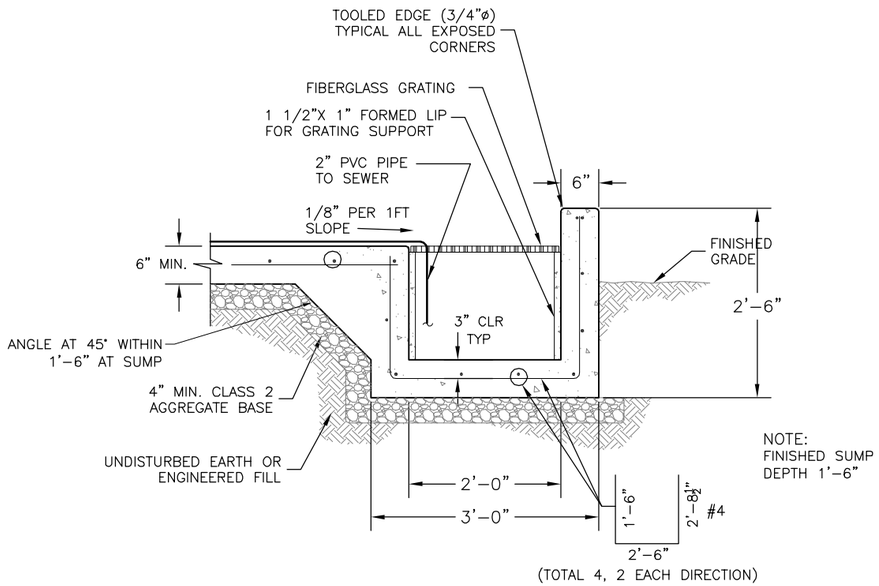

3 S-2 **SUMP DETAIL**
(NOT TO SCALE)

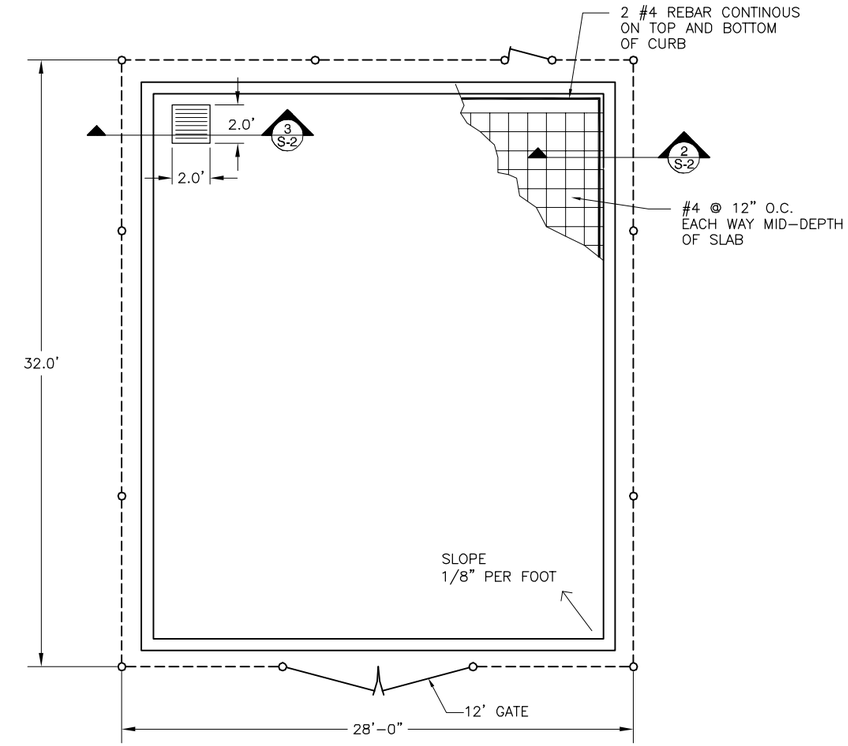

1 S-2 **TREATMENT COMPOUND SLAB (PLAN VIEW)**
(NOT TO SCALE)

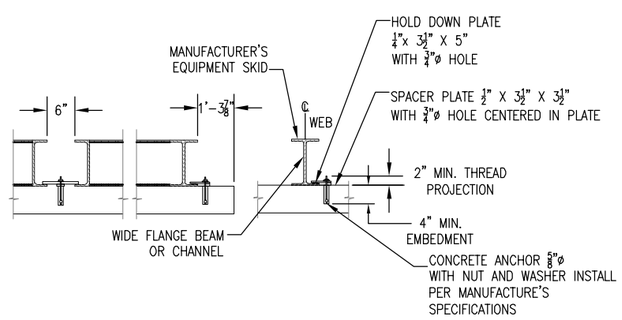

4 S-2 **PROPOSED EQUIPMENT SKID HOLD DOWN PLATE DETAIL**
(NOT TO SCALE)

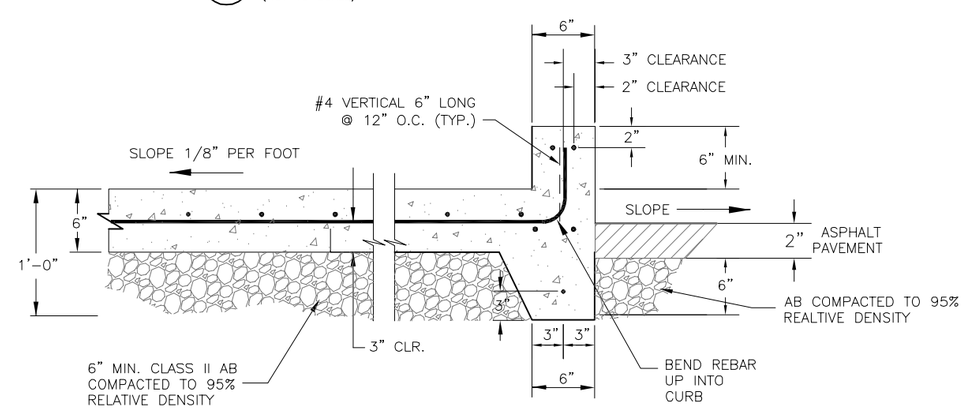

NOTES:

1) USE 2,500 PSI CONCRETE @ 28 DAYS

2 S-2 **FOOTING AND SLAB (CROSS-SECTION)**
(NOT TO SCALE)

NO.	DATE	DESCRIPTION	NO.	DATE	DESCRIPTION

REVISIONS

DESIGNED BY: M. WIDMANN
DRAWN BY: D. LARSON
CHECKED BY: N/A

URS
2870 Gateway Oaks Drive, Ste. 150
Sacramento, CA 95833-3200
TEL: (916) 679-2000
FAX: (916) 679-2900

REGISTERED PROFESSIONAL ENGINEER
M. Kisaoui
No. S-4087
EXP. 09-30-07
STRUCTURAL
STATE OF CALIFORNIA

SOIL REMEDIAL DESIGN
COOPER DRUM COMPANY SUPERFUND SITE
9316 SOUTH ATLANTIC AVE, SOUTH GATE
LOS ANGELES COUNTY , CALIFORNIA 90280

CONCRETE DETAILS

SCALE:	DATE:	DWG. FILE:	SHEET NO.
N.T.S.	8/22/2007	S-2.dwg	S-2

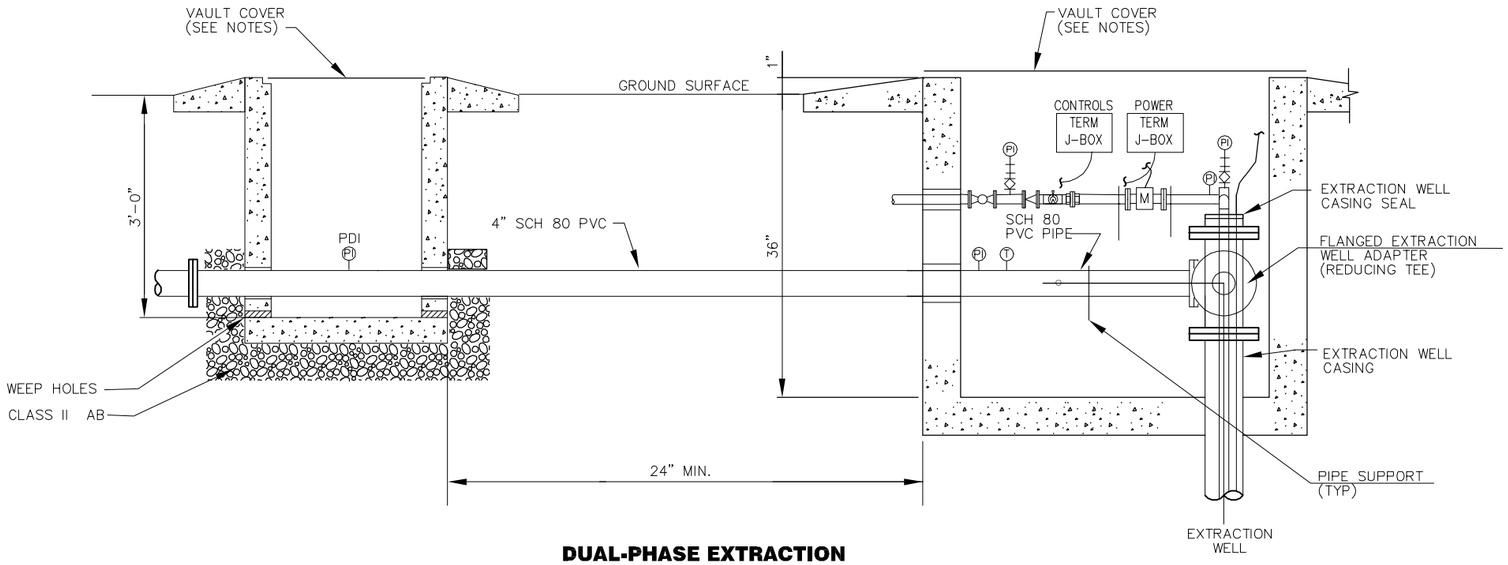

DUAL-PHASE EXTRACTION WELL-HEAD DETAIL (SECTION)

A / M-1 NOT TO SCALE

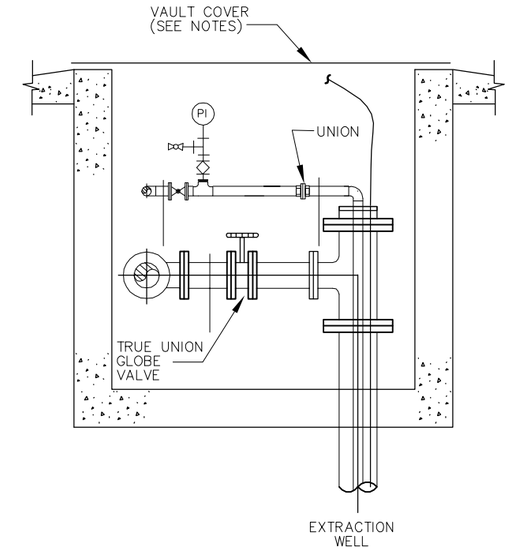

DUAL-PHASE EXTRACTION WELL-HEAD DETAIL (SECTION)

B / M-1 NOT TO SCALE

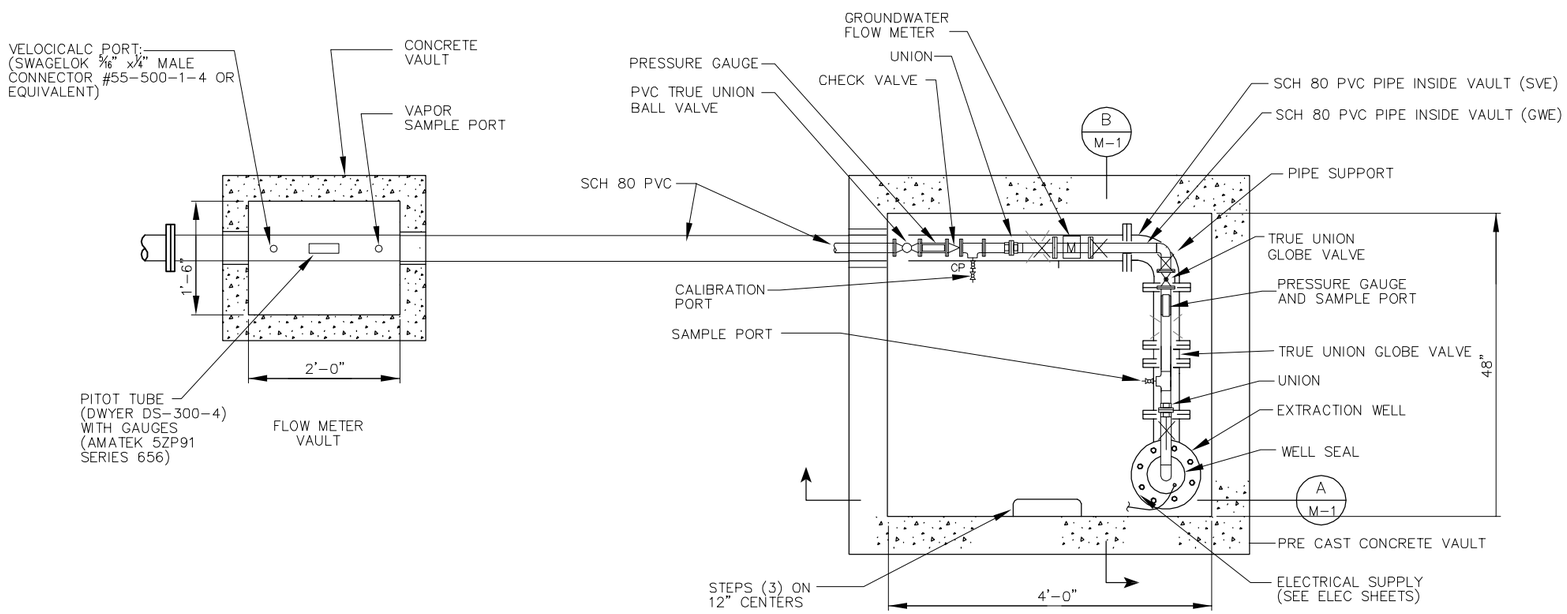

DUAL-PHASE EXTRACTION WELL-HEAD DETAIL (PLAN)

1 / C-1 NOT TO SCALE

NOTES:

1. ALL VAULTS SHALL BE RATED FOR TRAFFIC AND WATER RESISTANT.
2. CONCRETE REQUIREMENTS:
   A. CONCRETE SHALL HAVE A MINIMUM 28 DAY COMPRESSIVE STRENGTH OF 4,000 PSI.
   B. THE VAULT SHALL BE DESIGNED IN ACCORDANCE WITH ACI 318-89 FOR THE FOLLOWING LOADINGS: LATERAL SOIL LOAD – 70 PCF EQUIVALENT FLUID PRESSURE SURCHARGE – 240 PSF
3. SEAL ALL VAULTS PENETRATIONS W/ WATERPROOF CONCRETE GROUTSEAL.
4. PIPE SUPPORTS MAY BE EITHER WALL OR FLOOR MOUNTED.
5. VAULT COVER SHALL BE GALVANIZED STEEL.
6. ALL HARDWARE FOR THE COVER SHALL BE STAINLESS STEEL.
7. COVER SHALL BE TORSION SPRING ASSISTED.
8. VAULT COVER SHALL BE SET FLUSH WITH GROUND SURFACE IN TRAFFIC AREAS OR WHERE OTHERWISE DIRECTED BY ENGINEER.
9. COVERS SHALL BE EQUIPPED WITH A JOINT GUTTER AND A MOAT TYPE EDGE DRAIN.

NO.	DATE	DESCRIPTION	NO.	DATE	DESCRIPTION

REVISIONS

DESIGNED BY: M. WIDMANN
DRAWN BY: D. LARSON
CHECKED BY: N/A

URS
2870 Gateway Oaks Drive, Ste. 150
Sacramento, CA 95833-3200
TEL: (916) 679-2000
FAX: (916) 679-2900

REGISTERED PROFESSIONAL ENGINEER EDMUND D. THATCHER No. 64825 Exp. ____ CIVIL STATE OF CALIFORNIA

SOIL REMEDIAL DESIGN
COOPER DRUM COMPANY SUPERFUND SITE
9316 SOUTH ATLANTIC AVE, SOUTH GATE
LOS ANGELES COUNTY , CALIFORNIA 90280

TYPICAL DPE WELL HEAD DETAILS

SCALE:	DATE:	DWG. FILE:	SHEET NO.
N.T.S.	8/22/2007	M-1.dwg	M-1

GENERAL NOTES:

1. FURNISH AND INSTALL ALL NECESSARY LABOR, MATERIALS, EQUIPMENT AND INCIDENTALS REQUIRED TO INSTALL COMPLETE AND OPERATIONAL ELECTRICAL SYSTEMS ACCORDING TO THE INTENT OF THESE DRAWINGS AND ASSOCIATED SPECIFICATIONS WHETHER ITEMIZED OR NOT.

2. EXAMINE THE DRAWINGS FOR MECHANICAL EQUIPMENT AND PROVIDE STARTERS, CIRCUIT BREAKERS, SWITCHES, PUSHBUTTONS AND APPURTENANCES WHICH ARE NOT SPECIFIED TO BE WITH THE MECHANICAL EQUIPMENT. ERECT ALL ELECTRICAL EQUIPMENT NOT DEFINITELY STATED TO BE ERECTED BY OTHERS, FURNISH AND INSTALL CONDUIT WIRE AND CABLE AND MAKE CONNECTIONS REQUIRED TO PLACE ALL EQUIPMENT IN COMPLETE OPERATION.

3. THE ELECTRICAL CONTRACTOR SHALL HAVE THOROUGHLY EXAMINED THE SITE AND FAMILIARIZED HIMSELF WITH THE EXISTING CONDITIONS, AND SHALL HAVE MADE ALLOWANCE THEREFORE IN PREPARING HIS PROPOSAL . HE SHALL VERIFY EXISTING CONDITIONS, PULLBOXES, ELECTRICAL DISTRIBUTION SYSTEMS AND DEMOLITION REQUIREMENTS PRIOR TO SUBMITTING A BID.

4. IN THE EVENT OF DISCREPENCIES BETWEEN EXISTING CONDITIONS AND THE DRAWINGS, THE ELECTRICAL CONTRACTOR SHALL BID NEW CONDITIONS, WIRES AND NECESSARY EQUIPMENT IN ORDER TO COMPLETE THE JOB AND PROVIDE A FULLY OPERABLE AND AND ACCEPTABLE SYSTEMS. EXTRAS WILL NOT BE ALLOWED FOR WORK NOT INDICATED OR NOTED ON THE DRAWINGS WHEN SUCH WORK IS APPARENT FROM AN INSPECTION OF THE PREMISES AT THAT TIME .

5. THE ELECTRICAL CONTRACTOR SHALL BE RESPONSIBLE FOR MAINTAINING CONTINUITY OF EXISTING ELECTRICAL CIRCUITS BEING USED FOR EXISTING LIGHTING AND RECEPTACLES TO REMAIN WHETHER INDICATED OR NOT. VERIFY USAGE FOR ALL BRANCH CIRCUITS IN EXISTING PANELBOARDS AND ADJUST CIRCUITS AS NECESSARY. DOCUMENT PANEL CIRCUIT DIRECTORIES ON AS BUILT DRAWINGS AND PROVIED TYPE WRITTEN DIRECTORY CARDS FOR ALL PANELBOARDS.

6. ALL MATERIALS USED ON THIS PROJECT SHALL BE LISTED AND BEAR THE LABEL OF UNDERWRITERS LABORTORIES. AND APPROVED FOR ITS INTENDED USE .

7. ELECTRICAL WORK SHALL CONFORM TO THE 2004 CALIFORNIA ELECTRICAL CODE AND COUNTY OF LOS ANGELES CODES.

8. FIRE SEAL AROUND ALL CONDUITS PENETRATIONS THROUGH FIRE BARRIERS WITH AN APPROVED FIRE SEALANT EQUAL TO THE RATING OF THE SURFACE PENETRATED. FIRE SEAL INSIDE OF CONDUIT AFTER CONDUCTOR INSTALLATION .

ABBREVIATIONS:

120V	120 VOLTS
C O	CONDUIT ONLY
C	CONDUIT
CONT	CONTROLS
(E)	EXISTING
EL	EMERGENCY LIGHT
EOL	INDICATES DEVICE w/ END-OF-LINE RESISTOR
FACP	FIRE ALARM CONTROL PANEL
MT	EMPTY CONDUIT WITH PULLSTRING
(N)	NEW
NIES	NOT INCLUDED ELECTRICAL SCOPE
NL	NIGHT LIGHT
PFB	PROVIDE FOR FUTURE BREAKER
(R)	REMOVE
(RE)	RELOCATE EXISTING
UNO	UNLESS NOTED OTHERWISE
WP	WEATHERPROOF

LEGEND:

- FLUORESCENT LIGHT FIXTURE – RECESSED WITH INTEGRAL BATTERY PACK FOR EMERGENCY OPERATION
- 2g FLUORESCENT LIGHT FIXTURE – RECESSED, NUMBER DENOTES CIRCUIT, LETTER DENOTES SWITCH DESIGNATION
- FLUORESCENT HID LIGHT FIXTURE – RECESSED
- HID LIGHT FIXTURE – WALL MOUNTED
- SINGLE POLE TOGGLE SWITCH, @ +46" UNO
- 2 TWO POLE TOGGLE SWITCH, @ +46" UNO
- 3 THREE-WAY TOGGLE SWITCH, @ +46" UNO
- M MOTOR RATED SINGLE POLE SWITCH, @ UNIT UNO
- A FIXTURE TAG: LETTER INDICATES TYPE
- J JUNCTION BOX, SIZE & TYPE AS INDICATED OR AS REQUIRED
- 20 AMP 125V 3W DUPLEX RECEPTACLE, @ +18" UNO
- 20 AMP 125V 3W DUPLEX RECEPTACLE WITH GFCI, ABOVE COUNTER SPLASH
- DEDICATED CIRCUIT RECEPTACLE, 20 AMP 125V 3W DUPLEX, @ +18" UNO
- 20 AMP 125V 3W DOUBLE DUPLEX RECEPTACLE, @ +18" UNO
- NON-FUSED DISCONNECT SWITCH
- CIRCUIT BREAKER DISCONNECT SWITCH
- FUSED DISCONNECT SWITCH, SIZE PER UNIT LABEL
- 1 MOTOR, N.I.E.S. CONNECT AS REQUIRED, NUMBER INDICATES HP
- CONTROL EQUIPMENT. CONNECT AS REQUIRED
- PANELBOARD – SURFACE MOUNTED – SEE SCHEDULE
- TELEPHONE OUTLET, 4" SQ. BOX w/ SINGLE DEVICE RING & PLATE @ +18" UNO
- DATA OUTLET, 4" SQ. BOX w/ SINGLE DEVICE RING & PLATE @ +18" UNO
- CONDUIT CONCEALED IN CEILING OR WALL
- HOMERUN TO RESPECTIVE PANEL OR TERMINAL CABINET – OVERHEAD
- HOMERUN TO RESPECTIVE PANEL OR TERMINAL CABINET – UNDERGROUND
- CONDUIT RISER – UP
- CONDUIT RISER – DOWN

BRANCH CIRCUIT WITHOUT FURTHER DESIGNATION INDICATES A 2 #12 WIRE CIRCUIT AND 1#12 GROUND WIRE. ALL CONDUITS AND RACEWAY MUST HAVE AN INSULATED GROUND WIRE SIZED PER NEC 250.122, CONDUIT SIZE SHALL BE 3/4" UNO.

- UNDERGROUND CONDUIT OU1 RA
- UNDERGROUND CONDUIT OU2 RA

FLAG NOTE SHOWN ON SAME SHEET

- A / E1.0 SECTION DESIGNATION; TOP LETTER INDICATES SECTION, BOTTOM LETTER/NUMBER INDICATES SHEET
- 1 / E1.0 DETAIL DESIGNATION; TOP NUMBER INDICATES DETAIL, BOTTOM LETTER/NUMBER INDICATES SHEET
- MECHANICAL & PLUMBING EQUIPMENT DESIGNATION
- LINE VOLTAGE THERMOSTAT, NIES, INSTALL & CONNECT AS REQUIRED
- TV TELEVISION OUTLET
- EC EMERGENCY CALL OUTLET
- P PUBLIC TELEPHONE OUTLET
- SPECIAL OUTLET. SEE PLANS FOR SPECIFICATION
- SEALING FITTING WITH SEALING COMPOUND FOR CLASS 1, DIV. 1

NOTE: SYMBOLS INDICATED ABOVE MAY NOT NECESSARILY APPEAR AS PART OF THESE DRAWINGS IF NOT REQUIRED.

NO.	DATE	DESCRIPTION	NO.	DATE	DESCRIPTION

REVISIONS

DESIGNED BY: M. WIDMANN
DRAWN BY: D. LARSON
CHECKED BY: N/A

URS
2870 Gateway Oaks Drive, Ste. 150
Sacramento, CA 95833-3200
TEL: (916) 679-2000
FAX: (916) 679-2900

REGISTERED PROFESSIONAL ENGINEER – HENRY FELIX QUINTANO – No. E14642 – Exp. 12-31-06 – ELECTRICAL – STATE OF CALIFORNIA

SOIL REMEDIAL DESIGN
COOPER DRUM COMPANY SUPERFUND SITE
9316 SOUTH ATLANTIC AVE, SOUTH GATE
LOS ANGELES COUNTY , CALIFORNIA 90280

ELECTRICAL GENERAL NOTES AND SYMBOLS

SCALE:	DATE:	DWG. FILE:	SHEET NO:
N.T.S.	8/22/2007	E-1.dwg	E-1

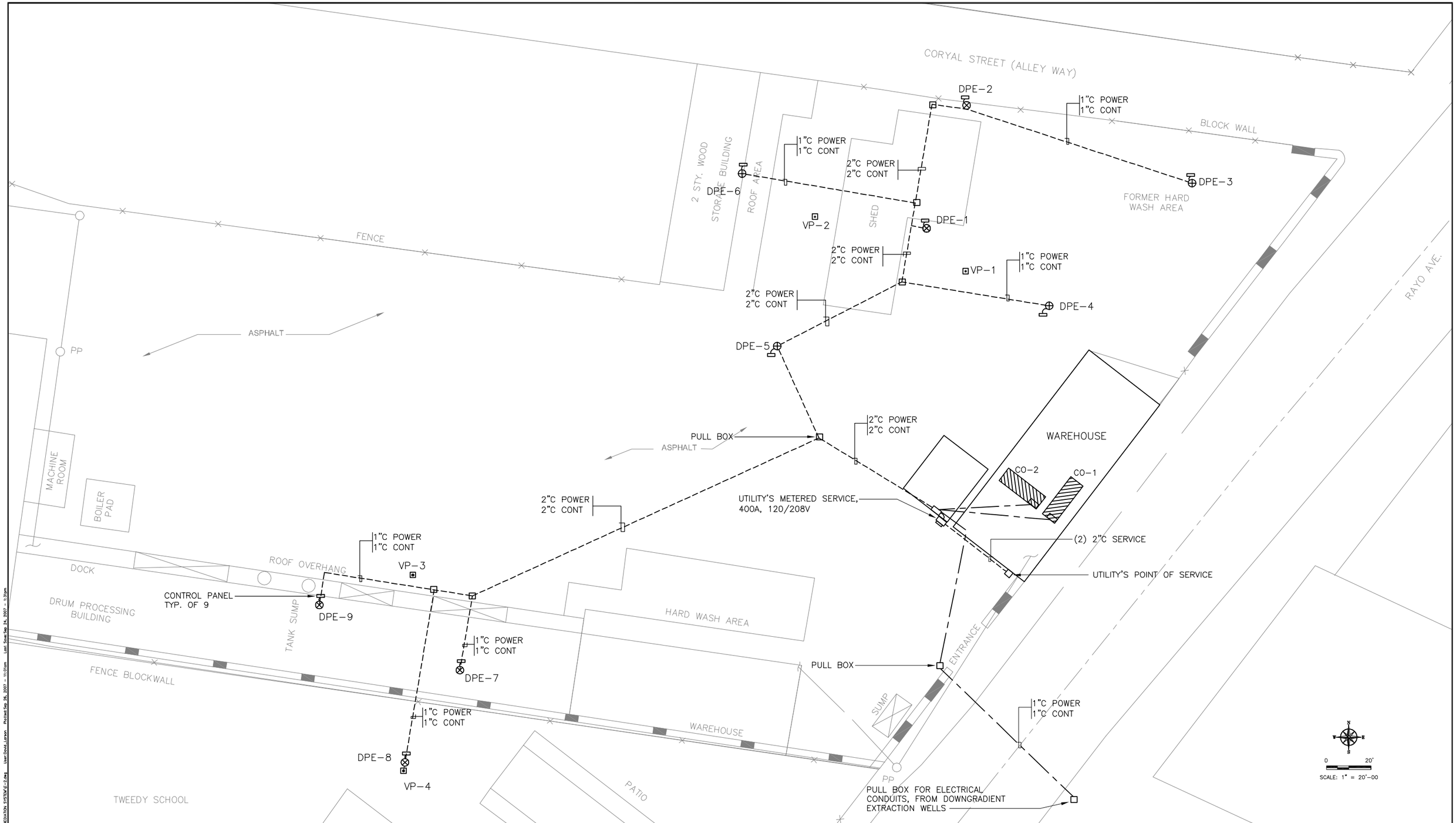

NO.	DATE	DESCRIPTION	NO.	DATE	DESCRIPTION

REVISIONS

DESIGNED BY: M. WIDMANN
DRAWN BY: D. LARSON
CHECKED BY: N/A

URS
2870 Gateway Oaks Drive, Ste. 150
Sacramento, CA 95833-3200
TEL: (916) 679-2000
FAX: (916) 679-2900

REGISTERED PROFESSIONAL ENGINEER HENRY FELIX ODUENKO No. E14642 Exp. 12-31-06 ELECTRICAL STATE OF CALIFORNIA

SOIL REMEDIAL DESIGN
COOPER DRUM COMPANY SUPERFUND SITE
9316 SOUTH ATLANTIC AVE, SOUTH GATE
LOS ANGELES COUNTY , CALIFORNIA 90280

ELECTRICAL SITE PLAN

SCALE:	DATE:	DWG. FILE:	SHEET NO:
1"=20'-0"	8/22/2007	E-2.dwg	E-2

FEEDER SCHEDULE

400B	(2) 2"C – 4#3/0 EACH (UTILITY SERVICE)
400A	(2) 2"C – 4#3/0 & 1#2G EACH
90A	1 1/2"C – 4#3 & 1#8G
50A	1"C – 4#6 & 1#8G
20B	1"C 2#10 & 1#10G

KEYED NOTES

1. UTILITY'S PAD MOUNTED TRANSFORMER
2. 400A, 208/120V, 3 PHASE, 4 WIRE, METER SOCKET AND MAIN PER UTILITY REQUIREMENTS
3. PANEL LA, 400A. 208/120V, 3PHASE, 22 KAISC
4. 3/4" X 10' COPPER CLAD GROUND ROD.

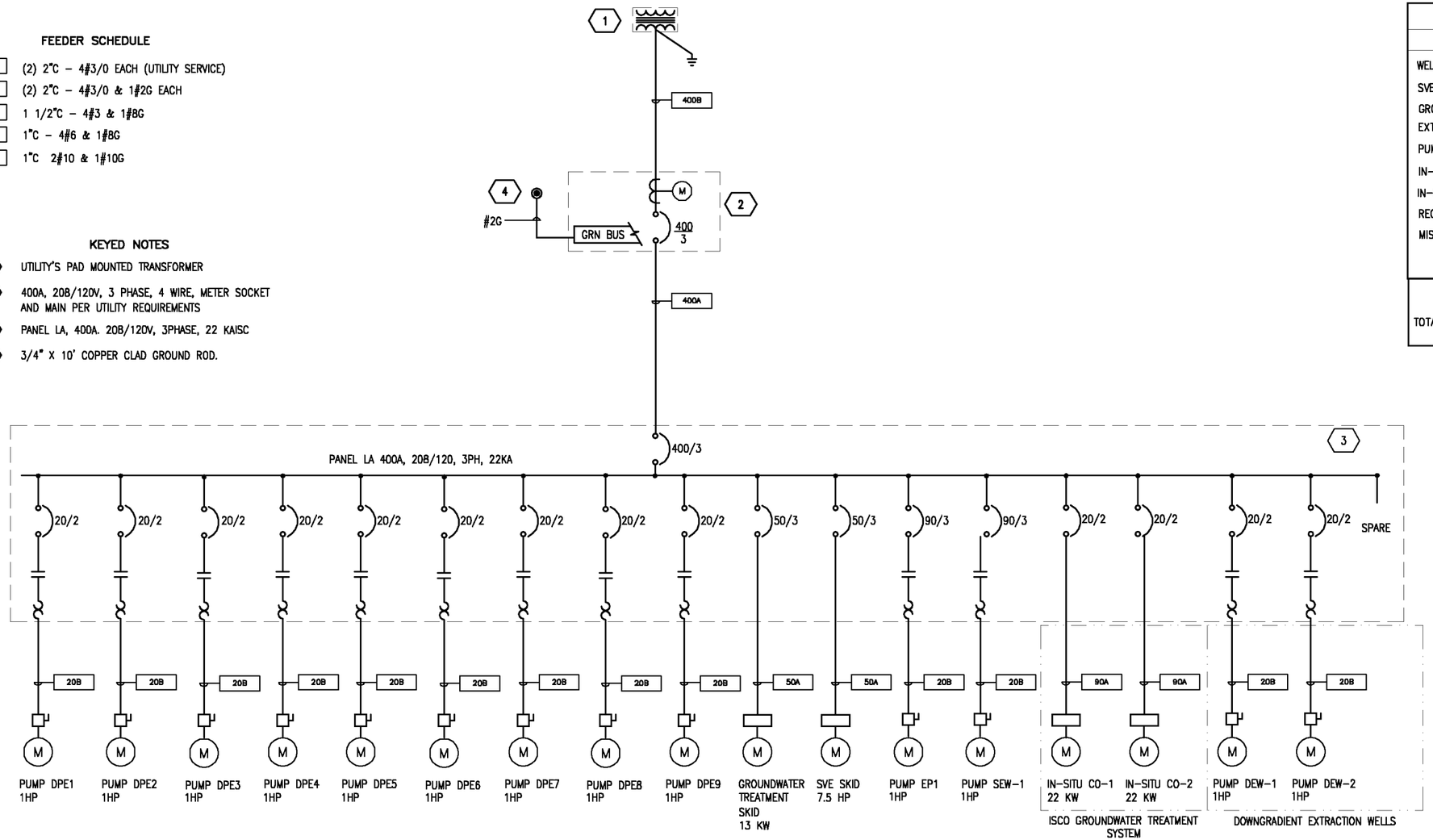

LOAD SUMMARY

EQUIPMENT	RATING	LOAD
WELL SUMP PUMP DPE-1 TO DPE-9	(9) 2 HP	18,000 VA
SVE SKID	7 1/2 HP	7,500 VA
GROUNDWATER TREATMENT SKID	13 KW	13,000 VA
EXTRACTION PUMPS	(2) 2 HP	4,000 VA
PUMP DEW-1 AND DEW-2	(2) 2 HP	4,000 VA
IN-SITU CHEM. OXIDATION 1	22 KW	22,000 VA
IN-SITU CHEM. OXIDATION 2	22 KW	22,000 VA
RECEPTACLES	.2 KW	200 VA
MISCELLANEOUS	.2 KW	400 VA
TOTAL		91,100 VA
TOTAL AMPS AT 208V, 3PH		253 AMPS

PANEL "LA" SCHEDULE

POWER SOURCE: SERVICE — LOCATION: ELECT RM — 208

TYPE: POWRLINE — BUS: 400A — MAIN 400A — VOLTAGE: 208Y/120 VOLT, 3 PHASE, 4 WIRES — MOUNTING: SURFACE — REMARKS: 22k AIC MIN. SYMM

LOAD SERVED	kvA	CB	CT	PHASE	CT	CB	kvA	LOAD SERVED
SUB PUMP DPE-1	0.9	20/2	1	A	2	50/3	3.1	SVE SKID
	0.9		3	B	4		3.1	
SUB PUMP DPE-2	0.9	20/2	5	C	6		3.1	
	0.9		7	A	8	50/3	4.4	HCU SKID
SUB PUMP DPE-3	0.9	20/2	9	B	10		4.4	
	0.9		11	C	12		4.4	
SUB PUMP DPE-4	0.9	20/2	13	A	14	20/1	0.9	DEW-2
	0.9		15	B	16	20/1	0.9	
SUB PUMP DPE-5	0.9	20/2	17	C	18	20/1		SPARE
	0.9		19	A	20	20/2	0.9	PUMP EPE-1
SUB PUMP DPE-6	0.9	20/2	21	B	22		0.9	
	0.9		23	C	24	20/2	0.9	PUMP SEW-1
SUB PUMP DPE-7	0.9	20/2	25	A	26		0.9	
	0.9		27	B	28	20/2	0.9	PUMP DEW-2
SUB PUMP DPE-8	0.9	20/2	29	C	30		0.9	
	0.9		31	A	32	90/3	7.3	IN-SITU CO-1
SUB PUMP DPE-9	0.9	20/2	33	B	34		7.3	
	0.9		35	C	36		7.3	
RECEP.	0.2	20/1	37	A	38	90/3	7.3	IN-SITU CO-2
MISC.	0.2	20/1	39	B	40		7.3	
SCADA	0.2	20/1	41	C	42		7.3	

NOTE(S):

PHASE A=	30.4	kvA
PHASE B=	30.4	kvA
PHASE C=	29.5	kvA
TOTAL =	90.3	kvA
TOTAL =	250.8	Amperes

SINGLE LINE DIAGRAM

NO.	DATE	DESCRIPTION	NO.	DATE	DESCRIPTION

REVISIONS

DESIGNED BY: M. WIDMANN
DRAWN BY: D. LARSON
CHECKED BY: N/A

URS
2870 Gatsway Oaks Drive, Ste. 150
Sacramento, CA 95833-3200
TEL: (916) 679-2000
FAX: (916) 679-2900

REGISTERED PROFESSIONAL ENGINEER HENRY FELIX CONFORTO No. E14642 Exp. 12-31-06 ELECTRICAL STATE OF CALIFORNIA

SOIL REMEDIAL DESIGN
COOPER DRUM COMPANY SUPERFUND SITE
9316 SOUTH ATLANTIC AVE, SOUTH GATE
LOS ANGELES COUNTY , CALIFORNIA 90280

SINGLE LINE DIAGRAM

SCALE:	DATE:	DWG. FILE:	SHEET NO.
N.T.S.	8/22/2007	E-3.dwg	E-3

Cost Estimate Summary For The Selected Remedy For Soil	
Description	**Cost**
Capital Costs	
Excavation	
Mobilization and Demobilization	$31,961
Excavation and Hauling	$842,785
Confirmation Sampling (Excavation)	$45,500
Dual Phase Extraction	
Permitting	$131,320
Remediation Equipment	$506,889
Treatment Compound Slab	$22,368
Treatment Compound Fence and Bollards	$23,250
Extraction Well Install and Monitoring	$146,630
Treatment Trenching and Piping	$54,914
Wellheads and Equipment Install	$150,777
Initial Startup Test	$8,519
Subtotal (construction)	$1,964,913
Bid contingencies(5% of total)	$98,246
Report preparation (RAWP, HASP, Plans, Final O&M)(5% of total)	$98,246
Field and laboratory testing during construction (1% of total)	$19,649
Reporting during construction (1% of total)	$19,649
Total Capital Cost	**$2,200,703**
OPERATIONS AND MAINTENANCE COSTS	`
O&M labor	$40,800
SVE treatment system Sampling	$13,880
O&M material	$9,120
Electrical Utility	$72,883
O&M Analytical	$71,520
O&M Source Testing	$16,510
O&M Reporting	$38,272
Subtotal O&M (Annual Cost)	$262,985
Subtotal O&M (discounted)[a]	**$749,264**
Closure Plans and Sampling [b]	**$86,702**
TOTAL PRESENT VALUE	**$3,036,669**

Date: September 18, 2007

Note: Inflation rates for 2007 through 2009 (As provided in the ROD) was factored into the 7% discount

[a] A 7% discount assumed for 3 years of O&M operation

[b] Closure sampling is assumed to occur in 2010

Cooper Drum
9316 South Atlantic Avenue, South Gate, CA
DUAL PHASE EXTRACTION

Description	Qty	Unit	$/unit	Ext. Cost
Permitting				
Labor:				
PM/Engineer - Senior	40	hr	$ 100.00	$4,000
Engineer - Senior	20	hr	$ 100.00	$2,000
Scientist - Sr	5	hr	$ 100.00	$500
Engineer - Staff	40	hr	$ 75.00	$3,000
Scientist - Staff	40	hr	$ 75.00	$3,000
Procurement	20	hr	$ 60.00	$1,200
Subtotal				$13,700
Permits:				
South Coast AQMD	1	LS	$2,682	$2,682
Utility Costs	24	mo	$3,500	$84,000
Electrical	1	LS	$10,000	$10,000
Natural Gas	1	LS	$5,000	$5,000
Sewer	1	LS	$2,000	$2,000
Bldg. & Planning Dept Permit	1	LS	$2,000	$2,000
Subtotal				$105,682
SUBTOTAL				$119,382
CONTINGENCY (10%)				$11,938
Subtotal				**$131,320**
Remediation Equipment				
Skid Mounted 2 Phase System	1	LS	$274,808	$274,808
See attached estimate				
Hipox Unit and Consumables	1	24 Mo.	$186,000	$186,000
SUBTOTAL				$460,808
CONTINGENCY (10%)				$46,081
Subtotal				**$506,889**
Treatment Compound Slab				
Labor:				
PM/Engineer - Senior	4	hr	$ 110.00	$440
Super/Field Tech - Senior	60	hr	$ 75.00	$4,500
Laborer/Field Tech	60	hr	$ 50.00	$3,000
Laborer/Field Tech	40	hr	$ 50.00	$2,000
Laborer/Field Tech	10	hr	$ 45.00	$450
Laborer/Field Tech	10	hr	$ 45.00	$450
Subtotal				$10,840
Equipment:				
Backhoe	1	week	$ 646.50	$647
Backhoe				$91
Wacker	2	day	$ 48.49	$97
Vibrator	1	day	$ 50.00	$50
Laser	1	each	$ 100.00	$100
Service Truck	2	week	$ 290.00	$580
Service Truck	1	day	$ 73.00	$73
FOGM	6	day	$ 100.00	$600
Misc Tools	1	each	$ 100.00	$100
OVA/PID	1	each	$ 100.00	$100
Subtotal				$2,437
Materials:				
Class II AB	38	ton	$ 24.25	$922
Rebar	1	each	$ 750.00	$750
Concrete	28	cy	$ 112.00	$3,136
Form wood/dobies	1	each	$ 750.00	$750
Visqueen plastic	1	each	$ 150.00	$150
Subtotal				$5,708
Subcontractors:				
A/C and Clean Soil Off-haul	3	load	$ 100.00	$300
A/C and Clean Soil Disposal	3	load	$ 100.00	$300
Temp Fence	1	each	$ 350.00	$350
Utility Locator	1	each	$ 400.00	$400
Subtotal				$1,350
COST SUBTOTAL				$20,334
CONTINGENCY (10%)				$2,033
Subtotal				**$22,368**

Cooper Drum
9316 South Atlantic Avenue, South Gate, CA
DUAL PHASE EXTRACTION

Description	Qty	Unit	$/unit	Ext. Cost
Treatment Compound Fence and Bollard				
Fence	1	LS	$10,000	$10,000
Bollard	1	LS	$13,000	$12,250
COST SUBTOTAL				$22,250
CONTINGENCY (10%)				$1,000
Subtotal				**$23,250**
Extraction well install				
Extraction wells	880	LS	$100	$88,000
Extraction wells labor	150	LS	$90	$12,250
Monitoring wells	416	LS	$50	$20,800
Monitoring wells labor	75	LS	$13,000	$12,250
COST SUBTOTAL				$133,300
CONTINGENCY (10%)				$13,330.0
Subtotal				**$146,630**
Trenching, UG Piping Installation				
Labor:				
PM/Engineer - Senior	20	hr	$110	$2,200
Super/Field Tech - Senior	90	hr	$75	$6,750
Laborer/Field Tech	90	hr	$50	$4,500
Laborer/Field Tech	90	hr	$50	$4,500
Procurement	8	hr	$60	$480
Subtotal				$18,430
Equipment:				
Backhoe	2	weeks	$ 646.50	$1,293
				$181
Wacker	2	weeks	$ 134.69	$269
Vibratory Plate	2	weeks	$ 134.69	$269
Trench Plates	2	weeks	$ 88.62	$177
Trench Plate Mob/Demob	4	hour	$ 45.00	$180
Equipment Mob/Demob	4	each	$ 50.00	$200
Speed Shoring	1	each	$ 200.00	$200
Service Truck	16	day	$ 75.00	$1,200
FOGM	16	day	$ 100.00	$1,600
Subtotal				$5,570
Materials:				
Primer & Glue	6	each	$ 65.00	$390
Sand Bedding	90	ton	$ 22.00	$1,980
Class II AB	30	ton	$ 24.25	$728
Magnetic Warning Tape	1000	lf	$ 0.50	$500
2-in sch 80 PVC (GW)	1000	lf	$ 4.08	$4,080
4-in sch 80 PVC (SVE)	500	lf	$ 9.11	$4,555
6-in sch 80 PVC (SVE)	500	lf	$ 17.39	$8,695
1-in Electrical conduit	1000	lf	$ 1.32	$1,320
Sales Tax				$1,724
Subtotal				$23,972
Subcontractors:				
Temp Fence	1	each	$ 350.00	$350
Clean Soil Off-haul	8	load	$ 100.00	$800
Clean Soil Disposal	8	load	$ 100.00	$800
Subtotal				$1,950
COST SUBTOTAL				$49,922
CONTINGENCY (10%)				$4,992
Subtotal				**$54,914**

Cooper Drum
9316 South Atlantic Avenue, South Gate, CA
DUAL PHASE EXTRACTION

Description	Qty	Unit	$/unit	Ext. Cost
Wellheads and Equipment Placement at Pad				
Labor:				
PM/Engineer - Senior	5	hr	$110	$550
Super/Field Tech - Senior	80	hr	$75	$6,000
Laborer/Field Tech	80	hr	$50	$4,000
Laborer/Field Tech	80	hr	$50	$4,000
Subtotal				$14,550
Equipment:				
Fork Lift	2	days	$ 312.48	$625
Service Truck	2	weeks	$ 290.00	$580
FOGM	10	day	$ 100.00	$1,000
Subtotal				$2,205
Materials:				
Miscellaneous	1	LS	$ 1,000.00	$1,000
Grundfos pumps	9	each	$1,035	$9,315
Well Vault	9	each	$2,500	$22,500
Well Vault Components (piping, controls, gauges)	9	each	$2,500	$22,500
Monitoring Well Vault	13	each	$2,500	$32,500
Monitoring Well Vault (piping, controls, gauges)	13	each	$2,500	$32,500
Subtotal				$137,070
CONTINGENCY (10%)				$13,707
Subtotal				**$150,777**
STARTUP - 3 day Shakedown				
Labor:				
PM/Engineer - Senior	15	hr	$110	$1,650
Super/Field Tech - Senior	30	hr	$75	$2,250
Super/Field Tech - Senior	30	hr	$76	$2,280
Subtotal				$6,180
Equipment:				
Service Truck	3	day	$ 75.00	$225
FOGM	3	day	$ 100.00	$300
Subtotal				$525
Utilities:				
Electricity	2,400	kwh	$0.14	$336
Natural Gas	300	therm	$0.72	$216
Sewer	86	Kgal	$5.64	$487
Subtotal				$1,039
SUBTOTAL				$7,744
CONTINGENCY (10%)				$774
Subtotal				**$8,519**
TOTAL				**$1,044,666**

Remediation Equipment Costs

Company	Description of Equipment	Cost ($)	Comments
Applied	Hipox Rental 2 years	108,000.00	
Applied	Freight in and out	5,000.00	
Applied	isntallation/start up	6,000.00	
Applied	demobe	1,000.00	
Applied	preventative maintenance	12,000.00	
Applied	electricity (8,000 kw/month)	19,200.00	
Applied	peroxide (35%) 2.3 gal/day	8,400.00	
Applied	liquid oxygen	26,400.00	
	Subtotal	**186,000.00**	
Baker Furnace	Thermal Oxidizer/Scrubber	250,000.00	
	Tax (7.75%)	19,375.00	
	Freight	1,000.00	
	Subtotal for Oxidizer Only	**270,375.00**	
Soil Therm	Oxidizer/Scrubber	168,900.00	
Soil Therm	Heat Exchanger	18,000.00	
	Tax (7.75%)	1,395.00	
	Freight	1,000.00	
	Subtotal for Oxidizer Only	**189,295.00**	
Baker Furnace	Scrubber sump	21,145.00	
Baker Furnace	9 grundfos pumps	9,315.00	
Baker Furnace	2 1,000 lb GAC vessels	9,600.00	
Baker Furnace	500 Gallon Poly Tank	750.00	
	Tax (7.75%)	3,162.78	
	Freight	1,000.00	
	Subtotal for Addtional Components	**44,972.78**	
	Total for System (no Hipox)	**274,807.78**	

Average price for Oxidizer and Baker Components

Cooper Drum
9316 South Atlantic Avenue, South Gate, CA
EXCAVATION

Description	Qty	Unit	$/unit	Ext. Cost
MOBILIZATION/DEMOBILIZATION				
HASP Preparation				
Labor:				
PM/Sr.Geologist - Senior	40	hr	$ 100.00	$4,000
Geo/Engineer - Senior	20	hr	$ 100.00	$2,000
CIH	20	hr	$ 100.00	$2,000
Engineer - Staff	40	hr	$ 75.00	$3,000
Scientist - Staff	40	hr	$ 75.00	$3,000
Subtotal				$14,000
Permitting				
Labor:				
PM/Engineer - Senior	5	hr	$ 100.00	$500
Engineer - Staff	10	hr	$ 75.00	$750
Scientist - Staff	10	hr	$ 75.00	$750
Permits:				
Bldg. & Planning Dept Permit	1	LS	$ 2,000.00	$2,000
Subtotal				$4,000
Site Setup and Close				
Labor:				
PM/Engineer - Senior	10	hr	$ 100.00	$1,000
Engineer - Staff	20	hr	$ 75.00	$1,500
Laborer/Field Tech	80	hr	$ 60.00	$4,800
Procurement	8	hr	$ 60.00	$480
Equipment:				
Service Truck	5	day	$ 75.00	$375
FOGM	5	day	$ 100.00	$500
ODCs:				
Airline Ticket (Roundtrip)	3	ea	$ 300.00	$900
Hotel Room	10	night	$ 150.00	$1,500
Subtotal				$11,055
SUBTOTAL				$29,055
CONTINGENCY (10%)				$2,906
Subtotal				**$31,961**
EXCAVATION				
Labor:				
PM - Senior	15	hr	$ 110.00	$1,650
Super/Field Tech - Senior	160	hr	$ 75.00	$12,000
Super/Field Tech - Senior	40	hr	$ 112.50	$4,500
Laborer/Field Tech	160	hr	$ 50.00	$8,000
Laborer/Field Tech	40	hr	$ 75.00	$3,000
Laborer/Field Tech	160	hr	$ 50.00	$8,000
Laborer/Field Tech	40	hr	$ 75.00	$3,000
Chemist	39	hr	$ 90.00	$3,510
Subtotal				$43,660
ODCs:				
Airline Ticket (Roundtrip)	45	ea	$ 300.00	$13,500
Hotel Room	60	night	$ 150.00	$9,000
Car Rental	15	wk	$ 250.00	$3,750
Field Trailer	1.25	mo	$ 350.00	$438
Subtotal				$26,688

Cooper Drum
9316 South Atlantic Avenue, South Gate, CA
EXCAVATION

Description	Qty	Unit	$/unit	Ext. Cost
Analytical:				
Field Test Kit - PCB	65	ea	$ 30.00	$1,950
Field Test Kit - PAH	65	ea	$ 100.00	$6,500
Field Test Kit - Lead	65	ea	$ 100.00	$6,500
Field Test - Lead XRF	1	mo	$ 750.00	$750
Lead (6010 B)	13	ea	$ 150.00	$1,950
PCBs (8082)	13	ea	$ 420.00	$5,460
PAHs (8310)	13	ea	$ 195.00	$2,535
Waste Characterization Sampling	9	ea	$ 150.00	$1,350
Subtotal				$26,995
Unit Costs for Excavation Activities:				
Removal of Excavated Soil	1,271	cy	$ 20.00	$25,420
Removal of Excavated Soil - Contingency (30%)	381	cy	$ 20.00	$7,626
Demolish Asphalt in Excavated Areas	175	cy	$ 70.00	$12,250
Loading and Hauling of Asphalt Material	228	tons	$ 60.00	$13,650
Asphalt Patching of Excavated Area	9,575	sf	$ 5.00	$47,875
Disposal of Asphalt	228	tons	$ 15.00	$3,413
Transportation of Contaminated Soil to Class I Landfill	1,652	tons	$ 215.00	$355,245
Shoring	460	lf	$ 15.00	$6,900
Utility Clearance	1	LS	$ 1,000.00	$1,000
Import Clean Fill and Backfill	1,271	cy	$ 56.00	$71,176
Compaction Testing	16	ea	$ 400.00	$6,400
Subtotal				$550,954
COST SUBTOTAL				$648,297
CONTINGENCY (30%)				$194,489
Subtotal				**$842,785**

Assumptions

Excavation:

Estimated excavated volume of contaminated soil: 1270 yd^3 (Assumes no additional soil to be excavated).

DPA West - 395 yd^3
DPA East - 370 yd^3
HWA West - 110 yd^3
HWA East - 280 yd^3
Soil Expansion (10%) - 116 yd^3

Project Duration - 5 weeks (20, 10-hr work days)

Transportation of Material

Asphalt material:

Asphalt to be disposed at local landfill (assumed one way distance = 50 miles).

Contaminated Soil:

Assume 1,270 yd^3 (approximately 1650 tons) to be transported to Class I landfill (Buttonwillow, CA).
Costs include loading, hauling, and disposal fees.
Mass of Soil = 1.3 tons/yd^3

Project Staffing:

Onsite Personnel: 3 full time personnel (48 hours/week, including travel).
Project Chemist: Assume 0.2 hours/sample for project setup, lab coordination, QA/QC of data.
Project Management Oversight: 3 hour/week.

Contractor Travel:

3 personnel onsite for full duration of project.
Per Diem of $130/day = 60 days total.
Weekly Travel from SMF to LAX (3 trips per person = 12 total).
Car rental during duration of project.

Other:

Access to site utilities for field trailer and bathroom.

Cooper Drum
9316 South Atlantic Avenue, South Gate, CA
EXCAVATION - CONFIRMATION SAMPLING

Initial Sampling:

Site Location	Excavation Wall Lengths (ft)		Excavation Perimeter Area (ft^2)	Initial Sampling Effort PAH	Lead	PCB	Initial Confirmation Sampling Totals	2nd Round Sampling Effort PAH	Lead	PCB	Second Round Confirmation Sampling Totals
DPA West	65	60	3900	16	16	16	48	8	8	8	24
DPA East	80	25	2000	11	11	11	33	1	1	1	3
HWA West	30	40	1200	8	8	8	24	1	1	1	3
HWA East	60	50	3000	13	13	13	39	7	7	7	21
Totals				48	48	48	144	17	17	17	51

	PAH	Lead	PCB	
Totals:	65	65	65	
Sample Costs	$195.00	$420.00	$85.00	
Ext. Costs	$12,675	$27,300	$5,525	
Total Cost:				**$45,500**

Confirmation Samples collected every 40 ft on the sidewalls, below the zone of contamination and on 20 ft centers on the excavation floor

Assume 50% of samples will be "hot" in uncharacterized areas (DPA West and HWA East) and resampling will be required.
Assume 10% of samples will be "hot" in characterized areas (DPA East and HWA West) and resampling will be required.

O&M - 3 years

Assumptions:
O&M period will be for 3 years
O&M Contractor will provide materials, equipment and labor to operate and maintain soils remedy.
Costs do not include treatment system installation.
Project staff will conduct preventative maintenance and repairs for the systems and related equipment. This includes all vapor pipelines and utility pipelines that are not utility-owned and maintained. Utility marking for USA dig clearances will also be included in the project.
The project engineer will troubleshoot problems with the system operators, perform RPO analysis, and analyze operations data.

General Support - URS will provide a technician to assist system operators with procurement, supply errands spare parts inventory, vehicle maintenance, and field financial tracking.
The project manager will be responsible for providing direction to field staff, resolving technical problems, communicating with the client and engineering staff. 1 hour weekly meetings will be conducted with field staff. Weekly URS internal management meetings will also be conducted with the project management team
Engineering support will assist operators with process problems, optimization, and resolution of technical issues.
Maintain property inventory, prepare yearly property report, conduct inventory audits.

O&M General Support

Role	Rate	Hrs/month	# of Months	Total
Technician	$50.00	8	36	$1,800
Field Engineer	$75.00	8	36	$2,700
Project Manager	$100.00	20	36	$3,600
Procurement	$60.00	6	36	$2,160
Property Administration	$60.00	0.5	36	$2,160
Subtotal		42.5		$12,420

Health and Safety - O&M Contractor will conduct 4 quarterly audits with written findings and recommended corrective actions.
H&S staff will also be asked to review and assist with routine and non-routine operations throughout the year.

Health & Safety

Role	Rate	Hrs/event	# of Events	Total
H&S Officer - 4 events/year	$100.00	16	12	$1,200
H&S Officer - 12 events/year	$100.00	8	36	$3,600
H&S Technician	$60.00	8	36	$2,160
Subtotal		16		$6,960

QA Audits - O&M Contractor will conduct quarterly QA audits on standard operating procedures.
Findings and corrective actions will be documented in the quarterly report.

QA Audits

Role	Rate	Hrs	# of Events	Total
QA Manager - 4 events	$100.00	6	4	$2,400
Field Engineer	$75.00	6	6	$2,700
Chemist	$90.00	12	4	$4,320
Subtotal		24		$9,420

DPE System
10 hours per week for routine operations and maintenance - includes 1 using SCADA to collect readings and inspect operation of system. Routine maintenance includes - oil changes, cleaning of the site, performance of semiannual system interlock checks, quarterly blower and pump vibration testing, calibration/replacement of pH probes, cleanout and acid washing of scrubber, replacement/repair of malfunctioning instrumentation, inspection/replacement of blower belt, and draining of low point drains.

2 hours per week of nonroutine repairs, restarts, troubleshooting

Role	Rate	Hrs	# of Weeks	Total
Field Technician	$50.00	12	156	$93,600
Subtotal 3 year				$122,400
Total Annual				$40,800

Task 4 RAO Non-Labor Items

Materials/Supplies	Rate Frequency	Quantity	Cost/Item	Total	Justification
Supplies / Expenses					
Cellular Phone(1000 minute plans)	Each	12	$56.91	$682.92	12 months
System Phone Lines	Phone/Month	12	$44.71	$536.52	Jan 07 - AT&T
Fed Ex (50lb) Standard Overnight	Each	24	$43.45	$1,042.80	2 per month
1 Liter Amber Glass (QC Class)	Case (12)	1	$32.00	$32.00	.5 per month
8 oz glass jars	Case(12)	1	$19.20	$19.20	.5 per month
1 Liter Wide Mouth (poly)	Case (24)	1	$49.09	$49.09	.5 per month
40ml Voa Vials w/0.5hcl (amber, QC Class)	Case (72)	1	$116.90	$116.90	.5 per month
Acid - Muriatic	Gallon	1	$12.00	$12.00	2 per month
Additional Field Supplies	Each	1	$500.00	$500.00	2 per year
Air Filters (Catox)	Each	3	$120.29	$360.87	1 every 2 months
Blower Belts	Each	3	$114.00	$342.00	2 per year
Caustic Pump repair kit	Each	4	$83.00	$332.00	4 per year
Exhaust Fan	Each	1	$82.00	$82.00	1 per year
Fire Extinguisher	Each	4	$30.00	$120.00	2 per quarter
Flow Meter (soil vapor)	Each	1	$166.00	$166.00	2 per year
Flow sensors	Each	1	$145.00	$145.00	1 per system per year
Fuses	Each	2	$12.50	$25.00	2 per year
Hose	Each	1	$31.55	$31.55	1 per system
Hour Meter	Each	6	$60.00	$360.00	1 per year
Level Switches	Each	12	$67.00	$804.00	3 per quarter
Light bulbs	Each	24	$1.50	$36.00	2 per month
Oil	Each	4	$10.00	$40.00	1 quart per system per quarter
pH Buffers - pH10	Gallon	4	$33.85	$135.40	1 per quarter
pH Buffers - pH4	Gallon	4	$33.85	$135.40	1 per quarter
pH Buffers - pH7	Gallon	4	$33.85	$135.40	1 per quarter
pH Probes (FTO)	Each	1	$205.00	$205.00	4 per oxidizer
PID	Each	0	$3,749.70	$0.00	1 per year
Pressure Gauges	Each	6	$26.93	$161.58	6 per year
Pressure Switches	Each	4	$225.00	$900.00	4 per year
PVC check valves	Each	2	$45.00	$90.00	1 per month
PVC fittings	LS	1	$2,400.00	$2,400.00	1 per year
PVC Glue/Primer/Sealant	LS	1	$2,200.00	$500.00	1 per year
PVC pipe	LS	1	$2,400.00	$2,400.00	1 per year
PVC Valve Replacement	Each	2	$80.00	$160.00	2 per system per year
Rotameter	Each	4	$65.95	$263.80	1 per quarter
Sealant	Each	3	$12.00	$36.00	2 per month
Silicone Tubing	Foot	12	$50.77	$609.24	1 per month
Silicone	Each	12	$4.25	$51.00	6 per month
Site Signs	Each	2	$75.00	$150.00	2 per system
Sodium Hydroxide	Gallon	1200	$1.30	$1,560.00	100 gallons per month
Solenoid Valve - 1/2"	Each	2	$123.00	$246.00	2 per year
Solenoid Valve - 1"	Each	2	$195.00	$390.00	3 per year
Spill Kits	Each	1	$200.00	$200.00	4 per year
Teflon Tape 1/2"	Roll	48	$2.00	$96.00	4 per month
Temperature Gauges	Each	2	$35.00	$70.00	4 per system per year
Temperature Switches	Each	2	$132.60	$265.20	2 per year
Thermocouples	Each	3	$96.00	$288.00	6 per year
Valve Replacement	Each	4	$150.00	$600.00	1 per quarter
Vapor Hose	Each	50	$5.50	$275.00	50 per year
Vacuum Gauges	Each	1	$34.00	$34.00	1 per system per year
Zip lock Bags (12"x15")	Box of 500	2	$189.00	$378.00	2 per year

Task 4 RAO Non-Labor Items

Materials/Supplies	Rate Frequency	Quantity	Cost/Item	Total	Justification
			TOTAL	**$18,570.87**	
SUBCONTRACTORS					
Fire Extinguisher Inspection	Each	1	$9.00	$9.00	1 per year
Hazardous Waste Disposal - Solids	Each	2	$250.00	$500.00	1 drum per quarter
Hazardous Waste Disposal - Oil	Each	2	$130.00	$260.00	1 per quarter
TRAVEL					
Van/Truck Gasoline	Gallon	900	$3.00	$2,700.00	75 gallons per truck per month
Van/Truck Rental	Month	12	$534.97	$6,419.64	1 trucks per month
			TOTAL	**$9,119.64**	
			TOTAL	**$9,119.64**	per year
Electrical utility					
Based on 22kw 24/7 -365 year	kWh	560640	$0.13	**$72,883.20**	1 per year
			Years of O&M	**3**	years
			GRAND TOTAL	**$246,008.52**	

Sampling & Analysis - 3 years O&M, 1 year rebound sampling, 1 closure sampling

Analytical Assumptions:
The analytical laboratory costs are based on quotes obtained in January 2006.
18 monthly SVE well samples, 2 system samples monthly
36 quarterly SVM well samples

Basis of Estimate

Method	Samples	Unit Cost	Total Cost	Laboratory
TO-15S (Short List)	576	$110	$63,360	Air Toxics
TO-15/TVH (Full Scan)	720	$210	$151,200	Air Toxics
ASTM D1946 (fixed Gas Analysis)		$55	$0	Air Toxics
SW 8260 Halocarbons Water Analysis		$105	$0	EMAX
EPA 1613 (D/F water analysis)		$825	$0	EMAX
EPA 6010 TAL Metals		$160	$0	EMAX
SW 7196 Hex. Chromium Water Analysis		$60	$0	EMAX
Method 160.1 / 160.2 (TDS / SS Water)		$20	$0	EMAX
Method 300.0 (Chloride) Analysis		$20	$0	EMAX
Method 7470 (Hg) water analysis		$28	$0	EMAX
LC 50 Bioassay water analysis			$0	
WET/TCLP VOCs (8260) Residuals		$175	$0	EMAX
WET/TCLP Metals		$125	$0	EMAX
TOTAL 3 Years	1,296		**$214,560**	
TOTAL O&M Analytical Anuual			**$71,520**	

Closure Plans and Sampling
Direct Push collection at 10 locations with soil gas samples at 4 discrete depths per location
Assumptions:
Assumes O&M sampling for 3 years, duration of O&M, then shut down the system and collect quarterly sampling for 1 year to evaluate any concentration rebound in existing wells, then perform closure sampling. Closure sampling will be conducted by collecting soil gas samples away form existing wells to evaluate site closure. Collect system samples and online wells monthly, and well monitoring samples quarterly.

Basis of Estimate:

Role	Rate	Hrs	# of Months	Cost
Field Sampler to perform soil gas sampling	$50.00	2	36	$3,600.00
Field Sampler to document field sampling activities, COC	$50.00	1	36	$1,800.00
completion, shipping, labeling				
Project Chemist to review/validate analytical data	$90.00	1	36	$3,240.00
Data Manager to collect/organize lab data, and enter data	$75.00	1	36	$2,700.00
Subtotal				**$11,340**

Sampling Plan

Role	Rate	Hours	
Engineering to prepare quarterly sample plan	$75.00	4	$300.00
Project Manager to review quarterly sample plan	$100.00	4	$400.00
Independent Technical Review of plan	$100.00	4	$400.00
Project Chemist to prepare sample plan	$90.00	16	$1,440.00
Subtotal			**$2,540**
Total Annual Sampling Cost			**$13,880**

Create a Post Remedial Soil Confirmation and Groundwater Monitoring Plan
Basis of Estimate :
Labor

Role	Category	Draft	Final	Total Hours	Unit Cost	Total Cost
Project Mgr	Geologist - Sr	24	16	40	$ 90.00	$ 3,600.00
Author/Review Engineer - Sr	Engineer - Sr	24	16	40	$ 107.00	$ 4,280.00
Author - Engineer	Engineer - Jr	80	24	104	$ 68.00	$ 7,072.00
Author - Geologist	Geologist - Jr	80	24	104	$ 60.00	$ 6,240.00
Author - Geo Sr	Geologist - Sr	24	4	28	$ 90.00	$ 2,520.00
Geo SR - field oversight	Geologist - Sr	16	4	20	$ 90.00	$ 1,800.00
CADD/Graphics	CADD - Mid	40	8	48	$ 80.00	$ 3,840.00
Chemistry	Chemist - Mid	24	4	28	$ 63.00	$ 1,764.00
Word Processor	Clerical - Mid	16	8	24	$ 50.00	$ 1,200.00
Tech Editing	Clerical - Mid	16	8	24	$ 50.00	$ 1,200.00
Document Reproduction	Clerical - Jr	8	8	16	$ 40.00	$ 640.00
Data Management	Scientist - Mid	4	4	8	$ 73.00	$ 584.00
Total Labor		**356**	**128**	**484**		**$ 34,740.00**

ODCs

Item	Units	Quantity	Unit cost	Total	Basis
Sample shipping	each	1	$ 200.00	$ 200.00	
Copies	pages	75			Internal draft x 3 copies x 25 pages
	pages	75			Client draft x 3 copies x 25 pages
	pages	75			Internal final x 3 copies x 25 pages
	pages	100			Client final x 4 copies x 25 pages
Total B&W Copies		260	$ 0.07	$ 18.20	
Total Color Copies		65	$ 0.60	$ 39.00	
Total ODCs				**$ 257.20**	

Direct Push Field Effort Subcontractors

Description	Unit	Qty	Cost per Unit	Total Cost
Direct Push	ft	1,600	$12.50	$20,000
Grout	ft	1,600	$2.00	$3,200
Soil Gas Sample	ea	40	$145.00	$5,800
Mob/Demob	hr	3	$185.00	$555
Per Diem (per 2 man crew)	day	8	$170.00	$1,360
TOTAL				**$30,915**

Remediation Completion Report

Document the closure sampling effort in a Remediation Completion Report (RCR) and receive CVRWQCB approval. The RCR shall summarize:

Implementation of the FRP;
Post-Remedial Soil Confirmation and Groundwater Monitoring activities; and
Closure sampling results and conclusions

Basis of Estimate :

Labor

Role	Category	Draft	Final	Total Hours	Unit Cost	Total Cost
Project Manager	Geologist - Sr	40	40	80	$ 90.00	$ 7,200.00
Author	Engineer - Jr	80	40	120	$ 68.00	$ 8,160.00
Graphics	CADD - Mid	40	20	60	$ 80.00	$ 4,800.00
Technical Editing	Clerical - Mid	8	8	16	$ 50.00	$ 800.00
QA Manager	Engineer - Sr	8	8	16	$ 107.00	$ 1,712.00
Word Processing	Clerical - Mid	8	4	12	$ 50.00	$ 600.00
Document Reproduction	Clerical - Jr	2	2	4	$ 40.00	$ 160.00
Data Management	Scientist - Mid		4	4	$ 73.00	$ 292.00
Total Labor		**346**	**210**	**556**		**$ 43,104.00**

ODCs

Item	Units	Quantity	Unit cost	Total	Basis
Copies	pages	75			Internal draft x 3 copies x 25 pages
	pages	75			Client draft x 3 copies x 25 pages
	pages	75			Internal final x 3 copies x 25 pages
	pages	100			Client final x 4 copies x 25 pages
Total B&W Copies		260	$ 0.07	$18.20	
Total Color Copies		65	$ 0.60	$39.00	
Total ODCs				**$57.20**	

Total for Closure Sampling 3 year	**$109,073**
Discounted total for Closure Sampling 3 year	**$86,702**

Source Testing - Annual for 3 years

Assumptions:

The oxidizer system will be sampled annually.

Parameters to be sampled during annual testing will include:
- Dioxins/furans, HCl-HF, particulate matter, and CEM (NOx, SO2, and CO) testing.

QC samples will be collected on a frequency of ~10% of total sample number (rounding down).
At least one QC sample (i.e., field blank sampling train) will be collected for each parameter over the sampling year.
Dioxin/furan samples will be collected according to EPA Method 23 procedures.
HCl-HF samples will be collected according to CARB Method 421 procedures.
Particulate matter will be collected according to CARB Method 5 procedures.
CO, NOx, and SO2 will be collected according to CARB Method 100 procedures. Three 40-minute runs will be performed.
Ambient HCl-HF screening level measurements will be determined using indicator tubes.
HCl-HF samples will be collected at inlet and outlet locations. Three 1-hour samples will be collected at the location.
Costs for a test plan or interactions with regulatory agencies have not been included.
Electrical power will be provided at test site.
A unique report will be prepared.
Field team of three people will be able to conduct the testing.
A lift will be needed to access the exhaust stack of the SVE system for a total of 3 days.

Basis of Estimate

Source Testing
Assumes 1 oxidizer system will be tested
Each system will be sampled for dioxins/furans, HCl/HF, PM, NOx, SO2, and CO (separate from the Sampling task analytical).
One report will be prepared.

Field Work

	Category	Hours	# of Units	Total Hours	Cost
Source Tester 1 - Mob/Demob	Sr Enviro Engr	4	1	4	$400
Source Tester 2 - Mob/Demob	Engr Tech - Jr	4	1	4	$300
Sampling - Source Tester 1	Sr Enviro Engr	20	1	20	$2,000
Sampling - Source Tester 2	Engr Tech - Jr	20	1	20	$1,500
CEM Support - Mob/Demob	Jr Enviro Engr	4	1	4	$300
CEM Sampling	Jr Enviro Engr	16	1	16	$1,200
Subtotal				68	$5,700

Reporting

	Category	Hours	# of Units	Total Hours	Cost
Primary Author	Sr Enviro Engr	8	2	16	$1,600
Primary Author	Engr Tech - Jr	4	4	16	$1,200
Primary Author - CEM	Jr Enviro Engr	2	6	12	$1,200
Peer Review	Sr Enviro Engr	2	2	4	$400
Word Processing	Clerical - Sr	2	4	8	$400
Subtotal				56	$4,800

Materials/Supplies	Category	Rate Frequency	Quantity	Cost/Item	Total
OFFICE COSTS					
Fed Ex (50lb) Standard Overnight	Freight	Each	1	$ 43.45	$ 43.45
				Subtotal	$ 43.45

Supplies							
1 Liter Amber Glass (QC Class)	Supplies	Case (12)	1	$	32.00	$	32.00
1 Liter Polyethylene Bottles	Supplies	Case (12)	1	$	30.00	$	30.00
Gloves - latex disposable	Supplies	Box of 100	1	$	9.50	$	9.50
Ice - 7lb Bag	Supplies	Bag	10	$	1.50	$	15.00
Paper Towels	Supplies	Roll	1	$	1.45	$	1.45
Tape (2" clear packing)	Supplies	Roll	1	$	5.42	$	5.42
Tape (duct)	Supplies	Each	1	$	3.13	$	3.13
Teflon Tape 1	Supplies	Roll	1	$	12.00	$	12.00
Trash Bag - 33gal	Supplies	Box of 100	0	$	28.40	$	-
Water (Distilled) HPLC	Supplies	Each	1	$	40.06	$	40.06
Sampling Filters	Supplies	Box of 25	1	$	80.00	$	80.00
Silica Gel	Supplies	Each	0.5	$	60.00	$	30.00
Sodium Bicarbonate	Supplies	Each	0.5	$	45.00	$	22.50
Sodium Carbonate	Supplies	Each	0.5	$	40.00	$	20.00
Acetone	Supplies	Gallon	1	$	45.00	$	45.00
Methylene Chloride	Supplies	Gallon	1	$	45.00	$	45.00
Toluene	Supplies	Gallon	0.5	$	45.00	$	22.50
HCl Indicator Tubes	Supplies	Box	0.5	$	60.00	$	30.00
HF Indicator Tubes	Supplies	Box	0.5	$	60.00	$	30.00
Orsat Chemicals	Supplies	Each	1	$	45.00	$	45.00
Zip lock Bags (12"x15")	Supplies	Box of 500	0.25	$	189.00	$	47.25
				Subtotal		$	565.81
RENTALS							
CEM Truck (with SO2 CEM)	Rental	Day	0	$	500.00	$	-
Calibration Gases	Rental	Day	2	$	125.00	$	250.00
Scissors lift	Rental	Day	2	$	200.00	$	400.00
				Subtotal		$	650.00
REPRODUCTION							
Blue Lines	Repro	Each		$	2.00	$	-
Color Copies 8.5 x 11	Repro	Each	0	$	1.35	$	-
Color Copies 11 x 17	Repro	Each		$	2.70	$	-
Grey Scale Copies	Repro	Copy		$	20.00	$	-
Mylar Sheets	Repro	Sheet		$	3.12	$	-
Overhead Frames	Repro	Each		$	0.50	$	-
Plate Holders	Repro	Each		$	0.14	$	-
Plate Reproduction	Repro	Plate		$	2.20	$	-
Reproduction	Repro	Each	0	$	0.06	$	-
Transparencies	Repro	Each		$	1.00	$	-
Tabs	Repro	Each	0	$	0.25	$	-
				Subtotal		**$**	**-**
TRAVEL							
M&IE	Travel	Day	0	$	-	$	-
Per Diem	Travel	Day	3	$	159.00	$	477.00
Lodging	Travel	Day	0	$	-	$	-
Local Mileage	Travel	Miles	672	$	0.445	$	299.04
Van/Truck Gasoline	Travel	Gallon	0	$	2.50	$	-
Van/Truck Rental	Travel	Month	0	$	1,200.00	$	-
				Subtotal		$	776.04
					Subtotal	$	2,035.30

Analytical - Source Testing

Compound		**$/sample**	**# samples**	**QC**		**Total $**	
PCDD/PCDF	$	975.00	1	1	$	1,950.00	STL - Sacramento
XAD trap prep	$	100.00	2	2	$	400.00	STL - Sacramento
HCl/HF	$	75.00	6	4	$	750.00	STL - Sacramento
Particulate matter	$	175.00	3	2	$	875.00	
Subtotal					$	3,975.00	

Total	**$**	**16,510.30**

OHM Reports

Quarterly SVE Vadose Zone Monitoring Report

Assumptions:

Reported quarterly (final due no later than 60 days from the end of the quarter)

Reports will be 2Q2006 through 1Q2007.

Any comments from the regulatory agencies will be addressed in the pursuant report in a response to comments table.

Basis of Estimate :

Role	Category	Total Hours Per Report	# of Reports	Total Hours	Cost
Project / Jr Engineer/Geologist to update system and site spreadsheets, update site-specific	Enviro Engr - Jr	48	4	192	$14,400.00
Senior to update and review soil and groundwater isoconcentration maps + evaluate	Geologist - Sr	8	4	32	$3,200.00
Technical Editor to conduct a technical review of each site	Tech Writer - Mid	12	4	48	$2,400.00
Author to address any comments/issues brought up from peer review	Enviro Engr - Jr	8	4	32	$2,400.00
Word Processor to make updates from technical Editor and Peer Review	Clerical - Sr	18	4	72	$5,400.00
Project Chemist to prepare Data Quality Assessment (DQA)	Chemist - Mid	8	4	32	$2,880.00
External Independent Technical Review of Entire Report	Enviro Engr - Sr	16	4	64	$6,400.00
TOTAL		102		472	$37,080.00

ODCs

Item	Units	Quantity	Unit cost	Total	
Copies - B&W	pages	8,000	$ 0.07	$560.00	Quarterly Report, 200 pages, 10 copies
Color Copies	pages	150	$ 0.75	$112.50	figures, well status table, covers
3", D-Ring Binders	ea	15	$ 3.94	$59.10	Express
5-cut tabs	ea	300	$ 0.49	$147.00	tabs/report
Fed Ex (Up to 5 lbs)	ea	24	$ 5.98	$143.52	
Compact Discs, box of 10	ea	6	$ 28.30	$169.80	
		TOTAL		$1,191.92	

O&M Reports Total	$38,271.92

OU 1 and OU 2
Remedial Action Schedule
Cooper Drum Company Superfund Site

ID	Task Name	Duration	Predecessors
1	**Cooper Drum Remedial Actions**	**6723 days**	
2	**OU 1 (Groundwater) RA**	**6674 days**	
3	**RA Solicitation**	**54 days**	
4	Post solicitation	30 edays	
5	Receive proposals	0 days	4
6	Review soliciatation proposals	10 days	5
7	Award solicitation	0 days	6
8	Notice-to-Proceed	0 days	7FS+30 edays
9	Preparation of Draft Plans (RAWP, SAP, HASP)	60 days	8
10	Regulatory Agencies Review of Draft Plans	60 edays	9
11	Incorporate Comments and Submit Draft Final Plans	30 days	10
12	Regulatory Agencies Review of Draft Final Plans	60 edays	11
13	Incorporate Comments and Submit Final Plans	30 days	12
14	Permitting for RA (WDR, NPDES, Building Dept, etc)	90 edays	13FF
15	Installation of Remedy	30 days	14
16	Initial Startup and Testing	15 days	15
17	**Full Scale O&M of RA Remedy**	**5995 days**	
18	Source Area in situ ISCO system	1095 edays	16
19	Downgradient P&T System	8395 edays	16
20	**Biobarrier Injections**	**561 days**	
21	First Injection	30 edays	19SS+30 edays
22	Second Injection	25 edays	21FS+730 edays
23	Remedy Performance Monitoring	8395 edays	16
24	Site Closure Work Plan	30 days	23
25	Site Closure Sampling/Monitoring	365 edays	24FS+30 edays
26	Site Closure Monitoring Results Report	30 days	25
27	Receive Site Closure	0 days	26FS+45 edays
28	**OU 2 (Soil) RA**	**1620 days**	
29	**RA Solicitation**	**62 days**	
30	Post solicitation	30 days	
31	Receive proposals	0 days	30
32	Review soliciatation proposals	10 days	31
33	Award solicitation	0 days	32
34	Notice-to-Proceed	0 days	33FS+30 edays
35	Preparation of Draft Plans (RAWP, SAP, HASP)	60 days	34
36	Regulatory Agencies Review of Draft Plans	60 edays	35
37	Incorporate Comments and Submit Draft Final Plans	30 days	36
38	Regulatory Agencies Review of Draft Final Plans	60 edays	37
39	Incorporate Comments and Submit Final Plans	30 days	38
40	Permitting for RA (WDR, NPDES, Building Dept, etc)	90 edays	39FF
41	Installation of Remedy	30 days	40
42	Initial Startup and Testing	15 days	41
43	Full Scale O&M of RA Remedy	1095 edays	42
44	**Remedy STOP Evaluation**	**394 days**	
45	Site Closure Sampling/Monitoring	550 edays	43
46	Submit Remedy STOP Report	0 days	44FS+60 days
47	Receive Approval to STOP OU 2 RA	0 days	46FS+45 edays

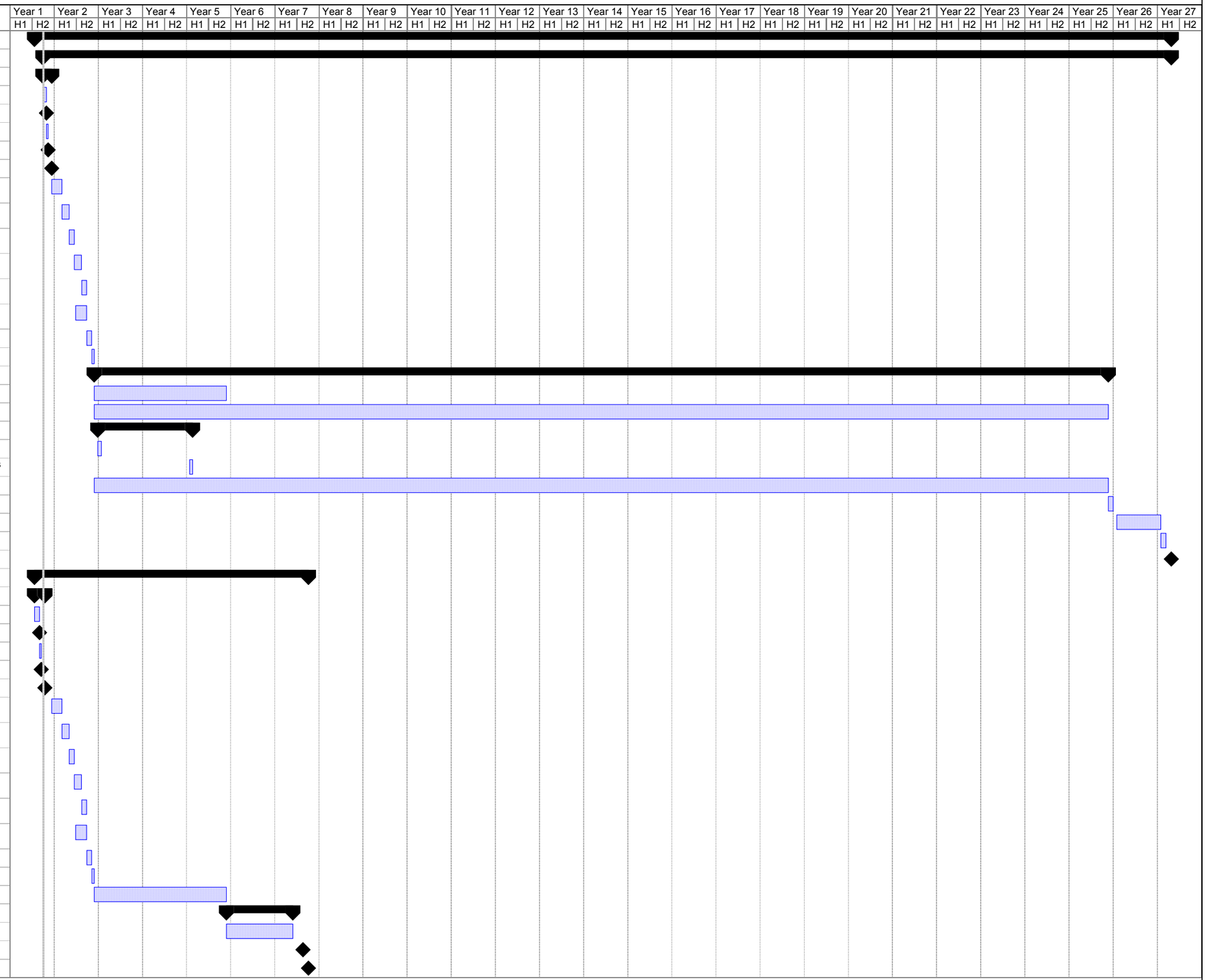

UNITED STATES DISTRICT COURT
CENTRAL DISTRICT OF CALIFORNIA
WESTERN DIVISION

UNITED STATES OF AMERICA, & STATE OF CALIFORNIA,	)	CIV. NO.:
Plaintiffs,	)	
v.	)	CONSENT DECREE
AC PRODUCTS, INC., et al.	)	
Defendants.	)	

Appendix E

List of All Settling Defendants

APPENDIX E

LIST OF SETTLING DEFENDANTS

1. AC Products, Inc.

2. A. G. Layne, Inc., a California corporation, and its officers, directors, shareholders and corporate successors.

3. Alpha Corporation of Tennessee Inc.

4. Ashland Inc.

5. Atlantic Richfield Company

6. Baker Petrolite LLC

7. Cargill, Incorporated

8. Castrol Industrial North America Inc.

9. Chemical Waste Management, Inc.

10. Chevron U.S.A. Inc.

11. Coral Chemical Company

12. D.A. Stuart Company

13. Dunn-Edwards Corporation

14. ExxonMobil Oil Corporation

15. Gallade Chemical, Inc. (formerly known as and doing business as Orange County Chemical)

16. Hasco Oil Company, Inc.

17. Houghton International, Inc.

18. J.H. Mitchell & Sons Distributors, Inc., a California Corporation, and its officers, directors, shareholders and corporate successors

19. Lockheed-Martin Corporation, including all officers, directors, shareholders, and corporate successors

20. Lonza Inc.

21. Lubricating Specialties Company

22. Mathisen Oil Co., Inc., a California corporation, and its officers, directors, shareholders and corporate successors

23. Pennzoil-Quaker State Company (for itself and for Penreco)

24. PolyOne Corporation

25. PPG Industries, Inc.

26. PTM&W Industries Inc.

27. Quaker Chemical Corporation

28. Rathon Corp., including all officers, directors and corporate successors

29. Shell Chemical LP

30. Shell Oil Company

31. SOCO West, Inc.

32. Southern California Edison

33. Southern Counties Oil Co., a California Corporation, and Southern Counties Oil Co., a California Limited Partnership

34. Sta-Lube LLC, formerly Sta-Lube, Inc., originally and incorrectly sued as CRC Industries, Inc.

35. Stuarts' Petroleum, a California Corporation, and its officers, directors, shareholders and corporate successors

36. Texaco Downstream Properties Inc.

37. The Boeing Company

38. The Valspar Corporation and its wholly owned subsidiary, Engineered Polymer Solutions, Inc.

39. Union Oil Company of California

40. Univar USA Inc. on behalf of itself and Chemcentral Corp.

UNITED STATES DISTRICT COURT
CENTRAL DISTRICT OF CALIFORNIA
WESTERN DIVISION

UNITED STATES OF AMERICA, & STATE OF CALIFORNIA,	)	CIV. NO.:
Plaintiffs,	)	
v.	)	CONSENT DECREE
AC PRODUCTS, INC., et al.	)	
Defendants.	)	

Appendix F

List of Ability-to-Pay Settling Defendants and the Amounts They are to Pay

APPENDIX F

List of Ability to Pay Settling Defendants with Payment Amounts and Times of Payment

NAME OF PARTY	AMOUNT	DATE OF PAYMENT
1) A.G. Layne, Inc., a California corporation, and its officers, directors, shareholders and corporate successors	$295,000	30 Days after Entry of CD
2) J. H. Mitchell & Sons Distributors, Inc., a California Corporation, and its officers, directors, shareholders and corporate successors	$97,500	30 Days after Entry of CD
3) Mathisen Oil Co., Inc., a California corporation, and its officers, directors, shareholders and corporate successors	$205,000	30 Days after Entry of CD

UNITED STATES DISTRICT COURT
CENTRAL DISTRICT OF CALIFORNIA
WESTERN DIVISION

UNITED STATES OF AMERICA, & STATE OF CALIFORNIA,	)	CIV. NO.:
Plaintiffs,	)	
v.	)	CONSENT DECREE
AC PRODUCTS, INC., et al.	)	
Defendants.	)	

Appendix G

List of De Minimis Settling Defendants and the Amounts They are to Pay

APPENDIX G

List of De Minimis Settling Defendants with Payment Amounts and Times of Payment

NAME OF SETTLING DEFENDANT	AMOUNT	DATE OF PAYMENT
1) D.A. Stuart Company	$300,000	30 Days after Entry of CD
2) Houghton International, Inc.	$300,000	30 Days after Entry of CD
3) Lockheed Martin Corporation, including all officers, directors, shareholders and corporate successors	$350,000	30 Days after Entry of CD
4) Rathon Corporation, including all officers, directors and corporate successors	$375,000	30 Days after Entry of CD
5) Southern California Edison	$400,000	30 Days after Entry of CD
6) Sta-Lube LLC, formerly Sta-Lube, Inc. originally and incorrectly sued as CRC Industries, Inc.	$300,000	30 Days after Entry of CD
7) Stuarts' Petroleum, a California corporation, and its officers, directors, Shareholders and corporate successors	$300,000	30 Days after Entry of CD

UNITED STATES DISTRICT COURT
CENTRAL DISTRICT OF CALIFORNIA
WESTERN DIVISION

UNITED STATES OF AMERICA, & STATE OF CALIFORNIA,	)	CIV. NO.:
Plaintiffs,	)	
v.	)	CONSENT DECREE
AC PRODUCTS, INC., et al.	)	
Defendants.	)	

Appendix H

List of Contributing Settling Defendants and the Amounts They are to Pay

APPENDIX H

List of Contributing Settling Defendants with Payment Amounts and Times of Payment

NAME OF SETTLING DEFENDANT	AMOUNT	DATE OF PAYMENT
1. Alpha Corporation of Tennessee Inc.	$125.000	30 days after entry of CD
2. Gallade Chemical, Inc. (formerly known as and doing business as Orange County Chemical)	$705,000	Three equal annual installments, the first due 60 days after entry of CD
3. PolyOne Corporation	$125,000	30 days after entry of CD
4. PPG Industries, Inc.	$125,000	30 days after entry of CD
5. PTM&W Industries Inc.	$125,000	30 days after entry of CD
6. The Boeing Company	$150,000	30 days after entry of CD

UNITED STATES DISTRICT COURT
CENTRAL DISTRICT OF CALIFORNIA
WESTERN DIVISION

UNITED STATES OF AMERICA, & STATE OF CALIFORNIA,	)	CIV. NO.:
Plaintiffs,	)	
v.	)	CONSENT DECREE
AC PRODUCTS, INC., et al.	)	
Defendants.	)	

Appendix I

List of Performing Settling Defendants

APPENDIX I
PERFORMING SETTLING DEFENDANTS

1.	AC Products, Inc.
2.	Ashland Inc.
3.	Atlantic Richfield Company
4.	Baker Petrolite LLC
5.	Cargill, Incorporated
6.	Castrol Industrial North America Inc.
7.	Chemical Waste Management, Inc.
8.	Chevron U.S.A. Inc.
9.	Coral Chemical Company
10.	Dunn-Edwards Corporation
11.	ExxonMobil Oil Corporation
12.	Hasco Oil Company, Inc.
13.	Lonza Inc.
14.	Lubricating Specialties Company
15.	Pennzoil-Quaker State Company (for itself and for Penreco)
16.	Quaker Chemical Corporation
17.	Shell Chemical LP
18.	Shell Oil Company
19.	SOCO West, Inc.
20.	Southern Counties Oil Co., a California corporation, and Southern Counties Oil Co., a California limited partnership
21.	Texaco Downstream Properties Inc.
22.	The Valspar Corporation and its wholly owned subsidiary, Engineered Polymer Solutions, Inc.
23.	Union Oil Company of California
24.	Univar USA Inc. on behalf of itself and Chemcentral Corp.

UNITED STATES DISTRICT COURT
CENTRAL DISTRICT OF CALIFORNIA
WESTERN DIVISION

UNITED STATES OF AMERICA, & STATE OF CALIFORNIA,	)	CIV. NO.:
Plaintiffs,	)	
v.	)	CONSENT DECREE
AC PRODUCTS, INC., et al.	)	
Defendants.	)	

Appendix J

Form of Performance Guarantee selected by Performing Settling Defendants and approved by the United States

[To Be Inserted] Letterhead of Bond Issuer

PERFORMANCE BOND

Surety's Performance Bond Number:	**[performance bond number to be updated]**
Date of Execution of Performance Bond:	[**to be updated**]
Effective Date of Performance Bond:	**[to be updated]**
Total Dollar Amount of Performance Bond:	$14,020,500

PRINCIPAL:	
Legal Name:	The Cooper Drum Cooperating Parties Group (those members set out in Exhibit A)
Address:	c/o Common Counsel Daniel E. Vineyard Jackson Walker L.L.P. 1401 McKinney St., Suite 1900 Houston, Texas 77010
Contact Person(s)/Information:	Daniel E. Vineyard, Common Counsel Telephone: 713-752-4277 Fax: 713-308-4177 dvineyard@jw.com
SURETY:	
Legal Name:	North American Specialty Insurance Company
Address:	475 North Martingale Road, Suite 850, Schaumburg, IL 60173, United States (USA)
Contact Person(s)/Information:	[**insert name and contact information (phone, email)**]
BENEFICIARY:	
Legal Name:	U.S. Environmental Protection Agency Region 9 c/o [**insert appropriate Regional official such as "Superfund Division Director"**]
Address/Contact Information:	[**insert address and contact information (phone, email)**]
SITE INFORMATION:	
Name and Location of Site:	Cooper Drum Company Superfund Site, South Gate, California ("Site")
EPA Identification Number:	CERCLIS Identification Number CAD055753370.
Agreement Governing Site Work:	Consent Decree dated [**insert date**], [**insert as appropriate:** civil action number for consent decrees or EPA docket number for administrative agreements], between the United States of America and [**insert settling parties**] (the "Agreement")]

KNOW ALL PERSONS BY THESE PRESENTS, THAT:

WHEREAS, said Principal is required, under the Agreement entered pursuant to the Comprehensive Environmental Response, Compensation, and Liability Act (CERCLA), 42 U.S.C. §§ 9601-9675, to perform the "Work" as defined in such Agreement (hereinafter, the "Work") and to fulfill its other obligations as set forth therein; and

WHEREAS, said Principal is required by the Agreement to provide financial assurance to ensure completion of the Work.

NOW, THEREFORE, in consideration of the foregoing, and for other good and valuable consideration the receipt of which is hereby acknowledged, the parties hereto agree as follows:

1. The Principal and Surety hereto are firmly bound to the United States Environmental Protection Agency (EPA or Beneficiary), in the above Total Dollar Amount of this Performance Bond, for the performance or payment of the Work, which we, the Principal and Surety, bind ourselves, our heirs, executors, administrators, successors, and assigns, jointly and severally, subject to and in accordance with the terms and conditions hereof.

2. The conditions of the Surety's obligation hereunder are such that if the Principal shall promptly, faithfully, fully, and finally complete the Work in accordance with the terms of the Agreement, the Surety's obligation hereunder shall be null and void; otherwise it is to remain in full force and effect.

3. Pursuant to and in accordance with the terms of the Agreement, and except as specifically provided in Paragraph 5 below, the Surety shall become liable on the obligation evidenced hereby only upon the Principal's failure to perform all or any portion(s) of the Work, EPA's subsequent notice of a Work Takeover, and the Principal's failure to remedy to EPA's satisfaction the circumstances giving rise to EPA's issuance of such notice. At any time and from time to time upon notification by EPA (as specified in the Agreement) that a Work Takeover has commenced, the Surety shall, up to the Total Dollar Amount of the Performance Bond, promptly (and in any event within 15 days after receiving such notification):

(a) Commence to complete the Work to be done under the Agreement in accordance with its terms and conditions; or

(b) Pay to EPA funds in such amounts and to such person(s), account(s), or otherwise as EPA may direct.

If the Surety does not render such performance or payment set forth above within the specified 15-day period, the Surety shall be deemed to be in default of this Performance Bond and EPA shall be entitled to enforce any remedy available to it at law, in equity, or otherwise; provided, however, that if such default is susceptible of cure but cannot reasonably be cured

within such 15-day period and provided further that Surety shall have commenced to cure such default within such 15-day period and thereafter diligently proceeds to perform the same, such 15-day period shall be extended for such time as is reasonably necessary for Surety in the exercise of due diligence to cure such default, such additional period not to exceed 90 days.

4. The liability of the Surety shall not be discharged by any performance, payment, or succession of payments hereunder, unless and until such performance, payment, or payments shall amount in the aggregate to the Total Dollar Amount of this Performance Bond, but in no event shall the aggregate obligation of the Surety hereunder exceed the amount of said sum.

5. The Surety may cancel this Performance Bond only by sending notice of cancellation to the Principal and to the Beneficiary, provided, however, that no such cancellation shall be effective during the 120-day period beginning on the date of receipt of the notice of cancellation by both the Principal and the Beneficiary, as evidenced by return receipts. If after 90 days of such 120-day period, the Principal has failed to provide alternative financial assurance to EPA in accordance with the terms of the Agreement, EPA shall have the right to (up to the Total Dollar Amount of this Performance Bond) demand performance of the Work or draw on the guaranteed funds.

6. The Principal may terminate this Performance Bond only by sending written notice of termination to the Surety and to the Beneficiary, provided, however, that no such termination shall become effective unless and until the Surety receives written authorization for termination of this Performance Bond by the Beneficiary.

7. Any modification, revision, or amendment that may be made to the terms of the Agreement or to the Work to be done thereunder, or any extension of the Agreement, or other forbearance on the part of either the Principal or Beneficiary to the other, shall not in any way release the Principal and the Surety, or either of them, or their heirs, executors, administrators, successors, or assigns from liability hereunder. The Surety hereby expressly waives notice of any change, revision, or amendment to the Agreement or to any related obligations between the Principal and the Beneficiary.

8. The Surety will immediately notify the Beneficiary of any of the following events: (a) the filing by the Surety of a petition seeking to take advantage of any laws relating to bankruptcy, insolvency, reorganization, winding up or composition or adjustment of debts; (b) the Surety's consent to (or failure to contest in a timely manner) any petition filed against it in an involuntary case under such bankruptcy or other laws; (c) the Surety's application for (or consent to or failure to contest in a timely manner) the appointment of, or the taking of possession by, a receiver, custodian, trustee, liquidator, or the like of itself or of all or a substantial part of its assets; (d) the Surety's making a general assignment for the benefit of creditors; or (e) the Surety's taking any corporate action for the purpose of effecting any of the foregoing.

9. Any provision in this Performance Bond that conflicts with CERCLA or any other applicable statutory or legal requirement shall be deemed deleted herefrom and provisions conforming to such statutory or legal requirement shall be deemed incorporated herein.

10. All notices, elections, consents, approvals, demands, and requests required or permitted hereunder shall be given in writing to (unless updated from time to time) the addressees shown on the first page of this Performance Bond, identify the Site, and provide a contact person (and contact information). All such correspondence shall be: (a) effective for all purposes if hand delivered or sent by (i) certified or registered United States mail, postage prepaid, return receipt requested or (ii) expedited prepaid delivery service, either commercial or United States Postal Service, with proof of attempted delivery, to the relevant address shown on the first page of this Performance Bond; and (b) effective and deemed received upon the earliest of (i) the actual receipt of the same by personal delivery or otherwise, (ii) one business day after being deposited with a nationally recognized overnight courier service as required above, or (iii) three business days after being deposited in the United States mail as required above. Rejection or other refusal to accept or the inability to deliver because of changed address of which no notice was given as herein required shall be deemed to be receipt of the notice, election, consent, approval, demand, or request sent.

11. The Surety hereby agrees that the obligations of the Surety under this Performance Bond shall be in no way impaired or affected by any winding up, insolvency, bankruptcy, or reorganization of the Principal or by any other arrangement or rearrangement of the Principal for the benefit of creditors.

12. No right of action shall accrue on this Performance Bond to or for the use of any person other than the Beneficiary or the executors, administrators, successors, or assigns of the Beneficiary.

[SIGNATURES ON FOLLOWING PAGE]

IN WITNESS WHEREOF, the Principal and Surety have executed this Performance Bond and have affixed their seals on the date set forth above.

The persons whose signatures appear below hereby represent, warrant, and certify that they are authorized to execute this Performance Bond on behalf of the Principal and Surety, respectively.

FOR THE PRINCIPAL:

Date: _____

By : _____
Printed name: Daniel E. Vineyard_____
Title: Common Counsel_____

State of [**insert state**]
County of [**insert county**]

On this [**insert date**], before me personally came [**insert name of PRP/Settling Defendant's signatory**] to me known, who, being by me duly sworn, did depose and say that she/he is [**insert title**] of [**insert name of PRP/Settling Defendant**], the entity described in and which executed the above instrument; and that she/he signed her/his name thereto.

_____
[Signature of Notary Public]

FOR THE SURETY:

Date: _____

By [signature]: _____
Printed name: _____
Title: _____

State of [**insert state**]
County of [**insert county**]

On this [**insert date**], before me personally came [**insert name of Surety's signatory**] to me known, who, being by me duly sworn, did depose and say that she/he is [**insert title**] of [**insert name of Surety**], the entity described in and which executed the above instrument; and that she/he signed her/his name thereto.

_____
[Signature of Notary Public]

Saturn Insurance Inc.
100 Bank Street - Suite 500
Burlington, VT 05401
"the Company"

REMEDIAL ACTION POLICY

POLICY NUMBER: SII – ENV – CA (CINA Cooper Drum) – 1516

THIS IS A CLAIMS MADE POLICY. COVERAGE IS LIMITED TO LIABILITY FOR CLAIMS FIRST MADE AGAINST AN INSURED AND REPORTED TO THE COMPANY DURING THE POLICY PERIOD. PLEASE READ THE POLICY CAREFULLY.

DECLARATIONS

Item 1. Named Insured: BP Corporation North America, Inc. and/or all of its subsidiary and affiliated entities (including, but not limited to corporations, partnerships or joint ventures, in each case limited to the Named Insured's direct or indirect ownership interest in any such entities), as well as any former subsidiary, associated or financially controlled company, as may now or hereafter be constituted or acquired, including any other entity (including, but not limited to any corporations, partnerships or joint ventures, in each case limited to the Named Insured's direct or indirect ownership interest in any such entities) for which the Named Insured has assumed control or responsibility.

Additional Named Insureds: Castrol Industrial North America

Item 2. Mailing Address: 501 Westlake Park Boulevard
Houston, TX 77079

Item 3. Policy Period: **[Date]** to **[Date]** at 12:01AM Standard Time at the Named Insured's address shown above.

Item 4. Coverage: This policy provides coverage for Remedial Action as set forth in the policy.

Item 5. Covered Location(s): See Endorsement #1

Item 6. Limits of Insurance: See Endorsement #2

Item 7. Policy Retroactive Date **[Date]**

DRAFT

Item 8. Deductible: $0 Each Occurrence

Item 9. Premium: **$3,372**

Saturn Insurance Inc.

By: _____
Authorized Representative

DRAFT

REMEDIAL ACTION POLICY

THIS IS A "CLAIMS-MADE AND REPORTED" POLICY. THE POLICY REQUIRES THAT A CLAIM BE MADE UPON THE INSURED AND REPORTED TO THE COMPANY DURING THE POLICY PERIOD OR EXTENDED REPORTING PERIOD, IF ANY. PLEASE READ CAREFULLY.

In consideration of the payment of the premium, in reliance upon the statements in the Declarations and Application made a part hereof and subject to all the terms of this Policy, the Company agrees with the **Named Insured** as follows:

SECTION I. COVERAGE - Insuring Agreement.

The Company agrees to pay on behalf of the **Insured,** subject to the limits of liability of this Policy, **Response Costs** that the **Insured** is legally obligated to pay for **Remedial Action** pursuant to the **Consent Decree** for a **Covered Location.** For this coverage to apply:

1. The **Named Insured** or the **Regulatory Agency** must make a written **Remedial Action Claim** for **Response Costs** to the Company during the **Policy Period**; and

2. The **Named Insured** or the **Regulatory Agency** must routinely report the **Response Costs** to the Company in a timely manner during the **Policy Period**.

SECTION II. EXCLUSIONS

This insurance does not apply to expenses, losses, liabilities, or damages of any kind incurred by, accruing to, or alleged to be liabilities of the **Insured**, by reason of:

A. Any criminal or civil penalties imposed by reason of the violation of any law or regulation.

B. Any third-party claims for **Bodily Injury** or **Property Damage**.

C. Any expenses, charges or costs resulting from the defense and/or investigation of any liability or obligation for **Response Costs** hereunder. However, this exclusion shall not apply to any costs or charges for investigations required for compliance with the **Remedial Action** at the **Covered Location** including but not limited to investigation of groundwater quality, hydrogeology, and chemical fate and transport, and remediation of soil and/or groundwater.

SECTION III. CLAIMS PROVISIONS

Any notices required by these conditions shall be sent to:

Saturn Insurance Inc.
c/o Willis Management (Vermont), Ltd.
100 Bank Street - Suite 500
Burlington, VT 05401

A. The Company, upon receipt of a **Remedial Action Claim**, shall review and issue payment as directed by the **Regulatory Agency** for all undisputed **Response Costs** within thirty (30) days of receipt of the **Remedial Action Claim** and all necessary information verifying the amount of the **Response Costs** for which reimbursement is being sought. The Company further agrees to notify the **Insured** and the **Regulatory Agency** in writing within thirty (30) days of receipt of any **Remedial Action Claim** made for **Response Costs** what amount, if any, of the **Remedial Action Claim** is in dispute and what back up information is needed to resolve the dispute. The Company, the **Insured**

and the **Regulatory Agency** agree to cooperate to resolve any dispute, and if a dispute cannot be resolved promptly, to submit the same to binding arbitration upon the request of the **Insured** on or after the expiration of thirty (30) days after the submission of any statement or bill of expenditures for **Response Costs** by the **Regulatory Agency**, which arbitration shall be conducted, in accordance with the rules and regulations outlined in the American Arbitration Association guidelines.

B. The Company may only disburse those funds from the Policy that the **Regulatory Agency** approves in writing.

C. In the event of **Financial Default** by the **Insured** at a **Covered Location** and upon written direction of the **Regulatory Agency**, the Company guarantees that funds, up to the **Response Costs Face Amount** shown in the Declarations for the same **Covered Location**, will be available to pay **Response Costs** for such **Covered Location** to such party or parties as the **Regulatory Agency** specifies.

D. The funds from the Policy identified in the Declarations as **Response Costs** will be utilized solely for the purpose of conducting **Remedial Action** at the specified **Covered Location**.

SECTION IV. DEFINITIONS

A. **Additional Named Insureds** means all persons or entities designated as such in Item 1 of the Declarations.

B. **Bodily Injury** means bodily injury, sickness, disease, fear of sickness or disease, mental anguish and mental injury, emotional distress, psychic injury, or disability including care, loss of services or death resulting therefrom.

C. **Consent Decree** means the following Decree(s):

1. Consent Decree, U.S. v. Ashland, Inc. et al, Civ. No. **[ ]** (C.D. Cal., **[Date]**).

D. **Covered Location** means any facility specifically identified in Item 5. of the Declarations, or any other location specifically endorsed onto this Policy as a **Covered Location**.

E. **Financial Default** means the failure of the **Insured** to perform the **Remedial Action(s)** at a **Covered Location** as required by the applicable law and the applicable **Consent Decree**.

F. **Insured** means the **Named Insured**, all **Additional Named Insureds** and any trustee, principal, member, director, officer, partner or employee thereof while acting within the scope of his/her duties as such, and any person or entity designated as an additional insured by an endorsement issued to form a part of this Policy.

G. **Named Insured** means the person or entity designated as such in Item 1 of the Declarations.

H. **Policy Aggregate Face Amount** means the maximum limit of liability that the Company will pay for all **Response Costs** for all **Covered Location**(s) designated in the Declarations.

I. **Policy Period** means the period set forth in Item 3 of the Declarations, or any shorter period arising as a result of cancellation of this Policy.

J. **Property Damage** means:

1. physical injury to or destruction of tangible property, including the personal property of third parties; or
2. loss of use of such property that has not been physically injured or destroyed; or
3. diminished third party property value.

K. **Regulatory Agency** means the U.S. Environmental Protection Agency (EPA) or any agency that becomes responsible for the supervision of **Remedial Action.**

L. **Remedial Action** means those measures or actions necessary to complete **Work** specified in the **Consent Decree**.

M. **Remedial Action Claim** means a request by the **Insured**, or by the **Regulatory Agency** in the event of **Financial Default**, for payment of **Response Costs**, for which the **Insured** is liable, by reason of a **Remedial Action** at a **Covered Location** in accordance with the **Consent Decree** provided that such request is first submitted in writing to the Company during the **Policy Period.**

N. **Response Costs** mean all costs associated with the development and implementation of a **Remedial Action** including all direct and indirect capital costs, engineering costs, and annual operation, maintenance and monitoring costs. Such costs, when applicable, shall include, without limitation, costs for preparation of plans specified in the **Consent Decree**, investigation, sampling and analysis, remedial design, construction of all facilities and process equipment, labor, materials, construction equipment and services, land purchase, land preparation/development, relocation expenses, systems start up and testing, facility operation, maintenance and repair, continuous effectiveness monitoring, periodic site condition reviews, and legal, administrative, over site and capital costs.

O. **Response Costs Face Amount** means the Company's maximum limit of liability for **Response Costs** for the specific **Covered Location** as designated in the Declarations.

P. **Work** had the meaning as defined in the **Consent Decree**.

SECTION V. LIMIT OF LIABILITY AND DEDUCTIBLE

A. With respect to the scheduled **Covered Location** shown in the Declarations, the Company's total liability for all **Response Costs** shall not exceed the limit of liability shown in the Schedule as the **Policy Aggregate Face Amount**.

B. Subject to subsection (A) above, the maximum Policy liability for **Response Costs** at the scheduled **Covered Location** shall not exceed the **Response Costs Face Amount** regardless of the number of:

1. facilities shown in the Declarations;
2. **Insureds** under this policy; or
3. **Claims** made or suits brought.

C. The company shall pay any applicable deductible amount and upon notification to the **Insured** or the **Insured**'s representative of such payment, the **Insured** shall promptly reimburse the Company for the amount so paid.

SECTION VI. CONDITIONS

A. **Inspection and Audit** - The Company shall be permitted but not obligated to inspect, sample and monitor on a continuing basis a scheduled **Covered Location** at any time. Neither the Company's right to make inspections, sample and monitor, nor the actual undertaking thereof nor any report thereon, shall constitute an undertaking, on behalf of the **Insured** or others, to determine or warrant that the **Covered Location** or the operations at the **Covered Location** are safe, healthful or conform to acceptable engineering practice or are in compliance with any law, rule or regulation. The Company or its designee may examine and audit the **Insured**'s books and records at any time during the **Policy Period** and extensions thereof, as far as they relate to the subject matter of this

insurance, and within any periods of **Remedial Action** for which coverage is provided whether Insurance of this Policy has expired.

B. Cancellation - The Company may not cancel, terminate or fail to renew the policy except for failure to pay the premium. The automatic renewal of the policy must, at a minimum, provide the **Insured** with the option of renewal at the face amount of the expiring policy. If there is a failure to pay the premium, the Company may elect to cancel, terminate, or fail to renew the Policy by sending notice by certified mail to the **Insured** and the **Regulatory Agency**. Cancellation, termination, or failure to renew may not occur, however, during the one hundred twenty (120) days beginning at the receipt of the notice by both the **Regulatory Agency** and the **Insured** as evidenced by return receipt. Cancellation, termination or failure to renew may not occur and the Policy will remain in full force and effect in the event that on or before the date of expiration:

1. The **Insured** is named as a debtor in a voluntary or involuntary proceeding under Title II (Bankruptcy), US Code; or

2. The premium due is paid in full.

C. Representations - By acceptance of this Policy, the **Named Insured** agrees that the statements in the Declarations and Application(s) are their representations, that this Policy is issued in reliance upon the truth of such representations, and that this Policy embodies all agreements existing between the **Named Insured** and the Company or any of its agents relating to this insurance.

D. Action Against Company - No third-party action shall lie against the Company, unless as a condition precedent thereto, there shall have been full compliance with all of the terms of this Policy, nor until the amount of the **Insured**'s obligation to pay shall have been finally determined either by judgment against the **Insured** after actual trial, expedited declaratory proceeding or by written agreement of the **Insured,** the claimant or **Regulatory Agency** and the Company, as applicable.

Any person or organization or the legal representative thereof who has secured such judgment or written agreement shall thereafter be entitled to recover under this Policy to the extent of the insurance afforded by this Policy. No person or organization shall have any right under this Policy to join the Company as a party to any action against the **Insured** to determine the **Insured**'s liability, nor shall the Company be impleaded by the **Insured** or his legal representative. Bankruptcy or insolvency of the **Insured** or of the **Insured**'s estate shall not relieve the Company of any of its obligations hereunder.

E. Changes - Notice to any agent or knowledge possessed by any agent or by any other person shall not effect a waiver or a change in any part of this Policy or estop the Company from asserting any right under the terms of this Policy; nor shall the terms of this Policy be waived or changed, except by endorsement issued to form a part of this Policy.

F. Other Insurance - This insurance is primary with respect to other valid and collectible insurance available to the **Named Insured**.

G. Mutual Construction – The Company and all **Insured** agree that the rule of contract construction that ambiguities are to be construed against the drafter shall not apply to any dispute arising under this Policy. Any such ambiguity shall be construed to give effect to the mutual intent of the parties as expressed herein.

H. Warranties – The Company has issued this policy to provide financial assurance for **Remedial Action** for scheduled **Covered Location**(s). The Company hereby warrants that this Policy is to provide financial assurance for **Remedial Action** at the **Covered Location** in accordance with the **Consent Decree**.

DRAFT

SECTION VII. SERVICE OF SUIT

It is agreed that in the event of any dispute under the Policy in which the **Regulatory Agency** or the **Named Insured** is a party, the Company, at the request of the **Regulatory Agency** or the **Named Insured**, will submit to the jurisdiction of the United States District Court, in the state where the insured **Covered Location** is located. It is further agreed that service of process in such suit may be made upon Counsel, Legal Department, Saturn Insurance Inc., c/o Willis Management (Vermont), Ltd., 100 Bank Street - Suite 500, Burlington, VT 05401, or his or her representative, and that in any suit instituted against the Company upon this Policy, the Company, will abide by the final decision of such court or of any appellate court in the event of any appeal.

SECTION VIII. CHOICE OF LAW

This Policy will be governed by and construed under the laws of the State of Vermont without regard to principles of conflicts of laws.

IN WITNESS WHEREOF, the Company has caused this Policy and the Declarations page to be signed by its duly authorized representatives or countersigned in states where applicable.

SATURN INSURANCE INC.

By:_____
Its duly authorized representative

DRAFT

Saturn Insurance Inc.
100 Bank Street - Suite 500
Burlington, VT 05401
"the Company"

Endorsement #1

Covered Location(s)

The Covered Location(s) referred to in Item 5 of the Declarations are as follows:

5. Covered Location(s):

Cooper Drum Company Superfund Site
9316 South Atlantic Avenue,
South Gate, CA

U.S. EPA ID Number CAD055753370

By: _____
Authorized Representative of
Saturn Insurance Inc.
100 Bank Street - Suite 500
Burlington, VT 05401

DRAFT

Saturn Insurance Inc.
100 Bank Street - Suite 500
Burlington, VT 05401
"the Company"

Endorsement #2

Limits of Insurance

The Limits of Insurance referred to in Item 6 of the Declarations are as follows:

6. Limits of Insurance:

Response Costs Face Amount:	$	421,500
Overall Policy Limit:	**$**	421,500

By: _____
Authorized Representative of
Saturn Insurance Inc.
100 Bank Street - Suite 500
Burlington, VT 05401

Saturn Insurance Inc.
100 Bank Street - Suite 500
Burlington, VT 05401
"the Company"

REMEDIAL ACTION POLICY

POLICY NUMBER: SII – ENV – CA (ARC Cooper Drum) – 1516

THIS IS A CLAIMS MADE POLICY. COVERAGE IS LIMITED TO LIABILITY FOR CLAIMS FIRST MADE AGAINST AN INSURED AND REPORTED TO THE COMPANY DURING THE POLICY PERIOD. PLEASE READ THE POLICY CAREFULLY.

DECLARATIONS

Item 1. Named Insured: BP Corporation North America, Inc. and/or all of its subsidiary and affiliated entities (including, but not limited to corporations, partnerships or joint ventures, in each case limited to the Named Insured's direct or indirect ownership interest in any such entities), as well as any former subsidiary, associated or financially controlled company, as may now or hereafter be constituted or acquired, including any other entity (including, but not limited to any corporations, partnerships or joint ventures, in each case limited to the Named Insured's direct or indirect ownership interest in any such entities) for which the Named Insured has assumed control or responsibility.

Additional Named Insureds: Atlantic Richfield Company

Item 2. Mailing Address: 501 Westlake Park Boulevard
Houston, TX 77079

Item 3. Policy Period: **[Date]** to **[Date]** at 12:01AM Standard Time at the Named Insured's address shown above.

Item 4. Coverage: This policy provides coverage for Remedial Action as set forth in the policy.

Item 5. Covered Location(s): See Endorsement #1

Item 6. Limits of Insurance: See Endorsement #2

Item 7. Policy Retroactive Date **[Date]**

DRAFT

Item 8. Deductible: $0 Each Occurrence

Item 9. Premium: **$4,464**

Saturn Insurance Inc.

By: _____
Authorized Representative

DRAFT

REMEDIAL ACTION POLICY

THIS IS A "CLAIMS-MADE AND REPORTED" POLICY. THE POLICY REQUIRES THAT A CLAIM BE MADE UPON THE INSURED AND REPORTED TO THE COMPANY DURING THE POLICY PERIOD OR EXTENDED REPORTING PERIOD, IF ANY. PLEASE READ CAREFULLY.

In consideration of the payment of the premium, in reliance upon the statements in the Declarations and Application made a part hereof and subject to all the terms of this Policy, the Company agrees with the **Named Insured** as follows:

SECTION I. COVERAGE - Insuring Agreement.

The Company agrees to pay on behalf of the **Insured,** subject to the limits of liability of this Policy, **Response Costs** that the **Insured** is legally obligated to pay for **Remedial Action** pursuant to the **Consent Decree** for a **Covered Location.** For this coverage to apply:

1. The **Named Insured** or the **Regulatory Agency** must make a written **Remedial Action Claim** for **Response Costs** to the Company during the **Policy Period**; and

2. The **Named Insured** or the **Regulatory Agency** must routinely report the **Response Costs** to the Company in a timely manner during the **Policy Period**.

SECTION II. EXCLUSIONS

This insurance does not apply to expenses, losses, liabilities, or damages of any kind incurred by, accruing to, or alleged to be liabilities of the **Insured**, by reason of:

A. Any criminal or civil penalties imposed by reason of the violation of any law or regulation.

B. Any third-party claims for **Bodily Injury** or **Property Damage**.

C. Any expenses, charges or costs resulting from the defense and/or investigation of any liability or obligation for **Response Costs** hereunder. However, this exclusion shall not apply to any costs or charges for investigations required for compliance with the **Remedial Action** at the **Covered Location** including but not limited to investigation of groundwater quality, hydrogeology, and chemical fate and transport, and remediation of soil and/or groundwater.

SECTION III. CLAIMS PROVISIONS

Any notices required by these conditions shall be sent to:

Saturn Insurance Inc.
c/o Willis Management (Vermont), Ltd.
100 Bank Street - Suite 500
Burlington, VT 05401

A. The Company, upon receipt of a **Remedial Action Claim**, shall review and issue payment as directed by the **Regulatory Agency** for all undisputed **Response Costs** within thirty (30) days of receipt of the **Remedial Action Claim** and all necessary information verifying the amount of the **Response Costs** for which reimbursement is being sought. The Company further agrees to notify the **Insured** and the **Regulatory Agency** in writing within thirty (30) days of receipt of any **Remedial Action Claim** made for **Response Costs** what amount, if any, of the **Remedial Action Claim** is in dispute and what back up information is needed to resolve the dispute. The Company, the **Insured**

and the **Regulatory Agency** agree to cooperate to resolve any dispute, and if a dispute cannot be resolved promptly, to submit the same to binding arbitration upon the request of the **Insured** on or after the expiration of thirty (30) days after the submission of any statement or bill of expenditures for **Response Costs** by the **Regulatory Agency**, which arbitration shall be conducted, in accordance with the rules and regulations outlined in the American Arbitration Association guidelines.

B. The Company may only disburse those funds from the Policy that the **Regulatory Agency** approves in writing.

C. In the event of **Financial Default** by the **Insured** at a **Covered Location** and upon written direction of the **Regulatory Agency**, the Company guarantees that funds, up to the **Response Costs Face Amount** shown in the Declarations for the same **Covered Location**, will be available to pay **Response Costs** for such **Covered Location** to such party or parties as the **Regulatory Agency** specifies.

D. The funds from the Policy identified in the Declarations as **Response Costs** will be utilized solely for the purpose of conducting **Remedial Action** at the specified **Covered Location**.

SECTION IV. DEFINITIONS

A. **Additional Named Insureds** means all persons or entities designated as such in Item 1 of the Declarations.

B. **Bodily Injury** means bodily injury, sickness, disease, fear of sickness or disease, mental anguish and mental injury, emotional distress, psychic injury, or disability including care, loss of services or death resulting therefrom.

C. **Consent Decree** means the following Decree(s):

1. Consent Decree, U.S. v. Ashland, Inc. et al, Civ. No. **[ ]** (C.D. Cal., **[Date]**).

D. **Covered Location** means any facility specifically identified in Item 5. of the Declarations, or any other location specifically endorsed onto this Policy as a **Covered Location**.

E. **Financial Default** means the failure of the **Insured** to perform the **Remedial Action(s)** at a **Covered Location** as required by the applicable law and the applicable **Consent Decree**.

F. **Insured** means the **Named Insured**, all **Additional Named Insureds** and any trustee, principal, member, director, officer, partner or employee thereof while acting within the scope of his/her duties as such, and any person or entity designated as an additional insured by an endorsement issued to form a part of this Policy.

G. **Named Insured** means the person or entity designated as such in Item 1 of the Declarations.

H. **Policy Aggregate Face Amount** means the maximum limit of liability that the Company will pay for all **Response Costs** for all **Covered Location**(s) designated in the Declarations.

I. **Policy Period** means the period set forth in Item 3 of the Declarations, or any shorter period arising as a result of cancellation of this Policy.

J. **Property Damage** means:

1. physical injury to or destruction of tangible property, including the personal property of third parties; or
2. loss of use of such property that has not been physically injured or destroyed; or
3. diminished third party property value.

K. **Regulatory Agency** means the U.S. Environmental Protection Agency (EPA) or any agency that becomes responsible for the supervision of **Remedial Action.**

L. **Remedial Action** means those measures or actions necessary to complete **Work** specified in the **Consent Decree**.

M. **Remedial Action Claim** means a request by the **Insured**, or by the **Regulatory Agency** in the event of **Financial Default**, for payment of **Response Costs**, for which the **Insured** is liable, by reason of a **Remedial Action** at a **Covered Location** in accordance with the **Consent Decree** provided that such request is first submitted in writing to the Company during the **Policy Period.**

N. **Response Costs** mean all costs associated with the development and implementation of a **Remedial Action** including all direct and indirect capital costs, engineering costs, and annual operation, maintenance and monitoring costs. Such costs, when applicable, shall include, without limitation, costs for preparation of plans specified in the **Consent Decree**, investigation, sampling and analysis, remedial design, construction of all facilities and process equipment, labor, materials, construction equipment and services, land purchase, land preparation/development, relocation expenses, systems start up and testing, facility operation, maintenance and repair, continuous effectiveness monitoring, periodic site condition reviews, and legal, administrative, over site and capital costs.

O. **Response Costs Face Amount** means the Company's maximum limit of liability for **Response Costs** for the specific **Covered Location** as designated in the Declarations.

P. **Work** had the meaning as defined in the **Consent Decree**.

SECTION V. LIMIT OF LIABILITY AND DEDUCTIBLE

A. With respect to the scheduled **Covered Location** shown in the Declarations, the Company's total liability for all **Response Costs** shall not exceed the limit of liability shown in the Schedule as the **Policy Aggregate Face Amount**.

B. Subject to subsection (A) above, the maximum Policy liability for **Response Costs** at the scheduled **Covered Location** shall not exceed the **Response Costs Face Amount** regardless of the number of:

1. facilities shown in the Declarations;
2. **Insureds** under this policy; or
3. **Claims** made or suits brought.

C. The company shall pay any applicable deductible amount and upon notification to the **Insured** or the **Insured**'s representative of such payment, the **Insured** shall promptly reimburse the Company for the amount so paid.

SECTION VI. CONDITIONS

A. **Inspection and Audit** - The Company shall be permitted but not obligated to inspect, sample and monitor on a continuing basis a scheduled **Covered Location** at any time. Neither the Company's right to make inspections, sample and monitor, nor the actual undertaking thereof nor any report thereon, shall constitute an undertaking, on behalf of the **Insured** or others, to determine or warrant that the **Covered Location** or the operations at the **Covered Location** are safe, healthful or conform to acceptable engineering practice or are in compliance with any law, rule or regulation. The Company or its designee may examine and audit the **Insured**'s books and records at any time during the **Policy Period** and extensions thereof, as far as they relate to the subject matter of this

insurance, and within any periods of **Remedial Action** for which coverage is provided whether Insurance of this Policy has expired.

B. Cancellation - The Company may not cancel, terminate or fail to renew the policy except for failure to pay the premium. The automatic renewal of the policy must, at a minimum, provide the **Insured** with the option of renewal at the face amount of the expiring policy. If there is a failure to pay the premium, the Company may elect to cancel, terminate, or fail to renew the Policy by sending notice by certified mail to the **Insured** and the **Regulatory Agency**. Cancellation, termination, or failure to renew may not occur, however, during the one hundred twenty (120) days beginning at the receipt of the notice by both the **Regulatory Agency** and the **Insured** as evidenced by return receipt. Cancellation, termination or failure to renew may not occur and the Policy will remain in full force and effect in the event that on or before the date of expiration:

1. The **Insured** is named as a debtor in a voluntary or involuntary proceeding under Title II (Bankruptcy), US Code; or

2. The premium due is paid in full.

C. Representations - By acceptance of this Policy, the **Named Insured** agrees that the statements in the Declarations and Application(s) are their representations, that this Policy is issued in reliance upon the truth of such representations, and that this Policy embodies all agreements existing between the **Named Insured** and the Company or any of its agents relating to this insurance.

D. Action Against Company - No third-party action shall lie against the Company, unless as a condition precedent thereto, there shall have been full compliance with all of the terms of this Policy, nor until the amount of the **Insured**'s obligation to pay shall have been finally determined either by judgment against the **Insured** after actual trial, expedited declaratory proceeding or by written agreement of the **Insured,** the claimant or **Regulatory Agency** and the Company, as applicable.

Any person or organization or the legal representative thereof who has secured such judgment or written agreement shall thereafter be entitled to recover under this Policy to the extent of the insurance afforded by this Policy. No person or organization shall have any right under this Policy to join the Company as a party to any action against the **Insured** to determine the **Insured**'s liability, nor shall the Company be impleaded by the **Insured** or his legal representative. Bankruptcy or insolvency of the **Insured** or of the **Insured**'s estate shall not relieve the Company of any of its obligations hereunder.

E. Changes - Notice to any agent or knowledge possessed by any agent or by any other person shall not effect a waiver or a change in any part of this Policy or estop the Company from asserting any right under the terms of this Policy; nor shall the terms of this Policy be waived or changed, except by endorsement issued to form a part of this Policy.

F. Other Insurance - This insurance is primary with respect to other valid and collectible insurance available to the **Named Insured**.

G. Mutual Construction – The Company and all **Insured** agree that the rule of contract construction that ambiguities are to be construed against the drafter shall not apply to any dispute arising under this Policy. Any such ambiguity shall be construed to give effect to the mutual intent of the parties as expressed herein.

H. Warranties – The Company has issued this policy to provide financial assurance for **Remedial Action** for scheduled **Covered Location**(s). The Company hereby warrants that this Policy is to provide financial assurance for **Remedial Action** at the **Covered Location** in accordance with the **Consent Decree**.

DRAFT

SECTION VII. SERVICE OF SUIT

It is agreed that in the event of any dispute under the Policy in which the **Regulatory Agency** or the **Named Insured** is a party, the Company, at the request of the **Regulatory Agency** or the **Named Insured**, will submit to the jurisdiction of the United States District Court, in the state where the insured **Covered Location** is located. It is further agreed that service of process in such suit may be made upon Counsel, Legal Department, Saturn Insurance Inc., c/o Willis Management (Vermont), Ltd., 100 Bank Street - Suite 500, Burlington, VT 05401, or his or her representative, and that in any suit instituted against the Company upon this Policy, the Company, will abide by the final decision of such court or of any appellate court in the event of any appeal.

SECTION VIII. CHOICE OF LAW

This Policy will be governed by and construed under the laws of the State of Vermont without regard to principles of conflicts of laws.

IN WITNESS WHEREOF, the Company has caused this Policy and the Declarations page to be signed by its duly authorized representatives or countersigned in states where applicable.

SATURN INSURANCE INC.

By:_____
Its duly authorized representative

DRAFT

Saturn Insurance Inc.
100 Bank Street - Suite 200 500
Burlington, VT 05401
"the Company"

Endorsement #1

Covered Location(s)

The Covered Location(s) referred to in Item 5 of the Declarations are as follows:

5. Covered Location(s):

Cooper Drum Company Superfund Site
9316 South Atlantic Avenue,
South Gate, CA

U.S. EPA ID Number CAD055753370

By: _____
Authorized Representative of
Saturn Insurance Inc.
100 Bank Street - Suite 500
Burlington, VT 05401

DRAFT

Saturn Insurance Inc.
100 Bank Street - Suite 500
Burlington, VT 05401
"the Company"

Endorsement #2

Limits of Insurance

The Limits of Insurance referred to in Item 6 of the Declarations are as follows:

6. Limits of Insurance:

Response Costs Face Amount:	$	558,000
Overall Policy Limit:	**$**	558,000

By: _____
Authorized Representative of
Saturn Insurance Inc.
100 Bank Street - Suite 500
Burlington, VT 05401

[Lloyds Bank plc New York Branch letterhead]

IRREVOCABLE STANDBY LETTER OF CREDIT

IRREVOCABLE STANDBY LETTER OF CREDIT NUMBER: [**insert number**]

ISSUANCE DATE: [**insert date**]

MAXIMUM AMOUNT: $[**insert dollar amount**]

APPLICANT:
[**Insert name of PRP/Settling Defendant**]
[**Insert contact person(s), title(s), and contact information (address, phone, email, etc.)**]

BENEFICIARY:
U.S. Environmental Protection Agency Region [**insert number**]
c/o [**insert appropriate Regional official such as "Superfund Division Director"**]
[**Insert contact information (address, phone, email, etc.)**]

Dear Sir or Madam:

We hereby establish our Irrevocable Standby Letter of Credit No. [**insert number**] in your favor, at the request and for the account of [**insert name of PRP/Settling Defendant**] (the "Applicant"), in the amount of $[**insert amoun**t] (the "Maximum Amount"). We hereby authorize you, the United States Environmental Protection Agency (the "Beneficiary"), to draw at sight on us, [**insert name of issuing institution**], an aggregate amount equal to the Maximum Amount upon presentation of:

(1) Your sight draft, bearing reference to this Letter of Credit No. [**insert number**] (which may, without limitation, be presented in the form attached hereto as Exhibit A); and

(2) Your signed statement reading as follows: "I certify that the amount of the draft is payable pursuant to that certain [**insert as appropriate:** "Consent Decree," "Administrative Settlement Agreement and Order on Consent," or "Settlement Agreement"], dated [**insert date**], [**insert as appropriate:** civil action number for consent decrees or EPA docket number for administrative agreements], between the United States and [**insert settling parties**], entered into by the parties thereto in accordance with the authority of the Comprehensive Environmental Response, Compensation, and Liability Act, 42 U.S.C. §§ 9601-9675, relating to the [**insert site name [operable unit]**]."

This letter of credit is effective as of [**insert issuance date**] and shall expire on [**insert date that is at least 1 year later**], but such expiration date shall be automatically extended for a period of

[**insert period of at least 1 year**] on [**insert date that is at least 1 year later**] and on each successive expiration date, unless, at least 120 days before the current expiration date, we notify both you and the Applicant by certified mail or overnight courier that we have decided not to extend this letter of credit beyond the current expiration date. In the event you are so notified, any unused portion of the credit shall immediately thereupon be available to you upon presentation of your sight draft for a period of at least 120 days after the date of receipt by both you and the Applicant of such notification, as shown on signed return receipts.

All notifications, requests, and demands required or permitted hereunder shall be given in writing to us at 1095 Avenue of the Americas, 34th Floor, New York, New York, 10036 Attention: Letter of Credit Department.

Multiple and partial draws on this letter of credit are expressly permitted, up to an aggregate amount not to exceed the Maximum Amount. Whenever this letter of credit is drawn on, under, and in compliance with the terms hereof, we shall duly honor such draft upon presentation to us, and we shall deposit the amount of the draft in immediately available funds directly into such account or accounts as may be specified in accordance with your instructions.

All banking and other charges under this letter of credit are for the account of the Applicant.

This letter of credit is subject to the Uniform Customs and Practice for Documentary Credits 2007 Revision, International Chamber of Commerce Publication No. 600, and as to matters not covered thereby by the laws of the State of New York.

Very Truly Yours,
Lloyds Bank plc

Date: _____

By [signature]: _____ By _____

Printed name: _____ Printed name: _____

Title: _____ Title: _____

Exhibit A - Form of Sight Draft
[EPA LETTERHEAD]

SIGHT DRAFT

TO: Lloyds Bank plc
Letter of Credit Department
1095 Avenue of the Americas, 34th Floor
New York, NY 10036

RE: Letter of Credit No. [**insert number**]

DATE: [**Insert date on which draw is made**]

TIME: [**Insert time of day at which draw is made**]

This draft is drawn under your Irrevocable Standby Letter of Credit No. [**insert number**]. I certify that the amount of the draft is payable pursuant to that certain [**insert as appropriate:** "Consent Decree," "Administrative Settlement Agreement and Order on Consent," or "Settlement Agreement"], dated [**insert date**], [**insert as appropriate:** civil action number for consent decrees, or EPA docket number for administrative agreements], between the United States and [**insert settling parties**], entered into by the parties thereto in accordance with the authority of the Comprehensive Environmental Response, Compensation, and Liability Act, 42 U.S.C. §§ 9601-9675, relating to the [**insert site name [operable unit]**]. Pay to the order of the United States Environmental Protection Agency, in immediately available funds, the amount of $[**insert dollar amount of draw**] or, if no amount certain is specified, the total balance remaining available under such Irrevocable Standby Letter of Credit.

Pay such amount as is specified in the immediately preceding paragraph by [**insert payment instructions as appropriate, such as:** "Fedwire EFT, referencing Site/Spill ID Number [**insert number**] [and DJ Number [**insert number**]]. The Fedwire EFT payment must be sent as follows:

Federal Reserve Bank of New York
ABA = 021030004
Account = 68010727
SWIFT address = FRNYUS33
33 Liberty Street
New York NY 10045
Field Tag 4200 of the Fedwire message should read [D 68010727
Environmental Protection Agency]"]

The total amount paid shall be deposited by EPA in the [**insert site name [operable unit]**]

Special Account to be retained and used to conduct or finance response actions at or in connection with the site, or to be transferred by EPA to the EPA Hazardous Substance Superfund.

This Sight Draft has been duly executed by the undersigned, an authorized representative or agent of the United States Environmental Protection Agency, whose signature hereupon constitutes an endorsement.

By [signature]: _____
Printed name: _____
Title: _____
Address: _____
Contact information: _____