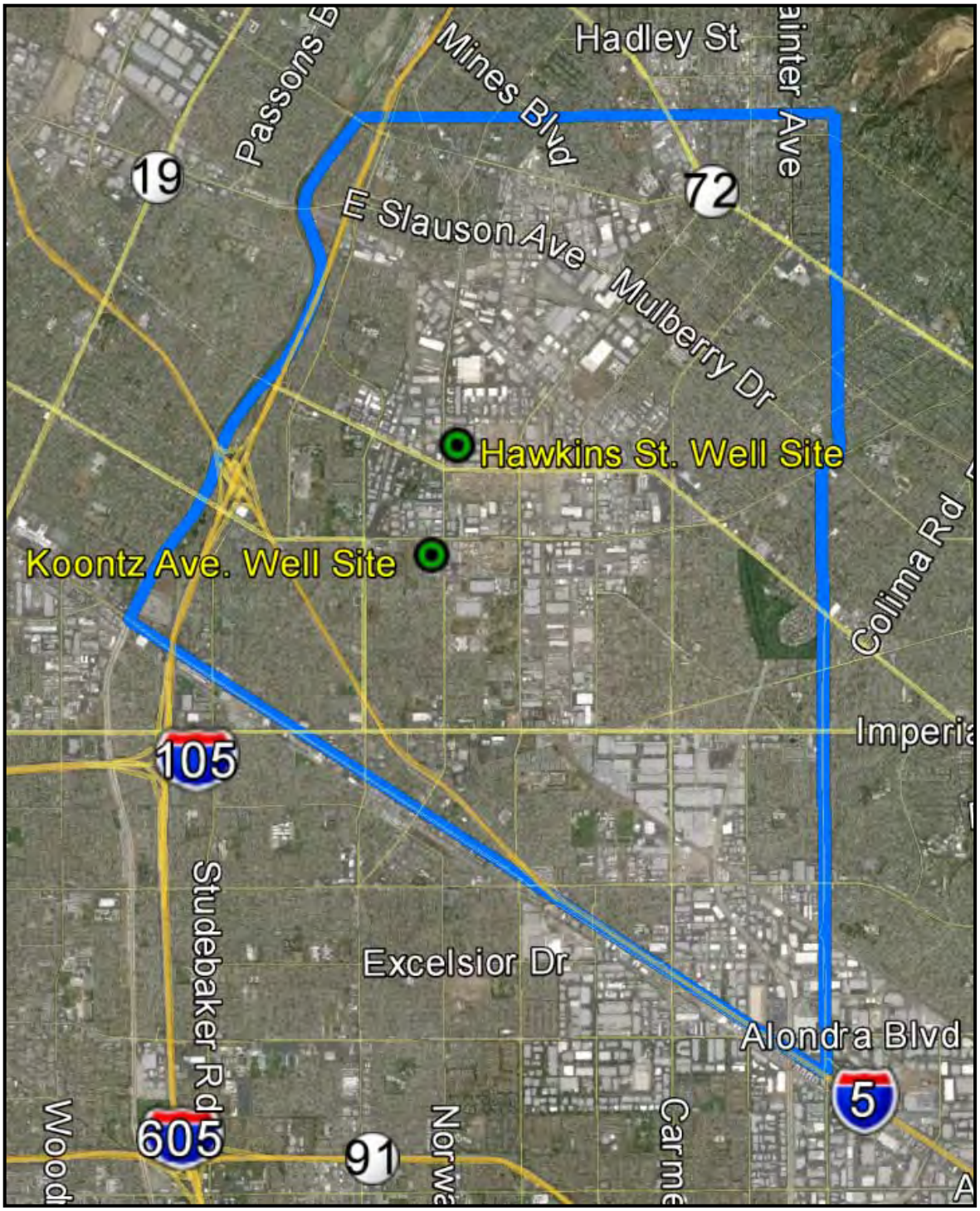

N

0 0.5 1.0 1.5 miles

Figure 1
General Location of Project Wells
Central Basin Groundwater Contamination Study
Groundwater Monitoring Wells Project
WRD Project No. 006050

Figure 1
Proposed WRD Groundwater Monitoring Wells

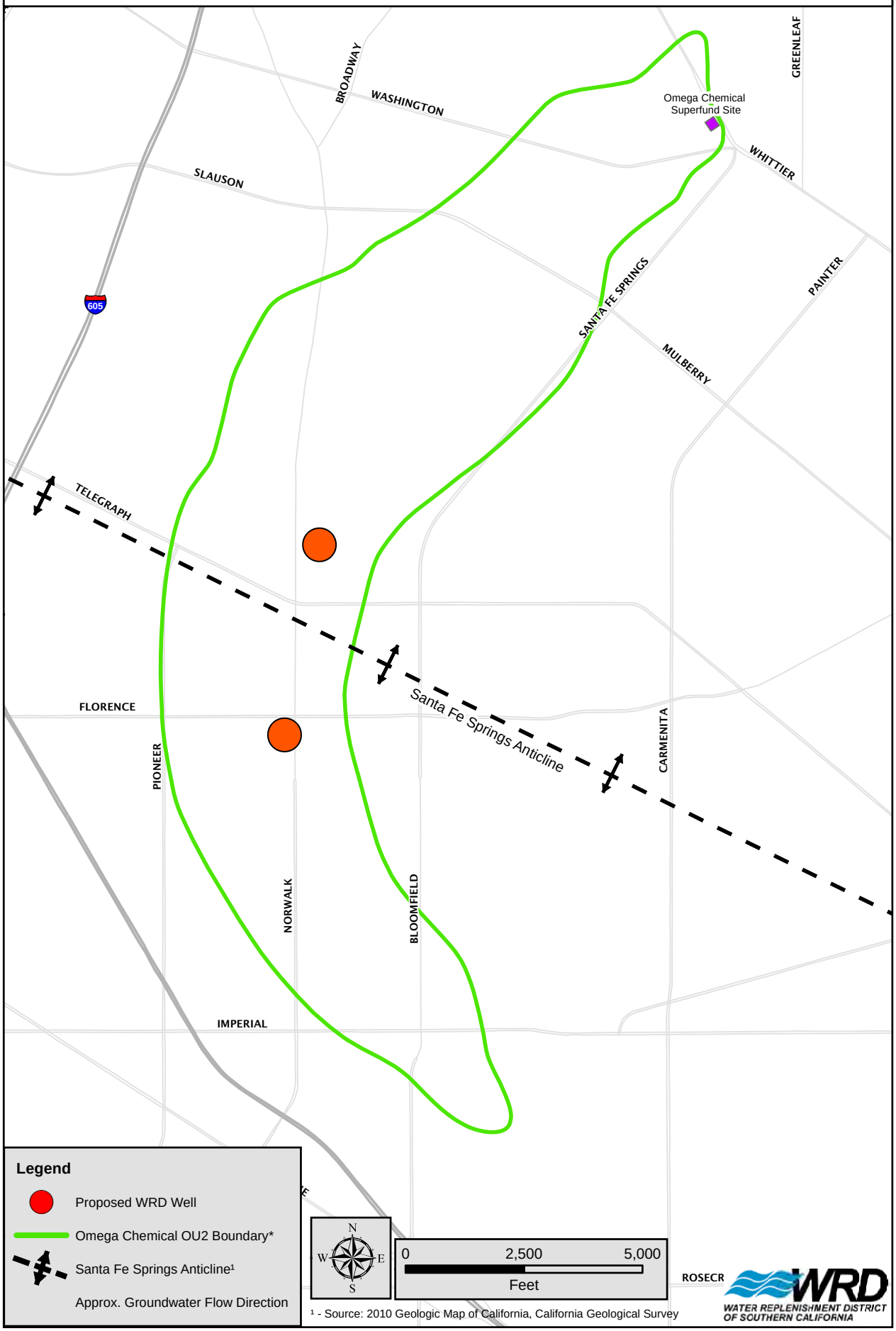

¹ - Source: 2010 Geologic Map of California, California Geological Survey

*Boundary outline from USEPA & CH2M HILL, May 2013

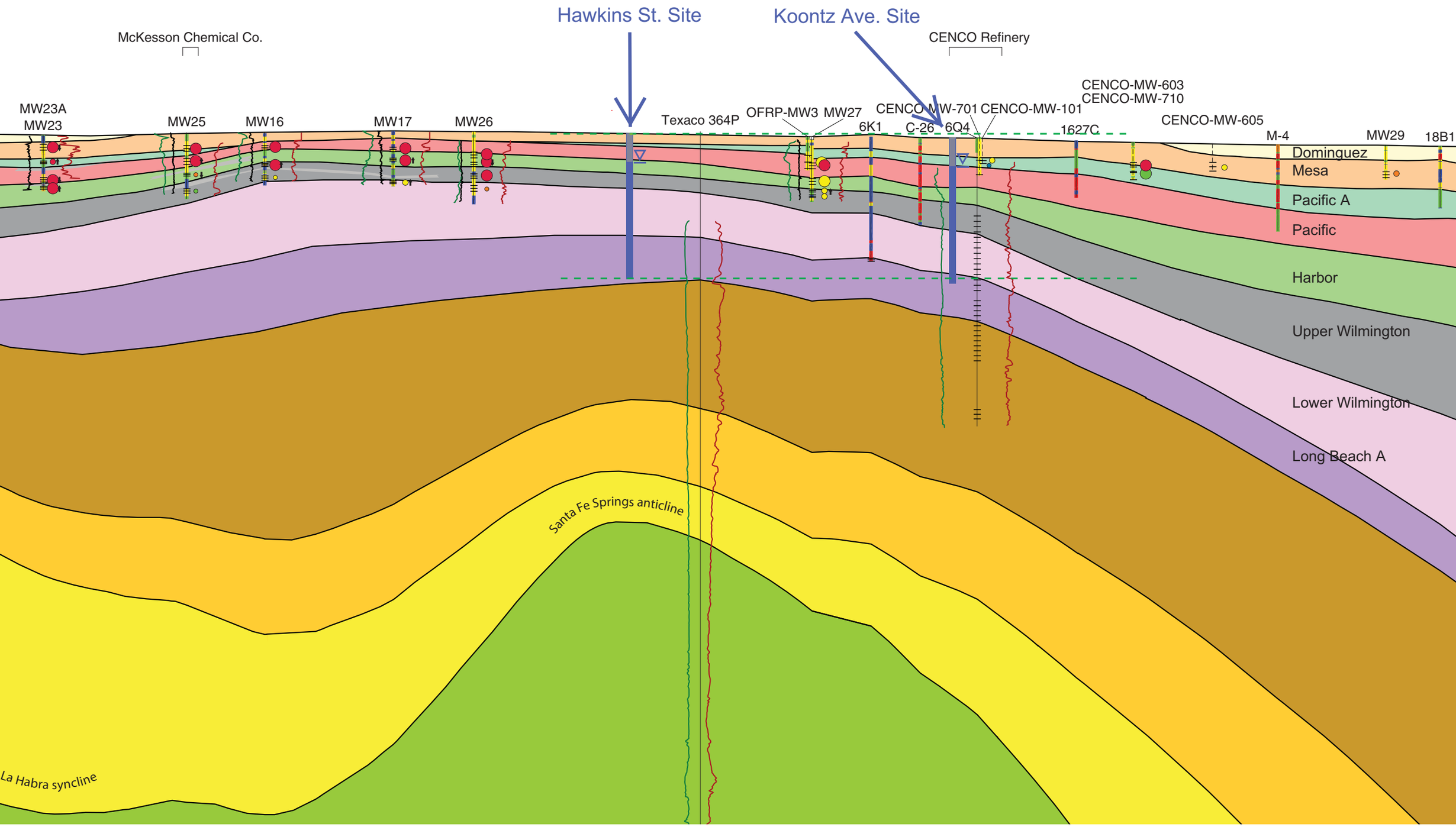
Hawkins St. Site
Koontz Ave. Site
McKesson Chemical Co.
CENCO Refinery
MW23A
MW23
MW25
MW16
MW17
MW26
Texaco 364P
OFRP-MW3
MW27
6K1
C-26
CENCO-MW-701
6Q4
CENCO-MW-101
1627C
CENCO-MW-603
CENCO-MW-710
CENCO-MW-605
M-4
MW29
18B1
Dominguez
Mesa
Pacific A
Pacific
Harbor
Upper Wilmington
Lower Wilmington
Long Beach A
Santa Fe Springs anticline
La Habra syncline

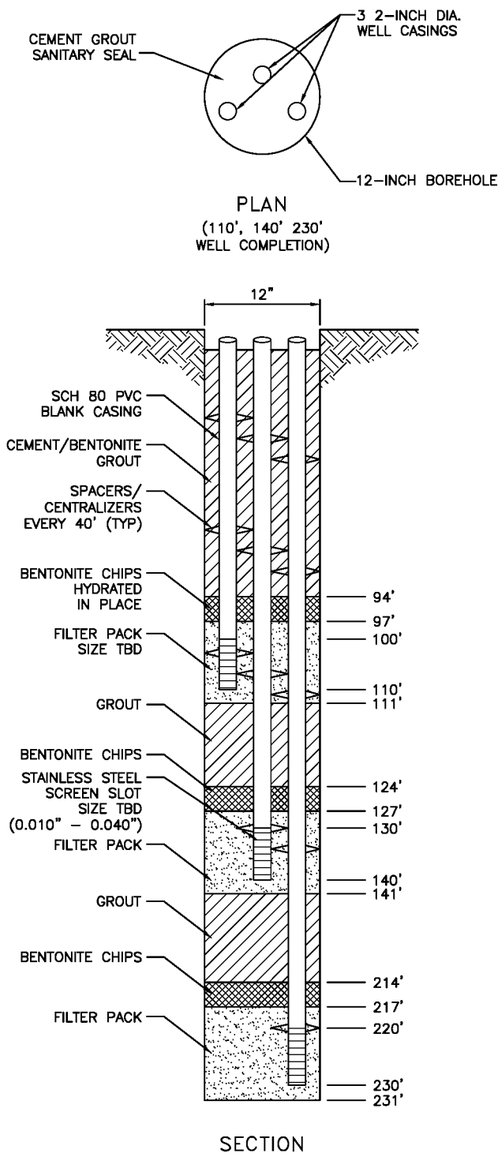

TRIPLE COMPLETION WELL DETAIL 1

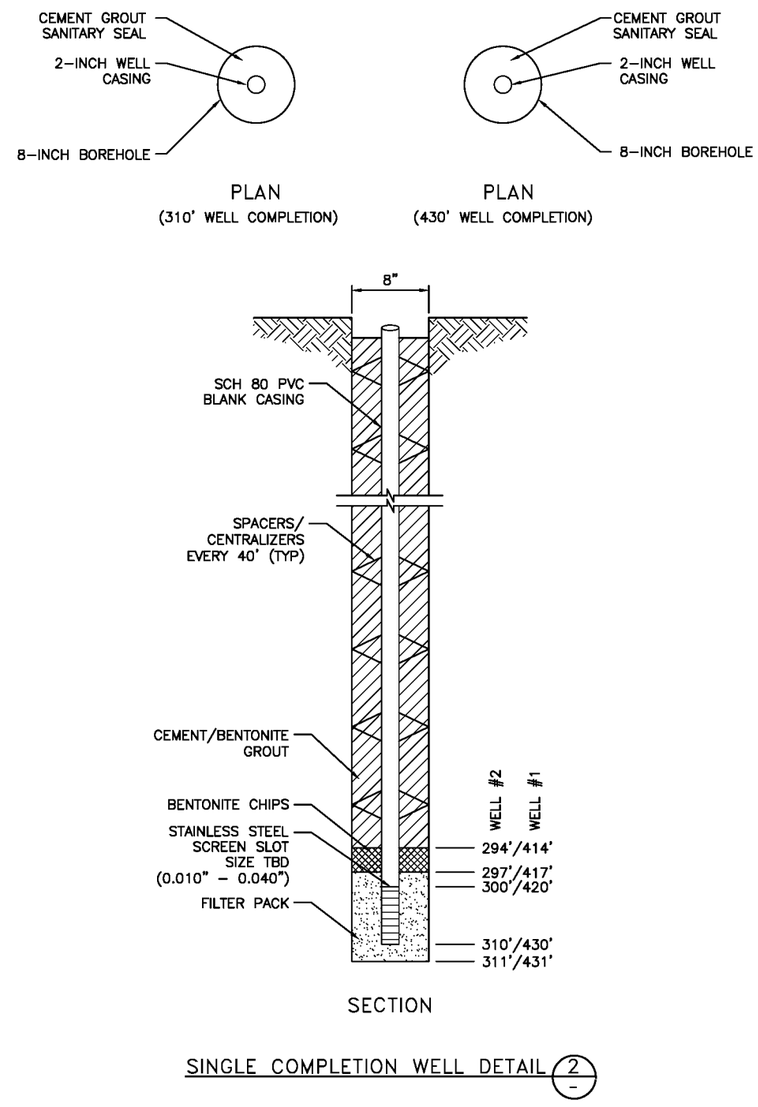

SINGLE COMPLETION WELL DETAIL 2

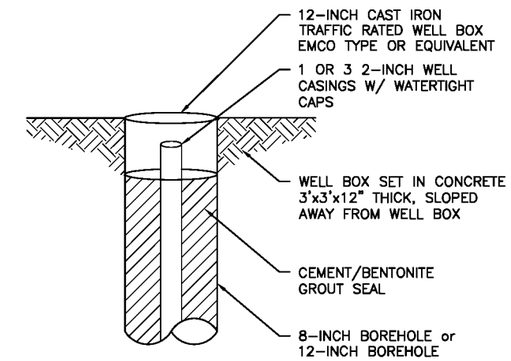

WELL SURFACE COMPLETION DETAIL 3

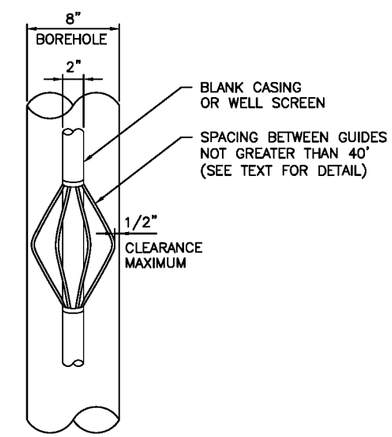

TYPICAL CASING CENTRALIZER DETAIL 4

REV	DATE	REVISION DESCRIPTION	DRAWN	DRAFT CHK	DESIGNED	ENG CHK	APPROVED	CUSTOMER	REF DRAWING No	REFERENCE DRAWING TITLE

D SHEET | SCALE NOT TO SCALE

OneWay™ to zero harm

WORLEYPARSONS PROJECT No. 308038-06271

ENGINEERING AND PERMIT STAMPS (As Required)

CUSTOMER

"This drawing is prepared solely for the use of the contractual customer of WorleyParsons Canada Ltd. and WorleyParsons Canada Ltd. assumes no liability to any other party for any representation contained in this drawing."

WorleyParsons resources & energy

WATER REPLENISHMENT DISTRICT
CENTRAL BASIN
GROUNDWATER MONITORING WELLS
WELL DETAILS

DRG No DRGNUMBER REV REV

TB_VERSION

LOCATION: C:\USERS\CARLA.DIXIE\DOCUMENTS\TEMP\MARK T-MONITORING WELL\WELL DETAIL.DWG
USER NAME: carla.dixie
PLOT DATE & TIME: 20/3/2014 1:01:01 PM
SAVE DATE & TIME: 19/3/2014 12:58:08 PM

Koontz Well Site, Santa Fe Springs, CA

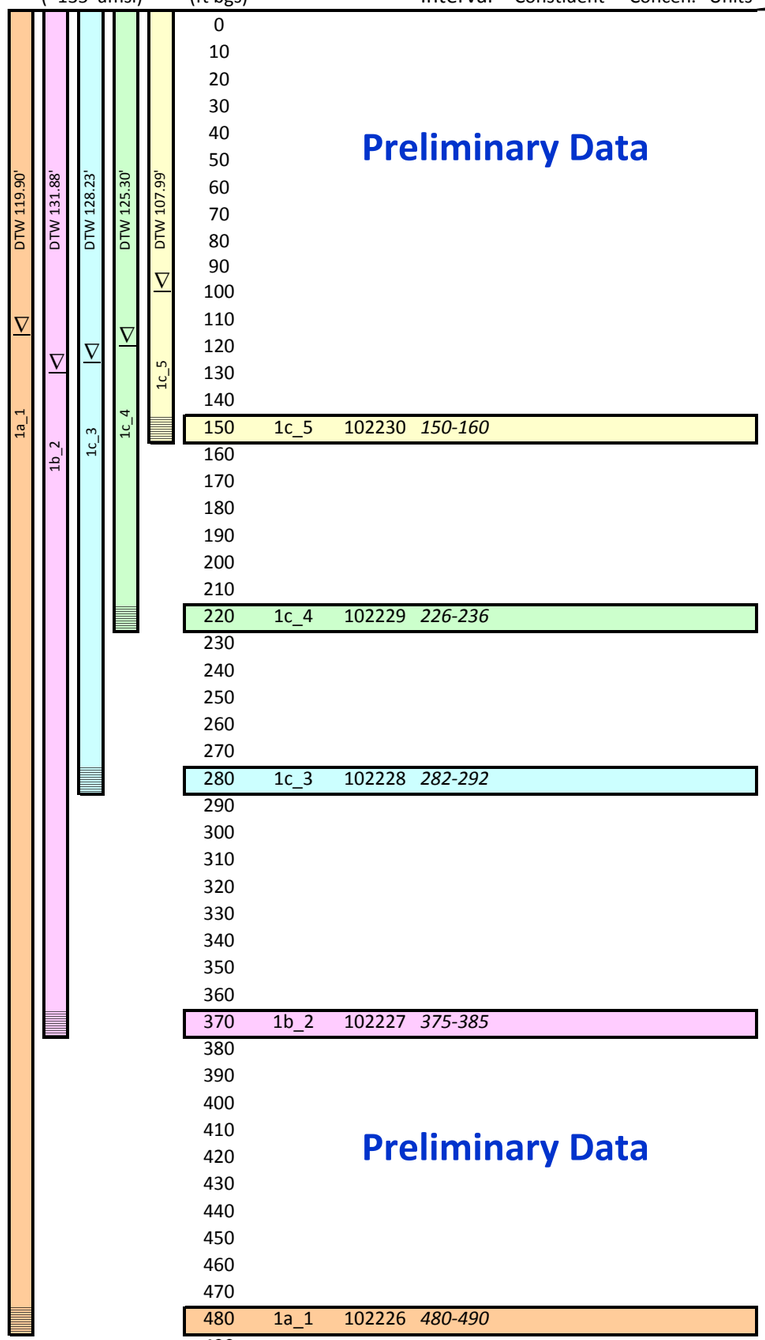

Surface Elevation (~135' amsl)

Depth (ft bgs)	Well ID	WRDID	Screen Interval	Analytical Results Constiuent	Concen.	Units
0						
10						
20						
30						
40						
50						
60						
70						
80						
90						
100						
110						
120						
130						
140						
150	1c_5	102230	*150-160*			
160						
170						
180						
190						
200						
210						
220	1c_4	102229	*226-236*			
230						
240						
250						
260						
270						
280	1c_3	102228	*282-292*			
290						
300						
310						
320						
330						
340						
350						
360						
370	1b_2	102227	*375-385*			
380						
390						
400						
410						
420						
430						
440						
450						
460						
470						
480	1a_1	102226	*480-490*			
490						
500						

Preliminary Data

Preliminary Data

Hawkins Well Site, Santa Fe Springs, CA

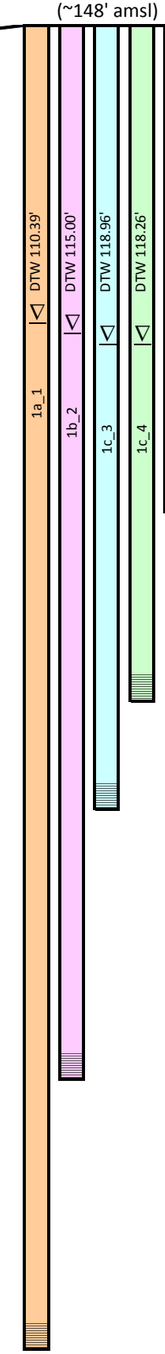

Surface Elevation (~148' amsl)

Depth (ft bgs)	Well ID	WRDID	Screen Interval	Analytical Results Constiuent	Concen.	Units
0						
10						
20						
30						
40						
50						
60						
70						
80						
90						
100						
110						
120						
130						
140						
150						
160						
170	1c_5	102235	*168-178*			
180						
190						
200						
210						
220						
230						
240	1c_4	102234	*242-252*			
250						
260						
270						
280	1c_3	102233	*286-296*			
290						
300						
310						
320						
330						
340						
350						
360						
370						
380	1b_2	102232	*378-388*			
390						
400						
410						
420						
430						
440						
450						
460						
470						
480	1a_1	102231	*478-488*			
490						
500						
510						

Preliminary Data

Preliminary Data

Koontz Well Site, Santa Fe Springs, CA

Surface Elevation (~135' amsl)

DTW 119.90' (1a_1); DTW 131.88' (1b_2); DTW 128.23' (1c_3); DTW 125.30' (1c_4); DTW 107.99' (1c_5)

Preliminary Data

Depth (ft bgs)	Well ID	WRDID	Screen Interval	Analytical Results Constiuent	Concen.	Units
0						
10						
20						
30						
40						
50						
60						
70						
80				CrVI	<0.02	µg/L
90				1,1-DCA	**18**	µg/L
100				1,1-DCE	**230**	µg/L
110				1,2-DCA	**3.9**	µg/L
120				1,4-Dioxane	**22**	µg/L
130				*cis* 1,2-DCE	**69**	µg/L
140				PCE	**120**	µg/L
150	1c_5	102230	*150-160*	*trans* 1,2-DCE	**1.7**	µg/L
160				TCE	**190**	µg/L
170				Freon 11	**1.0**	µg/L
180				Freon 113	**7.2**	µg/L
190				VC	**0.64**	µg/L
200				CrVI	<0.02	µg/L
210				1,1-DCA	**0.97**	µg/L
220	1c_4	102229	*226-236*	1,1-DCE	**6.0**	µg/L
230				1,4-Dioxane	**1.5**	µg/L
240				*cis* 1,2-DCE	**6.6**	µg/L
250				*trans* 1,2-DCE	**2.9**	µg/L
260				TCE	**3.8**	µg/L
270				CrVI	<0.02	µg/L
280	1c_3	102228	*282-292*	1,1-DCA	**1.2**	µg/L
290				1,1-DCE	**19**	µg/L
300				1,4-Dioxane	**2.6**	µg/L
310				*cis* 1,2-DCE	**8.0**	µg/L
320				PCE	**22**	µg/L
330				TCE	**63**	µg/L
340						
350						
360						
370	1b_2	102227	*375-385*	CrVI	<0.02	µg/L
380						
390						
400						
410						
420						
430						
440						
450						
460						
470						
480	1a_1	102226	*480-490*	CrVI	**0.026**	µg/L
490						
500						

Preliminary Data

Hawkins Well Site, Santa Fe Springs, CA

Surface Elevation (~148' amsl)

DTW 110.39' (1a_1); DTW 115.00' (1b_2); DTW 118.96' (1c_3); DTW 118.26' (1c_4); DTW 118.76' (1c_5)

Preliminary Data

Depth (ft bgs)	Well ID	WRDID	Screen Interval	Analytical Results Constiuent	Concen.	Units
0						
10						
20						
30						
40						
50						
60						
70						
80						
90						
100						
110				CrVI	**0.22**	µg/L
120				1,1-DCA	**18**	µg/L
130				1,1-DCE	**100**	µg/L
140				1,2-DCA	**2.6**	µg/L
150				1,4-Dioxane	**14**	µg/L
160				*cis* 1,2-DCE	**58**	µg/L
170	1c_5	102235	*168-178*	PCE	**80**	µg/L
180				*trans* 1,2-DCE	<0.5	µg/L
190				TCE	**100**	µg/L
200				Freon 11	<0.5	µg/L
210				Freon 113	<0.5	µg/L
220				VC	**0.43**	µg/L
230						
240	1c_4	102234	*242-252*	CrVI	**0.071**	µg/L
250						
260						
270						
280	1c_3	102233	*286-296*	CrVI	**0.043**	µg/L
290						
300						
310						
320						
330						
340						
350						
360						
370						
380	1b_2	102232	*378-388*	CrVI	**0.021**	µg/L
390						
400						
410						
420						
430						
440						
450						
460						
470						
480	1a_1	102231	*478-488*	CrVI	<0.02	µg/L
490						
500						
510						