SFUND RECORDS CTR
2462-00226

SFUND RECORDS CTR
110178

Lockheed Martin Corporation
Corporate Environment, Safety & Health
7921 Southpark Plaza, Suite 210 Littleton, CO 80120

LOCKHEED MARTIN

November 28, 2000

Mr. Gerard J. Thibeault
Executive Officer
California Regional Water Quality Control Board
Santa Ana Region
3737 Main Street, Suite 500
Riverside, California 92501-3339

Dear Mr. Thibeault:

I am writing to report analytical results for water discharges for the month of October 2000 as required under NPDES permit CAG998001 and subsequent modifications to this permit.

Permitted discharges occurred during October 2000, and were associated with perchlorate pilot treatment system operation at the "Gage New 6" well. 546,624 gallons of groundwater were discharged from October 1 through October 31, 2000.

Attachment 1 summarizes daily discharges and analytical results. The water was discharged to a dry portion of the Santa Ana Wash east of Tippecanoe Avenue. The discharged water completely percolated into soil, never reaching any flowing portion of the Santa Ana River.

Attachment 2 summarizes the related laboratory analytical data. Please contact me at 303.971.1880 if you or your staff have any questions.

Sincerely,

Stephen Evanoff
Manager, Redlands Project

SE:eh

Attachments

c: See distribution

Distribution

Kevin Mayer (SFD-73)
U.S. Environmental Protection Agency
75 Hawthorne Street
San Francisco, CA 94105

Susan Beeson
California Regional Quality Control Board
Santa Ana Region

Kamron Saremi
California Regional Quality Control Board
Santa Ana Region

James H. O'Brien (w/o attachments)
Vice President
Lockheed Martin Corporation
7921 Southpark Plaza, Suite 210
Littleton, CO 80120

ATTACHMENT 1

Attachment 1.

NPDES Summary--October 2000

Constituent	10/02/00	10/03/00	10/04/00	10/05/00	10/06/00	10/08/00	10/09/00	10/10/00	10/11/00	10/12/00	10/13/00	10/15/00	10/16/00	10/17/00	10/18/00	10/19/00	10/20/00	10/22/00	10/23/00	10/24/00	10/25/00	10/26/00	10/27/00	10/29/00	10/30/00	10/31/00
Flow (gallons/day)	21,024	21,024	21,024	21,024	21,024	21,024	21,024	21,024	21,024	21,024	21,024	21,024	21,024	21,024	21,024	21,024	21,024	21,024	21,024	21,024	21,024	21,024	21,024	21,024	21,024	21,024
Oil and Grease (mg/l)	ND	na	na	na	na	na	na	na	na	ND	na	na	na	na	ND	na	na	na	na	na	ND	na	na	na	na	na
Sulfides (mg/l)	ND	na	na	na	na	na	na	na	na	ND	na	na	na	na	ND	na	na	na	na	na	ND	na	na	na	na	na
TPH (mg/l)	ND	na	na	na	na	na	na	na	na	ND	na	na	na	na	ND	na	na	na	na	na	ND	na	na	na	na	na
TCE (ug/l)[3]	ND	na	na	na	na	na	na	na	na	ND	na	na	na	na	ND	na	na	na	na	na	ND	na	na	na	na	na
pH (Effluent)	8.1	8.0	8.0	8.0	7.9	7.8	8.0	7.8	7.9	7.9	8.0	7.8	8.0	7.8	7.7	7.9	7.7	7.9	7.9	7.7	7.7	7.7	8.0	8.1	8.1	8.0
Perchlorate (ug/l)	ND	na	na	na	na	na	na	na	na	ND	na	na	na	na	ND	na	na	na	na	na	ND	na	na	na	na	na
Nitrate as NO_3 (mg/l)	9.8	na	na	na	na	na	na	na	na	24	na	na	na	na	26	na	na	na	na	na	31	na	na	na	na	na
DBCP (ug/l)	ND	na	na	na	na	na	na	na	na	ND	na	na	na	na	ND	na	na	na	na	na	ND	na	na	na	na	na
TSS (mg/l)	ND	na	na	na	na	na	na	na	na	ND	na	na	na	na	ND	na	na	na	na	na	ND	na	na	na	na	na

Notes:

1. The pilot perchlorate treatment plant did not operate on dates not listed; and/or no discharges occurred.
2. na=not analyzed.
3. All method volatile organic constituents ND (non-detect).
4. Weekly analysis of discharge water was granted by the RWQCB on 9/1/00.

ATTACHMENT 2

Weck Laboratories, Inc.
Environmental and Analytical Services - Since 1964

Report Date: *Friday, October 20, 2000*
Received Date: *Monday, October 02, 2000*
Log By: mr
Log Time: 13:05

Client: Earth Tech, Inc.
100 West Broadway, Suite 5000
Long Beach, CA 90802-4443
Attn.: Barry Molnaa

Phone: (562) 951-2129
FAX: (562) 951-2086

Project: LMC POP

P.O. #: 2000S-0086-LB9
Turnaround Time: Normal

CERTIFICATE OF ANALYSIS

Lab#: A006928-001 **Sample ID:** Discharge **Matrix:** Ground Water
Sampled By: Client **Date:** 10/2/00 **Time:** 10:00

Parameter	Result	Flag	Units	Dilution Factor	RL	Method	Analyzed	Worksheet #
Prep. P&T								
Dichlorodifluoromethane	ND		ug/L	1	1.0	EPA 524.2	10/2/00 rt	WS18260
Chloromethane	ND		ug/L	1	0.50	EPA 524.2	10/2/00 rt	WS18260
Vinyl chloride	ND		ug/L	1	0.50	EPA 524.2	10/2/00 rt	WS18260
Bromomethane	ND		ug/L	1	0.50	EPA 524.2	10/2/00 rt	WS18260
Chloroethane	ND		ug/L	1	0.50	EPA 524.2	10/2/00 rt	WS18260
Trichlorofluoromethane (Freon 11)	ND		ug/L	1	5.0	EPA 524.2	10/2/00 rt	WS18260
Trichlorotrifluoroethane (Freon 113)	ND		ug/L	1	10	EPA 524.2	10/2/00 rt	WS18260
1,1-Dichloroethene	ND		ug/L	1	0.50	EPA 524.2	10/2/00 rt	WS18260
Methylene chloride (Dichloromethane)	ND		ug/L	1	0.50	EPA 524.2	10/2/00 rt	WS18260
trans-1,2-Dichloroethene	ND		ug/L	1	0.50	EPA 524.2	10/2/00 rt	WS18260
Methyl tert-Butyl Ether	ND		ug/L	1	1.0	EPA 524.2	10/2/00 rt	WS18260
1,1-Dichloroethane	ND		ug/L	1	0.50	EPA 524.2	10/2/00 rt	WS18260
2-Butanone (Methyl ethyl ketone)	ND		ug/L	1	5.0	EPA 524.2	10/2/00 rt	WS18260
2,2-Dichloropropane	ND		ug/L	1	0.50	EPA 524.2	10/2/00 rt	WS18260
cis-1,2-Dichloroethene	ND		ug/L	1	0.50	EPA 524.2	10/2/00 rt	WS18260
Bromochloromethane	ND		ug/L	1	0.50	EPA 524.2	10/2/00 rt	WS18260
Chloroform	ND		ug/L	1	0.50	EPA 524.2	10/2/00 rt	WS18260
1,1,1-Trichloroethane	ND		ug/L	1	0.50	EPA 524.2	10/2/00 rt	WS18260
Carbon tetrachloride	ND		ug/L	1	0.50	EPA 524.2	10/2/00 rt	WS18260
1,1-Dichloropropene	ND		ug/L	1	0.50	EPA 524.2	10/2/00 rt	WS18260
Benzene	ND		ug/L	1	0.50	EPA 524.2	10/2/00 rt	WS18260
1,2-Dichloroethane	ND		ug/L	1	0.50	EPA 524.2	10/2/00 rt	WS18260
Trichloroethene (TCE)	ND		ug/L	1	0.50	EPA 524.2	10/2/00 rt	WS18260
1,2-Dichloropropane	ND		ug/L	1	0.50	EPA 524.2	10/2/00 rt	WS18260
Dibromomethane	ND		ug/L	1	0.50	EPA 524.2	10/2/00 rt	WS18260
Bromodichloromethane	ND		ug/L	1	0.50	EPA 524.2	10/2/00 rt	WS18260
cis-1,3-Dichloropropene	ND		ug/L	1	0.50	EPA 524.2	10/2/00 rt	WS18260
4-Methyl-2-pentanone (MiBK)	ND		ug/L	1	5.0	EPA 524.2	10/2/00 rt	WS18260
2-Chloroethylvinyl ether	ND		ug/L	1	1.0	EPA 524.2	10/2/00 rt	WS18260
Toluene	ND		ug/L	1	0.50	EPA 524.2	10/2/00 rt	WS18260
trans-1,3-Dichloropropene	ND		ug/L	1	0.50	EPA 524.2	10/2/00 rt	WS18260

14859 East Clark Avenue, City of Industry, California 91745-1396 (626) 336-2139 FAX (626) 336-2634
www.wecklabs.com

Client: Earth Tech, Inc.
Project Name: LMC POP

Report Date: *Friday, October 20, 2000*

CERTIFICATE OF ANALYSIS

Lab#: A006928-001 **Sample ID:** Discharge **Matrix:** Ground Water
Sampled By: Client **Date:** 10/2/00 **Time:** 10:00

Parameter	Result	Flag	Units	Dilution Factor	RL	Method	Analyzed		Worksheet #
1,1,2-Trichloroethane	ND		ug/L	1	0.50	EPA 524.2	10/2/00	rt	WS18260
Tetrachloroethene (PCE)	ND		ug/L	1	0.50	EPA 524.2	10/2/00	rt	WS18260
1,3-Dichloropropane	ND		ug/L	1	0.50	EPA 524.2	10/2/00	rt	WS18260
Dibromochloromethane	ND		ug/L	1	0.50	EPA 524.2	10/2/00	rt	WS18260
1,2-Dibromoethane (EDB)	ND		ug/L	1	0.50	EPA 524.2	10/2/00	rt	WS18260
Chlorobenzene	ND		ug/L	1	0.50	EPA 524.2	10/2/00	rt	WS18260
Ethyl benzene	ND		ug/L	1	0.50	EPA 524.2	10/2/00	rt	WS18260
m/p-Xylenes	ND		ug/L	1	0.50	EPA 524.2	10/2/00	rt	WS18260
o-Xylene	ND		ug/L	1	0.50	EPA 524.2	10/2/00	rt	WS18260
Styrene	ND		ug/L	1	0.50	EPA 524.2	10/2/00	rt	WS18260
Bromoform	ND		ug/L	1	0.50	EPA 524.2	10/2/00	rt	WS18260
Isopropylbenzene	ND		ug/L	1	0.50	EPA 524.2	10/2/00	rt	WS18260
Bromobenzene	ND		ug/L	1	0.50	EPA 524.2	10/2/00	rt	WS18260
1,1,2,2-Tetrachloroethane	ND		ug/L	1	0.50	EPA 524.2	10/2/00	rt	WS18260
1,2,3-Trichloropropane	ND		ug/L	1	0.50	EPA 524.2	10/2/00	rt	WS18260
n-Propyl benzene	ND		ug/L	1	0.50	EPA 524.2	10/2/00	rt	WS18260
2-Chlorotoluene	ND		ug/L	1	0.50	EPA 524.2	10/2/00	rt	WS18260
4-Chlorotoluene	ND		ug/L	1	0.50	EPA 524.2	10/2/00	rt	WS18260
1,3,5-Trimethylbenzene	ND		ug/L	1	0.50	EPA 524.2	10/2/00	rt	WS18260
tert-Butyl benzene	ND		ug/L	1	0.50	EPA 524.2	10/2/00	rt	WS18260
1,2,4-Trimethylbenzene	ND		ug/L	1	0.50	EPA 524.2	10/2/00	rt	WS18260
bis(2-Chloroethyl) Ether	ND		ug/L	1	5.0	EPA 524.2	10/2/00	rt	WS18260
sec-Butylbenzene	ND		ug/L	1	0.50	EPA 524.2	10/2/00	rt	WS18260
1,3-Dichlorobenzene	ND		ug/L	1	0.50	EPA 524.2	10/2/00	rt	WS18260
4-isopropyltoluene	ND		ug/L	1	0.50	EPA 524.2	10/2/00	rt	WS18260
1,4-Dichlorobenzene	ND		ug/L	1	0.50	EPA 524.2	10/2/00	rt	WS18260
1,2-Dichlorobenzene	ND		ug/L	1	0.50	EPA 524.2	10/2/00	rt	WS18260
n-Butylbenzene	ND		ug/L	1	0.50	EPA 524.2	10/2/00	rt	WS18260
1,2-Dibromo-3-chloropropane (DBCP)	ND		ug/L	1	1.0	EPA 524.2	10/2/00	rt	WS18260
1,2,4-Trichlorobenzene	ND		ug/L	1	0.50	EPA 524.2	10/2/00	rt	WS18260
Hexachlorobutadiene	ND		ug/L	1	0.50	EPA 524.2	10/2/00	rt	WS18260
Naphthalene	ND		ug/L	1	0.50	EPA 524.2	10/2/00	rt	WS18260
1,2,3-Trichlorobenzene	ND		ug/L	1	0.50	EPA 524.2	10/2/00	rt	WS18260
Total 1,3-Dichloropropene	ND		ug/L	1	0.50	EPA 524.2	10/2/00	rt	WS18260
Tert-amyl Methyl Ether	ND		ug/L	1	3.0	EPA 524.2	10/2/00	rt	WS18260
Ethyl tert-Butyl Ether	ND		ug/L	1	3.0	EPA 524.2	10/2/00	rt	WS18260
1,1,1,2-Tetrachloroethane	ND		ug/L	1	0.5	EPA 524.2	10/2/00	rt	WS18260
Nitrate as NO3	9.8		mg/L	1	0.20	EPA 300.0	10/2/00	kk	WS18515
Prep. ***SPE***									
Oil & Grease	ND		mg/L	1	5	EPA 1664	10/3/00	sl	WS18313
Prep. ***EPA 3510C***									
Diesel range hydrocarbons (C10-C23)	ND		mg/L	1	0.10	EPA 8015B	10/11/00	wm	WS18673
Prep. ***P&T***									
Gasoline range hydrocarbons (C6-C10)	ND		mg/L	1	0.10	EPA 8015B	10/10/00	tl	WS18713
Sulfide, dissolved	ND		mg/L	1	0.10	SM 4500S2 D	10/6/00	td	WS18381

14859 East Clark Avenue, City of Industry, California 91745-1396 (626) 336-2139 FAX (626) 336-2634
www.wecklabs.com

Weck Laboratories, Inc.
Environmental and Analytical Services - Since 1964

Client: Earth Tech, Inc.
Project Name: LMC POP

Report Date: *Friday, October 20, 2000*

CERTIFICATE OF ANALYSIS

Lab#: A006928-001 **Sample ID:** Discharge **Matrix:** Ground Water
Sampled By: Client **Date:** 10/2/00 **Time:** 10:00

Parameter	Result	Flag	Units	Dilution Factor	RL	Method	Analyzed		Worksheet #
Total Suspended Solids	ND		mg/L	1	5	EPA 160.2	10/6/00	aw	WS18426
Prep. *Direct Inj.*									
Perchlorate	ND		ug/L	1	4.0	EPA 314	10/4/00	dc	WS18356

Authorized Signature

ELAP # 1132
LACSD # 10143
AZ0526

Flags for Data Qualifiers:

B = Compound detected in the blank. Sample result equal or less than 10 times the concentration in the blank.
J = Estimated value, detected but below the reporting limit.
H = Estimated value, result over the calibration range
R = Result is suspect, LCS recovery greater than the upper control limit.
L = Result is suspect, LCS recovery lower than the control limit.
Q = QC result out of acceptance limits.
T = Trace detection, detected but below the reporting limit.

Notes:

Any remaining sample(s) for testing will be disposed of one month from the final report date unless other arrangements are made in advance.
All results are expressed on wet weight basis unless specified.
RL = Reporting Limit.
ND = Not detected, below the reporting limit.
Sub = Subcontracted analysis, original report enclosed.

14859 East Clark Avenue, City of Industry, California 91745-1396 (626) 336-2139 FAX (626) 336-2634
www.wecklabs.com

Weck Laboratories, Inc.
Environmental and Analytical Services - Since 1964

Report Date: *Monday, October 30, 2000*
Received Date: *Thursday, October 12, 2000*
Log By: tn
Log Time: 11:53

Client: Earth Tech, Inc.
100 West Broadway, Suite 5000
Long Beach, CA 90802-4443
Attn.: Barry Molnaa

Phone: (562) 951-2129
FAX: (562) 951-2086

Project: LMC POP

P.O. #: 2000S-0086-LB9
Turnaround Time: Normal

CERTIFICATE OF ANALYSIS

Lab#: A007201-001 **Sample ID:** Discharge **Matrix:** Ground Water
Sampled By: TP **Date:** 10/12/00 **Time:** 8:30

Parameter	Result	Flag	Units	Dilution Factor	RL	Method	Analyzed		Worksheet #
Nitrate as NO3	24		mg/L	1	0.20	EPA 300.0	10/12/00	kk	WS18650
Prep. SPE									
Oil & Grease	ND		mg/L	1	5	EPA 1664	10/12/00	sl	WS18613
Sulfide, dissolved	ND		mg/L	1	0.10	SM 4500S2 D	10/12/00	td	WS18544
Prep. Direct Inj.									
Perchlorate	ND		ug/L	1	4.0	EPA 314	10/20/00	dc	WS18821
Prep. EPA 3510C									
Diesel range hydrocarbons (C10-C23)	ND		mg/L	1	0.14	EPA 8015B	10/18/00	wm	WS18709
Prep. P&T									
Gasoline range hydrocarbons (C6-C10)	ND		mg/L	1	0.10	EPA 8015B	10/16/00	tl	WS18774
Prep. P&T									
Dichlorodifluoromethane	ND		ug/L	1	1.0	EPA 524.2	10/17/00	rt	WS18734
Chloromethane	ND		ug/L	1	0.50	EPA 524.2	10/17/00	rt	WS18734
Vinyl chloride	ND		ug/L	1	0.50	EPA 524.2	10/17/00	rt	WS18734
Bromomethane	ND		ug/L	1	0.50	EPA 524.2	10/17/00	rt	WS18734
Chloroethane	ND		ug/L	1	0.50	EPA 524.2	10/17/00	rt	WS18734
Trichlorofluoromethane (Freon 11)	ND		ug/L	1	5.0	EPA 524.2	10/17/00	rt	WS18734
Trichlorotrifluoroethane (Freon 113)	ND		ug/L	1	10	EPA 524.2	10/17/00	rt	WS18734
1,1-Dichloroethene	ND		ug/L	1	0.50	EPA 524.2	10/17/00	rt	WS18734
Methylene chloride (Dichloromethane)	ND		ug/L	1	0.50	EPA 524.2	10/17/00	rt	WS18734
trans-1,2-Dichloroethene	ND		ug/L	1	0.50	EPA 524.2	10/17/00	rt	WS18734
Methyl tert-Butyl Ether	ND		ug/L	1	1.0	EPA 524.2	10/17/00	rt	WS18734
1,1-Dichloroethane	ND		ug/L	1	0.50	EPA 524.2	10/17/00	rt	WS18734
2-Butanone (Methyl ethyl ketone)	ND		ug/L	1	5.0	EPA 524.2	10/17/00	rt	WS18734
2,2-Dichloropropane	ND		ug/L	1	0.50	EPA 524.2	10/17/00	rt	WS18734
cis-1,2-Dichloroethene	ND		ug/L	1	0.50	EPA 524.2	10/17/00	rt	WS18734
Bromochloromethane	ND		ug/L	1	0.50	EPA 524.2	10/17/00	rt	WS18734
Chloroform	ND		ug/L	1	0.50	EPA 524.2	10/17/00	rt	WS18734
1,1,1-Trichloroethane	ND		ug/L	1	0.50	EPA 524.2	10/17/00	rt	WS18734
Carbon tetrachloride	ND		ug/L	1	0.50	EPA 524.2	10/17/00	rt	WS18734
1,1-Dichloropropene	ND		ug/L	1	0.50	EPA 524.2	10/17/00	rt	WS18734
Benzene	ND		ug/L	1	0.50	EPA 524.2	10/17/00	rt	WS18734

14859 East Clark Avenue, City of Industry, California 91745-1396 (626) 336-2139 FAX (626) 336-2634
www.wecklabs.com

Client: Earth Tech, Inc.
Project Name: LMC POP

Report Date: *Monday, October 30, 2000*

CERTIFICATE OF ANALYSIS

Lab#: A007201-001 **Sample ID:** Discharge **Matrix:** Ground Water
Sampled By: TP **Date:** 10/12/00 **Time:** 8:30

Parameter	Result	Flag	Units	Dilution Factor	RL	Method	Analyzed	Worksheet #
1,2-Dichloroethane	ND		ug/L	1	0.50	EPA 524.2	10/17/00 rt	WS18734
Trichloroethene (TCE)	ND		ug/L	1	0.50	EPA 524.2	10/17/00 rt	WS18734
1,2-Dichloropropane	ND		ug/L	1	0.50	EPA 524.2	10/17/00 rt	WS18734
Dibromomethane	ND		ug/L	1	0.50	EPA 524.2	10/17/00 rt	WS18734
Bromodichloromethane	ND		ug/L	1	0.50	EPA 524.2	10/17/00 rt	WS18734
cis-1,3-Dichloropropene	ND		ug/L	1	0.50	EPA 524.2	10/17/00 rt	WS18734
4-Methyl-2-pentanone (MiBK)	ND		ug/L	1	5.0	EPA 524.2	10/17/00 rt	WS18734
2-Chloroethylvinyl ether	ND		ug/L	1	1.0	EPA 524.2	10/17/00 rt	WS18734
Toluene	ND		ug/L	1	0.50	EPA 524.2	10/17/00 rt	WS18734
trans-1,3-Dichloropropene	ND		ug/L	1	0.50	EPA 524.2	10/17/00 rt	WS18734
1,1,2-Trichloroethane	ND		ug/L	1	0.50	EPA 524.2	10/17/00 rt	WS18734
Tetrachloroethene (PCE)	ND		ug/L	1	0.50	EPA 524.2	10/17/00 rt	WS18734
1,3-Dichloropropane	ND		ug/L	1	0.50	EPA 524.2	10/17/00 rt	WS18734
Dibromochloromethane	ND		ug/L	1	0.50	EPA 524.2	10/17/00 rt	WS18734
1,2-Dibromoethane (EDB)	ND		ug/L	1	0.50	EPA 524.2	10/17/00 rt	WS18734
Chlorobenzene	ND		ug/L	1	0.50	EPA 524.2	10/17/00 rt	WS18734
Ethyl benzene	ND		ug/L	1	0.50	EPA 524.2	10/17/00 rt	WS18734
m/p-Xylenes	ND		ug/L	1	0.50	EPA 524.2	10/17/00 rt	WS18734
o-Xylene	ND		ug/L	1	0.50	EPA 524.2	10/17/00 rt	WS18734
Styrene	ND		ug/L	1	0.50	EPA 524.2	10/17/00 rt	WS18734
Bromoform	ND		ug/L	1	0.50	EPA 524.2	10/17/00 rt	WS18734
Isopropylbenzene	ND		ug/L	1	0.50	EPA 524.2	10/17/00 rt	WS18734
Bromobenzene	ND		ug/L	1	0.50	EPA 524.2	10/17/00 rt	WS18734
1,1,2,2-Tetrachloroethane	ND		ug/L	1	0.50	EPA 524.2	10/17/00 rt	WS18734
1,2,3-Trichloropropane	ND		ug/L	1	0.50	EPA 524.2	10/17/00 rt	WS18734
n-Propyl benzene	ND		ug/L	1	0.50	EPA 524.2	10/17/00 rt	WS18734
2-Chlorotoluene	ND		ug/L	1	0.50	EPA 524.2	10/17/00 rt	WS18734
4-Chlorotoluene	ND		ug/L	1	0.50	EPA 524.2	10/17/00 rt	WS18734
1,3,5-Trimethylbenzene	ND		ug/L	1	0.50	EPA 524.2	10/17/00 rt	WS18734
tert-Butyl benzene	ND		ug/L	1	0.50	EPA 524.2	10/17/00 rt	WS18734
1,2,4-Trimethylbenzene	ND		ug/L	1	0.50	EPA 524.2	10/17/00 rt	WS18734
bis(2-Chloroethyl) Ether	ND		ug/L	1	5.0	EPA 524.2	10/17/00 rt	WS18734
sec-Butylbenzene	ND		ug/L	1	0.50	EPA 524.2	10/17/00 rt	WS18734
1,3-Dichlorobenzene	ND		ug/L	1	0.50	EPA 524.2	10/17/00 rt	WS18734
4-isopropyltoluene	ND		ug/L	1	0.50	EPA 524.2	10/17/00 rt	WS18734
1,4-Dichlorobenzene	ND		ug/L	1	0.50	EPA 524.2	10/17/00 rt	WS18734
1,2-Dichlorobenzene	ND		ug/L	1	0.50	EPA 524.2	10/17/00 rt	WS18734
n-Butylbenzene	ND		ug/L	1	0.50	EPA 524.2	10/17/00 rt	WS18734
1,2-Dibromo-3-chloropropane (DBCP)	ND		ug/L	1	1.0	EPA 524.2	10/17/00 rt	WS18734
1,2,4-Trichlorobenzene	ND		ug/L	1	0.50	EPA 524.2	10/17/00 rt	WS18734
Hexachlorobutadiene	ND		ug/L	1	0.50	EPA 524.2	10/17/00 rt	WS18734
Naphthalene	ND		ug/L	1	0.50	EPA 524.2	10/17/00 rt	WS18734
1,2,3-Trichlorobenzene	ND		ug/L	1	0.50	EPA 524.2	10/17/00 rt	WS18734
Total 1,3-Dichloropropene	ND		ug/L	1	0.50	EPA 524.2	10/17/00 rt	WS18734
Tert-amyl Methyl Ether	ND		ug/L	1	3.0	EPA 524.2	10/17/00 rt	WS18734

14859 East Clark Avenue, City of Industry, California 91745-1396 (626) 336-2139 FAX (626) 336-2634
www.wecklabs.com

Weck Laboratories, Inc.
Environmental and Analytical Services - Since 1964

Client: Earth Tech, Inc.
Project Name: LMC POP

Report Date: *Monday, October 30, 2000*

CERTIFICATE OF ANALYSIS

Lab#: A007201-001 **Sample ID:** Discharge **Matrix:** Ground Water
Sampled By: TP **Date:** 10/12/00 **Time:** 8:30

Parameter	Result	Flag	Units	Dilution Factor	RL	Method	Analyzed		Worksheet #
Ethyl tert-Butyl Ether	ND		ug/L	1	3.0	EPA 524.2	10/17/00	rt	WS18734
1,1,1,2-Tetrachloroethane	ND		ug/L	1	0.5	EPA 524.2	10/17/00	rt	WS18734
Total Suspended Solids	ND		mg/L	1	5	EPA 160.2	10/17/00	aw	WS18678

Authorized Signature

ELAP # 1132
LACSD # 10143
AZ0526

Flags for Data Qualifiers:

B = Compound detected in the blank. Sample result equal or less than 10 times the concentration in the blank.
J = Estimated value, detected but below the reporting limit.
H = Estimated value, result over the calibration range
R = Result is suspect, LCS recovery greater than the upper control limit.
L = Result is suspect, LCS recovery lower than the control limit.
Q = QC result out of acceptance limits.
T = Trace detection, detected but below the reporting limit.

Notes:

Any remaining sample(s) for testing will be disposed of one month from the final report date unless other arrangements are made in advance.
All results are expressed on wet weight basis unless specified.
RL = Reporting Limit.
ND = Not detected, below the reporting limit.
Sub = Subcontracted analysis, original report enclosed.

14859 East Clark Avenue, City of Industry, California 91745-1396 (626) 336-2139 FAX (626) 336-2634
www.wecklabs.com

Weck Laboratories, Inc.
Environmental and Analytical Services - Since 1964

Report Date: *Friday, November 03, 2000*
Received Date: *Wednesday, October 18, 2000*
Log By: mr
Log Time: 12:16

Client: Earth Tech, Inc.
100 West Broadway, Suite 5000
Long Beach, CA 90802-4443
Attn.: Barry Molnaa

Phone: (562) 951-2129
FAX: (562) 951-2086

Project: LMC POP

P.O. #: 2000S-0086-LB9
Turnaround Time: Normal

CERTIFICATE OF ANALYSIS

Lab#: A007364-001 **Sample ID:** Discharge **Matrix:** Ground Water
Sampled By: TP **Date:** 10/18/00 **Time:** 8:30

Parameter	Result	Flag	Units	Dilution Factor	RL	Method	Analyzed	Worksheet #
Prep. *P&T*								
Dichlorodifluoromethane	ND		ug/L	1	1.0	EPA 524.2	10/19/00 rt	WS18797
Chloromethane	ND		ug/L	1	0.50	EPA 524.2	10/19/00 rt	WS18797
Vinyl chloride	ND		ug/L	1	0.50	EPA 524.2	10/19/00 rt	WS18797
Bromomethane	ND		ug/L	1	0.50	EPA 524.2	10/19/00 rt	WS18797
Chloroethane	ND		ug/L	1	0.50	EPA 524.2	10/19/00 rt	WS18797
Trichlorofluoromethane (Freon 11)	ND		ug/L	1	5.0	EPA 524.2	10/19/00 rt	WS18797
Trichlorotrifluoroethane (Freon 113)	ND		ug/L	1	10	EPA 524.2	10/19/00 rt	WS18797
1,1-Dichloroethene	ND		ug/L	1	0.50	EPA 524.2	10/19/00 rt	WS18797
Methylene chloride (Dichloromethane)	ND		ug/L	1	0.50	EPA 524.2	10/19/00 rt	WS18797
trans-1,2-Dichloroethene	ND		ug/L	1	0.50	EPA 524.2	10/19/00 rt	WS18797
Methyl tert-Butyl Ether	ND		ug/L	1	1.0	EPA 524.2	10/19/00 rt	WS18797
1,1-Dichloroethane	ND		ug/L	1	0.50	EPA 524.2	10/19/00 rt	WS18797
2-Butanone (Methyl ethyl ketone)	ND		ug/L	1	5.0	EPA 524.2	10/19/00 rt	WS18797
2,2-Dichloropropane	ND		ug/L	1	0.50	EPA 524.2	10/19/00 rt	WS18797
cis-1,2-Dichloroethene	ND		ug/L	1	0.50	EPA 524.2	10/19/00 rt	WS18797
Bromochloromethane	ND		ug/L	1	0.50	EPA 524.2	10/19/00 rt	WS18797
Chloroform	ND		ug/L	1	0.50	EPA 524.2	10/19/00 rt	WS18797
1,1,1-Trichloroethane	ND		ug/L	1	0.50	EPA 524.2	10/19/00 rt	WS18797
Carbon tetrachloride	ND		ug/L	1	0.50	EPA 524.2	10/19/00 rt	WS18797
1,1-Dichloropropene	ND		ug/L	1	0.50	EPA 524.2	10/19/00 rt	WS18797
Benzene	ND		ug/L	1	0.50	EPA 524.2	10/19/00 rt	WS18797
1,2-Dichloroethane	ND		ug/L	1	0.50	EPA 524.2	10/19/00 rt	WS18797
Trichloroethene (TCE)	ND		ug/L	1	0.50	EPA 524.2	10/19/00 rt	WS18797
1,2-Dichloropropane	ND		ug/L	1	0.50	EPA 524.2	10/19/00 rt	WS18797
Dibromomethane	ND		ug/L	1	0.50	EPA 524.2	10/19/00 rt	WS18797
Bromodichloromethane	ND		ug/L	1	0.50	EPA 524.2	10/19/00 rt	WS18797
cis-1,3-Dichloropropene	ND		ug/L	1	0.50	EPA 524.2	10/19/00 rt	WS18797
4-Methyl-2-pentanone (MiBK)	ND		ug/L	1	5.0	EPA 524.2	10/19/00 rt	WS18797
2-Chloroethylvinyl ether	ND		ug/L	1	1.0	EPA 524.2	10/19/00 rt	WS18797
Toluene	ND		ug/L	1	0.50	EPA 524.2	10/19/00 rt	WS18797
trans-1,3-Dichloropropene	ND		ug/L	1	0.50	EPA 524.2	10/19/00 rt	WS18797

14859 East Clark Avenue, City of Industry, California 91745-1396 (626) 336-2139 FAX (626) 336-2634
www.wecklabs.com

Client: Earth Tech, Inc.
Project Name: LMC POP

Report Date: *Friday, November 03, 2000*

CERTIFICATE OF ANALYSIS

Lab#: A007364-001 **Sample ID:** Discharge **Matrix:** Ground Water
Sampled By: TP **Date:** 10/18/00 **Time:** 8:30

Parameter	Result	Flag	Units	Dilution Factor	RL	Method	Analyzed		Worksheet #
1,1,2-Trichloroethane	ND		ug/L	1	0.50	EPA 524.2	10/19/00	rt	WS18797
Tetrachloroethene (PCE)	ND		ug/L	1	0.50	EPA 524.2	10/19/00	rt	WS18797
1,3-Dichloropropane	ND		ug/L	1	0.50	EPA 524.2	10/19/00	rt	WS18797
Dibromochloromethane	ND		ug/L	1	0.50	EPA 524.2	10/19/00	rt	WS18797
1,2-Dibromoethane (EDB)	ND		ug/L	1	0.50	EPA 524.2	10/19/00	rt	WS18797
Chlorobenzene	ND		ug/L	1	0.50	EPA 524.2	10/19/00	rt	WS18797
Ethyl benzene	ND		ug/L	1	0.50	EPA 524.2	10/19/00	rt	WS18797
m/p-Xylenes	ND		ug/L	1	0.50	EPA 524.2	10/19/00	rt	WS18797
o-Xylene	ND		ug/L	1	0.50	EPA 524.2	10/19/00	rt	WS18797
Styrene	ND		ug/L	1	0.50	EPA 524.2	10/19/00	rt	WS18797
Bromoform	ND		ug/L	1	0.50	EPA 524.2	10/19/00	rt	WS18797
Isopropylbenzene	ND		ug/L	1	0.50	EPA 524.2	10/19/00	rt	WS18797
Bromobenzene	ND		ug/L	1	0.50	EPA 524.2	10/19/00	rt	WS18797
1,1,2,2-Tetrachloroethane	ND		ug/L	1	0.50	EPA 524.2	10/19/00	rt	WS18797
1,2,3-Trichloropropane	ND		ug/L	1	0.50	EPA 524.2	10/19/00	rt	WS18797
n-Propyl benzene	ND		ug/L	1	0.50	EPA 524.2	10/19/00	rt	WS18797
2-Chlorotoluene	ND		ug/L	1	0.50	EPA 524.2	10/19/00	rt	WS18797
4-Chlorotoluene	ND		ug/L	1	0.50	EPA 524.2	10/19/00	rt	WS18797
1,3,5-Trimethylbenzene	ND		ug/L	1	0.50	EPA 524.2	10/19/00	rt	WS18797
tert-Butyl benzene	ND		ug/L	1	0.50	EPA 524.2	10/19/00	rt	WS18797
1,2,4-Trimethylbenzene	ND		ug/L	1	0.50	EPA 524.2	10/19/00	rt	WS18797
bis(2-Chloroethyl) Ether	ND		ug/L	1	5.0	EPA 524.2	10/19/00	rt	WS18797
sec-Butylbenzene	ND		ug/L	1	0.50	EPA 524.2	10/19/00	rt	WS18797
1,3-Dichlorobenzene	ND		ug/L	1	0.50	EPA 524.2	10/19/00	rt	WS18797
4-isopropyltoluene	ND		ug/L	1	0.50	EPA 524.2	10/19/00	rt	WS18797
1,4-Dichlorobenzene	ND		ug/L	1	0.50	EPA 524.2	10/19/00	rt	WS18797
1,2-Dichlorobenzene	ND		ug/L	1	0.50	EPA 524.2	10/19/00	rt	WS18797
n-Butylbenzene	ND		ug/L	1	0.50	EPA 524.2	10/19/00	rt	WS18797
1,2-Dibromo-3-chloropropane (DBCP)	ND		ug/L	1	1.0	EPA 524.2	10/19/00	rt	WS18797
1,2,4-Trichlorobenzene	ND		ug/L	1	0.50	EPA 524.2	10/19/00	rt	WS18797
Hexachlorobutadiene	ND		ug/L	1	0.50	EPA 524.2	10/19/00	rt	WS18797
Naphthalene	ND		ug/L	1	0.50	EPA 524.2	10/19/00	rt	WS18797
1,2,3-Trichlorobenzene	ND		ug/L	1	0.50	EPA 524.2	10/19/00	rt	WS18797
Total 1,3-Dichloropropene	ND		ug/L	1	0.50	EPA 524.2	10/19/00	rt	WS18797
Tert-amyl Methyl Ether	ND		ug/L	1	3.0	EPA 524.2	10/19/00	rt	WS18797
Ethyl tert-Butyl Ether	ND		ug/L	1	3.0	EPA 524.2	10/19/00	rt	WS18797
1,1,1,2-Tetrachloroethane	ND		ug/L	1	0.5	EPA 524.2	10/19/00	rt	WS18797
Nitrate as NO3	26		mg/L	1	0.20	EPA 300.0	10/18/00	kk	WS18850
Prep. ***SPE***									
Oil & Grease	ND		mg/L	1	5	EPA 1664	10/27/00	sl	WS19200
Prep. ***EPA 3510C***									
Diesel range hydrocarbons (C10-C23)	ND		mg/L	1	0.10	EPA 8015B	10/25/00	tl	WS19136
Prep. ***P&T***									
Gasoline range hydrocarbons (C6-C10)	ND		mg/L	1	0.10	EPA 8015B	10/25/00	tl	WS19135
Sulfide, dissolved	ND		mg/L	1	0.10	SM 4500S2 D	10/18/00	td	WS18666

14859 East Clark Avenue, City of Industry, California 91745-1396 (626) 336-2139 FAX (626) 336-2634
www.wecklabs.com

Weck Laboratories, Inc.
Environmental and Analytical Services - Since 1964

Client: Earth Tech, Inc.
Project Name: LMC POP

Report Date: *Friday, November 03, 2000*

CERTIFICATE OF ANALYSIS

Lab#: A007364-001 **Sample ID:** Discharge **Matrix:** Ground Water
Sampled By: TP **Date:** 10/18/00 **Time:** 8:30

Parameter	Result	Flag	Units	Dilution Factor	RL	Method	Analyzed		Worksheet #
Total Suspended Solids	ND		mg/L	1	5	EPA 160.2	10/20/00	aw	WS18755
Prep. *Direct Inj.*									
Perchlorate	ND		ug/L	1	4.0	EPA 314	10/25/00	dc	WS18949

Authorized Signature

ELAP # 1132
LACSD # 10143
AZ0526

Flags for Data Qualifiers:

B = Compound detected in the blank. Sample result equal or less than 10 times the concentration in the blank.
J = Estimated value, detected but below the reporting limit.
H = Estimated value, result over the calibration range
R = Result is suspect, LCS recovery greater than the upper control limit.
L = Result is suspect, LCS recovery lower than the control limit.
Q = QC result out of acceptance limits.
T = Trace detection, detected but below the reporting limit.

Notes:

Any remaining sample(s) for testing will be disposed of one month from the final report date unless other arrangements are made in advance.
All results are expressed on wet weight basis unless specified.
RL = Reporting Limit.
ND = Not detected, below the reporting limit.
Sub = Subcontracted analysis, original report enclosed.

14859 East Clark Avenue, City of Industry, California 91745-1396 (626) 336-2139 FAX (626) 336-2634
www.wecklabs.com

Weck Laboratories, Inc.
Environmental and Analytical Services - Since 1964

Report Date: *Friday, November 10, 2000*
Received Date: *Wednesday, October 25, 2000*
Log By: tn
Log Time: 11:49

Client: Earth Tech, Inc.
100 West Broadway, Suite 5000
Long Beach, CA 90802-4443
Attn.: Barry Molnaa

Phone: (562) 951-2129
FAX: (562) 951-2086

Project: LMC POP

P.O. #: 2000S-0086-LB9
Turnaround Time: Normal

CERTIFICATE OF ANALYSIS

Lab#: A007522-001 **Sample ID:** Discharge **Matrix:** Ground Water
Sampled By: TP **Date:** 10/25/00 **Time:** 9:00

Parameter	Result	Flag	Units	Dilution Factor	RL	Method	Analyzed		Worksheet #
Nitrate as NO3	31		mg/L	1	0.20	EPA 300.0	10/25/00	kk	WS19025
Prep. SPE									
Oil & Grease	ND		mg/L	1	5	EPA 1664	10/27/00	sl	WS19200
Sulfide, dissolved	ND		mg/L	1	0.10	SM 4500S2 D	10/25/00	td	WS19111
Total Suspended Solids	ND		mg/L	1	5	EPA 160.2	10/26/00	aw	WS18976
Prep. Direct Inj.									
Perchlorate	ND		ug/L	1	4.0	EPA 314	10/31/00	dc	WS19163
Prep. EPA 3510C									
Diesel range hydrocarbons (C10-C23)	ND		mg/L	1	0.10	EPA 8015B	11/1/00	tl	WS19448
Prep. P&T									
Gasoline range hydrocarbons (C6-C10)	ND		mg/L	1	0.10	EPA 8015B	10/25/00	tl	WS19135
Prep. P&T									
Dichlorodifluoromethane	ND		ug/L	1	1.0	EPA 524.2	10/31/00	rt	WS19186
Chloromethane	ND		ug/L	1	0.50	EPA 524.2	10/31/00	rt	WS19186
Vinyl chloride	ND		ug/L	1	0.50	EPA 524.2	10/31/00	rt	WS19186
Bromomethane	ND		ug/L	1	0.50	EPA 524.2	10/31/00	rt	WS19186
Chloroethane	ND		ug/L	1	0.50	EPA 524.2	10/31/00	rt	WS19186
Trichlorofluoromethane (Freon 11)	ND		ug/L	1	5.0	EPA 524.2	10/31/00	rt	WS19186
Trichlorotrifluoroethane (Freon 113)	ND		ug/L	1	10	EPA 524.2	10/31/00	rt	WS19186
1,1-Dichloroethene	ND		ug/L	1	0.50	EPA 524.2	10/31/00	rt	WS19186
Methylene chloride (Dichloromethane)	ND		ug/L	1	0.50	EPA 524.2	10/31/00	rt	WS19186
trans-1,2-Dichloroethene	ND		ug/L	1	0.50	EPA 524.2	10/31/00	rt	WS19186
Methyl tert-Butyl Ether	ND		ug/L	1	1.0	EPA 524.2	10/31/00	rt	WS19186
1,1-Dichloroethane	ND		ug/L	1	0.50	EPA 524.2	10/31/00	rt	WS19186
2-Butanone (Methyl ethyl ketone)	ND		ug/L	1	5.0	EPA 524.2	10/31/00	rt	WS19186
2,2-Dichloropropane	ND		ug/L	1	0.50	EPA 524.2	10/31/00	rt	WS19186
cis-1,2-Dichloroethene	ND		ug/L	1	0.50	EPA 524.2	10/31/00	rt	WS19186
Bromochloromethane	ND		ug/L	1	0.50	EPA 524.2	10/31/00	rt	WS19186
Chloroform	ND		ug/L	1	0.50	EPA 524.2	10/31/00	rt	WS19186
1,1,1-Trichloroethane	ND		ug/L	1	0.50	EPA 524.2	10/31/00	rt	WS19186
Carbon tetrachloride	ND		ug/L	1	0.50	EPA 524.2	10/31/00	rt	WS19186
1,1-Dichloropropene	ND		ug/L	1	0.50	EPA 524.2	10/31/00	rt	WS19186

14859 East Clark Avenue, City of Industry, California 91745-1396 (626) 336-2139 FAX (626) 336-2634
www.wecklabs.com

Client: Earth Tech, Inc.
Project Name: LMC POP

Report Date: *Friday, November 10, 2000*

CERTIFICATE OF ANALYSIS

Lab#: A007522-001 **Sample ID:** Discharge **Matrix:** Ground Water
Sampled By: TP **Date:** 10/25/00 **Time:** 9:00

Parameter	Result	Flag	Units	Dilution Factor	RL	Method	Analyzed	Worksheet #
Benzene	ND		ug/L	1	0.50	EPA 524.2	10/31/00 rt	WS19186
1,2-Dichloroethane	ND		ug/L	1	0.50	EPA 524.2	10/31/00 rt	WS19186
Trichloroethene (TCE)	ND		ug/L	1	0.50	EPA 524.2	10/31/00 rt	WS19186
1,2-Dichloropropane	ND		ug/L	1	0.50	EPA 524.2	10/31/00 rt	WS19186
Dibromomethane	ND		ug/L	1	0.50	EPA 524.2	10/31/00 rt	WS19186
Bromodichloromethane	ND		ug/L	1	0.50	EPA 524.2	10/31/00 rt	WS19186
cis-1,3-Dichloropropene	ND		ug/L	1	0.50	EPA 524.2	10/31/00 rt	WS19186
4-Methyl-2-pentanone (MiBK)	ND		ug/L	1	5.0	EPA 524.2	10/31/00 rt	WS19186
2-Chloroethylvinyl ether	ND		ug/L	1	1.0	EPA 524.2	10/31/00 rt	WS19186
Toluene	ND		ug/L	1	0.50	EPA 524.2	10/31/00 rt	WS19186
trans-1,3-Dichloropropene	ND		ug/L	1	0.50	EPA 524.2	10/31/00 rt	WS19186
1,1,2-Trichloroethane	ND		ug/L	1	0.50	EPA 524.2	10/31/00 rt	WS19186
Tetrachloroethene (PCE)	ND		ug/L	1	0.50	EPA 524.2	10/31/00 rt	WS19186
1,3-Dichloropropane	ND		ug/L	1	0.50	EPA 524.2	10/31/00 rt	WS19186
Dibromochloromethane	ND		ug/L	1	0.50	EPA 524.2	10/31/00 rt	WS19186
1,2-Dibromoethane (EDB)	ND		ug/L	1	0.50	EPA 524.2	10/31/00 rt	WS19186
Chlorobenzene	ND		ug/L	1	0.50	EPA 524.2	10/31/00 rt	WS19186
Ethyl benzene	ND		ug/L	1	0.50	EPA 524.2	10/31/00 rt	WS19186
m/p-Xylenes	ND		ug/L	1	0.50	EPA 524.2	10/31/00 rt	WS19186
o-Xylene	ND		ug/L	1	0.50	EPA 524.2	10/31/00 rt	WS19186
Styrene	ND		ug/L	1	0.50	EPA 524.2	10/31/00 rt	WS19186
Bromoform	ND		ug/L	1	0.50	EPA 524.2	10/31/00 rt	WS19186
Isopropylbenzene	ND		ug/L	1	0.50	EPA 524.2	10/31/00 rt	WS19186
Bromobenzene	ND		ug/L	1	0.50	EPA 524.2	10/31/00 rt	WS19186
1,1,2,2-Tetrachloroethane	ND		ug/L	1	0.50	EPA 524.2	10/31/00 rt	WS19186
1,2,3-Trichloropropane	ND		ug/L	1	0.50	EPA 524.2	10/31/00 rt	WS19186
n-Propyl benzene	ND		ug/L	1	0.50	EPA 524.2	10/31/00 rt	WS19186
2-Chlorotoluene	ND		ug/L	1	0.50	EPA 524.2	10/31/00 rt	WS19186
4-Chlorotoluene	ND		ug/L	1	0.50	EPA 524.2	10/31/00 rt	WS19186
1,3,5-Trimethylbenzene	ND		ug/L	1	0.50	EPA 524.2	10/31/00 rt	WS19186
tert-Butyl benzene	ND		ug/L	1	0.50	EPA 524.2	10/31/00 rt	WS19186
1,2,4-Trimethylbenzene	ND		ug/L	1	0.50	EPA 524.2	10/31/00 rt	WS19186
bis(2-Chloroethyl) Ether	ND		ug/L	1	5.0	EPA 524.2	10/31/00 rt	WS19186
sec-Butylbenzene	ND		ug/L	1	0.50	EPA 524.2	10/31/00 rt	WS19186
1,3-Dichlorobenzene	ND		ug/L	1	0.50	EPA 524.2	10/31/00 rt	WS19186
4-isopropyltoluene	ND		ug/L	1	0.50	EPA 524.2	10/31/00 rt	WS19186
1,4-Dichlorobenzene	ND		ug/L	1	0.50	EPA 524.2	10/31/00 rt	WS19186
1,2-Dichlorobenzene	ND		ug/L	1	0.50	EPA 524.2	10/31/00 rt	WS19186
n-Butylbenzene	ND		ug/L	1	0.50	EPA 524.2	10/31/00 rt	WS19186
1,2-Dibromo-3-chloropropane (DBCP)	ND		ug/L	1	1.0	EPA 524.2	10/31/00 rt	WS19186
1,2,4-Trichlorobenzene	ND		ug/L	1	0.50	EPA 524.2	10/31/00 rt	WS19186
Hexachlorobutadiene	ND		ug/L	1	0.50	EPA 524.2	10/31/00 rt	WS19186
Naphthalene	ND		ug/L	1	0.50	EPA 524.2	10/31/00 rt	WS19186
1,2,3-Trichlorobenzene	ND		ug/L	1	0.50	EPA 524.2	10/31/00 rt	WS19186
Total 1,3-Dichloropropene	ND		ug/L	1	0.50	EPA 524.2	10/31/00 rt	WS19186

14859 East Clark Avenue, City of Industry, California 91745-1396 (626) 336-2139 FAX (626) 336-2634
www.wecklabs.com

Client: Earth Tech, Inc.
Project Name: LMC POP

Report Date: *Friday, November 10, 2000*

CERTIFICATE OF ANALYSIS

Lab#: A007522-001 **Sample ID:** Discharge **Matrix:** Ground Water
Sampled By: TP **Date:** 10/25/00 **Time:** 9:00

Parameter	Result	Flag	Units	Dilution Factor	RL	Method	Analyzed	Worksheet #
Tert-amyl Methyl Ether	ND		ug/L	1	3.0	EPA 524.2	10/31/00 rt	WS19186
Ethyl tert-Butyl Ether	ND		ug/L	1	3.0	EPA 524.2	10/31/00 rt	WS19186
1,1,1,2-Tetrachloroethane	ND		ug/L	1	0.5	EPA 524.2	10/31/00 rt	WS19186

Authorized Signature

ELAP # 1132
LACSD # 10143
AZ0526

Flags for Data Qualifiers:

B = Compound detected in the blank. Sample result equal or less than 10 times the concentration in the blank.
J = Estimated value, detected but below the reporting limit.
H = Estimated value, result over the calibration range
R = Result is suspect, LCS recovery greater than the upper control limit.
L = Result is suspect, LCS recovery lower than the control limit.
Q = QC result out of acceptance limits.
T = Trace detection, detected but below the reporting limit.

Notes:

Any remaining sample(s) for testing will be disposed of one month from the final report date unless other arrangements are made in advance.
All results are expressed on wet weight basis unless specified.
RL = Reporting Limit.
ND = Not detected, below the reporting limit.
Sub = Subcontracted analysis, original report enclosed.

14859 East Clark Avenue, City of Industry, California 91745-1396 (626) 336-2139 FAX (626) 336-2634
www.wecklabs.com

DAILY MONITORING LOG

General Parameters

Date 10/2

Parameter	Location/ID#	Reading	Time	Units
pH @ Discharge	Discharge	8.1		
Conductivity	Discharge	632		
GAC Influent	PI-01	3		psi
GAC Midpoint	PI-02	0		psi
GAC Effluent	PI-03	0		psi
Bag Filter Influent	PI-04	54		psi
Bag Filter Effluent	PI-05	52		psi
Influent Manifold Pressure	PI-06			psi
Electrical Usage Meter A	Electric Meter	5224		KW-Hours
Electrical Usage Meter B	Electric Meter	1046		KW-Hours

43 40 40 40

DAILY MONITORING LOG

Column 6A

Test Sequence 2 **Date** 10/2

Parameter	Location/ID#	Reading	Time	Units
Instantaneous Influent Flow Rate to Column 6A	FI-3C-7 Rotameter	1	1430	gpm
Totalizer Value from Touch-screen	Touch Screen	29		gallons
Influent Pressure to Column 6A	PI-3C-2	~1		psi
Effluent Pressure from Column 6A	PI-3C-1	~2		psi
Differential Pressure across Column 6A	PI-3C-2 minus PI-3C-1	1		psi
Influent Sulfate Concentration 4:00 PM	Test Kit Sample @ SP-3C-2	73		mg/l
Influent Nitrate Concentration 4:00 PM	Test Kit Sample @ SP-3C-2	6.9		mg/l
Effluent Sulfate Concentration 4:00 PM	Test Kit Sample @ SP-3C-1	80 +		mg/l
Effluent Nitrate Concentration 4:00 PM	Test Kit Sample @ SP-3C-1	1.4		mg/l
Regeneration Flow Rate to Column 4	FI-3C-1	—		gpm
Rinse Water Flow Rate to Column 4	FI-3C-2	—		gpm

DAILY MONITORING LOG

Column 5

Test Sequence 2 **Date** 10/2

Parameter	Location/ID#	Reading	Time	Units
Instantaneous Influent Flow Rate to Column 5	FI-3C-7 Rotameter	6.8	1458	gpm
Totalizer Value from Touch-screen	Touch Screen	1387		gallons
Influent Pressure to Column 5	PI-3C-2	16		psi
Effluent Pressure from Column 5	PI-3C-1	7		psi
Differential Pressure across Column 5	PI-3C-2 minus PI-3C-1	9		psi
Influent Sulfate Concentration 4:00 PM	Test Kit Sample @ SP-3C-2	41		mg/l
Influent Nitrate Concentration 4:00 PM	Test Kit Sample @ SP-3C-2	8.4		mg/l
Effluent Sulfate Concentration 4:00 PM	Test Kit Sample @ SP-3C-1	0		mg/l
Effluent Nitrate Concentration 4:00 PM	Test Kit Sample @ SP-3C-1	0.0		mg/l
Regeneration Flow Rate to Column 4	FI-3C-1	—		gpm
Rinse Water Flow Rate to Column 4	FI-3C-2	—		gpm

DAILY MONITORING LOG

Column 2B

Test Sequence 2 **Cycle** 11 **Date** 10/2

Parameter	Location/ID#	Reading	Time	Units
Instantaneous Influent Flow Rate to Column 3A	~~3~~	6.8	1522	gpm
Totalizer Value from Touch-screen	Touch Screen	1511		gallons
Influent Pressure to Column ~~3A~~ 2B	PI-2B-2	12		psi
Effluent Pressure from Column ~~3A~~ 2B	PI-2B-1	7		psi
Differential Pressure across Column 3B	PI-2B-2 minus PI-2B-1	5		psi
Influent Sulfate Concentration 4:00 PM	Test Kit Sample @ SP-2B-2	47		mg/l
Influent Nitrate Concentration 4:00 PM	Test Kit Sample @ SP-2B-2	8.4		mg/l
Effluent Sulfate Concentration 4:00 PM	Test Kit Sample @ SP-2B-1	0		mg/l
Effluent Nitrate Concentration 4:00 PM	Test Kit Sample @ SP-2B-1	0.1		mg/l
Regeneration Flow Rate to Column ~~3A~~	FI-2B-1	—	—	gpm
Rinse Water Flow Rate to Column ~~3A~~	FI-2B-2	—	—	gpm

DAILY MONITORING LOG
General Parameters

Date 10/3

Parameter	Location/ID#	Reading	Time	Units
pH @ Discharge	Discharge	8.0	1800	
Conductivity	Discharge	505		
GAC Influent	PI-01	3		psi
GAC Midpoint	PI-02	0		psi
GAC Effluent	PI-03	0		psi
Bag Filter Influent	PI-04	51		psi
Bag Filter Effluent	PI-05	49		psi
Influent Manifold Pressure	PI-06			psi
Electrical Usage Meter A	Electric Meter	5233		KW-Hours
Electrical Usage Meter B	Electric Meter	1052		KW-Hours

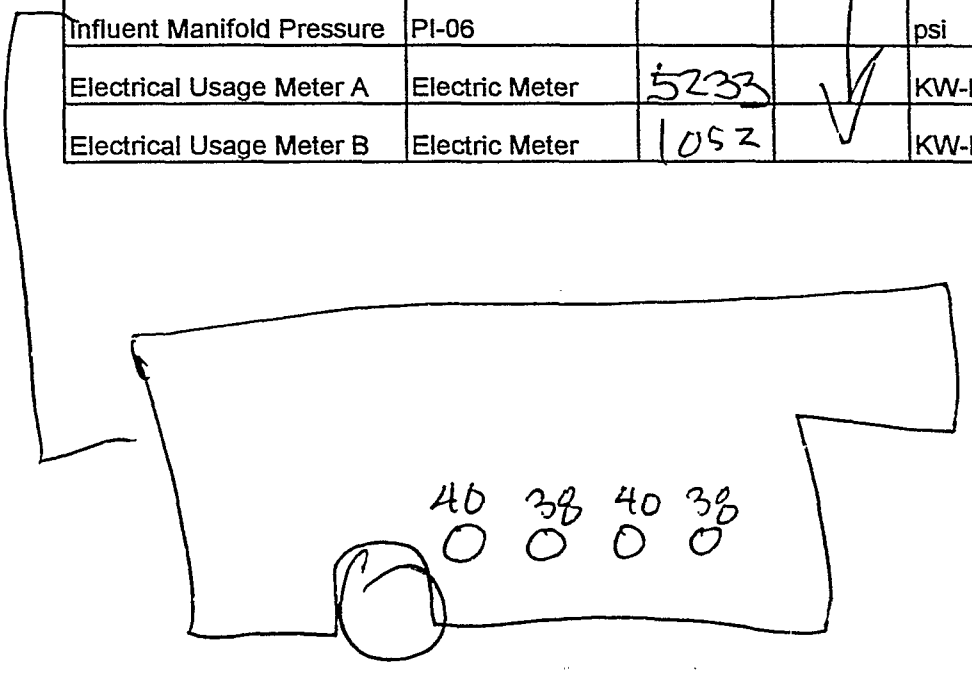

DAILY MONITORING LOG

Column 6A

Test Sequence _____ **Date** 10/3

Parameter	Location/ID#	Reading	Time	Units
Instantaneous Influent Flow Rate to Column 6A	FI-3C-7 Rotameter	1.0	11:55	gpm
Totalizer Value from Touch-screen	Touch Screen	1181	4:43	gallons
Influent Pressure to Column 6A	PI-3C-2	1	11:55	psi
Effluent Pressure from Column 6A	PI-3C-1	3	11:55	psi
Differential Pressure across Column 6A	PI-3C-2 minus PI-3C-1	-2	11:55	psi
Influent Sulfate Concentration 4:00 PM	Test Kit Sample @ SP-3C-2	807	11:59	mg/l
Influent Nitrate Concentration 4:00 PM	Test Kit Sample @ SP-3C-2	3.4	12:04	mg/l
Effluent Sulfate Concentration 4:00 PM	Test Kit Sample @ SP-3C-1	51	12:25	mg/l
Effluent Nitrate Concentration 4:00 PM	Test Kit Sample @ SP-3C-1	1.9	12:39	mg/l
~~Regeneration Flow Rate to Column 4~~	~~FI-3C-1~~			~~gpm~~
~~Rinse Water Flow Rate to Column 4~~	~~FI-3C-2~~			~~gpm~~

DAILY MONITORING LOG
Column 5

Test Sequence 2 **Date** 10/3/00

Parameter	Location/ID#	Reading	Time	Units
Instantaneous Influent Flow Rate to Column 5	FI-3C-7 Rotameter	6.0	15:56	gpm
Totalizer Value from Touch-screen	Touch Screen	1749	15:45	gallons
Influent Pressure to Column 5	PI-3C-2	19	15:45	psi
Effluent Pressure from Column 5	PI-3C-1	9	15:45	psi
Differential Pressure across Column 5	PI-3C-2 minus PI-3C-1	9	15:45	psi
Influent Sulfate Concentration 4:00 PM	Test Kit Sample @ SP-3C-2	37	15:47	mg/l
Influent Nitrate Concentration 4:00 PM	Test Kit Sample @ SP-3C-2	9.2	15:49	mg/l
Effluent Sulfate Concentration 4:00 PM	Test Kit Sample @ SP-3C-1	0	15:53	mg/l
Effluent Nitrate Concentration 4:00 PM	Test Kit Sample @ SP-3C-1	2.6	16:01	mg/l
Regeneration Flow Rate to Column 4	FI-3C-1	1gpm	25min	gpm
Rinse Water Flow Rate to Column 4	FI-3C-2	5gpm	15min	gpm

Total
25 gallon
75 gallons

DAILY MONITORING LOG

Polystyrene Column 2B

Test Sequence 2,12 **Date** 10/3/00

Parameter	Location/ID#	Reading	Time	Units
Instantaneous Influent Flow Rate to Column 2B	FI-2B-2 Rotameter	6.8	18:07	gpm
Totalizer Value from Touch-screen	Touch Screen	2439	17:55	gallons
Influent Pressure to Column 2B	PI-2B-2	13		psi
Effluent Pressure from Column 2B	PI-2B-1	9		psi
Differential Pressure across Column 2B	PI-2B-2 minus PI-2B-1	4		psi
~~Influent Sulfate Concentration 8:00 AM~~	Test Kit Sample ~~@ SP-2B-2~~			~~mg/l~~
Influent Sulfate Concentration 4:00 PM	Test Kit Sample @ SP-2B-2	39	18:09	mg/l
~~Influent Nitrate Concentration 8:00 AM~~	Test Kit Sample ~~@ SP-2B-2~~			~~mg/l~~
Influent Nitrate Concentration 6:00 PM	Test Kit Sample @ SP-2B-2	8.3	18:17	mg/l
~~Effluent Sulfate Concentration 8:00 AM~~	Test Kit Sample ~~@ SP-2B-2~~			~~mg/l~~
Effluent Sulfate Concentration 4:00 PM	Test Kit Sample @ SP-2B-2	1	18:19	mg/l
~~Effluent Nitrate Concentration 8:00 AM~~	Test Kit Sample ~~@ SP-2B-2~~			~~mg/l~~
Effluent Nitrate Concentration 6:00 PM	Test Kit Sample @ SP-2B-2	2.0	18:21	mg/l
Regeneration Flow Rate to Column 2-B	FI-2B-1	~~5~~ gpm	25min	gpm — 25 gallons
Rinse Water Flow Rate to Column 2-B	FI-2B-2	5 gpm	15min	gpm — 75 gallons

DAILY MONITORING LOG

General Parameters

Date 10/4

Parameter	Location/ID#	Reading	Time	Units
pH @ Discharge	Discharge	8.0	8:24	
Conductivity	Discharge	596	8:24	
GAC Influent	PI-01	3	18:20	psi
GAC Midpoint	PI-02	0		psi
GAC Effluent	PI-03	0		psi
Bag Filter Influent	PI-04	53		psi
Bag Filter Effluent	PI-05	49		psi
Influent Manifold Pressure	PI-06			psi
Electrical Usage Meter A	Electric Meter	5240		KW-Hours
Electrical Usage Meter B	Electric Meter	1056		KW-Hours

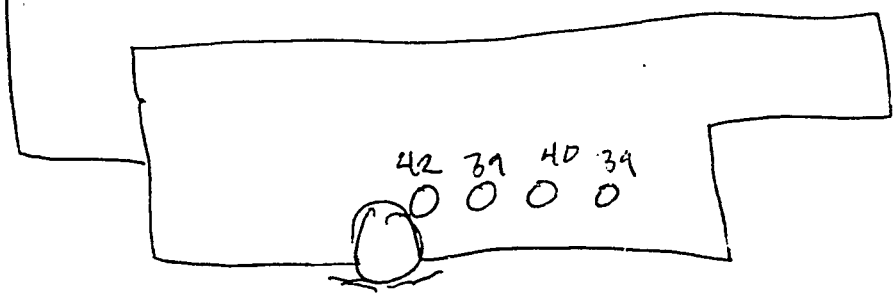

DAILY MONITORING LOG

Column 6A

Test Sequence 2, 13 **Date** 10/4/00

Parameter	Location/ID#	Reading	Time	Units
Instantaneous Influent Flow Rate to Column 6A	FI-3C-7 Rotameter	1 gpm	18:03	gpm
Totalizer Value from Touch-screen	Touch Screen	~~[illegible]~~ 3.986	18:00	gallons
Influent Pressure to Column 6A	PI-3C-2	0	18:06	psi
Effluent Pressure from Column 6A	PI-3C-1	3	18:06	psi
Differential Pressure across Column 6A	PI-3C-2 minus PI-3C-1	-3	18:06	psi
Influent Sulfate Concentration 4:00 PM	Test Kit Sample @ SP-3C-2	807	17:19	mg/l
Influent Nitrate Concentration 4:00 PM	Test Kit Sample @ SP-3C-2	8.7	17:21	mg/l
Effluent Sulfate Concentration 4:00 PM	Test Kit Sample @ SP-3C-1	807	18:20	mg/l
Effluent Nitrate Concentration 4:00 PM	Test Kit Sample @ SP-3C-1	7.4	18:24	mg/l

Parameter	Date & Time Start	Time Finish	GPM	Total Gallons
Regeneration Flow Rate to Column 6A				
Rinse Water Flow Rate to Column 6A				

DAILY MONITORING LOG

Column 5

Test Sequence 2, 13 **Date** 10/4/00

Parameter	Location/ID#	Reading	Time	Units
Instantaneous Influent Flow Rate to Column 5	FI-3C-7 Rotameter	6.8	12:41	gpm
Totalizer Value from Touch-screen	Touch Screen	682	12:37	gallons
Influent Pressure to Column 5	PI-3C-2	17	12:37	psi
Effluent Pressure from Column 5	PI-3C-1	8	12:37	psi
Differential Pressure across Column 5	PI-3C-2 minus PI-3C-1	9	12:37	psi
Influent Sulfate Concentration 4:00 PM	Test Kit Sample @ SP-3C-2	46	12:43	mg/l
Influent Nitrate Concentration 4:00 PM	Test Kit Sample @ SP-3C-2	12.5	12:47	mg/l
Effluent Sulfate Concentration 4:00 PM	Test Kit Sample @ SP-3C-1	0	12:49	mg/l
Effluent Nitrate Concentration 4:00 PM	Test Kit Sample @ SP-3C-1	1.1	12:53	mg/l

Parameter	Date & Time Start	Time Finish	GPM	Total Gallons
Regeneration Flow Rate to Column 5				
Rinse Water Flow Rate to Column 5				

DAILY MONITORING LOG

Polystyrene Column 2B

Test Sequence 2, 13 **Date** 10/4/20

Parameter	Location/ID#	Reading	Time	Units
Instantaneous Influent Flow Rate to Column 2B	FI-2B-2 Rotameter	6.8	13:09	gpm
Totalizer Value from Touch-screen	Touch Screen	738	13:09	gallons
Influent Pressure to Column 2B	PI-2B-2	12		psi
Effluent Pressure from Column 2B	PI-2B-1	8		psi
Differential Pressure across Column 2B	PI-2B-2 minus PI-2B-1	4		psi
Influent Sulfate Concentration 8:00 AM	Test Kit Sample @ SP-2B-2	N/A		mg/l
Influent Sulfate Concentration 4:00 PM	Test Kit Sample @ SP-2B-2	35	13:15	mg/l
Influent Nitrate Concentration 8:00 AM	Test Kit Sample @ SP-2B-2	N/A		mg/l
Influent Nitrate Concentration 6:00 PM	Test Kit Sample @ SP-2B-2	9.5	13:14	mg/l
Effluent Sulfate Concentration 8:00 AM	Test Kit Sample @ SP-2B-2	N/A		mg/l
Effluent Sulfate Concentration 4:00 PM	Test Kit Sample @ SP-2B-2	0	13:21	mg/l
Effluent Nitrate Concentration 8:00 AM	Test Kit Sample @ SP-2B-2	N/A		mg/l
Effluent Nitrate Concentration 6:00 PM	Test Kit Sample @ SP-2B-2	1.2	13:25	mg/l

Parameter	Date & Time Start	Time Finish	GPM	Total Gallons
Regeneration Flow Rate to Column 2-B				
Rinse Water Flow Rate to Column 2-B				

DAILY MONITORING LOG

General Parameters

Date 10/5

Parameter	Location/ID#	Reading	Time	Units
pH @ Discharge	Discharge	8.0	17:33	
Conductivity	Discharge	586		
GAC Influent	PI-01	3		psi
GAC Midpoint	PI-02	0		psi
GAC Effluent	PI-03	0		psi
Bag Filter Influent	PI-04	53		psi
Bag Filter Effluent	PI-05	50		psi
Influent Manifold Pressure	PI-06			psi
Electrical Usage Meter A	Electric Meter	5248		KW-Hours
Electrical Usage Meter B	Electric Meter	1061		KW-Hours

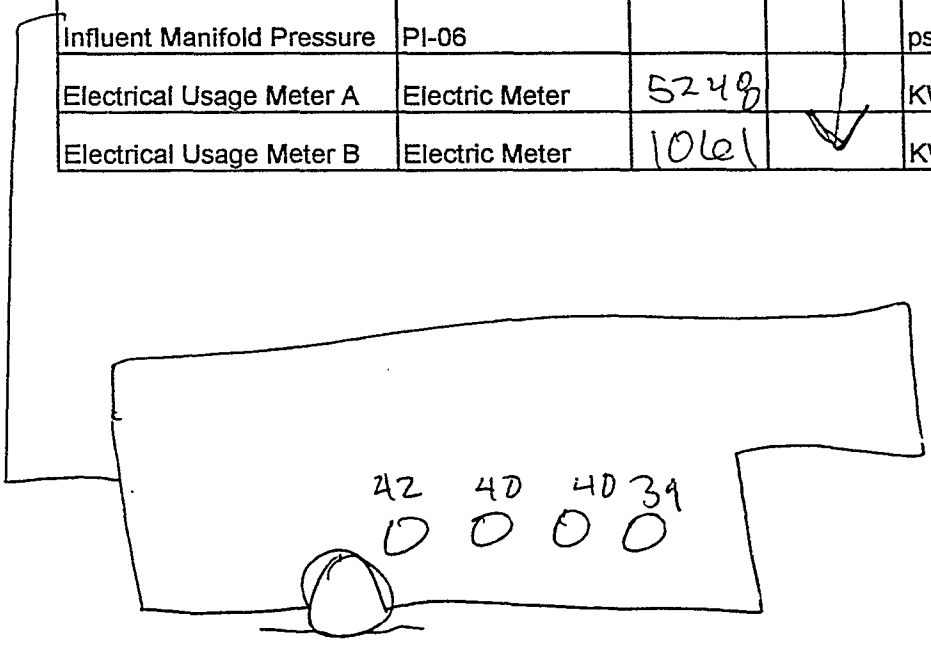

DAILY MONITORING LOG

Column 6A

Test Sequence 2, 14 **Date** 10/5/00

Parameter	Location/ID#	Reading	Time	Units
Instantaneous Influent Flow Rate to Column 6A	FI-3C-7 Rotameter	1.0	14:53	gpm
Totalizer Value from Touch-screen	Touch Screen	4297	14:42	gallons
Influent Pressure to Column 6A	PI-3C-2	0		psi
Effluent Pressure from Column 6A	PI-3C-1	3		psi
Differential Pressure across Column 6A	PI-3C-2 minus PI-3C-1	-3		psi
Influent Sulfate Concentration 4:00 PM	Test Kit Sample @ SP-3C-2	74		mg/l
Influent Nitrate Concentration 4:00 PM	Test Kit Sample @ SP-3C-2	8.6		mg/l
Effluent Sulfate Concentration 4:00 PM	Test Kit Sample @ SP-3C-1	70		mg/l
Effluent Nitrate Concentration 4:00 PM	Test Kit Sample @ SP-3C-1	4.0		mg/l

Parameter	Date & Time Start	Time Finish	GPM	Total Gallons
Regeneration Flow Rate to Column 6A	10/4 8:44	9:09	1	25
Rinse Water Flow Rate to Column 6A				

DAILY MONITORING LOG

Column 5

Test Sequence 2, 14 **Date** 10/5

Parameter	Location/ID#	Reading	Time	Units
Instantaneous Influent Flow Rate to Column 5	FI-3C-7 Rotameter	6.8	13:18	gpm
Totalizer Value from Touch-screen	Touch Screen	935	13:06	gallons
Influent Pressure to Column 5	PI-3C-2	15	13:18	psi
Effluent Pressure from Column 5	PI-3C-1	8	13:18	psi
Differential Pressure across Column 5	PI-3C-2 minus PI-3C-1	7	13:18	psi
Influent Sulfate Concentration 4:00 PM	Test Kit Sample @ SP-3C-2	33		mg/l
Influent Nitrate Concentration 4:00 PM	Test Kit Sample @ SP-3C-2	6.2		mg/l
Effluent Sulfate Concentration 4:00 PM	Test Kit Sample @ SP-3C-1	0		mg/l
Effluent Nitrate Concentration 4:00 PM	Test Kit Sample @ SP-3C-1	1.9		mg/l

Parameter	Date & Time Start	Time Finish	GPM	Total Gallons
Regeneration Flow Rate to Column 5	10/4 8:44	9:09	1	25
Rinse Water Flow Rate to Column 5	10/4 9:17	9:33	5	80

DAILY MONITORING LOG

Polystyrene Column 2B

Test Sequence 2, 14 **Date** 10/5

Parameter	Location/ID#	Reading	Time	Units
Instantaneous Influent Flow Rate to Column 2B	FI-2B-2 Rotameter	6.8	13:51	gpm
Totalizer Value from Touch-screen	Touch Screen	1139	13:40	gallons
Influent Pressure to Column 2B	PI-2B-2	13	13:40	psi
Effluent Pressure from Column 2B	PI-2B-1	9	13:40	psi
Differential Pressure across Column 2B	PI-2B-2 minus PI-2B-1	4	13:40	psi
Influent Sulfate Concentration 4:00 PM	Test Kit Sample @ SP-2B-2	64	13:51	mg/l
Influent Nitrate Concentration 6:00 PM	Test Kit Sample @ SP-2B-2	7.0		mg/l
Effluent Sulfate Concentration 4:00 PM	Test Kit Sample @ SP-2B-2	1		mg/l
Effluent Nitrate Concentration 6:00 PM	Test Kit Sample @ SP-2B-2	0.5		mg/l

Parameter	Date & Time Start	Time Finish	GPM	Total Gallons
Regeneration Flow Rate to Column 2-B	10/4 8:44	9:09	1	25
Rinse Water Flow Rate to Column 2-B	10/4 9:17	9:53	5	80

DAILY MONITORING LOG
General Parameters

Date 10/6/00

Parameter	Location/ID#	Reading	Time	Units
pH @ Discharge	Discharge	7.9	17:57	
Conductivity	Discharge	579	17:57	
GAC Influent	PI-01	3	17:49	psi
GAC Midpoint	PI-02	0		psi
GAC Effluent	PI-03	0		psi
Bag Filter Influent	PI-04	56		psi
Bag Filter Effluent	PI-05	55		psi
Influent Manifold Pressure	PI-06			psi
Electrical Usage Meter A	Electric Meter	5255		KW-Hours
Electrical Usage Meter B	Electric Meter	1065		KW-Hours

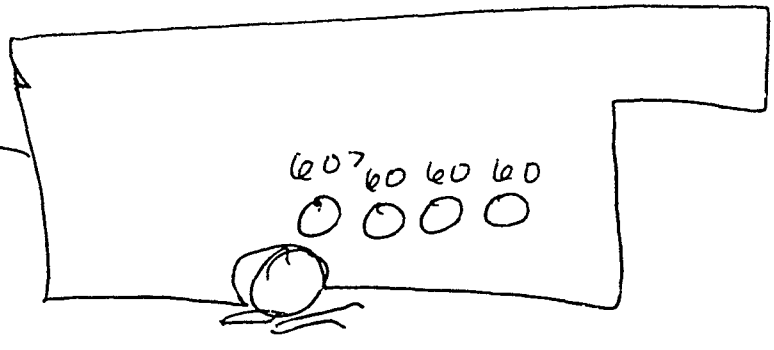

DAILY MONITORING LOG

Column 6A

Test Sequence 2, 1 **Date** 10/6/00

Parameter	Location/ID#	Reading	Time	Units
Instantaneous Influent Flow Rate to Column 6A	FI-3C-7 Rotameter	1.0	17:43	gpm
Totalizer Value from Touch-screen	Touch Screen	5976	17:43	gallons
Influent Pressure to Column 6A	PI-3C-2	0	17:43	psi
Effluent Pressure from Column 6A	PI-3C-1	3	17:43	psi
Differential Pressure across Column 6A	PI-3C-2 minus PI-3C-1	-3	17:43	psi
Influent Sulfate Concentration 4:00 PM	Test Kit Sample @ SP-3C-2	64	18:00	mg/l
Influent Nitrate Concentration 4:00 PM	Test Kit Sample @ SP-3C-2	10.7	18:02	mg/l
Effluent Sulfate Concentration 4:00 PM	Test Kit Sample @ SP-3C-1	49	18:17	mg/l
Effluent Nitrate Concentration 4:00 PM	Test Kit Sample @ SP-3C-1	10.2	18:19	mg/l

Parameter	Date & Time Start	Time Finish	GPM	Total Gallons
Regeneration Flow Rate to Column 6A				
Rinse Water Flow Rate to Column 6A				

DAILY MONITORING LOG
General Parameters

Date 10/8/00

Parameter	Location/ID#	Reading	Time	Units
pH @ Discharge	Discharge	7.8	11:53	
Conductivity	Discharge	593	11:53	
GAC Influent	PI-01	3	11:45	psi
GAC Midpoint	PI-02	0	11:45	psi
GAC Effluent	PI-03	0	11:45	psi
Bag Filter Influent	PI-04	52	11:45	psi
Bag Filter Effluent	PI-05	49	11:45	psi
Influent Manifold Pressure	PI-06		11:45	psi
Electrical Usage Meter A	Electric Meter	5267	11:45	KW-Hours
Electrical Usage Meter B	Electric Meter	1070	11:45	KW-Hours

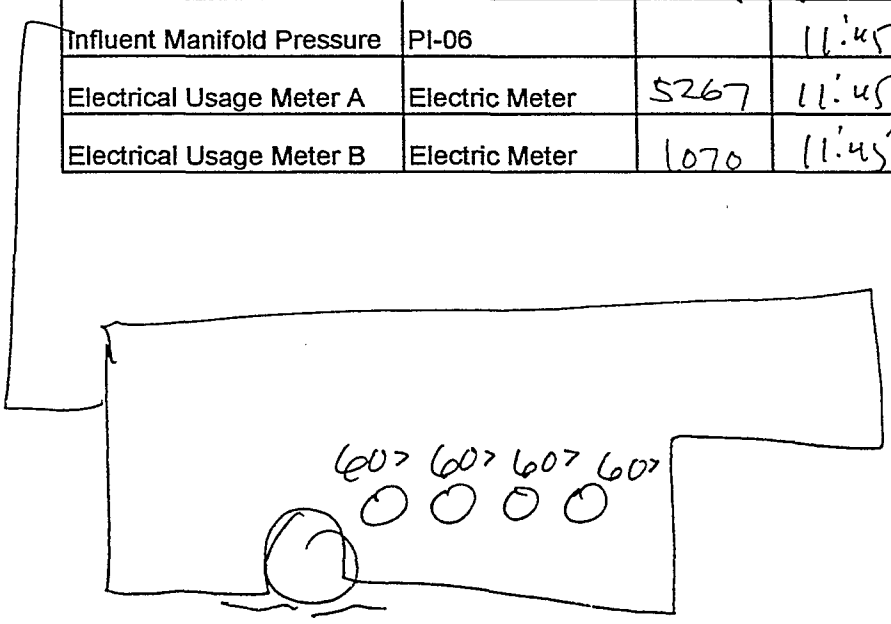

DAILY MONITORING LOG
Column 6A

Test Sequence 2, 15 cycle

Date 10/8/00

Parameter	Location/ID#	Reading	Time	Units
Instantaneous Influent Flow Rate to Column 6A	FI-3C-7 Rotameter	1.0	12:05	gpm
Totalizer Value from Touch-screen	Touch Screen	8389	11:54	gallons
Influent Pressure to Column 6A	PI-3C-2	0	12:05	psi
Effluent Pressure from Column 6A	PI-3C-1	3	12:05	psi
Differential Pressure across Column 6A	PI-3C-2 minus PI-3C-1	-3	12:05	psi
Influent Suifate Concentration 4:00 PM	Test Kit Sample @ SP-3C-2	47	12:10	mg/l
Influent Nitrate Concentration 4:00 PM	Test Kit Sample @ SP-3C-2	2.4	12:14	mg/l
Effluent Sulfate Concentration 4:00 PM	Test Kit Sample @ SP-3C-1	44	12:17	mg/l
Effluent Nitrate Concentration 4:00 PM	Test Kit Sample @ SP-3C-1	2.2	12:30	mg/l

Parameter	Date & Time Start	Time Finish	GPM	Total Gallons
Regeneration Flow Rate to Column 6A				
Rinse Water Flow Rate to Column 6A				

cycle

DAILY MONITORING LOG

Column 5

Test Sequence 2, 15 **Date** 10/8/00

Parameter	Location/ID#	Reading	Time	Units
Instantaneous Influent Flow Rate to Column 5	FI-3C-7 Rotameter	6.8	11:08	gpm
Totalizer Value from Touch-screen	Touch Screen	434	11:06	gallons
Influent Pressure to Column 5	PI-3C-2	18	11:06	psi
Effluent Pressure from Column 5	PI-3C-1	9	11:06	psi
Differential Pressure across Column 5	PI-3C-2 minus PI-3C-1	9	11:06	psi
Influent Sulfate Concentration 4:00 PM	Test Kit Sample @ SP-3C-2	25	11:10	mg/l
Influent Nitrate Concentration 4:00 PM	Test Kit Sample @ SP-3C-2	8.4	11:13	mg/l
Effluent Sulfate Concentration 4:00 PM	Test Kit Sample @ SP-3C-1	1	11:15	mg/l
Effluent Nitrate Concentration 4:00 PM	Test Kit Sample @ SP-3C-1	.6	11:20	mg/l

Parameter	Date & Time Start	Time Finish	GPM	Total Gallons
Regeneration Flow Rate to Column 5				
Rinse Water Flow Rate to Column 5				

DAILY MONITORING LOG
Polystyrene Column 2B

Test Sequence 2, 15 cycle

Date 10/8/00

Parameter	Location/ID#	Reading	Time	Units
Instantaneous Influent Flow Rate to Column 2B	FI-2B-2 Rotameter	6.8	11:55	gpm
Totalizer Value from Touch-screen	Touch Screen	553	11:49	gallons
Influent Pressure to Column 2B	PI-2B-2	11	11:49	psi
Effluent Pressure from Column 2B	PI-2B-1	8	11:49	psi
Differential Pressure across Column 2B	PI-2B-2 minus PI-2B-1	3	11:49	psi
Influent Sulfate Concentration 4:00 PM	Test Kit Sample @ SP-2B-2	33	11:57	mg/l
Influent Nitrate Concentration 6:00 PM	Test Kit Sample @ SP-2B-2	13.8	11:59	mg/l
Effluent Sulfate Concentration 4:00 PM	Test Kit Sample @ SP-2B-2	0	12:04	mg/l
Effluent Nitrate Concentration 6:00 PM	Test Kit Sample @ SP-2B-2	2.1	12:06	mg/l

Parameter	Date & Time Start	Time Finish	GPM	Total Gallons
Regeneration Flow Rate to Column 2-B				
Rinse Water Flow Rate to Column 2-B				

DAILY MONITORING LOG
General Parameters

Date 10/9/00

Parameter	Location/ID#	Reading	Time	Units
pH @ Discharge	Discharge	8.0	1700	
Conductivity	Discharge	60%		
GAC Influent	PI-01	3		psi
GAC Midpoint	PI-02	0		psi
GAC Effluent	PI-03	0		psi
Bag Filter Influent	PI-04	52		psi
Bag Filter Effluent	PI-05	49		psi
Influent Manifold Pressure	PI-06			psi
Electrical Usage Meter A	Electric Meter	5277		KW-Hours
Electrical Usage Meter B	Electric Meter	1075		KW-Hours

41 38 38 38

DAILY MONITORING LOG
Column 6A

Test Sequence 2, 1 **Date** 10/9/00

Parameter	Location/ID#	Reading	Time	Units
Instantaneous Influent Flow Rate to Column 6A	FI-3C-7 Rotameter	1.0	15:57	gpm
Totalizer Value from Touch-screen	Touch Screen	9840	15:58	gallons
Influent Pressure to Column 6A	PI-3C-2	0	15:58	psi
Effluent Pressure from Column 6A	PI-3C-1	30	15:58	psi
Differential Pressure across Column 6A	PI-3C-2 minus PI-3C-1	-3	15:58	psi
Influent Sulfate Concentration 4:00 PM	Test Kit Sample @ SP-3C-2	49	16:09	mg/l
Influent Nitrate Concentration 4:00 PM	Test Kit Sample @ SP-3C-2	9.5	16:11	mg/l
Effluent Sulfate Concentration 4:00 PM	Test Kit Sample @ SP-3C-1	67	16:24	mg/l
Effluent Nitrate Concentration 4:00 PM	Test Kit Sample @ SP-3C-1	8.3	16:26	mg/l

Parameter	Date & Time Start	Time Finish	GPM	Total Gallons
Regeneration Flow Rate to Column 6A				
Rinse Water Flow Rate to Column 6A				

DAILY MONITORING LOG

Column 5

Test Sequence 16 **Date** 10/9/00

Parameter	Location/ID#	Reading	Time	Units
Instantaneous Influent Flow Rate to Column 5	FI-3C-7 Rotameter	6.8	13:47	gpm
Totalizer Value from Touch-screen	Touch Screen	811	13:47	gallons
Influent Pressure to Column 5	PI-3C-2	19	13:47	psi
Effluent Pressure from Column 5	PI-3C-1	9	13:47	psi
Differential Pressure across Column 5	PI-3C-2 minus PI-3C-1	9	13:47	psi
Influent Sulfate Concentration 4:00 PM	Test Kit Sample @ SP-3C-2	31	14:00	mg/l
Influent Nitrate Concentration 4:00 PM	Test Kit Sample @ SP-3C-2	9.2	14:03	mg/l
Effluent Sulfate Concentration 4:00 PM	Test Kit Sample @ SP-3C-1	0	14:10	mg/l
Effluent Nitrate Concentration 4:00 PM	Test Kit Sample @ SP-3C-1	0.6	14:12	mg/l

Parameter	Date & Time Start	Time Finish	GPM	Total Gallons
Regeneration Flow Rate to Column 5				
Rinse Water Flow Rate to Column 5				

DAILY MONITORING LOG

Polystyrene Column 2B

Test Sequence 2, 16 **Date** 10/4/00

Parameter	Location/ID#	Reading	Time	Units
Instantaneous Influent Flow Rate to Column 2B	FI-2B-2 Rotameter	6.8	14:10	gpm
Totalizer Value from Touch-screen	Touch Screen	897	14:10	gallons
Influent Pressure to Column 2B	PI-2B-2	12	14:10	psi
Effluent Pressure from Column 2B	PI-2B-1	9	14:10	psi
Differential Pressure across Column 2B	PI-2B-2 minus PI-2B-1	3	14:10	psi
Influent Sulfate Concentration 4:00 PM	Test Kit Sample @ SP-2B-2	41	14:22	mg/l
Influent Nitrate Concentration 6:00 PM	Test Kit Sample @ SP-2B-2	6.3	14:23	mg/l
Effluent Sulfate Concentration 4:00 PM	Test Kit Sample @ SP-2B-2	0		mg/l
Effluent Nitrate Concentration 6:00 PM	Test Kit Sample @ SP-2B-2	4.2		mg/l

Parameter	Date & Time Start	Time Finish	GPM	Total Gallons
Regeneration Flow Rate to Column 2-B				
Rinse Water Flow Rate to Column 2-B				

DAILY MONITORING LOG
General Parameters

Date 10/10/00

Parameter	Location/ID#	Reading	Time	Units
pH @ Discharge	Discharge	7.8	1502	
Conductivity	Discharge	621		
GAC Influent	PI-01	4		psi
GAC Midpoint	PI-02	0		psi
GAC Effluent	PI-03	0		psi
Bag Filter Influent	PI-04	52		psi
Bag Filter Effluent	PI-05	49		psi
Influent Manifold Pressure	PI-06			psi
Electrical Usage Meter A	Electric Meter	5283		KW-Hours
Electrical Usage Meter B	Electric Meter	1074		KW-Hours

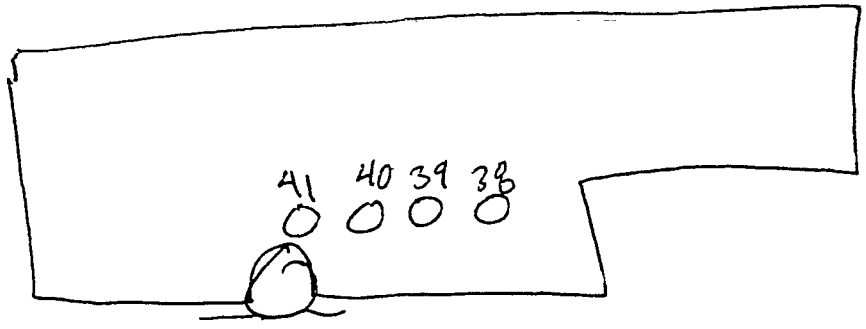

DAILY MONITORING LOG

Column 6A

Test Sequence 217 **Date** 10/10/00

Parameter	Location/ID#	Reading	Time	Units
Instantaneous Influent Flow Rate to Column 6A	FI-3C-7 Rotameter	1.0	16:15	gpm
Totalizer Value from Touch-screen	Touch Screen	11,723	16:14	gallons
Influent Pressure to Column 6A	PI-3C-2	9	16:14	psi
Effluent Pressure from Column 6A	PI-3C-1	4	16:14	psi
Differential Pressure across Column 6A	PI-3C-2 minus PI-3C-1	5	16:14	psi
Influent Sulfate Concentration 4:00 PM	Test Kit Sample @ SP-3C-2	48	16:19	mg/l
Influent Nitrate Concentration 4:00 PM	Test Kit Sample @ SP-3C-2	7.0	16:20	mg/l
Effluent Sulfate Concentration 4:00 PM	Test Kit Sample @ SP-3C-1	45	16:30	mg/l
Effluent Nitrate Concentration 4:00 PM	Test Kit Sample @ SP-3C-1	4.1	16:31	mg/l

Parameter	Date & Time Start	Time Finish	GPM	Total Gallons
Regeneration Flow Rate to Column 6A				
Rinse Water Flow Rate to Column 6A				

NOTE: Replaced influent pressure gauge w/the one that was on column 3A. Column 3A no longer running. — D.A.

DAILY MONITORING LOG

Column 5

Test Sequence 2, 17 **Date** 10/1/00

Parameter	Location/ID#	Reading	Time	Units
Instantaneous Influent Flow Rate to Column 5	FI-3C-7 Rotameter	6.8	14:35	gpm
Totalizer Value from Touch-screen	Touch Screen	1553	14:35	gallons
Influent Pressure to Column 5	PI-3C-2	19	14:35	psi
Effluent Pressure from Column 5	PI-3C-1	9	14:35	psi
Differential Pressure across Column 5	PI-3C-2 minus PI-3C-1	10	14:35	psi
Influent Sulfate Concentration 4:00 PM	Test Kit Sample @ SP-3C-2	52	14:46	mg/l
Influent Nitrate Concentration 4:00 PM	Test Kit Sample @ SP-3C-2	8.8	14:47	mg/l
Effluent Sulfate Concentration 4:00 PM	Test Kit Sample @ SP-3C-1	0	14:56	mg/l
Effluent Nitrate Concentration 4:00 PM	Test Kit Sample @ SP-3C-1	1.8	14:59	mg/l

Parameter	Date & Time Start	Time Finish	GPM	Total Gallons
Regeneration Flow Rate to Column 5				
Rinse Water Flow Rate to Column 5				

DAILY MONITORING LOG
Polystyrene Column 2B

Test Sequence 2, 17 **Date** 10/10/00

Parameter	Location/ID#	Reading	Time	Units
Instantaneous Influent Flow Rate to Column 2B	FI-2B-2 Rotameter	6.8	14:59	gpm
Totalizer Value from Touch-screen	Touch Screen	1581	15:00	gallons
Influent Pressure to Column 2B	PI-2B-2	12	15:00	psi
Effluent Pressure from Column 2B	PI-2B-1	9	15:00	psi
Differential Pressure across Column 2B	PI-2B-2 minus PI-2B-1	3	15:00	psi
Influent Sulfate Concentration 4:00 PM	Test Kit Sample @ SP-2B-2	29	15:05	mg/l
Influent Nitrate Concentration 6:00 PM	Test Kit Sample @ SP-2B-2	11.2	15:06	mg/l
Effluent Sulfate Concentration 4:00 PM	Test Kit Sample @ SP-2B-2	2	15:14	mg/l
Effluent Nitrate Concentration 6:00 PM	Test Kit Sample @ SP-2B-2	1.5	15:16	mg/l

Parameter	Date & Time Start	Time Finish	GPM	Total Gallons
Regeneration Flow Rate to Column 2-B				
Rinse Water Flow Rate to Column 2-B				

DAILY MONITORING LOG

General Parameters

Date 10/11/00

Parameter	Location/ID#	Reading	Time	Units
pH @ Discharge	Discharge	7.9	15:22	
Conductivity	Discharge	574	15:22	
GAC Influent	PI-01	3	15:14	psi
GAC Midpoint	PI-02	0	15:14	psi
GAC Effluent	PI-03	0	15:14	psi
Bag Filter Influent	PI-04	55	15:14	psi
Bag Filter Effluent	PI-05	51	15:14	psi
Influent Manifold Pressure	PI-06		15:14	psi
Electrical Usage Meter A	Electric Meter	5291	15:14	KW-Hours
Electrical Usage Meter B	Electric Meter	1083	15:14	KW-Hours

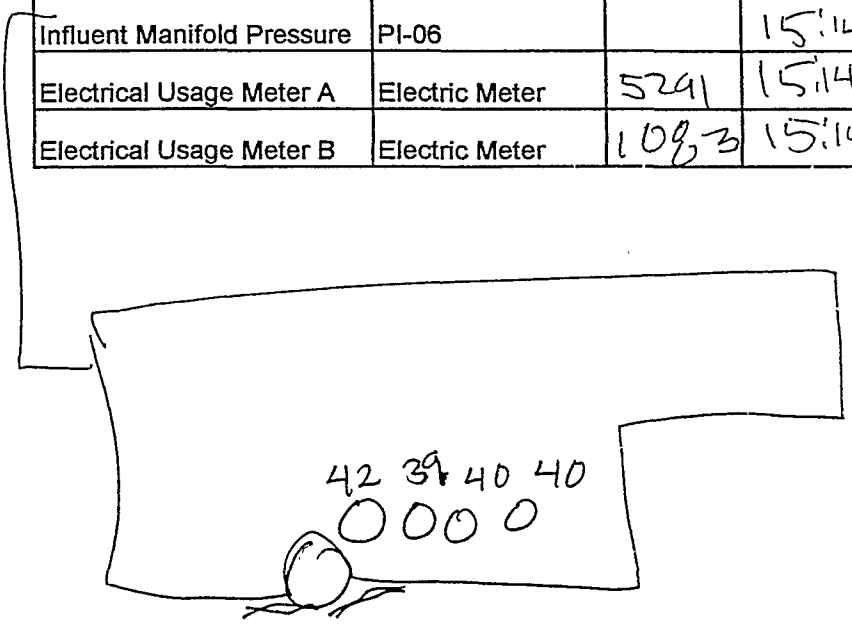

DAILY MONITORING LOG
Column 6A

Test Sequence 2, 1 **Date** 10/11/00

Parameter	Location/ID#	Reading	Time	Units
Instantaneous Influent Flow Rate to Column 6A	FI-3C-7 Rotameter	1.0	15:22	gpm
Totalizer Value from Touch-screen	Touch Screen	13141	15:20	gallons
Influent Pressure to Column 6A	PI-3C-2	8	15:20	psi
Effluent Pressure from Column 6A	PI-3C-1	3	15:20	psi
Differential Pressure across Column 6A	PI-3C-2 minus PI-3C-1	5	15:20	psi
Influent Sulfate Concentration 4:00 PM	Test Kit Sample @ SP-3C-2	28	15:30	mg/l
Influent Nitrate Concentration 4:00 PM	Test Kit Sample @ SP-3C-2	5.2	15:31	mg/l
Effluent Sulfate Concentration 4:00 PM	Test Kit Sample @ SP-3C-1	43	15:54	mg/l
Effluent Nitrate Concentration 4:00 PM	Test Kit Sample @ SP-3C-1	3.8	15:57	mg/l

Parameter	Date & Time Start	Time Finish	GPM	Total Gallons
Regeneration Flow Rate to Column 6A				
Rinse Water Flow Rate to Column 6A				

DAILY MONITORING LOG

Column 5

Test Sequence 2, 18 **Date** 10/11/00

Parameter	Location/ID#	Reading	Time	Units
Instantaneous Influent Flow Rate to Column 5	FI-3C-7 Rotameter	6.8	14:45	gpm
Totalizer Value from Touch-screen	Touch Screen	1545	14:42	gallons
Influent Pressure to Column 5	PI-3C-2	20	14:42	psi
Effluent Pressure from Column 5	PI-3C-1	9	14:42	psi
Differential Pressure across Column 5	PI-3C-2 minus PI-3C-1	11	14:42	psi
Influent Sulfate Concentration	Test Kit Sample @ SP-3C-2	53	15:00	mg/l
Influent Nitrate Concentration	Test Kit Sample @ SP-3C-2	4.8	15:01	mg/l
Effluent Sulfate Concentration	Test Kit Sample @ SP-3C-1	0	15:07	mg/l
Effluent Nitrate Concentration	Test Kit Sample @ SP-3C-1	0	15:09	mg/l

Parameter	Date & Time Start	Time Finish	GPM	Total Gallons
Regeneration Flow Rate to Column 5				
Rinse Water Flow Rate to Column 5				

DAILY MONITORING LOG

Polystyrene Column 2B

Test Sequence 2, 18 **Date** 10/4/00

Parameter	Location/ID#	Reading	Time	Units
Instantaneous Influent Flow Rate to Column 2B	FI-2B-2 Rotameter	6.8	15.01	gpm
Totalizer Value from Touch-screen	Touch Screen	1581	14:49	gallons
Influent Pressure to Column 2B	PI-2B-2	13	14:49	psi
Effluent Pressure from Column 2B	PI-2B-1	8	14:49	psi
Differential Pressure across Column 2B	PI-2B-2 minus PI-2B-1	5	14:49	psi
Influent Sulfate Concentration 4:00 PM	Test Kit Sample @ SP-2B-2	46	15:18	mg/l
Influent Nitrate Concentration 6:00 PM	Test Kit Sample @ SP-2B-2	7.3	15:20	mg/l
Effluent Sulfate Concentration 4:00 PM	Test Kit Sample @ SP-2B-2	0	15:21	mg/l
Effluent Nitrate Concentration 6:00 PM	Test Kit Sample @ SP-2B-2	0.4	15:29	mg/l

Parameter	Date & Time Start	Time Finish	GPM	Total Gallons
Regeneration Flow Rate to Column 2-B				
Rinse Water Flow Rate to Column 2-B				

DAILY MONITORING LOG

General Parameters

Date 10/12/00

Parameter	Location/ID#	Reading	Time	Units
pH @ Discharge	Discharge	7.9	15:20	
Conductivity	Discharge	495	15:20	
GAC Influent	PI-01	3	15:10	psi
GAC Midpoint	PI-02	0		psi
GAC Effluent	PI-03	0		psi
Bag Filter Influent	PI-04	54		psi
Bag Filter Effluent	PI-05	51		psi
Influent Manifold Pressure	PI-06			psi
Electrical Usage Meter A	Electric Meter	5300		KW-Hours
Electrical Usage Meter B	Electric Meter	1087		KW-Hours

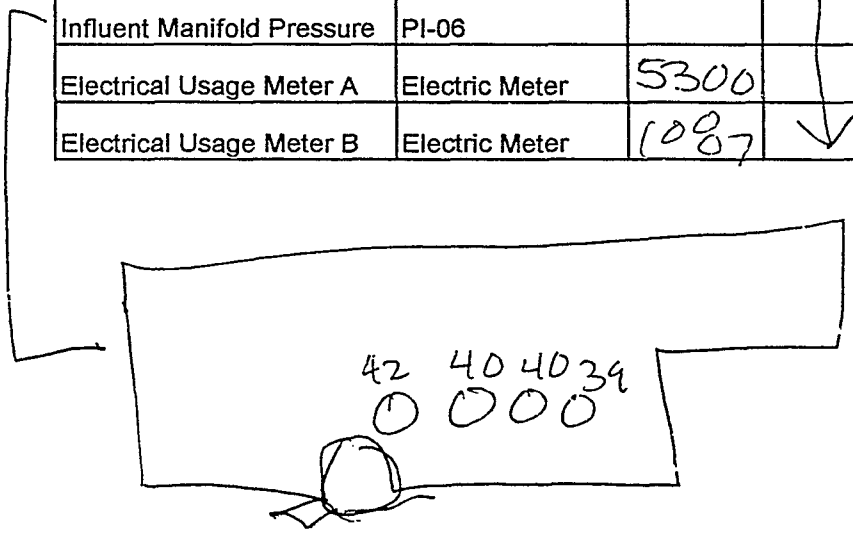

DAILY MONITORING LOG

Column 6A

Test Sequence 2, 2 **Date** 10/12

Parameter	Location/ID#	Reading	Time	Units
Instantaneous Influent Flow Rate to Column 6A	FI-3C-7 Rotameter	1.0	17:00	gpm
Totalizer Value from Touch-screen	Touch Screen	15019	16:56	gallons
Influent Pressure to Column 6A	PI-3C-2	5	16:56	psi
Effluent Pressure from Column 6A	PI-3C-1	3	16:56	psi
Differential Pressure across Column 6A	PI-3C-2 minus PI-3C-1	2	16:56	psi
Influent Sulfate Concentration 4:00 PM	Test Kit Sample @ SP-3C-2	64	16:57	mg/l
Influent Nitrate Concentration 4:00 PM	Test Kit Sample @ SP-3C-2	5.4	16:59	mg/l
Effluent Sulfate Concentration 4:00 PM	Test Kit Sample @ SP-3C-1	0	17:01	mg/l
Effluent Nitrate Concentration 4:00 PM	Test Kit Sample @ SP-3C-1	4.0	17:02	mg/l

Parameter	Date & Time Start	Time Finish	GPM	Total Gallons
Regeneration Flow Rate to Column 6A				
Rinse Water Flow Rate to Column 6A				

DAILY MONITORING LOG

Column 5

Test Sequence 2, 19 **Date** 10/2

Parameter	Location/ID#	Reading	Time	Units
Instantaneous Influent Flow Rate to Column 5	FI-3C-7 Rotameter	6.8	15:12	gpm
Totalizer Value from Touch-screen	Touch Screen	16801	15:12	gallons
Influent Pressure to Column 5	PI-3C-2	16	15:12	psi
Effluent Pressure from Column 5	PI-3C-1	8	15:12	psi
Differential Pressure across Column 5	PI-3C-2 minus PI-3C-1	8	15:12	psi
Influent Sulfate Concentration	Test Kit Sample @ SP-3C-2	45	15:14	mg/l
Influent Nitrate Concentration	Test Kit Sample @ SP-3C-2	7.5	15:16	mg/l
Effluent Sulfate Concentration	Test Kit Sample @ SP-3C-1	0	15:18	mg/l
Effluent Nitrate Concentration	Test Kit Sample @ SP-3C-1	2.2	15:20	mg/l

Parameter	Date & Time Start	Time Finish	GPM	Total Gallons
Regeneration Flow Rate to Column 5				
Rinse Water Flow Rate to Column 5				

DAILY MONITORING LOG

Polystyrene Column 2B

Test Sequence 2, 19 **Date** 10/12

Parameter	Location/ID#	Reading	Time	Units
Instantaneous Influent Flow Rate to Column 2B	FI-2B-2 Rotameter	6.80	16:16	gpm
Totalizer Value from Touch-screen	Touch Screen	2003	16:14	gallons
Influent Pressure to Column 2B	PI-2B-2	11	16:14	psi
Effluent Pressure from Column 2B	PI-2B-1	6	16:14	psi
Differential Pressure across Column 2B	PI-2B-2 minus PI-2B-1	5	16:14	psi
Influent Sulfate Concentration 4:00 PM	Test Kit Sample @ SP-2B-2	64	16:20	mg/l
Influent Nitrate Concentration 6:00 PM	Test Kit Sample @ SP-2B-2	5.4	16:23	mg/l
Effluent Sulfate Concentration 4:00 PM	Test Kit Sample @ SP-2B-2	2	1630	mg/l
Effluent Nitrate Concentration 6:00 PM	Test Kit Sample @ SP-2B-2	1.8	1630	mg/l

Parameter	Date & Time Start	Time Finish	GPM	Total Gallons
Regeneration Flow Rate to Column 2-B				
Rinse Water Flow Rate to Column 2-B				

DAILY MONITORING LOG

General Parameters

Date 10/13/00

Parameter	Location/ID#	Reading	Time	Units
pH @ Discharge	Discharge	8.0	17:06	
Conductivity	Discharge	566	17:06	
GAC Influent	PI-01	3	17:00	psi
GAC Midpoint	PI-02	0		psi
GAC Effluent	PI-03	0		psi
Bag Filter Influent	PI-04	57		psi
Bag Filter Effluent	PI-05	55		psi
Influent Manifold Pressure	PI-06			psi
Electrical Usage Meter A	Electric Meter	5308		KW-Hours
Electrical Usage Meter B	Electric Meter	1091		KW-Hours

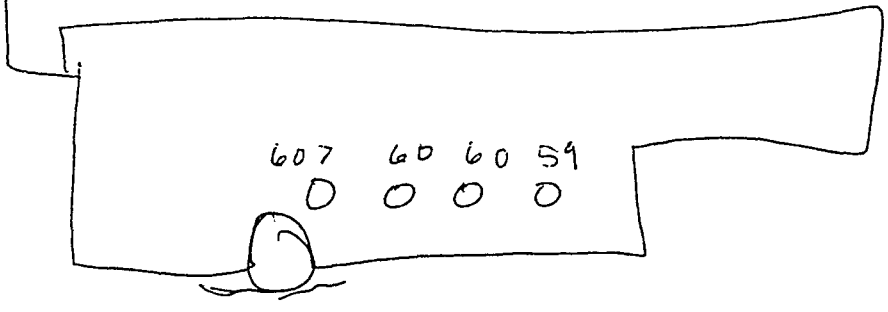

DAILY MONITORING LOG

Column 6A

Test Sequence 2, 2 **Date** 10/13/00

Parameter	Location/ID#	Reading	Time	Units
Instantaneous Influent Flow Rate to Column 6A	FI-3C-7 Rotameter	1.0	16:40	gpm
Totalizer Value from Touch-screen	Touch Screen	16306	16:46	gallons
Influent Pressure to Column 6A	PI-3C-2	3		psi
Effluent Pressure from Column 6A	PI-3C-1	2		psi
Differential Pressure across Column 6A	PI-3C-2 minus PI-3C-1	1		psi
Influent Sulfate Concentration 4:00 PM	Test Kit Sample @ SP-3C-2	69		mg/l
Influent Nitrate Concentration 4:00 PM	Test Kit Sample @ SP-3C-2	7.4		mg/l
Effluent Sulfate Concentration 4:00 PM	Test Kit Sample @ SP-3C-1	67		mg/l
Effluent Nitrate Concentration 4:00 PM	Test Kit Sample @ SP-3C-1	8.7		mg/l
system Influent Conductivity –		600	17:10	

Parameter	Date & Time Start	Time Finish	GPM	Total Gallons
Regeneration Flow Rate to Column 6A				
Rinse Water Flow Rate to Column 6A				

DAILY MONITORING LOG

General Parameters

Date 10/15/00

Parameter	Location/ID#	Reading	Time	Units
pH @ Discharge	Discharge	59+	16:50	
Conductivity	Discharge	7.8	16:50	
GAC Influent	PI-01	3	16:45	psi
GAC Midpoint	PI-02	0	16:45	psi
GAC Effluent	PI-03	0	16:45	psi
Bag Filter Influent	PI-04	53	16:45	psi
Bag Filter Effluent	PI-05	50	16:45	psi
Influent Manifold Pressure	PI-06		16:45	psi
Electrical Usage Meter A	Electric Meter	5301	16:45	KW-Hours
Electrical Usage Meter B	Electric Meter	1096	16:45	KW-Hours

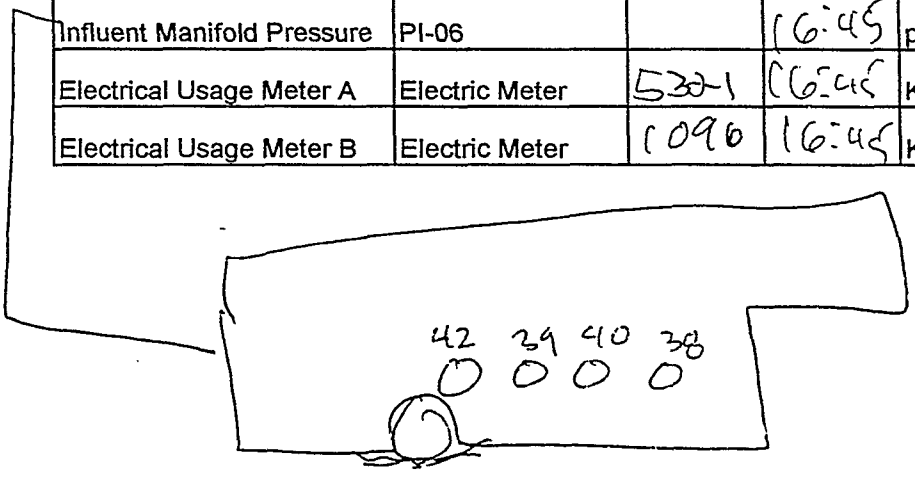

DAILY MONITORING LOG

Column 6A

Test Sequence 2, 2 **Date** 10/15

Parameter	Location/ID#	Reading	Time	Units
Instantaneous Influent Flow Rate to Column 6A	FI-3C-7 Rotameter	1.0	17:21	gpm
Totalizer Value from Touch-screen	Touch Screen	18866	17:19	gallons
Influent Pressure to Column 6A	PI-3C-2	8	17:19	psi
Effluent Pressure from Column 6A	PI-3C-1	3	17:19	psi
Differential Pressure across Column 6A	PI-3C-2 minus PI-3C-1	5	17:19	psi
Influent Sulfate Concentration 4:00 PM	Test Kit Sample @ SP-3C-2	58	17:27	mg/l
Influent Nitrate Concentration 4:00 PM	Test Kit Sample @ SP-3C-2	10.5	17:29	mg/l
Effluent Sulfate Concentration 4:00 PM	Test Kit Sample @ SP-3C-1	78	17:35	mg/l
Effluent Nitrate Concentration 4:00 PM	Test Kit Sample @ SP-3C-1	9.7	17:37	mg/l

Parameter	Date & Time Start	Time Finish	GPM	Total Gallons
Regeneration Flow Rate to Column 6A				
Rinse Water Flow Rate to Column 6A				

DAILY MONITORING LOG

Column 5

Test Sequence 2, 20 **Date** 10/15/00

Parameter	Location/ID#	Reading	Time	Units
Instantaneous Influent Flow Rate to Column 5	FI-3C-7 Rotameter	6.8	16:31	gpm
Totalizer Value from Touch-screen	Touch Screen	1728	16:30	gallons
Influent Pressure to Column 5	PI-3C-2	19	16:30	psi
Effluent Pressure from Column 5	PI-3C-1	9	16:30	psi
Differential Pressure across Column 5	PI-3C-2 minus PI-3C-1	10	16:30	psi
Influent Sulfate Concentration	Test Kit Sample @ SP-3C-2	66	16:41	mg/l
Influent Nitrate Concentration	Test Kit Sample @ SP-3C-2	9.7	16:43	mg/l
Effluent Sulfate Concentration	Test Kit Sample @ SP-3C-1	0	16:48	mg/l
Effluent Nitrate Concentration	Test Kit Sample @ SP-3C-1	2.2	16:50	mg/l

Parameter	Date & Time Start	Time Finish	GPM	Total Gallons
Regeneration Flow Rate to Column 5				
Rinse Water Flow Rate to Column 5				

DAILY MONITORING LOG
Polystyrene Column 2B

Test Sequence 2,20 **Date** 10/15/00

Parameter	Location/ID#	Reading	Time	Units
Instantaneous Influent Flow Rate to Column 2B	FI-2B-2 Rotameter	6.0	16:54	gpm
Totalizer Value from Touch-screen	Touch Screen	1786	16:52	gallons
Influent Pressure to Column 2B	PI-2B-2	~~6.8~~ 12	16:52	psi
Effluent Pressure from Column 2B	PI-2B-1	8	16:52	psi
Differential Pressure across Column 2B	PI-2B-2 minus PI-2B-1	4	16:52	psi
Influent Sulfate Concentration	Test Kit Sample @ SP-2B-2	51	16:55	mg/l
Influent Nitrate Concentration	Test Kit Sample @ SP-2B-2	9.2	16:59	mg/l
Effluent Sulfate Concentration	Test Kit Sample @ SP-2B-2	0	17:07	mg/l
Effluent Nitrate Concentration	Test Kit Sample @ SP-2B-2	1.5	17:10	mg/l

DAILY MONITORING LOG

General Parameters

Date 10/16/00

Parameter	Location/ID#	Reading	Time	Units
pH @ Discharge	Discharge	8.0	1715	
Conductivity	Discharge	550		
GAC Influent	PI-01	3		psi
GAC Midpoint	PI-02	0		psi
GAC Effluent	PI-03	0		psi
Bag Filter Influent	PI-04	53		psi
Bag Filter Effluent	PI-05	50		psi
Influent Manifold Pressure	PI-06			psi
Electrical Usage Meter A	Electric Meter	5329		KW-Hours
Electrical Usage Meter B	Electric Meter	1102		KW-Hours

44 38 39 39

DAILY MONITORING LOG

Column 6A

Test Sequence 2 **Date** 10/16

Parameter	Location/ID#	Reading	Time	Units
Instantaneous Influent Flow Rate to Column 6A	FI-3C-7 Rotameter	1	1700	gpm
Totalizer Value from Touch-screen	Touch Screen	~~5870~~ 20270		gallons
Influent Pressure to Column 6A	PI-3C-2	7		psi
Effluent Pressure from Column 6A	PI-3C-1	3		psi
Differential Pressure across Column 6A	PI-3C-2 minus PI-3C-1	4		psi
Influent Sulfate Concentration	Test Kit Sample @ SP-3C-2	62		mg/l
Influent Nitrate Concentration	Test Kit Sample @ SP-3C-2	7.4		mg/l
Effluent Sulfate Concentration	Test Kit Sample @ SP-3C-1	68		mg/l
Effluent Nitrate Concentration	Test Kit Sample @ SP-3C-1	7.3		mg/l

DAILY MONITORING LOG

Column 5

Test Sequence 2,21 **Date** 10/16/00

Parameter	Location/ID#	Reading	Time	Units
Instantaneous Influent Flow Rate to Column 5	FI-3C-7 Rotameter	6.8	15:03	gpm
Totalizer Value from Touch-screen	Touch Screen	1333	15:01	gallons
Influent Pressure to Column 5	PI-3C-2	17	15:01	psi
Effluent Pressure from Column 5	PI-3C-1	7	15:01	psi
Differential Pressure across Column 5	PI-3C-2 minus PI-3C-1	10	15:01	psi
Influent Sulfate Concentration	Test Kit Sample @ SP-3C-2	62	15:05	mg/l
Influent Nitrate Concentration	Test Kit Sample @ SP-3C-2	8.1	15:07	mg/l
Effluent Sulfate Concentration	Test Kit Sample @ SP-3C-1	0.0	15:14	mg/l
Effluent Nitrate Concentration	Test Kit Sample @ SP-3C-1	0.7	15:17	mg/l

Parameter	Date & Time Start	Time Finish	GPM	Total Gallons
Regeneration Flow Rate to Column 5				
Rinse Water Flow Rate to Column 5				

DAILY MONITORING LOG

Polystyrene Column 2B

Test Sequence 2, 21 **Date** 10/16/00

Parameter	Location/ID#	Reading	Time	Units
Instantaneous Influent Flow Rate to Column 2B	FI-2B-2 Rotameter	6.0	15:45	gpm
Totalizer Value from Touch-screen	Touch Screen	1494	15:45	gallons
Influent Pressure to Column 2B	PI-2B-2	12	15:45	psi
Effluent Pressure from Column 2B	PI-2B-1	9	15:45	psi
Differential Pressure across Column 2B	PI-2B-2 minus PI-2B-1	3	15:45	psi
Influent Sulfate Concentration	Test Kit Sample @ SP-2B-2	66	15:49	mg/l
Influent Nitrate Concentration	Test Kit Sample @ SP-2B-2	5.5	15:9	mg/l
Effluent Sulfate Concentration	Test Kit Sample @ SP-2B-2	1	15:52	mg/l
Effluent Nitrate Concentration	Test Kit Sample @ SP-2B-2	3.1	15:55	mg/l

DAILY MONITORING LOG
General Parameters

Date 10/17/00

Parameter	Location/ID#	Reading	Time	Units
pH @ Discharge	Discharge	7.8	15:46	
Conductivity	Discharge	610	15:46	
GAC Influent	PI-01	3	15:32	psi
GAC Midpoint	PI-02	0		psi
GAC Effluent	PI-03	0		psi
Bag Filter Influent	PI-04	52		psi
Bag Filter Effluent	PI-05	50		psi
Influent Manifold Pressure	PI-06			psi
Electrical Usage Meter A	Electric Meter	53336		KW-Hours
Electrical Usage Meter B	Electric Meter	1106		KW-Hours

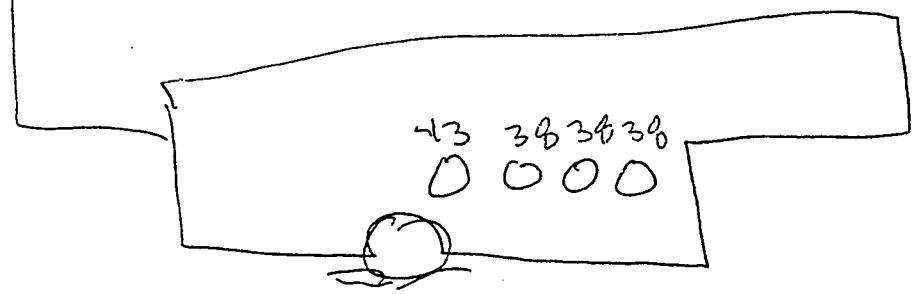

DAILY MONITORING LOG

Column 6A

Test Sequence 2, 22 **Date** 10/17/00

Parameter	Location/ID#	Reading	Time	Units
Instantaneous Influent Flow Rate to Column 6A	FI-3C-7 Rotameter	1.0	15:35	gpm
Totalizer Value from Touch-screen	Touch Screen	21,596	15:25	gallons
Influent Pressure to Column 6A	PI-3C-2	5	15:25	psi
Effluent Pressure from Column 6A	PI-3C-1	3	15:25	psi
Differential Pressure across Column 6A	PI-3C-2 minus PI-3C-1	2	15:25	psi
Influent Sulfate Concentration	Test Kit Sample @ SP-3C-2	60	15:30	mg/l
Influent Nitrate Concentration	Test Kit Sample @ SP-3C-2	8.2	15:35	mg/l
Effluent Sulfate Concentration	Test Kit Sample @ SP-3C-1	55	15:43	mg/l
Effluent Nitrate Concentration	Test Kit Sample @ SP-3C-1	4.0	15:45	mg/l

DAILY MONITORING LOG

Column 5

Test Sequence 2, 22 **Date** 10/7/00

Parameter	Location/ID#	Reading	Time	Units
Instantaneous Influent Flow Rate to Column 5	FI-3C-7 Rotameter	6.8	14:29	gpm
Totalizer Value from Touch-screen	Touch Screen	1401	14:29	gallons
Influent Pressure to Column 5	PI-3C-2	19	14:29	psi
Effluent Pressure from Column 5	PI-3C-1	8	14:29	psi
Differential Pressure across Column 5	PI-3C-2 minus PI-3C-1	11	14:29	psi
Influent Sulfate Concentration	Test Kit Sample @ SP-3C-2	41	14:30	mg/l
Influent Nitrate Concentration	Test Kit Sample @ SP-3C-2	6.6	14:31	mg/l
Effluent Sulfate Concentration	Test Kit Sample @ SP-3C-1	0	14:39	mg/l
Effluent Nitrate Concentration	Test Kit Sample @ SP-3C-1	0.8		mg/l

Parameter	Date & Time Start	Time Finish	GPM	Total Gallons
Regeneration Flow Rate to Column 5				
Rinse Water Flow Rate to Column 5				

DAILY MONITORING LOG

Polystyrene Column 2B

Test Sequence 2.22 **Date** 10/17/00

Parameter	Location/ID#	Reading	Time	Units
Instantaneous Influent Flow Rate to Column 2B	FI-2B-2 Rotameter	6.8	14:43	gpm
Totalizer Value from Touch-screen	Touch Screen	1437	14:43	gallons
Influent Pressure to Column 2B	PI-2B-2	12	14:43	psi
Effluent Pressure from Column 2B	PI-2B-1	9	14:43	psi
Differential Pressure across Column 2B	PI-2B-2 minus PI-2B-1	3	14:43	psi
Influent Sulfate Concentration	Test Kit Sample @ SP-2B-2	61	14:49	mg/l
Influent Nitrate Concentration	Test Kit Sample @ SP-2B-2	7.7	14:51	mg/l
Effluent Sulfate Concentration	Test Kit Sample @ SP-2B-2	1.0	14:58	mg/l
Effluent Nitrate Concentration	Test Kit Sample @ SP-2B-2	1.0	15:00	mg/l

DAILY MONITORING LOG

General Parameters

Date 10/18/00

Parameter	Location/ID#	Reading	Time	Units
pH @ Discharge	Discharge	7.7		
Conductivity	Discharge	537		
GAC Influent	PI-01	3		psi
GAC Midpoint	PI-02	0		psi
GAC Effluent	PI-03	0		psi
Bag Filter Influent	PI-04	52		psi
Bag Filter Effluent	PI-05	50		psi
Influent Manifold Pressure	PI-06			psi
Electrical Usage Meter A	Electric Meter	5344		KW-Hours
Electrical Usage Meter B	Electric Meter	1111		KW-Hours

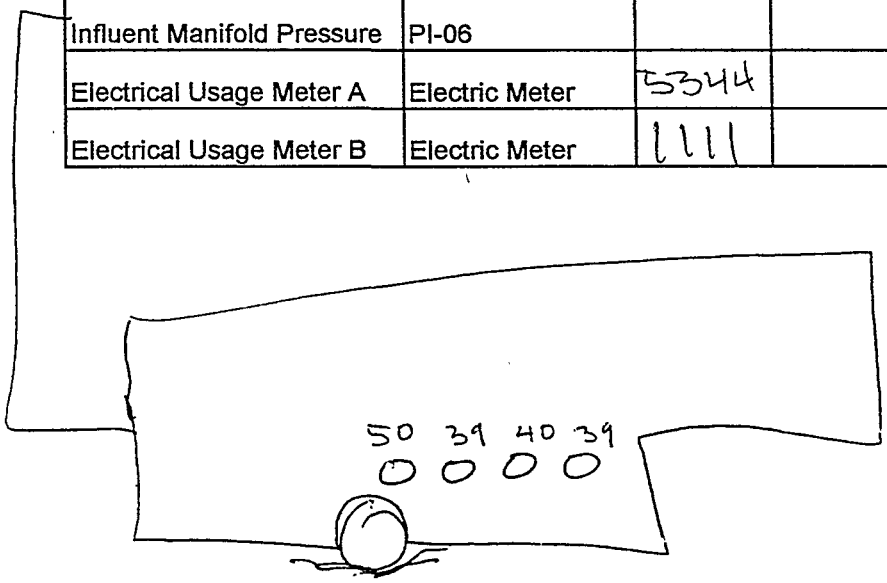

DAILY MONITORING LOG

Column 6A

Test Sequence 2, 2 **Date** 10/18/00

Parameter	Location/ID#	Reading	Time	Units
Instantaneous Influent Flow Rate to Column 6A	FI-3C-7 Rotameter	1.0	14:35	gpm
Totalizer Value from Touch-screen	Touch Screen	23000	14:23	gallons
Influent Pressure to Column 6A	PI-3C-2	7	14:23	psi
Effluent Pressure from Column 6A	PI-3C-1	3	14:23	psi
Differential Pressure across Column 6A	PI-3C-2 minus PI-3C-1	4	14:23	psi
Influent Sulfate Concentration 4:00 PM	Test Kit Sample @ SP-3C-2	57	14:25	mg/l
Influent Nitrate Concentration 4:00 PM	Test Kit Sample @ SP-3C-2	9.5	14:27	mg/l
Effluent Sulfate Concentration 4:00 PM	Test Kit Sample @ SP-3C-1	52	14:29	mg/l
Effluent Nitrate Concentration 4:00 PM	Test Kit Sample @ SP-3C-1	13.5	14:30	mg/l

Parameter	Date & Time Start	Time Finish	GPM	Total Gallons
Regeneration Flow Rate to Column 6A				
Rinse Water Flow Rate to Column 6A				

DAILY MONITORING LOG

Column 5

Test Sequence 2, 23 **Date** 10/18/00

Parameter	Location/ID#	Reading	Time	Units
Instantaneous Influent Flow Rate to Column 5	FI-3C-7 Rotameter	6.8	13:56	gpm
Totalizer Value from Touch-screen	Touch Screen	493	13:56	gallons
Influent Pressure to Column 5	PI-3C-2	18	13:56	psi
Effluent Pressure from Column 5	PI-3C-1	9	13:56	psi
Differential Pressure across Column 5	PI-3C-2 minus PI-3C-1	9	13:56	psi
Influent Sulfate Concentration	Test Kit Sample @ SP-3C-2	53	13:59	mg/l
Influent Nitrate Concentration	Test Kit Sample @ SP-3C-2	4.8	14:01	mg/l
Effluent Sulfate Concentration	Test Kit Sample @ SP-3C-1	10	14:03	mg/l
Effluent Nitrate Concentration	Test Kit Sample @ SP-3C-1	0.9		mg/l

Parameter	Date & Time Start	Time Finish	GPM	Total Gallons
Regeneration Flow Rate to Column 5				
Rinse Water Flow Rate to Column 5				

DAILY MONITORING LOG

Polystyrene Column 2B

Test Sequence 2,23

Date 10/18/00

Parameter	Location/ID#	Reading	Time	Units
Instantaneous Influent Flow Rate to Column 2B	FI-2B-2 Rotameter	6.0	14:20	gpm
Totalizer Value from Touch-screen	Touch Screen	1379	14:20	gallons
Influent Pressure to Column 2B	PI-2B-2	12	14:20	psi
Effluent Pressure from Column 2B	PI-2B-1	9	14:20	psi
Differential Pressure across Column 2B	PI-2B-2 minus PI-2B-1	3	14:20	psi
Influent Sulfate Concentration	Test Kit Sample @ SP-2B-2	55	14:25	mg/l
Influent Nitrate Concentration	Test Kit Sample @ SP-2B-2	7.0	14:28	mg/l
Effluent Sulfate Concentration	Test Kit Sample @ SP-2B-2	1	14:29	mg/l
Effluent Nitrate Concentration	Test Kit Sample @ SP-2B-2	0.8	14:31	mg/l

DAILY MONITORING LOG

General Parameters

Date 10/19/00

Parameter	Location/ID#	Reading	Time	Units
pH @ Discharge	Discharge	7.9	17:20	
Conductivity	Discharge	567		
GAC Influent	PI-01	3		psi
GAC Midpoint	PI-02	0		psi
GAC Effluent	PI-03	0		psi
Bag Filter Influent	PI-04	55		psi
Bag Filter Effluent	PI-05	51		psi
Influent Manifold Pressure	PI-06			psi
Electrical Usage Meter A	Electric Meter	5352	17:39	KW-Hours
Electrical Usage Meter B	Electric Meter	1116	17:39	KW-Hours

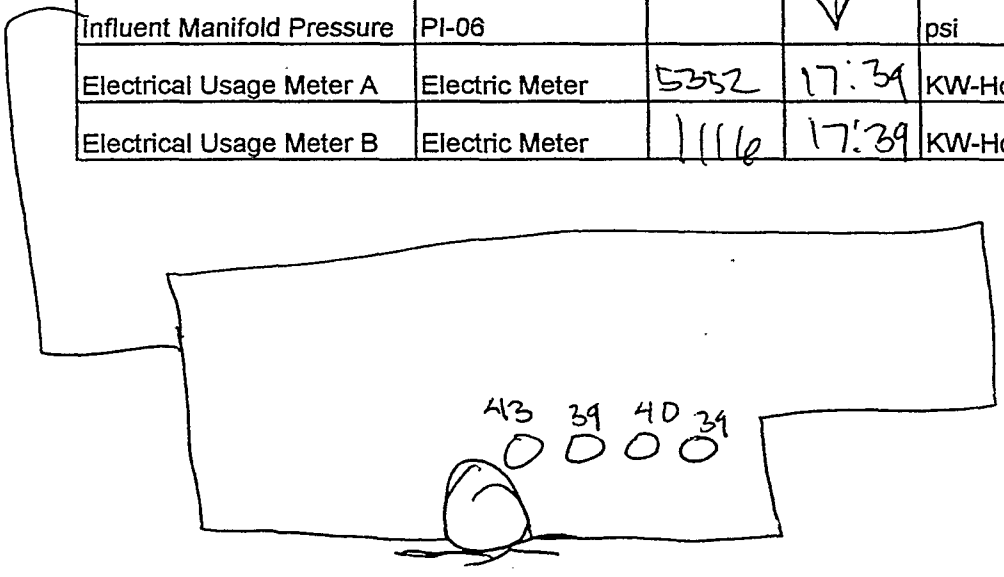

DAILY MONITORING LOG

Column 6A

Test Sequence 2, 2 **Date** 10/19/00

Parameter	Location/ID#	Reading	Time	Units
Instantaneous Influent Flow Rate to Column 6A	FI-3C-7 Rotameter	1.0	17:19	gpm
Totalizer Value from Touch-screen	Touch Screen	24536	17:19	gallons
Influent Pressure to Column 6A	PI-3C-2	7	17:19	psi
Effluent Pressure from Column 6A	PI-3C-1	3	17:19	psi
Differential Pressure across Column 6A	PI-3C-2 minus PI-3C-1	4	17:19	psi
Influent Sulfate Concentration	Test Kit Sample @ SP-3C-2	57	17:21	mg/l
Influent Nitrate Concentration	Test Kit Sample @ SP-3C-2	5.4	17:23	mg/l
Effluent Sulfate Concentration	Test Kit Sample @ SP-3C-1	42		mg/l
Effluent Nitrate Concentration	Test Kit Sample @ SP-3C-1	6.6		mg/l

DAILY MONITORING LOG

Column 5

Test Sequence 2, 24 **Date** 10/19

Parameter	Location/ID#	Reading	Time	Units
Instantaneous Influent Flow Rate to Column 5	FI-3C-7 Rotameter	6.8	13:16	gpm
Totalizer Value from Touch-screen	Touch Screen	1040	13:14	gallons
Influent Pressure to Column 5	PI-3C-2	18	13:14	psi
Effluent Pressure from Column 5	PI-3C-1	9	13:14	psi
Differential Pressure across Column 5	PI-3C-2 minus PI-3C-1	9	13:14	psi
Influent Sulfate Concentration	Test Kit Sample @ SP-3C-2	48	13:29	mg/l
Influent Nitrate Concentration	Test Kit Sample @ SP-3C-2	6.5	13:29	mg/l
Effluent Sulfate Concentration	Test Kit Sample @ SP-3C-1	0	13:33	mg/l
Effluent Nitrate Concentration	Test Kit Sample @ SP-3C-1	1.0	13:34	mg/l

DAILY MONITORING LOG

Polystyrene Column 2B

Test Sequence 2, 24

Date 10/19/00

Parameter	Location/ID#	Reading	Time	Units
Instantaneous Influent Flow Rate to Column 2B	FI-2B-2 Rotameter	6.8	13:40	gpm
Totalizer Value from Touch-screen	Touch Screen	1086	13:33	gallons
Influent Pressure to Column 2B	PI-2B-2	13	13:33	psi
Effluent Pressure from Column 2B	PI-2B-1	9	13:33	psi
Differential Pressure across Column 2B	PI-2B-2 minus PI-2B-1	4	13:33	psi
Influent Sulfate Concentration	Test Kit Sample @ SP-2B-2	59	13:48	mg/l
Influent Nitrate Concentration	Test Kit Sample @ SP-2B-2	9.2	13:49	mg/l
Effluent Sulfate Concentration	Test Kit Sample @ SP-2B-2	0.0	13:51	mg/l
Effluent Nitrate Concentration	Test Kit Sample @ SP-2B-2	0.0	13:53	mg/l

DAILY MONITORING LOG
General Parameters

Date 10/20/00

Parameter	Location/ID#	Reading	Time	Units
pH @ Discharge	Discharge	7.7	1315	
Conductivity	Discharge	556		
GAC Influent	PI-01	3		psi
GAC Midpoint	PI-02	0		psi
GAC Effluent	PI-03	0		psi
Bag Filter Influent	PI-04	57		psi
Bag Filter Effluent	PI-05	55		psi
Influent Manifold Pressure	PI-06			psi
Electrical Usage Meter A	Electric Meter	5958		KW-Hours
Electrical Usage Meter B	Electric Meter	1119		KW-Hours

60 55 60+ 55

DAILY MONITORING LOG

Column 6A

Test Sequence _____ **Date** 10/20/02

Parameter	Location/ID#	Reading	Time	Units
Instantaneous Influent Flow Rate to Column 6A	FI-3C-7 Rotameter	1	1330	gpm
Totalizer Value from Touch-screen	Touch Screen	10782		gallons
Influent Pressure to Column 6A	PI-3C-2	10		psi
Effluent Pressure from Column 6A	PI-3C-1	3		psi
Differential Pressure across Column 6A	PI-3C-2 minus PI-3C-1	7		psi
Influent Sulfate Concentration	Test Kit Sample @ SP-3C-2	59		mg/l
Influent Nitrate Concentration	Test Kit Sample @ SP-3C-2	5.6		mg/l
Effluent Sulfate Concentration	Test Kit Sample @ SP-3C-1	40		mg/l
Effluent Nitrate Concentration	Test Kit Sample @ SP-3C-1	6.5		mg/l

DAILY MONITORING LOG

General Parameters

Date 1/6/22

Parameter	Location/ID#	Reading	Time	Units
pH @ Discharge	Discharge	7.9	16:01	
Conductivity	Discharge	593	16:01	
GAC Influent	PI-01	3	15:50	psi
GAC Midpoint	PI-02	0		psi
GAC Effluent	PI-03	0		psi
Bag Filter Influent	PI-04	55		psi
Bag Filter Effluent	PI-05	51		psi
Influent Manifold Pressure	PI-06			psi
Electrical Usage Meter A	Electric Meter	5373		KW-Hours
Electrical Usage Meter B	Electric Meter	1124	✓	KW-Hours

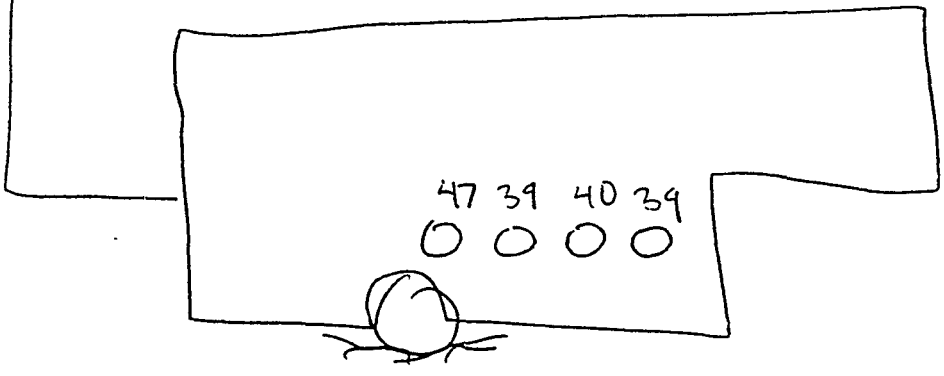

DAILY MONITORING LOG

Column 5

Test Sequence 2, 25 **Date** 10/22/00

Parameter	Location/ID#	Reading	Time	Units
Instantaneous Influent Flow Rate to Column 5	FI-3C-7 Rotameter	6.8	15:12	gpm
Totalizer Value from Touch-screen	Touch Screen	990	14:50	gallons
Influent Pressure to Column 5	PI-3C-2	12	14:50	psi
Effluent Pressure from Column 5	PI-3C-1	8	14:50	psi
Differential Pressure across Column 5	PI-3C-2 minus PI-3C-1	4	14:50	psi
Influent Sulfate Concentration	Test Kit Sample @ SP-3C-2	55	14:55	mg/l
Influent Nitrate Concentration	Test Kit Sample @ SP-3C-2	7.7	14:57	mg/l
Effluent Sulfate Concentration	Test Kit Sample @ SP-3C-1	~~14.7~~ (1)	15:01	mg/l
Effluent Nitrate Concentration	Test Kit Sample @ SP-3C-1	0.7	15:04	mg/l

DAILY MONITORING LOG

Polystyrene Column 2B

Test Sequence 2,25 **Date** 10/22

Parameter	Location/ID#	Reading	Time	Units
Instantaneous Influent Flow Rate to Column 2B	FI-2B-2 Rotameter	6.8	15:28	gpm
Totalizer Value from Touch-screen	Touch Screen	1164	15:28	gallons
Influent Pressure to Column 2B	PI-2B-2	12	15:28	psi
Effluent Pressure from Column 2B	PI-2B-1	8	15:28	psi
Differential Pressure across Column 2B	PI-2B-2 minus PI-2B-1	4	15:28	psi
Influent Sulfate Concentration	Test Kit Sample @ SP-2B-2	30	15:30	mg/l
Influent Nitrate Concentration	Test Kit Sample @ SP-2B-2	14	15:35	mg/l
Effluent Sulfate Concentration	Test Kit Sample @ SP-2B-2	2	15:40	mg/l
Effluent Nitrate Concentration	Test Kit Sample @ SP-2B-2	1.3	15:40	mg/l

DAILY MONITORING LOG
General Parameters

Date 10/27/00

Parameter	Location/ID#	Reading	Time	Units
pH @ Discharge	Discharge	7.9	15:50	
Conductivity	Discharge	468	15:50	
GAC Influent	PI-01	3	15:47	psi
GAC Midpoint	PI-02	0		psi
GAC Effluent	PI-03	0		psi
Bag Filter Influent	PI-04	55		psi
Bag Filter Effluent	PI-05	51		psi
Influent Manifold Pressure	PI-06			psi
Electrical Usage Meter A	Electric Meter	53800		KW-Hours
Electrical Usage Meter B	Electric Meter	11200		KW-Hours

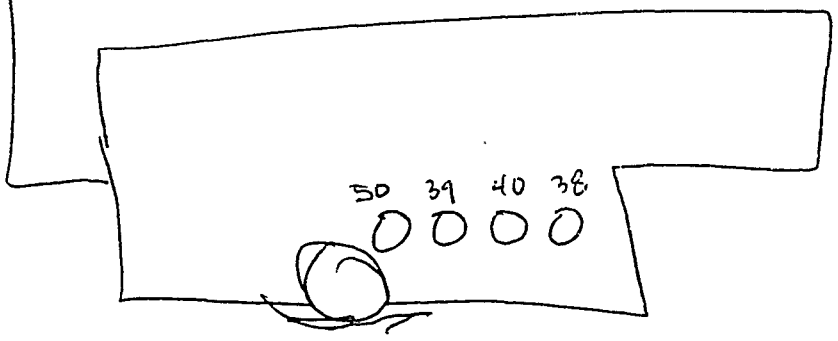

DAILY MONITORING LOG

Column 5

Test Sequence 2, 26 **Date** 10/23/00

Parameter	Location/ID#	Reading	Time	Units
Instantaneous Influent Flow Rate to Column 5	FI-3C-7 Rotameter	6.8	15:05	gpm
Totalizer Value from Touch-screen	Touch Screen	903	15:05	gallons
Influent Pressure to Column 5	PI-3C-2	12	15:05	psi
Effluent Pressure from Column 5	PI-3C-1	8	15:05	psi
Differential Pressure across Column 5	PI-3C-2 minus PI-3C-1	4	15:05	psi
Influent Sulfate Concentration	Test Kit Sample @ SP-3C-2	35	15:10	mg/l
Influent Nitrate Concentration	Test Kit Sample @ SP-3C-2	4.8	15:12	mg/l
Effluent Sulfate Concentration	Test Kit Sample @ SP-3C-1	0	15:17	mg/l
Effluent Nitrate Concentration	Test Kit Sample @ SP-3C-1	0	15:19	mg/l

DAILY MONITORING LOG

Polystyrene Column 2B

Test Sequence 2,26 **Date** 10/23/00

Parameter	Location/ID#	Reading	Time	Units
Instantaneous Influent Flow Rate to Column 2B	FI-2B-2 Rotameter	6.8	15:30	gpm
Totalizer Value from Touch-screen	Touch Screen	1022	15:24	gallons
Influent Pressure to Column 2B	PI-2B-2	10	15:24	psi
Effluent Pressure from Column 2B	PI-2B-1	8	15:24	psi
Differential Pressure across Column 2B	PI-2B-2 minus PI-2B-1	2	15:24	psi
Influent Sulfate Concentration	Test Kit Sample @ SP-2B-2	36	15:31	mg/l
Influent Nitrate Concentration	Test Kit Sample @ SP-2B-2	5.9	15:33	mg/l
Effluent Sulfate Concentration	Test Kit Sample @ SP-2B-2	0	15:40	mg/l
Effluent Nitrate Concentration	Test Kit Sample @ SP-2B-2	0.0	15:42	mg/l

DAILY MONITORING LOG

General Parameters

Date 10/24/00

Parameter	Location/ID#	Reading	Time	Units
pH @ Discharge	Discharge	5.68	14:45	
Conductivity	Discharge	7.7		
GAC Influent	PI-01	3		psi
GAC Midpoint	PI-02	0		psi
GAC Effluent	PI-03	0		psi
Bag Filter Influent	PI-04	55		psi
Bag Filter Effluent	PI-05	51		psi
Influent Manifold Pressure	PI-06			psi
Electrical Usage Meter A	Electric Meter	5387		KW-Hours
Electrical Usage Meter B	Electric Meter	1131		KW-Hours

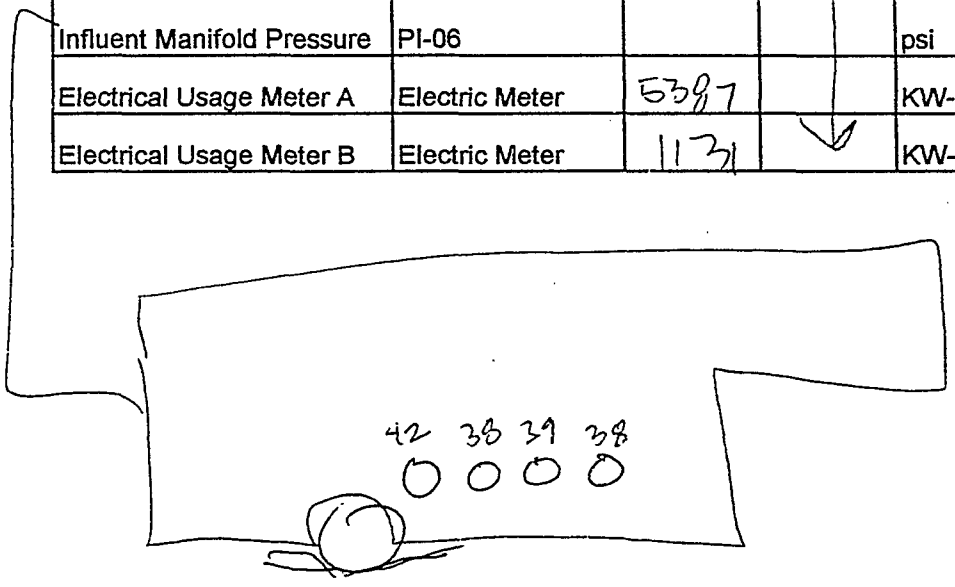

DAILY MONITORING LOG

Column 6A

Test Sequence 2,27 **Date** 10/24/00

Parameter	Location/ID#	Reading	Time	Units
Instantaneous Influent Flow Rate to Column 6A	FI-3C-7 Rotameter	6.0	14:05	gpm
Totalizer Value from Touch-screen	Touch Screen	30799	14:06	gallons
Influent Pressure to Column 6A	PI-3C-2	5	14:06	psi
Effluent Pressure from Column 6A	PI-3C-1	3	14:06	psi
Differential Pressure across Column 6A	PI-3C-2 minus PI-3C-1	2	14:06	psi
Influent Sulfate Concentration	Test Kit Sample @ SP-3C-2	37	14:06	mg/l
Influent Nitrate Concentration	Test Kit Sample @ SP-3C-2	10.2	14:08	mg/l
Effluent Sulfate Concentration	Test Kit Sample @ SP-3C-1	34	14:09	mg/l
Effluent Nitrate Concentration	Test Kit Sample @ SP-3C-1	6.6	14:12	mg/l

DAILY MONITORING LOG
Column 5

Test Sequence 10/24/00 **Date** 2, 27

Parameter	Location/ID#	Reading	Time	Units
Instantaneous Influent Flow Rate to Column 5	FI-3C-7 Rotameter	4.8	13:02	gpm
Totalizer Value from Touch-screen	Touch Screen	936	13:02	gallons
Influent Pressure to Column 5	PI-3C-2	19	13:02	psi
Effluent Pressure from Column 5	PI-3C-1	9	13:02	psi
Differential Pressure across Column 5	PI-3C-2 minus PI-3C-1	10	13:02	psi
Influent Sulfate Concentration	Test Kit Sample @ SP-3C-2	5	13:18	mg/l
Influent Nitrate Concentration	Test Kit Sample @ SP-3C-2	4.0	13:20	mg/l
Effluent Sulfate Concentration	Test Kit Sample @ SP-3C-1	0	13:22	mg/l
Effluent Nitrate Concentration	Test Kit Sample @ SP-3C-1	1.8	13:24	mg/l

DAILY MONITORING LOG

Polystyrene Column 2B

Test Sequence 2, 27

Date 10/24/00

Parameter	Location/ID#	Reading	Time	Units
Instantaneous Influent Flow Rate to Column 2B	FI-2B-2 Rotameter	6.8	13:47	gpm
Totalizer Value from Touch-screen	Touch Screen	10414	13:47	gallons
Influent Pressure to Column 2B	PI-2B-2	16	13:47	psi
Effluent Pressure from Column 2B	PI-2B-1	9	13:47	psi
Differential Pressure across Column 2B	PI-2B-2 minus PI-2B-1	7	13:47	psi
Influent Sulfate Concentration	Test Kit Sample @ SP-2B-2	53	13:47	mg/l
Influent Nitrate Concentration	Test Kit Sample @ SP-2B-2	5.9	13:47	mg/l
Effluent Sulfate Concentration	Test Kit Sample @ SP-2B-2	1	13:50	mg/l
Effluent Nitrate Concentration	Test Kit Sample @ SP-2B-2	1.3	13:52	mg/l

DAILY MONITORING LOG

General Parameters

Date 10/25/00

Parameter	Location/ID#	Reading	Time	Units
pH @ Discharge	Discharge	7.7	15:06	
Conductivity	Discharge	559	15:06	
GAC Influent	PI-01	3	15:01	psi
GAC Midpoint	PI-02	0		psi
GAC Effluent	PI-03	0		psi
Bag Filter Influent	PI-04	55		psi
Bag Filter Effluent	PI-05	50		psi
Influent Manifold Pressure	PI-06			psi
Electrical Usage Meter A	Electric Meter	5395		KW-Hours
Electrical Usage Meter B	Electric Meter	1136		KW-Hours

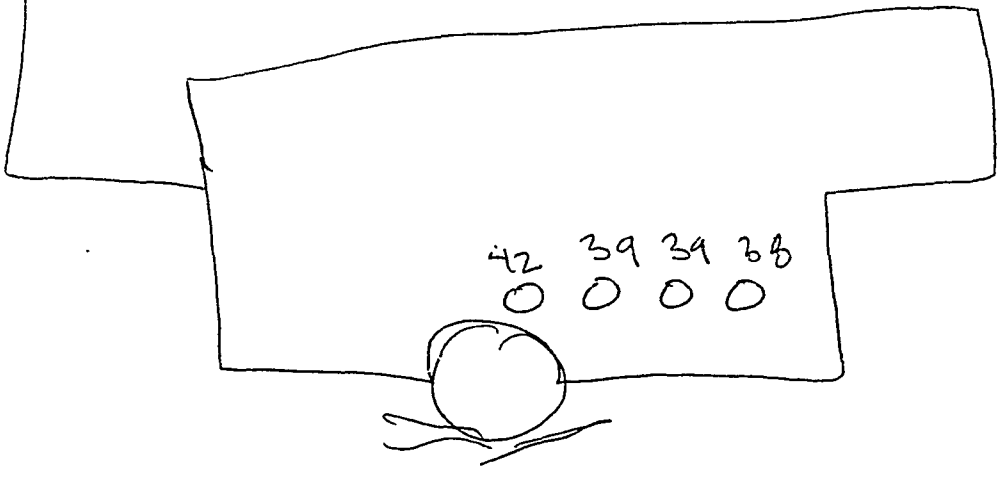

DAILY MONITORING LOG

Column 6A

Test Sequence 2,28 **Date** 10/25/00

Parameter	Location/ID#	Reading	Time	Units
Instantaneous Influent Flow Rate to Column 6A	FI-3C-7 Rotameter	1.0	14:22	gpm
Totalizer Value from Touch-screen	Touch Screen	31848	14:22	gallons
Influent Pressure to Column 6A	PI-3C-2	5	14:22	psi
Effluent Pressure from Column 6A	PI-3C-1	3	14:22	psi
Differential Pressure across Column 6A	PI-3C-2 minus PI-3C-1	2	14:22	psi
Influent Sulfate Concentration	Test Kit Sample @ SP-3C-2	40	14:21	mg/l
Influent Nitrate Concentration	Test Kit Sample @ SP-3C-2	9.8	14:23	mg/l
Effluent Sulfate Concentration	Test Kit Sample @ SP-3C-1	38	14:25	mg/l
Effluent Nitrate Concentration	Test Kit Sample @ SP-3C-1	4.6	14:25	mg/l

DAILY MONITORING LOG

Column 5

Test Sequence 2, 2a

Date 10/25/00

Parameter	Location/ID#	Reading	Time	Units
Instantaneous Influent Flow Rate to Column 5	FI-3C-7 Rotameter	6.0	13:55	gpm
Totalizer Value from Touch-screen	Touch Screen	921	13:55	gallons
Influent Pressure to Column 5	PI-3C-2	10	13:55	psi
Effluent Pressure from Column 5	PI-3C-1	8	13:55	psi
Differential Pressure across Column 5	PI-3C-2 minus PI-3C-1	10	13:55	psi
Influent Sulfate Concentration	Test Kit Sample @ SP-3C-2	45	13:56	mg/l
Influent Nitrate Concentration	Test Kit Sample @ SP-3C-2	6.6	13:56	mg/l
Effluent Sulfate Concentration	Test Kit Sample @ SP-3C-1	0.0	13:59	mg/l
Effluent Nitrate Concentration	Test Kit Sample @ SP-3C-1	0.6	14:02	mg/l

DAILY MONITORING LOG

Polystyrene Column 2B

Test Sequence 2,2b

Date 10/25/00

Parameter	Location/ID#	Reading	Time	Units
Instantaneous Influent Flow Rate to Column 2B	FI-2B-2 Rotameter	6.8	14:09	gpm
Totalizer Value from Touch-screen	Touch Screen	958	14:09	gallons
Influent Pressure to Column 2B	PI-2B-2	12	14:09	psi
Effluent Pressure from Column 2B	PI-2B-1	9	14:09	psi
Differential Pressure across Column 2B	PI-2B-2 minus PI-2B-1	3	14:09	psi
Influent Sulfate Concentration	Test Kit Sample @ SP-2B-2	56	14:23	mg/l
Influent Nitrate Concentration	Test Kit Sample @ SP-2B-2	6.6	14:25	mg/l
Effluent Sulfate Concentration	Test Kit Sample @ SP-2B-2	1	14:30	mg/l
Effluent Nitrate Concentration	Test Kit Sample @ SP-2B-2	0.7	14:32	mg/l

DAILY MONITORING LOG
General Parameters

Date 10/26/00

Parameter	Location/ID#	Reading	Time	Units
pH @ Discharge	Discharge	7.7	15:50	
Conductivity	Discharge	487		
GAC Influent	PI-01	3		psi
GAC Midpoint	PI-02	0		psi
GAC Effluent	PI-03	0		psi
Bag Filter Influent	PI-04	52		psi
Bag Filter Effluent	PI-05	50		psi
Influent Manifold Pressure	PI-06			psi
Electrical Usage Meter A	Electric Meter	5403		KW-Hours
Electrical Usage Meter B	Electric Meter	1140		KW-Hours

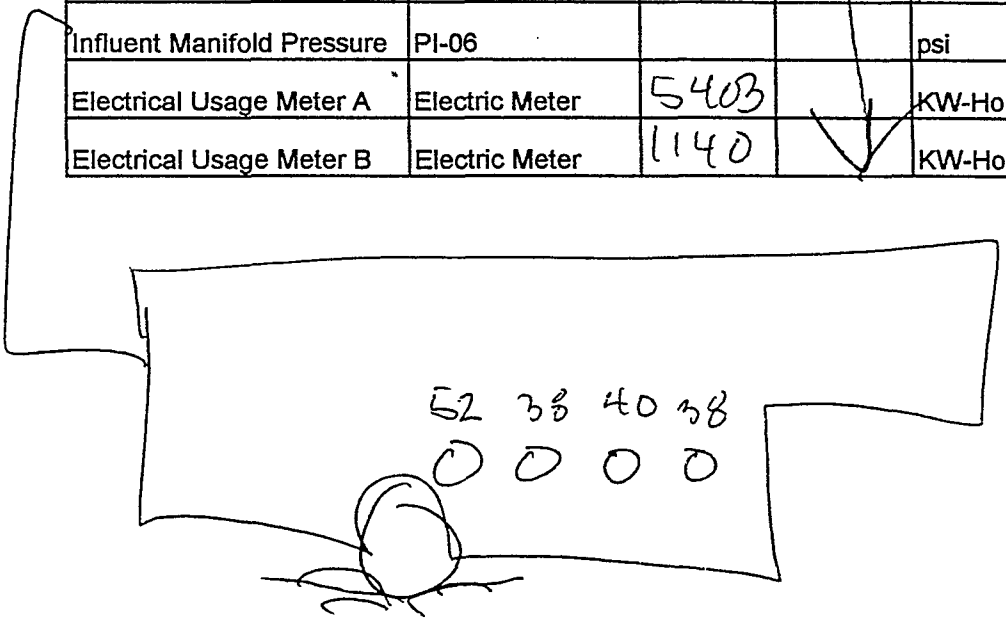

DAILY MONITORING LOG

Column 6A

Test Sequence 2, 3 **Date** 10/26/00

Parameter	Location/ID#	Reading	Time	Units
Instantaneous Influent Flow Rate to Column 6A	FI-3C-7 Rotameter	1.0	13:44	gpm
Totalizer Value from Touch-screen	Touch Screen	33147	13:32	gallons
Influent Pressure to Column 6A	PI-3C-2	4	13:32	psi
Effluent Pressure from Column 6A	PI-3C-1	2	13:32	psi
Differential Pressure across Column 6A	PI-3C-2 minus PI-3C-1	2	13:32	psi
Influent Sulfate Concentration	Test Kit Sample @ SP-3C-2	36	13:48	mg/l
Influent Nitrate Concentration	Test Kit Sample @ SP-3C-2	8.7	13:51	mg/l
Effluent Sulfate Concentration	Test Kit Sample @ SP-3C-1	33	13:55	mg/l
Effluent Nitrate Concentration	Test Kit Sample @ SP-3C-1	7.7	13:57	mg/l

DAILY MONITORING LOG

Column 5

Test Sequence 2, 79 **Date** 10/26/00

Parameter	Location/ID#	Reading	Time	Units
Instantaneous Influent Flow Rate to Column 5	FI-3C-7 Rotameter	6.8	12:48	gpm
Totalizer Value from Touch-screen	Touch Screen	455	12:48	gallons
Influent Pressure to Column 5	PI-3C-2	19	12:48	psi
Effluent Pressure from Column 5	PI-3C-1	8	12:48	psi
Differential Pressure across Column 5	PI-3C-2 minus PI-3C-1	11	12:48	psi
Influent Sulfate Concentration	Test Kit Sample @ SP-3C-2	43	12:50	mg/l
Influent Nitrate Concentration	Test Kit Sample @ SP-3C-2	9.0	12:52	mg/l
Effluent Sulfate Concentration	Test Kit Sample @ SP-3C-1	1.0	12:55	mg/l
Effluent Nitrate Concentration	Test Kit Sample @ SP-3C-1	0.0	12:58	mg/l

DAILY MONITORING LOG

Polystyrene Column 2B

Test Sequence 2, 29

Date 10/26/00

Parameter	Location/ID#	Reading	Time	Units
Instantaneous Influent Flow Rate to Column 2B	FI-2B-2 Rotameter	6.0	13:14	gpm
Totalizer Value from Touch-screen	Touch Screen	519	13:14	gallons
influent Pressure to Column 2B	PI-2B-2	12	13:14	psi
Effluent Pressure from Column 2B	PI-2B-1	9	13:14	psi
Differential Pressure across Column 2B	PI-2B-2 minus PI-2B-1	3	13:14	psi
Influent Sulfate Concentration	Test Kit Sample @ SP-2B-2	61	13:12	mg/l
Influent Nitrate Concentration	Test Kit Sample @ SP-2B-2	7.0	13:15	mg/l
Effluent Sulfate Concentration	Test Kit Sample @ SP-2B-2	0	13:20	mg/l
Effluent Nitrate Concentration	Test Kit Sample @ SP-2B-2	4.1	13:23	mg/l

DAILY MONITORING LOG
General Parameters

Date 10-29-00

Parameter	Location/ID#	Reading	Time	Units
pH @ Discharge	Discharge	8.1	1930	
Conductivity	Discharge	531		
GAC Influent	PI-01	2		psi
GAC Midpoint	PI-02	0		psi
GAC Effluent	PI-03	0		psi
Bag Filter Influent	PI-04	53		psi
Bag Filter Effluent	PI-05	50		psi
Influent Manifold Pressure	PI-06			psi
Electrical Usage Meter A	Electric Meter	5425		KW-Hours
Electrical Usage Meter B	Electric Meter	1148		KW-Hours

(L) to (R)

| — 42

— 38

— 39

---> 38

DAILY MONITORING LOG

Column 6A

Test Sequence 6A-TS2-AD3- **Date** 10-29-00

Parameter	Location/ID#	Reading	Time	Units
Instantaneous Influent Flow Rate to Column 6A	FI-3C-7 Rotameter	1	1930	gpm
Totalizer Value from Touch-screen	Touch Screen	7974	1930	gallons
Influent Pressure to Column 6A	PI-3C-2	2		psi
Effluent Pressure from Column 6A	PI-3C-1	2		psi
Differential Pressure across Column 6A	PI-3C-2 minus PI-3C-1	0		psi
Influent Sulfate Concentration	Test Kit Sample @ SP-3C-2	40		mg/l
Influent Nitrate Concentration	Test Kit Sample @ SP-3C-2	7.8		mg/l
Effluent Sulfate Concentration	Test Kit Sample @ SP-3C-1	40		mg/l
Effluent Nitrate Concentration	Test Kit Sample @ SP-3C-1	6.7		mg/l

DAILY MONITORING LOG

Column 5

Test Sequence 2, 30 **Date** 10/21/10

Parameter	Location/ID#	Reading	Time	Units
Instantaneous Influent Flow Rate to Column 5	FI-3C-7 Rotameter	6.40	18:42	gpm
Totalizer Value from Touch-screen	Touch Screen	2461	18:42	gallons
Influent Pressure to Column 5	PI-3C-2	19	18:42	psi
Effluent Pressure from Column 5	PI-3C-1	9	18:42	psi
Differential Pressure across Column 5	PI-3C-2 minus PI-3C-1	10	18:42	psi
Influent Sulfate Concentration	Test Kit Sample @ SP-3C-2	≤0	18:44	mg/l
Influent Nitrate Concentration	Test Kit Sample @ SP-3C-2	7.7	18:49	mg/l
Effluent Sulfate Concentration	Test Kit Sample @ SP-3C-1	0		mg/l
Effluent Nitrate Concentration	Test Kit Sample @ SP-3C-1	3.4		mg/l

DAILY MONITORING LOG

Polystyrene Column 2B

Test Sequence 8-30 **Date** 10/29/00

Parameter	Location/ID#	Reading	Time	Units
Instantaneous Influent Flow Rate to Column 2B	FI-2B-2 Rotameter	6.8	19:03	gpm
Totalizer Value from Touch-screen	Touch Screen	3076	19:03	gallons
Influent Pressure to Column 2B	PI-2B-2	18	19:03	psi
Effluent Pressure from Column 2B	PI-2B-1	9	19:03	psi
Differential Pressure across Column 2B	PI-2B-2 minus PI-2B-1	9	19:03	psi
Influent Sulfate Concentration	Test Kit Sample @ SP-2B-2	30	19:03	mg/l
Influent Nitrate Concentration	Test Kit Sample @ SP-2B-2	5.4	19:05	mg/l
Effluent Sulfate Concentration	Test Kit Sample @ SP-2B-2	0	19:09	mg/l
Effluent Nitrate Concentration	Test Kit Sample @ SP-2B-2	0.8	19:10	mg/l

DAILY MONITORING LOG

General Parameters

Date 10/27

Parameter	Location/ID#	Reading	Time	Units
pH @ Discharge	Discharge	8.0	1345	
Conductivity	Discharge	474		
GAC Influent	PI-01	0		psi
GAC Midpoint	PI-02	0		psi
GAC Effluent	PI-03	0		psi
Bag Filter Influent	PI-04	55		psi
Bag Filter Effluent	PI-05	54		psi
Influent Manifold Pressure	PI-06			psi
Electrical Usage Meter A	Electric Meter	5410		KW-Hours
Electrical Usage Meter B	Electric Meter	1144		KW-Hours

60 56 60+ 56

DAILY MONITORING LOG
Column 6A

Test Sequence 2 **Date** 10/27/00

Parameter	Location/ID#	Reading	Time	Units
Instantaneous Influent Flow Rate to Column 6A	FI-3C-7 Rotameter	1	1330	gpm
Totalizer Value from Touch-screen	Touch Screen	34473		gallons
Influent Pressure to Column 6A	PI-3C-2	8		psi
Effluent Pressure from Column 6A	PI-3C-1	3		psi
Differential Pressure across Column 6A	PI-3C-2 minus PI-3C-1	5		psi
Influent Sulfate Concentration	Test Kit Sample @ SP-3C-2	28		mg/l
Influent Nitrate Concentration	Test Kit Sample @ SP-3C-2	6.0		mg/l
Effluent Sulfate Concentration	Test Kit Sample @ SP-3C-1	40		mg/l
Effluent Nitrate Concentration	Test Kit Sample @ SP-3C-1	6.1		mg/l

DAILY MONITORING LOG
General Parameters

Date 6/30/00

Parameter	Location/ID#	Reading	Time	Units
pH @ Discharge	Discharge	8.1	16:45	
Conductivity	Discharge	545		
GAC Influent	PI-01	3		psi
GAC Midpoint	PI-02	0		psi
GAC Effluent	PI-03	0		psi
Bag Filter Influent	PI-04	52		psi
Bag Filter Effluent	PI-05	50		psi
Influent Manifold Pressure	PI-06			psi
Electrical Usage Meter A	Electric Meter	5433		KW-Hours
Electrical Usage Meter B	Electric Meter	1152		KW-Hours

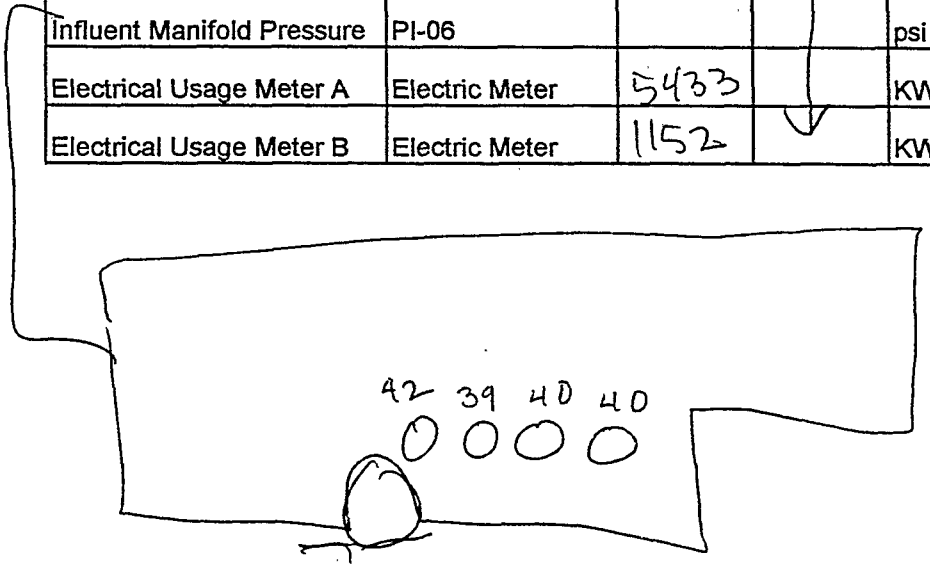

DAILY MONITORING LOG

Column 6A

Test Sequence TS2-AD3 **Date** 10-30-00

Parameter	Location/ID#	Reading	Time	Units
Instantaneous Influent Flow Rate to Column 6A	FI-3C-7 Rotameter	1.	1930	gpm
Totalizer Value from Touch-screen	Touch Screen	8766		gallons
Influent Pressure to Column 6A	PI-3C-2	5		psi
Effluent Pressure from Column 6A	PI-3C-1	4		psi
Differential Pressure across Column 6A	PI-3C-2 minus PI-3C-1	1		psi
Influent Sulfate Concentration	Test Kit Sample @ SP-3C-2	28		mg/l
Influent Nitrate Concentration	Test Kit Sample @ SP-3C-2	7.1		mg/l
Effluent Sulfate Concentration	Test Kit Sample @ SP-3C-1	34		mg/l
Effluent Nitrate Concentration	Test Kit Sample @ SP-3C-1	7.6		mg/l

DAILY MONITORING LOG

Column 5

Test Sequence 231 **Date** 10/30/00

Parameter	Location/ID#	Reading	Time	Units
Instantaneous Influent Flow Rate to Column 5	FI-3C-7 Rotameter	6.8	18:25	gpm
Totalizer Value from Touch-screen	Touch Screen	1328	18:23	gallons
Influent Pressure to Column 5	PI-3C-2	~~6.8~~ 15	18:23	psi
Effluent Pressure from Column 5	PI-3C-1	8	18:23	psi
Differential Pressure across Column 5	PI-3C-2 minus PI-3C-1	7	18:23	psi
Influent Sulfate Concentration	Test Kit Sample @ SP-3C-2	44	18:25	mg/l
Influent Nitrate Concentration	Test Kit Sample @ SP-3C-2	6.5	18:27	mg/l
Effluent Sulfate Concentration	Test Kit Sample @ SP-3C-1	0	18:30	mg/l
Effluent Nitrate Concentration	Test Kit Sample @ SP-3C-1	0.3	18:32	mg/l

OLD NAVY

9/9 481-1012
1422

118.47

DAILY MONITORING LOG

Polystyrene Column 2B

Test Sequence TS2-AD31 **Date** 10-30-00

Parameter	Location/ID#	Reading	Time	Units
Instantaneous Influent Flow Rate to Column 2B	FI-2B-2 Rotameter	6.8	1900	gpm
Totalizer Value from Touch-screen	Touch Screen	2280		gallons
Influent Pressure to Column 2B	PI-2B-2	12		psi
Effluent Pressure from Column 2B	PI-2B-1	6		psi
Differential Pressure across Column 2B	PI-2B-2 minus PI-2B-1	6		psi
Influent Sulfate Concentration	Test Kit Sample @ SP-2B-2	45		mg/l
Influent Nitrate Concentration	Test Kit Sample @ SP-2B-2	6.2		mg/l
Effluent Sulfate Concentration	Test Kit Sample @ SP-2B-2	0		mg/l
Effluent Nitrate Concentration	Test Kit Sample @ SP-2B-2	0.2		mg/l

DAILY MONITORING LOG

General Parameters

Date 10/31

Parameter	Location/ID#	Reading	Time	Units
pH @ Discharge	Discharge	8.0	16:30	
Conductivity	Discharge	496		
GAC Influent	PI-01	3		psi
GAC Midpoint	PI-02	0		psi
GAC Effluent	PI-03	0		psi
Bag Filter Influent	PI-04	55		psi
Bag Filter Effluent	PI-05	51		psi
Influent Manifold Pressure	PI-06			psi
Electrical Usage Meter A	Electric Meter	5440		KW-Hours
Electrical Usage Meter B	Electric Meter	1155		KW-Hours

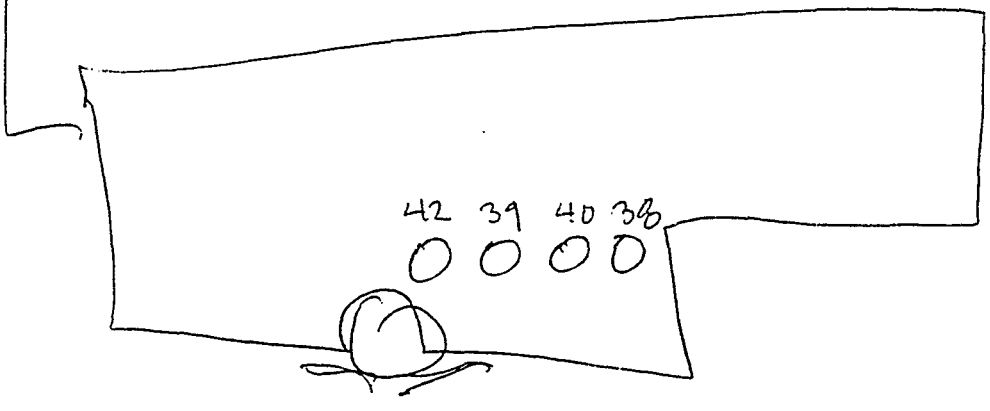

DAILY MONITORING LOG

Column 6A

Test Sequence 2,3 **Date** 10/31/00

Parameter	Location/ID#	Reading	Time	Units
Instantaneous Influent Flow Rate to Column 6A	FI-3C-7 Rotameter	1.0	15:26	gpm
Totalizer Value from Touch-screen	Touch Screen	39962	15:18	gallons
Influent Pressure to Column 6A	PI-3C-2	8	15:26	psi
Effluent Pressure from Column 6A	PI-3C-1	3	15:26	psi
Differential Pressure across Column 6A	PI-3C-2 minus PI-3C-1	5	15:26	psi
Influent Sulfate Concentration	Test Kit Sample @ SP-3C-2	30	15:26	mg/l
Influent Nitrate Concentration	Test Kit Sample @ SP-3C-2	10.8	15:30	mg/l
Effluent Sulfate Concentration	Test Kit Sample @ SP-3C-1	35	16:03	mg/l
Effluent Nitrate Concentration	Test Kit Sample @ SP-3C-1	8.3	16:07	mg/l

DAILY MONITORING LOG

Column 5

Test Sequence 2, 32 **Date** 10/31/00

Parameter	Location/ID#	Reading	Time	Units
Instantaneous Influent Flow Rate to Column 5	FI-3C-7 Rotameter	6.0	13:06	gpm
Totalizer Value from Touch-screen	Touch Screen	567	13:06	gallons
Influent Pressure to Column 5	PI-3C-2	17	13:06	psi
Effluent Pressure from Column 5	PI-3C-1	8	13:06	psi
Differential Pressure across Column 5	PI-3C-2 minus PI-3C-1	9	13:06	psi
Influent Sulfate Concentration	Test Kit Sample @ SP-3C-2	<4	13:10	mg/l
Influent Nitrate Concentration	Test Kit Sample @ SP-3C-2	8.1	13:13	mg/l
Effluent Sulfate Concentration	Test Kit Sample @ SP-3C-1	0.0	13:17	mg/l
Effluent Nitrate Concentration	Test Kit Sample @ SP-3C-1	0.0	13:20	mg/l

DAILY MONITORING LOG

Polystyrene Column 2B

Test Sequence 2, 32 **Date** 10/31/00

Parameter	Location/ID#	Reading	Time	Units
Instantaneous Influent Flow Rate to Column 2B	FI-2B-2 Rotameter	6.0	14:48	gpm
Totalizer Value from Touch-screen	Touch Screen	1164	14:49	gallons
Influent Pressure to Column 2B	PI-2B-2	13	14:49	psi
Effluent Pressure from Column 2B	PI-2B-1	8	14:49	psi
Differential Pressure across Column 2B	PI-2B-2 minus PI-2B-1	5	14:49	psi
Influent Sulfate Concentration	Test Kit Sample @ SP-2B-2	32	14:49	mg/l
Influent Nitrate Concentration	Test Kit Sample @ SP-2B-2	9.0	14:48	mg/l
Effluent Sulfate Concentration	Test Kit Sample @ SP-2B-2	0.0	14:58	mg/l
Effluent Nitrate Concentration	Test Kit Sample @ SP-2B-2	0.5		mg/l