Part 70 Permit Number
47-065-3321

Significant Modification and Administrative Amendments

This Modified Permit Shall Remain in Full Force and Effect

From February 16, 2001 Through April 8, 2004

Issued to:

UNITED STATES PIPE AND FOUNDRY COMPANY, INC.
2501-2701 CHESTNUT STREET
CHATTANOOGA, TENNESSEE 37408

Designated Representative:
Dennis Urbaniak

TELEPHONE: (423) 752-3912

Responsible official:

Agreed to By: _____
David J. Diederich
Plant Manager

An Application For Renewal Must Be Submitted to the Director of the Chattanooga-Hamilton County Air Pollution Control Bureau No Later Than September 9, 2003

CHATTANOOGA-HAMILTON COUNTY
AIR POLLUTION CONTROL BUREAU
3511 Rossville Blvd
Chattanooga, Tennessee 37407
(423) 867-4321

_____
Robert H. Colby
Director

Prepared by James V. Ware, P.E.

10946596

MWPS011930

Chattanooga-Hamilton County Air Pollution Control Bureau

7-22-03
file
copy in file
→ copies to Gregg C
& Jim B for
the new file
downstairs
cc. John Pleasant

July 18, 2003

Mr. David Diedrich
Plant Manager
United States Pipe and Foundry Company
2701 Chestnut Street
Chattanooga, TN 37408

RE: Part 70 Permit No. 47-065-3321
Significant Modification

Dear ~~Mr. Diedrich~~ David,

The EPA review of your Part 70 Significant Modification is completed. Please remove the cover sheet from the existing permit and attach it to the enclosed permit that incorporates the modification.

If you have any questions, please contact Cynthia McDaniel at 668-2566 or mcdaniel_c@mail.chattanooga.gov.

Very truly yours,

Robert H. Colby
Director

Enclosure

1250 Market Street, Suite 3020 • Chattanooga, TN 37402-2713 • 423-668-2567 • Fax 423-668-2556
www.apcb.org

MWPS011931

TABLE OF CONTENTS

Subject	Page
Emission Unit Summary	2
Conditions of General Applicability to All Part 70 Sources	5
Conditions Applicable to the Entire Facility	15
Emission Unit Special Conditions	19
Permit Shield	52

The emissions units regulated by this permit are the following:

Emission Unit	Certificate of Operation	Description
101	Previously Unpermitted	Charge Handling
102	3321-30400101-40C	Melting Facility
103	Previously Unpermitted	Hot Metal Transfer
104	Previously Unpermitted	Desulfurization & Slagging
105	3321-30400303-41C	Induction Holding Furnaces
106	3321-30400301-39C	Ductile Treating Process
107	Previously Unpermitted	No. 9 Unit Inoculation & Slagging
108	Previously Unpermitted	No. 10 Unit Inoculation & Slagging
109	3321-30400101-39C	Fitting Plant Pouring & Cooling
110	3321-30400101-39C	No.9 Unit Shakeout
111	3321-30400101-39C	No.10 Unit Shakeout
112	3321-30400340-15C 3321-30400101-38C 3321-30400325-69I 3321-30400325-70I	No. 9 Unit Casting Cleaning
113	3321-30400340-16C 3321-30400299-50C	No.10 Unit Casting Cleaning
114	3321-30400340-15C 3321-30400340-16C 3321-30400360-18C 3321-30400360-19C 3321-30400360-25C 3321-40200101-51C	Grinding, Finishing, & Priming Operation

Emission Unit	Certificate of Operation	Description
115	3321-40200101-36C 3321-40200101-37C 3321-40200101-43C 3321-40200101-52C	Cement Lining Building
116	3321-40200801-42C	Special Coating Operation
118	3321-30400350-35C	No. 10 Unit Airset Mold System
119	3321-30400350-44C 3321-30400350-35C	No. 10 Unit Sand Reclamation
120	3321-30400358-46C	No.9 Unit Greensand Mold System
121	Previously Unpermitted	Shell Cores Process
122	3321-30400398-33C	Airset Core System
123	3321-30400398-34C 3321-30400371-54C 3321-30400371-55C 3321-30400371-56C 3321-30400356-63I 3321-30400357-64I 3321-30400357-65I 3321-30400371-66I 3321-30400371-67I 3321-30400371-68I	Isocure Core System
124	3321-30400398-32C	Pepset Core System
125	3321-40200601-57C	Refractory Coating Operation
126	Previously Unpermitted	Packaging & Shipping Operation
127	3321-30400301-47C 3321-30799999-20C 3321-30799999-21C	Ancillary Fitting Plant Operations
128	3321-30400340-58I 3321-40202599-60I 3321-30400325-71I 3321-30400325-72I	Fusion Bonded Epoxy Process
206	3321-40200101-12C 3321-40200101-13C	Valve & Hydrant Production
207	3321-30400340-04C 3321-30400340-45C 3321-40202599-48C 3321-40202599-49C	Resilient Seat Valve Production
208	3321-30301001-09C 3321-60300103-53C	Ancillary Valve & Hydrant Plant Operations

Emission Unit	Certificate of Operation	Description
301	Previously Unpermitted	Solid Waste Landfill

Conditions of General Applicability

This permittee, United States Pipe and Foundry Company, Inc., is subject to each of the conditions expressed below and is required to comply with them throughout the term of the permit, and by accepting this permit and operating under it United States Pipe and Foundry Company, Inc. agrees to comply with all terms, provisions, limitations and requirements herein.

ALL SECTIONS OF THE CHATTANOOGA AIR POLLUTION CONTROL ORDINANCE CITED IN THIS PERMIT AS SET FORTH IN THIS ORDINANCE AS OF THE DATE OF PERMIT ISSUANCE ARE INCORPORATED HEREIN BY REFERENCE. Section numbers referred to in this permit which are not otherwise identified refer to sections in the Chattanooga Air Pollution Control Ordinance.

1.0. Definitions. Unless specifically defined within an air pollution control ordinance provision referenced elsewhere in this permit, the definitions in §4-2 and §4-53 shall apply. *§4-2; §4-53*

2.0. Severability. If any provision, part of a provision, sentence, clause or phrase in this permit is for any reason declared to be unconstitutional or otherwise invalid by any court of competent jurisdiction, such decision shall not affect the validity of any other portion of this permit, and only such invalid portion shall be elided. *§4-57(a)(5)*

3.0. Compliance.

3.1. The permittee must comply with all conditions of the Part 70 permit. Noncompliance with any permit provision constitutes a violation of either the Chattanooga City Code, Part II, Chapter 4, known as "The Chattanooga Air Pollution Control Ordinance"; the Tennessee Air Quality Act, T.C.A. 68-201-101 *et. seq.;* and/or the federal Clean Air Act, as amended, Title 42 United States Code §7401 *et. seq.* and is grounds for joint and several enforcement action; for permit termination, revocation or modification; or for denial of a permit renewal application. Enforcement by the Board or Bureau Director shall be conducted in accordance with the provisions of §4-4, §4-7, §4-14, §4-15, §4-17, §4-18, §4-20, §4-61, §4-62, §4-63, §4-64, and §4-65, as appropriate to the circumstances. *§4-57(a)(6)(I)*

3.2. It shall not be a defense for a permittee in an enforcement action that it would have been necessary to halt or reduce the permitted activity in order to maintain compliance with the conditions of this permit. *§4-57(a)(6)(ii)*

3.3. This permit may be modified, revoked, reopened and reissued, or terminated for cause. The filing of a request by the permittee for a permit modification, revocation and reissuance, or termination; or the filing of a notification of planned changes or anticipated noncompliance does not stay any condition in this permit. *§4-57(a)(6)(iii)*

3.4. A compliance certification shall be submitted within (12) twelve months after the issuance date of this permit and annually every twelve months thereafter throughout the term of this permit, or such more frequent periods as specified in any applicable requirement included in this permit. The compliance certification shall be submitted to the Chattanooga-Hamilton County Air Pollution Control Bureau in Chattanooga, Tennessee and to Air and EPCRA Enforcement Branch, U.S. EPA Region 4, 61 Forsyth Street, SW, Atlanta, GA 30303. Such certification shall include the

following information:

3.4.1. Identification of each term or condition of the permit that is the basis of the certification;

3.4.2. Compliance status;

3.4.3. Whether compliance was continuous or intermittent;

3.4.4. The method(s) used for determining the compliance status of the source, currently and over the reporting period consistent with §4-57(a)(3);

3.4.5. Where any specific test method requires quality assurance audit samples and the audit result does not validate the source's sample within the specified parameters, the source must retest the stack test until such time as the audit result does validate the sample within the specified parameters; except that the Bureau Director may waive retesting if the source's stack test sample is in compliance with this permit even if not validated within the specified quality assurance parameters. *§4-3(d)*

3.4.6. Such other facts as the Board or Bureau Director may require to determine the compliance status of the Part 70 source; and *§4-57(c)(5)(iii)(E)*

3.4.7. Such additional requirements as may be required for enhanced monitoring compliance certification under Title 42 U.S.C. § 7414(a)(3) and §7661c(b) of the Clean Air Act. *§4-57(c)(5); §4-3(d)*

3.5. The methods set forth in §4-3 shall be applicable for determining compliance with all terms, provisions, limitations and requirements contained in this permit, except where otherwise specifically provided in this permit.

4.0. Property Rights.

This permit does not convey any property rights of any sort or any exclusive privilege. This permit is not assignable except as provided in §4-58 (d)(l)(iv). *§4-57(a)(6)(iv)*

5.0. Information to be Furnished.

The permittee shall furnish to the Bureau Director, within a reasonable period of time, any information that the Board or the Bureau Director may request in writing to determine whether cause exists for modifying, revoking, or terminating the permit or to determine compliance with the permit. Upon request, the permittee shall also furnish to the Board or the Bureau Director copies of records required to be kept by the permit. For information claimed to be confidential, the permittee may furnish such records directly to the Administrator of the U. S. Environmental Protection Agency along with a claim of confidentiality. Eligibility for confidential treatment shall be determined by the Board pursuant to the provisions of §4-19 of the Chattanooga Air Pollution Control Ordinance for information submitted directly to the Bureau Director. An independent determination regarding confidentiality would be made by the Administrator of the U.S. Environmental Protection Agency for information submitted directly to the Administrator. *§4-57(a)(6)(v)*

6.0. Fees. The permittee shall pay fees to the Bureau Director consistent with the fee provisions set forth in §4-60. *§4-57(a)(7)*

7.0. Changes Provided for by Permit. No permit revision shall be required under any economic incentives, marketable permits, emissions trading or similar program or process which is included in the Chattanooga City Code, Part II, Chapter 4, Article III for changes that are provided for in this permit pursuant to such program or process. *§4-57(a)(8)*

8.0. Reasonably Anticipated Operating Scenarios. Contemporaneously with making a change from one operating scenario to another, the permittee must record in a log at the Part 70 source premises a record of the scenarios under which it is operating. *§4-57(a)(9)*

9.0. Acid Precipitation Requirements. Where an applicable requirement of the Clean Air Act is more stringent than an applicable requirement of regulations promulgated under Title IV of the Clean Air Act and incorporated by reference at §4-52(d), both provisions are herein incorporated into this permit by reference and shall be legally enforceable. This source does not lawfully hold any allowance under Title IV of the Clean Air Act. *§4-57(a)(1)(ii)*

10.0. Federal Enforceability. All terms and conditions in this Part 70 permit, including any provisions designed to limit the potential to emit of this Part 70 source, are enforceable by the Administrator of the U.S. EPA and by citizens under the Clean Air Act except as noted in this Item 10:

10.1.	Rule 12	Odors	(Local Only)
10.2.	Rule 14	Nuisances	(Local Only)

Any terms and conditions included in the permit that are not required under the Clean Air Act or under any of its applicable requirements are specifically designated in this permit as not being federally enforceable under the Clean Air Act. *§4-57(b)(1) and (2)*

11.0. Inspection of Permitted Source(s). Upon presentation of identification and in the performance of their duties, the permittee shall allow the Bureau Director and other employees of the Chattanooga-Hamilton County Air Pollution Control Bureau to perform the following:

11.1. Enter upon the permittee's premises or buildings where a Part 70 source is located or emissions-related activity is conducted, or where records must be kept under the conditions of the permit;

11.2. Have access to and copy, at reasonable times, any records that must be kept under the conditions of the permit;

11.3. Inspect at reasonable times any facilities, equipment (including monitoring and air pollution control equipment), practices, or operations regulated or required under the permit; and

11.4. Sample or monitor substances or parameters, and collect and preserve evidence for the purpose of assuring compliance with the permit or applicable requirements thereunder at reasonable times and for taking such other actions as are appropriate under the law in accordance with Item 3.1 of Conditions of General Applicability of this permit.

11.5. For the purposes of Items 11.2, 11.3, and 11.4 of these Conditions of General Applicability, "reasonable times" shall be considered to be customary business hours, unless reasonable cause exists to suspect noncompliance with the Chattanooga Air Pollution Control Ordinance or any "applicable requirement," as defined in §4-53, or with any permit issued thereunder, and the Bureau Director specifically authorizes a designee to inspect a facility at any other time.

11.6. In the alternative, the Bureau Director, other employees of the Chattanooga-Hamilton County Air Pollution Control Bureau, or any other law enforcement officer may obtain a search warrant to obtain, collect and preserve evidence. *§4-16; §4-57(c)(2)*

12.0. Record Retention Requirements.

12.1. All required monitoring data and related support information shall be retained by the permittee for five (5) years after the date of the monitoring sample, measurement, report or application. Support information includes all calibration and maintenance records, all original strip-chart recordings for continuous monitoring instrumentation, copies of all reports, and logs required by the permit. *§4-57(a)(3)(ii)(B)*

12.2. Reporting of Deviations. The permittee shall promptly report all emissions limitations exceedances and all other deviations from permit requirements (including those attributable to malfunctions), the probable cause of such exceedances or deviations, and any corrective actions or preventive measures taken. "Promptly report" shall mean an initial telephone report to the Bureau Director within twenty-four (24) hours after the onset of the exceedance or other deviation, followed up by a written report submitted to the Bureau Director within seven (7) days after the onset of the exceedance or other deviation. Any excess emissions or other deviation that creates an imminent hazard requiring immediate action to protect health or safety must be reported by telephone immediately to the Bureau Director, to the appropriate local emergency response agency, to the appropriate national response agency, and to the Tennessee Emergency Management Agency.
§4-12 and §4-57(a)(3)(iii)(B)

13.0. Emergency Provision.

13.1. Definition. An emergency is any situation arising from sudden and reasonably unforeseeable events beyond the control of the permittee, including acts of God, which situation requires immediate corrective action to restore normal operation, and that causes the permittee to exceed a technology-based emission limitation under the permit, due to unavoidable increases in emissions attributable to the emergency. An emergency shall not include noncompliance to the extent caused by improperly designed equipment, lack of preventative maintenance, careless or improper operation, or operator error. *§4-57(g)*

13.2. An emergency constitutes an affirmative defense to an action brought for noncompliance with such technology-based emission limitations if the conditions of Item 13 of these Conditions of General Applicability are met, unless an ambient air violation occurs as a result of the emergency. The affirmative defense of emergency shall be demonstrated through properly signed, contemporaneous operating logs, or other relevant evidence which establishes that:

13.2.1. An emergency occurred and that the permittee can identify the cause(s) of the emergency; and

13.2.2. The permitted facility was at the time being properly operated; and

13.2.3. During the period of the emergency the permittee took all reasonable steps to minimize levels of emissions that exceeded the emission standards, or other requirements in the permit; and

13.2.4. The permittee submitted telephone notice of the emergency to the Bureau Director within one (1) working day of the time when emission limitations were exceeded due to the emergency, and the permittee submitted a follow up written report to the Bureau within seven (7) days after the onset of the exceedance. This notice must contain a description of the emergency, any steps taken to mitigate emissions, and corrective actions taken. *§4-57(g)*

13.3. In any enforcement proceeding, the permittee seeking to establish the occurrence of an emergency has the burden of proof. *§4-12; 4-57(g)*

13.4. The permittee must employ all reasonable measures to keep emissions to a minimum during start-ups, shutdowns, operation, and emergencies. These measures may include installation and use of alternate control systems, changes in operating methods or procedures, cessation of operation until the process equipment or air pollution control equipment is repaired, maintaining sufficient spare parts, use of overtime labor, use of outside consultants and contractors, and other appropriate means. Exceedances of limitations on emissions that are caused by poor maintenance, careless operation, or any other preventable upset condition or preventable equipment breakdown shall not be considered emergencies, and shall be considered in violation of the emission standard exceeded. *§4-12*

13.5. A log of any operation or failure to operate, start-up, or shutdown resulting in air pollutant emissions in excess of any applicable requirement must be kept at the Part 70 source. This log must record at least the following:

13.5.1. Stack, air pollution control equipment, or emission point involved;

13.5.2. Time excess emissions, start-up, or shutdown began or when excess emissions were first discovered by the source;

13.5.3. Type of exceedance qualifying as a malfunction, or reason for shutdown;

13.5.4. Time start-up or shutdown was complete or time the air pollutant source returned to normal operation after an emissions exceedance;

13.5.5. Documentation that the source was or was not, at the time of the onset of the exceedance, being properly operated;

13.5.6. Documentation of any preventative maintenance of the air pollution control equipment or process equipment or processes that had been completed prior to the emissions exceedance, start-up, or shutdown;

13.5.7. The steps taken by the source during the period of the emissions exceedance, start-up, or shutdown to minimize levels of emissions that exceeded the applicable requirements; and

13.5.8. The magnitude and identity of the excess emissions, expressed in pounds per hour and the units of the applicable emission limitation, and the operating data and calculations used in determining the magnitude of the excess emissions. *§4-12*

13.6. The information required by Items 13.5.1 and 13.5.2 of these Conditions of General Applicability must be entered into the log by the end of the shift during which the exceedance or other deviation began. All required information shall be entered in the log no later than 24 hours after the exceedance or other deviation has ceased or has been corrected. Any later discovered corrections may be added in the log as footnotes with the reason given for the change. There shall be no erasures, obliterations, modifications, or revisions of the log entry except by single line-through and identification of corrections. *§4-12*

13.7. If the Bureau Director or the Administrator of the Chattanooga-Hamilton County Health Department finds that a condition of air pollution exists or is likely to exist, and that it creates any emergency requiring immediate action to protect human health or safety, the mayor with the concurrence of the Bureau Director or the Administrator of the Chattanooga-Hamilton County Health Department shall order persons causing or contributing to the air pollution to reduce or discontinue immediately the emission of air pollutants. Upon issuance of any such order, the Bureau Director shall fix a place and time, not later than twenty-four (24) hours thereafter, for a hearing to be held before the Board. Not more than twenty-four (24) hours after commencement of such hearing, and without adjournment thereafter, the Board shall affirm, modify, or recommend to the mayor that the order be affirmed, modified or set aside. *§4-20*

14.0. Certification. Any application form, report, or compliance certification submitted pursuant to this permit shall contain a certification, as defined in §4-53, by a responsible official, as defined in §4-53, of truth, accuracy, and completeness. Any certification required by this permit shall state that based on information and belief formed after reasonable inquiry, the statements and information in the document are true, accurate, and complete. *§4-56(d)*

15.0. Modifications.

15.1. Administrative amendments to this permit shall be requested and may be granted in accordance with §4-58(d), and only for the reasons set forth therein. The permittee is required to submit an application for an administrative amendment within sixty (60) days after a change of the name of the permittee is registered with the Tennessee Secretary of State.

15.2. Minor permit modifications to this permit shall be requested and may be granted in accordance with §4-58(e)(1) and (2).

15.3. Significant permit modifications to this permit shall be requested and may be granted in accordance with §4-58(e)(3).

15.4. Operational flexibility allows changes within this permitted source without requiring a permit revision, if the changes are not modifications under Title I of the Clean Air Act and the changes do not exceed the emissions allowable under this permit (whether expressed herein as a rate of emissions or in terms of total emissions), provided that:

15.4.1. The permittee provides the U.S. Environmental Protection Agency and the Bureau Director with written notification at least 7 days in advance of the proposed changes; and

15.4.2. For each such change, said written notification shall include a brief description of the change within the permitted source, the date on which the change will occur, any change in emissions, and any permit term or condition that is no longer applicable as a result of the change.

The permit shield described in §4-57(f) shall not apply to any change made pursuant to operational flexibility. *§4-58(i)*

15.5. Installation permit application and issuance requirements in §4-8(a) of the Chattanooga Air Pollution Control Ordinance will apply to this permittee and emissions units located at this Part 70 source if modifications to or new construction of a Part 70 source are subject to the following:

15.5.1. § 4-41, Rule 18 (PSD);

15.5.2. § 4-41, Rule 25.3 (VOC rule for new or modified sources);

15.5.3. § 4-41, Rule 23 (Reasonable and proper controls for process gaseous emissions);

15.5.4. Any standard or other requirement pursuant to regulations promulgated under Title 42 U.S.C. §7411 in Title 40 Code of Federal Regulations Part 60; or

15.5.5. Case-by-case determinations made pursuant to Title 42 U.S.C. §7412(g) and (j) as set forth at §4-53 "Applicable requirement" (4); or

15.5.6. Case-by-case determinations made pursuant to §4-41, Rule 27 (Particulate Matter Controls for New Sources and New Modifications after August 29, 1995). *§4-50*

16.0. Off-Permit Changes.

16.1. An off-permit change is one that:

16.1.1. Is not addressed or prohibited by the permit;

16.1.2. Is not a modification under Title I of the Clean Air Act;

16.1.3. Is not subject to any requirements under Title IV of the Clean Air Act;

16.1.4. Meets all applicable requirements, as described in this permit; and

16.1.5. Does not violate, or cause or contribute to a violation of, any existing permit term or condition.

16.2. A contemporaneous notification shall be submitted to the Bureau Director and to the U.S. Environmental Protection Agency except for changes that qualify as insignificant under Sections 4-56(c)(11) and (c)(12).

16.3. The permittee shall keep a record describing off-permit changes made at the Part 70 source that result in emissions of a regulated air pollutant subject to an applicable requirement, but not otherwise regulated under the permit, and the emissions resulting from those off-permit changes.

16.4. The permit shield described in §4-57(f) of the Chattanooga Air Pollution Control Ordinance shall not apply to any change made pursuant to off-permit changes.*§4-58(j)*

17.0. Permit Reopening. This permit shall be reopened and revised under any of the following circumstances, as set forth in §4-58(f)(1).

17.1. Additional applicable requirements become applicable by amendment of the Chattanooga Air Pollution Control Ordinance to this source and the remaining permit term is 3 or more years. Such reopening shall be completed not later than 18 months after promulgation of the applicable requirement. No such reopening is required if the effective date of the requirement is later than the date on which the permit is due to expire.

17.2. Additional requirements (including excess emissions requirements) become applicable to an affected source as defined in §4-53. Upon approval by the Administrator and amendment of the local air pollution control ordinance, excess emissions offset plans shall be incorporated into the permit.

17.3. The Board or Bureau Director or the Administrator determines that this permit contains a material mistake or that inaccurate statements were made in establishing the emissions standards or other terms or conditions of the permit.

17.4. The Board or Bureau Director or the Administrator determines that the permit must be revised or revoked to assure compliance with the applicable requirements.

Proceedings to reopen and issue a revised permit shall follow the same procedures as apply to initial permit issuance, described in §4-58, and shall affect only those parts of the permit for which cause to reopen exists. Such reopening shall be made as expeditiously as practicable, but only after notice of such intent is provided to this permittee by the Bureau Director at least 30 days in advance of the date that permit is to be reopened. A shorter time period may be provided in the case of an emergency. *§4-58(f).*

This permittee is also subject to reopening for cause by EPA, as described in §4-58(g). *§4-58(g).*

18.0. Rules Applicable to All Permittee Activities. The following conditions apply to all activities of this permittee, including insignificant activities:

18.1. Nitrogen Oxides. The permittee shall comply with §4-41, Rules 2.4, 2.5 and 2.7, regarding emissions of nitrogen oxides.

18.2. Visible Emissions. The permittee shall comply with §4-41, Rule 3, limiting the opacity of visible emissions to twenty (20) percent for an aggregate of five (5) minutes in any one hour period or twenty (20) minutes in any twenty-four hour period. The permittee shall also comply with §4-41, Rule 9, regarding visible emissions from internal combustion engines. In addition, the permittee shall comply with §4-41, Rule 11 limiting opacity from transport and material handling in open air to twenty (20) percent opacity for three (3) minutes in any consecutive sixty-minute period or twenty (20) minutes in a twenty-four hour period. *§4-41, Rule 3, Rule 9 and Rule 11. §4-3(c)(9).*

18.3. Certain Fuels. The permittee shall comply with §4-41, Rule 4, regarding importation, sale, transportation, use or consumption of fuels and sulfur content.

18.4. Prohibition of Hand-Fired Fuel-Burning Equipment. The permittee shall comply with §4-41, Rule 5, regarding hand-fired fuel-burning equipment.

18.5. Open Burning. The permittee is prohibited from conducting open burning except in accordance with §4-41, Rule 6.

18.6. Other Fuel-Burning Equipment. The permittee shall comply with §4-41, Rule 8, regarding other fuel-burning equipment.

18.7. Process Emissions. The permittee shall comply with §4-41, Rule 10, regarding process emissions.

18.8. Odors in Ambient Air. The permittee shall comply with §4-41, Rule 12, regarding emission of objectionable odors. (Local Rule).

18.9. Sulfur Oxides. The permittee shall comply with §4-41, Rule 13, regarding emissions of sulfur oxides.

18.10. Nuisance. The permittee shall comply with §4-41, Rule 14, concerning discharges from any source of air contaminants or other material which shall cause a nuisance. (Local Rule)

18.11. Hazardous Air Pollutants. The permittee shall comply with §4-41, Rule 16.1 through 16.4 regarding emission standards for hazardous air pollutants other than asbestos.

18.12. Asbestos Demolition or Renovation. The permittee shall comply with §4-41, Rule 17, when conducting any demolition or renovation activities at the permitted source.

18.13. Stack Heights. The permittee shall comply with §4-41, Rule 22, regarding good engineering practices for stack heights.

18.14. Particulate Matter Controls for New Sources and New Modifications After August 30, 1995. The permittee shall comply with §4-41, Rule 27 regarding particulate matter controls for any new source or modification for which installation

commences after August 30, 1995.

19.0. Stratospheric Ozone and Climate Protection. The permittee is subject to the standards for recycling and emissions reduction promulgated at Title 40 *Code of Federal Regulations* Part 82, Subpart F, including the use of certified technicians only.

20.0. Dismantled Equipment. The permittee shall report to the Bureau Director within thirty (30) days after the permanent discontinuance or dismantlement of any equipment or activity covered by this permit.
§4-11(a)

21.0. Monitoring. All monitoring and related reporting shall be conducted in compliance with §4-57(a)(3)(ii)(A) and (B).

22.0. Applicable Requirements. In addition to the Conditions of General Applicability, Conditions Applicable to the Entire Facility, and Emission Unit Special Conditions in this permit, "applicable requirements" as defined in §4-53 shall apply.

23.0. Basis of Permit. This permit is being issued based on the statements made and the information provided in the Part 70 permit application submitted under oath by this source.

CONDITIONS APPLICABLE TO THE ENTIRE FACILITY

1.0. Monitoring Reports. In addition to the conditions of general applicability, semiannual compliance monitoring reports are required. The initial report is due within thirty days after the end of the first six-month reporting period following permit issuance. After that, reports will be required at six-month intervals. The following items used for manufacturing at the facility will be included in the compliance report for the preceding rolling twelve-month period:

1.1. Total quantity and VOC content of each VOC-containing coating
1.2. Total usage and VOC content of each sand core and/or mold resin component
1.3. Total quantity and sulfur content of coke used at the melting facility
1.4. Total operating hours of the No.9 Unit Sand Screening Drum (E023)
1.5. Total quantity of triethylamine
1.6. Total quantity and VOC content of each VOC-containing refractory coating
1.7. Total quantity of iron poured at the facility
1.8. Total quantity of iron poured on No. 10 Unit

2.0. Maintenance Plans and Procedures.

2.1. Within twelve months of permit issuance, United States Pipe and Foundry Company, Inc. shall develop and maintain a preventative maintenance plan and procedures for all major air pollution control equipment. At a minimum, the plans shall include the manufacturer's recommendations and recordkeeping of periodic and/or scheduled maintenance activities for the purposes of complying with such plans and procedures. These plans shall be updated as necessary, maintained on site, and available for inspection by Bureau representative upon request during normal business hours. *§4-57*

2.2. For the purpose of this Condition 2.0, major air pollution control equipment shall be defined as all air pollution equipment for which monitoring and inspection is required in this Part 70 permit.

3.0. Insignificant Activities. The following insignificant activities were certified in the United States Pipe and Foundry Company Part 70 permit application to be in compliance with §4-56(c)(12).

3.1. Surface coating and degreasing operations which do not exceed a combined total usage of more than 60 gallons/month of coatings; thinners, clean-up solvents, and degreasing solvents, at any one location.
3.2. All storage tanks with a capacity of no more than 1,000 gallons (including 55-gallon drums used only for storage) except those emitting any hazardous air pollutant.
3.3. Powder coating operations.
3.4. Emergency generators.

4.0. Record Keeping Activities. Records as required under this Part 70 permit shall be kept of the following items for a period of five years:

4.1. Total operating hours of the No.10 Unit Sand Reclamation Equipment (E036 and

E037) and the No.9 Unit Sand Screening Drum (E023)

4.2. All information required as part of Item 13.5 in the Conditions of General Applicability

4.3. All information required as part of Item 1.0 in the Conditions Applicable to the Entire Facility

4.4. All performance evaluations for emissions control systems in accordance with Condition 7.0 in these Condition Applicable to the Entire Facility

4.5. All corrective actions taken as a result of the performance evaluations conducted in accordance with Condition 7.0 in these Conditions Applicable to the Entire Facility

4.6. All information entered into logs as required in Condition 7.0 of these Conditions Applicable to the Entire Facility and the Emission Unit Special Conditions of this Part 70 Permit

5.0. Sulfur Concentration in Coke. The maximum allowable sulfur content of the coke used at this facility shall not exceed 0.7 percent. *Part 70 Permit Application Request by Permittee*

6.0. Visible Emissions from Buildings. Visible emissions from buildings, other than those from stacks or flues, shall not exceed an opacity of five percent for an aggregate of more than five minutes in any one hour or more than twenty minutes in any twenty-four-hour period. *§4-41, Rule 26.20; §4-57*

7.0. Compliance Monitoring.

7.1. Visible Emissions. Daily qualitative visible emissions observations shall be conducted of the following designated emission points while the source is in operation. In the event that visible emissions are observed at or above the designated action level for the individual emission point, a formal visible emission reading shall be conducted in according with U.S. EPA Test Method 9, Title 40 *Code of Federal Regulations* Part 60, Appendix A (July 1, 1996), as supplanted by the provisions of Section 4-3(c)(9) of the Chattanooga Air Pollution Control Ordinance. If the opacity of the observed visible emission is determined to be above the designated action level, corrective action shall be initiated.

7.1.1. Each formal visible emissions reading shall be conducted for a minimum of fifteen consecutive minutes by a certified observer.

7.1.2. U.S. Pipe shall maintain a log of all qualitative and formal visible emissions observations in accordance with the following:

7.1.2.1. The qualitative visible emissions observation log shall contain, at a minimum, the date of the observation, the results of the observation, and the initials of the observer.

7.1.2.2. The formal visible emissions reading log shall contain, at a minimum, the date and time the reading was made, the results of the reading, the name of the observer, and the cause and corrective action taken for the observed emissions.

7.1.2.3. U.S. Pipe shall maintain the logs and original visible emissions observations forms for a period of five years after the date of entry.

7.1.3. Visible emissions monitoring shall be conducted on the following emission points:

Stack ID	Description	Action Level	Allowable
S001	Charge Handling	10%	20%
S003/S004	Cupola	10%	20%
S004	Melting Facility Building	5%	5%
S002	Cupola Baghouse	10%	20%
S007	Ductile Treating & No.9 Unit Shakeout Baghouse	10%	20%
S005/S006	Ductile Building Roof Vents and Ventilators	5%	5%
S008-S015	Main Foundry Building Roof Monitors over Units Nos.9, 4, & 10 Pouring, Cooling, & Shakeout	5%	5%
S022	No.9 Unit Secondary Shakeout Baghouse	10%	20%
S059	Cleaning Shed No.1 Ventilators	5%	5%
S019/S060	Cleaning Shed No.2 Roof Eaves	5%	5%
S062	Old Heat Treat Building Wall Fan	5%	5%
S037	Sand Reclaimer Fines Baghouse	10%	10%
S038	Sand Reclaimer Classifer Baghouse	10%	10%
S053	Shell Core Building Ventilator	5%	5%
S078	Pattern Shop Cyclone	10%	20%
S090	No. 9 Casting Cooling Conveyor Baghouse	10%	10%
S058	GLA Burn-off Oven	5%	10%
S091	FBE Rotoblast Barrels Baghouse	5%	10%

7.2 Differential Pressure Across Baghouses. Daily monitoring of the differential pressure across the designated baghouses shall be conducted while the equipment is in operation. If the differential pressure is observed outside the specified range, an investigation of the cause shall be conducted in accordance with U.S. Pipe and Foundry's written air pollution control equipment maintenance procedures. Once the cause has been determined, corrective action shall be initiated and completed in a timely manner.

7.2.1. United States Pipe and Foundry Company, Inc. shall maintain a log of all differential pressure readings taken for each device. This log shall contain, at a minimum, the date of the observation, the observed reading, the initials of the observer, and if the baghouse is operating outside the indicated range, the corrective action taken. This log shall be maintained for a period of five years after its date of entry.

CONTROL DEVICE ID.	DESCRIPTION	RANGE (INCHES OF WATER)
CD002	Cupola Baghouse	2-12
CD003	Ductile Treating & No. 9 Unit Shakeout Baghouse	1-9
CD005	Large Casting Rotoblast Baghouses	1-9
CD006	No.9 Unit Secondary Shakeout Baghouse	1-8
CD007	No. 9 Casting Automatic Cleaner Baghouse	1-9

CONTROL DEVICE ID.	DESCRIPTION	RANGE (INCHES OF WATER)
CD008	Monorail & 8' Tableblast Baghouse	1-9
CD047	No.9 Casting Cooling Conveyor Baghouse	1-9
CD048	FBE Rotoblast Barrels Baghouse	1-9
CDV08	Rotoblast Baghouse	1-9
CDV10	Airblast Baghouse	1-8

8.0. Emissions Determination. All estimated emissions for this Part 70 Permit shall be the product of the emission factor for a given process and the applicable control efficiencies (including equivalent control efficiencies for wetted sand processes and settling factors). Verification of compliance with the emission limitations of this Part 70 Permit shall be accomplished using the emission calculation method stated above. *§4-57; §4-60*

9.0. Emissions Testing. Emissions testing for this facility, if required by the Director, the Chattanooga-Hamilton County Air Pollution Control Bureau, may consist of particulate matter, sulfur dioxide (SO_2), nitrogen oxides (NO_x), carbon monoxide (CO), volatile organic compounds (VOC), and hazardous air pollutants (HAP) testing, and shall be performed in accordance with the U.S. EPA Test Methods contained in Title 40 *Code of Federal Regulations* Part 60, Appendix A (July 1, 1996), and in accordance with the provisions in Section 4-3 of the Chattanooga Air Pollution Control Ordinance. *§4-3; §4-57(c)(1)*

10.0. Replacement of Equipment. The addition of air pollution control equipment to achieve additional emissions reductions and/or the replacement of air pollution control equipment with air pollution control of equal or greater control efficiency for each pollutant controlled by the original equipment are changes that qualify as operational flexibility with the following exception. The exception is that the air pollution control technology required by any regulation promulgated pursuant to Section 112 of the Clean Air Act codified at Title 40 *Code of Federal Regulations* Part 63, including control measures employed to demonstrate early reductions of hazardous air pollutants, is not eligible for replacement under operational flexibility. Operational flexibility changes are subject to the notification requirements of Paragraph 15.4 in the Conditions of General Applicability.

11.0. Usage of Equivalent Materials. United States Pipe and Foundry Company, Inc. may, at its discretion, employ the use of equivalent raw materials in plant operations. Equivalent raw materials are materials whose emissions of regulated air pollutants from the effected emission unit(s) shall not exceed the emissions allowed under this permit. No later than seven days prior to the change, United States Pipe and Foundry Company, Inc. shall provide to the Chattanooga-Hamilton County Air Pollution Control Bureau an analysis of the projected hourly emission rate of all regulated air pollutants, including hazardous air pollutants, based on this change in the raw materials. *Part 70 Permit Application Request by Permittee*

EMISSION UNIT SPECIAL CONDITIONS

EMISSION UNIT 101 – CHARGE HANDLING

Charge Handling Equipment (E001)

1.0. The maximum emissions of particulate matter resulting from charge handling shall be limited to 8.57 pounds per hour and 37.53 tons per year. *§4-2; §4-57; §4-60*

2.0. Visible emissions from material handling shall not exceed an opacity of twenty percent for an aggregate of more than three minutes in any one hour or more than twenty minutes in any twenty-four-hour period. *§4-41, Rule 11.1*

EMISSION UNIT 102 – MELTING FACILITY

Cupola (E002)
Cupola Afterburner (CD001)

1.0. The maximum emissions of particulate matter from the melting facility shall be limited to 4.95 pounds per hour and 21.68 tons per year. Compliance with this emissions limitation shall be demonstrated by venting all captured cupola emissions through the Cupola baghouse (CD002). This Cupola baghouse shall be in operation at all times during cupola operation except in accordance with Condition 13.0 of the Conditions of General Applicability. *§4-2; §4-57*

2.0. Operation of the Cupola baghouse (CD002) shall be within the operational pressure drop range determined in accordance with the compliance monitoring requirements in Condition 7.2 of the Conditions Applicable to the Entire Facility. *§4-57*

3.0. Preventative maintenance on the Cupola baghouse (CD002) shall be performed in accordance with United States Pipe and Foundry Company's written plans and procedures described in Condition 2.0 of the Conditions Applicable to the Entire Facility. These plans and procedures shall be maintained on the premises and available for inspection by representatives of the Chattanooga-Hamilton County Air Pollution Control Bureau during normal business hours. *§4-57*

4.0. Visible emissions from the Melting Facility shall not exceed an opacity of twenty percent for an aggregate of more than five minutes in any one hour or more than twenty minutes in any twenty-four-hour period. *§4-41, Rule 3.1*

5.0. During startup and shutdown of the cupola, the owner or operator of the melting facility shall make such provisions or modifications as may be necessary so that visible emissions from the startup and shutdown of the cupola shall not exceed an opacity of twenty percent for an aggregate of more than five minutes in any one hour or more than twenty minutes in any twenty-four-hour period and so that mass emissions do not exceed 0.020 grains per dry standard cubic foot. *§4-41, Rule 3.1, Rule 26.12; §4-57*

6.0. The maximum emissions of sulfur dioxide (SO_2) from the melting facility shall be limited to 6.55 pounds per hour and 28.66 tons per year. This emissions limitation shall be met by a maximum sulfur content of 0.7 percent by weight in the coke used as fuel in the cupola and by burning only natural gas or No.2 fuel oil as fuel in the cupola afterburner. *§4-2; §4-57; Part 70 Permit Application Request by Permittee*

7.0. The maximum allowable emissions of nitrogen oxides (NO_x) from the melting facility shall be 20.02 pounds per hour and 87.69 tons per year. This emissions limitation shall be met by burning only natural gas or No.2 fuel oil as fuel in the cupola afterburner. *§4-2; §4-41, Rule 2; §4-57*

8.0. All combustion emissions limitations shall be met by burning only natural gas or No.2 fuel oil as fuel in the cupola afterburner (CD001). *§4-57*

9.0. Operation of the cupola afterburner (CD001) shall be performed according to the permittee's written plans and procedures and the manufacturer's recommendations. These plans and procedures shall be such as to insure adequate residence time and operating temperature for proper control efficiency. These operational plans and procedures shall be maintained on the premises and available for inspection by representatives of the Chattanooga-Hamilton County Air Pollution Control Bureau during normal business hours. *§4-57*

10.0. The cupola afterburner (CD001) shall be operated at a minimum temperature of 1100°F whenever melting operations are conducted. This temperature shall be logged hourly. Continuous monitoring of the operating temperature by strip or circular chart recorder shall satisfy this monitoring requirement. *§4-57*

11.0. Preventative maintenance on the cupola afterburner (CD001) shall be performed accordance to United States Pipe and Foundry Company's written plans and procedures. These maintenance plans and procedures shall be maintained on the premises and available for inspection by representatives of the Chattanooga-Hamilton County Air Pollution Control Bureau during normal business hours. *§4-57*

EMISSION UNIT 103 – HOT METAL TRANSFER

Hot Metal Transfer from Melting (E003)

1.0. The maximum emissions of particulate matter resulting from hot metal transfer shall be limited to 2.08 pounds per hour and 9.12 tons per year. *§4-2; §4-57; §4-60*

2.0. Visible emissions from material handling shall not exceed an opacity of twenty percent for an aggregate of more than three minutes in any one hour or more than twenty minutes in any twenty-four-hour period. *§4-41, Rule 11.1*

EMISSION UNIT 104 – DESULFURIZATION & SLAGGING

Desulfurization Process (E004)

EMISSION UNIT 105 – INDUCTION HOLDING FURNACES

Hot Metal Transfer to Holding Furnace (E005)
Holding Furnace Preheat (E006)

EMISSION UNIT 106 – DUCTILE TREATING PROCESS

Treating Ladles (E007)

1.0. Emission limitations for particulate matter for these Emission Units shall be:

1.1. The maximum emissions of particulate matter from Emission Unit 104 (Desulfurization and Slagging E004) shall be limited to 12.31 pounds per hour and 53.92 tons per year. *§4-2; §4-57; §4-60*

1.2. The maximum emissions of particulate matter from Emission Unit 105 (Hot Metal Transfer to Holding Furnace E005 and Holding Furnace Preheat E006) shall be limited to 0.67 pounds per hour and 2.93 tons per year. *§4-2; §4-57; §4-60*

1.3. The maximum emissions of particulate matter from Emission Unit 106 (Ductile Treating Process) shall be limited to 0.756 pounds per hour and 3.312 tons per year. Compliance with this emissions limitation shall be demonstrated by the operation of an emissions capturing system. All captured emissions from ductile treating shall be vented through the Ductile Treating and No.9 Unit Shakeout baghouse (CD003). This baghouse shall be in operation at all times during ductile treating except in accordance with Condition 13.0 of the Conditions of General Applicability. *§4-2; §4-57*

1.4. Particulate emissions from the Ductile Treating and No.9 Unit Shakeout baghouse (CD003) stack (S007) shall not exceed 12.86 pounds per hour. These baghouse stack emissions consist of the combined emissions from the Ductile Treating Process (Emission Unit 106) and No.9 Unit Shakeout (Emission Unit 114). *§4-41, Rule 26.12*

2.0. Operation of the Ductile Treating and No.9 Unit Shakeout baghouse (CD003) shall be within the operational pressure drop range determined in accordance with the Compliance Monitoring requirements in Condition 7.2 of the Conditions Applicable to the Entire Facility. *§4-57*

3.0. The maximum emissions of sulfur dioxide (SO_2) from the Induction Holding Furnace Pre-heaters shall be limited to 0.0004 pounds per hour and 0.002 tons per year. Compliance with this emission limitation shall be met by burning only natural gas as fuel in the Induction Holding Furnace Pre-heaters. *§4-2; §4-57*

4.0. The maximum emissions of nitrogen oxides (NO_x) from the Induction Holding Furnace Pre-heaters is 0.067 pounds per hour and 0.295 tons per year. Compliance with this emission limitation shall be met by burning only natural gas as fuel in the Induction Holding Furnace Pre-heaters. *§4-2; §4-57; §4-60*

EMISSION UNIT 107 – No.9 UNIT INOCULATION & SLAGGING

No.9 Unit Inoculation Process (E008)

EMISSION UNIT 108 – No.10 UNIT INOCULATION & SLAGGING

No.10 Unit Inoculation (E009)

EMISSION UNIT 109 – FITTING PLANT POURING & COOLING OPERATIONS

No.9 Unit Pouring (E010)
No.9 Unit Cooling (E011)
No.10 Unit Pouring & Cooling (E013)

1.0. The maximum emissions of particulate matter from No.9 Unit Inoculation and Slagging shall be limited to 12.06 pounds per hour and 52.82 tons per year. *§4-2; §4-57; §4-60*

2.0. The maximum emissions of particulate matter from No.10 Unit Inoculation & Slagging operations shall be limited to 4.48 pounds per hour and 19.63 tons per year. *§4-2; §4-57; §4-60*

3.0. Combined emissions of particulate matter from Fitting Plant Pouring & Cooling shall not exceed 21.94 pounds per hour and 96.10 tons per year. *§4-2; §4-57; §4-60*

EMISSION UNIT 110 – No.9 UNIT SHAKEOUT

No.9 Unit Shakeout (E014)

1.0. The maximum emissions of particulate matter from No.9 Unit Shakeout operations shall be limited to 7.277 pounds per hour and 31.87 tons per year. Compliance with this condition shall be demonstrated by the following:

1.1. At all times during No.9 Unit Shakeout operations, an emissions capturing system shall be in operation to minimize fugitive emissions from this source.

1.2. All captured emissions from the No.9 Unit Shakeout shall be vented through the Ductile Treating and No.9 Shakeout Baghouse (CD003). This capture system and baghouse shall be in operation at all times during shakeout operations except in accordance with Condition 13.0 of the Conditions of General Applicability.

§4-2; §4-57; §4-60

2.0. Operation of the Ductile Treating and No.9 Unit Shakeout baghouse (CD003) shall be within the operational pressure drop range determined in accordance with the compliance monitoring requirements in Condition 7.2 of the Conditions Applicable to the Entire Facility. *§4-57*

3.0. Particulate emissions from the Ductile Treating and No.9 Unit Shakeout baghouse (CD003) stack (S007) shall not exceed 12.86 pounds per hour. These emissions consist of combined captured emissions from the Ductile Treating Process (Emission Unit 106) and No.9 Unit Shakeout (E014 of Emission Unit 110). *§4-41, Rule 26.12*

4.0. Preventative maintenance on the Ductile Treating No.9 Unit Shakeout baghouse (CD003) shall be performed in accordance with United States Pipe and Foundry Company's written plans and procedures. These plans and procedures shall be maintained on the premises and available for inspection by representatives of the Chattanooga-Hamilton County Air Pollution Control Bureau during normal business hours. *§4-57*

EMISSION UNIT 111 – No.10 UNIT SHAKEOUT

No.10 Units Shakeout (E015)

1.0. The maximum emissions of particulate matter from No.10 Units Shakeout operations shall be limited to 21.26 pounds per hour and 93.12 tons per year. *§4-2; §4-57; §4-60*

EMISSION UNIT 112 – No.9 UNIT CASTING CLEANING

No.9 Unit Casting Handling (E018)
No.9 Unit Secondary Shakeout (E019)
No.9 Unit Casting Rotoblast Monorail & Table (E021)
Casting Cooling Conveyor (E132)
No.9 Unit Casting Automatic Cleaner (E133)

1.0. Combined emissions of particulate matter resulting from No.9 Unit Casting Cleaning operations shall not exceed 14.70 pounds per hour and 64.37 tons per year. Compliance with this emission limitation shall be demonstrated by the following:

1.1. At all times during No.9 Unit Secondary Shakeout operations, an emissions capturing system shall be in operation to minimize fugitive emissions from this source.

1.2. All captured emissions captured from No.9 Unit Secondary Shakeout shall be vented through the No.9 Unit Secondary Shakeout baghouse (CD006). This baghouse shall be in operation at all times during secondary shakeout operations except in accordance with Condition 13.0 of the Conditions of General Applicability. *§4-57*

1.3. The maximum allowable particulate emissions from the No.9 Unit Secondary Shakeout baghouse (CD006) stack (S022) shall be 2.571 pounds per hour as calculated based on a grain loading of 0.02 grains per dry standard cubic foot and the reported exhaust flow rate. *§4-2; §4-41, Rule 26.12; §4-57*

1.4. All capture emissions from the No.9 Casting Automatic Cleaner shall be vented through the No.9 Casting Automatic Cleaner Baghouse (CD007). This baghouse shall be in operation at all times during rotoblast operations except in accordance with Condition 13.0 of the Conditions of General Applicability. *§4-57*

1.5. The maximum allowable particulate emissions from the No.9 Casting Automatic Cleaner baghouse (CD007) stack (S023) shall be 2.5 pounds per hour. This condition has been determined to be Reasonable and Proper Control by the Director, the Chattanooga-Hamilton County Air Pollution Control Bureau. *§4-2; §4-41, Rule 27.3; §4-57*

1.6. All captured emissions from the No.9 Unit Rotoblast Monorail and Table shall be vented through the Pangborn Monorail and Rotoblast Table baghouse (CD008). This baghouse shall be in operation at all times during monorail and rotoblast table operations except in accordance with Condition 13.0 of the Conditions of General Applicability. *§4-57*

1.7. The maximum allowable particulate emissions from the No.9 Unit Rotoblast Monorail and Table baghouse (CD008) stack (S024) shall be 2.362 pounds per hour based on a grain loading of 0.02 grains per dry standard cubic foot and the reported exhaust flow rate. *§4-2; §4-41, Rule 26.12; §4-57*

1.8. All captured emissions from the No.9 Casting Cooling Conveyor shall be vented through the No.9 Casting Cooling Conveyor baghouse (CD047). This baghouse shall

be in operation at all times during cooling conveyor operations except in accordance with Condition 13.0 of the Conditions of General Applicability. *§4-57*

1.9. The maximum allowable particulate emissions from the No.9 Casting Cooling Conveyor baghouse (CD047) stack (S090) shall be 0.10 pounds per hour. This condition is Reasonable and Proper control as determined by the Director, the Chattanooga-Hamilton County Air Pollution Control Bureau. *§4-41, Rule 27.3; §4-57*

1.10. Preventative maintenance on the No.9 Unit Secondary Shakeout baghouse (CD006), No.9 Casting Automatic Cleaner baghouse (CD007), Pangborn Monorail and Rotoblast Table baghouse (CD008), and the No. 9 Casting Cooling Conveyor baghouse (CD047) shall be performed in accordance with United States Pipe and Foundry Company's written plans and procedures described in Condition 2.0 of the Conditions Applicable to the Entire Facility. These plans and procedures shall be maintained on the premises and available for inspection by representatives of the Chattanooga-Hamilton County Air Pollution Control Bureau during normal business hours. *§4-57*

1.11. Operation of the No.9 Unit Secondary Shakeout baghouse (CD006), No.9 Casting Automatic Cleaner baghouse (CD007), Pangborn Monorail and Rotoblast Table baghouse (CD008), and the No. 9 Casting Cooling Conveyor baghouse (CD047) shall be within the operational pressure drop range determined in accordance with the Compliance Monitoring requirements in Condition 7.2 of the Conditions Applicable to the Entire Facility. *§4-57*

EMISSION UNIT 113 – No. 10 UNITS CASTING CLEANING

12' Rotoblast Table (E017)

1.0. The maximum emissions of particulate matter resulting from No.10 Unit Casting Cleaning operations shall be limited to 0.62 pounds per hour and 2.71 tons per year. Compliance with this emission limitation shall be achieved by the following:

1.1. The exhaust from the 12' Rotoblast Table shall be vented through the Pangborn Large Casting Rotoblast baghouse (CD005). This baghouse shall be in operation at all times during operation of the rotoblast table except in accordance with Condition 13.0 of the Conditions of General Applicability.

1.2. The maximum allowable particulate emissions from the Large Casting Rotoblast baghouse (CD005) stack (S018) shall be 1.735 pounds per hour based on a grain loading of 0.02 grains per dry standard cubic foot and the reported exhaust flow rate.

§4-2; §4-41, Rule 26.12; §4-57

2.0. Preventative maintenance of the Pangborn Large Casting Rotoblast baghouse (CD005) shall be performed in accordance with United States Pipe and Foundry Company's written plans and procedures. These plans and procedures shall be maintained on the premises and available for inspection by representatives of the Chattanooga-Hamilton County Air Pollution Control Bureau during normal business hours. *§4-57*

EMISSION UNIT 114 – GRINDING, FINISHING, & PRIMING

Casting Finishing Area No.1 (E084)
Casting Finishing Area No.2 (E085)
Casting Finishing Area No.3 (E086)
Casting Finishing Area No.4 (E087)
Primer Dip Coating Operation (E088)

1.0. The maximum emissions of particulate matter from Grinding, Finishing, and Priming operations shall be limited to 1.76 pounds per hour and 7.70 tons per year. *§4-2; §4-57; §4-60*

2.0. The volatile organic compound (VOC) content in all surface coatings used in the Primer Dip Coating Operation shall not exceed 3.5 pounds per gallon of coating, less water and exempt solvents, as delivered to the applicator. *§4-2; §4-41, Rule 25.21; §4-57; §4-60*

3.0. A log of the Primer Dip Coating Operation shall be maintained and shall reflect the date and quantity of coating delivered. *§4-57*

EMISSION UNIT 115 – CEMENT LINING BUILDING

Cement Mixing and Lining Stations (E089-E095)
Cement Lining Drying Ovens Nos.1, 3, and 4 (E096-E098)
No.1 and No.3 Dip Paint Lines (E099, E102)
Binks Spray Paint Booth (E100)
Large Fittings Paint Booth (E101)
Coating Drying Ovens Nos.1 and 3 (E103-E104)

1.0. The maximum emissions of particulate matter resulting from operations in the Cement Lining Building shall be limited to 1.05 pounds per hour and 4.6 tons per year. Compliance with this emission limitation shall be demonstrated by the following:

1.1. All captured emissions from the Binks Spray Paint Booth and the Large Fittings Paint Booth shall be vented through their respective dry filter systems (CD034 and CD035). These filter systems shall be in place at all times during paint booth operations except in accordance with Condition 13.0 of the Conditions of General Applicability.

1.2. A visual inspection of the dry filters shall be conducted no less than one time per day of paint booth operation. A log of the filter inspections shall be maintained on site and available for inspection by Bureau representatives during normal business hours. Saturated filters shall be changed in a timely manner before paint booth operations resume.

1.3. The maximum allowable particulate emissions from the Large Fittings Paint Spray Booth exhaust stack (S068) shall be 0.03 pounds per hour. This emissions limitation has been determined to be Best Available Control Technology (BACT) by the Director, the Chattanooga-Hamilton County Air Pollution Control. *§4-8(e)(2)*

1.4. Only natural gas may be burned as fuel in cement lining and coating drying ovens.

§4-2; §4-8; §4-57

2.0. The maximum emissions of sulfur dioxide (SO_2) from the drying ovens shall be limited to 0.002 pounds per hour and 0.009 tons per year. Compliance with this emission limitation shall be demonstrated by burning only natural gas as fuel in the drying ovens. *§4-2; §4-57*

3.0. The maximum emissions of nitrogen oxides (NO_x) from the drying ovens shall be limited to 0.35 pounds per hour and 1.53 tons per year. Compliance with this emission limitation shall be demonstrated by burning only natural gas as fuel in the drying ovens. *§4-2; §4-57*

4.0. The volatile organic compound (VOC) content of all coatings applied in the Cement Lining Building shall not exceed 3.5 pounds per gallon less water and exempt solvents as delivered to the applicator. A log shall be maintained of the data reflecting the date and quantity of coatings and cleaning solvents used during operations in the Cement Lining Building. This condition has been determined to be Best Available Control Technology (BACT) by the Director, the Chattanooga-Hamilton County Air Pollution Control Bureau. *§4-41, Rule 25.21; §4-57; §4-60*

EMISSION UNIT 116 – SPECIAL COATINGS OPERATION

Special Coating Spray Booth (E105)
Special Coating Drying Oven (E106)

1.0. The maximum emissions of particulate matter resulting from the Special Coatings Operation shall be limited to 0.993 pounds per hour and 4.37 tons per year. Compliance with this emission limitation shall be demonstrated by the following:

1.1. The exhaust from the Special Coating Spray Booth shall be vented through the dry filter system (CD036). This filter system shall be in place at all times during spray booth operations.

1.2. A visual inspection of the dry filters shall be conducted no less than one time per day of spray booth operation. A log of these filter inspections shall be maintained on site and available for inspection by Bureau representatives during normal business hours. Saturated filters shall be changed in a timely manner before spray booth operations resume.

1.3. Only natural gas may be burned as fuel in the Special Coatings Drying Oven.

§4-2; §4-57

2.0. The maximum emissions of sulfur dioxide (SO_2) resulting from the Special Coating Drying Oven shall be limited to 0.008 pounds per hour and 0.04 tons per year. Compliance with this emission limitation shall be demonstrated by burning only natural gas as fuel in the Special Coating Drying Oven. *§4-2; §4-57*

3.0. The maximum emissions of nitrogen oxides (NO_x) resulting from the Special Coating Drying Oven shall be limited to 0.12 pounds per hour and 0.53 tons per year. Compliance with this emission limitation shall be demonstrated by burning only natural gas as fuel in the Special Coatings Drying. *§4-2; §4-57*

4.0. The volatile organic compounds (VOC) content of all coatings used in the Special Coatings Operation shall not exceed 3.5 pounds per gallon of coating less water and exempt solvents as delivered to the applicator. A log shall be maintained of the data reflecting the amount, date, and type of coatings and solvents used in the Special Coating Operation. This condition has been determined to be Best Available Control Technology (BACT) by the Director, the Chattanooga-Hamilton County Air Pollution Control Bureau. *§4-41, Rule 25; §4-57*

EMISSION UNIT 118 – No.10 UNIT AIRSET MOLD SYSTEM

Pneumatic Sand Transporter to Mold Sand Silo (E040)
Sand Heaters (E041)
Sand Mixers (E042)
Mold Forming (E043)

1.0. The maximum emissions of particulate matter resulting from the No.10 Unit Airset Mold System shall be limited to 0.55 pounds per hour and 1.98 tons per year. Compliance with this emission limitation shall be demonstrated by the following:

1.1. The exhaust from silo loading shall be vented through the No.10 Unit Mold Sand Tank baghouse (CD019). This baghouse shall be in operation at all times during the silo loading process except in accordance with Condition 13.0 of the Conditions of General Applicability. *§4-41, Rule 27; §4-57*

1.2. The maximum allowable particulate emissions from the No.10 Unit Mold Sand Tank baghouse (CD019) stack (S041) shall be 0.005 pounds per hour. *§4-41, Rule 27*

1.3. The exhaust from pneumatic transport operations shall be vented through the No.10 Unit Mold Sand Heaters baghouse (CD020). This baghouse shall be in operation at all times during sand transport and sand heater operation except in accordance with Condition 13.0 of the Conditions of General Applicability. *§4-41, Rule 27; §4-57*

1.4. The maximum allowable particulate emissions from the No.10 Mold Sand Heaters baghouse (CD020) stack (S008B) shall be 0.01 pounds per hour. *§4-41, Rule 27*

1.5. The exhaust from the No.10 Unit Mold Sand mixers shall be vented through the No.10 Unit Mold Sand Mixer No.1 baghouse (CD021) and No.10 Unit Mold Sand Mixer No.2 baghouse (CD022). These baghouses shall be in operation at all times during sand transport and sand heater operation except in accordance with Condition 13.0 of the Conditions of General Applicability. *§4-41, Rule 27; §4-57*

2.0 Volatile organic compound emissions from the No. 10 Unit Airset Mold System shall be limited to 37.64 tons per twelve consecutive months. Compliance with this limitation shall be demonstrated through Condition 3.0. *§4-41, Rule 25; §4-57*

3.0 The total iron poured on No. 10 Unit shall not exceed 20,166 tons per consecutive twelve months. A monthly log of iron poured on No. 10 Unit shall be maintained. At a minimum, the log shall contain the date, the amount of iron poured for the month, the amount of iron poured for the previous twelve months, and the initials of the operator. *§4-41, Rule 25, Rule 27; §4-57*

EMISSION UNIT 119 – No.10 UNIT SAND RECLAMATION

Size Reduction Process (E036)
Classifier Process (E037)
MacCawber Pneumatic Sand Transporter to Reclaimed Sand No.1 Bulk Silo (E038)
MacCawber Pneumatic Sand Transporter to New Sand No.2 Bulk Silo (E039)

1.0. The maximum emissions of particulate matter resulting from the No.10 Unit Sand Reclamation process shall be limited to 0.064 pounds per hour and 0.23 tons per year. Compliance with this emission limitation shall be achieved by the following:

1.1. All emissions from the sand reclaimer and size reducer shall be vented through the Fines Baghouse (CD016). This baghouse shall be in operation at all times during sand reclamation and size reduction except in accordance with Condition 13.0 of the Conditions of General Applicability. *§4-57*

1.2. The maximum allowable particulate emissions from the Fines Baghouse (CD016) stack (S037) shall be 0.02 pounds per hour. *§4-41, Rule 27; §4-57*

1.3. All emissions from the classifier shall be vented through the Sand Reclaimer Classifier baghouse (CD017). This baghouse shall be in operation at all times during the clarification process except in accordance with Condition 13.0 of the Conditions of General Applicability. *§4-57*

1.4. The maximum allowable particulate emissions from the Sand Reclaimer Classifier baghouse (CD017) stack (S038) shall be 0.02 pounds per hour. *§4-41, Rule 27; §4-57*

1.5. All emissions from the loading of Reclaimed Sand No.1 and No.2 Bulk Silos shall be vented through the Bulk Sand Silo baghouse (CD018). This baghouse shall be in operation at all times during the loading of these silos except in accordance with Condition 13.0 of the Conditions of General Applicability. *§4-57*

1.6. The maximum allowable particulate emissions the Bulk Sand Silo baghouse (CD018) stack (S040) shall be 0.01 pounds per hour. *§4-41, Rule 27; §4-57*

2.0. The total iron poured on No. 10 Unit shall not exceed 20,166 tons per consecutive twelve months. A monthly log of iron poured on No. 10 Unit shall be maintained. At a minimum, the log shall contain the date, the amount of iron poured for the month, the amount of iron poured for the previous twelve months, and the initials of the operator. *§4-41, Rule 27; §4-57*

3.0. Preventative maintenance of these baghouses (CD016-CD018) shall be performed in accordance with United States Pipe and Foundry Company's written plans and procedures. These plans and procedures shall be maintained on the premises and available for inspection by representatives of the Chattanooga-Hamilton County Air Pollution Control Bureau during normal business hours. *§4-57*

EMISSION UNIT 120 – No.9 UNIT GREENSAND MOLD SYSTEM

Sand Conveying (E022)
Sand Screening Drum (E023)
Sand Return to Storage Silo (E024)
Greensand Mullors A and B (E025)
Herman Mold Machine (E026)
Binder Unloading to Storage Silo (E027)
Binder Conveying (E028)

1.0. The maximum emissions of particulate matter resulting from the No.9 Unit Greensand Mold System shall be limited to 12.98 pounds per hour and 54.16 tons per year. Compliance with this emission limitation shall be demonstrated by the following:

1.1. The exhaust from the sand screening drums shall be vented through the Sand Screening Drum Cyclones (CD009). These cyclones shall be in operation at all times during sand screening operation except in accordance with Condition 13.0 of the Conditions of General Applicability. *§4-57*

1.2. The maximum allowable particulate emissions from the Sand Screening Drum cyclones (CD009) stack (S025) shall be 0.75 pounds per hour. This emissions limitation has been determined to be Best Available Control Technology (BACT) by the Director, the Chattanooga-Hamilton County Air Pollution Control Bureau. *§4-8(e)(2); §4-57*

1.3. Operation of the No.9 Unit Greensand Mold System shall not exceed 4000 hour in any 365-consecutive-day period. This limitation has been determined to be Best Available Control Technology (BACT) by the Director, the Chattanooga-Hamilton County Air Pollution Control Bureau. *§4-8(e)(2); §4-57*

1.4. The exhaust from the loading of the Greensand Binder Storage Silo shall be vented through the No.9 Unit Greensand Binder Storage Silo bin vent filter (CD010). This bin vent filter shall be in operation at all times during silo loading except in accordance with Condition 13.0 of the Conditions of General Applicability. *§4-57*

1.5. The exhaust from Binder Conveyor A shall be vented through the conveyor baghouse (CD012). This baghouse shall be in operation at all times during binder conveying operations except in accordance with Condition 13.0 of the Conditions of General Applicability. *§4-57*

1.6. The exhaust from Binder Conveyor B shall be vented through the conveyor baghouse (CD013). This baghouse shall be in operations at all times during binder conveying operations except in accordance with Condition 13.0 of the Conditions of General Applicability. *§4-57*

1.7. The maximum allowable particulate emissions from each binder conveyor baghouse (CD012-013) shall be 0.457 pounds per hour based on a grain loading of 0.020 grains per dry standard cubic foot and the reported exhaust flow rate. *§4-41, Rule 26.12; §4-57*

EMISSION UNIT 121 – SHELL CORES PROCESS

Shell Core Sand Handling (E082)
Shell Core Heating (E083)

1.0. The maximum emissions of particulate matter from the Shell Cores Process shall be limited to 1.12 pounds per hour and 4.91 tons per year. *§4-41, Rule 10; §4-57; §4-60*

2.0. The maximum emissions of sulfur dioxide (SO_2) resulting from Shell Core Heating operations shall be limited to 0.001 pounds per hour and 0.005 tons per year. Compliance with this emissions limitation shall be demonstrated by burning only natural gas as fuel in the shell core sand heater. *§4-2; §4-57*

3.0. The maximum emissions of nitrogen oxides (NO_x) resulting from Shell Core Heating operations shall be limited to 0.185 pounds per hour and 0.81 tons per year. Compliance with this emission limitation shall be demonstrated by burning only natural gas as fuel in the shell core sand heater. *§4-41, Rule 2; §4-57*

EMISSION UNIT 122 – AIRSET CORE SYSTEM

Airset Binder Bulk Storage Tank (E046)
Airset Acid Bulk Storage Tank (E048)
Pneumatic Conveying for Airset Core Sand Silo (E050)
Sand Heater (E051)
Sand Mixer (E052)
Core Forming (E053)

1.0. The maximum emissions of particulate matter resulting from the Airset Core System shall be limited to 5.314 pounds per hour and 23.28 tons per year. Compliance with this emission limitation shall be demonstrated by the following:

1.1. The exhaust from loading of the airset sand silo shall be vented through the Airset Core Sand Tank baghouse (CD023). This baghouse shall be in operation at all times during the airset sand silo loading process except in accordance with Condition 13.0 of the Conditions of General Applicability.

1.2. The exhaust from the sand heating process shall be vented through the Airset Core Heater cyclone (CD024) and Airset Core Sand Tank baghouse (CD023). This cyclone and baghouse shall be in operation at all times during the sand heating process except in accordance with Condition 13.0 of the Conditions of General Applicability.

1.3. The maximum allowable particulate emissions from the Airset Core Sand Tank baghouse (CD023) stack (S045) shall be 0.171 pounds per hour based on a grain loading of 0.02 grains per dry standard cubic foot and the reported exhaust flow rate.

§4-2; §4-41, Rule 26.12; §4-57

2.0. Preventative maintenance for this baghouse and cyclone (CD023 and CD024) shall be performed in accordance with United States Pipe and Foundry Company's written plans and procedures. These plans and procedures shall be maintained on the premises and available for inspection by representatives of the Chattanooga-Hamilton County Air Pollution Control Bureau during normal business. *§4-57*

EMISSION UNIT 123 – ISOCURE CORE SYSTEM

Isocure Part 1 Bulk Storage Tank (E054)
Isocure Part 2 Bulk Storage Tank (E057)
No.3 Bulk Sand Silo (E060)
No.3 and No.4 Isocure Sand Silo (E061)
No.5 Isocure Sand Silo (E062)
No.3, No.4, & No.5 Isocure Sand Heaters (E063-E065)
No.3, No.4, and No.5 Sand Mixers (E066-E068)
Isocure Machines No.3, No.4, & No.5 (E069-E071)
No.6 & No.7 Isocure Sand Silo (E122)
No.6 & No.7 Sand Heaters (E123-E124)
Isocure Machines No.6, No.7, & No.8 (E129-E131)

1.0. The maximum emissions of particulate matter from the Isocure Core System shall be limited to 1.26 pounds per hour and 5.52 tons per year. Compliance with this emission limitation shall be demonstrated by the following:

1.1. The exhaust from the loading of the No.3 Bulk Sand Silo (E060) shall be vented through the Farr Bulk Sand Silo baghouse (CD025). This baghouse shall be in operation at all times during silo loading operations except in accordance with Condition 13.0 of the Conditions of General Applicability.

1.2. The maximum allowable particulate emissions from the Bulk Sand Silo baghouse (CD025) stack (S048) shall be 0.17 pounds per hour based on a grain loading of 0.020 grains per dry standard cubic foot and the reported exhaust flow rate. These stack emissions are combined emissions from Bulk Sand Silo loading (E060 of Emission Unit 123) and Pepset Sand Heater Operation (E077 of Emission Unit 124). *§4-41, Rule 26.12*

1.3. The exhaust from the loading of the No.3 and No.4 Isocure Sand Silo (E061) shall be vented through the No.3 and No.4 Isocure Sand Silo baghouse (CD026). This baghouse shall be in operation at all times during sand loading operations except in accordance with Condition 13.0 of the Conditions of General Applicability.

1.4. The maximum allowable particulate emissions from the No.3 & No.4 Isocure Sand Silo baghouse (CD026) stack (S049) shall be 0.17 pounds per hour based on a grain loading of 0.020 grains per dry standard cubic foot and the reported exhaust flow rate. *§4-41, Rule 26.12*

1.5. The exhaust from the loading of the No.5 Isocure Sand Silo shall be vented through the No.5 Isocure Sand Silo baghouse (CD027). This baghouse shall be in operation at all times during sand loading operations except in accordance with Condition 13.0 of the Conditions of General Applicability.

1.6. All emissions from the sand heaters (E063-E065) shall be vented through the Sand Heaters cyclones (CD028-030) and the Sand Silo baghouses (CD026-027). These cyclones and baghouse shall be in operation at all times during sand heater operation except in accordance with Condition 13.0 of the Conditions of General Applicability.

1.7. The maximum allowable particulate emissions from the No.5 Isocure Sand Silo baghouse (CD027) stack (S050) shall be 0.17 pounds per hour based on a grain loading of 0.020 grains per dry standard cubic foot and the reported exhaust flow rate. *§4-41, Rule 26.12*

1.8. The exhaust from the loading of the No.6 & No.7 Isocure Sand Silo (E122) and the pneumatic transport of sand to the No.6 & No.7 Sand Heaters (E123-E124) shall be vented through the No.6 & No.7 Isocure Sand Silo baghouse (CD043). This baghouse shall be in operation at all times during silo loading operations except in accordance with Condition 13.0 of the Conditions of General Applicability. *§4-41, Rule 27; §4-57*

1.9. The maximum allowable particulate emissions from the No.6 & No.7 Isocure Sand Silo baghouse (CD043) stack (S086) shall be 0.17 pounds per hour. *§4-41; Rule 27; §4-57*

These limitations and conditions have been determined to be reasonable and proper by the Director, the Chattanooga-Hamilton County Air Pollution Control Bureau. *§4-41, Rule 27; §4-57*

2.0. Preventative maintenance on these control devices (CD025-CD030) shall be performed in accordance with United States Pipe and Foundry Company's written plans and procedures. These plans and procedures shall be maintained on the premises and available for inspection by representatives of the Chattanooga-Hamilton County Air Pollution Control Bureau during normal business hours. *§4-57*

3.0. The maximum allowable emissions of volatile organic compounds (VOC) resulting from Isocure Core Machine Nos. 3, 4, 5, 6, 7, and 8 shall be 28.67 tons per rolling twelve months. Compliance with this emission limitation shall be demonstrated by the following:

3.1. The total usage of isocure core resins shall not exceed 750,000 pounds in any 365 consecutive-day period.

3.2. The weighted average of volatile organic compounds in unreacted resins shall not exceed 30.5% by weight as determined by U.S. EPA reference Method 24, Title 40 *Code of Federal Regulations* Part 60, Appendix A (July 1, 1996) and in accordance with §4-3 of the Chattanooga Air Pollution Control Ordinance.

3.3. The total usage of triethylamine shall not exceed 45,000 pounds in any 365 consecutive-day period.

3.4. Emissions of triethylamine from the isocure process shall be vented through the packed tower acid scrubbers. An operating pH for the acid scrubbers shall be maintained at or below 5.0 as measured at the scrubber drain. This pH reading shall be recorded daily in a log. This log shall be maintained on site and available for inspection by Bureau representative upon request during normal business hours.

This condition has been determined to be Best Available Control Technology (BACT) by the Director, the Chattanooga-Hamilton County Air Pollution Control Bureau. *§4-41, Rule 25.3*

4.0. The owner or operator of this source shall utilize appropriate methods and technology to control onsite gaseous emissions so as to prevent odors from these emissions from being detected beyond the plant property boundary. This condition has been determined to be reasonable and proper by the Director, the Chattanooga-Hamilton County Air Pollution Control Bureau. *§4-41, Rule 12 (Local Only), Rule 23*

EMISSION UNIT 124 – PEPSET CORE MAKING

Pepset Binder Bulk Storage Tank (E073)
Pepset Acid Bulk Storage Tank (E075)
Pepset Sand Heater (E077)
Sand Mixer (E078)
Core Forming (E079)

1.0. The maximum emissions of particulate matter resulting from the pepset core making process shall be limited to 0.41 pounds per hour and 1.81 tons per year. Compliance with this emission limitation shall be demonstrated by the following:

1.1. The exhaust from the sand heater shall be vented through the Pepset Sand Heater cyclone (CD033) and the No. 3 Bulk Sand Silo baghouse (CD025). This cyclone and baghouse shall be in operation at all times during the pepset core making process except in accordance with Condition 13.0 of the Conditions of General Applicability. *§4-57*

1.2. The maximum allowable particulate emissions from the No.3 Bulk Sand Silo baghouse (CD025) stack (S048) shall be 0.01 pounds per hour. *§4-2; §4-57*

2.0. Preventative maintenance for the Pepset Sand Heater cyclone (CD033) and the No.3 Bulk Sand Silo baghouse (CD025) shall be performed in accordance with United States Pipe and Foundry Company's written plans and procedures. These plans and procedures shall be maintained on the premises and available for inspection by representatives of the Chattanooga-Hamilton County Air Pollution Control Bureau during normal business hours. *§4-57*

EMISSION UNIT 125 – REFRACTORY COATING OPERATIONS

Refractory Coating (E072)
Flame-off (E081)

1.0. The maximum emissions of particulate matter resulting from Refractory Coating Flame-off operations (E081) shall be limited to 0.0003 pounds per hour and 0.002 tons per year. Compliance with this emissions limitation shall be demonstrated by burning only natural gas as fuel in the flame-off burner. *§4-2; §4-57; §4-60*

2.0. The maximum emissions of sulfur dioxide (SO_2) resulting from Refractory Coating Flame-off operations (E081) shall be limited to 0.0003 pounds per hour and 0.002 tons per year. Compliance with this emissions limitation shall be demonstrated by burning only natural gas as fuel in the flame-off burner. *§4-2; §4-57; §4-60*

3.0. The maximum emissions of nitrogen oxides (NO_x) resulting from Refractory Coating Flame-off operations (E081) shall be limited to 0.057 pounds per hour and 0.248 tons per year. Compliance with this emissions limitation shall be demonstrated by burning only natural gas as fuel in the flame-off burner. *§4-2; §4-57; §4-60*

4.0. The maximum allowable emissions of volatile organic compounds (VOC) resulting from Refractory Coating operations (E072) shall be 24.74 pounds per hour and 49.49 tons per rolling twelve months. Compliance with this emission limitation shall be demonstrate by multiplying the amount of isopropanol used in the Refractory Coating operation by the emission factor of 2000 pounds of VOC per ton of isopropanol less 50 percent control efficiency for molds cores subject to the flame-off process. *§4-41, Rule 25; §4-57*

EMISSION UNIT 126 – PACKAGING AND SHIPPING AREA

Asphalt Coating Bulk Storage Tank No.1 (E107)
Asphalt Coating Bulk Storage Tank No.2 (E108)
Touchup Coating (E109)

1.0. The maximum allowable emissions of particulate matter resulting from touchup coating operations shall not exceed 0.51 pounds per hour per spray gun. Compliance with this emission limitation shall be met by a zero percent opacity limitation for touchup coating operations. *§4-41, Rule 10; §4-57*

2.0. The volatile organic compound (VOC) content of all coatings used in the packaging and shipping area shall not exceed 3.5 pounds per gallon of coating less water and exempt solvents as delivered to the applicator. This condition has been determined to be Best Available Control Technology (BACT) by the Director, the Chattanooga-Hamilton County Air Pollution Control Bureau. *§4-41, Rule 25.2; §4-57*

3.0. A log shall be maintained of the data reflecting the amount, date, and type of coatings and solvents used in the packaging and shipping area. *§4-57*

EMISSION UNIT 127 – ANCILLARY FITTING PLANT OPERATIONS

Cupola Baghouse Dust Solidification (E110)
Cupola Drying (E111)
Pattern Shop (E113)
Ladle Pre-heat (E114)
Bathhouse Boiler (E115)
Asphalt Hot Oil Heater (E116)

1.0. The maximum allowable emissions of particulate matter resulting from Cupola Baghouse Dust Solidification operations shall be 0.003 pounds per hour and 0.009 tons per year. This emission limitation shall be met by the following:

1.1. The exhaust from the pneumatic conveying of cupola dust in the Cupola Baghouse Dust Solidification process shall be vented through the Cupola Baghouse Dust Solidification baghouse (CD037). This baghouse shall be in operation at all times during Cupola Baghouse Dust Solidification operations.

This condition has been determined to be Best Available Control Technology (BACT) by the Director, the Chattanooga-Hamilton County Air Pollution Control Bureau. *§4-8(e)(2); §4-57*

2.0. The maximum combined emissions of particulate matter from these combustion sources (E111, E114, E115, & E116) shall be limited to 0.051 pounds per hour and 0.192 tons per year. Compliance with this emission limitation shall be demonstrated by burning only natural gas as fuel in cupola drying operations. *§4-2; §4-41, Rule 8.2; §4-57*

3.0. An emission capture system shall be in operation at all times during Pattern Shop (E113) operation except in accordance with Condition 13.0 of the Conditions of General Applicability. *§4-57*

4.0. All captured emissions from the pattern shop equipment shall be vented through the pattern shop cyclone (CD039). This cyclone shall be in operation at all times during pattern shop operation except in accordance with Condition 13.0 of the Conditions of General Applicability. *§4-57*

5.0. The maximum allowable emissions of particulate matter from the pattern shop cyclone (CD039) stack (S078) shall be 3.86 pounds per hour and 16.9 tons per year based on a grain loading of 0.030 grains per dry standard cubic foot and the reported exhaust flow rate. *§4-41, Rule 26.18; §4-57*

6.0. Visual emissions inspection of the emission unit stacks shall be conducted in accordance with Condition 7.1 of the Conditions Applicable to the Entire Facility. *§4-57*

7.0. The maximum combined emissions of sulfur dioxide (SO_2) resulting from these combustion sources (E111, E114, E115, & E116) shall be limited to 0.003 pounds per hour and 0.011 tons per year. Compliance with this emission limitation shall be demonstrated by burning only natural gas as fuel in this equipment. *§4-2; §4-57*

8.0. The maximum combined emissions of nitrogen oxides (NO_x) resulting from these combustion sources (E111, E114, E115, & E116) shall be limited to 0.466 pounds per hour

and 1.76 tons per year. Compliance with this emission limitation shall be demonstrated by burning only natural gas as fuel in this equipment. *§4-2; §4-57*

EMISSION UNIT 128 – FUSION BONDED EPOXY PROCESS

GLA Burn-off Oven with Afterburner (E123)
FBE Rotoblast Barrels (E134, E135, E136)

1.0. The maximum emissions of particulate matter from the FBE Rotoblast Barrels (E134, E135, E136) operation shall be limited to 2.45 pounds per hour and 10.73 tons per year. Compliance with this emissions limitation shall be met by the following:

1.1. All captured emissions from the FBE Rotoblast Barrels (E134, E135, E136) shall be vented through the FBE Rotoblast Barrels baghouse (CD048). This baghouse shall be in operation at all times during rotoblast table cleaner operation except in accordance with Condition 13.0 of the Conditions of General Applicability.

1.2. Operation of the baghouse shall be within the operational pressure drop range determined in accordance with the Compliance Monitoring requirements in Condition 7.2 of the Conditions Applicable to the Entire Facility.

§4-2; §4-41, Rule 27.3; §4-57; §4-60

2.0. The maximum emissions of particulate matter from the GLA Burn-off Oven (E123) shall be limited to 0.10 pounds per hour and 0.438 tons per year. Compliance with this emission limitation shall be demonstrated by burning only natural gas as fuel in this equipment. This condition has been determined to be reasonable and proper control by the Director, the Chattanooga-Hamilton County Air Pollution Control Bureau. *§4-2; §4-41, Rule 27.3; §4-57*

3.0. The maximum emissions of nitrogen oxides (NO_x) from the GLA Burn-off Oven and afterburner shall be limited to 0.60 pounds per hour and 2.63 tons per year. Compliance with this emission limitation shall be demonstrated by burning only natural gas as fuel in this equipment. *§4-41, Rule 2; §4-57*

4.0. The maximum emissions of sulfur dioxide (SO_2) from the GLA Burn-off Oven and afterburner shall be limited to 0.001 pound per hour and 0.0044 tons per year. Compliance with this emission limitation shall be demonstrated by burning only natural gas as fuel in this equipment. *§4-2; §4-57*

5.0. The maximum emissions of volatile organic compounds (VOC) from the GLA Burn-off Oven and afterburner shall be limited to 0.01 pounds per hour and 0.044 tons per year. Compliance with this emission limitation shall be demonstrated by the following:

5.1. Only natural gas shall be burned as fuel in this equipment. This condition has been determined to be Best Available Control Technology (BACT) by the Director, the Chattanooga-Hamilton County Air Pollution Control Bureau. *§4-41, Rule 25.3; §4-57*

5.2. All emissions resulting from the pyrolysis of epoxy coatings shall be vented through the GLA afterburner. This afterburner shall be in operation at all times during GLA oven operations. Operation of this oven and afterburner shall be in accordance with United States Pipe and Foundry Company, Inc.'s written plans and procedures, which

shall include the manufacturer's recommendations. This condition has been determined to be reasonable and proper control by the Director, the Chattanooga-Hamilton County Air Pollution Control Bureau. *§4-41, Rule 23*

EMISSION UNIT 206 – VALVE & HYDRANT PRODUCTION

Small Valve Paint Booth (EV022)
Large Valve Touchup Coating Operation (EV023)
Hydrant Production Paint Booth (EV024)

1.0. The maximum emissions of particulate matter resulting from valve product operations shall be limited to 0.47 pounds per hour and 2.03 tons per year. Compliance with this emissions limitation shall be demonstrated by the following:

1.1. All emissions from the Small Valve Paint Booth shall vented through the dry filter assembly (CDV06). These dry filters shall be in place and the exhaust fan operating at all times during this surface coating operation.

1.2. The maximum hourly stack emissions of particulate matter from the Small Valve Paint Booth stack (SV11) shall be limited to 0.006 pounds per hour.

1.3. All emissions from the Hydrant Production Paint Booth shall be vented through the dry filter assembly (CDV07). These dry filters shall be in place and the exhaust fan shall be operating at all times during this surface coating operation.

1.4. The maximum hourly stack emissions of particulate matter from the Hydrant Production Paint Booth stack (SV13) shall be limited to 0.022 pounds per hour.

1.5. A visual inspection of the dry filters shall be conducted no less than one time per day of paint booth operation. A log of the filter inspections shall be maintained on site and available for inspection by Bureau representative during normal business hours. Saturated filters shall be changed in a timely manner before paint booth operations resume.

§4-2; §4-57; §4-60

2.0. The volatile organic compound (VOC) content for all coatings used in valve and hydrant production shall not exceed 3.5 pounds per gallon of coating, less water and exempt solvents, as delivered to the applicator. A log shall be maintained containing the date and amount of coatings applied in these surface coating operations. This log shall be maintained on the premises and available for inspection upon request by Bureau representatives during normal business hours. These records shall be kept for a period of two years after the date of entry.
§4-2; §4-41, Rule 25.21; §4-57

EMISSION UNIT 207 – RESILIENT SEAT VALVE PRODUCTION

Pangborn Rotoblast Cleaner (EV025)
Pangborn Airblast Cleaner (EV026)

1.0. The maximum emissions of particulate matter resulting from Resilient Seat Valve Production shall be limited to 0.99 pounds per hour and 4.34 tons per year. Compliance with this emission limitation shall be demonstrated by the following:

1.1. The exhaust from the Pangborn Rotoblast Cleaner shall be vented through the RS Valve Cleaning baghouse (CDV08). This baghouse shall be in operation at all times during rotoblast cleaner operation except in accordance with Condition 13.0 of the Conditions of General Applicability. *§4-57*

1.2. The maximum allowable particulate emissions from the RS Valve Cleaning baghouse (CDV08) stack (SV14) shall be 0.219 pounds per hour based on a grain loading of 0.053 grains per dry standard cubic foot and the reported exhaust flow rate. This emission limitation has been determined to be Best Available Control Technology (BACT) by the Director, the Chattanooga-Hamilton County Air Pollution Control Bureau. *§4-8(e)(2); §4-57*

1.3. The maximum allowable particulate emissions from the Airblast baghouse (CDV10) stack (SV15) shall be 0.771 pounds per hour based on a grain-loading of 0.02 grains per dry standard cubic foot and the reported exhaust flow rate. *§4-41, Rule 26.12; §4-57*

EMISSION UNIT 208 – ANCILLARY VALVE & HYDRANT PLANT OPERATIONS

Lead Melting Kettles (EV031-EV032)
Resilient Seat Valve Burn-off Oven (EV033)
Hot Water Heaters No.1 & No.2 (EV034-EV035)
Special Coatings Paint Booth (EV036)

1.0. The maximum emissions of particulate matter from these ancillary operations shall be limited to 0.52 pounds per hour and 2.28 tons per year. Compliance with this emissions limitation shall be demonstrated by the following:

1.1. The maximum allowable emissions of particulate matter from lead kettle heating shall be 0.17 pounds per hour. Compliance with this emission limitation shall be demonstrated by burning only natural gas as fuel in the kettle burners. *§4-41, Rule 8.1*

1.2. Emissions of particulate matter from the Resilient Seat Valve Burn-off Oven stack (SV21) shall not exceed 0.345 pounds per hour. Compliance with this emission limitation shall be demonstrated by burning only natural gas as fuel in this oven. *§4-41, Rule 8.1*

1.3. Hourly emissions of particulate matter from the Special Coatings Paint Booth stack (SV24) shall not exceed 0.002 pounds per hour. Compliance with this emission limitation shall be met by the following:

1.3.1. All emissions from the Special Coatings Paint Booth shall be vented through the dry filter assembly (CDV12). These dry filters shall be in place and the exhaust fan operating at all times during booth operation.

1.3.2. A visual inspection of the dry filters shall be conducted no less than one time per day of paint booth operation. A log of the filter inspections shall be maintained on site and available for inspection by Bureau representatives during normal business hours. Saturated filters shall be changed in a timely manner before paint booth operations resume.

§4-2; §4-57; Part 70 Permit Application Request by Permittee

2.0. The maximum emissions of sulfur dioxide (SO_2) shall be limited to 0.001 pounds per hour and 0.004 tons per year. Compliance with this emissions limitation shall be demonstrated by burning only natural gas as fuel in these combustion sources. *§4-2; §4-57*

3.0. The maximum emissions of nitrogen oxides (NO_x) shall be limited to 0.124 pounds per hour and 0.543 tons per year. Compliance with this emissions limitation shall be demonstrated by burning only natural gas as fuel in these combustion sources. *§4-2; §4-57*

4.0. The volatile organic compound (VOC) content for all coatings used in the special coatings paint booth shall not exceed 3.5 pounds per gallon of coating, less water and exempt solvents, as delivered to the applicator. A log shall be maintained containing the date and amount of coatings applied in these surface coating operations. *§4-41, Rule 25.21; §4-57*

EMISSION UNIT 301 – SOLID WASTE LANDFILL

1.0. Visible emissions from material-handling operations at the solid waste landfill shall not exceed an opacity of ten percent for an aggregate of more than fifteen minutes in any one hour or more than sixty minutes in any twenty-four-hour period. *§4-41, Rule 26.11; §4-57*

2.0. Visible emissions, other than those from material handling operations shall not exceed an opacity of ten percent for an aggregate of more than five minutes in any one hour or more than twenty minutes in any twenty-four-hour period. *§4-41, Rule 3.1; §4-57*

PERMIT SHIELD

At the request of the responsible official who signed and certified to the Part 70 permit application, compliance with the conditions of this permit shall be deemed compliance with any "applicable requirements", as defined in §4-53 of the Chattanooga Air Pollution Control Ordinance, as of the date of permit issuance that are included and specifically identified in this permit. This permit shield does not apply to past applicability determinations made by the facility governing major new source review. No other requirements are identified as applicable as of the date of issuance of this permit to this permittee, but the Director reserves the right to reopen this permit pursuant to Condition 15.0 of the Conditions of General Applicability and to modify this permit pursuant to Condition 17.0 of the Conditions of General Applicability. This permit shield does not alter or affect the following:

(a) The provisions of Title 42 U.S.C. §7603 (emergency orders), including the authority of the Administrator or of the Chattanooga-Hamilton County Air Pollution Control Board or Bureau Director thereunder;

(b) The liability of a permittee of a source for any violation of applicable requirements prior to or at the time of permit issuance;

(c) The applicable requirements of the acid rain program promulgated under Title IV of the Clean Air Act consistent with Title 42 U.S.C. 7651g.(a);

(d) The ability of EPA to obtain information from a source pursuant to Title 42 U.S.C. §7414, or of the Board or Bureau Director to obtain information from a source pursuant to the Chattanooga Air Pollution Control Ordinance or any other provision of local, state or federal law; and *§4-57(f)*

(e) The right of any person to damages or other relief on account of injury to persons or property and to maintain any action or other appropriate proceeding therefor; nor does it abridge, limit, impair, create, enlarge or otherwise affect substantively or procedurally this right. *§4-5(1)*

History
Reg 5817/6555

New Facility — (1)

1. Report by RBW to Board meeting — Oct 20, 1972

— Bus 175 tons iron/day to V&F.

— Emissions to be 7 #/hr.

— Future new cupolas mentioned if increased capacity dictates

— Capital savings of $3 MM predicted

— 21 less people due to centralized melting

— Melt center melt rate can be varied from 18 to 38 tons/hr, 24 hr/day

— This report was recommended for publication as a part of "Engineer's Week" in Chatt. Feb. 21/22, 1973.

2. Sept 2, 1971 ltr. (3rd Qtr. Report) to H. Parr
Indicates funding of Alt. No. 1.

3. Dec. 1, 1970. Ltr. from Scanland to King.
Carl Johnson / Scanland made presentation to Bureau re compl. plan for cupola control
Gave Neel, Dir., Bureau print showing Alternates.

4. News release on Dec. 1, 1970.
— Alt No 1 — $2,000,000 — Consolidate
— Alt No 2 — $5,250,000

MWPS011983

- Pointed out need for iron w/ base metallurgical properties for both types of ~~...~~ products

- Alt 2 to be used if metallurgical problem developed. Alt. 2 would provide new melt ~~...~~ system for V&F w/ controls.

- No melt quantities given.

Oct. 29, 1970, Ltr. from Scanland to King re meeting w/ Dr. Robt Neel, Dr. Bruce Parr, Ch. Eng. was present.

- Scanland Explained to Dr. Neel at meeting that consolidated melting would involve increased melt rate, higher steel charge, higher blast temp. than present open.

- Control at both plants would take 3 yrs. including upgrading entire melt system.

- Compl. by consolidation take 24 to 30 mos and cost $1.5 MM

- If metallurgical problem prevent consol. the CSP comply in 20 to 24 months for $750 M. V&F in 30 to 36 mos. for $4.5 MM.

File 555

UNITED STATES PIPE AND FOUNDRY COMPANY

December 1, 1970

TO: Mr. J. H. King ADDRESS: General Office

FROM: Boyd Scanland ADDRESS: Chattanooga Soil Pipe

SUBJECT: AIR POLLUTION - COMPLIANCE, CHATTANOOGA PLANTS

COPIES TO: Mr. W. L. Turner
Mr. D. L. Saltsman, Jr.
Mr. R. Bates Wilson - Mr. Mac Luna - Mr. Don Wallace
Mr. C. A. Johnson

(Mac has a copy for his file)

RECEIVED DEC 2 1970

Carl Johnson and I made a two-fold visit to the local Air Bureau this morning, combining our presentation of U. S. Pipe's plans for compliance along with an all-media news release. Dr. Neel appeared impressed with our proposal, particularly Alternate No. 1.

Neel had one concern in that we did not specify any equipment in detail, such as manufacturer, size, horsepower, etc. Carl and I explained that these details would develop as engineering and purchasing progressed over the next 18 months and this information could be made available. Neel said he and his engineering group would study drawings and would contact us if any questions developed. However, Neel thought the material we presented today would be sufficient for issuing the necessary permit which he said he would recommend to the Board - with the provision U. S. Pipe would be required to make quarterly progress reports. Neel said quarterly progress reports would be required for all companies operating under Section 4 of the new Ordinance. Carl and I assured Neel U. S. Pipe would agree to the required progress reports.

I had asked Dr. Neel to have the Bureau's Public Relations Department handle the news release, and judging from the press and T.V. present they did an excellent job. There was an oral coverage of U. S. Pipe's plans for the T.V. stations which amounted to my reading from the final news release starting with the third paragraph (U. S. Pipe is proposing in its Alternate No. 1 plan a unique method...) including the fourth, fifth, omitting the sixth and ending with the seventh paragraph (...with cupola emissions controled below an equivalent opacity of 20% (a Ringleman No. 1) on or before October 1972 - almost two years ahead of the Ordinance requirement of July 1, 1974).

I am enclosing a copy of the letter of transmittal presenting the 10 prints of U. S. Pipe's proposal for compliance to Dr. Neel. I will also mail copies to all concerned of the newspaper articles covering this event.

Boyd Scanland

BS:if
enclosure

UNITED STATES PIPE AND FOUNDRY COMPANY
SOIL PIPE DIVISION
P. O. BOX 6129 • CHATTANOOGA, TENNESSEE 37401

December 1, 1970

Dr. R. B. Neel, Director
Chattanooga-Hamilton County Air Pollution Control Bureau
City Hall Annex
Chattanooga, Tennessee

Dear Dr. Neel:

Enclosed are ten (10) prints depicting U. S. Pipe's two alternates for compliance with the local air pollution control ordinance.

Print No. 804-A-24191 illustrates the estimated time schedule for both alternates in "Pert" form.

Prints Nos. 1000A-24241 and 24242 are general arrangements for the bag house control system at Chattanooga Soil Pipe, but such an arrangement for emission control would also be used for the General Foundry under Alternate No. 2.

Prints Nos. 804-A-23983 and 804-A-23982 show the proposed route for transporting molten metal from Chattanooga Soil Pipe to the General Foundry.

Prints Nos. 804-A-23985 and 804-A-23984 are general arrangements to illustrate the method of hot metal transfer and storage in the three induction furnaces at the General Foundry.

Prints Nos. 1000-A-23700, 1000-A-23699 and 1000-A-23698 are for Alternate No. 2 and illustrate the new melting system and storage yards proposed for the General Foundry if the metallurgical tests now under way at the Chattanooga Soil Pipe plant prove unfeasible.

If you have further questions concerning U. S. Pipe's plans for compliance, please call either Mr. C. A. Johnson, Plant Manager, General Foundry, or me.

Sincerely,

Boyd Scanland
Manager of Manufacturing

BS:if
enclosures

SPECIFY
SUPERSPUN®
CAST IRON SOIL PIPE & FITTINGS

CNK

UNITED STATES PIPE AND FOUNDRY COMPANY

November 30, 1970

TO: Mr. J. H. King — ADDRESS: General Office

FROM: Boyd Scanland — ADDRESS: Chattanooga Soil Pipe

SUBJECT: AIR POLLUTION - NEWS RELEASE

COPIES TO: Mr. W. L. Turner
Mr. D. L. Saltsman, Jr.
Mr. R. Bates Wilson - Mr. Mac Luna - Mr. Don Wallace
Mr. C. A. Johnson

DEC 2 1970

ENGINEERING DEPT.

Enclosed is the final draft of the news release regarding our plans for compliance with the new Ordinance.

Boyd Scanland

BS:if
enclosure

Ok
Be sure this is seen by all required - also that it is properly filed so we can use it as reference during design stages.

PRB 6555

MWPS011987

ALL-MEDIA NEWS RELEASE FOR TUESDAY, DECEMBER 1, 1970

(To follow meeting with Dr. Robert Neal of the local Air Pollution Control Board)

United States Pipe and Foundry Company today announced its plans for compliance with what is considered to be one of the most stringent air pollution control ordinances in the United States almost two years ahead of the Ordinance requirement of July 1, 1974.

These plans for compliance are projected to cost $2,000,000 for Alternate No. 1 and $5,250,000 for Alternate No. 2. Both plans furnish cupola emission controls for U. S. Pipe's two foundries located in Chattanooga, Tennessee. The two plants are the General Foundry plant located at 2701 Chestnut Street, and the Soil Pipe Plant at 1000 West 19th Street. These plants provide jobs for approximately 1,500 people.

U. S. Pipe is proposing in its Alternate No. 1 plan a unique method to supply molten metal to both Chattanooga facilities from one set of two cupolas located at the Soil Pipe Plant. This set of two operating cupolas will be provided with the most modern and efficient emission control equipment available.

U. S. Pipe proposes to produce a molten metal at its Soil Pipe Plant having metallurgical properties whereby future treatment in massive induction furnaces by inoculation will produce the high strength cast irons and ductile irons used at the General Foundry and also a soft iron required by the Soil Pipe Plant. A theoretical iron having these properties has been designed by U. S. Pipe's metallurgical research laboratory located in Burlington, New Jersey.

At present the Chattanooga Soil Pipe Plant is now working to produce this form of molten metal on a mass production basis. These production tests are expected to require a minimum of 90 days to prove this process and also provide the necessary time for stack sampling to determine the quantity, size ranges and type of particulates which must be collected by a new bag house collection system. If these tests prove successful, the emissions from U. S. Pipe's cupolas can be reduced to the absolute minimum by operating only one set of the most modern cupolas using the latest developments in bag house control. They are being conducted under the joint control of the two local plants, the Burlington research laboratory and U. S. Pipe's environmental engineering department of Birmingham, Alabama. The tests to date appear most promising.

Alternate No. 1 also includes a heavy duty highway to be constructed on U. S. Pipe property between the two local plants to be used for transporting the molten metal. Cartage will be by special fork trucks carrying 15 tons of this hot metal per load in insulated and covered ladles (thermos bottles). The General Foundry will receive and store the molten metal in two 25-ton and one 15-ton induction furnaces where the metal will be further treated to produce either the high strength gray iron or ductile type iron.

Barring unforeseen delays on the part of the heavy equipment suppliers, Alternate No. 1 should be installed, debugged and operating, with cupola emissions controlled below an equivalent opacity of 20% (a Ringlemann No. 1) on or before October 1972 - almost two years ahead of the Ordinance requirement of July 1, 1974.

If metallurgical problems develop during the test period now underway which would preclude the production of hot metal for both plants by the Soil

Pipe Plant, then Alternate No. 2 provides for separate bag house control systems for the collection of cupola emissions at each plant. Alternate No. 2 also provides for an entirely new and redesigned melting system to replace the system now in use by the General Foundry. The forecasted completion date for Alternate No. 2 is for a complete cupola emission control system operating in full compliance with the Ringlemann No. 1 restriction for the Soil Pipe Plant on or before October 1972 and the same for the General Foundry including a thoroughly new melting system on or before September 1973.

The proposed emission control system under Alternate No. 1 or the two systems under Alternate No. 2 are both to be designed and built using highest engineering standards to provide minimum downtime and highest collection efficiency. All vessels and duct work handling gases exceeding 500 degrees Fahrenheit are to be constructed of heavy steel plate and lined with refractories. The cupola charging doors are to be provided with deep seal hoods to prevent escape of pollutants during charging operations. The cupola emergency dump valve will be provided with a deep water seal to prevent leakage at this critical location. An amply sized slow speed induced draft fan plus an auxiliary standby fan of the same size is proposed for each bag house to prevent outage due to fan vibration problems inherent to this type of emission control system. Fan vibration censors will also be employed to detect this problem. An automatic, fail safe system of temperature controls will be provided behind the after burners and in front of and following the cupola blast air recouperative heater and the final quench vessel. These temperature controls will also modulate the 8,000,000 BTU after burners located in the top of each cupola. The bag house will be compartmentalized with automatic sequential shut-down-and-shake controls and have an air to cloth (fiber glass) ratio of 1.75 to 1.

Under Alternate No. 1 the bag house control system proposed for the Soil Pipe Plant will have sufficient capacity to handle the required melt, produce no carbon monoxide, and have a total particulate loss considerably less than now permitted for process emission weights by the revised Ordinance. Under Alternate No. 2 the bag house control systems proposed for both plants would have sufficient capacity to handle the melt for each plant, they will produce no carbon monoxide, and each will have a total particulate loss of less than permitted by the new Ordinance.

No water pollution problems will be presented by either Alternate since all quenching water will be contained within the system, or totally evaporated and escape as invisible water vapors in the exhaust discharge from the bag house.

Proj 6555

UNITED STATES PIPE AND FOUNDRY COMPANY

October 29, 1970

TO: Mr. J. H. King — ADDRESS: General Office

FROM: Boyd Scanland — ADDRESS: Chattanooga Soil Pipe

SUBJECT: AIR POLLUTION - CHATTANOOGA SOIL PIPE

COPIES TO: Mr. D. L. Saltsman, Jr.
Mr. R. Bates Wilson - Mr. Mac Luna - Mr. Don Wallace
Mr. W. L. Turner - Mr. R. N. Voigt
Mr. C. A. Johnson

Send Slip to O'Cathy - Wilson @ Luna @ This to Otto

I met with Dr. Robert Neel, Director of the local Air Bureau yesterday (10/28/70) along with Mr. H. L. Parr, Chief Engineer and Mr. Al Farmer, Field Survey Officer. Dr. Neel started the meeting by showing me a sheet of paper containing an underexposed color photograph of C.S.P. with its plume and a list of sightings, by time, and individual ratings made by Mr. Byron Strickland and Mr. John Calder (both have NAAPA certificates to prove they have calibrated eye balls). These men each made approximately 20 synchronized sightings covering a time period from 11:00 A.M. through 3:00 P.M. on October 15, 1970. Their ratings ranged from a low of 50% to many highs hitting 100% with averages for the total period of 81% and 82%. According to our records, C.S.P. was melting broken motor blocks at that time, but not from the extremely oily stock melted at night.

After explaining all of the data on this sheet, Neel said the Executive Committee (Air Board) had decided it was more important to start pressure on large industry to comply at an early date rather than expend the Bureau's time on automobiles and open burning. Neel continued telling me this decision would be presented to the Air Board at its next meeting (11/2/70). Neel then added I was the only Board member sufficiently informed on Air Pollution to think for myself, and for this reason the Executive Committee was certain the Board would adopt their proposed program of forced compliance for large industry. I asked Neel what this meant, and he said a No. 1 Ringelmann by October 1972.

DON Please Confirm!!

Neel then asked if U. S. Pipe had formulated plans and a time schedule for compliance. I answered no, and explained the recent amendments to the Ordinance caused all previous thinking to be scrapped and we were now working on an entirely new concept of how to comply at the earliest date with the lowest total expense to both U. S. Pipe's facilities in Chattanooga. Neel interrupted to state U. S. Pipe's Chestnut Street plant had not been selected by the Executive Committee for Ringelmann rating and at present only U. S. Pipe's Soil Pipe plant was "under the gun".

I went on to describe U. S. Pipe's new proposal to consolidate the melting for both plants at Soil Pipe covering the metallurgical problems involved and how experiments are now under way to determine the feasibility of this proposal. Then, if successful, the increased melt rate, the higher percent

What does this mean?

of steel charged, and the higher blast temperature would dictate a much larger emission control system than required by Soil Pipe's present mode of operation. If not successful, then the only other alternate would be a three-year program at the Chestnut Street Plant to upgrade its entire melting and charging system. Neel interrupted again to say this is similar to the problem explained by Wheland for the old section of their plant, and then asked if U. S. Pipe had any idea on time and costs for its consolidated melting plans.

I told him I had attended a meeting at the General Office only the day before where this very same question was the topic of discussion, and the following estimated schedules were evolved:

1. A "PERT"ed time schedule of cost and compliance would probably be completed within the next 60 days which would include all presently known alternates available for compliance.

2. If consolidation of melting appears feasible, and tests are now under way to determine this in the next 90 to 120 days, then it is thought compliance can be achieved in 24 to 30 months at a cost in excess of $1,500,000.00.

3. If consolidation of melting fails due to metallurgical problems, then Soil Pipe could probably reach compliance in 20 to 24 months at a cost of about $750,000.00, and the Chestnut Street Plant 30 to 36 months at a cost in the neighborhood of $4,500,000.00, which includes all new melting facilities.

Neel then said he certainly hoped the consolidated melting project would be successful for both time and cost and thanked me for giving the Bureau such a detailed explanation of U. S. Pipe's problems and plans. He said he would give this information to the Executive Committee tomorrow along with those of the five other plants cited--since only one plant, Crane, had not acknowledged his letter.

Boyd Scanland

BS:if

Boyd Scanland

7... Proj. 6555

UNITED STATES PIPE AND FOUNDRY COMPANY

Engineering Department

MEMORANDUM FOR RECORD

August 24, 1970

Subject: PROJECT 6129 - IMPROVE MELTING FACILITIES - CHATTANOOGA FITTINGS (REFERENCE: PROJECT 6555 - EMISSION CONTROL - CSP)

Introduction

The City of Chattanooga, as have most metropolitan areas, has had a smoke abatement program since 1935. This law was revised, and in December of 1951 a department with inspectors was budgeted and efforts were directed toward smoke abatement, pollution nuisance, inspection, permits and fee collections as related to fuel burning installations. Dustfall sampling has been collected for the past 30 years or so. In July of 1964, a cooperative study of the HEW, City of Chattanooga, and Tennessee Department of Public Health was issued which made pointed charges, conclusions, and recommendations for "cleaning up the polluted air of Chattanooga." This report led to the hiring of a Director of the Bureau of Air Pollution Control (Frank L. Cross, Jr., February 1, 1965) with subsequent activity such as questionnaires to our local plants in March of 1965 along with the installation of four dust sampling stations in the city.

On June 30, 1965, Mr. Cross convened a meeting, which included our plant personnel, and set out to establish an ordinance that would include cupola emissions. Mr. Cross further advised those foundries represented at that meeting that the proposed control ordinance would be copied after the specifications used by the cities of Los Angeles and San Francisco.

During the following months a continuum of meetings, hearings, public petitions, individual damage claims, editorial and newspaper publicity, claims and counter-claims for who is polluting how much (that is so typical of every geographical location in the country which seeks to control air pollution), took place. These events culminated in the passage of an ordinance adopted by both the City of Chattanooga and Hamilton County, effective October 14, 1969. This ordinance as presently worded requires that our two plants must meet an outlet loading of 30.5 to 43.6 pounds/hour by October 14, 1972. During this period the State of Tennessee revised the Act of 1959 including a Number 1 Ringlemann, and the HEW included the city in a Federal Air Quality Control Region.

During the past thirty days the city ordinance has been under review, and every indication is that an equivalent opacity statement will be reinstated in the Chattanooga ordinance. These trends coincide with national trends toward the San Francisco area code.

With the prospect of an equivalent opacity stipulation being included in the Chattanooga ordinance, and the high power requirements and correspondingly high operating costs required for a wet scrubber system to comply with this stipulation, it is strongly recommended that any cupola emission control considerations be limited to a bag house system. This recommendation is supported by our own experience at the Union City Plant, as well as by technical societies and institutions such as AISI and Battelle. Many other cupola foundries have arrived at the same conclusions for the same economic reasons. Specific quotations for emission control systems have borne out these conclusions, that systems designed for outlet loadings of 0.05 GR/SCF or less are most economical (both capital cost and operating cost), when fabric cleaning (bag house) is utilized.

Another factor which is very evident in our visits to other foundries, as well as participation in pollution meetings and hearings, is that any new installation should conform to the best equipment available in the present state of the art. Again, insofar as a foundry cupola is concerned, this is a baghouse.

Analysis of Facilities to Control

U. S. Pipe presently operates two foundries in the City of Chattanooga which have cupolas as their source of molten iron. The following is a comparison of these two operations as they are presently operated:

Item	Fittings Plant	Soil Pipe Plant
1. Metal Source	90" Cupola (acid)	108" Cupola (acid)
A. Blast Air	9500 CFM @ 20 oz.	17,500 CFM @ 20 oz.
B. Hot Blast	None	600°F.
C. Tuyeres	Water cooled protruding	Water cooled protruding
D. Coke Ratio	11.5 to 8.8/1	9.4/1
E. Coke/Flux	6/1	5/1
F. Melt Zone	60"	90"
G. Shell Cooling	None	Internal Water Jackets
2. Melt Rate		
A. Nominal	17 tons/hour	27 tons/hour
B. Maximum	22 tons/hour	42 tons/hour

Item	Fittings Plant		Soil Pipe Plant
3. Length of Campaign	20 hours (maximum)		120 hours
4. Charging	Whiting loose bucket - conveyor coke - Manual stone		Modern skip hoist, automatic coke and stone
5. Charge Size	3000 pounds		6000 pounds
6. Annual Melt			
A. Ideal Capacity @ 50 weeks	110,000 tons (22 TPH @ 20 hours)		252,000 tons (42 TPH @ 24 hours)
B. Tons Poured	47,300 (240 days, 295 shifts)		93,000 (193 days, 579 shifts)
C. Product Made	25,377 tons (July '69 - June '70)		67,775 tons (July '69 - June '70)
7. Present Chemistry	Ductile	Gray	
A. Carbon	3.40-3.55	3.40-3.50	3.60
B. Silicon	1.80-2.00	1.80-2.00	1.90
C. Sulfur	.06-.10	.06-.10	.095
D. Manganese	.25-.40	.75-.85	.40
E. Phos	.04-.08	.10-.15	.45
8. Present Charge			
A. Pig		570 pounds	3000 pounds[1]
B. Cast Scrap			1620 pounds
C. Foundry Steel			720 pounds
D. Plate & Structural	1380 lbs.	1290 lbs.	
E. Returns	1620 pounds	1140 pounds	660 pounds
9. Cost of Iron Consumed	47.00 per ton		46.65 per ton
10. Cost of Melting	37.00 per ton		10.00 per ton

Item	Fittings Plant	Soil Pipe Plant
A. Labor	9.00 per ton	2.00 per ton
B. Material	28.00 per ton	8.00 per ton
11. Total Cost Molten Iron[2]	84.00 per ton	56.65 per ton
12. Shifts Operated	1	3

[1] This high pig charge can go down to NIL with use of more cast.

[2] These costs have been averaged to reflect recent production norms.

The cupola facilities at the soil pipe plant are in excellent condition and represent an advanced state of the art of cupola melting in every respect, other than emission control. The cupolas at the fittings plant, on the other hand, are in extremely marginal condition, insofar as safe and reliable operation is concerned. The raw material system is inefficient and wastes vital space. The coke system has no reserve capacity and relies on railroad contract switching for continuity of operation. The charging crane is in ill repair and has almost reached the limit of its maintenance life. The yard crane runway, which utilizes only 40% of the storage area available, is in need of extensive steel and foundation renovation. The entire system is cramped to the point of making additions, such as an emission control system, unreasonably expensive and difficult.

Summary of Compliance Alternatives

When management considerations are given to capital expenditures for compliance at these two plants (along with existing studies related to an economic balance of production at the Fittings Plant), several alternatives should be considered:

Plan I - Install Emission Control Facilities for Existing Cupolas (both plants)

A.	Chattanooga Soil Pipe	$450,000
B.	Chattanooga Fittings	not recommended

Plan II - Install Emission Control Facilities for Existing Melting Facilities at Soil Pipe and Install New Melting Facilities at the Fittings Plant, Based on Past Economic Studies

A.	Chattanooga Soil Pipe	$ 450,000
B.	Chattanooga Fittings	3,300,000
	TOTAL	$3,750,000

Plan III - Install Emission Control Facilities at Chattanooga Soil Pipe and Transport Iron to the Fittings Plant

A.	Chattanooga Soil Pipe	$ 500,000
B.	Chattanooga Fittings	720,000
	TOTAL	$1,220,000

Plan I has no cost savings, but rather would add cost in operations as well as increased depreciation overhead.

Plan II would decrease metal costs $2.73 per ton on gray iron and $6.84 per ton on ductile iron. This savings would offset the cost of emission control operation, but overhead would increase due to depreciation.

Plan III will decrease the labor in the melting department at the fittings plant 16 men on gray iron and 26 men[1] on ductile iron and a material savings in the present cupola operation of approximately 10.00 per ton in materials. This represents a projected savings of $350,000 per year.

The Chattanooga ordinance requires that on or before October 14, 1970, plans and compliance schedules, furnished by the person responsible for the installation, be submitted to the Director of the Bureau of Air Pollution Control. In order to comply with this stipulation, management recommendations should be made no later than September 21, 1970.

Details of Plans I, II, & III

Plan I - Install Emission Control Facilities for Existing Cupolas (both plants)

This minimum capital proposal would provide for gas capture means, ductwork, afterburners, fans and baghouses at both plants. (This recommendation is made as being the most economical of all the systems quoted for both plants.) Two factors have made this (baghouse) system the most economical; opacity requirements and the water pollution control equipment that would be necessary in a wet scrubber installation.

Cost Estimate

1.	Emission Control System for Soil Pipe	$ 450,000
2.	Emission Control System for Fittings Plant	650,000
3.	Repairs to Yard Cranes	40,000
4.	Repairs to Yard Crane Runway	100,000
5.	Repairs to Charging System	60,000
6.	Repairs to Cupolas	50,000
	TOTAL	$1,350,000

This plan would not result in a savings at either plant, but rather would increase the cost per ton by $2.50 at the soil pipe plant and by $4.50 per ton at the Fittings Plant. In addition, the expenditure for the fittings plant would not provide sufficient iron to meet an economic balanced level of production. For these reasons, this plan is not recommended.

[1] This savings only with SIL-MAG process.

Plan II - Install Emission Control Facilities for Existing Melting Facilities at Soil Pipe and Install New Melting Facilities at the Fittings Plant with Emission Control Equipment

This plan would provide a baghouse system for the soil pipe plant identical to Plan I. At the fittings plant this plan would provide for a new hot blast cupola and duplexing system with related yard and charging system capable of sustaining the numbers 4 and 9 units on a 20-hour schedule at 80 flasks per hour, with capabilities for upgrading to 113 flasks per hour. (See Project 6129 file, memo of March 26, 1970.)

Cost Estimate

1.	Emission Control for Soil Pipe	$ 450,000
2.	Emission Control for Fittings Plant	400,000
3.	Buildings (cupola and furnaces)	100,000
4.	Cranes (ladles and inductors)	60,000
5.	Runways	25,000
6.	45-T Induction Furnace	585,000
7.	Power Supply	25,000
8.	Spare Furnace Shell	275,000
9.	Relocate 15-T Furnace	50,000
10.	Rheinstahl System	30,000
11.	Slag System	20,000
12.	Dumping Frames	35,000
13.	Cupolas	300,000
14.	Charge	120,000
15.	Blower, Heater and Piping	345,000
16.	Charge Make-up Facilities	180,000
17.	Locomotive Cranes	225,000
18.	Track Work	25,000
19.	Cooling Water System	50,000
	TOTAL	$3,300,000

This plan would result in an increase in costs of $2.50 per ton at the soil pipe plant and would result in a savings of $171,000 per year at the fittings plant. This savings would offset the costs of emission control and added depreciation.

Plan III - Install Emission Control Facilities at the Soil Pipe Plant and Transport Iron to the Fittings Plant

This plan would provide a baghouse system for the soil pipe plant with some modifications to the cupola for a large melt zone. Further, this proposal would provide a handling system for batch transportation of metal to the fittings plant (see Drawings 804-A-23982 through 23985) with increased induction holding capacity at the fittings plant.

It is proposed to transfer two 25-ton LeTourneau Forklifts (or purchase) from other plants to use in transporting ladles. It is further proposed to purchase (or transfer) a locomotive crane to handle the increased raw material and switching load at the soil pipe plant.

Cost Estimate

1.	Emission Control System for Soil Pipe	$ 450,000
2.	Modifications at Soil Pipe	50,000
3.	Ladle Handling at Soil Pipe	30,000
4.	Roadway Fencing and Signals	45,000
5.	Ladles	25,000
6.	Ladle Lining Equipment	20,000
7.	Ladle Dumping Frames	25,000
8.	Rheinstahl System	30,000
9.	Slagging System	20,000
10.	Two Forklifts ($100,000 if purchased)	-0-
11.	Locomotive Crane	125,000
12.	Induction Furnace	320,000
13.	Power Source	25,000
14.	Building Modifications	30,000
15.	Pig Machine	25,000
	TOTAL	$1,220,000

This plan will result in a savings of approximately $350,000 per year in labor and materials at the fittings plant, by negating the cupola operation and by changing the labor as follows:

Description	Present	Proposed
Ladle Liner	1	2
Cupola Trough Liner	4	
Cupola Tender	2	
U-Ladle Tender	2	
Charge Crane	2	
Yard Crane	2	
Weighman	2	
Utility	4	2
Temperature Reader	1	
Hot Iron Crane	1	
Forklift & Sample		2
Forklift (ductile)	2	
Innoculator Utility	2	2
Ladle Transfer	4	
Sample Man	2	1
Bottom Prep.	6	
Slag Station		2
TOTALS	37	11

The materials savings will be accomplished through the cupola lining and patching materials no longer required along with the reduction of mechanical and electrical maintenance, tools and safety supplies. This proposal will also save the added operating cost of a second emission control unit.

Plan III requires study by the Operating and Quality Control Departments before cost savings can be pinpointed. Several operating options are open to the two plants involved:

A. Melt low phos and low manganese mix at the soil pipe plant for the required operating hours at the fittings plant. This would probably require ferro-phos innoculation for the iron used for fittings at the soil pipe plant.

B. The present base iron at the fittings plant is calculated for use with the mag coke process on ductile iron. In this plan with two induction furnaces, it would be possible to batch desulfurize iron before it is charged in the small induction furnace and treat with sil-mag. This process would utilize higher carbon and lower silicon base iron and would probably fall within present soil pipe target chemistry (3.60 carbon and 1.80 silicon).

C. A study of projected sales and production forecasts at each operation to determine the necessary balance of melting operating tonnages.

C. M. Luna

CML/as

DATA ON THE CHATTANOOGA
SOIL PIPE CUPOLAS

1.	Make and Size of Cupola(s)	Modern
2.	Number of Cupolas	2
3.	Number of Cupolas Operating Simultaneously	1
4.	Number of Hours Operating Per 24 Hours	120 Hours Cont.
5.	35 Tons per Hour Melted	
6.	Diameter of Cupolas	108"
7.	I.D. Diameter in Melt Zone	90"
8.	I.D. Diameter in Stack	See Attached Sk-1069
9.	Type of Refractory - Acid or Basic	Acid to Neutral
10.	Distance from Top of Charge Door to Top of Stack	See Attached Sk-1069
11.	Charge Door Area (L x W)	6'-10" x 11'-0"
12.	Overall Height (Cupola)	90'
13.	Height of Charging Floor	46'-8"
14.	Roof Line to Cupola Top	24'
15.	Distance Between Cupolas	32'
16.	Tuyere Air Volume	Standard Air-17,600
17.	Type of Blast (Hot or Cold)	Hot - 600°F
18.	Charge Make-up	A. Foundry Returns 1700
	Charge varies from 75% – 20% Pig, adjusting steel scrap as required.	B. Purchased Cast 2177
		C. Scrap Steel 358
		D. Pig Iron 1765
		E. Coke 640
		F. Stone 130
		G. Other Flux-Occasional 6-10#/Charge
15.	Charge Weight	6000 Lbs. Metal
16.	Hot Blast Externally Fired	
17.	Coke Ratio	9.5:1
18.	No percent of Metal Briquettes are used	
19.	Flourspar is present in fluxing agent on occasions	
20.	No afterburners are used.	
21.	For space available for cloth bag dust collector or HE scrubber see drawings	
22.	The allowable emissions under present codes will be discussed at meeting	

22. Plant Description
    A. Production
    B. Type-Gray Iron Melted
    C. Five Days Per Week of Melting

23. Cupola Type and Blast Equipment
    A. Make is a Modern Equipment Co. #12
    B. Type is Conventional w/water jackets
    C. Blast Air is not enriched
    D. Normal Blast Rate is 17 SCFM 23/25 oz.
    E. Carbon Pickup to Metal Carbon in 3.39; Carbon Out 3.50
24. Utilities
    A. Electrical
        1. Current Characteristics of Incoming Power 13,200 Volt 3 PH 60 HZ
        2. Fractional HP Motors shall be 110 Volt, 1 PH 60 HZ
        3. 0-100 HP shall be 440 Volt
        4. 100 and above shall be Schedule C3 440 Volt
        5. Power rate Min. 2.75 Mils Demand Rate $1.05/KW
    B. Water
        1. Type City Quantity Adequate
    C. Natural Gas
        1. Quantity available adequate pressure 40/50 psi
        2. Heat Value 1000 BTU
    D. Plant Air
        1. Quantity 5300CFM Pressure 100 psi
    E. Instrument Air
        1. Quantity No separate supply
25. Auxiliary Equipment Specifications
    A. Motors and Controls make mostly General Electric
    B. Instrumentation Foxboro
    C. Others-This information is available after selection of equipment size and duty.
26. Corporate Evaluation Approach
    A. Favorable consideration given to first five-year cost as compared to one-or two-year costs.
27.
    A. Future plans or considerations that might affect the emission system selection Consideration given to hot blast increase from 600°F to 1000°F or oxygen enrichment.
28. Other Plant Dust Collector
    A. Quantity, type and method of duct disposal of other in-plant dust collectors.

Quantity	Type	Dust Disposal
9	A.A.F. Rotoclone	Sand Systems x Blast Units

29. Water Treatment Facilities
    A. None exist DEWATERING TANK (DRAG CONVEYOR TYPE) 6000 GAL CAPACITY
30. Type of Equipment Bid Required
    A. Turnkey Installations
    B. Local Contractors that are familiar with Plant Site will be made available when the specific type work is designated.
    C. Nearest location of power 19th Street, Water 19th Street, Gas in-plant.
    D. Soil bearings and other data for equipment foundations is not known.
31. Equipment Areas and Engineering Data
    A. Sketchs and/or plant drawings are attached indicating all equipment areas available.
    B. The following plant drawings are available:

1. Foundation
2. Building Steel Drawings
3. Cupola and other equipment

C. The drawings are:
   1. Sk-A1069 - Cupola
   2. D-422-726 - Plan and No. Elev. Melting Facilities
      -727 - Elev. of Skip Charger
      -728 - Plan and Elev. of Cupola Blower & Hot Blast
      -729 - Plan & Elev. of Cupola and Blower House
      -730 - Steel Details of Cupola and Blower House
      -731 - Plan & Elev. Yard Crane Runway

October 13, 1970

Mr. H. L. Parr
Chief Engineer
Air Pollution Control Bureau
Air Quality Control Region #32
Room 201, City Hall Annex
Chattanooga, Tennessee 37402

Dear Sir:

In your undated letters received in August and September of 1970, you requested a listing of all existing equipment and processes that may be sources of air pollution, also existing fuel-burning and existing control equipment.

Attached are Equipment Registration pages 1 thru 10 for the General Foundry at 2701 Chestnut Street and Registration Forms pages 1 thru 3 for the Valve Plant at 2501 Chestnut Street which list all the equipment requested.

Very truly yours,

Carl A. Johnson

Carl A. Johnson
Plant Manager

CAJ/gb

Attachments - 2

MWPS012005

Types of Contaminants

A		E	
B		F	
C		G	
D		O	

EQUIPMENT REGISTRATION FORM FOR

CHATTANOOGA-HAMILTON COUNTY AIR POLLUTION CONTROL BUREAU

Activity Class

1		5	
2		6	
3		7	
4		8	

CONTROL EQUIP.

Firm Name _____ Phone _____ Grid No. _____

Address _____
Street City County Zip

Legal Owner _____ Corp. _____ Part. _____ Indiv. _____

Nature of Business _____ Responsible Person _____ Title _____

List of All Equipment and Processes That May Be Sources of Air Pollution

	Item	Descriptive—General usage Name of Equipment—System or Process including Manufacturer's Name and Model No.	Approximate Location On Premises	Inspection Date	Permit Status	Reinspection Date	Comments
	55	1 - Planer	Carpenter Shop				
	56	1 - Jointer	Carpenter Shop				
	57	2 - Band Saws	Carpenter Shop				
	58	2 - 90" I.D. Steel Shell Cupolas w/60" I.D. refractory lining	South End No. 1				Cupola bottom is dropped
		coke consumption: Approximately 15 tons per 8 hours Blower Output: 10,400 CFM	Foundry Bldg.				
	59	1 - Beardsley & Piper Solvent Drying Unit, Blowing Type, with	west end of shell				
		7-1/2 HP, 1800 RPM motor	core building				
	60	1 - Beardsley & Piper Cooling & Conveying Unit for prepared	west end of				
		shell core sand, with 50 HP motor & 15,000 CFM cyclone collector	shell core bldg.				
	61	Mag-Coke process for making nodular iron	Cupola area, #1 foundry bldg.				

MWPS012006

UNITED STATES PIPE AND FOUNDRY COMPANY
SOIL PIPE DIVISION
P. O. BOX 6129 • CHATTANOOGA, TENNESSEE 37401

October 13, 1970

RECEIVED
OCT 15 1970

RBW - Luna - DCW

Mr. H. L. Parr, Chief Engineer
Chattanooga-Hamilton Air Pollution Control Bureau
Room 201, City Hall Annex
Chattanooga, Tennessee 37402

Dear Mr. Parr:

To comply with your two undated letters requesting a listing of all fuel burning equipment, all air pollution control equipment, and all equipment or processes that may be sources of air pollution located at the Soil Pipe Plant of United States Pipe and Foundry Company, Chattanooga, Tennessee, by October 14, 1970, we are enclosing five (5) pages of the Equipment Registration Form you provided listing all equipment which we believe falls into these three categories.

Please call if you require additional information.

Very truly yours,

Boyd Scanland
Manager of Manufacturing

BS:if
enclosure

bcc: Mr. J. H. King
Mr. D. L. Saltsman, Jr.
Mr. R. B. Wilson - Mr. Mac Luna - Mr. Don Wallace
Mr. C. A. Johnson

SPECIFY
SUPERSPUN®
CAST IRON SOIL PIPE & FITTINGS

Types of Contaminants			
A		E	
B		F	
C		G	
D		O	

EQUIPMENT REGISTRATION FORM FOR

CHATTANOOGA-HAMILTON COUNTY AIR POLLUTION CONTROL BUREAU

CSP

Activity Classification							
1		5		9		13	
2		6		10		14	
3		7		11		15	
4		8		12		16	

CONTROL SOURCE

Firm Name U. S. Pipe and Foundry Company Phone _____ Grid No. _____

Address _____
Street City County Zip

Legal Owner _____ Corp. _____ Part. _____ Indiv. _____

Nature of Business _____ Responsible Person _____ Title _____

List of All Equipment and Processes That May Be Sources of Air Pollution

	Item	Descriptive—General usage Name of Equipment—System or Process including Manufacturer's Name and Model No.	Approximate Location On Premises	Inspection Date	Permit Status	Reinspection Date	Comments
	17	New sand distribution conveyor	entire length of high east wall, foundry bldg.				
	18	Sand refuse bin	northeast corner foundry bldg.				
	19	Core sand storage gin	mez. floor " "				
	20	Hewitt-Robins, G-65, Hi-G Vibrating Screen	northeast area of foundry bldg.				
	21	5' pipe machine, return sand elevator and conveyor belt	main floor " "				
4	22	2 - Size #108 Schneible Type "SW" water curtain cupola collector	top of cupolas east side of foundry bldg.				water flow to cap - 375 gpm. Re-~~culating water system with drag~~ air separator. Serves Item 23.
	23	2 - Modern Equip. Co. 108" cupolas, 35-TPH melt rate	outside east side of foundry bldg.				only one in oper. at a time. Cupola ~~bottom is dropped once each week.~~
	24	Ajax 400-KW induction furnace, 6000 lb. metal capacity and 4000 lb. pour	Adjacent to cupola east side of fdy. mez. flr				
	25	1 - Beardsley & Piper Model 500 Speed Heater S/NRSH-138-6607 (resin melting)	N.E. corner foundry main fl				~~exhausted to fines seperator cyclone.~~
	26	Central sand pneumatic conveyor	" "				Conveyor system feeds to a sep. cycl

MWPS012008

PROCESS EQUIPMENT PERMIT APPLICATION

Name of Company: U. S. Pipe and Foundry Company, Soil Pipe Division

Company official to contact: Boyd Scanland

Mailing address: 1000 West 19 Street

Phone Number: 265-4611

IMPORTANT: For faster and more efficient processing of permit application give answers to all questions and requirements on attached instruction sheets in as much detail as possible where applicable.

BASIC PROCESS EQUIPMENT

Equipment Name: Foundry Cupola (108" dia. Modern cupola)

Type of Process: Foundry Melting

Raw Material(s) Processed: Pig iron, scrap, steel, coke and stone

Process Weight: 70,000 LB./HR.

Emission Type(s): Dirty Flue Gas

Emission Rate (Calculated or ~~Actual~~):

Uncontrolled: 700 LB./HR.

Controlled: 7 LB./HR.

Control Equipment on Process: Yes Proposed No

Type of Control: Baghouse

Note: If control equipment, fill out applicable information on back of page.

Other Pertinent Information:

Baghouse manufactured and designed by U. S. Pipe and Foundry Company

This is to certify that the above information is true and complete to the best of my knowledge.

Company Official: Boyd Scanland
Title: Manager of Manufacturing
Date: April 12, 1972

Return completed form to:
Chattanooga-Hamilton County Air Pollution Control Bureau
100 E. 11th Street
City Hall Annex, Room 201
Chattanooga, Tennessee 37402

APCB-4
5-71

MWPS012009

A. Required fee: $_____ . Submitted: Yes____. NO____.

B. Pressure drop: 3.65 In. H_2O.

C. Extra compartment for cleaning and maintenance:
Yes x . NO_____. If no contact owner.

D. Type of cloth in filter: Type E Fiberglass.

E. Temperature of entrance gas to baghouse: 500 °F.

F. Recommended temperature for cloth type: 550 °F.
(See Table 1: Properties of Filter Fabrics)

G. Cloth area: 49,312 operating ft.^{2} 15 | 52,834 ft.^{2} total

H. Gas volume: 72,100 normal ACFM ft.^{3}/min. 98,000 ft.^{3} burndown ACFM*

I. Calculations:

1) Filter velocity = $\frac{\text{Air velocity, ft.}^3\text{/min.}}{\text{cloth area ft.}^2}$

= $\frac{(72{,}100 \text{ ACFM})}{(49{,}312)}$ $\frac{98{,}000^*}{49{,}312}$

= 1.46 ft./min. 1.98*

2) Pressure drop = (K factor from Table 2) x (Filter velocity)

= (2.5) x (1.46) 2.5 x 1.98*

= 3.65 In. H_2O 4.75*

Recommended pressure drop: Minimum: 1.5 In. H_2O.

Maximum: 8 In. H_2O.

J. Manufacturers stated efficiency: 99+ %

K. Emissions after control equipment:

Emissions = (Emission rate before control, lb./hr.)x(100-% efficiency

= (700 lb/hour)x(100- 99

= (700)x(1

= 7 lb./hr.

L. Controlled emissions less than or equal to allowable emissions from ordinance: YES x . NO _____ .

M. Comments: * Occurs 15 min. once per week

MWPS012010

CONTROL EQUIPMENT

BAGHOUSE

Number of Compartments: 15.

Extra Compartment for Cleaning: Yes x. No ____

Filter Cloth Type: Type E Fiberglass. Cloth Area: 52,834 sq. ft.

Entrance Gas Temperature (Actual): 500 °F. 260 °C.

Gas Volume: 72,100 FT^3/Min. Pressure Drop: 3.65 in H_2O.

Manufacturers Stated Efficiency: 99+ %.

ELECTROSTATIC PRECIPATATOR

Entrance Gas Temperature (Actual): ____ °F. ____ °C.

Gas Flow Rate, Q: ____ FT^3/S.

Collecting Surface Area, A: ____ FT^2.

Particle Size Distribution: ____ Microns.

Manufacturers Stated Efficiency: ____ %.

OTHER

Type of Equipment: ____

Entrance Gas Temperature: ____ °F. ____ °C.

Gas Volume: ____ FT^3/Min. Pressure Drop ____ in. H_2O.

Manufacturers Stated Efficiency: ____ %.

Other Pertinent Information:

Chattanooga-Hamilton County Air Pollution Control Bureau

February 11, 2005

Danny Jennings
Facility Environmental Coordinator
United States Pipe and Foundry Company
2701 Chestnut Street
Chattanooga, TN 37408

Dear ~~Mr. Jennings:~~ Danny

The EPA review of your Part 70 Significant Modification is completed. Please remove pages 2, 19, 51, 52, 55, and 56 from your existing permit and replace them with the new pages that incorporate the modification.

If you have any questions please call Cynthia McDaniel at 643-5982 or e mail at mcdaniel_c@mail.chattanooga.gov.

Very truly yours

Robert H. Colby
Director

Enclosure

6125 Preservation Drive • Chattanooga, TN 37416-3638 • 423-643-5970 • Fax 423-643-5972
www.apcb.org

MWPS012012

Chattanooga-Hamilton County Air Pollution Control Bureau

February 2, 2005

Danny Jennings
Facility Environmental Coordinator
United States Pipe and Foundry Company
2701 Chestnut Street
Chattanooga, TN 37408

Dear Mr. Jennings:

The EPA review of your Part 70 Significant Modification is completed. Please remove pages 5, 15, and 47 from your existing permit and replace them with the enclosed new pages that incorporate the modification.

If you have any questions please call Cynthia McDaniel at (423) 643-5982 or e-mail at mcdaniel_c@mail.chattanooga.gov.

Very truly yours

Robert H. Colby
Director

Enclosure

6125 Preservation Drive • Chattanooga, TN 37416-3638 • 423-643-5970 • Fax 423-643-5972
www.apcb.org

MWPS012013

Chattanooga-Hamilton County Air Pollution Control Bureau

April 7, 2004

Mr. Danny Jennings
U.S. Pipe-Valve Plant
2701 Chestnut Street
Chattanooga, TN 37408

Dear Mr. Jennings:

Your renewal Part 70 permit is enclosed. Your existing Part 70 Permit is valid through April 8 of 2004. The Permit renewal is in effect from April 9, 2004.

If you have any questions please call Cynthia McDaniel at 668-2566 or e-mail at mcdaniel_c@mail.chattanooga.gov.

Very truly yours,

Robert H. Colby
Director

Enclosure

1250 Market Street, Suite 3020 • Chattanooga, TN 37402-2713 • 423-668-2567 • Fax 423-668-2556
www.apcb.org

MWPS012014

TABLE OF CONTENTS

Subject **Page**

Emission Unit Summary 2

Conditions of General Applicability to
All Part 70 Sources 4

Conditions Applicable to the Entire Facility 16

Emission Unit Special Conditions 22

Permit Shield 58

The emissions units regulated by this permit are the following:

Emission Unit	Description
101	Charge Handling
102	Melting Facility
103	Hot Metal Transfer
104	Desulfurization & Slagging
105	Induction Holding Furnaces
106	Ductile Treating Process
107	No. 9 Unit Inoculation & Slagging
108	No. 10 Unit Inoculation & Slagging
109	Fitting Plant Pouring & Cooling
110	No.9 Unit Shakeout
111	No.10 Unit Shakeout
112	No. 9 Unit Casting Cleaning
113	No.10 Unit Casting Cleaning

Emission Unit	Description
114	Grinding, Finishing, & Priming Operation
115	Cement Lining Building
116	Special Coating Operation
118	No. 10 Unit Airset Mold System
119	No. 10 Unit Sand Reclamation
120	No.9 Unit Greensand Mold System
121	Shell Cores Process
122	Airset Core System
123	Isocure Core System
124	Pepset Core System
125	Refractory Coating Operation
126	Packaging & Shipping Operation
127	Ancillary Fitting Plant Operations
128	Fusion Bonded Epoxy Process
206	Valve & Hydrant Production
207	Resilient Seat Valve Production
208	Ancillary Valve & Hydrant Plant Operations
301	Solid Waste Landfill

CONDITIONS OF GENERAL APPLICABILITY

This permittee, United States Pipe and Foundry Company, Inc., is subject to each of the conditions expressed below and is required to comply with them throughout the term of this Part 70 permit. By accepting this permit and operating under it, United States Pipe and Foundry Company, Inc. agrees to comply with all terms, provisions, limitations, and requirements herein.

ALL SECTIONS OF THE CHATTANOOGA AIR POLLUTION CONTROL ORDINANCE CITED IN THIS PERMIT ARE INCORPORATED HEREIN BY REFERENCE. Section numbers referred to in this permit which are not otherwise identified refer to sections in the Chattanooga Air Pollution Control Ordinance.

1.0 Definitions. Unless specifically defined within a provision of the Chattanooga Air Pollution Control Ordinance referenced elsewhere in this permit, the definitions in §4-2 and §4-53 shall apply. *§4-2; §4-53*

2.0 Severability. If any provision, part of a provision, sentence, clause, or phrase in this permit is for any reason declared to be unconstitutional or otherwise invalid by any court of competent jurisdiction, such decision shall not affect the validity of any other portion of this permit, and only such invalid portion shall be elided. *§4-57(a)(5)*

3.0 Compliance.

3.1 The permittee must comply with all conditions of this Part 70 permit. Noncompliance with any permit provision constitutes a violation of either the Chattanooga City Code, Part II, Chapter 4, known as "The Chattanooga Air Pollution Control Ordinance"; the Tennessee Air Quality Act, T.C.A. 68-201-101 *et seq.*; and/or the federal Clean Air Act, as amended, Title 42 United States Code (U.S.C.) §7401 *et seq.* and is grounds for joint and several enforcement action; for permit termination, revocation, or modification; or for denial of a permit renewal application. Enforcement by the Chattanooga-Hamilton County Air Pollution Control Board (the Board) or the Director of the Chattanooga-Hamilton County Air Pollution Control Bureau (the Bureau) shall be conducted in accordance with the provisions of §4-4, §4-7, §4-14, §4-15, §4-17, §4-18, §4-20, §4-61, §4-62, §4-63, §4-64, and §4-65, as appropriate to the circumstances. *§4-57(a)(6)(i)*

3.2 It shall not be a defense for a permittee in an enforcement action that it would have been necessary to halt or reduce the permitted activity in order to maintain compliance with the conditions of this permit. *§4-57(a)(6)(ii)*

3.3 This permit may be modified, revoked, reopened and reissued, or terminated for cause. The filing of a request by the permittee for a permit modification, revocation and reissuance, or termination; or the filing of a notification of planned changes or anticipated noncompliance does not stay any condition in this permit. *§4-57(a)(6)(iii)*

3.4 Annual compliance certifications shall be submitted by May 8 of each year throughout the term of this permit. Separate compliance certifications shall be submitted to:

Chattanooga-Hamilton County Air Pollution Control Bureau
Development Resource Center
6125 Preservation Drive
Chattanooga, TN 37406-3638

and to:

U.S. EPA Region 4
Air Enforcement Section
Sam Nunn Atlanta Federal Center
61 Forsyth Street SW
Atlanta, GA 30303-8960

Each such compliance certification shall include the following information (provided that the identification of applicable information may cross-reference the permit or previous reports as applicable):

3.4.1 Identification of each term or condition of the permit that is the basis of the certification;

3.4.2 Compliance status;

3.4.3 Whether compliance was continuous or intermittent;

3.4.4 The method(s) used for determining the compliance status of the source, currently and over the reporting period consistent with §4-57(a)(3);

3.4.5 Where any specific test method requires quality assurance audit samples and the audit result does not validate the source's sample within the specified parameters, the source must retest the stack test until such time as the audit result does validate the sample within the specified parameters; except that the Bureau Director may waive retesting if the source's stack test sample is in compliance with this permit even if not validated within the specified quality assurance parameters; *§4-3(d)*

3.4.6 Such other facts as the Board or the Bureau Director may require to determine the compliance status of the Part 70 source; and *§4-57(c)(5)(iii)(E)*

3.4.7 Such additional requirements as may be required for enhanced monitoring compliance certification under Title 42 U.S.C. §7414(a)(3) and §7661c(b)

of the Clean Air Act. *§4-3(d); §4-57(c)(5)*

The annual compliance period that is covered by each compliance certification shall be the previous calendar year from January 1 through December 31.

3.5 The methods set forth in §4-3 shall be applicable for determining compliance with all terms, provisions, limitations, and requirements contained in this permit, except where otherwise specifically provided in this permit.

4.0 Property Rights. This permit does not convey any property rights of any sort or any exclusive privilege. This permit is not assignable except as provided in §4-58(d)(1)(iv). *§4-57(a)(6)(iv)*

5.0 Information to be Furnished. The permittee shall furnish to the Bureau Director, within a reasonable period of time, any information that the Board or the Bureau Director may request in writing to determine whether cause exists for modifying, revoking, or terminating the permit or to determine compliance with the permit. Upon request, the permittee shall also furnish to the Board or the Bureau Director copies of records required to be kept by the permit. For information claimed to be confidential, the permittee may furnish such records directly to the Administrator of the U.S. Environmental Protection Agency (EPA) along with a claim of confidentiality. Eligibility for confidential treatment shall be determined by the Board pursuant to the provisions of §4-19 for information submitted directly to the Bureau Director. An independent determination regarding confidentiality would be made by the Administrator of the U.S. EPA for information submitted directly to the Administrator. *§4-57(a)(6)(v)*

6.0 Fees. The permittee shall pay fees to the Bureau Director consistent with the fee provisions set forth in §4-60. *§4-57(a)(7)*

7.0 Changes Provided for by Permit. No permit revision shall be required under any economic incentives, marketable permits, emissions trading, or similar program or process which is included in the Chattanooga City Code, Part II, Chapter 4, Article III for changes that are provided for in this permit pursuant to such program or process. *§4-57(a)(8)*

8.0 Reasonably Anticipated Operating Scenarios. Contemporaneously with making a change from one operating scenario to another, the permittee must record in a log at the Part 70 source premises a record of the scenarios under which it is operating. *§4-57(a)(9)*

9.0 Acid Precipitation Requirements. Where an applicable requirement of the Clean Air Act is more stringent than an applicable requirement of regulations promulgated under Title IV of the Clean Air Act and incorporated by reference at §4-52(d), both provisions are herein incorporated into this permit by reference and shall be legally enforceable. This source does not lawfully hold any allowance under Title IV of the Clean Air Act. *§4-57(a)(1)(ii)*

10.0 Federal Enforceability. All terms and conditions in this Part 70 permit, including any

provisions designed to limit the potential to emit of this Part 70 source, are enforceable by the Administrator of the U.S. EPA and by citizens under the Clean Air Act except for the following, which are locally enforceable only:

10.1 §4-41, Rule 12 (Regulation of Odors in the Ambient Air) and

10.2 §4-41, Rule 14 (Nuisances).

Any terms and conditions included in the permit that are not required under the Clean Air Act or under any of its applicable requirements are specifically designated in this permit as not being federally enforceable under the Clean Air Act. *§4-57(b)(1) and (2)*

11.0 Inspection of Permitted Source(s). Upon presentation of identification and in the performance of their duties, the permittee shall allow the Bureau Director and other Bureau employees to perform the following:

11.1 Enter upon the permittee's premises or buildings where a Part 70 source is located or emissions-related activity is conducted, or where records must be kept under the conditions of the permit;

11.2 Have access to and copy, at reasonable times, any records that must be kept under the conditions of the permit;

11.3 Inspect at reasonable times any facilities, equipment (including monitoring and air pollution control equipment), practices, or operations regulated or required under the permit; and

11.4 Sample or monitor substances or parameters, and collect and preserve evidence for the purpose of assuring compliance with the permit or applicable requirements thereunder at reasonable times and for taking such other actions as are appropriate under the law in accordance with Item 3.1 of these Conditions of General Applicability.

11.5 For the purposes of Items 11.2, 11.3, and 11.4 of these Conditions of General Applicability, "reasonable times" shall be considered to be customary business hours, unless reasonable cause exists to suspect noncompliance with the Chattanooga Air Pollution Control Ordinance or any "applicable requirement," as defined in §4-53, or with any permit issued thereunder, and the Bureau Director specifically authorizes a designee to inspect a facility at any other time.

11.6 In the alternative, the Bureau Director, other Bureau employees, or any other law enforcement officer may obtain a search warrant to obtain, collect, and preserve evidence.

§4-16; §4-57(c)(2)

12.0 Recordkeeping and Reporting.

12.1 Record Retention Requirements. All required monitoring data and related support information shall be retained by the permittee for five (5) years after the date of the monitoring sample, measurement, report, or application. Support information includes all calibration and maintenance records, all original strip-chart recordings for continuous monitoring instrumentation, copies of all reports, and logs required by the permit. *§4-57(a)(3)(ii)(B)*

12.2 Reporting of Deviations. The permittee shall promptly report all emission limitation exceedances and all other deviations from permit requirements (including those attributable to malfunctions), the probable cause of such exceedance or deviation, and any corrective actions or preventive measures taken. "Promptly report" shall mean an initial telephone report to the Bureau Director within twenty-four (24) hours after the onset of the exceedance or other deviation, followed up by a written report submitted to the Bureau Director within seven (7) days after the onset of the exceedance or other deviation. Any excess emissions or other deviation that creates an imminent hazard requiring immediate action to protect health or safety must be reported by telephone immediately to the Bureau Director, to the Hamilton County Local Emergency Planning Committee, to the Tennessee Emergency Management Agency, and to the National Response Center. *§4-12; §4-57(a)(3)(iii)(B)*

13.0 Emergency Provision.

13.1 Definition. An emergency is any situation arising from sudden and reasonably unforeseeable events beyond the control of the permittee, including acts of God, which situation requires immediate corrective action to restore normal operation, and that causes the permittee to exceed a technology-based emission limitation under the permit, due to unavoidable increases in emissions attributable to the emergency. An emergency shall not include noncompliance to the extent caused by improperly designed equipment, lack of preventative maintenance, careless or improper operation, or operator error. *§4-57(g)*

13.2 An emergency constitutes an affirmative defense to an action brought for noncompliance with such technology-based emission limitations if the conditions of Item 13 of these Conditions of General Applicability are met, unless an ambient air violation occurs as a result of the emergency. The affirmative defense of emergency shall be demonstrated through properly signed, contemporaneous operating logs, or other relevant evidence which establishes that:

13.2.1 An emergency occurred and that the permittee can identify the cause(s) of the emergency;

13.2.2 The permitted facility was at the time being properly operated;

13.2.3 During the period of the emergency the permittee took all reasonable steps to minimize levels of emissions that exceeded the emission standards, or other requirements in the permit; and

13.2.4 The permittee submitted a telephone notice of the emergency to the Bureau Director within one (1) working day of the time when emission limitations were exceeded due to the emergency, and the permittee submitted a follow up written report to the Bureau within seven (7) days after the onset of the exceedance. This notice must contain a description of the emergency, any steps taken to mitigate emissions, and corrective actions taken.

§4-57(g)

13.3 In any enforcement proceeding, the permittee seeking to establish the occurrence of an emergency has the burden of proof. *§4-12; §4-57(g)*

13.4 The permittee must employ all reasonable measures to keep emissions to a minimum during start-ups, shutdowns, operation, and emergencies. These measures may include installation and use of alternate control systems, changes in operating methods or procedures, cessation of operation until the process equipment or air pollution control equipment is repaired, maintaining sufficient spare parts, use of overtime labor, use of outside consultants and contractors, and other appropriate means. Exceedances of limitations on emissions that are caused by poor maintenance, careless operation, or any other preventable upset condition or preventable equipment breakdown shall not be considered emergencies, and shall be considered in violation of the emission standard exceeded. *§4-12*

13.5 A log of any operation or failure to operate, start-up, or shutdown resulting in air pollutant emissions in excess of any applicable requirement must be kept at the Part 70 source. This log must record at least the following:

13.5.1 Stack, air pollution control equipment, or emission point involved;

13.5.2 Time excess emissions, start-up, or shutdown began or when excess emissions were first discovered by the source;

13.5.3 Type of exceedance qualifying as a malfunction, or reason for shutdown;

13.5.4 Time start-up or shutdown was complete or time the air pollutant source returned to normal operation after an emissions exceedance;

13.5.5 Documentation that the source was or was not, at the time of the onset of the exceedance, being properly operated;

13.5.6 Documentation of any preventative maintenance of the air pollution control equipment or process equipment or processes that had been completed prior to the emissions exceedance, start-up, or shutdown;

13.5.7 The steps taken by the source during the period of the emissions exceedance, start-up, or shutdown to minimize levels of emissions that exceeded the applicable requirements; and

13.5.8 The magnitude and identity of the excess emissions, expressed in pounds per hour and the units of the applicable emission limitation, and the operating data and calculations used in determining the magnitude of the excess emissions.

§4-12

13.6 The information required by Items 13.5.1 and 13.5.2 of these Conditions of General Applicability must be entered into the log by the end of the shift during which the exceedance or other deviation began. All required information shall be entered in the log no later than twenty-four (24) hours after the exceedance or other deviation has ceased or has been corrected. Any later discovered corrections may be added in the log as footnotes with the reason given for the change. There shall be no erasures, obliterations, modifications, or revisions of the log entry except by single line-through and identification of corrections. *§4-12*

13.7 If the Bureau Director or the Administrator of the Chattanooga-Hamilton County Health Department finds that a condition of air pollution exists or is likely to exist, and that it creates any emergency requiring immediate action to protect human health or safety, the mayor with the concurrence of the Bureau Director or the Administrator of the Chattanooga-Hamilton County Health Department shall order persons causing or contributing to the air pollution to reduce or discontinue immediately the emission of air pollutants. Upon issuance of any such order, the Bureau Director shall fix a place and time, not later than twenty-four (24) hours thereafter, for a hearing to be held before the Board. Not more than twenty-four (24) hours after commencement of such hearing, and without adjournment thereafter, the Board shall affirm, modify, or recommend to the mayor that the order be affirmed, modified, or set aside. *§4-20*

14.0 Certification. Any application form, report, or compliance certification submitted pursuant to this permit shall contain a certification, as defined in §4-53, by a responsible official, as defined in §4-53, of truth, accuracy, and completeness. Any certification required by this permit shall state that based on information and belief formed after reasonable inquiry, the statements and information in the document are true, accurate, and complete. *§4-56(d)*

15.0 Modifications.

15.1 Administrative amendments to this permit shall be requested and may be granted in

accordance with §4-58(d), and only for the reasons set forth therein. The permittee is required to submit an application for an administrative amendment within sixty (60) days after a change of the name of the permittee is registered with the Tennessee Secretary of State.

15.2 Minor permit modifications to this permit shall be requested and may be granted in accordance with §4-58(e)(1) and (2).

15.3 Significant permit modifications to this permit shall be requested and may be granted in accordance with §4-58(e)(3).

15.4 Operational flexibility allows changes within this permitted source without requiring a permit revision, if the changes are not modifications under Title I of the Clean Air Act and the changes do not exceed the emissions allowable under this permit (whether expressed herein as a rate of emissions or in terms of total emissions), provided that:

15.4.1 The permittee provides the U.S. EPA and the Bureau Director with written notification at least seven (7) days in advance of the proposed changes; and

15.4.2 For each such change, said written notification shall include a brief description of the change within the permitted source, the date on which the change will occur, any change in emissions, and any permit term or condition that is no longer applicable as a result of the change.

The permit shield described in §4-57(f) shall not apply to any change made pursuant to operational flexibility. *§4-58(i)*

15.5 Installation permit application and issuance requirements in §4-8(a) will apply to this permittee and emission units located at this Part 70 source if modifications to or new construction of a Part 70 source are subject to the following:

15.5.1 §4-41, Rule 18 (Prevention of Significant Air Quality Deterioration);

15.5.2 §4-41, Rule 25.3 (General Provisions and Applicability for Volatile Organic Compounds – Standards for New Sources);

15.5.3 §4-41, Rule 23 (General Provisions and Applicability for Process Gaseous Emissions Standards);

15.5.4 Any standard or other requirement pursuant to regulations promulgated under Title 42 U.S.C. §7411 in Title 40 *Code of Federal Regulations* Part 60;

15.5.5 Case-by-case determinations made pursuant to Title 42 U.S.C. §7412(g) and

(j) as set forth at §4-53 "Applicable requirements (4)"; or

15.5.6 Case-by-case determinations made pursuant to §4-41, Rule 27 (Particulate Matter Controls for New Sources and New Modifications After August 29, 1995).

§4-50

16.0 Off-Permit Changes.

16.1 An off-permit change is one that:

16.1.1 Is not addressed or prohibited by the permit;

16.1.2 Is not a modification under Title I of the Clean Air Act;

16.1.3 Is not subject to any requirements under Title IV of the Clean Air Act;

16.1.4 Meets all applicable requirements, as described in this permit; and

16.1.5 Does not violate, or cause or contribute to a violation of, any existing permit term or condition.

16.2 A contemporaneous notification shall be submitted to the Bureau Director and to the U.S. EPA except for changes that qualify as insignificant under §4-56(c)(11) and (c)(12).

16.3 The permittee shall keep a record describing off-permit changes made at the Part 70 source that result in emissions of a regulated air pollutant subject to an applicable requirement, but not otherwise regulated under the permit, and the emissions resulting from those off-permit changes.

16.4 The permit shield described in §4-57(f) shall not apply to any change made pursuant to off-permit changes.

§4-58(j)

17.0 Permit Reopening. This permit shall be reopened and revised under any of the following circumstances, as set forth at §4-58(f)(1):

17.1 Additional applicable requirements become applicable by amendment of the Chattanooga Air Pollution Control Ordinance to this source and the remaining permit term is three (3) or more years. Such reopening shall be completed not later than eighteen (18) months after promulgation of the applicable requirement. No such reopening is required if the effective date of the requirement is later than the date on which the permit is due to expire;

17.2 Additional requirements (including excess emissions requirements) become applicable to an affected source as defined in §4-53. Upon approval by the Administrator of the U.S. EPA and amendment of the Chattanooga Air Pollution Control Ordinance, excess emissions offset plans shall be incorporated into the permit;

17.3 The Board, the Bureau Director, or the Administrator of the U.S. EPA determines that this permit contains a material mistake or that inaccurate statements were made in establishing the emissions standards or other terms or conditions of the permit; or

17.4 The Board, the Bureau Director, or the Administrator of the U.S. EPA determines that this permit must be revised or revoked to assure compliance with the applicable requirements.

Proceedings to reopen and issue a revised permit shall follow the same procedures as apply to initial permit issuance, described in §4-58, and shall affect only those parts of the permit for which cause to reopen exists. Such reopening shall be made as expeditiously as practicable, but only after notice of such intent is provided to this permittee by the Bureau Director at least thirty (30) days in advance of the date that permit is to be reopened. A shorter time period may be provided in the case of an emergency. *§4-58(f)*

This permit is also subject to reopening for cause by the U.S. EPA, as described in §4-58(g). *§4-58(g)*

18.0 Rules Applicable to All Permittee Activities. The following conditions apply to all activities of this permittee, including insignificant activities:

18.1 Nitrogen Oxides. The permittee shall comply with §4-41, Rules 2.4, 2.5, and 2.7, regarding emissions of nitrogen oxides.

18.2 Visible Emissions. The permittee shall comply with §4-41, Rule 3, which stipulates that the opacity of visible emissions shall not exceed twenty (20) percent for an aggregate of more than five (5) minutes in any one-hour period or more than twenty (20) minutes in any twenty-four-hour period. The permittee shall also comply with §4-41, Rule 9, regarding visible emissions from internal combustion engines. In addition, the permittee shall comply with §4-41, Rule 11, which stipulates that the opacity of visible emissions from the handling, processing, or storage of any material in the open air shall not exceed twenty (20) percent for more than three (3) minutes in any consecutive sixty-minute period or more than twenty (20) minutes in any twenty-four-hour period. *§4-3(c)(9)*

18.3 Certain Fuels. The permittee shall comply with §4-41, Rule 4, regarding importation, sale, transportation, use, or consumption of fuels containing in excess of four (4) percent sulfur by weight.

18.4 Prohibition of Hand-Fired Fuel-Burning Equipment. The permittee shall comply with §4-41, Rule 5, regarding the prohibition of the use of hand-fired fuel-burning equipment with solid fuels.

18.5 Open Burning. The permittee is prohibited from conducting open burning except in accordance with §4-41, Rule 6.

18.6 Fuel-Burning Equipment. The permittee shall comply with §4-41, Rule 8, regarding particulate matter emissions from fuel-burning equipment.

18.7 Process Emissions. The permittee shall comply with §4-41, Rule 10, regarding process particulate matter emissions.

18.8 Odors in Ambient Air. The permittee shall comply with §4-41, Rule 12, regarding emissions of objectionable odors. (local rule only)

18.9 Sulfur Oxides. The permittee shall comply with §4-41, Rule 13, regarding emissions of sulfur oxides.

18.10 Nuisances. The permittee shall comply with §4-41, Rule 14, regarding discharges from any source of air contaminants or other material which shall cause a nuisance. (local rule only)

18.11 Hazardous Air Pollutants. The permittee shall comply with §4-41, Rules 16.1 through 16.4, regarding emission standards for hazardous air pollutants other than asbestos.

18.12 Asbestos – Demolition or Renovation. The permittee shall comply with §4-41, Rules 17.5, 17.10, 17.12, and 17.13, when conducting any demolition or renovation activities at the permitted source.

18.13 Stack Heights. The permittee shall comply with §4-41, Rule 22, regarding good engineering practice stack heights.

18.14 Particulate Matter Controls for New Sources and New Modifications. The permittee shall comply with §4-41, Rule 27, regarding particulate matter controls for any new source or modification for which installation commences after August 29, 1995.

19.0 Stratospheric Ozone and Climate Protection. The permittee is subject to the standards for recycling and emissions reduction promulgated at Title 40 *Code of Federal Regulations* Part 82, Subpart F, including the use of certified technicians only.

20.0 Dismantled Equipment. The permittee shall report the permanent discontinuance or dismantlement of any equipment or activity covered by this permit to the Bureau Director

within thirty (30) days. *§4-11(a)*

21.0 Monitoring. All monitoring and related reporting shall be conducted in compliance with §4-57(a)(3)(ii)(A) and (B).

22.0 Applicable Requirements. In addition to the Conditions of General Applicability, Conditions Applicable to the Entire Facility, and Emission Unit Special Conditions in this permit, "applicable requirements" as defined in §4-53 shall apply.

23.0 Basis of Permit. This permit is being issued based on the statements made and the information provided in the Part 70 permit application submitted under oath by this source.

CONDITIONS APPLICABLE TO THE ENTIRE FACILITY

1.0 Semiannual Compliance Monitoring Reports. In addition to reports that are required by the Conditions of General Applicability, a semiannual compliance monitoring report shall be submitted by May 8 and November 8 of each year throughout the term of this permit. The compliance monitoring reports shall be submitted to:

Chattanooga-Hamilton County Air Pollution Control Bureau
6125 Preservation Drive
Chattanooga, TN 37406-3638

1.1 Each compliance monitoring report shall include a detailed summary report of deviations from permit requirements for the previous six-month period indicating every instance in which an emission unit was operated outside of required parameters or was operated while air pollution control equipment that was required to be used was not in operation, bypassed, or operated outside of required parameters. For each such incident, the nature and cause of the incident, affected equipment, calendar date, beginning time, elapsed time, value of any operating parameter that was not met, and estimated resulting emissions shall be included in the report.

1.2 In addition, each compliance semiannual compliance monitoring report shall include the following information for the previous twelve months:

1.2.1 Total quantity and VOC content of each VOC-containing coating
1.2.2 Total usage and VOC content of each sand core and/or mold resin component
1.2.3 Total quantity and sulfur content of coke used at the melting facility
1.2.4 Total operating hours of the No.9 Unit Sand Screening Drum (E023)
1.2.5 Total quantity of triethylamine
1.2.6 Total quantity and VOC content of each VOC-containing refractory coating
1.2.7 Total quantity of iron poured at the facility
1.2.8 Total quantity of iron poured on No. 10 Unit

§4-57(a)(3)(iii)(B)

2.0 Maintenance Plan.

2.1 United States Pipe and Foundry Company, Inc. shall implement and maintain a preventative maintenance plan for all major air pollution control equipment. At a minimum, the plan shall include the manufacturer's recommendations and recordkeeping of periodic and/or scheduled maintenance activities for the purposes of complying with the plan. The plan shall be updated as necessary, maintained on site, and be available for inspection by Bureau representative upon request during normal business hours. *§4-57*

2.2 For the purpose of this Condition 2.0, major air pollution control equipment shall be defined as all air pollution equipment for which monitoring or inspection is required in this Part 70 permit.

3.0 Insignificant Activities. The following insignificant activities were certified in the United States Pipe and Foundry Company Part 70 permit application to be in compliance with §4-56(c)(12).

3.1 Surface coating and degreasing operations which do not exceed a combined total usage of more than 60 gallons/month of coatings, thinners, clean-up solvents, and degreasing solvents, at any one location.
3.2 All storage tanks with a capacity of no more than 1,000 gallons (including 55-gallon drums used only for storage) except those emitting any hazardous air pollutant.
3.3 Powder coating operations.
3.4 Emergency generators.
3.5 Non-continuous solvent recycling units with less than sixty gallons capacity.
3.6 Lubricants and waxes used for machinery lubrication.

4.0 Record Keeping Activities. Records demonstrating compliance with this permit shall be maintained for a period of five years. The records shall include, but are not limited to, the following:

4.1 All information required under Condition 13.5 in the Conditions of General Applicability
4.2 All reports required under Condition 1.0, Conditions Applicable to the Entire Facility including supporting documentation and calculations
4.3 All performance evaluations, corrective actions taken, and other documentation required by Condition 7.0 and Condition 8.0, Conditions Applicable to the Entire Facility
4.4 Cupola afterburner (CD001) temperature log required by Condition 7.0, Emission Unit 102
4.5 Primer Dip Coating operations log required by Condition 3.0, Emission Unit 114
4.6 Cement Lining Building operations log required by Condition 4.0, Emission Unit 115
4.7 Special Coating operations log required by Condition 4.0, Emission Unit 116
4.8 No. 10 Unit iron poured log required by Condition 3.0, Emission Unit 118 and Condition 2.0, Emission Unit 119
4.9 Total operating hours of the No.9 Unit Sand Screening Drum (E023), Emission Unit 120
4.10 Acid scrubber pH readings required under Condition 2.4, Emission Unit 123
4.11 Packing and Shipping operations log required under Condition 3.0, Emission Unit 126
4.12 Valve and Hydrant Production Coating operations log required under Condition 2.0, Emission Unit 206
4.13 Ancillary Valve and Hydrant Plant Special Coatings operations log required under

Condition 4.0, Emission Unit 208

5.0 Sulfur Concentration in Coke. The maximum allowable sulfur content of the coke used at this facility shall not exceed 0.7 percent. *Part 70 Permit Application Request by Permittee*

6.0 Visible Emissions from Buildings. Visible emissions from buildings, other than those from stacks or flues, shall not exceed an opacity of five percent for an aggregate of more than five minutes in any one hour or more than twenty minutes in any twenty-four-hour period. *§4-41, Rule 26.20; §4-57*

7.0 Compliance Assurance Monitoring. The following emissions sources are Pollutant Specific Emissions Units (PSEU) with potential "pre-control" particulate matter emissions greater than one hundred tons per year and are subject to the provisions of Title 40 *Code of Federal Regulations,* Part 64, "Compliance Assurance Monitoring." Compliance with the provision s shall be demonstrated through compliance with Conditions 1.1, 9.0, and 10.0, Conditions Applicable to Entire Facility. *§4-57(a)(3)(i)(A)*

Emission Unit	Source ID	Description	Control Device ID	Stack ID
102	E002	Cupola	CD002	S002
110	E014	No. 9 Unit Shakeout	CD003	S007
112	E019	No. 9 Unit Secondary Shakeout	CD006	S022
112	E021	No. 9 Unit Casting Monorail and 8 ft. Tableblast	CD008	S024
112	E133	No. 9 Unit Casting Automatic Cleaner	CD007	S023
113	E017	12 ft. Rotoblast Table	CD005	S018
128	E134-E136	FBE Rotoblast Barrels	CD048	S091

8.0 Iron and Steel Foundries MACT. United States Pipe and Foundry Company shall be subject to applicable requirements of the "National Emissions Standards for Hazardous Air Pollutants for Iron and Steel Foundries," Title 40 *Code of Federal Regulations*, Part 63, Subpart EEEEE.

9.0 Visible Emissions Monitoring.

Daily qualitative visible emissions observations shall be conducted of the following designated emission points while the source is in operation. In the event that visible emissions are observed at or above the designated action level for the individual emission point, a formal visible emission reading shall be conducted in accordance with U.S. EPA Test Method 9, Title 40 *Code of Federal Regulations* Part 60, Appendix A, as supplanted by the provisions of Section 4-3(c)(9) of the Chattanooga Air Pollution Control Ordinance. If the opacity of the observed visible emission is determined to be above the designated action level, corrective action shall be initiated.

9.1 Each formal visible emissions reading shall be conducted for a minimum of fifteen consecutive minutes by a certified observer.

9.2 U.S. Pipe shall maintain a log of all qualitative and formal visible emissions observations in accordance with the following:

9.2.1 The qualitative visible emissions observation log shall contain, at a minimum, the date of the observation, the results of the observation, and the initials of the observer.

9.2.2 The formal visible emissions reading log shall contain, at a minimum, the date and time the reading was made, the results of the reading, the name of the observer, and the cause and corrective action taken for the observed emissions.

9.2.3 U.S. Pipe shall maintain the logs and original visible emissions observations forms for a period of five years after the date of entry.

9.3 Visible emissions monitoring shall be conducted on the following emission points:

Stack ID	Description	Action Level	Limit
S001	Charge Handling	10%	20%
S002	Cupola Baghouse	10%	20%
S003	Cupola	10%	20%
S004	Melting Facility Building	5%	5%
S005/S006	Ductile Building Roof Vents and Ventilators	5%	5%
S007	Ductile Treating & No.9 Unit Shakeout Baghouse	10%	20%
S008-S015	Main Foundry Building Roof Monitors over Units Nos.9, 4, & 10 Pouring, Cooling, & Shakeout	5%	5%
S018	12 ft. Rotoblast Table Baghouse	10%	20%
S019/S060	Cleaning Shed No.2 Roof Eaves	5%	5%
S022	No.9 Unit Secondary Shakeout Baghouse	10%	20%
S023	No. 9 Unit Casting Automatic Cleaner Baghouse	5%	10%
S024	No. 9 Unit Casting Monorail and 8 ft. Tableblast Baghouse	10%	20%
S037	Sand Reclaimer Fines Baghouse	10%	10%
S038	Sand Reclaimer Classifer Baghouse	10%	10%
S053	Shell Core Building Ventilator	5%	5%
S058	GLA Burn-off Oven	5%	10%
S059	Cleaning Shed No.1 Ventilators	5%	5%
S062	Old Heat Treat Building Wall Fan	5%	5%
S078	Pattern Shop Cyclone	10%	20%
S090	No. 9 Casting Cooling Conveyor Baghouse	10%	10%
S091	FBE Rotoblast Barrels Baghouse	5%	10%
S092	No. 10 Unit Shakeout Sand Conveyor Baghouse	10%	20%
S093	No. 10 Unit Shakeout Baghouse	10%	20%
S094	PCP Burn-off Oven No. 2	5%	5%
SV27	PCP Burn-off Oven No. 3	5%	5%

10.0 Differential Pressure Across Baghouses. Daily monitoring of the differential pressure across the designated baghouses shall be conducted while the equipment is in operation. If the differential pressure is observed outside the specified range, an investigation of the cause

shall be conducted in accordance with U.S. Pipe and Foundry's written air pollution control equipment maintenance procedures. Once the cause has been determined, corrective action shall be initiated and completed in a timely manner.

United States Pipe and Foundry Company, Inc. shall maintain a log of all differential pressure readings taken for each device. This log shall contain, at a minimum, the date of the observation, the observed reading, the initials of the observer, and if the baghouse is operating outside the indicated range, the corrective action taken. U.S. Pipe shall maintain the logs for a period of five years after the date of entry.

CONTROL DEVICE	DESCRIPTION	RANGE (IN. OF WATER)
CD002	Cupola Baghouse	2-12
CD003	Ductile Treating & No. 9 Unit Shakeout Baghouse	1-9
CD005	Large Casting Rotoblast Baghouse	1-9
CD006	No.9 Unit Secondary Shakeout Baghouse	1-8
CD007	No. 9 Casting Automatic Cleaner Baghouse	1-9
CD008	Monorail & 8' Tableblast Baghouse	1-9
CD016	No. 10 Unit Sand Reclaimer Fines Baghouse	1-9
CD017	No. 10 Unit Sand Reclaimer Classifier Baghouse	1-9
CD047	No.9 Casting Cooling Conveyor Baghouse	1-9
CD048	FBE Rotoblast Barrels Baghouse	1-9
CD050	No. 10 Unit Shakeout Sand Conveyor Baghouse	1-8
CD051	No. 10 Unit Shakeout Baghouse	1-9
CDV08	Rotoblast Baghouse	1-9
CDV10	Airblast Baghouse	1-8

11.0 Emissions Determination. All estimated emissions for this Part 70 Permit shall be the product of the emission factor for a given process and the applicable control efficiencies (including equivalent control efficiencies for wetted sand processes and settling factors). Verification of compliance with the emission limitations of this Part 70 Permit shall be accomplished using the emission calculation method stated above. *§4-57; §4-60*

12.0 Emissions Testing. Emissions testing for this facility, if required by the Director, the Chattanooga-Hamilton County Air Pollution Control Bureau, may consist of particulate matter, sulfur dioxide (SO_2), nitrogen oxides (NO_x), carbon monoxide (CO), volatile organic compounds (VOC), and hazardous air pollutants (HAP) testing, and shall be performed in accordance with the U.S. EPA Test Methods contained in Title 40 *Code of Federal Regulations* Part 60, Appendix A and in accordance with the provisions in Section 4-3 of the Chattanooga Air Pollution Control Ordinance. *§4-3; §4-57(c)(1)*

13.0 Replacement of Equipment. The addition of air pollution control equipment to achieve additional emissions reductions and/or the replacement of air pollution control equipment with air pollution control of equal or greater control efficiency for each pollutant controlled by the original equipment are changes that qualify as operational flexibility with the following exception. The exception is that the air pollution control technology required by any regulation promulgated pursuant to Section 112 of the Clean Air Act codified at Title 40

Code of Federal Regulations Part 63, including control measures employed to demonstrate early reductions of hazardous air pollutants, is not eligible for replacement under operational flexibility. Operational flexibility changes are subject to the notification requirements of Paragraph 15.4 in the Conditions of General Applicability.

14.0 Usage of Equivalent Materials. United States Pipe and Foundry Company, Inc. may, at its discretion, employ the use of equivalent raw materials in plant operations. Equivalent raw materials are materials whose emissions of regulated air pollutants from the effected emission unit(s) shall not exceed the emissions allowed under this permit. No later than seven days prior to the change, United States Pipe and Foundry Company, Inc. shall provide the Chattanooga-Hamilton County Air Pollution Control Bureau an analysis of the projected hourly emission rate of all regulated air pollutants, including hazardous air pollutants, based on this change in the raw materials. *Part 70 Permit Application Request by Permittee*

EMISSION UNIT SPECIAL CONDITIONS

EMISSION UNIT 101 – CHARGE HANDLING

Charge Handling Equipment (E001)

1.0 The maximum emissions of particulate matter resulting from charge handling shall be limited to 8.57 pounds per hour and 37.53 tons per year. *§4-2; §4-57; §4-60*

2.0 Visible emissions from material handling shall not exceed an opacity of twenty percent for an aggregate of more than three minutes in any one hour or more than twenty minutes in any twenty-four-hour period. *§4-41, Rule 11.1*

EMISSION UNIT 102 – MELTING FACILITY

Cupola (E002)
Cupola Afterburner (CD001)

1.0 The maximum emissions of particulate matter from the melting facility shall be limited to 4.95 pounds per hour and 21.68 tons per year. Compliance with these emissions limitations shall be demonstrated by venting all captured cupola emissions through the Cupola baghouse (CD002) and by meeting the monitoring requirements of Condition 7.0 and Condition 8.0, Conditions Applicable to Entire Facility. The Cupola baghouse shall be in operation at all times during cupola operation except in accordance with Condition 13.0 of the Conditions of General Applicability. *§4-2; §4-57*

2.0 During startup and shutdown of the cupola, the owner or operator of the melting facility shall make such provisions or modifications as may be necessary so that visible emissions from the startup and shutdown of the cupola shall not exceed an opacity of twenty percent for an aggregate of more than five minutes in any one hour or more than twenty minutes in any twenty-four-hour period and so that mass emissions do not exceed 0.020 grains per dry standard cubic foot. *§4-41, Rule 3.1, Rule 26.12; §4-57*

3.0 The maximum emissions of sulfur dioxide (SO_2) from the melting facility shall be limited to 6.55 pounds per hour and 28.66 tons per year. This emissions limitation shall be met by limiting sulfur content in coke to 0.7 percent by weight. *§4-2; §4-57; Part 70 Permit Application Request by Permittee*

4.0 The maximum allowable emissions of nitrogen oxides (NO_x) from the melting facility shall be 20.02 pounds per hour and 87.69 tons per year. *§4-2; §4-41, Rule 2; §4-57*

5.0 All combustion emissions limitations shall be met by burning only natural gas or No.2 fuel oil as fuel in the cupola afterburner (CD001). *§4-57*

6.0 Operation of the cupola afterburner (CD001) shall be performed according to U.S. Pipe and Foundry Company's maintenance plan described in Condition 2.0, Conditions Applicable to the Entire Facility and the manufacturer's recommendations. The plan shall require adequate residence time and operating temperature for proper control efficiency. *§4-57*

7.0 The cupola afterburner (CD001) shall be operated at a minimum temperature of 1,100°F during melting operations. This temperature shall be logged hourly. Continuous monitoring of the operating temperature by strip or circular chart recorder shall satisfy this monitoring requirement. *§4-57*

EMISSION UNIT 103 – HOT METAL TRANSFER

Hot Metal Transfer from Melting (E003)

1.0 The maximum emissions of particulate matter resulting from hot metal transfer shall be limited to 2.08 pounds per hour and 9.12 tons per year. *§4-2; §4-57; §4-60*

2.0 Visible emissions from material handling shall not exceed an opacity of twenty percent for an aggregate of more than three minutes in any one hour or more than twenty minutes in any twenty-four-hour period. *§4-41, Rule 11.1*

EMISSION UNIT 104 – DESULFURIZATION & SLAGGING
Desulfurization Process (E004)

EMISSION UNIT 105 – INDUCTION HOLDING FURNACES
Hot Metal Transfer to Holding Furnace (E005)
Holding Furnace Preheat (E006)

EMISSION UNIT 106 – DUCTILE TREATING PROCESS
Treating Ladles (E007)

1.0 Emission limitations for particulate matter for these Emission Units shall be:

1.1 The maximum emissions of particulate matter from Emission Unit 104 (Desulfurization and Slagging E004) shall be limited to 12.31 pounds per hour and 53.92 tons per year. *§4-2; §4-57; §4-60*

1.2 The maximum emissions of particulate matter from Emission Unit 105 (Hot Metal Transfer to Holding Furnace E005 and Holding Furnace Preheat E006) shall be limited to 0.67 pounds per hour and 2.93 tons per year. *§4-2; §4-57; §4-60*

1.3 The maximum emissions of particulate matter from Emission Unit 106 (Ductile Treating Process) shall be limited to 0.756 pounds per hour and 3.312 tons per year. Compliance with this emissions limitation shall be demonstrated by the operation of an emissions capturing system. All captured emissions from ductile treating shall be vented through the Ductile Treating and No.9 Unit Shakeout baghouse (CD003). This baghouse shall be in operation at all times during ductile treating except in accordance with Condition 13.0 of the Conditions of General Applicability. *§4-2; §4-57*

1.4 Particulate emissions from the Ductile Treating and No.9 Unit Shakeout baghouse (CD003) stack (S007) shall not exceed 12.86 pounds per hour. These baghouse stack emissions consist of the combined emissions from the Ductile Treating Process (Emission Unit 106) and No.9 Unit Shakeout (Emission Unit 114). *§4-41, Rule 26.12*

Compliance with these limitations shall be demonstrated in accordance with the requirements of Condition 7.0 and Condition 8.0, Conditions Applicable to Entire Facility. *§4-57*

2.0 The maximum emissions of sulfur dioxide (SO_2) from the Induction Holding Furnace Pre-heaters shall be limited to 0.0004 pounds per hour and 0.002 tons per year. Compliance with this emission limitation shall be met by burning only natural gas as fuel in the Induction Holding Furnace Pre-heaters. *§4-2; §4-57*

3.0 The maximum emissions of nitrogen oxides (NO_x) from the Induction Holding Furnace Pre-heaters are 0.067 pounds per hour and 0.295 tons per year. Compliance with this emission

limitation shall be met by burning only natural gas as fuel in the Induction Holding Furnace Pre-heaters. *§4-2; §4-57; §4-60*

EMISSION UNIT 107 – No.9 UNIT INOCULATION & SLAGGING
No.9 Unit Inoculation Process (E008)

EMISSION UNIT 108 – No.10 UNIT INOCULATION & SLAGGING
No.10 Unit Inoculation (E009)

EMISSION UNIT 109 – FITTING PLANT POURING & COOLING OPERATIONS
No.9 Unit Pouring (E010)
No.9 Unit Cooling (E011)
No.10 Unit Pouring & Cooling (E013)

1.0 The maximum emissions of particulate matter from No.9 Unit Inoculation and Slagging shall be limited to 12.06 pounds per hour and 52.82 tons per year. *§4-2; §4-57; §4-60*

2.0 The maximum emissions of particulate matter from No.10 Unit Inoculation & Slagging operations shall be limited to 4.48 pounds per hour and 19.63 tons per year. *§4-2; §4-57; §4-60*

3.0 Combined emissions of particulate matter from Fitting Plant Pouring & Cooling shall not exceed 21.94 pounds per hour and 96.10 tons per year. *§4-2; §4-57; §4-60*

EMISSION UNIT 110 – No.9 UNIT SHAKEOUT

No.9 Unit Shakeout (E014)

1.0 The maximum emissions of particulate matter from No.9 Unit Shakeout operations shall be limited to 7.277 pounds per hour and 31.87 tons per year. At all times during No.9 Unit Shakeout operations, an emissions capturing system shall be in operation to minimize fugitive emissions from this source. All captured emissions from the No.9 Unit Shakeout shall be vented through the Ductile Treating and No.9 Shakeout Baghouse (CD003). This capture system and baghouse shall be in operation at all times during shakeout operations except in accordance with Condition 13.0 of the Conditions of General Applicability.

2.0 Particulate emissions from the Ductile Treating and No.9 Unit Shakeout baghouse (CD003) stack (S007) shall not exceed 12.86 pounds per hour. These emissions consist of combined captured emissions from the Ductile Treating Process (Emission Unit 106) and No.9 Unit Shakeout (E014 of Emission Unit 110). *§4-41, Rule 26.12*

EMISSION UNIT 111 – No.10 UNIT SHAKEOUT

No.10 Unit Shakeout (E015)

1.0 The maximum emissions of particulate matter from No.10 Unit Shakeout operations shall be limited to 21.26 pounds per hour and 93.12 tons per year. *§4-2; §4-57; §4-60*

2.0 Particulate emissions from the No. 10 Shakeout Sand Conveyor baghouse (CD050) stack (S092) shall not exceed 0.02 grains per dry standard cubic foot. *§4-41, Rule 26.12*

3.0 Particulate emissions from the No. 10 Shakeout baghouse (CD051) stack (S093) shall not exceed 0.02 grains per dry standard cubic foot. *§4-41, Rule 26.12*

EMISSION UNIT 112 – No.9 UNIT CASTING CLEANING

No.9 Unit Casting Handling (E018)
No.9 Unit Secondary Shakeout (E019)
No.9 Unit Casting Rotoblast Monorail & Table (E021)
Casting Cooling Conveyor (E132)
No.9 Unit Casting Automatic Cleaner (E133)

1.0 Combined emissions of particulate matter resulting from No.9 Unit Casting Cleaning operations shall not exceed 14.70 pounds per hour and 64.37 tons per year.

2.0 At all times during No.9 Unit Secondary Shakeout operations, an emissions capturing system shall be in operation to minimize fugitive emissions from this source.

3.0 All captured emissions captured from No.9 Unit Secondary Shakeout shall be vented through the No.9 Unit Secondary Shakeout baghouse (CD006). This baghouse shall be in operation at all times during secondary shakeout operations except in accordance with Condition 13.0 of the Conditions of General Applicability. *§4-57*

4.0 The maximum allowable particulate emissions from the No.9 Unit Secondary Shakeout baghouse (CD006) stack (S022) shall be 2.571 pounds per hour as calculated based on a grain loading of 0.02 grains per dry standard cubic foot and the reported exhaust flow rate. *§4-2; §4-41, Rule 26.12; §4-57*

5.0 All captured emissions from the No.9 Casting Automatic Cleaner shall be vented through the No.9 Casting Automatic Cleaner Baghouse (CD007). This baghouse shall be in operation at all times during rotoblast operations except in accordance with Condition 13.0 of the Conditions of General Applicability. *§4-57*

6.0 The maximum allowable particulate emissions from the No.9 Casting Automatic Cleaner baghouse (CD007) stack (S023) shall be 2.5 pounds per hour. This condition has been determined to be Reasonable and Proper Control by the Director, the Chattanooga-Hamilton County Air Pollution Control Bureau. *§4-2; §4-41, Rule 27.3; §4-57*

7.0 All captured emissions from the No.9 Unit Rotoblast Monorail and Table shall be vented through the Pangborn Monorail and Rotoblast Table baghouse (CD008). This baghouse shall be in operation at all times during monorail and rotoblast table operations except in accordance with Condition 13.0 of the Conditions of General Applicability. *§4-57*

8.0 The maximum allowable particulate emissions from the No.9 Unit Rotoblast Monorail and Table baghouse (CD008) stack (S024) shall be 2.362 pounds per hour based on a grain loading of 0.02 grains per dry standard cubic foot and the reported exhaust flow rate. *§4-2; §4-41, Rule 26.12; §4-57*

9.0 All captured emissions from the No.9 Casting Cooling Conveyor shall be vented through the No.9 Casting Cooling Conveyor baghouse (CD047). This baghouse shall be in operation at

all times during cooling conveyor operations except in accordance with Condition 13.0 of the Conditions of General Applicability. *§4-57*

10.0 The maximum allowable particulate emissions from the No.9 Casting Cooling Conveyor baghouse (CD047) stack (S090) shall be 0.10 pounds per hour. This condition is Reasonable and Proper control as determined by the Director, the Chattanooga-Hamilton County Air Pollution Control Bureau. *§4-41, Rule 27.3; §4-57*

EMISSION UNIT 113 – No. 10 UNIT CASTING CLEANING

12' Rotoblast Table (E017)

1.0 The maximum emissions of particulate matter resulting from No.10 Unit Casting Cleaning operations shall be limited to 0.62 pounds per hour and 2.71 tons per year. *§4-41, Rule 26.12*

2.0 The exhaust from the 12' Rotoblast Table shall be vented through the Pangborn Large Casting Rotoblast baghouse (CD005). This baghouse shall be in operation at all times during operation of the rotoblast table except in accordance with Condition 13.0 of the Conditions of General Applicability. *§4-57*

3.0 The maximum allowable particulate emissions from the Large Casting Rotoblast baghouse (CD005) stack (S018) shall be 1.735 pounds per hour based on a grain loading of 0.02 grains per dry standard cubic foot and the reported exhaust flow rate. *§4-41, Rule 26.12*

EMISSION UNIT 114 – GRINDING, FINISHING, & PRIMING

Casting Finishing Area No.1 (E084)
Casting Finishing Area No.2 (E085)
Casting Finishing Area No.3 (E086)
Casting Finishing Area No.4 (E087)
Primer Dip Coating Operation (E088)

1.0 The maximum emissions of particulate matter from Grinding, Finishing, and Priming operations shall be limited to 1.76 pounds per hour and 7.70 tons per year. Compliance with these emissions limitations shall be demonstrated in accordance with Condition 7.0, Conditions Applicable to Entire Facility. *§4-2; §4-57; §4-60*

2.0 The volatile organic compound (VOC) content in all surface coatings used in the Primer Dip Coating Operation shall not exceed 3.5 pounds per gallon of coating, less water and exempt solvents, as delivered to the applicator. *§4-2; §4-41, Rule 25.21; §4-57; §4-60*

3.0 A log of the Primer Dip Coating Operation shall be maintained and shall reflect the date and quantity of coating delivered. *§4-57*

EMISSION UNIT 115 – CEMENT LINING BUILDING

Cement Mixing and Lining Stations (E089-E095)
Cement Lining Drying Ovens Nos.1, 3, and 4 (E096-E098)
No.1 and No.3 Dip Paint Lines (E099, E102)
Binks Spray Paint Booth (E100)
Large Fittings Paint Booth (E101)
Coating Drying Ovens Nos.1 and 3 (E103-E104)

1.0 The maximum emissions of particulate matter resulting from operations in the Cement Lining Building shall be limited to 1.05 pounds per hour and 4.6 tons per year. Compliance with this emission limitation shall be demonstrated by the following:

1.1 All captured emissions from the Binks Spray Paint Booth and the Large Fittings Paint Booth shall be vented through their respective dry filter systems (CD034 and CD035). These filter systems shall be in place at all times during paint booth operations except in accordance with Condition 13.0 of the Conditions of General Applicability.

1.2 Inspection and preventative maintenance of the booths and filters shall be conducted in accordance with U.S. Pipe and Foundry Company's maintenance plan described in Condition 2.0, Conditions Applicable to Entire Facility.

1.3 The maximum allowable particulate emissions from the Large Fittings Paint Spray Booth exhaust stack (S068) shall be 0.03 pounds per hour. This emissions limitation has been determined to be Best Available Control Technology (BACT) by the Director, the Chattanooga-Hamilton County Air Pollution Control. *§4-8(e)(2)*

1.4 Only natural gas may be burned as fuel in cement lining and coating drying ovens.

§4-2; §4-8; §4-57

2.0 The maximum emissions of sulfur dioxide (SO_2) from the drying ovens shall be limited to 0.002 pounds per hour and 0.009 tons per year. Compliance with this emission limitation shall be demonstrated by burning only natural gas as fuel in the drying ovens. *§4-2; §4-57*

3.0 The maximum emissions of nitrogen oxides (NO_x) from the drying ovens shall be limited to 0.35 pounds per hour and 1.53 tons per year. Compliance with this emission limitation shall be demonstrated by burning only natural gas as fuel in the drying ovens. *§4-2; §4-57*

4.0 The volatile organic compound (VOC) content of all coatings applied in the Cement Lining Building shall not exceed 3.5 pounds per gallon less water and exempt solvents as delivered to the applicator. A log shall be maintained of the data reflecting the date and quantity of coatings and cleaning solvents used during operations in the Cement Lining Building. This condition has been determined to be Best Available Control Technology (BACT) by the

Director, the Chattanooga-Hamilton County Air Pollution Control Bureau. *§4-41, Rule 25.21; §4-57; §4-60*

EMISSION UNIT 116 – SPECIAL COATINGS OPERATION

Special Coating Spray Booth (E105)
Special Coating Drying Oven (E106)

1.0 The maximum emissions of particulate matter resulting from the Special Coatings Operation shall be limited to 0.993 pounds per hour and 4.37 tons per year. Compliance with this emission limitation shall be demonstrated by the following:

1.1 The exhaust from the Special Coating Spray Booth shall be vented through the dry filter system (CD036). This filter system shall be in place at all times during spray booth operations.

1.2 Inspection and preventative maintenance of the booth and filters shall be conducted in accordance with U.S. Pipe and Foundry Company's maintenance plan described in Condition 2.0, Conditions Applicable to Entire Facility.

1.3 Only natural gas may be burned as fuel in the Special Coatings Drying Oven.

§4-2; §4-57

2.0 The maximum emissions of sulfur dioxide (SO_2) resulting from the Special Coating Drying Oven shall be limited to 0.008 pounds per hour and 0.04 tons per year. Compliance with this emission limitation shall be demonstrated by burning only natural gas as fuel in the Special Coating Drying Oven. *§4-2; §4-57*

3.0 The maximum emissions of nitrogen oxides (NO_x) resulting from the Special Coating Drying Oven shall be limited to 0.12 pounds per hour and 0.53 tons per year. Compliance with this emission limitation shall be demonstrated by burning only natural gas as fuel in the Special Coatings Drying. *§4-2; §4-57*

4.0 The volatile organic compounds (VOC) content of all coatings used in the Special Coatings Operation shall not exceed 3.5 pounds per gallon of coating less water and exempt solvents as delivered to the applicator. A log shall be maintained of the data reflecting the amount, date, and type of coatings and solvents used in the Special Coating Operation. This condition has been determined to be Best Available Control Technology (BACT) by the Director, the Chattanooga-Hamilton County Air Pollution Control Bureau. *§4-41, Rule 25; §4-57*

EMISSION UNIT 118 – No.10 UNIT AIRSET MOLD SYSTEM

Pneumatic Sand Transporter to Mold Sand Silo (E040)
Sand Heaters (E041)
Sand Mixers (E042)
Mold Forming (E043)

1.0 The maximum emissions of particulate matter resulting from the No.10 Unit Airset Mold System shall be limited to 0.55 pounds per hour and 1.98 tons per year. Compliance with this emission limitation shall be demonstrated by the following:

1.1 The exhaust from silo loading shall be vented through the No.10 Unit Mold Sand Tank baghouse (CD019). This baghouse shall be in operation at all times during the silo loading process except in accordance with Condition 13.0 of the Conditions of General Applicability. *§4-41, Rule 27; §4-57*

1.2 The maximum allowable particulate emissions from the No.10 Unit Mold Sand Tank baghouse (CD019) stack (S041) shall be 0.005 pounds per hour. *§4-41, Rule 27*

1.3 The exhaust from pneumatic transport operations shall be vented through the No.10 Unit Mold Sand Heaters baghouse (CD020). This baghouse shall be in operation at all times during sand transport and sand heater operation except in accordance with Condition 13.0 of the Conditions of General Applicability. *§4-41, Rule 27; §4-57*

1.4 The maximum allowable particulate emissions from the No.10 Mold Sand Heaters baghouse (CD020) stack (S008B) shall be 0.01 pounds per hour. *§4-41, Rule 27*

1.5 The exhaust from the No.10 Unit Mold Sand mixers shall be vented through the No.10 Unit Mold Sand Mixer No.1 baghouse (CD021) and No.10 Unit Mold Sand Mixer No.2 baghouse (CD022). These baghouses shall be in operation at all times during sand transport and sand heater operation except in accordance with Condition 13.0 of the Conditions of General Applicability. *§4-41, Rule 27; §4-57*

2.0 Volatile organic compound emissions from the No. 10 Unit Airset Mold System shall be limited to 37.64 tons per twelve consecutive months. Compliance with this limitation shall be demonstrated through Condition 3.0. *§4-41, Rule 25; §4-57*

3.0 The total iron poured on No. 10 Unit shall not exceed 20,166 tons per consecutive twelve months. A monthly log of iron poured on No. 10 Unit shall be maintained. At a minimum, the log shall contain the date, the amount of iron poured for the month, the amount of iron poured for the previous twelve months, and the initials of the operator. *§4-41, Rule 25, Rule 27; §4-57*

EMISSION UNIT 119 – No.10 UNIT SAND RECLAMATION

Size Reduction Process (E036)
Classifier Process (E037)
MacCawber Pneumatic Sand Transporter to Reclaimed Sand No.1 Bulk Silo (E038)
MacCawber Pneumatic Sand Transporter to New Sand No.2 Bulk Silo (E039)

1.0 The maximum emissions of particulate matter resulting from the No.10 Unit Sand Reclamation process shall be limited to 0.064 pounds per hour and 0.23 tons per year. Compliance with this emission limitation shall be achieved by the following:

1.1 All emissions from the sand reclaimer and size reducer shall be vented through the Fines Baghouse (CD016). This baghouse shall be in operation at all times during sand reclamation and size reduction except in accordance with Condition 13.0 of the Conditions of General Applicability. *§4-57*

1.2 The maximum allowable particulate emissions from the Fines Baghouse (CD016) stack (S037) shall be 0.02 pounds per hour. *§4-41, Rule 27; §4-57*

1.3 All emissions from the classifier shall be vented through the Sand Reclaimer Classifier baghouse (CD017). This baghouse shall be in operation at all times during the clarification process except in accordance with Condition 13.0 of the Conditions of General Applicability. *§4-57*

1.4 The maximum allowable particulate emissions from the Sand Reclaimer Classifier baghouse (CD017) stack (S038) shall be 0.02 pounds per hour. *§4-41, Rule 27; §4-57*

1.5 All emissions from the loading of Reclaimed Sand No.1 and No.2 Bulk Silos shall be vented through the Bulk Sand Silo baghouse (CD018). This baghouse shall be in operation at all times during the loading of these silos except in accordance with Condition 13.0 of the Conditions of General Applicability. *§4-57*

1.6 The maximum allowable particulate emissions the Bulk Sand Silo baghouse (CD018) stack (S040) shall be 0.01 pounds per hour. *§4-41, Rule 27; §4-57*

2.0 The total iron poured on No. 10 Unit shall not exceed 20,166 tons per consecutive twelve months. A monthly log of iron poured on No. 10 Unit shall be maintained. At a minimum, the log shall contain the date, the amount of iron poured for the month, the amount of iron poured for the previous twelve months, and the initials of the operator. *§4-41, Rule 27; §4-57*

EMISSION UNIT 120 – No.9 UNIT GREENSAND MOLD SYSTEM

Sand Conveying (E022)
Sand Screening Drum (E023)
Sand Return to Storage Silo (E024)
Greensand Mullors A and B (E025)
Herman Mold Machine (E026)
Binder Unloading to Storage Silo (E027)
Binder Conveying (E028)

1.0 The maximum emissions of particulate matter resulting from the No.9 Unit Greensand Mold System shall be limited to 12.98 pounds per hour and 54.16 tons per year.

2.0 The exhaust from the sand screening drums shall be vented through the Sand Screening Drum Cyclones (CD009). These cyclones shall be in operation at all times during sand screening operation except in accordance with Condition 13.0 of the Conditions of General Applicability. *§4-57*

3.0 The maximum allowable particulate emissions from the Sand Screening Drum cyclones (CD009) stack (S025) shall be 0.75 pounds per hour. This emissions limitation has been determined to be Best Available Control Technology (BACT) by the Director, the Chattanooga-Hamilton County Air Pollution Control Bureau. *§4-8(e)(2); §4-57*

4.0 Operation of the No.9 Unit Greensand Mold System shall not exceed 4,000 hours in any 365-consecutive-day period. Monthly hours of operation shall be recorded in a log. At a minimum, the log shall contain the hours of operation for the month, the total hours of operation for the previous twelve months, and the operator's initials. This limitation has been determined to be Best Available Control Technology (BACT) by the Director, the Chattanooga-Hamilton County Air Pollution Control Bureau. *§4-8(e)(2); §4-57*

5.0 The exhaust from the loading of the Greensand Binder Storage Silo shall be vented through the No.9 Unit Greensand Binder Storage Silo bin vent filter (CD010). This bin vent filter shall be in operation at all times during silo loading except in accordance with Condition 13.0 of the Conditions of General Applicability. *§4-57*

6.0 The exhaust from Binder Conveyor A shall be vented through the conveyor baghouse (CD012). This baghouse shall be in operation at all times during binder conveying operations except in accordance with Condition 13.0 of the Conditions of General Applicability. *§4-57*

7.0 The exhaust from Binder Conveyor B shall be vented through the conveyor baghouse (CD013). This baghouse shall be in operations at all times during binder conveying operations except in accordance with Condition 13.0 of the Conditions of General Applicability. *§4-57*

8.0 The maximum allowable particulate emissions from each binder conveyor baghouse (CD012-013) shall be 0.457 pounds per hour based on a grain loading of 0.020 grains per dry standard cubic foot and the reported exhaust flow rate. *§4-41, Rule 26.12; §4-57*

EMISSION UNIT 121 – SHELL CORES PROCESS

Shell Core Sand Handling (E082)
Shell Core Heating (E083)

1.0 The maximum emissions of particulate matter from the Shell Cores Process shall be limited to 1.12 pounds per hour and 4.91 tons per year. Compliance with these emissions limitations shall be demonstrated in accordance with Condition 7.0, Conditions Applicable to Entire Facility. *§4-41, Rule 10; §4-57; §4-60*

2.0 The maximum emissions of sulfur dioxide (SO_2) resulting from Shell Core Heating operations shall be limited to 0.001 pounds per hour and 0.005 tons per year. Compliance with this emissions limitation shall be demonstrated by burning only natural gas as fuel in the shell core sand heater. *§4-2; §4-57*

3.0 The maximum emissions of nitrogen oxides (NO_x) resulting from Shell Core Heating operations shall be limited to 0.185 pounds per hour and 0.81 tons per year. Compliance with this emission limitation shall be demonstrated by burning only natural gas as fuel in the shell core sand heater. *§4-41, Rule 2; §4-57*

EMISSION UNIT 122 – AIRSET CORE SYSTEM

Airset Binder Bulk Storage Tank (E046)
Airset Acid Bulk Storage Tank (E048)
Pneumatic Conveying for Airset Core Sand Silo (E050)
Sand Heater (E051)
Sand Mixer (E052)
Core Forming (E053)

1.0 The maximum emissions of particulate matter resulting from the Airset Core System shall be limited to 5.314 pounds per hour and 23.28 tons per year. *§4-41, Rule 26.12*

2.0 The exhaust from loading of the airset sand silo shall be vented through the Airset Core Sand Tank baghouse (CD023). This baghouse shall be in operation at all times during the airset sand silo loading process except in accordance with Condition 13.0 of the Conditions of General Applicability. *§4-57*

3.0 The exhaust from the sand heating process shall be vented through the Airset Core Heater cyclone (CD024) and Airset Core Sand Tank baghouse (CD023). This cyclone and baghouse shall be in operation at all times during the sand heating process except in accordance with Condition 13.0 of the Conditions of General Applicability. *§4-57*

4.0 The maximum allowable particulate emissions from the Airset Core Sand Tank baghouse (CD023) stack (S045) shall be 0.171 pounds per hour based on a grain loading of 0.02 grains per dry standard cubic foot and the reported exhaust flow rate. *§4-41, Rule 26.12*

EMISSION UNIT 123 – ISOCURE CORE SYSTEM

Isocure Part 1 Bulk Storage Tank (E054)
Isocure Part 2 Bulk Storage Tank (E057)
No.3 Bulk Sand Silo (E060)
No.3 and No.4 Isocure Sand Silo (E061)
No.5 Isocure Sand Silo (E062)
No.3, No.4, & No.5 Isocure Sand Heaters (E063-E065)
No.3, No.4, and No.5 Sand Mixers (E066-E068)
Isocure Machines No.3, No.4, & No.5 (E069-E071)
No.6 & No.7 Isocure Sand Silo (E122)
No.6 & No.7 Sand Heaters (E123-E124)
Isocure Machines No.6, No.7, & No.8 (E129-E131)

1.0 The maximum emissions of particulate matter from the Isocure Core System shall be limited to 1.26 pounds per hour and 5.52 tons per year. Compliance with these emission limitations shall be demonstrated by the following:

1.1 The exhaust from the loading of the No.3 Bulk Sand Silo (E060) shall be vented through the Farr Bulk Sand Silo baghouse (CD025). This baghouse shall be in operation at all times during silo loading operations except in accordance with Condition 13.0 of the Conditions of General Applicability.

1.2 The maximum allowable particulate emissions from the Bulk Sand Silo baghouse (CD025) stack (S048) shall be 0.17 pounds per hour based on a grain loading of 0.020 grains per dry standard cubic foot and the reported exhaust flow rate. These stack emissions are combined emissions from Bulk Sand Silo loading (E060 of Emission Unit 123) and Pepset Sand Heater Operation (E077 of Emission Unit 124). *§4-41, Rule 26.12*

1.3 The exhaust from the loading of the No.3 and No.4 Isocure Sand Silo (E061) shall be vented through the No.3 and No.4 Isocure Sand Silo baghouse (CD026). This baghouse shall be in operation at all times during sand loading operations except in accordance with Condition 13.0 of the Conditions of General Applicability.

1.4 The maximum allowable particulate emissions from the No.3 & No.4 Isocure Sand Silo baghouse (CD026) stack (S049) shall be 0.17 pounds per hour based on a grain loading of 0.020 grains per dry standard cubic foot and the reported exhaust flow rate. *§4-41, Rule 26.12*

1.5 The exhaust from the loading of the No.5 Isocure Sand Silo shall be vented through the No.5 Isocure Sand Silo baghouse (CD027). This baghouse shall be in operation at all times during sand loading operations except in accordance with Condition 13.0 of the Conditions of General Applicability.

1.6 All emissions from the sand heaters (E063-E065) shall be vented through the Sand Heaters cyclones (CD028-030) and the Sand Silo baghouses (CD026-027). These cyclones and baghouse shall be in operation at all times during sand heater operation except in accordance with Condition 13.0 of the Conditions of General Applicability.

1.7 The maximum allowable particulate emissions from the No.5 Isocure Sand Silo baghouse (CD027) stack (S050) shall be 0.17 pounds per hour based on a grain loading of 0.020 grains per dry standard cubic foot and the reported exhaust flow rate. *§4-41, Rule 26.12*

1.8 The exhaust from the loading of the No.6 & No.7 Isocure Sand Silo (E122) and the pneumatic transport of sand to the No.6 & No.7 Sand Heaters (E123-E124) shall be vented through the No.6 & No.7 Isocure Sand Silo baghouse (CD043). This baghouse shall be in operation at all times during silo loading operations except in accordance with Condition 13.0 of the Conditions of General Applicability. *§4-41, Rule 27; §4-57*

1.9 The maximum allowable particulate emissions from the No.6 & No.7 Isocure Sand Silo baghouse (CD043) stack (S086) shall be 0.17 pounds per hour. *§4-41; Rule 27; §4-57*

These limitations and conditions have been determined to be reasonable and proper by the Director, the Chattanooga-Hamilton County Air Pollution Control Bureau. *§4-41, Rule 27; §4-57*

2.0 The maximum allowable emissions of volatile organic compounds (VOC) resulting from Isocure Core Machine Nos. 3, 4, 5, 6, 7, and 8 shall be 28.67 tons per rolling twelve months. Compliance with this emission limitation shall be demonstrated by the following:

2.1 The total usage of isocure core resins shall not exceed 750,000 pounds in any 365 consecutive-day period.

2.2 The weighted average of volatile organic compounds in unreacted resins shall not exceed 30.5% by weight as determined by U.S. EPA reference Method 24, Title 40 *Code of Federal Regulations* Part 60, Appendix A and in accordance with §4-3 of the Chattanooga Air Pollution Control Ordinance.

2.3 The total usage of triethylamine shall not exceed 45,000 pounds in any 365 consecutive-day period.

2.4 Emissions of triethylamine from the isocure process shall be vented through the packed tower acid scrubbers. An operating pH for the acid scrubbers shall be maintained at or below 5.0 as measured at the scrubber drain. This pH reading shall be recorded daily in a log.

This condition has been determined to be Best Available Control Technology (BACT) by the Director, the Chattanooga-Hamilton County Air Pollution Control Bureau. *§4-41, Rule 25.3*

3.0 The owner or operator of this source shall utilize appropriate methods and technology to control onsite gaseous emissions so as to prevent odors from these emissions from being detected beyond the plant property boundary. This condition has been determined to be reasonable and proper by the Director, the Chattanooga-Hamilton County Air Pollution Control Bureau. *§4-41, Rule 12 (Local Only)*

EMISSION UNIT 124 – PEPSET CORE MAKING

Pepset Binder Bulk Storage Tank (E073)
Pepset Acid Bulk Storage Tank (E075)
Pepset Sand Heater (E077)
Sand Mixer (E078)
Core Forming (E079)

1.0 The maximum emissions of particulate matter resulting from the pepset core making process shall be limited to 0.41 pounds per hour and 1.81 tons per year.

2.0 The exhaust from the sand heater shall be vented through the Pepset Sand Heater cyclone (CD033) and the No. 3 Bulk Sand Silo baghouse (CD025). This cyclone and baghouse shall be in operation at all times during the pepset core making process except in accordance with Condition 13.0 of the Conditions of General Applicability. *§4-57*

3.0 The maximum allowable particulate emissions from the No.3 Bulk Sand Silo baghouse (CD025) stack (S048) shall be 0.01 pounds per hour. *§4-2; §4-57*

EMISSION UNIT 125 – REFRACTORY COATING OPERATIONS

Refractory Coating (E072)
Flame-off (E081)

1.0 The maximum emissions of particulate matter resulting from Refractory Coating Flame-off operations (E081) shall be limited to 0.0003 pounds per hour and 0.002 tons per year. Compliance with this emissions limitation shall be demonstrated by burning only natural gas as fuel in the flame-off burner. *§4-2; §4-57; §4-60*

2.0 The maximum emissions of sulfur dioxide (SO_2) resulting from Refractory Coating Flame-off operations (E081) shall be limited to 0.0003 pounds per hour and 0.002 tons per year. Compliance with this emissions limitation shall be demonstrated by burning only natural gas as fuel in the flame-off burner. *§4-2; §4-57; §4-60*

3.0 The maximum emissions of nitrogen oxides (NO_x) resulting from Refractory Coating Flame-off operations (E081) shall be limited to 0.057 pounds per hour and 0.248 tons per year. Compliance with this emissions limitation shall be demonstrated by burning only natural gas as fuel in the flame-off burner. *§4-2; §4-57; §4-60*

4.0 The maximum allowable emissions of volatile organic compounds (VOCs) resulting from Refractory Coating operations (E072) shall be 74.55 tons per rolling twelve months. *§4-41, Rule 25; §4-57*

5.0 VOC emissions from Refractory Coating operations shall be calculated by applying a destruction efficiency of fifty percent to the VOCs contained in the applied refractory coatings for cores and molds that are subjected to the flame-off process. For those cores and molds which are not subjected to the flame-off process, one hundred percent of the total VOCs contained in the applied refractory coatings shall be considered to be emitted. *4-41, Rule 25; §4-57*

6.0 United States Pipe and Foundry Company shall maintain a monthly log of volatile organic compound emissions from Refractory Coating operations. At a minimum, this log shall contain the month, the year, the type and quantity of each VOC-containing material used during the month, the quantity of volatile organic compound emissions during the month, the quantity of volatile organic compound emissions for the previous twelve months, and the initials of the operator. *4-41, Rule 25; §4-57*

7.0 Supporting documentation for the calculation of volatile organic compounds emissions shall be maintained. Such documentation shall include, but is not limited to purchase orders, invoices, material safety data sheets, material composition test results, and emissions test results. *4-41, Rule 25; §4-57*

EMISSION UNIT 126 – PACKAGING AND SHIPPING AREA

Asphalt Coating Bulk Storage Tank No.1 (E107)
Asphalt Coating Bulk Storage Tank No.2 (E108)
Touchup Coating (E109)

1.0 The maximum allowable emissions of particulate matter resulting from touchup coating operations shall not exceed 0.51 pounds per hour per spray gun. Compliance with this emission limitation shall be met by a zero percent opacity limitation for touchup coating operations. *§4-41, Rule 10; §4-57*

2.0 The volatile organic compound (VOC) content of all coatings used in the packaging and shipping area shall not exceed 3.5 pounds per gallon of coating less water and exempt solvents as delivered to the applicator. This condition has been determined to be Best Available Control Technology (BACT) by the Director, the Chattanooga-Hamilton County Air Pollution Control Bureau. *§4-41, Rule 25.2; §4-57*

3.0 A log shall be maintained of the data reflecting the amount, date, and type of coatings and solvents used in the packaging and shipping area. *§4-57*

EMISSION UNIT 127 – ANCILLARY FITTING PLANT OPERATIONS

Cupola Baghouse Dust Solidification (E110)
Cupola Drying (E111)
Pattern Shop (E113)
Ladle Pre-heat (E114)
Bathhouse Boiler (E115)
Asphalt Hot Oil Heater (E116)

1.0 The maximum allowable emissions of particulate matter resulting from Cupola Baghouse Dust Solidification operations shall be 0.003 pounds per hour and 0.009 tons per year. This condition has been determined to be Best Available Control Technology (BACT) by the Director, the Chattanooga-Hamilton County Air Pollution Control Bureau. *§4-8(e)(2)*

2.0 The exhaust from the pneumatic conveying of cupola dust in the Cupola Baghouse Dust Solidification process shall be vented through the Cupola Baghouse Dust Solidification baghouse (CD037). This baghouse shall be in operation at all times during Cupola Baghouse Dust Solidification operations. This condition has been determined to be Best Available Control Technology (BACT) by the Director, the Chattanooga-Hamilton County Air Pollution Control Bureau. *§4-8(e)(2); §4-57*

3.0 The maximum combined emissions of particulate matter from these combustion sources (E111, E114, E115, & E116) shall be limited to 0.051 pounds per hour and 0.192 tons per year. Compliance with this emission limitation shall be demonstrated by burning only natural gas as fuel in cupola drying operations. *§4-2; §4-41, Rule 8.2; §4-57*

4.0 An emission capture system shall be in operation at all times during Pattern Shop (E113) operation except in accordance with Condition 13.0 of the Conditions of General Applicability. *§4-57*

5.0 All captured emissions from the pattern shop equipment shall be vented through the pattern shop cyclone (CD039). This cyclone shall be in operation at all times during pattern shop operation except in accordance with Condition 13.0 of the Conditions of General Applicability. *§4-57*

6.0 The maximum allowable emissions of particulate matter from the pattern shop cyclone (CD039) stack (S078) shall be 3.86 pounds per hour and 16.9 tons per year based on a grain loading of 0.030 grains per dry standard cubic foot and the reported exhaust flow rate. *§4-41, Rule 26.18; §4-57*

7.0 The maximum combined emissions of sulfur dioxide (SO_2) resulting from these combustion sources (E111, E114, E115, & E116) shall be limited to 0.003 pounds per hour and 0.011 tons per year. Compliance with this emission limitation shall be demonstrated by burning only natural gas as fuel in this equipment. *§4-2; §4-57*

8.0 The maximum combined emissions of nitrogen oxides (NO_x) resulting from these combustion sources (E111, E114, E115, & E116) shall be limited to 0.466 pounds per hour and 1.76 tons per year. Compliance with this emission limitation shall be demonstrated by burning only natural gas as fuel in this equipment. *§4-2; §4-57*

EMISSION UNIT 128 – FUSION BONDED EPOXY PROCESS

GLA Burn-off Oven with Afterburner (E123)
FBE Rotoblast Barrels (E134, E135, E136)
PCP Burn-off Oven No. 2 (E140)

1.0 The maximum emissions of particulate matter from the FBE Rotoblast Barrels (E134, E135, E136) operation shall be limited to 2.45 pounds per hour and 10.73 tons per year. All captured emissions from the FBE Rotoblast Barrels (E134, E135, E136) shall be vented through the FBE Rotoblast Barrels baghouse (CD048). This baghouse shall be in operation at all times during rotoblast table cleaner operation except in accordance with Condition 13.0 of the Conditions of General Applicability. *§4-2; §4-41, Rule 27.3; §4-57; §4-60*

2.0 The maximum emissions of particulate matter from the GLA Burn-off Oven (E123) shall be limited to 0.10 pounds per hour and 0.438 tons per year. Compliance with this emission limitation shall be demonstrated by burning only natural gas as fuel in this equipment. This condition has been determined to be reasonable and proper control by the Director, the Chattanooga-Hamilton County Air Pollution Control Bureau. *§4-2; §4-41, Rule 27.3; §4-57*

3.0 The maximum emissions of nitrogen oxides (NO_x) from the GLA Burn-off Oven and afterburner shall be limited to 0.60 pounds per hour and 2.63 tons per year. Compliance with this emission limitation shall be demonstrated by burning only natural gas as fuel in this equipment. *§4-41, Rule 2; §4-57*

4.0 The maximum emissions of sulfur dioxide (SO_2) from the GLA Burn-off Oven and afterburner shall be limited to 0.001 pound per hour and 0.0044 tons per year. Compliance with this emission limitation shall be demonstrated by burning only natural gas as fuel in this equipment. *§4-2; §4-57*

5.0 The maximum emissions of volatile organic compounds (VOC) from the GLA Burn-off Oven and afterburner shall be limited to 0.01 pounds per hour and 0.044 tons per year. Compliance with this emission limitation shall be demonstrated by the following:

5.1 Only natural gas shall be burned as fuel in this equipment. This condition has been determined to be Best Available Control Technology (BACT) by the Director, the Chattanooga-Hamilton County Air Pollution Control Bureau. *§4-41, Rule 25.3; §4-57*

5.2 All emissions resulting from the pyrolysis of epoxy coatings shall be vented through the GLA afterburner. This afterburner shall be in operation at all times during GLA oven operations. This condition has been determined to be reasonable and proper control by the Director, the Chattanooga-Hamilton County Air Pollution Control Bureau. *§4-41, Rule 23*

6.0 Fuel usage in PCP Burn-off Oven No. 2 shall be limited to natural gas. *§4-57*

7.0 Particulate matter emissions from PCP Burn-off Oven No. 2 shall not exceed 0.009 pounds per hour. This emissions limitation has been determined to be reasonable and proper by the Director. *§4-41, Rule 27*

8.0 Volatile organic compound emissions from PCP Burn-off Oven No. 2 shall be vented to and controlled by an afterburner that is an integral part of the oven. The afterburner shall be operated and maintained in accordance with the manufacturer's recommendations. The oven shall not be operated if its afterburner is not in operation. These requirements are best available control technology (BACT), as determined by the Director. *§4-41, Rule 25.3*

EMISSION UNIT 206 – VALVE & HYDRANT PRODUCTION

Small Valve Paint Booth (EV022)
Large Valve Touchup Coating Operation (EV023)
Hydrant Production Paint Booth (EV024)

1.0 The maximum emissions of particulate matter resulting from valve product operations shall be limited to 0.47 pounds per hour and 2.03 tons per year. Compliance with this emissions limitation shall be demonstrated by the following:

1.1 All emissions from the Small Valve Paint Booth shall vented through the dry filter assembly (CDV06). These dry filters shall be in place and the exhaust fan operating at all times during this surface coating operation.

1.2 The maximum hourly stack emissions of particulate matter from the Small Valve Paint Booth stack (SV11) shall be limited to 0.006 pounds per hour.

1.3 All emissions from the Hydrant Production Paint Booth shall be vented through the dry filter assembly (CDV07). These dry filters shall be in place and the exhaust fan shall be operating at all times during this surface coating operation.

1.4 The maximum hourly stack emissions of particulate matter from the Hydrant Production Paint Booth stack (SV13) shall be limited to 0.022 pounds per hour.

§4-2; §4-57; §4-60

2.0 The volatile organic compound (VOC) content for all coatings used in valve and hydrant production shall not exceed 3.5 pounds per gallon of coating, less water and exempt solvents, as delivered to the applicator. A log shall be maintained containing the date and amount of coatings applied in these surface coating operations. *§4-2; §4-41, Rule 25.21; §4-57*

EMISSION UNIT 207 – RESILIENT SEAT VALVE PRODUCTION

Pangborn Rotoblast Cleaner (EV025)
Pangborn Airblast Cleaner (EV026)

1.0 The maximum emissions of particulate matter resulting from Resilient Seat Valve Production shall be limited to 0.99 pounds per hour and 4.34 tons per year. Compliance with this emission limitation shall be demonstrated by the following requirements.

2.0 The exhaust from the Pangborn Rotoblast Cleaner shall be vented through the RS Valve Cleaning baghouse (CDV08). This baghouse shall be in operation at all times during rotoblast cleaner operation except in accordance with Condition 13.0 of the Conditions of General Applicability. *§4-57*

3.0 The maximum allowable particulate emissions from the RS Valve Cleaning baghouse (CDV08) stack (SV14) shall be 0.219 pounds per hour based on a grain loading of 0.053 grains per dry standard cubic foot and the reported exhaust flow rate. This emission limitation has been determined to be Best Available Control Technology (BACT) by the Director, the Chattanooga-Hamilton County Air Pollution Control Bureau. *§4-8(e)(2); §4-57*

4.0 The maximum allowable particulate emissions from the Airblast baghouse (CDV10) stack (SV15) shall be 0.771 pounds per hour based on a grain-loading of 0.02 grains per dry standard cubic foot and the reported exhaust flow rate. *§4-41, Rule 26.12; §4-57*

EMISSION UNIT 208 – ANCILLARY VALVE & HYDRANT PLANT OPERATIONS

Lead Melting Kettles (EV031-EV032)
Resilient Seat Valve Burn-off Oven (EV033)
Hot Water Heaters No.1 & No.2 (EV034-EV035)
Special Coatings Paint Booth (EV036)
PCP Burn-off Oven No. 3 (EV049)

1.0 The maximum emissions of particulate matter from these ancillary operations shall be limited to 0.52 pounds per hour and 2.28 tons per year. Compliance with this emissions limitation shall be demonstrated by the following:

1.1 The maximum allowable emissions of particulate matter from lead kettle heating shall be 0.17 pounds per hour. Compliance with this emission limitation shall be demonstrated by burning only natural gas as fuel in the kettle burners. *§4-41, Rule 8.1*

1.2 Emissions of particulate matter from the Resilient Seat Valve Burn-off Oven stack (SV21) shall not exceed 0.345 pounds per hour. Compliance with this emission limitation shall be demonstrated by burning only natural gas as fuel in this oven. *§4-41, Rule 8.1*

1.3 Hourly emissions of particulate matter from the Special Coatings Paint Booth stack (SV24) shall not exceed 0.002 pounds per hour. Compliance with this emission limitation shall be met by the following:

1.3.1 All emissions from the Special Coatings Paint Booth shall be vented through the dry filter assembly (CDV12). These dry filters shall be in place and the exhaust fan operating at all times during booth operation.

1.3.2 Inspections and preventative maintenance of the booth and filters shall be conducted in accordance with U.S. Pipe and Foundry Company's maintenance plan described in Condition 2.0, Conditions Applicable to Entire Facility.

§4-2; §4-57; Part 70 Permit Application Request by Permittee

2.0 The maximum emissions of sulfur dioxide (SO_2) shall be limited to 0.001 pounds per hour and 0.004 tons per year. Compliance with this emissions limitation shall be demonstrated by burning only natural gas as fuel in these combustion sources. *§4-2; §4-57*

3.0 The maximum emissions of nitrogen oxides (NO_x) shall be limited to 0.124 pounds per hour and 0.543 tons per year. Compliance with this emissions limitation shall be demonstrated by burning only natural gas as fuel in these combustion sources. *§4-2; §4-57*

4.0 The volatile organic compound (VOC) content for all coatings used in the special coatings paint booth shall not exceed 3.5 pounds per gallon of coating, less water and exempt solvents, as delivered to the applicator. A log shall be maintained containing the date and amount of coatings applied in these surface coating operations. *§4-41, Rule 25.21; §4-57*

5.0 Fuel usage in PCP Burn-off Oven No. 3 shall be limited to natural gas. *§4-57*

6.0 Particulate matter emissions from PCP Burn-off Oven No. 3 shall not exceed 0.009 pounds per hour. This emissions limitation has been determined to be reasonable and proper by the Director. *§4-41, Rule 27*

7.0 Volatile organic compound emissions from PCP Burn-off Oven No. 3 shall be vented to and controlled by an afterburner that is an integral part of the oven. The afterburner shall be operated and maintained in accordance with the manufacturer's recommendations. The oven shall not be operated if its afterburner is not in operation. These requirements are best available control technology (BACT), as determined by the Director. *§4-41, Rule 25.3*

EMISSION UNIT 301 – SOLID WASTE LANDFILL

1.0 Visible emissions from material-handling operations at the solid waste landfill shall not exceed an opacity of ten percent for an aggregate of more than fifteen minutes in any one hour or more than sixty minutes in any twenty-four-hour period. *§4-41, Rule 26.11; §4-57*

2.0 Visible emissions, other than those from material handling operations shall not exceed an opacity of ten percent for an aggregate of more than five minutes in any one hour or more than twenty minutes in any twenty-four-hour period. *§4-41, Rule 3.1; §4-57*

PERMIT SHIELD

At the request of the responsible official who signed and certified to the Part 70 permit application, compliance with the conditions of this permit shall be deemed compliance with any "applicable requirements", as defined in §4-53 of the Chattanooga Air Pollution Control Ordinance, as of the date of permit issuance that are included and specifically identified in this permit. This permit shield does not apply to past applicability determinations made by the facility governing major new source review. No other requirements are identified as applicable as of the date of issuance of this permit to this permittee, but the Director reserves the right to reopen this permit pursuant to Condition 15.0 of the Conditions of General Applicability and to modify this permit pursuant to Condition 17.0 of the Conditions of General Applicability. This permit shield does not alter or affect the following:

(a) The provisions of Title 42 U.S.C. §7603 (emergency orders), including the authority of the Administrator or of the Chattanooga-Hamilton County Air Pollution Control Board or Bureau Director thereunder;

(b) The liability of a permittee of a source for any violation of applicable requirements prior to or at the time of permit issuance;

(c) The applicable requirements of the acid rain program promulgated under Title IV of the Clean Air Act consistent with Title 42 U.S.C. 7651g.(a);

(d) The ability of EPA to obtain information from a source pursuant to Title 42 U.S.C. §7414, or of the Board or Bureau Director to obtain information from a source pursuant to the Chattanooga Air Pollution Control Ordinance or any other provision of local, state or federal law; and *§4-57(f)*

(e) The right of any person to damages or other relief on account of injury to persons or property and to maintain any action or other appropriate proceeding therefor; nor does it abridge, limit, impair, create, enlarge or otherwise affect substantively or procedurally this right. *§4-5(1)*

FILE

UNITED STATES PIPE AND FOUNDRY COMPANY

Birmingham, Alabama
May 18, 1976

MEMORANDUM FOR RECORD

SUBJECT: PROJECT 7024 - CV&F NEW MELTING FACILITY

Copies to: Mr. J. C. Fay, Jr.
Mr. C. N. Codding
Mr. R. Hartman
Mr. J. W. Smallwood

Jim Smallwood, CV&F Plant Engineer and Ron Sanders and Don Wallace, G.O. Engineering, met with Mr. Bob Bond of the Chattanooga Air Pollution Control Bureau in Chattanooga on Wednesday and Thursday, May 12 and 13. The purpose of the meeting was to establish the baseline emission for the CV&F Plant pursuant to the proposed regulation on industrial expansion.

A tabulation of emissions from the permitted sources at the plant was discussed in a meeting on Thursday. It was learned at that time that in order to have all sources calculated on the same basis that emissions should be calculated on a 24 hours per day basis and for 365 days per year. The Bureau is aware that this calculation will give a higher number for baseline purposes than actual emissions but they prefer to be consistent in application of the proposed regulation.

Our emissions were recalculated on this basis on Wednesday afternoon and resubmitted to Mr. Bond on Thursday morning along with a tabulation of emissions representing our "trade off" with the new cupola included at 25 TPH, 24 hours per day. Mr. Bond had rechecked all of our sources and agreed with our totals. A copy of the attached tabulations were given to Mr. Bond with the understanding that we would document in a letter to Mr. Parr our baseline emission as well as our emission quantities after construction of the new cupola with our tradeoff actions included.

As can be seen from the tabulations, our operational emissions are well below the baseline emissions. Trade off reductions were accomplished by installation of a baghouse on item 29, Shell Sand Coating. This baghouse was installed approximately two years ago but by taking advantage of the definition of "baseline emissions" we can get credit for these reductions. Similar reductions are claimed for item 37, No. 9 Unit which had been exhausted to a Schneible scrubber. A portion of these emissions will be collected in the existing ductile iron baghouse. Resulting emissions, after construction of the new cupola system, are shown on the attached tabulation.

MEMORANDUM FOR RECORD

SUBJECT: PROJECT 7024 - CV&F NEW MELTING FACILITY
May 18,1976
Page 2

No word has yet been received from EPA in Atlanta on the permit, but the Bureau still feels that a trade off will be required and that the above approach will be acceptable.

A public hearing on our permit applications remains a real possibility as an EPA requirement and would delay permit approval a minimum of an additional six weeks.

D. C. Wallace

D. C. Wallace

EMISSION UNIT 208 – ANCILLARY VALVE & HYDRANT PLANT OPERATIONS

Lead Melting Kettles (EV031-EV032)
Resilient Seat Valve Burn-off Oven (EV033)
Hot Water Heaters No.1 & No.2 (EV034-EV035)
Special Coatings Paint Booth (EV036)

1.0 The maximum emissions of particulate matter from these ancillary operations shall be limited to 0.52 pounds per hour and 2.28 tons per year. Compliance with this emissions limitation shall be demonstrated by the following:

1.1 The maximum allowable emissions of particulate matter from lead kettle heating shall be 0.17 pounds per hour. Compliance with this emission limitation shall be demonstrated by burning only natural gas as fuel in the kettle burners. *§4-41, Rule 8.1*

1.2 Emissions of particulate matter from the Resilient Seat Valve Burn-off Oven stack (SV21) shall not exceed 0.345 pounds per hour. Compliance with this emission limitation shall be demonstrated by burning only natural gas as fuel in this oven. *§4-41, Rule 8.1*

1.3 Hourly emissions of particulate matter from the Special Coatings Paint Booth stack (SV24) shall not exceed 0.002 pounds per hour. Compliance with this emission limitation shall be met by the following:

1.3.1 All emissions from the Special Coatings Paint Booth shall be vented through the dry filter assembly (CDV12). These dry filters shall be in place and the exhaust fan operating at all times during booth operation.

1.3.2 Inspections and preventative maintenance of the booth and filters shall be conducted in accordance with U.S. Pipe and Foundry Company's maintenance plan described in Condition 2.0, Conditions Applicable to Entire Facility.

§4-2; §4-57; Part 70 Permit Application Request by Permittee

2.0 The maximum emissions of sulfur dioxide (SO_2) shall be limited to 0.001 pounds per hour and 0.004 tons per year. Compliance with this emissions limitation shall be demonstrated by burning only natural gas as fuel in these combustion sources. *§4-2; §4-57*

3.0 The maximum emissions of nitrogen oxides (NO_x) shall be limited to 0.124 pounds per hour and 0.543 tons per year. Compliance with this emissions limitation shall be demonstrated by burning only natural gas as fuel in these combustion sources. *§4-2; §4-57*

4.0 The volatile organic compound (VOC) content for all coatings used in the special coatings paint booth shall not exceed 3.5 pounds per gallon of coating, less water and exempt

solvents, as delivered to the applicator. A log shall be maintained containing the date and amount of coatings applied in these surface coating operations. *§4-41, Rule 25.21; §4-57*

EMISSION UNIT 128 – FUSION BONDED EPOXY PROCESS

GLA Burn-off Oven with Afterburner (E123)
FBE Rotoblast Barrels (E134, E135, E136)

1.0 The maximum emissions of particulate matter from the FBE Rotoblast Barrels (E134, E135, E136) operation shall be limited to 2.45 pounds per hour and 10.73 tons per year. All captured emissions from the FBE Rotoblast Barrels (E134, E135, E136) shall be vented through the FBE Rotoblast Barrels baghouse (CD048). This baghouse shall be in operation at all times during rotoblast table cleaner operation except in accordance with Condition 13.0 of the Conditions of General Applicability. *§4-2; §4-41, Rule 27.3; §4-57; §4-60*

2.0 The maximum emissions of particulate matter from the GLA Burn-off Oven (E123) shall be limited to 0.10 pounds per hour and 0.438 tons per year. Compliance with this emission limitation shall be demonstrated by burning only natural gas as fuel in this equipment. This condition has been determined to be reasonable and proper control by the Director, the Chattanooga-Hamilton County Air Pollution Control Bureau. *§4-2; §4-41, Rule 27.3; §4-57*

3.0 The maximum emissions of nitrogen oxides (NO_x) from the GLA Burn-off Oven and afterburner shall be limited to 0.60 pounds per hour and 2.63 tons per year. Compliance with this emission limitation shall be demonstrated by burning only natural gas as fuel in this equipment. *§4-41, Rule 2; §4-57*

4.0 The maximum emissions of sulfur dioxide (SO_2) from the GLA Burn-off Oven and afterburner shall be limited to 0.001 pound per hour and 0.0044 tons per year. Compliance with this emission limitation shall be demonstrated by burning only natural gas as fuel in this equipment. *§4-2; §4-57*

5.0 The maximum emissions of volatile organic compounds (VOC) from the GLA Burn-off Oven and afterburner shall be limited to 0.01 pounds per hour and 0.044 tons per year. Compliance with this emission limitation shall be demonstrated by the following:

5.1 Only natural gas shall be burned as fuel in this equipment. This condition has been determined to be Best Available Control Technology (BACT) by the Director, the Chattanooga-Hamilton County Air Pollution Control Bureau. *§4-41, Rule 25.3; §4-57*

5.2 All emissions resulting from the pyrolysis of epoxy coatings shall be vented through the GLA afterburner. This afterburner shall be in operation at all times during GLA oven operations. This condition has been determined to be reasonable and proper control by the Director, the Chattanooga-Hamilton County Air Pollution Control Bureau. *§4-41, Rule 23*

TABLE OF CONTENTS

Subject **Page**

Emission Unit Summary 2

Conditions of General Applicability to
All Part 70 Sources 4

Conditions Applicable to the Entire Facility 16

Emission Unit Special Conditions 22

Permit Shield 57

The emissions units regulated by this permit are the following:

Emission Unit	Description
101	Charge Handling
102	Melting Facility
103	Hot Metal Transfer
104	Desulfurization & Slagging
105	Induction Holding Furnaces
106	Ductile Treating Process
107	No. 9 Unit Inoculation & Slagging
108	No. 10 Unit Inoculation & Slagging
109	Fitting Plant Pouring & Cooling
110	No.9 Unit Shakeout
111	No.10 Unit Shakeout
112	No. 9 Unit Casting Cleaning
113	No.10 Unit Casting Cleaning

EMISSION UNIT 208 – ANCILLARY VALVE & HYDRANT PLANT OPERATIONS

Lead Melting Kettles (EV031-EV032)
Resilient Seat Valve Burn-off Oven (EV033)
Hot Water Heaters No.1 & No.2 (EV034-EV035)
Special Coatings Paint Booth (EV036)

1.0 The maximum emissions of particulate matter from these ancillary operations shall be limited to 0.52 pounds per hour and 2.28 tons per year. Compliance with this emissions limitation shall be demonstrated by the following:

1.1 The maximum allowable emissions of particulate matter from lead kettle heating shall be 0.17 pounds per hour. Compliance with this emission limitation shall be demonstrated by burning only natural gas as fuel in the kettle burners. *§4-41, Rule 8.1*

1.2 Emissions of particulate matter from the Resilient Seat Valve Burn-off Oven stack (SV21) shall not exceed 0.345 pounds per hour. Compliance with this emission limitation shall be demonstrated by burning only natural gas as fuel in this oven. *§4-41, Rule 8.1*

1.3 Hourly emissions of particulate matter from the Special Coatings Paint Booth stack (SV24) shall not exceed 0.002 pounds per hour. Compliance with this emission limitation shall be met by the following:

1.3.1 All emissions from the Special Coatings Paint Booth shall be vented through the dry filter assembly (CDV12). These dry filters shall be in place and the exhaust fan operating at all times during booth operation.

1.3.2 Inspections and preventative maintenance of the booth and filters shall be conducted in accordance with U.S. Pipe and Foundry Company's maintenance plan described in Condition 2.0, Conditions Applicable to Entire Facility.

§4-2; §4-57; Part 70 Permit Application Request by Permittee

2.0 The maximum emissions of sulfur dioxide (SO_2) shall be limited to 0.001 pounds per hour and 0.004 tons per year. Compliance with this emissions limitation shall be demonstrated by burning only natural gas as fuel in these combustion sources. *§4-2; §4-57*

3.0 The maximum emissions of nitrogen oxides (NO_x) shall be limited to 0.124 pounds per hour and 0.543 tons per year. Compliance with this emissions limitation shall be demonstrated by burning only natural gas as fuel in these combustion sources. *§4-2; §4-57*

4.0 The volatile organic compound (VOC) content for all coatings used in the special coatings paint booth shall not exceed 3.5 pounds per gallon of coating, less water and exempt

solvents, as delivered to the applicator. A log shall be maintained containing the date and amount of coatings applied in these surface coating operations. *§4-41, Rule 25.21; §4-57*

EMISSION UNIT 128 – FUSION BONDED EPOXY PROCESS

GLA Burn-off Oven with Afterburner (E123)
FBE Rotoblast Barrels (E134, E135, E136)

1.0 The maximum emissions of particulate matter from the FBE Rotoblast Barrels (E134, E135, E136) operation shall be limited to 2.45 pounds per hour and 10.73 tons per year. All captured emissions from the FBE Rotoblast Barrels (E134, E135, E136) shall be vented through the FBE Rotoblast Barrels baghouse (CD048). This baghouse shall be in operation at all times during rotoblast table cleaner operation except in accordance with Condition 13.0 of the Conditions of General Applicability. *§4-2; §4-41, Rule 27.3; §4-57; §4-60*

2.0 The maximum emissions of particulate matter from the GLA Burn-off Oven (E123) shall be limited to 0.10 pounds per hour and 0.438 tons per year. Compliance with this emission limitation shall be demonstrated by burning only natural gas as fuel in this equipment. This condition has been determined to be reasonable and proper control by the Director, the Chattanooga-Hamilton County Air Pollution Control Bureau. *§4-2; §4-41, Rule 27.3; §4-57*

3.0 The maximum emissions of nitrogen oxides (NO_x) from the GLA Burn-off Oven and afterburner shall be limited to 0.60 pounds per hour and 2.63 tons per year. Compliance with this emission limitation shall be demonstrated by burning only natural gas as fuel in this equipment. *§4-41, Rule 2; §4-57*

4.0 The maximum emissions of sulfur dioxide (SO_2) from the GLA Burn-off Oven and afterburner shall be limited to 0.001 pound per hour and 0.0044 tons per year. Compliance with this emission limitation shall be demonstrated by burning only natural gas as fuel in this equipment. *§4-2; §4-57*

5.0 The maximum emissions of volatile organic compounds (VOC) from the GLA Burn-off Oven and afterburner shall be limited to 0.01 pounds per hour and 0.044 tons per year. Compliance with this emission limitation shall be demonstrated by the following:

5.1 Only natural gas shall be burned as fuel in this equipment. This condition has been determined to be Best Available Control Technology (BACT) by the Director, the Chattanooga-Hamilton County Air Pollution Control Bureau. *§4-41, Rule 25.3; §4-57*

5.2 All emissions resulting from the pyrolysis of epoxy coatings shall be vented through the GLA afterburner. This afterburner shall be in operation at all times during GLA oven operations. This condition has been determined to be reasonable and proper control by the Director, the Chattanooga-Hamilton County Air Pollution Control Bureau. *§4-41, Rule 23*

TABLE OF CONTENTS

Subject **Page**

Emission Unit Summary 2

Conditions of General Applicability to
All Part 70 Sources 4

Conditions Applicable to the Entire Facility 16

Emission Unit Special Conditions 22

Permit Shield 57

The emissions units regulated by this permit are the following:

Emission Unit	Description
101	Charge Handling
102	Melting Facility
103	Hot Metal Transfer
104	Desulfurization & Slagging
105	Induction Holding Furnaces
106	Ductile Treating Process
107	No. 9 Unit Inoculation & Slagging
108	No. 10 Unit Inoculation & Slagging
109	Fitting Plant Pouring & Cooling
110	No.9 Unit Shakeout
111	No.10 Unit Shakeout
112	No. 9 Unit Casting Cleaning
113	No.10 Unit Casting Cleaning

BASELINE EMISSIONS

Chattanooga Valve & Fittings Emissions Rate

	Permit No.	Name	Emission Rate (lb./hour)
1.	31230007	(4) Pedestal Grinders	0.1
2.	31230009	Pangborn Rotoblast Barrels	0.4
3.	31230025	Binks Water Wash Spray Booth	
4.	31230026	Binks Water Wash Spray Booth	
5.	31230027	Binks Water Wash Spray Booth	
6.		Pangborn Rotoblast (8', 10') Tables	1.7
7.		Brass-Bronze Melting & Green Sand Molding	0.1
8.	31230017	Lead Melting Furnace	0.1
9.	31230018	Core Oven Steiner-Ives	0.1
10.	31230020	Rover Green Sand System	0.1
11.	31230010	Abrasive Sand Blast	5.4
12.	31230011	Shell Molding Machine	0.3
13.	31230015	Shell Sand Mold Pouring	1.3
14.	31430309	Swing Grinders #2 Shed	0.3
15.	31430311	Carpenter Shop	0.8
16.	31430313	Pattern Shop	0.2
17.	31430315	(2) Coleman Transtrack Core Ovens	0.7
18.	31430303	12' Rotoblast	1.3
19.	31430305	(4) Grinding Booth #2 Shed	0.6
20.	31430307	(2) Grinding Booth	0.3
21.	31430316	(2) Coleman Transtrack Core Ovens	0.7
22.	31430321	(2) Swing Frame Grinder #1 Shed	0.1
23.	31430319	Cleaning System "A"	0.3
24.	31430323	Cleaning System "B"	0.3

Chattanooga Valve & Fittings Emissions Rate
page 2

	Permit No.	Name	Emission Rate (lb./hour)
25.	31430325	Cleaning System "C"	0.4
26.	31430327	Cleaning System "D"	0.4
27.	31430329	(3) Rotoblast Barrels Type GN	1.7
28.	31430334	No. 4 Unit	13.2
29.	31430335	Shell Sand Coating	6.5
30.	31430336	Binks Water Wash Spray Booth	
31.	31430337	Booth Pneu. Sand Trans. System	1.0
32.	31430338	Aerodyne Sand Transp. #1	0.8
33.	31430339	Binks Water Wash Spray Booth	
34.	31430340	Binks Water Wash Spray Booth	
35.	31430341	Aerodyne Sand Transp. #2	1.0
36.		Ductile Iron Treat. & Desulfurization	0.9
37.		No. 9 Unit	23.9
			65.0

Base line emission (Tons/year) 65.0 x 24 x 365 ÷ 2000 = 284.7

Chattanooga Valve & Fittings Emissions Rate

	Permit No.	Name	Emission Rate (lb./day)	
1.	31230007	(4) Pedestal Grinders	.8	0.1
2.	31230009	Pangborn Rotoblast Barrels	3.2	0.4
3.	31230025	Binks Water Wash Spray Booth		
4.	31230026	Binks Water Wash Spray Booth		
5.	31230027	Binks Water Wash Spray Booth		
6.		Pangborn Rotoblast (8', 10') Tables	27.2	1.7
7.		Brass-Bronze Melting & Green Sand Molding	.8	0.1
8.	31230017	Lead Melting Furnace	.8	0.1
9.	31230018	Core Oven Steiner-Ives	.6	0.1
10.	31230020	Rover Green Sand System	.8	0.1
11.	31230010	Abrasive Sand Blast	16.2	5.4
12.	31230011	Shell Molding Machine	4.8	0.3
13.	31230015	Shell Sand Mold Pouring	10.4	1.3
14.	31430309	Swing Grinders #2 Shed	4.8	0.3
15.	31430311	Carpenter Shop	9.6	0.8
16.	31430313	Pattern Shop	2.4	0.2
17.	31430315	(2) Coleman Transtrack Core Ovens	12.6	0.7
18.	31430303	12' Rotoblast	20.8	1.3
19.	31430305	(4) Grinding Booth #2 Shed	9.6	0.6
20.	31430307	(2) Grinding Booth	6.4	0.4
21.	31430316	(2) Coleman Transtrack Core Ovens	12.6	0.7
22.	31430321	(2) Swing Frame Grinder #1 Shed	1.6	0.1
23.	31430319	Cleaning System "A"	4.8	0.3
24.	31430323	Cleaning System "B"	4.8	0.3

Chattanooga Valve & Fittings Emissions Rate

page 2

	Permit No.	Name	Emission Rate (lb./day)		
25.	31430325	Cleaning System "C"	6.4	0.4	
26.	31430327	Cleaning System "D"	6.4	0.4	
27.	31430329	(3) Rotoblast Barrels Type GN	27.2	1.7	
28.	31430334	No. 4 Unit	211.2	13.2	
29.	31430335	Shell Sand Coating (Up to May 16, 1974. 6.48 lb/hr × 16 hr/day)	103.7 ~~1.6~~	16.5	0.1
30.	31430336	Binks Water Wash Spray Booth			
31.	31430337	Booth Pneu. Sand Trans. System	16	1.0	
32.	31430338	Aerodyne Sand Transp. #1	12.8	0.8	
33.	31430339	Binks Water Wash Spray Booth			
34.	31430340	Binks Water Wash Spray Booth			
35.	31430341	Aerodyne Sand Transp. #2	16	1.0	
36.		Ductile Iron Treat. & Desulfurization	14.4	0.9	
37.		No. 9 Unit	479	23.9	2.5
		Bo	946.6 − 1.6 = 945.0	65.1 lb/hr = 1562.4 lb/day	
			+ 103.7 = 1048.7 lb/day		

23.9
4.8
19.1
39.6
58.7
6.4
65.1

3.4 Annual compliance certifications shall be submitted by May 8 of each year throughout the term of this permit. Separate compliance certifications shall be submitted to:

Chattanooga-Hamilton County Air Pollution Control Bureau
Development Resource Center
1250 Market Street, Suite 3020
Chattanooga, TN 37402-4443

and to:

U.S. EPA Region 4
Air Enforcement Section
Sam Nunn Atlanta Federal Center
61 Forsyth Street SW
Atlanta, GA 30303-8960

Each such compliance certification shall include the following information (provided that the identification of applicable information may cross-reference the permit or previous reports as applicable):

3.4.1 Identification of each term or condition of the permit that is the basis of the certification;

3.4.2 Compliance status;

3.4.3 Whether compliance was continuous or intermittent;

3.4.4 The method(s) used for determining the compliance status of the source, currently and over the reporting period consistent with §4-57(a)(3);

3.4.5 Where any specific test method requires quality assurance audit samples and the audit result does not validate the source's sample within the specified parameters, the source must retest the stack test until such time as the audit result does validate the sample within the specified parameters; except that the Bureau Director may waive retesting if the source's stack test sample is in compliance with this permit even if not validated within the specified quality assurance parameters; *§4-3(d)*

3.4.6 Such other facts as the Board or the Bureau Director may require to determine the compliance status of the Part 70 source; and *§4-57(c)(5)(iii)(E)*

3.4.7 Such additional requirements as may be required for enhanced monitoring compliance certification under Title 42 U.S.C. §7414(a)(3) and §7661c(b)

CONDITIONS APPLICABLE TO THE ENTIRE FACILITY

1.0 Semiannual Compliance Monitoring Reports. In addition to reports that are required by the Conditions of General Applicability, a semiannual compliance monitoring report shall be submitted by May 8 and November 8 of each year throughout the term of this permit. The compliance monitoring reports shall be submitted to:

Chattanooga-Hamilton County Air Pollution Control Bureau
Development Resource Center
1250 Market Street, Suite 3020
Chattanooga, TN 37402-4443

1.1 Each compliance monitoring report shall include a detailed summary report of deviations from permit requirements for the previous six-month period indicating every instance in which an emission unit was operated outside of required parameters or was operated while air pollution control equipment that was required to be used was not in operation, bypassed, or operated outside of required parameters. For each such incident, the nature and cause of the incident, affected equipment, calendar date, beginning time, elapsed time, value of any operating parameter that was not met, and estimated resulting emissions shall be included in the report.

1.2 In addition, each compliance semiannual compliance monitoring report shall include the following information for the previous twelve months:

1.2.1 Total quantity and VOC content of each VOC-containing coating
1.2.2 Total usage and VOC content of each sand core and/or mold resin component
1.2.3 Total quantity and sulfur content of coke used at the melting facility
1.2.4 Total operating hours of the No.9 Unit Sand Screening Drum (E023)
1.2.5 Total quantity of triethylamine
1.2.6 Total quantity and VOC content of each VOC-containing refractory coating
1.2.7 Total quantity of iron poured at the facility
1.2.8 Total quantity of iron poured on No. 10 Unit

§4-57(a)(3)(iii)(B)

2.0 Maintenance Plan.

2.1 United States Pipe and Foundry Company, Inc. shall implement and maintain a preventative maintenance plan for all major air pollution control equipment. At a minimum, the plan shall include the manufacturer's recommendations and recordkeeping of periodic and/or scheduled maintenance activities for the purposes of complying with the plan. The plan shall be updated as necessary, maintained on site, and be available for inspection by Bureau representative upon request during normal

EMISSION UNIT 125 – REFRACTORY COATING OPERATIONS

Refractory Coating (E072)
Flame-off (E081)

1.0 The maximum emissions of particulate matter resulting from Refractory Coating Flame-off operations (E081) shall be limited to 0.0003 pounds per hour and 0.002 tons per year. Compliance with this emissions limitation shall be demonstrated by burning only natural gas as fuel in the flame-off burner. *§4-2; §4-57; §4-60*

2.0 The maximum emissions of sulfur dioxide (SO_2) resulting from Refractory Coating Flame-off operations (E081) shall be limited to 0.0003 pounds per hour and 0.002 tons per year. Compliance with this emissions limitation shall be demonstrated by burning only natural gas as fuel in the flame-off burner. *§4-2; §4-57; §4-60*

3.0 The maximum emissions of nitrogen oxides (NO_x) resulting from Refractory Coating Flame-off operations (E081) shall be limited to 0.057 pounds per hour and 0.248 tons per year. Compliance with this emissions limitation shall be demonstrated by burning only natural gas as fuel in the flame-off burner. *§4-2; §4-57; §4-60*

4.0 The maximum allowable emissions of volatile organic compounds (VOC) resulting from Refractory Coating operations (E072) shall be 24.74 pounds per hour and 49.49 tons per rolling twelve months. Compliance with this emission limitation shall be demonstrated by multiplying the amount of isopropanol used in the Refractory Coating operation by the emission factor of 2,000 pounds of VOC per ton of isopropanol less 50 percent control efficiency for mold cores subject to the flame-off process. *§4-41, Rule 25; §4-57*

TRADE OFF EMISSIONS

Chattanooga Valve & Fittings Emissions Rate

	Permit No.	Name	Emission Rate (lb./hour)
1.	31230007	(4) Pedestal Grinders	0.1
2.	31230009	Pangborn Rotoblast Barrels	0.4
3.	31230025	Binks Water Wash Spray Booth	
4.	31230026	Binks Water Wash Spray Booth	
5.	31230027	Binks Water Wash Spray Booth	
6.		Pangborn Rotoblast (8', 10') Tables	1.7
7.		Brass-Bronze Melting & Green Sand Molding	0.1
8.	31230017	Lead Melting Furnace	0.1
9.	31230018	Core Oven Steiner-Ives	0.1
10.	31230020	Rover Green Sand System	0.1
11.	31230010	Abrasive Sand Blast	5.4
12.	31230011	Shell Molding Machine	0.3
13.	31230015	Shell Sand Mold Pouring	1.3
14.	31430309	Swing Grinders #2 Shed	0.3
15.	31430311	Carpenter Shop	0.8
16.	31430313	Pattern Shop	0.2
17.	31430315	(2) Coleman Transtrack Core Ovens	0.7
18.	31430303	12' Rotoblast	1.3
19.	31430305	(4) Grinding Booth #2 Shed	0.6
20.	31430307	(2) Grinding Booth	0.3
21.	31430316	(2) Coleman Transtrack Core Ovens	0.7
22.	31430321	(2) Swing Frame Grinder #1 Shed	0.1
23.	31430319	Cleaning System "A"	0.3
24.	31430323	Cleaning System "B"	0.3

Chattanooga Valve & Fittings Emissions Rate

page 2

	Permit No.	Name	Emission Rate (lb./hour)
25.	31430325	Cleaning System "C"	0.4
26.	31430327	Cleaning System "D"	0.4
27.	31430329	(3) Rotoblast Barrels Type GN	1.7
28.	31430334	No. 4 Unit	13.2
29.	31430335	Shell Sand Coating	0.1
30.	31430336	Binks Water Wash Spray Booth	
31.	31430337	Booth Pneu. Sand Trans. System	1.0
32.	31430338	Aerodyne Sand Transp. #1	0.8
33.	31430339	Binks Water Wash Spray Booth	
34.	31430340	Binks Water Wash Spray Booth	
35.	31430341	Aerodyne Sand Transp. #2	1.0
36.		Ductile Iron Treat. & Desulfurization	0.9
37.		No. 9 Unit	2.5
38.		Cupola	4.3
			41.5

Base line emission (Tons/year) 65.0 x 24 x 365 ÷ 2000 = 284.7

Operational emission (Tons/year) 41.5 x 24 x 365 ÷ 2000 = 181.8

Chattanooga Valve & Fittings Emissions Rate

	Permit No.	Name
1.	31230007	(4) Pedestal Grinders
2.	31230009	Pangborn Rotoblast Barrels
3.	31230025	Binks Water Wash Spray Booth
4.	31230026	Binks Water Wash Spray Booth
5.	31230027	Binks Water Wash Spray Booth
6.		Pangborn Rotoblast (8', 10') Tables
7.		Brass-Bronze Melting & Green Sand Molding
8.	31230017	Lead Melting Furnace
9.	31230018	Core Oven Steiner-Ives
10.	31230020	Rover Green Sand System
11.	31230010	Abrasive Sand Blast
12.	31230011	Shell Molding Machine
13.	31230015	Shell Sand Mold Pouring
14.	31430309	Swing Grinders #2 Shed
15.	31430311	Carpenter Shop
16.	31430313	Pattern Shop
17.	31430315	(2) Coleman Transtrack Core Ovens
18.	31430303	12' Rotoblast
19.	31430305	(4) Grinding Booth #2 Shed
20.	31430307	(2) Grinding Booth
21.	31430316	(2) Coleman Transtrack Core Ovens
22.	31430321	(2) Swing Frame Grinder #1 Shed
23.	31430319	Cleaning System "A"
24.	31430323	Cleaning System "B"

Chattanooga Valve & Fittings Emissions Rate
page 2

	Permit No.	Name
25.	31430325	Cleaning System "C"
26.	31430327	Cleaning System "D"
27.	31430329	(3) Rotoblast Barrels Type GN
28.	31430334	No. 4 Unit
29.	31430335	Shell Sand Coating
30.	31430336	Binks Water Wash Spray Booth
31.	31430337	Booth Pneu. Sand Trans. System
32.	31430338	Aerodyne Sand Transp. #1
33.	31430339	Binks Water Wash Spray Booth
34.	31430340	Binks Water Wash Spray Booth
35.	31430341	Aerodyne Sand Transp. #2
36.		Ductile Iron Treat. & Desulfurization
37.		No. 9 Unit

DRAFT

Mr. Herb Parr
Chattanooga Air Pollution Control Bureau

Attached is a tabulation showing baseline emissions for the Chattanooga Valve & Fittings Plant located at 2701 Chestnut Street. A tabulation of emissions after construction of the proposed cupola system is also attached, showing a net reduction of 36 percent of total emissions from the facility.

These reductions will be accomplished through use of more efficient control equipment serving two existing sources and by installation of the best available control system for the proposed cupola.

These tabulations have been discussed with Mr. Bob Bond of your staff, and were completed in accordance with procedures consistant with the proposed revision to the Chattanooga-Hamilton County Air Pollution Control Ordinance.

We sincerely appreciate your cooperation and that of Mr. Bond in regard to our permit applications and if there is any additional information we can supply, we will be happy to do so.

BASELINE EMISSIONS

Chattanooga Valve & Fittings Emissions Rate

	Permit No.	Name	Emission Rate (lb./hour)
1.	31230007	(4) Pedestal Grinders	0.1
2.	31230009	Pangborn Rotoblast Barrels	0.4
3.	31230025	Binks Water Wash Spray Booth	
4.	31230026	Binks Water Wash Spray Booth	
5.	31230027	Binks Water Wash Spray Booth	
6.		Pangborn Rotoblast (8', 10') Tables	1.7
7.		Brass-Bronze Melting & Green Sand Molding	0.1
8.	31230017	Lead Melting Furnace	0.1
9.	31230018	Core Oven Steiner-Ives	0.1
10.	31230020	Rover Green Sand System	0.1
11.	31230010	Abrasive Sand Blast	5.4
12.	31230011	Shell Molding Machine	0.3
13.	31230015	Shell Sand Mold Pouring	1.3
14.	31430309	Swing Grinders #2 Shed	0.3
15.	31430311	Carpenter Shop	0.8
16.	31430313	Pattern Shop	0.2
17.	31430315	(2) Coleman Transtrack Core Ovens	0.7
18.	31430303	12' Rotoblast	1.3
19.	31430305	(4) Grinding Booth #2 Shed	0.6
20.	31430307	(2) Grinding Booth	0.3
21.	31430316	(2) Coleman Transtrack Core Ovens	0.7
22.	31430321	(2) Swing Frame Grinder #1 Shed	0.1
23.	31430319	Cleaning System "A"	0.3
24.	31430323	Cleaning System "B"	0.3

Chattanooga Valve & Fittings Emissions Rate

page 2

	Permit No.	Name	Emission Rate (lb./hour)
25.	31430325	Cleaning System "C"	0.4
26.	31430327	Cleaning System "D"	0.4
27.	31430329	(3) Rotoblast Barrels Type GN	1.7
28.	31430334	No. 4 Unit	13.2
29.	31430335	Shell Sand Coating	6.5
30.	31430336	Binks Water Wash Spray Booth	
31.	31430337	Booth Pneu. Sand Trans. System	1.0
32.	31430338	Aerodyne Sand Transp. #1	0.8
33.	31430339	Binks Water Wash Spray Booth	
34.	31430340	Binks Water Wash Spray Booth	
35.	31430341	Aerodyne Sand Transp. #2	1.0
36.		Ductile Iron Treat. & Desulfurization	0.9
37.		No. 9 Unit	23.9
			65.0

Base line emission (Tons/year) 65.0 x 24 x 365 ÷ 2000 = 284.7

TRADE OFF EMISSIONS

Chattanooga Valve & Fittings Emissions Rate

	Permit No.	Name	Emission Rate (lb./hour)
1.	31230007	(4) Pedestal Grinders	0.1
2.	31230009	Pangborn Rotoblast Barrels	0.4
3.	31230025	Binks Water Wash Spray Booth	
4.	31230026	Binks Water Wash Spray Booth	
5.	31230027	Binks Water Wash Spray Booth	
6.		Pangborn Rotoblast (8', 10') Tables	1.7
7.		Brass-Bronze Melting & Green Sand Molding	0.1
8.	31230017	Lead Melting Furnace	0.1
9.	31230018	Core Oven Steiner-Ives	0.1
10.	31230020	Rover Green Sand System	0.1
11.	31230010	Abrasive Sand Blast	5.4
12.	31230011	Shell Molding Machine	0.3
13.	31230015	Shell Sand Mold Pouring	1.3
14.	31430309	Swing Grinders #2 Shed	0.3
15.	31430311	Carpenter Shop	0.8
16.	31430313	Pattern Shop	0.2
17.	31430315	(2) Coleman Transtrack Core Ovens	0.7
18.	31430303	12' Rotoblast	1.3
19.	31430305	(4) Grinding Booth #2 Shed	0.6
20.	31430307	(2) Grinding Booth	0.3
21.	31430316	(2) Coleman Transtrack Core Ovens	0.7
22.	31430321	(2) Swing Frame Grinder #1 Shed	0.1
23.	31430319	Cleaning System "A"	0.3
24.	31430323	Cleaning System "B"	0.3

Chattanooga Valve & Fittings Emissions Rate

page 2

	Permit No.	Name	Emission Rate (lb./hour)
25.	31430325	Cleaning System "C"	0.4
26.	31430327	Cleaning System "D"	0.4
27.	31430329	(3) Rotoblast Barrels Type GN	1.7
28.	31430334	No. 4 Unit	13.2
29.	31430335	Shell Sand Coating	0.1
30.	31430336	Binks Water Wash Spray Booth	
31.	31430337	Booth Pneu. Sand Trans. System	1.0
32.	31430338	Aerodyne Sand Transp. #1	0.8
33.	31430339	Binks Water Wash Spray Booth	
34.	31430340	Binks Water Wash Spray Booth	
35.	31430341	Aerodyne Sand Transp. #2	1.0
36.		Ductile Iron Treat. & Desulfurization	0.9
37.		No. 9 Unit	2.5
38.		Cupola	4.3
			41.5

Base line emission (Tons/year) 65.0 x 24 x 365 ÷ 2000 = 284.7

Operational emission (Tons/year) 41.5 x 24 x 365 ÷ 2000 = 181.8

SYSTEMS ANALYSIS OF EMISSIONS
AND EMISSIONS CONTROL IN THE
IRON FOUNDRY INDUSTRY

VOLUME I TEXT
FEBRUARY, 1971

For

Division of Process Control Engineering
Air Pollution Control Office
Environmental Protection Agency
Contract No. CPA 22-69-106

Prepared by
A. T. Kearney & Company, Inc.
Chicago, Illinois

A. T. KEARNEY & COMPANY, INC.

MWPS012098

BIBLIOGRAPHIC DATA SHEET	1. Report No. APTD-0644	2.	3. Recipient's Accession No.
4. Title and Subtitle: Systems Analysis of Emissions and Emissions Control in the Iron Foundry Industry Volume I - Text			5. Report Date: February 1971
			6.
7. Author(s)			8. Performing Organization Rept. No.
9. Performing Organization Name and Address: A. T. Kearney & Company, Inc. 100 South Wacker Drive Chicago, Illinois 60606			10. Project/Task/Work Unit No.
			11. Contract/Grant No. CPA 22-69-106
12. Sponsoring Organization Name and Address: EPA, Air Pollution Control Office Technical Center, Box 12055 Research Triangle Park, N. C. 27709			13. Type of Report & Period Covered
			14.

15. Supplementary Notes

16. Abstracts

~~This volume~~ presents the text of a study which attempts to define the air pollution problems of the iron foundry industry and to set priorities for research and development activities that will lead to improved emission control capabilities at reduced cost. The following areas are covered extensively: foundry emissions produced and control capability thereof; the quantification and evaluation of emissions; technical and economic analysis of emission control technology; technical and economic analysis of potential modifications to foundry processes and equipment; projection of trends; and recommended research and development. Volume II of this study contains exhibits and volume III consists of six appendices.

17. Key Words and Document Analysis. 17a. Descriptors

Foundries
Airborne wastes
Air pollution control equipment
Cost analysis
Foundry core making
Foundry sands
Molding materials
casting
Melting

17b. Identifiers/Open-Ended Terms

17c. COSATI Field/Group 13/B

18. Availability Statement	19. Security Class (This Report)	21. No. of Pages
Unlimited	UNCLASSIFIED	368
	20. Security Class (This Page) UNCLASSIFIED	22. Price $6.00

EXHIBIT VI-19

MAGNESIUM TREATMENT SYSTEMS EMISSIONS REPORT FOR
DUCTILE IRON PRODUCTION AND GRAY IRON DESULFURIZATION

Iron Treated - 30 Tons per Hour
Inoculant Added - 20-22 Pounds per Ton Iron
Inoculants Used - Soda Ash; MgFeSi-(10% Mg) 75% Fe
Emissions Produced - 100 Pounds per Hour
3.3 Pounds per Ton Iron
Emissions Analysis - 32% MgO
18.7% Fe_2O_3
9.5% CO_2
4.2% SiO_2
2.5% S
1.1% C
0.6% CaO
Balance Na_2O

Source: Foundry Visitations, Foundry Number 0150.

Proj. 7024 – Chatt UFF

– Base line to be based on 24 hr/day, 365 day/yr operation for all sources. This same use base ~~[illegible]~~ applies to all new or modified sources when determining trade-off.

– For permit ~~[illegible]~~ form ~~[illegible]~~, should reflect actual operating schedule.

– We will submit a letter stating our base line and trade-off position.

5/13/76

3/

698

Permitted Sources - Chattanooga Plants

Emissions Trade-off Evaluation

	Permit No.	Name	Emission Rate (lb./day)	Controlled	"Trade-Off" Source Emission Rate (lb./day)	Type Control	Control Efficiency % Exist.	Control Efficiency % Modified	Net "Trade-Off" Emissions Reduction (lb./)
I. Soil Pipe									
1.	31430402	Short Run Fittings Shot Blast	31.2	yes	31.2	Wet Scrubber	95		
2.	31430404	Mechanized Fittings Shot Blast	105.6	yes	105.6	Wet Scrubber	95		
3.	31430405	Mechanized Fittings Shakeout	546	no	546	None	0		
4.	31430406	5' Pipe Shot Blast & Grinding	96	yes	96	Wet Scrubber	95		
5.	31430410	Stationary Grinders	24	yes	24	Centrifugal Collector	95		
6.	31430412	Stationary Grinders	2.4	yes	2.4	Centrifugal Collector	95		
7.	31430414	Cut-off Saws and Grinders	1.6	yes	1.6	Centrifugal Collector	95		
8.	31430417	Sand Reclaiming & Handling	30.4	yes	30.4	Wet Scrubber	95		
9.	31430426	Shell Core Sand Coating System	.8	yes	.8	Baghouse	99.8		
10.	31430484	108" Cupolas	168	yes	168	Baghouse	99		
Sub-Total Soil Pipe			1006		1006				
II. Valve & Fitting									
1.	31230007	(4) Pedestal Grinders	.8	yes	.8	Baghouse	99		
2.	31230009	Pangborn Rotoblast Barrels	3.2	yes	3.2	Baghouse	99		
3.	31230025	Binks Water Wash Spray Booth							
4.	31230026	Binks Water Wash Spray Booth							
5.	31230027	Binks Water Wash Spray Booth							
6.		Pangborn Rotoblast (8',10') Tables	27.2	yes	40.8	Baghouse	99.5		
7.		Brass-Bronze Melting & Green Sand Molding	.8	yes	.8	Baghouse	99		
8.	31230017	Lead Melting Furnace	.8	no	.8	None	0		
9.	31230018	Core Oven Steiner-Ives	.6	no	.6	None	0		
10.	31230020	Rover Green Sand System	.8	yes	.8	Baghouse	99		
11.	31230010	Abrasive Sand Blast	16.2	yes	16.2	Baghouse	99		
12.	31230011	Shell Molding Machine	4.8	yes	4.8	Baghouse	99		
13.	31230015	Shell Sand Mold Pouring	10.4	no	10.4	None	0		
14.	31430309	Swing Grinders #2 Shed	4.8	yes	7.2	Centrifugal Collector	99		

MWPS012101

15.	31430311	Carpenter Shop	9.6	yes	9.6	Gravity Collector	75
16.	31430313	Pattern Shop	2.4	yes	2.4	Gravity Collector	75
17.	31430315	(2) Coleman Transtrack Core Ovens	12.6	no	16.8	None	0
18.	31430303	12' Rotoblast	20.8	yes	31.2	Baghouse	99.5
19.	31430305	(4) Grinding Booth #2 Shed	9.6	yes	14.4	Gravity Collector	99
20.	31430307	(2) Grinding Booth	6.4	yes	9.6	Gravity Collector	99
21.	31430316	(2) Coleman Transtrack Core Ovens	12.6	no	16.8	None	0
22.	31430321	(2) Swing Frame Grinder #1 Shed	1.6	yes	2.4	Centrifugal Collector	95
23.	31430319	Cleaning System "A"	4.8	yes	7.2	Centrifugal Collector	99
24.	31430323	Cleaning System "B"	4.8	yes	7.2	Centrifugal Collector	99
25.	31430325	Cleaning System "C"	6.4	yes	9.6	Centrifugal Collector	99
26.	31430327	Cleaning System "D"	6.4	yes	9.6	Centrifugal Collector	99
27.	31430329	(3) Rotoblast Barrels Type GN	27.2	yes	40.8	Baghouse	99
28.	31430334	No. 4 Unit	211.2	no	316.8 (3.2)	None Baghouse	0
29.	31430335	Shell Sand Coating	1.6	yes	2.4	Baghouse	99
30.	31430336	Binks Water Wash Spray Booth		yes			
31.	31430337	Booth Pneu. Sand Trans. System	16	yes	24	Baghouse	99
32.	31430338	Aerodyne Sand Transp. #1	12.8	yes	19.2	Baghouse	99
33.	31430339	Binks Water Wash Spray Booth		yes			
34.	31430340	Binks Water Wash Spray Booth		yes			
35.	31430341	Aerodyne Sand Transp. #2	16	yes	24	Baghouse	99
36.		Ductile Iron Treat. & Desulfurizatior	14.4	yes	21.6	Baghouse	99
37.		No. 9 Unit (96)	479	yes		Scrubber Baghouse	~~99~~ 95 99.
Sub-Total Valve & Fitting					115		
TOTAL			946.6 (Baseline)		102	Baghouse	99
		New Cupola	(563.6) w/#9 Control		889.0 (575.4)	(No 9 & No4 controlled with baghouse)	

MWPS012102

UNITED STATES PIPE & FOUNDRY COMPANY, INC.
Chattanooga Valve and Fittings Plant
P. O. Box 311, Chattanooga, TN 37401-0311

→ John Pleasant

September 3, 2002

Mr. Robert Colby, Director
Chattanooga-Hamilton County
Air Pollution Control Bureau
Development Resource Center
1250 Market St, Suite 3020
Chattanooga, TN 37402-4443

Dear Bob:

This letter is a follow up on the telephone conversation on August 20, with Cynthia McDaniels related to a visible release of smoke. The release was due to a shear pin that broke on the control damper for our Number 2 Furnace. Production on this furnace was halted after seeing that the collection equipment was not working properly. Repairs were made that night and the furnace was put back into production the next day.

As always, if you have any questions feel free to call me (752-3825), or Gregg Creehan (752-3910).

Very Truly Yours:

David J. Diederich
Plant Manager

MWPS012103

UNITED STATES PIPE AND FOUNDRY COMPANY

June 18, 1969

US PIPE & FOUNDRY RECEIVED JUN 20 1969 CHATTANOOGA, TENN.

TO: Mr. C. A. Johnson ADDRESS: Chattanooga Fittings

FROM: Don C. Wallace ADDRESS: General Office

SUBJECT: AIR POLLUTION CONTROL ORDINANCE - CITY OF CHATTANOOGA

COPIES TO: Mr. D. L. Saltsman
Mr. R. Bates Wilson - Ottis S. Cooper, Jr.
Mr. C. N. Codding

Attached for your information is a copy of a letter from Mr. John Allen Carter, verifying receipt of registration information required for Section 15 of the Chattanooga Air Pollution Control Ordinance.

Don C. Wallace

Don C. Wallace

DCW/as

Attachment

City of Chattanooga

BUREAU OF AIR POLLUTION CONTROL
AND BOILER INSPECTION

MUNICIPAL BUILDING
Chattanooga, Tennessee

RECEIVED
JUN 17 19

Wallace

June 16, 1969

Mr. Don C. Wallace,
Project Engineer,
Environmental Control,
U.S. Pipe & Foundry Company,
3300 First Avenue, North
Birmingham, Ala. (35202)

Dear Don:-

Thank you for your letter June 13, 1969 outlining the equipment used at your company's general foundry and soil pipe plants.

This information we believe is well adequate for our registation section.

It was a real pleasure to make your acquaintance when you and Mr. Seanland visited our offices last June 9th. At any time you may require information please give us the opportunity to provide you with it.

Yours sincerely,

John Allen Carter,
Administrator

JAC:eob

MWPS012105

UNITED STATES PIPE AND FOUNDRY COMPANY
3300 FIRST AVENUE, NORTH
BIRMINGHAM, ALABAMA 35202

US PIPE & FOUNDRY
JUN 16 1969
CHATTANOOGA, TENN.

June 13, 1969

Mr. John Allen Carter, Administrator
Bureau of Air Pollution Control
Room 217, City Hall
Chattanooga, Tennessee

Dear Sir:

Thank you for the hospitality extended Mr. Scanland and myself on our visit of June 9, 1969. We also appreciate your interpretation of Section 15 of the Chattanooga Air Pollution Control Ordinance, as it applies to the U. S. Pipe operations in the city.

As discussed with you at that time, we wish to submit to you the following general information necessary to comply with Section 15:

1. The Chattanooga Fittings Plant and General Foundry, located at 2701 Chestnut Street, is engaged in the manufacture of cast iron pressure pipe fittings and industrial castings. The melting facilities at this location consist of two (2) cupolas with 90" shells, one of which operates at any one time.

2. The Chattanooga Soil Pipe Plant is located at 1000 West 19 Street and is engaged in the manufacture of cast iron soil pipe. Melting is accomplished in one of two (2) cupolas with 108" shells.

3. The Chattanooga Valve Plant has recently been granted a permit from the Bureau of Air Pollution Control and, as discussed with you, has complied with Section 15.

We trust that the above will give you the needed information for registration of our facilities. If any further information is required, please do not hesitate to call me at any time.

Yours very truly,

UNITED STATES PIPE AND FOUNDRY COMPANY

Don G. Wallace

Don G. Wallace
Project Engineer, Environmental Control

DGW/as

bcc: Messrs. D. L. Saltsman
G. B. Scanland
C. A. Johnson
R. Bates Wilson - Ottis S. Cooper, Jr.

FILE

UNITED STATES PIPE AND FOUNDRY COMPANY

Engineering Department
June 11, 1973

MEMORANDUM FOR RECORD

Subject: PROJECT ~~5817~~ C850 EMISSIONS FOR NO. 4 LINE - CHATTANOOGA V&F

On June 6, 1973, Messrs. Ottis Cooper and Ron Sanders, General Office Engineering, visited the Chattanooga V & F Plant for the purpose of evaluating the emissions problem associated with the No. 4 Line. During the visit Messrs. Cooper and Sanders observed the subject operation and met with operating personnel and with Messrs. Tom Deakins and Jerry Simmons.

During the morning several shut-downs of the molding line caused low workloads at the pouring and shake-out area. Sufficient molds were accumulated and poured such that observations of air emissions during sustained operations was possible during a full one hour period. During that period a total of 7 drags were shaken-out.

It is during this period that the hot casting and sand are exposed to the air and the most severe emission of smoke occurs. Smoke emissions were observed from a point on the west side of the foundry building. The smoke was emitted through the louvered openings in the roof monitor. The total time of emissions in excess of 20% opacity during the 1-hour period was 7 minutes 35 seconds. A light haze (5-10%) opacity existed at the louver area during the remainder of the period. During the observation period the sky was overcast and there was very little wind.

Chattanooga regulations allow emissions at or above 20% opacity for 5 minutes in any consecutive 60 minutes, but for no more than 20 minutes cumulative in 24 hours. Discussions with operating personnel and review of production records indicate an average production rate of approximately 5 flasks per hour. The nominal production rate should be 6 to 7 flasks per hour with a maximum capability of 8 flasks per hour. The No. 4 Line is presently operated on the 1st and 2nd shifts only with the No. 10 Line operated on the 3rd shift.

Present procedure after pouring is:

0 min.	-	Pour
15 min.	-	Remove clamps from flasks
20 min.	-	Remove cope and shake-out
30-35 min.	-	Drag and casting to shake-out
	-	After shake-out move casting to cooling area
	-	After cooling of casting, shake-out core.

One bridge crane serves the shake-out area and one bridge crane serves the pouring operation. The bridge crane serving the shake-out area is to have the cab moved to the east wall and be air conditioned. This is expected to bring the crane operator within OSHA dust limitations.

The shake-out of castings is the greatest source of air emissions and the only portion of the operation which presently results in excess emissions to the outside atmosphere. The cooling area where castings are stacked after shake-out follows the casting shake-out in quantity of emissions. At present castings are stacked on the east side of the main foundry building adjacent to the shake-out area. Emissions result from cores in contact with the hot castings and are continuous until a casting has cooled. A forklift has been purchased for handling the castings so that they may be placed in baskets and moved outside the south end of Air-Set Core Room to cool. This is required due to the need to use the present areas for handling flasks and to allow a roadway for bringing iron to the new furnace. It is also anticipated that sand losses from the present method will be reduced. Delivery of the forklift is scheduled for the latter part of June.

Additional air emissions occur during the pouring operation and from flask drags awaiting shake-out. At the present time some ductile treating is performed in the No. 4 Line pouring area resulting in emissions of particulate matter. This operation will be carried out in the future adjacent to the new induction furnace which should be in operation by mid - to late summer. Ductile treating fumes from this area are to be collected as part of the overall ductile emissions control plan. Removal of copes results in predominantly steam emissions.

The results of the observations were discussed with Messrs. Deakins and Simmons. Removal of the fittings to the outside for cooling may very likely result in emissions in excess of regulations due to direct emission to the atmosphere giving plune opacity in excess of 20%.

Results of evaluation of emissions from the shake-out operation indicate that emissions from this source are in violation of the regulations. These emissions, although in violation, were relatively minor. For this reason and due to the extreme difficulty which would be encountered in hooding the shake-out, plant engineering personnel are to try several approaches to alleviate the problem before active controls are applied.

Upon completion of these approaches, a re-evaluation will be made.

Sanders

H. R. Sanders

HRS/rdm

cc: Messrs. Messrs. J. D. McGill, Jr.
R. B. Wilson - C. C. Pierce
T. A. Deakins - Jerry Simmons
Ottis S. Cooper, Jr.

****

A TRIP THROUGH

THE CHATTANOOGA PLANT

SOIL PIPE DIVISION

UNITED STATES PIPE AND FOUNDRY COMPANY

****

1-71

ACQUIRED: NOVEMBER 1, 1961
From
COMBUSTION ENGINEERING, INC.

FOUNDED: 1888

I. PRODUCT

Cast Iron Soil Pipe and Fittings - 2" Through 15" Diameter.
Cast Iron No-Hub Pipe and Fittings - 1½" Through 8" Diameter.

II. BUILDINGS

1.	Main Plant	125,000 Sq. Ft.
2.	Main Office	11,000 Sq. Ft.
3.	Storage (Maintenance Parts and Supplies)	19,500 Sq. Ft.
4.	Storage (Patterns and Bulk Supplies)	13,000 Sq. Ft.
5.	Maintenance Building	12,000 Sq. Ft.
6.	Bath and Change House	5,000 Sq. Ft.

III. GROUNDS

1.	Total Area	35 Acres
2.	Raw Material Storage Under Crane	30,000 Sq. Ft.
3.	Finished Goods Storage (Concrete)	473,000 Sq. Ft.
4.	Parking Lot & Truck Staging Area	227,000 Sq. Ft.

IV. MATERIALS CONSUMED (Average Per Day)

1.	Raw Metallics	575 Tons
2.	Coke	60 Tons
3.	Sand:	
	Natural	100 Tons
	Resin Coated	33 Tons
4.	Electric Power	75,000 K.W.H.
5.	Natural Gas	780,000 C.F.
6.	Water	1,125,000 Gallons
7.	Maintenance Material	$1,300

V. PRODUCTION (Average Capacity Per Day)

1.	Five Foot Pipe	190 Tons	9,150 Pcs.
2.	Ten Foot Pipe	230 Tons	4,600 Pcs.
3.	Mechanized Fittings	105 Tons	21,000 Pcs.
4.	Hand Made Fittings	10 Tons	2,100 Pcs.
	TOTAL (Per Day)	535 Tons	36,850 Pcs.
	TOTAL (Per Month)	11,235 Tons	773,850 Pcs.

(Based on 21 Days/Month - 3 Shifts/Day Operation)

VI. SHIPPING

1. Truck Dock Facilities: Load 17 Trucks Simultaneously
2. Rail Dock Facilities: Load 8 Rail Cars Simultaneously
3. Shipments: (Spring Thru Fall) 2,500 Tons/Wk. - 1/4 Million Pcs./Wk.
4. Finished Goods Inventory: Over 8,000 Different Items - 20,000 Tons

VII. EQUIPMENT

A. Melting:

1. Two Cupolas

   a. Size: 108" Diameter - Melting Zone: 90" Diameter
   b. Five Water-Cooled Protruding Tuyeres Per Cupola
   c. Internal Water-Cooled Melting Zone
   d. 600 Deg. F. Gas/Oil-Fired Air Pre-Heaters
   e. Two Blowers: 300 h.p. - 48 oz. Pressure - 17,700 C.F.M.
   f. Front Slagging
   g. Melting Rate: 35 Tons Per Hour
   h. Each Cupola Operated 120 Hours Continuously

2. One 450 K.W. Induction Furnace (For Alloying)

B. Production:

1. Pipe	Machines
a. Centrifugal Sand Cast: 5-Foot, 2-Spindle	7
b. Centrifugal Sand Cast: 10-Foot, Multiple Mold	1
c. Centrifugal Permanent Mold: 10-Foot, Multiple Mold	2
d. Centrifugal Permanent Mold: 10-Foot, Single Station	1

2. Fittings	
a. Mechanized Molding Machine	1
b. Hand-Made Fittings (Stations)	6
c. One Automatic Matchplate Molding Machine	1
d. Stationary, Permanent Mold Static Casting Machine	3

C. Production and Sand Conveying Equipment:

1. Mobile Equipment (Fork Trucks, Yard Trucks, Etc.)	45
2. Belt Conveyors (Carry Distance)	2,500 Ft.
3. Vibrating Pan Conveyors	1,000 Ft.
4. Elevators (Lifting Distance)	350 Ft.
5. Overhead Monorail Conveyor	3,800 Ft.
6. Powered Monorail Conveyor	1,400 Ft.
7. Gravity Conveyor	350 Ft.
8. Walking Beam Conveyor	100 Ft.

D. Cleaning Equipment:

1. Pipe

a.	Airless Shot Blast: Walking Beam - 5 Ft.	1
b.	Airless Shot Blast: Skew Roll - 5 & 10 Ft.	1

2. Fittings

a.	Airless Shot Blast Continuous Barrel	1
b.	Airless Shot Blast Monorail Cabinet	1

E. Resin Coated Sand:

1. Sand Coating System (500#/Batch) 33 Tons/Day

VIII. MISCELLANEOUS

1.	Production Approximately 10% of Nation's Requirements		
2.	Time from Raw Materials to Shipping Docks	(Hours)	1.5
3.	Average Weight of Fittings	(Pounds)	11.2
4.	Average Weight of 5-Foot Pipe	(Pounds)	41.7
5.	Average Weight of 10-Foot Pipe	(Pounds)	105.0
6.	Approximate Investment Per Job		$12,000

7. Major Installed Horse Power:

a.	Cupola Air	600
b.	Compressed Air	865
c.	Ventilation Air	620
d.	Pipe Machines	1,190
e.	Fittings Machines	130
f.	Cleaning Equipment	275
g.	Sand Mullers	1,000
h.	Conveyors	775
	TOTAL	5,455

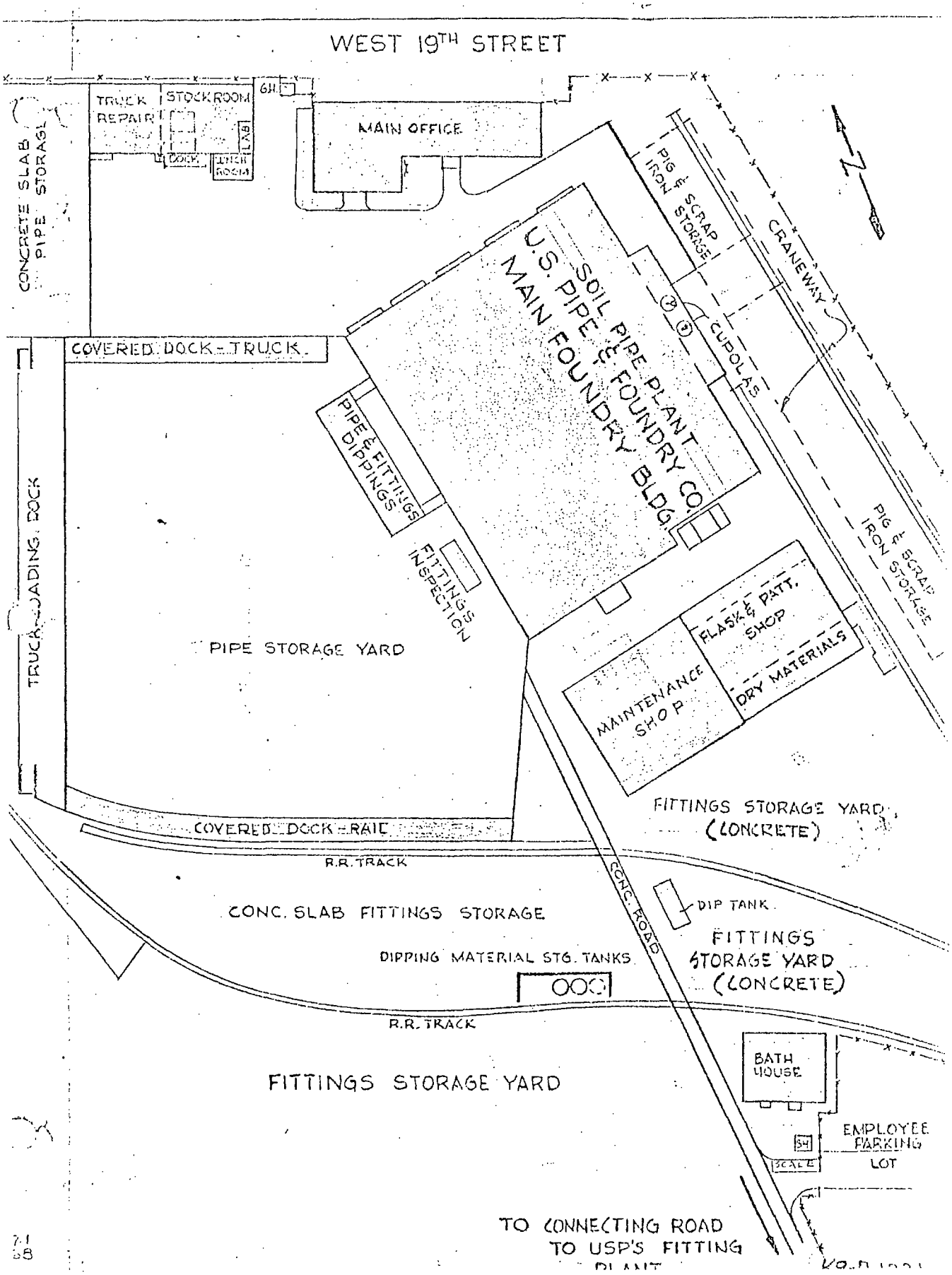
WEST 19TH STREET
TRUCK REPAIR
STOCKROOM
LAB
DOCK
LUNCH ROOM
6H
MAIN OFFICE
CONCRETE SLAB PIPE STORAGE
PIG & SCRAP IRON STORAGE
CRANEWAY
SOIL PIPE & FOUNDRY CO. MAIN FOUNDRY BLDG.
CUPOLAS
COVERED DOCK - TRUCK
PIPE & FITTINGS DIPPINGS
FITTINGS INSPECTION
TRUCK LOADING DOCK
PIPE STORAGE YARD
PIG & SCRAP IRON STORAGE
FLASK & PATT. SHOP
DRY MATERIALS
MAINTENANCE SHOP
FITTINGS STORAGE YARD (CONCRETE)
COVERED DOCK - RAIL
R.R. TRACK
CONC. ROAD
DIP TANK
CONC. SLAB FITTINGS STORAGE
FITTINGS STORAGE YARD (CONCRETE)
DIPPING MATERIAL STG. TANKS
R.R. TRACK
BATH HOUSE
FITTINGS STORAGE YARD
EMPLOYEE PARKING LOT
54
SCALE
TO CONNECTING ROAD TO USP'S FITTING PLANT

MWPS012113

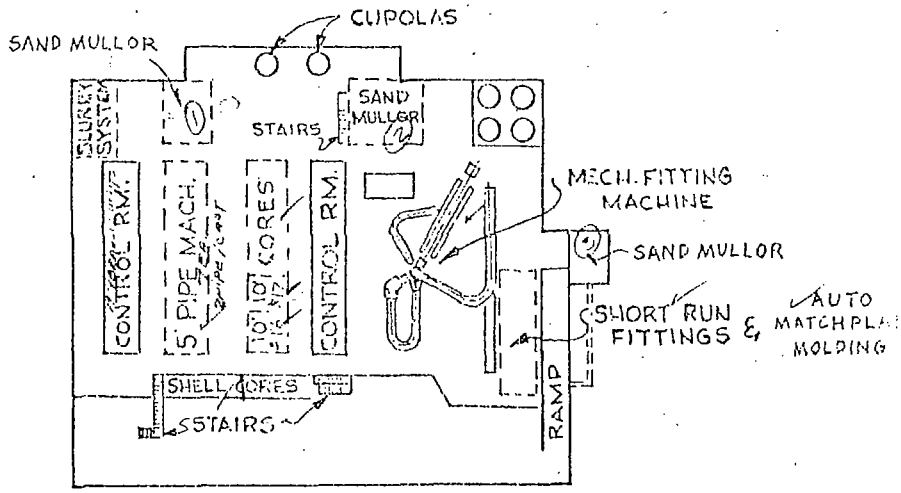

MEZZANINE FLOOR

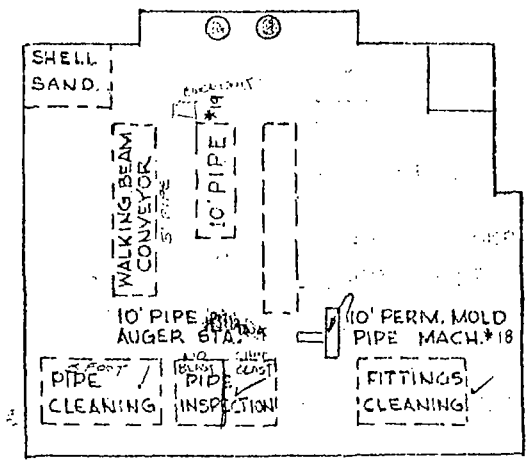

MAIN FLOOR

Memorandum for Record

February 1, 2002

We had a visit from USEPA Region 4, Air Enforcement Section on Thursday, January 31, 2002. Representing EPA were Todd Russo and Susan Park; representing CHCAPCB were Errol Reksten and Cynthia McDdaniel; representing USPipe were Gregg Creehan and Dennis Urbaniak. The purpose of such a visit is both to inspect our compliance with our Part 70 Permit and to evaluate the effectiveness of the Bureau's inspections of our plant.

They arrived about 9:30 a.m. We had a brief meeting where they officially identified themselves and indicated why they were here and what they hoped to do. They started by asking us to describe our major processes and raw materials. They then presented us with a list (attached to the original of this MFR) of documents they wanted to review after they took a tour of our plant. Gregg took them on the tour while Dennis collected the documents for their review.

They finished their tour about 12:30 and went to lunch. They returned about 1:10 and started their review of the records. They asked us to make copies of some records; attached to the original of this MFR are duplicates of all copies we provided.

At about 3:30 they were ready to conduct an exit briefing. Present for this briefing were all persons named above plus Stuart Box and Jim Swafford. EPA listed the following as "concerns:"

- Visible emissions from the furnace building, especially as related to filling the furnaces
- Visible emissions from the cupola baghouse duct and from inspection ports in the hoppers
- Visible emissions from the cupola duck's nest
- Steam and possibly particulate coming from the blending drum building; their stated concern is that this may indicate insufficient draft of air to the cyclone
- Some of the socks from the bottom of the baghouse into the dump pan were too short and allowed dust to escape before it could be collected in the dump pan
- Cleaning the street sweeper with an air hose causes the release of much dust
- Some baghouses were operating at a differential pressure outside their allowable range
- The differential pressure gauge on the FBE airblast baghouse had never been installed.

They also noted the same record-keeping problems for which we received an NOV from the CHCAPCB, but they are concerned we have yet to demonstrate an effective resolution.

EPA now has three options:

1. They can do nothing, and recommend the same
2. They can direct CHCAPCB to take appropriate actions
3. They can take action themselves.

EPA will write a report and send us a copy. This process typically takes about one month.

Dennis Urbaniak

US Pipe & Foundry 1/31/02

NAME	Company	Phone #
Todd Russo	US EPA R4	(404) 562-9184
Dennis Urbaniak	U.S. Pipe	423/752-3912
Ezral Rokston	CHCAPCB	423 668-2570
Gregg Creehan	U.S. Pipe	423-752-3910
Cynthia McDaniel	C-HC APCB	423-668-2566
Susan Park	EPA	404 562 9203

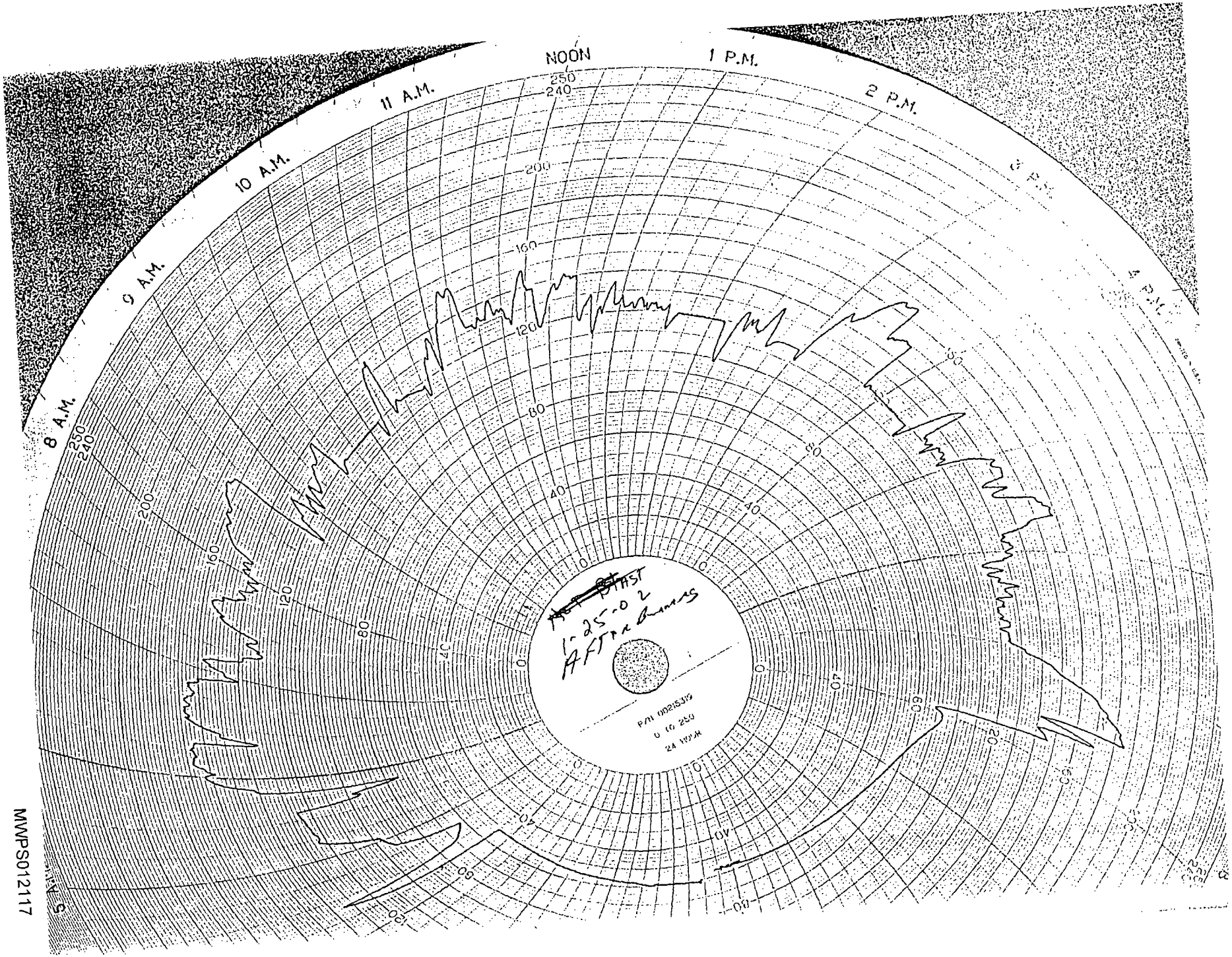
8 A.M.
9 A.M.
10 A.M.
11 A.M.
NOON
1 P.M.
2 P.M.
3 P.M.
4 P.M.
1-25-02
After Business
P/N 0021539
0 TO 250
24 HOUR

MWPS012117

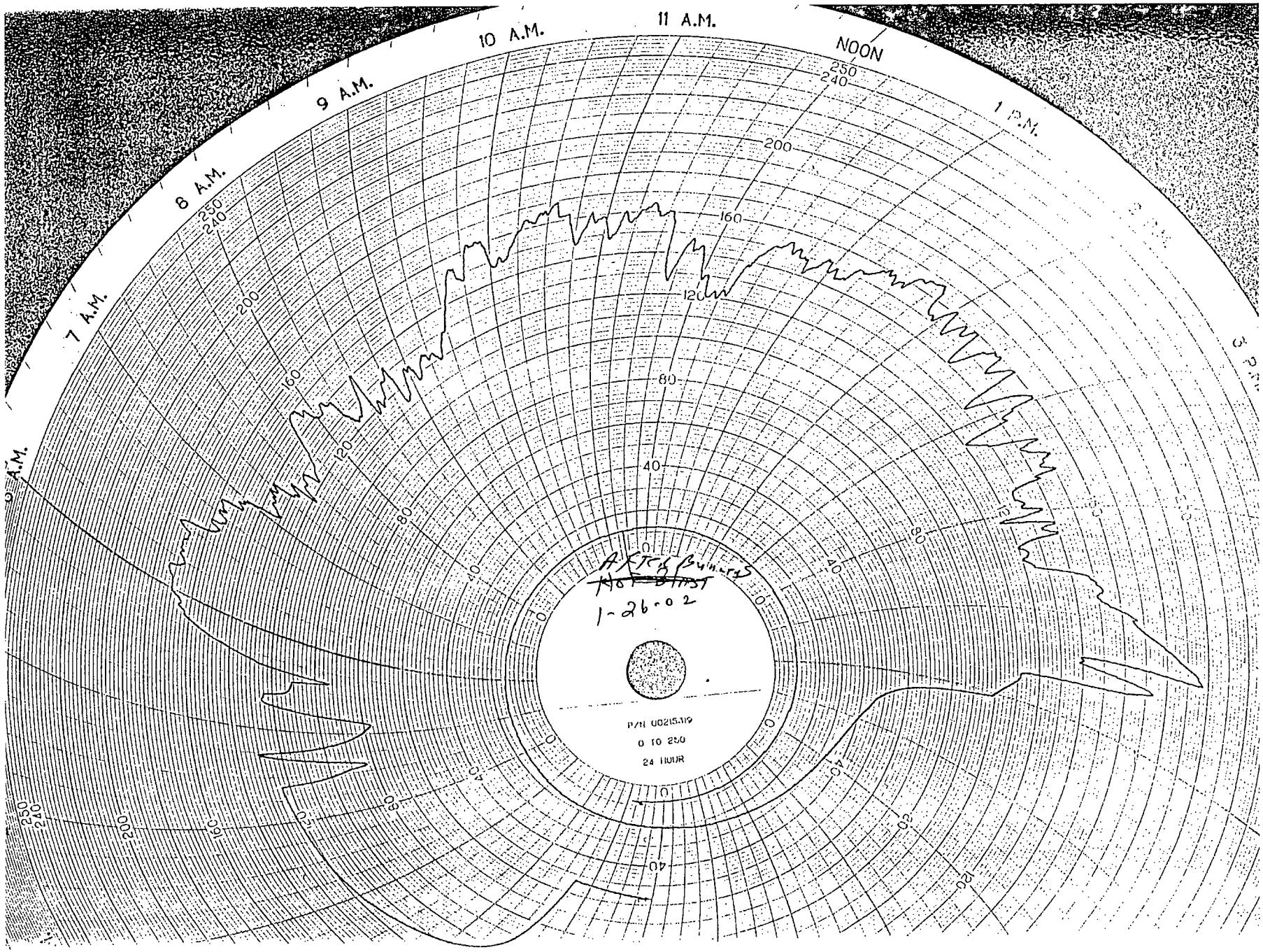

MWPS012118

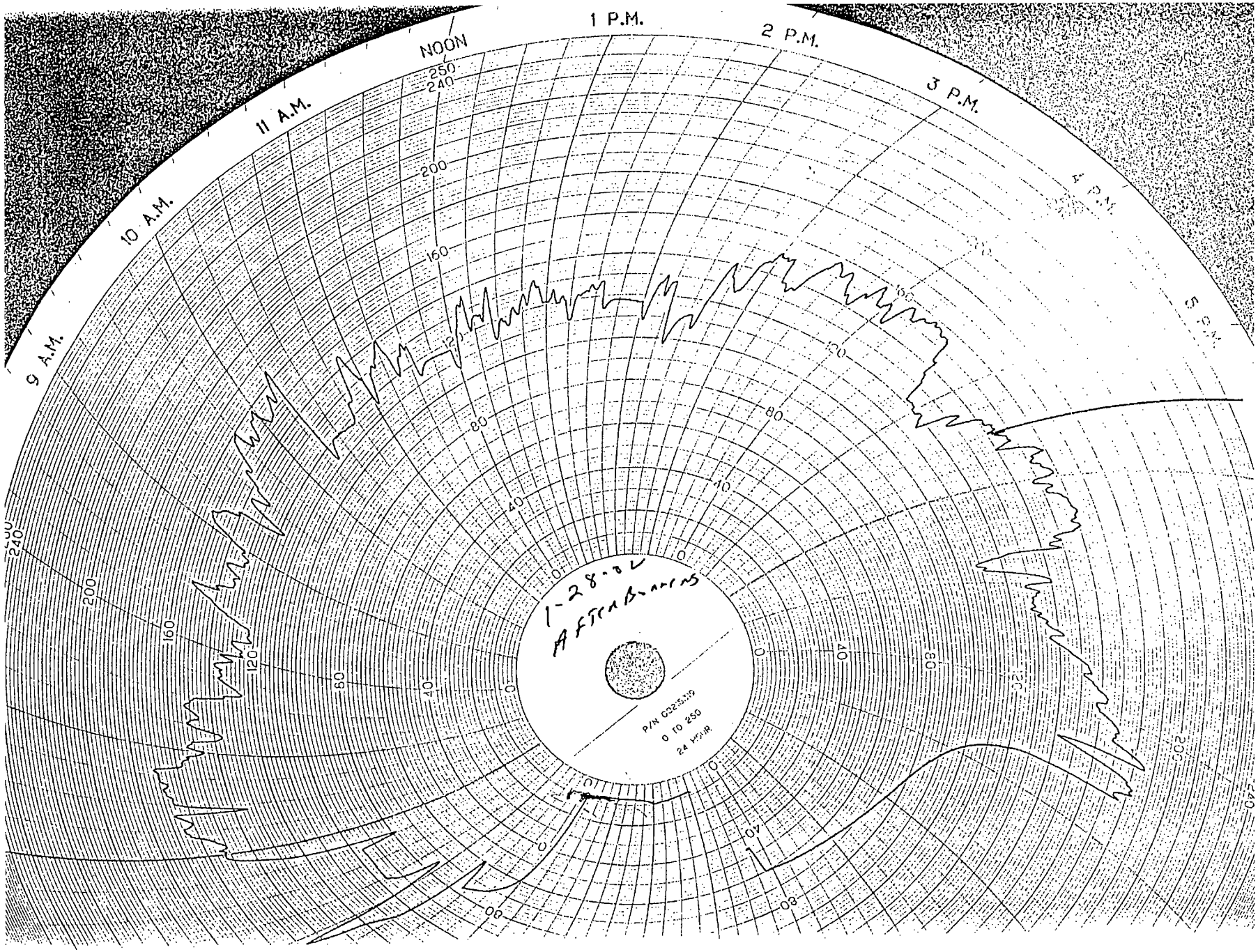
9 A.M.
10 A.M.
11 A.M.
NOON
1 P.M.
2 P.M.
3 P.M.
4 P.M.
5 P.M.
1-28-02
After Burners
P/N 0325319
0 TO 250
24 HOUR

MWPS012119

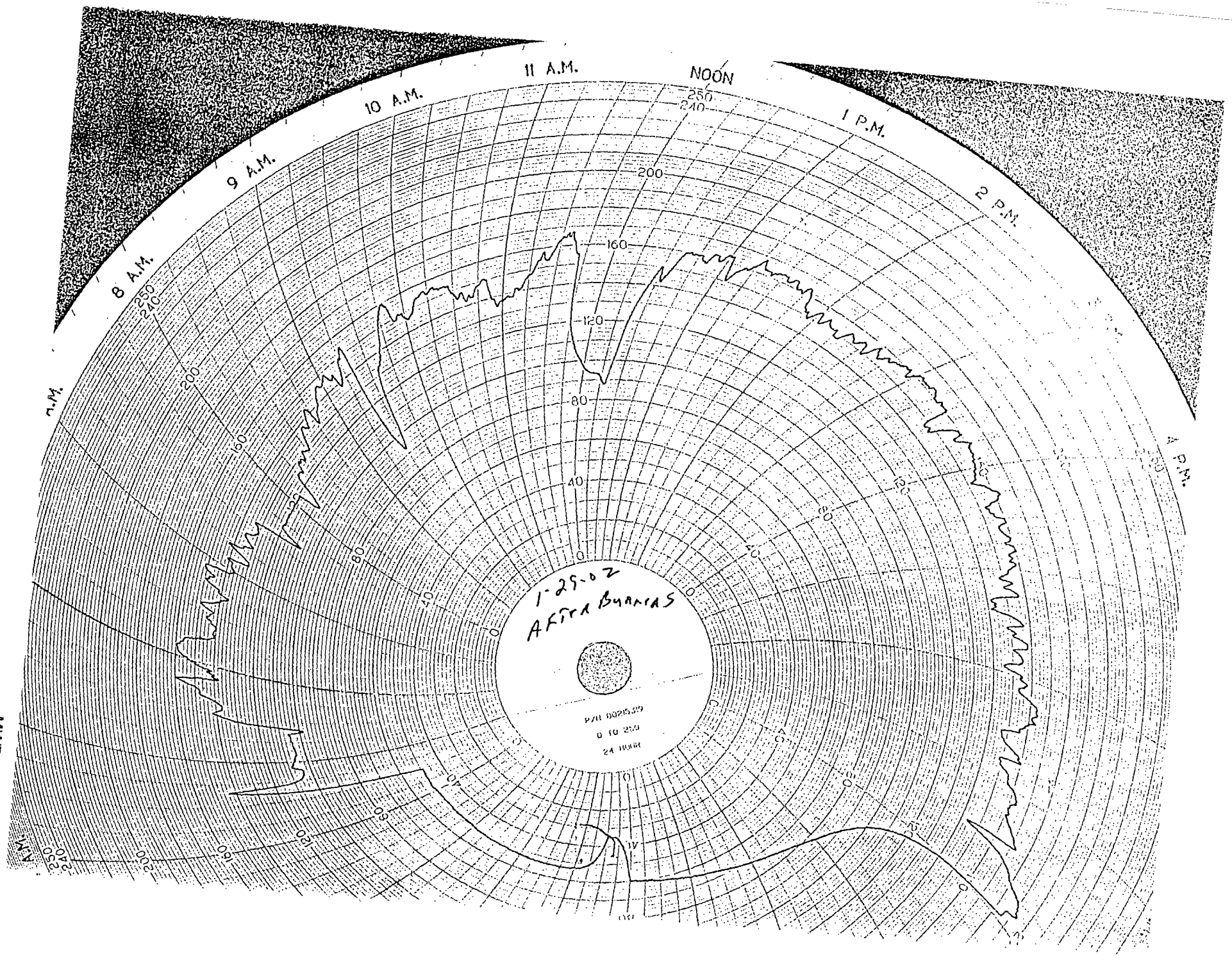

MWPS012120

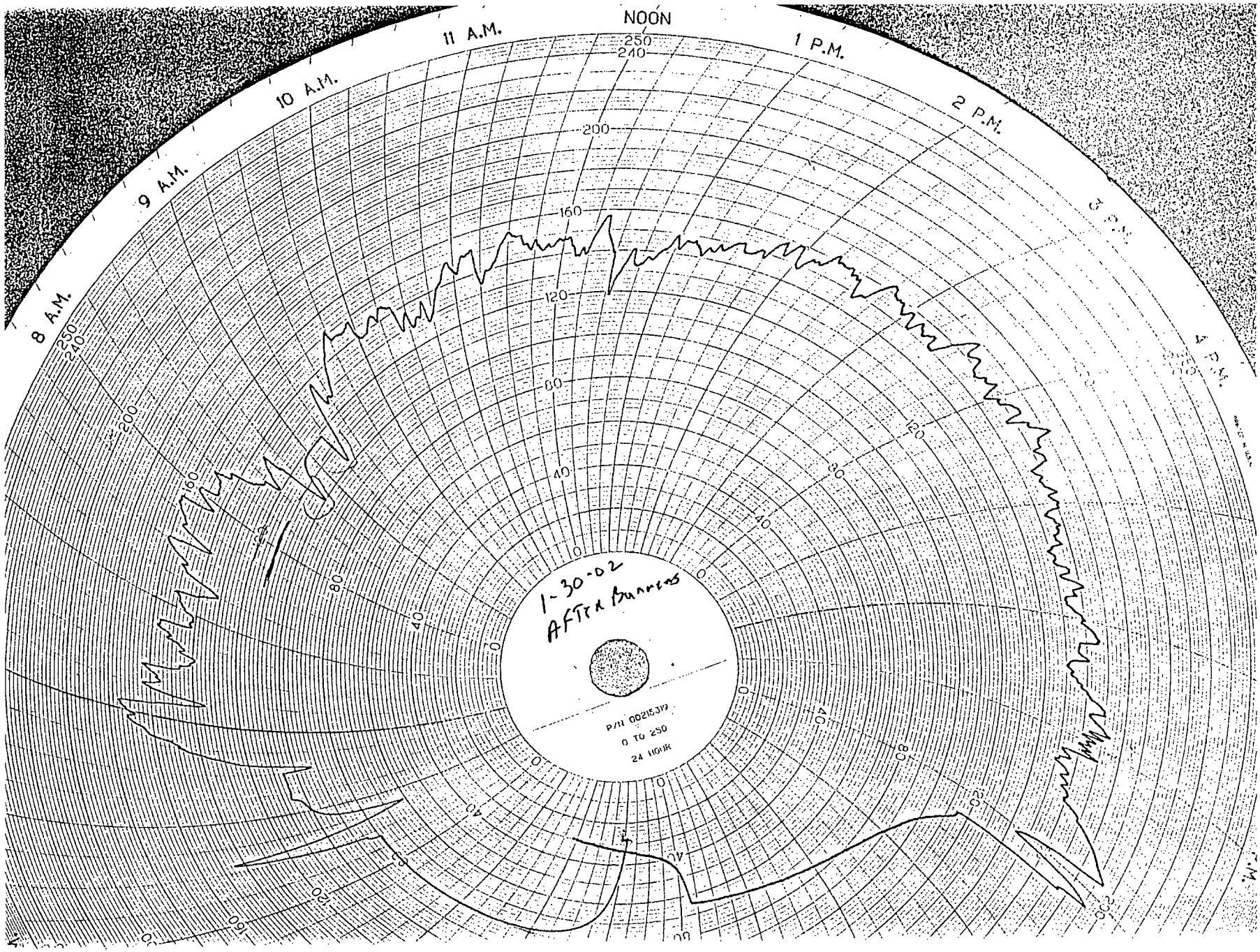
NOON
1 P.M.
2 P.M.
3 P.M.
4 P.M.
8 A.M.
9 A.M.
10 A.M.
11 A.M.
1-30-02
After Burners
P/N 00215319
0 TO 250
24 HOUR

MWPS012121

MWPS012122

form: ECD 002

EMISSIONS CONTROL DEVICE

DIFFERENTIAL PRESSURE DROP MONITORING

CONTROL DEVICE NAME AND LOCATION #2 C/S 12' Blast

GAUGE READING	DAY	MONTH	YEAR	SIGNED (INITIALS)
	1	July	01	
4.4	2	July	01	WKS
4.2	3	July	01	WKS
	4			
4.4	5	July	01	WKS
4.2	6	July	01	WKS
	7			
	8			
4.4	9	July	01	WKS
4.2	10	July	01	WKS
4.4	11	July	01	WKS
4.8	12	July	01	WKS
4.8	13	July	01	WKS
4.4	14	July	01	WKS
4.8	15	July	01	WKS
4.4	16	July	01	WKS
4.8	17	July	01	WKS
4.6	18	July	01	WKS
4.4	19	July	01	WKS
4.0	20	July	01	WKS
4.0	21	July	01	WKS
	22			
4.2	23	July	01	WKS
8.0	24	July	01	WKS
8.6	25	July	01	WKS
8.8	26	July	01	WKS
8.8	27	July	01	WKS
6.8	28	July	01	WKS
	29			
8.8	30	July	01	WKS
4.2	31	July	01	WKS

DOW Kilgore MAINT NOTIFIED

GAUGE READINGS MUST BE TAKEN AND RECORDED DAILY

SIGNED [signature] DATE 8-1-01

COMPLETED FORM MUST BE TURNED IN TO INSPECTION AND PLANNING DEPARTMENT MONTHLY.

mip/99

form: ECD 002

EMISSIONS CONTROL DEVICE

DIFFERENTIAL PRESSURE DROP MONITORING

CONTROL DEVICE NAME AND LOCATION New Bag House

GAUGE READING	DAY	MONTH	YEAR	SIGNED... (INITIALS)
4.2	1	5	01	RD
4.2	2	5	01	RD
4.2	3	5	01	RD
4.2	4	5	01	RD
4.2	5	5	01	RD
	6	SUN		
4.2	7	5	01	RD
4.2	8	5	01	RD
4.2	9	5	01	RD
4.2	10	5	01	RD
4.2	11	5	01	RD
4.2	12	5	01	RD
	13	SUN		
4.2	14	5	01	RD
4.2	15	5	01	RD
4.2	16	5	01	RD
4.2	17	5	01	RD
4.2	18	5	01	RD
4.2	19	5	01	RD
	20	SUN		
4.2	21	5	01	RD
4.2	22	5	01	RD
4.4	23	5	01	RD
4.4	24	5	01	RD
4.4	25	5	01	RD
	26	SAT	01	RD
	27	SUN		
4.4	28	5	01	RD
4.4	29	5	01	RD
4.4	30	5	01	RD
4.4	31	5	01	RD

GAUGE READINGS MUST BE TAKEN AND RECORDED DAILY

SIGNED Ricky Dalu DATE

COMPLETED FORM MUST BE TURNED IN TO INSPECTION AND PLANNING DEPARTMENT MONTHLY.

mjp/99

form: ECD 002

EMISSIONS CONTROL DEVICE

DIFFERENTIAL PRESSURE DROP MONITORING

CONTROL DEVICE NAME AND LOCATION New BAG HOUSE

GAUGE READING	DAY	MONTH	YEAR	SIGNED (INITIALS)
	1			
5.2	2	4	01	RH
5.2	3	4	01	RH
5.2	4	4	01	RH
5.2	5	4	01	RH
5.2	6	4	01	RH
5.2	7	4	01	RH
	8	SUN		
5.2	9	4	01	RH
5.2	10	4	01	RH
5.2	11	4	01	RH
5.2	12	4	01	RH
	13	4 H	01	RH
	14	SAT	01	RH
	15	SUN		
5.2	16	4	01	RH
5.2	17	4	01	RH
5.2	18	4	01	RH
5.2	19	4	01	RH
5.2	20	4	01	RH
5.2	21	4	01	RH
	22	SUN		
5.2	23	4	01	RH
5.2	24	4	01	RH
5.2	25	4	01	RH
5.2	26	4	01	RH
5.2	27	4	01	RH
5.2	28	4	01	RH
	29	SUN		
5.2	30	4	01	RH
5.2	31	4	01	RH

GAUGE READINGS MUST BE TAKEN AND RECORDED DAILY

SIGNED Ricky Dalu DATE 4/31/01

COMPLETED FORM MUST BE TURNED IN TO INSPECTION AND PLANNING DEPARTMENT MONTHLY.

mjp/99

form: ECD 002

EMISSIONS CONTROL DEVICE

DIFFERENTIAL PRESSURE DROP MONITORING

CONTROL DEVICE NAME AND LOCATION New Bag House

GAUGE READING	DAY	MONTH	YEAR	SIGNED... (INITIALS)
	1			
	2			
	3			
	4			
1.6	5	11	01	RD
1.6	6	11	01	RD
2	7	11	01	RD
2	8	11	01	RD
2	9	11	01	RD
	10	SAT		
	11	SUN		
2	12	11	01	RD
1.6	13	11	01	RD
1.8	14	11	01	RD
1.8	15	11	01	RD
1.8	16	11	01	RD
	17	SAT		
	18	SUN		
1.6	19	11	01	RD
1.6	20	11	01	RD
1.8	21	11	01	RD
1.8	22	11	01	RD
1.6	23	11	01	RD
	24	SAT		
	25	SUN		
2	26	11	01	RD
1.8	27	11	01	RD
1.6	28	11	01	RD
1.6	29	11	01	RD
1.6	30	11	01	RD
	31			

GAUGE READINGS MUST BE TAKEN AND RECORDED DAILY

SIGNED Ricky Dalia DATE 11.30.01

COMPLETED FORM MUST BE TURNED IN TO INSPECTION AND PLANNING DEPARTMENT MONTHLY.

mip/99

form: ECD 002

EMISSIONS CONTROL DEVICE

DIFFERENTIAL PRESSURE DROP MONITORING

CONTROL DEVICE NAME AND LOCATION: New Bag House

GAUGE READING	DAY	MONTH	YEAR	SIGNED... (INITIALS)
1.8	1	10	01	
1.8	2	10		
2	3	10		
2	4	10		
2	5	10		
	6	SAT		
	7	SUN		
1.8	8	10		
1.8	9	10		
1.8	10	10		
1.8	11	10		
1.8	12	10		
	13	SAT		
	14	SUN		
1.8	15	10		
1.8	16	10		
2	17	10		
2	18	10		
2	19	10		
	20	SAT		
	21	SUN		
2	22	10		
2	23	10		
2	24	10		
2	25	10		
2	26	10		
	27	SAT		
	28	SUN		
2	29	10		
2	30	10		
2	31	10	01	

GAUGE READINGS MUST BE TAKEN AND RECORDED DAILY

SIGNED Ricky Dalia DATE 11/10/01

COMPLETED FORM MUST BE TURNED IN TO INSPECTION AND PLANNING DEPARTMENT MONTHLY.

mip/99

form: ECD 002

EMISSIONS CONTROL DEVICE

DIFFERENTIAL PRESSURE DROP MONITORING

CONTROL DEVICE NAME AND LOCATION: Cont B/A 5A

GAUGE READING	DAY	MONTH	YEAR	SIGNED (INITIALS)
	1	SUN		
1.2	2	7	01	RH
1.2	3	7	01	RH
1.2	4	7	01	RH
1.2	5	7	01	RH
1.2	6	7	01	RH
	7	SAT		
	8	SUN		
1.2	9	7	01	RH
1.2	10	7	01	RH
1.2	11	7	01	RH
1.2	12	7	01	RH
1.2	13	7	01	RH
	14	SAT		
	15	SUN		
1.1	16	7	01	RH
1.8	17	7	01	RH
1.8	18	7	01	RH
1.8	19	7	01	RH
1.8	20	7	01	RH
	21	SAT		
	22	SUN		
1.8	23	7	01	RH
1.8	24	7	01	RH
	25	7	01	RH
2.0	26	7	01	RH
2.0	27	7	01	RH
	28	SAT		
	29	SUN		
1.8	30	7	01	RH
1.8	31	7	01	RH

GAUGE READINGS MUST BE TAKEN AND RECORDED DAILY

SIGNED Ricky Hale DATE 7/31/01

COMPLETED FORM MUST BE TURNED IN TO INSPECTION AND PLANNING DEPARTMENT MONTHLY.

mjp/99

form: ECD 002

EMISSIONS CONTROL DEVICE

DIFFERENTIAL PRESSURE DROP MONITORING

CONTROL DEVICE NAME AND LOCATION Cont Blast

GAUGE READING	DAY	MONTH	YEAR	SIGNED (INITIALS)
1.8	1	6	01	RH
	2	SAT		
	3	SUN		
1.8	4	6	01	RH
2.0	5	6	01	RD
2.0	6	6	01	RD
2.0	7	6	01	RD
1.8	8	6	01	RD
	9	SAT		
	10	SUN		
1.8	11	6	01	RD
1.8	12	6	01	RD
1.8	13	6	01	RD
2.0	14	6	01	RD
2.0	15	6	01	RD
	16	SAT		
	17	SUN		
1.8	18	6	01	RD
1.8	19	6	01	RD
1.8	20	6	01	RD
1.8	21	6	01	RD
1.8	22	6	01	RD
	23	SAT		
	24	SUN		
1.8	25	6	01	RD
1.8	26	6	01	RD
1.8	27	6	01	RD
1.8	28	6	01	RD
1.8	29	6	01	RD
	30			
	31			

GAUGE READINGS MUST BE TAKEN AND RECORDED DAILY

SIGNED Ricky Dalu DATE 7/9/01

COMPLETED FORM MUST BE TURNED IN TO INSPECTION AND PLANNING DEPARTMENT MONTHLY.

mip/99

form: ECD 002

EMISSIONS CONTROL DEVICE

DIFFERENTIAL PRESSURE DROP MONITORING

CONTROL DEVICE NAME AND LOCATION: Cont Blast

GAUGE READING	DAY	MONTH	YEAR	SIGNED... (INITIALS)
3.2	1	5	01	RD
3.2	2	5	01	RD
3.2	3	5	01	RD
3.2	4	5	01	RD
3.2	5	5	01	RD
	6	SUN		
3.2	7	5	01	RD
3.2	8	5	01	RD
3.2	9	5	01	RD
3.2	10	5	01	RD
3.2	11	5	01	RD
3.2	12	5	01	RD
	13	SUN		
3.2	14	5	01	RD
3.2	15	5	01	RD
3.2	16	5	01	RD
3.2	17	5	01	RD
3.2	18	5	01	RD
3.2	19	5	01	RD
	20	SUN		
2.8	21	5	01	RD
2.8	22	5	01	RD
2.8	23	5	01	RD
2.8	24	5	01	RD
2.8	25	5	01	RD
	26	SAT	01	RD
	27	SUN		
1.8	28	5	01	RD
1.8	29	5	01	RD
1.8	30	5	01	RD
1.8	31	5	01	RD

GAUGE READINGS MUST BE TAKEN AND RECORDED DAILY

SIGNED Ricky Dalu DATE 5/31/01

COMPLETED FORM MUST BE TURNED IN TO INSPECTION AND PLANNING DEPARTMENT MONTHLY.

mip/99

form: ECD 002

EMISSIONS CONTROL DEVICE

DIFFERENTIAL PRESSURE DROP MONITORING

CONTROL DEVICE NAME AND LOCATION Cont Blast

GAUGE READING	DAY	MONTH	YEAR	SIGNED... (INITIALS)
	1			
	2			
	3			
	4			
1.8	5	11	01	RD
1.8	6	11	01	RD
1.8	7	11	01	RD
1.6	8	11	01	RD
2	9	11	01	RD
	10	SAT		
	11	SUN		
2	12	11	01	RD
2	13	11	01	RD
2	14	11	01	RD
2	15	11	01	RD
2	16	11	01	RD
	17	SAT		
	18	SUN		
1.8	19	11	01	RD
1.6	20	11	01	RD
1.8	21	11	01	RD
1.6	22	11	01	RD
2	23	11	01	RD
	24	SAT		
	25	SUN		
2	26	11	01	RD
1.8	27	11	01	RD
1.8	28	11	01	RD
1.8	29	11	01	RD
1.6	30	11	01	RD
	31			

GAUGE READINGS MUST BE TAKEN AND RECORDED DAILY

SIGNED Ricky Hales DATE

COMPLETED FORM MUST BE TURNED IN TO INSPECTION AND PLANNING DEPARTMENT MONTHLY.

mip/SS

form: ECD 002

EMISSIONS CONTROL DEVICE

DIFFERENTIAL PRESSURE DROP MONITORING

CONTROL DEVICE NAME AND LOCATION: 143 Cleaning

GAUGE READING	DAY	MONTH	YEAR	SIGNED... (INITIALS)
	1			
1.6	2	4	01	RB
1.6	3	4	01	RB
1.6	4	4	01	RB
1.6	5	4	01	RB
1.6	6	4	01	RB
1.6	7	4	01	RB
	8	SUN		
1.6	9	4	01	RB
1.6	10	4	01	RB
1.6	11	4	01	RB
1.6	12	4	01	RB
	13	H		
	14	SAT		
	15	SUN		
1.6	16	4	01	RB
1.6	17	4	01	RB
1.6	18	4	01	RB
1.6	19	4	01	RB
1.6	20	4	01	RB
1.6	21	4	01	RB
	22	SUN		
1.6	23	4	01	RB
1.6	24	4	01	RB
1.6	25	4	01	RB
1.6	26	4	01	RB
1.6	27	4	01	RB
1.6	28	4	01	RB
	29	SUN		
1.6	30	4	01	RB
1.6	31	4	01	RB

GAUGE READINGS MUST BE TAKEN AND RECORDED DAILY

SIGNED Ricky Hale DATE 4/31/01

COMPLETED FORM MUST BE TURNED IN TO INSPECTION AND PLANNING DEPARTMENT MONTHLY.

mip/99

form: ECD 002

EMISSIONS CONTROL DEVICE

DIFFERENTIAL PRESSURE DROP MONITORING

CONTROL DEVICE NAME AND LOCATION: 143 Cleaning

GAUGE READING	DAY	MONTH	YEAR	SIGNED (INITIALS)
2.5	1	3	01	RD
2.5	2	3	01	RD
2.5	3	3	01	RD
	4	SUN		
2.5	5	3	01	RD
2.5	6	3	01	RD
2.5	7	3	01	RD
3	8	3	01	RD
3	9	3	01	RD
3	10	3	01	RD
	11	SUN		
1.6	12	3	01	RD
1.6	13	3	01	RD
1.6	14	3	01	RD
1.6	15	3	01	RD
1.6	16	3	01	RD
1.6	17	3	01	RD
	18	SUN		
1.6	19	3	01	RD
1.6	20	3	01	RD
1.6	21	3	01	RD
1.6	22	3	01	RD
1.6	23	3	01	RD
1.6	24	3	01	RD
	25	SUN		
1.6	26	3	01	RD
1.6	27	3	01	RD
1.6	28	3	01	RD
1.6	29	3	01	RD
1.6	30	3	01	RD
1.6	31	3	01	RD

GAUGE READINGS MUST BE TAKEN AND RECORDED DAILY

SIGNED Ricky Dalu DATE 3/31/01

COMPLETED FORM MUST BE TURNED IN TO INSPECTION AND PLANNING DEPARTMENT MONTHLY.

mip/99

Date	1/21/02	1/22/02	1/23/02	1/24/02	1/25/02	Action Level	Allowable
Start time	1:50	1040	1528	1100	1300		
Roof monitors over #10 pouring, cooling, & shakeout	Ø	0	0	0	0	5%	5%
Roof monitors over #4 pouring, cooling, & shakeout	Ø	0	0	0	0	5%	5%
Roof monitors over #9 pouring, cooling, & shakeout	Ø	0	0	0	0	5%	5%
Furnace building roof vents and ventilators (north)	Ø	5	0	0	0	5%	5%
Furnace building roof vents and ventilators (south)	>15 Sec A	0	0	0	0	5%	5%
DI baghouse	5% A	0	0	0	0	10%	20%
Cupola cap	Ø	0	0	0	0	10%	20%
Cupola building	Ø	6	0	0	0	5%	5%
Charge handling	Ø B	0		0	0	10%	20%
Cupola baghouse	Ø	0	0	0	0	10%	20%
Shellcore building ventilator	Ø	0	0		0	5%	5%
#9 Unit secondary shakeout baghouse	Ø	0	0			10%	20%
#9 Unit casting cooling conveyor baghouse	Ø	0	0		0	10%	20%
#1 Cleaning Shed ventilators	Ø	0	0	0		5%	5%
Old Heat Treat building wall fan	Ø	0	0		0	5%	5%
#2 Cleaning Shed roof eaves	Ø	0	0			5%	5%
Pattern Shop cyclone	Ø	0	0			10%	20%
Brass furnace baghouse	Ø	0				10%	20%
End time	1:25	1100	1541	1130	1330		
Initials	[illegible]	[illegible]	[illegible]	[illegible]	[illegible]		
Sand reclaimer fines baghouse	OBSERVED BY OTHERS					10%	20%
Sand reclaimer classifier baghouse						10%	20%
Burn-off building roof vents						5%	5%

A) Visible Emission
B) Not Charging
C)
D)
E)
F)

Rev 19Mar01

MWPS012134

Date	1/14/02	1/15/02	1/16/02	1/17/02	1/18/02	Action Level	Allowable
Start time	1418	1301	1509	1357	1021		
Roof monitors over #10 pouring, cooling, & shakeout	0	0	0	0	0	5%	5%
Roof monitors over #4 pouring, cooling, & shakeout	0	0	0	0	0	5%	5%
Roof monitors over #9 pouring, cooling, & shakeout	0	0	0	0	0	5%	5%
Furnace building roof vents and ventilators (north)	0		0	0	0	5%	5%
Furnace building roof vents and ventilators (south)	0	0	0	0	0	5%	5%
DI baghouse	0	0	0	0	0	10%	20%
Cupola cap	A0	0	0	0	0	10%	20%
Cupola building	A0	0	0	0	0	5%	5%
Charge handling	A0	0	0	0	0	10%	20%
Cupola baghouse	A0	0	0	0	0	10%	20%
Shellcore building ventilator	0	0	0	0	0	5%	5%
#9 Unit secondary shakeout baghouse	0	0	0	0	0	10%	20%
#9 Unit casting cooling conveyor baghouse	0	0	0	0	0	10%	20%
#1 Cleaning Shed ventilators	0	0	0	0	0	5%	5%
Old Heat Treat building wall fan	0	0	0	0	0	5%	5%
#2 Cleaning Shed roof eaves	0	0	0	0	0	5%	5%
Pattern Shop cyclone	0	0	0	0	0	10%	20%
Brass furnace baghouse	0	0		0	0	10%	20%
End time	1436	1322	1524	1414	1039		
Initials	[illegible]	[illegible]	[illegible]	[illegible]	[illegible]		
Sand reclaimer fines baghouse	OBSERVED BY OTHERS					10%	20%
Sand reclaimer classifier baghouse						10%	20%
Burn-off building roof vents						5%	5%

A) The cupola was temporarily idle
B)
C)
D)
E)
F)

Rev 19Mar01

MWPS012135

Date	1/7/02	1/8/02	1/9/02	1/10/02	1/11/02	Action Level	Allowable
Start time	1350	1327	1251	1517	1030		
Roof monitors over #10 pouring, cooling, & shakeout	0	0	0	0	0	5%	5%
Roof monitors over #4 pouring, cooling, & shakeout	0	0	0	0	0	5%	5%
Roof monitors over #9 pouring, cooling, & shakeout	0	0	0	0	0	5%	5%
Furnace building roof vents and ventilators (north)	0	0	0	0	0	5%	5%
Furnace building roof vents and ventilators (south)	0	0	0	B	0	5%	5%
DI baghouse	0	0	0	0	0	10%	20%
Cupola cap	0	0	0	C	0	10%	20%
Cupola building	0	0	0	C	0	5%	5%
Charge handling	0	0	0	C	0	10%	20%
Cupola baghouse	0 2.0	A	0 4.2	C 4.5	0	10%	20%
Shellcore building ventilator	0	0	0	0	0	5%	5%
#9 Unit secondary shakeout baghouse	0	0	0	0	0	10%	20%
#9 Unit casting cooling conveyor baghouse	0	0	0	0	0	10%	20%
#1 Cleaning Shed ventilators	0	0	0	0	0	5%	5%
Old Heat Treat building wall fan	0	0	0	0	0	5%	5%
#2 Cleaning Shed roof eaves	0	0	0	0	0	5%	5%
Pattern Shop cyclone	0	0	0	0	0	10%	20%
Brass furnace baghouse	0	0	0		0	10%	20%
End time	1414	1358	1311	1551	1050		
Initials	WDM	WDM	WDM	WDM	WDM		
Sand reclaimer fines baghouse	OBSERVED BY OTHERS					10%	20%
Sand reclaimer classifier baghouse						10%	20%
Burn-off building roof vents						5%	5%

A) VE from around section 14; closed sections 14 & 15; VE stopped; reported to Maint
B) VE from south gable of furnace building; took formal reading
C) The cupola was temporarily idle
D)
E)
F)

Rev 19Mar01

MWPS012136

MWPS012137

1500	:00	:15	:30	:45
:00				
:01				
:02				
:03				
:04				
:05				
:06				
:07				
:08				
:09				
:10				
:11				
:12				
:13				
:14				
:15				
:16				
:17				
:18				
:19			30	50
:20	45	40	40	40
:21	40	35	5	15
:22	20	15	10	15
:23	10	15	10	10
:24	10	15	0	10
:25	5	10	10	5
:26	5	5	5	5
:27	5	0	5	0
:28	5	0	5	0
:29	0	5	0	0

1/10/02

	:00	:15	:30	:45
:30	5	5	5	5
:31	0	0	0	0
:32	0	0	0	0
:33	0	0	0	0
:34	0	0		
:35				
:36				
:37				
:38				
:39				
:40				
:41				
:42				
:43				
:44				
:45				
:46				
:47				
:48				
:49				
:50				
:51				
:52				
:53				
:54				
:55				
:56				
:57				
:58				
:59				

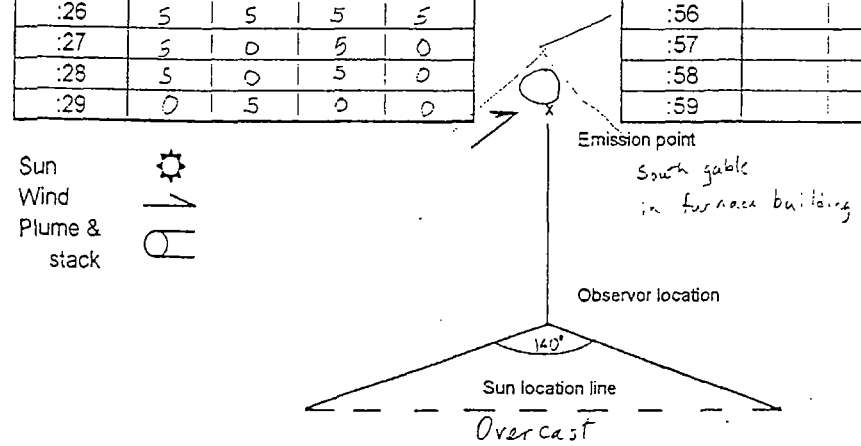

Notes: _____

Date	12/17/01	12/18/01	12/19/01	12/20/01	12/21/01	Action Level	Allowable
Start time	1500	1335	1336	15:00	1320		
Roof monitors over #10 pouring, cooling, & shakeout	0	0	0	0	0	5%	5%
Roof monitors over #4 pouring, cooling, & shakeout	0	0	0	0	0	5%	5%
Roof monitors over #9 pouring, cooling, & shakeout	0	0	A	0	0	5%	5%
Furnace building roof vents and ventilators (north)		0		0	0	5%	5%
Furnace building roof vents and ventilators (south)	0	0	A	0	0	5%	5%
DI baghouse	0	0	0	0	0	10%	20%
Cupola cap	0	0	0	0	0	10%	20%
Cupola building	0	0	0	B	D	5%	5%
Charge handling	0	0	0	0	0	10%	20%
Cupola baghouse	0	0	0	C	E	10%	20%
Shellcore building ventilator	0	0	0	0	0	5%	5%
#9 Unit secondary shakeout baghouse	0	0	0	0	0	10%	20%
#9 Unit casting cooling conveyor baghouse	0	0	0	0	0	10%	20%
#1 Cleaning Shed ventilators	0	0	0	0	0	5%	5%
Old Heat Treat building wall fan	0	0	0	0	0	5%	5%
#2 Cleaning Shed roof eaves	0	0	0	0	0	5%	5%
Pattern Shop cyclone	0	0	0	0	0	10%	20%
Brass furnace baghouse		0	0	0	0	10%	20%
End time	1530	1400	1409	15:30	1337		
Initials	[illegible]	[illegible]	[illegible]	[illegible]	[illegible]		
Sand reclaimer fines baghouse	OBSERVED BY OTHERS					10%	20%
Sand reclaimer classifier baghouse						10%	20%
Burn-off building roof vents						5%	5%

A) VE from gable vent @ furnace building & #9 pouring; formal readings taken
B) VE From Cupola Building 10%
C) [illegible] NOTED
D) Intermittent VE from the cupola charge door; ΔP at baghouse ≈ 13"; running both I.D. fans; reduced wind; troubleshooting shaker timer
E) VE from middle of baghouse; closed section 12; VE down to 0-5%
F)

Rev 19Mar01

MWPS012138

MWPS012139

12/19/01

	:00	:15	:30	:45
:00				
:01				
:02				
:03				
:04				
:05				
:06				
:07				
:08				
:09				
:10				
:11				
:12				
:13				
:14				
:15				
:16				
:17				
:18				
:19				
:20				
:21				
:22				
:23				
:24				
:25				
:26				
:27				
:28				
:29				

1300	:00	:15	:30	:45
:30				
:31				
:32				
:33				
:34				
:35				
:36				
:37				
:38	Gable	#9		
:39			10 / 10	10 5
:40	15 5	15 5	15 10	5 5
:41	10 0	5 0	10 0	5 0
:42	5 0	5 5	10 5	5 0
:43	0 0	5 0	5 10	5 10
:44	5 5	0 0	0 5	5 5
:45	5 0	0 0	0 0	0 5
:46	0 0	5 0	0 0	5 0
:47	0 0	0 0	0 0	0 5
:48	0 0	0 0	0 0	0 0
:49	0 0	0 0	0 5	0 0
:50	0 0	0 0	0 0	0 0
:51	0 0	0 0	0 0	0 0
:52	0 0	0 0	0 0	0 0
:53	0 5	0 0	0 0	0 0
:54	0 0	0 0		
:55				
:56				
:57				
:58				
:59				

Initialed

Sun
Wind
Plume & stack

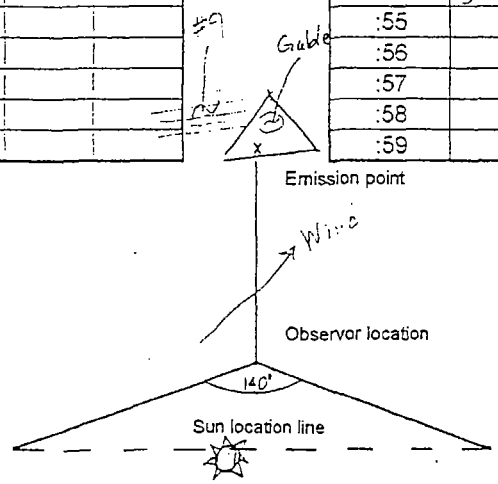

Notes: Average emissions < allowable; no action taken

Pleasant

FEB 2002
G. O. ENGR.
RECEIVED

UNITED STATES
ENVIRONMENTAL PROTECTION AGENCY
REGION 4
AIR ENFORCEMENT SECTION

TODD A. RUSSO
ENVIRONMENTAL SCIENTIST

ATLANTA FEDERAL CENTER
MAIL CODE: 4APT-AEEB
61 FORSYTH SREET, S.W.
ATLANTA, GA, 30303

(404)562-9194
FAX: (404)562-9164

E-mail: Russo.Todd@epa.gov

MWPS012140

UNITED STATES ENVIRONMENTAL PROTECTION AGENCY
REGION 4
ATLANTA FEDERAL CENTER
61 FORSYTH STREET
ATLANTA, GEORGIA 30303-8960

Please

FEB 2 8 2002

4APT-AEEB

Mr. Dennis Urbaniak
Project Engineer
U.S. Pipe & Foundry Company
P.O. Box 311
2701 Chestnut St.
Chattanooga, TN 37401-0311

RECEIVED
MAR 0 4 2002
Plant Engineering

SUBJ: EPA's CAA Inspection Results

Dear Mr. Urbaniak:

The Environmental Protection Agency (EPA) and the Chattanooga-Hamilton County Air Pollution Control Bureau conducted a joint Clean Air Act (CAA) compliance inspection on January 31, 2002. At the conclusion of the inspection, EPA informed U.S. Pipe & Foundry Company that a copy of the completed inspection report could be made available if the report was requested. At that time, U.S. Pipe & Foundry Company requested a copy of the completed inspection report. Enclosed is a copy of EPA's CAA compliance inspection report.

Please contact me at (404) 562-9194 if you have any questions regarding this report.

Sincerely,

Todd A. Russo
Environmental Scientist
Air Enforcement Section

Enclosure

cc: Errol Reksten, Chattanooga-Hamilton County Air Pollution Control Bureau

Internet Address (URL) • http://www.epa.gov
Recycled/Recyclable • Printed with Vegetable Oil Based Inks on Recycled Paper (Minimum 30% Postconsumer)

U.S. ENVIRONMENTAL PROTECTION AGENCY
Region 4
Atlanta Federal Center
61 Forsyth Street, SW
Atlanta, GA 30303-8909

Air Inspection of
U.S. Pipe and Foundry Company, Chattanooga, TN
EPA AFS ID Number: 470653321

A. GENERAL INFORMATION

Inspectors:	Todd Russo, EPA Susan Park, EPA Errol Reksten, Chattanooga-Hamilton County Air Pollution Control Bureau Cynthia McDaniel, Chattanooga-Hamilton County Air Pollution Control Bureau
Inspection Date:	January 31, 2002
Purpose of Inspection:	To evaluate compliance with the requirements of the Clean Air Act.
Facility Personnel/Title: **Telephone:**	Dennis Urbaniak, Project Engineer (423) 752-3912 Gregg A. Creehan, Plant Engineer (423) 752-3910
Report Prepared by:	Todd Russo TR 2/26/01

B. TYPE OF FACILITY

U.S. Pipe and Foundry Company (U.S. Pipe) produces ductile iron fittings, valves, and hydrants for the transmission and distribution of water. U.S. Pipe operates the main iron foundry and a brass foundry at the Chattanooga facility. The Environmental Protection Agency (EPA) was accompanied by the Chattanooga-Hamilton County Air Pollution Control Bureau to determine U.S. Pipe's compliance status with the Clean Air Act.

The plant is located at 2501 Chestnut Street in Hamilton County Chattanooga, Tennessee. U.S. Pipe has approximately 650 employees and has just celebrated its 100 year anniversary in 1999. The major process operations include: scrap handling, melting (cupola), electric induction furnaces, pouring, desulfurization, shakeout, casting, and coating operations.

C. REGULATION REVIEW

U.S. Pipe was issued a Part 70 major source operating permit on February 16, 2001. U.S. Pipe was constructed before Prevention of Significant Deterioration (PSD) regulations became effective.

D. PROCESS DESCRIPTION

Main Foundry

Raw materials such as metallic scrap, coke, lime, stampings (steel scrap), and returns are charged into the 35 ton per hour melt capacity cupola located at the melting facility. Once melted, the molten gray iron and slag are tapped from the cupola. The gray iron flows through the cupola runners to 15 ton holding ladles. The slag flows to the slag pit located beside the cupola. Once full, the ladle of molten iron is transported to the treating building via a lift truck for the desulfurization process.

The desulfurization process is performed in the ladle using calcium carbide. A stirrer attached to the ladle cover is used to mix the carbide into the hot metal. Once desulfurization is complete, slagging is performed at the ladle before the ladle of hot metal is transferred to the induction holding furnace.

The hot metal from the ladle is poured into the treating ladle containing magnesium alloys to produce ductile iron. The capacity of the treating ladle containing the magnesium alloys is approximately 5 tons.

The ductile iron is inoculated with ferrosilicon as it is poured from the treating ladle to a 20 ton pouring ladle. An overhead crane transports the pouring ladle to a rest station where slags are removed from the surface of the iron. The ladle is then positioned to pour the ductile iron into one (1) of three (3) casting units: No. 9 unit and two (2) large casting units.

No. 9 casting unit shakeout is performed by the Herman Molding Apparatus located in the main foundry building. The large castings are processed through the burn-off operation to remove risers, runners, and excess iron. The molds/castings returned to the Herman Molding Machine from the cooling loop are shaken loose from the mold flask and the casting, core, and greensand are dumped onto a conveyor system. Recovered greensand is sent to the greensand mold system. The castings and core butts are sent to the casting handling area. Castings are then cleaned, machined, and coated.

Brass Foundry

Melting is performed in two (2) 1,000 pound electric induction furnaces. Raw materials include brass ingot, brass scrap (recovered risers), alloys, and flux. The molten brass is transferred into a pouring ladle and then poured into set-up molds. The brass casting is

transferred to the tumble blast machines in which shot blasts are used to polish the castings. Castings are then machined and coated.

E. INSPECTION NARRATIVE

The inspection team arrived at U.S. Pipe at approximately 9:00 a.m. on January 31, 2002, for the unannounced inspection. We were met by Mr. Dennis Urbaniak, Project Engineer and Gregg A. Creehan, Plant Engineer. Credentials were presented to Mr. Urbaniak during the opening conference. The purpose of the inspection and logistical details were then discussed, followed by company personnel providing an overview of plant operations. After the overview discussion, the team was taken on a tour of the facility. The inspection concluded at about 4:00 on January 31, 2002. Mr. Jim Swafford, Production Superintendent and Mr. Stuart Box, General Foundry Superintendent also attended the closeout meeting.

F. SITE TOUR

1. Melting Facility

The cupola (E002) has a 78 inch diameter and has approximately a 35 ton per hour melt capacity. Raw materials include metallic scrap, coke, lime, stampings (steel scrap), and returns. Particulate emissions from the cupola are controlled by a baghouse (CD002). Carbon monoxide (CO), volatile organic compounds (VOC), and volatile organic hazardous air pollutants (VOHAPs) emissions from the cupola are controlled by an afterburner (CD001) which is located upstream from the baghouse. A canopy hood over the cupola captures and sends emissions to the baghouse. The canopy hood does not extend to the holding ladle.

The cupola is located at the melting building which is partially enclosed under a roof. Once a charge is melted, the molten gray iron flows from the cupola through runners to a 15 ton holding ladle. As the molten iron flowed from the runners to the ladle, a significant amount of black visible emissions were observed escaping from under the roof to the atmosphere. The visible emissions appeared to be greater than 30 percent opacity and lasted several minutes. Conditions were not favorable for a Method 9 reading. The visible emissions were observed on two (2) separate occasions during the day, once in the morning and once in the afternoon. To keep a ladle hot, the ladle will undergo a process called "blackening." Blackening is where carbon is added to the ladle prior to receiving molten iron. Once the ladle is full, it is transported to the treating building via a lift truck for the desulfurization process.

2. Cupola Baghouse (CD002)

The cupola baghouse is a positive pressure shaker type baghouse and is located beside the melting facility. The baghouse was constructed in 1977 and consists of 1,260 bags. The bags were replaced last month and approximately two (2) years before that. At the time of the inspection, the magnehelic pressure drop reading was 6.0 inches of water. The pressure drop range established in the permit is 2 to12 inches of water.

The duct from the cupola to the baghouse in a joint just prior to the baghouse was observed to be leaking during the inspection. Also, compartments 10, 11, and 12 of the baghouse were observed to be leaking in the morning. U.S. Pipe personnel were notified so that corrective action could be taken. In the afternoon, compartment 11 was still leaking and compartment 3 had begun to leak.

3. Sand Screening Drum (Included with Emission Point 120)

The sand screening drum is controlled by the sand screening drum cyclones (CD009). However, a significant amount of emissions were observed escaping from a large window located on the side of the building housing the sand screening drum. The opacity during the inspection appeared to be approximately 20 percent, however, conditions were not favorable for a Method 9 reading. The inside of the building contained a significant amount of visible emissions. The permit limits emissions from buildings to five (5) percent opacity for an aggregate of five (5) minutes in one hour.

4. Isocure Core System (Emission Point 123)

Triethylamine emissions from the isocure process are vented to the packed bed tower acid scrubbers. The operating pH for the scrubbers established in the permit is 5.0 or less. At the time of the inspection, the pH was 4.28.

A street sweeper was being cleaned with an air blower outside the isocure core room. A significant amount of fugitive dust was being generated.

5. Cut-off and Pedestal Grinders Baghouse (CDV03)

The cut-off and pedestal grinders baghouse pressure drop range established in the permit is 0.2 to 5 inches of water. The magnehelic pressure drop reading at the time of the inspection was 1.0 inches of water.

6. Brass Tumble Blast Baghouse (CDV02)

The brass tumble blast baghouse pressure drop range established in the permit is 1.5 to 5 inches of water. The magnehelic pressure drop reading at the time of the inspection was 0.5 inches of water. It appeared that the pressure gauge was not operating since there was no effect when U.S. Pipe personnel removed the tubing to the gauge. The gauge was not operating in September 2001, during the Air Pollution Control Bureau inspection. U.S. Pipe personnel later reported that the pressure drop gauge had been replaced and the pressure drop reading was now 3.0 inches of water.

7. Brass Furnace Baghouse (CDV01)

The brass furnace baghouse pressure drop range established in the permit is 2 to 5 inches of water. The magnehelic pressure drop reading at the time of the inspection was 4.3 inches of water.

8. Rotoblast Baghouse (CDV08)

The rotoblast baghouse pressure drop range established in the permit is 2 to 9 inches of water. The magnehelic pressure drop reading at the time of the inspection was 8.0 inches of water.

9. Airblast Baghouse (CDV10)

The airblast baghouse pressure drop range established in the permit is 2 to 5 inches of water. The magnehelic pressure drop reading at the time of the inspection was 6.0 inches of water. However, the airblast operation was not operating at the time of the inspection. Also, the sleeve that drops the contents from the baghouse to the hopper (barrel) does not reach the hopper.

10. Greensand Preparation Baghouse (CDV04)

The greensand preparation baghouse pressure drop range established in the permit is 0.2 to 5 inches of water. The magnehelic pressure drop gauge was not operating at the time of the first observation. The tubing to the gauge appeared to be split and so U.S. Pipe personnel cutoff the split end of the tubing. After the tubing was replaced on the gauge, the pressure drop reading was 0.6 inches of water.

11. FBE Rotoblast Barrels Baghouse (CD048)

The FBE rotoblast barrels baghouse pressure drop range established in the permit is 1.5 to 5 inches of water. The magnehelic pressure drop reading at the time of the inspection was 2.2 inches of water.

12. FBE Airblast Cleaner Baghouse (CD049)

The FBE airblast cleaner baghouse pressure drop range established in the permit is 2 to 9 inches of water. The magnehelic pressure drop gauge could not be located on the baghouse.

13. No. 9 Casting Automatic Cleaner Baghouse (CD007)

The number 9 casting automatic cleaner baghouse pressure drop range established in the permit is 2 to 8 inches of water. The magnehelic pressure drop reading at the time of the inspection was 2.4 inches of water.

14. No. 9 Casting Cooler Conveyor Baghouse (CD047)

The number 9 casting cooler conveyor baghouse pressure drop range established in the permit is 2 to 5 inches of water. The magnehelic pressure drop reading at the time of the inspection was 6.0 inches of water.

15. Monorail & 8" Tableblast Baghouse (CD008)

The monorail and tableblast baghouse pressure drop range established in the permit is 2 to 7 inches of water. The magnehelic pressure drop reading at the time of the inspection was 6.0 inches of water. Also, the sleeve that drops the contents from the baghouse to the hopper does not reach the hopper. The contents were observed blowing up into the air.

16. Ductile Treating & No. 9 Unit Shakeout Baghouse (CD003)

The monorail and tableblast baghouse pressure drop range established in the permit is 2 to 7 inches of water. The magnehelic pressure drop reading at the time of the inspection was 3.5 inches of water.

17. Sand Transfer Baghouse

The sand transfer baghouse is not identified in the permit. There was no magnehelic pressure drop gauge on the baghouse.

18. Large Casting Rotoblast Baghouse (CD005)

The large casting rotoblast baghouse pressure drop range established in the permit is 2 to 8 inches of water. The magnehelic pressure drop reading at the time of the inspection was 5.0 inches of water.

19. Induction Holding Furnaces (Emission Unit 105)

A significant amount of visible emissions were observed to be exiting through vent fans on each end of the building that houses the induction holding furnaces. Visible emissions were observed exiting through the fans in the morning and the afternoon. The visible emissions appeared to be approximately 20 percent, but ceased after several minutes in the afternoon. Condition 6.0, Conditions Applicable to the Entire Facility, of the permit limits visible emissions from buildings to five (5) percent opacity for an aggregate of five (5) minutes in one hour.

Records Review

Condition 7.3, Conditions Applicable to the Entire Facility, of the permit requires that a daily log be kept for each baghouse differential pressure reading. These records were incomplete since September 2001.

Condition 10.0, Emission Unit 102, of the permit requires the cupola afterburner to maintain a temperature between 1,100 and 1,600 degrees Fahrenheit during melting operations. Strip chart records indicate that the temperature fluctuates outside of the established range.

G. INSPECTION RESULTS

1. The cupola is located at the melting building which is partially enclosed under a roof. Once a charge is melted, the molten gray iron flows from the cupola through runners to a 15 ton holding bottle (ladle). As the molten iron flowed from the runners to the ladle, a significant amount of black visible emissions were observed escaping from under the roof into the atmosphere. The visible emissions appeared to be greater than 30 percent opacity and lasted several minutes. The visible emissions were observed on two (2) separate occasions during the day, once in the morning and once in the afternoon.

2. The duct from the cupola to the baghouse in a joint just prior to the baghouse was observed to be leaking. Also, compartments 10, 11, and 12 of the baghouse were also

observed to be leaking in the morning. In the afternoon, compartment 11 was still leaking and compartment 3 had begun to leak.

3. The sand screening drum is controlled by the sand screening drum cyclones (CD009). However, a significant amount of visible emissions were observed escaping from a large window located on the side of the building housing the sand screening drum. The opacity during the inspection appeared to be approximately 20 percent, however, conditions were not favorable for a Method 9 reading. The permit limits emissions from buildings to five (5) percent opacity for an aggregate of five (5) minutes in one hour.

4. A street sweeper was being cleaned with an air blower outside the isocure core room. A significant amount of fugitive dust was being generated during the cleaning.

5. The brass tumble blast baghouse pressure drop range established in the permit is 1.5 to 5 inches of water. The magnehelic pressure drop reading at the time of the inspection was 0.5 inches of water. It appeared that the pressure gauge was not operating since there was no effect when U.S. Pipe personnel removed the tubing to the gauge. The gauge was not operating in September 2001, during the Air Pollution Control Bureau inspection. U.S. Pipe personnel later reported that the pressure drop gauge had been replaced and the pressure drop reading was now 3.0 inches of water.

6. The airblast baghouse pressure drop range established in the permit is 2 to 5 inches of water. The magnehelic pressure drop reading at the time of the inspection was 6.0 inches of water. However, the airblast operation was not operating at the time of the inspection. Also, the sleeve that drops the contents from the baghouse to the hopper (barrel) does not reach the hopper.

7. The FBE airblast cleaner baghouse pressure drop range established in the permit is 2 to 9 inches of water. The magnehelic pressure drop gauge could not be located on the baghouse.

8. The number 9 casting cooler conveyor baghouse pressure drop range established in the permit is 2 to 5 inches of water. The magnehelic pressure drop reading at the time of the inspection was 6.0 inches of water.

9. The sleeve that drops the contents from the monorail and tableblast baghouse to the hopper does not reach the hopper. The contents were observed blowing up into the air.

10. The sand transfer baghouse pressure drop range is not identified in the permit. There was no magnehelic pressure drop gauge on the baghouse.

11. A significant amount of visible emissions were observed to be exiting through vent fans on each end of the building that houses the induction holding furnaces. Visible emissions

were observed exiting through the fans in the morning and the afternoon. The visible emissions appeared to be approximately 20 percent, but ceased after several minutes in the afternoon. Condition 6.0, Conditions Applicable to the Entire Facility, of the permit limits visible emissions from buildings to five (5) percent opacity for an aggregate of five (5) minutes in one hour.

12. Condition 7.3, Conditions Applicable to the Entire Facility, of the permit requires that a daily log be kept for each baghouse differential pressure reading. These records were incomplete since September 2001.

13. Condition 10.0, Emission Unit 102, of the requires the cupola afterburner to maintain a temperature between 1,100 and 1,600 degrees Fahrenheit during melting operations. Strip chart records indicate that the temperature fluctuates outside of the established range.

cc: Errol Reksten, Chattanooga-Hamilton County Air Pollution Control Bureau

Chatt. V - Upset Report

RECEIVED
DEC - 3 1973
ENGINEERING DEPT.
REFERRED
SANDERS

UNITED STATES PIPE AND FOUNDRY COMPANY

P. O. DRAWER 311

CHATTANOOGA, TENNESSEE 37401

November 29, 1973

Chattanooga-Hamilton County
Air Pollution Bureau
3511 Rossville Boulevard
Chattanooga, Tennessee 37407

Attention: Mr. Robert W. Bond

Gentlemen:

At approximately 12:15 P.M. an upset condition was observed in the Pneumatic Sand Transport System #1 (location code 38F, Operating Permit No. 312300111) and at approximately 1:45 P.M. a similar condition was observed on the Aerodyne Pneumatic Sand Transporter #2 (location code 41F, Operating Permit No. 31330016T).

At both locations sand was being blown out around the doors of the vent filters.

This was found to be caused by overfilling of the storage tank and silo, causing sand to be forced out around the doors. The overfilling was caused by an electrical failure of the high level probes so that a full indication was not given.

Repairs are underway and should be completed today.

Yours truly,

UNITED STATES PIPE AND FOUNDRY COMPANY

Jim Moore,
Project Engineer

JM:gjp

MWPS012150

FILE

UNITED STATES PIPE AND FOUNDRY COMPANY

Engineering Department
October 25, 1972

MEMORANDUM FOR RECORD

Subject: PROJECT ~~5817~~ 6850 - AIR POLLUTION - TENNESSEE

A meeting was held at the Chattanooga Valve and Fittings Plant to coordinate metal transfer operations and iron requirements and to determine an approach to be taken regarding control of air contaminant emissions from ductile treating at the Valve and Fittings Plant. Persons in attendance were:

Chattanooga Valve & Fittings Plant - T. A. Deakins
W. J. Cain
Jim Goodlet
Jerry Simmons

Chattanooga Soil Pipe Plant - G. B. Scanland
Reese Hartman
Ray Sims
Jim Blake

Burlington Research - Marty Rice

General Office - J. D. McGill
R. C. Wetzel
John Fay
Mac Luna
Ron Sanders

After a lengthy discussion of other subjects of concern, the ductile treating problem was discussed. The situation was reviewed historically up to and including the decision not to obtain a permit to operate the mag-coke treating operation. The main point of discussion was whether to report to the Bureau the fact that mag-coke treating has not been ceased or to let the Bureau contact the plant first if they intend to. The later choise was selected, but with the understanding that a plausible explanation of the delay be developed to include a plan for compliance. Concurrently, G. O. Engineering has been requested to design the necessary control system and prepare a job paper. The compliance schedule is to include two phases: 1. Installation of desulfurizing facilities and change-over to sil-mag or re-mag ductile treating; and 2. Installation of required controls. Completion of control equipment installation is to

be extended to the date for meeting 20% opacity (R#1) or July 1, 1974, with the understanding that the Bureau may require earlier compliance. The approach to be taken with the Bureau and the compliance scheduled is to be developed by G. O. Engineering.

It was generally agreed by the group that the emissions from the mag-coke operation are extremely bad. Addition of the new facilities and switching to sil-mag or re-mag is expected to relieve the problem, but not expected to meet the 20% opacity requirement in 1974 and quite likely not meets the 40% opacity control now in effect. Consequently, the decision to proceed immediately.

Ron Sanders

H. R. Sanders

HRS/rdm

cc: Messrs. R. B. Wilson - C.C. Pierce
O. S. Cooper - C. M. Luna
J. D. McGill, Jr.
T. A. Deakins - J. Simmons

RECEIVED

SEP 13 1973

ENGINEERING DEPT.
REFERRED
Sanders

UNITED STATES PIPE AND FOUNDRY COMPANY

P. O. DRAWER 311

CHATTANOOGA, TENNESSEE 37401

September 11, 1973

Chattanooga-Hamilton County
Air Pollution Control Bureau
3511 Rossville Boulevard
Chattanooga, Tennessee 37407

Attention: Mr. John Morse

Gentlemen:

The enclosed check in the amount of $1,162.50 is to cover renewal of certificates of operation for the following listed equipment located in the U. S. Pipe and Foundry Company General Foundry and Valve Plant. The amount enclosed covers a period of fifteen months of operation bringing the next renewal date to January 11, 1975.

General Foundry:

Item	Description
3F	Pangborn Rotoblast Table Type LK-1
5F	4 Grinding Booths in #2 Cleaning Shed
7F	2 Grinding Booths in #2 Cleaning Shed
9F	Swing Frame Grinder in #2 Cleaning Shed
11F	Carpenter Shop Equipment
13F	Pattern Shop Equipment
15F	(2) Coleman Transtrack Core Ovens
16F	(2) Coleman Transtrack Core Ovens
17F	Pangborn 8' Rotoblast Table, Type LK-1
19F	Cleaning System "A"
21F	(2) Swing Frame Grinders in #1 Cleaning Shed
23F	Cleaning System "B"
25F	Cleaning System "C"
27F	Cleaning System "D"
29F	(3) Pangborn No. 34 Type GN Rotoblast Table
31F	No. 9 Unit
34F	No. 4 Unit
35F	Shell Sand Coating System
36F	Binks Water Wash Paint Spray Booth
37F	Booth Pneumatic Sand Transporter
38F	Aerodyne Pneumatic Sand Transporter #2

MWPS012153

Chattanooga-Hamilton County
Air Pollution Control Bureau
September 11, 1973

Valve Plant

Item	Description
7-22-23-24	Four (4) Pedestal Grinders-Cincinnati Mod HEA
11-14	Shell Molding Machine, Shalco Mod DSM-3, SN1504 and Cooling Exhaust System
13	Bronze Melting Furnace, Inductotherm Mod. VIP 1 40 SN 69F600
15	Shell Sand Mold Pouring Bed
25	Binks Water Wash Spray Booth, Mod. WE-8-10-T
26	Binks Water Wash Spray Booth Mod. WE-8-10-T
27	Binks Filter Spray Booth Mod FF-10-8-T

Yours truly,

UNITED STATES PIPE AND FOUNDRY COMPANY

Jim Moore

Jim Moore,
Project Engineer

JM:gjp

CC: Mr. T. A. Deakins
Mr. Ron Sanders
Mr. Max Greer

UNITED STATES PIPE AND FOUNDRY COMPANY – SPEED LETTER

TO Albert Hicks ADDRESS Chatt. Soil Pipe Plant

SUBJECT: Attached are penciled applications for renewal of permits for those items located at CSP. Most of the items listed in Dr. Lents letter are at the V&F Plant. A draft letter is also attached covering this point. Please send me copies of the final typed, signed forms as submitted.

I put your name as the company official to contact. If this is not agreeable with your desires, please change it.

Before submitting the forms, please check the sources covered to determine that no major changes affecting process rates or emissions have occurred.

FROM Ron Sanders ADDRESS G.O. Engr. DATE 8/22/73

REPLY: TO _____ ADDRESS _____

FROM _____ DATE _____

SENDER'S COPY–DETACH AND RETAIN

MWPS012155

Chattanooga-Hamilton County
Air Pollution Control Bureau

3511 ROSSVILLE BOULEVARD
TELEPHONE 615-629-2516

CHATTANOOGA, TENNESSEE
37407

August 13, 1973

RECEIVED
AUG 15 1973
ENGINEERING DEPT.

Mr. Nolen
U. S. Pipe & Foundry Company
P. O. Box 6129
Chattanooga, Tennessee 37401

Dear Sir:

The permits listed below will expire on Oct. 15, 1973. Please complete the enclosed renewal application(s). One application must be filed for each permit. Be careful to fill them out clearly since the applications you are filling out will become your permit.

Your permits are presently being prorated (that is the expiration date adjusted) so that all of your permits will expire on the same date. This should make the renewal process easier both on us and you. This means that your fee may be more or less than the normal annual fee since this permit may be for more or less than 12 months. Thus, for this one renewal please do not enclose any fees. Your fees will be determined by the Bureau and you will be notified.

Sincerely,

James M. Lents, Ph.D.
Manager, Technical Division

35800002C	35700001C	35775012C	35775039C
35800004C	35700052C	35775015C	35775043C
35800006C	35700053C	35775017C	35775045C
35800010C	35775002C	35775019C	35775053C
35800012C	35775004C	35775023C	35775099C
35800014C	35775006C	35775028C	35775109C
35800017C	35775007C	35775032C	35775110C
35800026C	35775009C	35775035C	35775111C

JML/da

Enclosure

UNITED STATES PIPE AND FOUNDRY COMPANY
P. O. DRAWER 311
CHATTANOOGA, TENNESSEE 37401

August 15, 1973

RECEIVED
AUG 17 1973
ENGINEERING DEPT.
REFERRED
Sandra

Chattanooga-Hamilton County
Air Pollution Control Bureau
3511 Rossville Boulevard
Chattanooga, Tennessee 37407

Attention: Mr. Robert W. Bond

Gentlemen:

The enclosed applications cover renewal of certificate of operation for the following listed equipment located in the U. S. Pipe and Foundry Company General Foundry and Valve Plant.

General Foundry:

Item	Description
3F	Pangborn Rotoblast Table Type LK-1 (35775002 C)
5F	4 Grinding Booths in #2 Cleaning Shed (35775012 C)
7F	2 Grinding Booths in #2 Cleaning Shed (35775015C)
9F	Swing Frame Grinder in #2 Cleaning Shed (35775017C)
11F	Carpenter Shop Equipment (35775053C)
13F	Pattern Shop Equipment (35775045C)
15F	(2) Coleman Transtrack Core Ovens (35775099C)
16F	(2) Coleman Transtrack Core Ovens (35775109C)
17F	Pangborn 8' Rotoblast Table, Type LK-1 (35775009C)
19F	Cleaning System "A" (35775032C)
21F	(2) Swing Frame Grinders in #1 Cleaning Shed (35775035C)
23F	Cleaning System "B" (35775019 C)
25F	Cleaning System "C" (35775023C)
27F	Cleaning System "D" (35775028 C)
29F	(3) Pangborn No. 34 Type GN Rotoblast Table (35775004C)
31F	No. 9 Unit (35775039C)
34F	No. 4 Unit (35775110C)
35F	Shell Sand Coating System (35775006C)
36F	Binks Water Wash Paint Spray Booth (35775043C)
37F	Booth Pneumatic Sand Transporter (35775007C)
38F	Aerodyne Pneumatic Sand Transporter (35775111C)

MWPS012157

Chattanooga-Hamilton County
Air Pollution Control Bureau
August 15, 1973

Valve Plant

Item	Description
7-22-23-24	Four (4) Pedestal Grinders-Cincinnati Mod HEA (35700010C)
11-14	Shell Molding Machine, Shalco Mod DSM-3, SN1504 and Cooling Exhaust System (35700035C
13	Bronze Melting Furnace, Inductotherm Mod. VIP 1 40 SN 69F600 (35700006C
15	Shell Sand Mold Pouring Bed (35700038C)
25	Binks Water Wash Spray Booth, Mod. WE-8-10-T (
26	Binks Water Wash Spray Booth Mod. WE-8-10-T
27	Binks Filter Spray Booth Mod FF-10-8-T

It is my understanding that to make all of our permits come due in the month of March, that renewal fees will be prorated to cover the time period from October to March and that you will advise me as to what the prorated fees will be.

Yours truly,

UNITED STATES PIPE AND FOUNDRY COMPANY

Jim Moore,
Project Engineer

JM:gjp

CC: Mr. T. A. Deakins
Mr. Ron Sanders ✓
Mr. Max Greer

July 27, 1973

RECEIVED
JUL 30 1973
ENGINEERING DEPT.
REFERRED

Chattanooga-Hamilton County
Air Pollution Control Bureau
3511 Rossville Boulevard
Chattanooga, Tennessee 37407

Attention: Mr. Robert Bond

Gentlemen:

In accordance with your request to revise our permit applications of July 24, 1973, I am submitting new Forms E001 to cover the following:

1. Installation and Temporary Operating Permits for the Pangborn 10' Rotoblast table and collector.

2. Installation and Temporary Operating Permits for the Aerodyne Pneumatic Sand Transporter System No. 2.

3. Operating Certificate for the Binks Paint Spray Booth (Code 39F).

4. Installation and Temporary Operating Permits for the Binks Paint Spray Booth (Code 40F).

Enclosed is a check in the amount of $240.00 covering the total fees for the above items.

Very truly yours,

UNITED STATES PIPE AND FOUNDRY COMPANY

James B. Grant,
Project Engineer

JBG:gip

CC: Mr. T. A. Deakins
Mr. H. R. Sanders
Mr. Max Greer

RECEIVED

JUL 25 1973

ENGINEERING DEPT.
REFERRED
SANDERS

July 24, 1973

Chattanooga-Hamilton County
Air Pollution Control Bureau
3511 Rossville Blvd.
Chattanooga, Tennessee 37407

Gentlemen:

Please modify the existing Certificate of Operation Number 35775111C (Aerodyne Pneumatic Sand Transporter) as follows:

A. A second transporter will be added at the number one position as shown on U. S. Pipe & Foundry Drawing No. 250A-25064 (A-2153-CH). The original transporter will be relocated at the number two position as shown on the same drawing.

B. A new form APCB-4 is being submitted to include the new arrangement.

C. General location, operating schedule, drawings of equipment, and other pertinent data will remain unchanged.

Also enclosed is the application for an Operating Certificate for the Binks Water Wash Paint Spray Booth, now covered by Temporary Operating Permit No. 35775150T.

The third item is the application for an Installation Permit for an additional Binks Water Wash Permit Spray Booth.

The fourth item is the application for Certificate of Operation for our Pangborn 10' Rotoblast Table. This was covered by Temporary Operating Permit No. 35700050T. This permit was allowed to expire in 1972 because the Rotoblast Table was not in use and was scheduled to be relocated. We have decided to use it in the present location as described in the original permit.

Please advise us of the fees covering the above items.

Very truly yours,

UNITED STATES PIPE AND FOUNDRY COMPANY

James B. Grant,
Project Engineer

JBG:gjp

CC: Mr. T. A. Deakins
Mr. H. R. Sanders

MWPS012160

Proj 6 & 0 - Correspondence

March 15, 1973

Chattanooga-Hamilton County
Air Pollution Control Bureau
3511 Rossville Blvd.
Chattanooga, Tennessee 37407

Attention: Mr. Jim Lents

Gentlemen:

As we discussed today, please combine the permits for the Rotoblast #686 (35700044) and the Rotoblast #688 (35700004) into one permit unit (35700004). The new permit will then expire on March 20, 1974.

Annual renewal has been submitted for Rotoblast #686. The permit for Rotoblast #688 expires on October 19, 1973. The fee for extending Rotoblast #688 until March 20, 1974 will be $10.00. The enclosed check is submitted for this extension.

Very truly yours,

UNITED STATES PIPE & FOUNDRY COMPANY

James B. Grant,
Project Engineer

JBG:gjp

CC: Mr. T. A. Deakins
Mr. Ron Sanders
Mr. Max Greer

FILE

UNITED STATES PIPE AND FOUNDRY COMPANY

Engineering Department
March 12, 1973

MEMORANDUM FOR RECORD

Subject: PROJECT 6850 - AIR EMISSION SOURCE INSPECTION

An inspection of air emission sources at the Chattanooga Valve & Fittings Plant was conducted on March 12, 1973, by the Chattanooga-Hamilton County Air Pollution Control Bureau. Representing the Bureau were Messrs. Mike Barbree and Jim Wyler. U. S. Pipe personnel present were Messrs. Jim Grant, Valve & Fittings Plant, and Ron Sanders, General Office Engineering. The purpose of the inspection was to check out various sources with respect to requests for renewal of Operating Permits and a Temporary Operating Permit for the following items:

Temporary Operating Permit

1. Binks Water Wash Paint Spray Booth (Installation Permit No. 35775150I)

Renewal of Operating Permit

2. Item 10 - Abrasive Blasting Facility
3. Item 16 - Bronze Melting Oil Fired Furnace
4. Item 16A - Bronze Melting Oil Fired Furnace
5. Item 17 - Lead Melting Furnace
6. Item 18 - Core Oven, Gas Fired
7. Item 19 - Rotoblast #686
8. Item 20 - Green Sand Preparation System

The inspection team arrived at 1400 hours and was shown the various items of equipment. They had no adverse comments about any of the systems and seemed pleased. Mr. Barbree did ask if the brass turnings and chips from machining which are coated with machining oil were charged to the furnaces and if so was the oil burned off first. He was told that if the turnings were reused that they were not precleaned and any smoke generated would be collected by the bag collector serving the furnaces.

Mr. Barbree and the Bureau are quite concerned over the number of permits to be renewed in October. He used the number 6,000. It is their wish to spread these out over the year and to also get all of an individual plant's permits on the same anniversary. In our case, they would like to get them all in March. To effect this change, the Bureau will return within the next two weeks to inspect the remainder of the permitted operations at the Valve & Fittings Plant. After this inspection, a method will be devised for changing the anniversary dates.

It was noted that the two Rotoblast Barrels are connected to the same collector, but have separate permits. Such interconnected items are considered one unit and are covered with one permit. The plant will be notified by letter regarding consolidation of these items.

In regard to visible emissions at the Valve & Fittings Plant, Mr. Barbree noted as we walked back to the Fittings Plant from the Valve Plant, that visible emissions were coming from the vicinity of the General Castings Building. He indicated that these emissions and others he had noted were pretty bad and that if they were coming from a stack instead of from points all over the building, that we would probably be in violation. It is not known whether he meant that the emissions were diffused or that they don't read emissions which don't come from a stack. Mr. Barbree had asked J. Grant earlier what operations were housed in the General Castings Building. Jim told him that we poured the fittings there and held iron in the area. He also stated that quite a bit of steam is generated when castings are poured.

During the discussion of visible emissions they asked where the yellow dust was coming from and stated that we would probably have to do something about it.

After the inspection team left, J. Grant and the writer investigated the source of the emissions which had been noted earlier. The primary source was the Shell Core Sand Coating System. The wind was from the west and was blowing the sand fines across the track area. Some emissions were also coming from the iron treating areas due to lancing of the inlet to the induction furnace due to build-up. No ductile was being produced and pouring had not started on the No. 4 line.

During the inspection of the Brass Foundry, the writer noted considerable emissions coming from the stack serving the Shell Core Mold pouring line. The inspection team was kept in such a position that they couldn't see the emissions, but this source may be a future problem area.

Overall the items inspected met with the inspectors satisfaction, but there is no doubt that they are aware of the visible emissions and their general origin.

Sanders

H. R. Sanders

HRS/rdm
cc: Messrs. R. B. Wilson - C. C. Pierce
J. D. McGill, Jr.
T. A. Deakins - Jerry Simmons
Jim Grant

FORM E001

BASIC APPLICATION FOR EQUIPMENT / AIR POLLUTION PERMIT*

1. Name of Company U. S. PIPE & FOUNDRY COMPANY 2. SIC Code: _____

3. Company Official to Contact James L. Smallwood 4. Phone No: 265-4611

5. Mailing Address for Line 3: 2701 Chestnut St., Chattanooga, Tenn. 37408
Street City State Zip Code

6. Company Address
(if different from line 5): _____
Street City Zip Code

7. Application for:

- [ ] Installation Permit
- [ ] Certificate of Operation (Initial Application)
  Temp. Operating Permit No.: _____
- [ ] Temporary Operating Permit
  Instal. Permit No.: _____
- [X] Certificate of Operation (Renewal)
  Certificate of Operation _____

8. Type of equipment for which application is made:

- [X] Process Equipment (Submit Form E010; [ ] Already Submitted)
- [ ] Fuel Burning Equipment (Submit Form E011; [ ] Already Submitted)
- [ ] Incineration Equipment (Submit Form E012; [ ] Already Submitted)
- [ ] Odor or Miscellaneous (Specify) _____ (Submit Form E013; [ ] Already Submitted)
- [ ] Minor Pollution Source—less than 1000 lbs / year and 10 lbs / day total uncontrolled contaminant emissions (Submit Form E014; [ ] Already Submitted)

9. The following forms are filed with this application: _____

10. Equipment Name: No. 9 Unit

11. If Application is for a Temporary Operating Permit or Certificate of Operation (Initial or Renewal) are there any changes since previous application in the equipment or operational procedures which <u>might:</u>

A) Increase, decrease, or alter process materials, fuel, refuse type, etc.
[ ] YES [X] NO

B) Increase, decrease, or alter emissions or emission points
[ ] YES [X] NO

(If either answer is YES, new forms E010, E011, E012, E013, or E014 and associated forms must be filed with this application.)

* Form must be completely filled out before it is acceptable.

12. Process Weight, lb/hr, (Item 7 on Form E010). Incineration Rate, lbs/hr, (Item 7 on Form E012), or Fuel Burning Rate, 1000 BTU/hr, (Item 5C on Form E011):

448,920

13. Permit Fee: _____

Installation Permit Fee (See Appendix B in revised permit manual)
Temporary Operating Permit Fee: $15.00
Certificate of Operation–Initial Fee (See Appendix B in revised permit manual)
Certificate of Operation–Renewel Fee (See Appendix B in revised permit manual)
Certificate of Operation–Minor source Fee: $5.00

This is to certify that I am familiar with operations concerning this equipment and the information provided on this application is true and complete to the best of my knowledge:

Mail To:
CHATTANOOGA–HAMILTON COUNTY
AIR POLLUTION CONTROL BUREAU
3511 Rossville Boulevard
Chattanooga, Tennessee 37407

Company Official: J. Hallard
Signature

Title: Plant Engineer

Date: May 27, 1976

DO NOT WRITE BELOW THIS LINE

_____ Engineer or Investigator Approval Date Inspected: _____

_____ Reviewed by Supervisor

_____ Check Received. Amount _____ Check Number _____

_____ Entered into tape file and state keypunch form filed

_____ Registered in Suspense File

Special conditions imposed: _____

Expiration Date: _____ Permit Number: _____

Approved By: _____
Director

Date: _____

MWPS012165

Sub: Estimated quantities of B.H. dust - Chatt. Plants

Prior data:

CV&F - 440 TPY (37/mo.) based upon 51,571 TPY melting (Cal. yr. 1980)

CSP - 300 TPY (25/mo.) based upon 34,424 TPY melting (Fiscal yr. 81)

Note: above based upon 17# dust per ton metal melted

Current data: (As of Aug. 84!)

Current melting rates: CV&F - 40,800 TPY (3400/mo.)
(Per Jim Smallwood - Aug 84)

CSP - 67,535 TPY (5628/mo.)
(Per John Pike - Aug 84 for July 1, 83 thru Jun 84)

∴ Est. baghouse dust quantities are:
(Bulk Density = 23#/ft.³ = 0.31 Tons/yd.³)

$$CV\&F = 40{,}800 \times \frac{17}{2000} = \underline{347}\ TPY\ (29/mo.)$$
(1120 yd.³) (94 yd.³/mo.)

$$CSP = 67{,}535 \times \frac{17}{2000} = \underline{574}\ TPY\ (48/mo.)$$
(1852 yd.³) (155 yd.³/mo.)

$$Tot. = 921\ TPY\ (77/mo.)$$
or approx. 3.8 Tons per day
(2971 yd.³)

Note: Wheland foundry estimates their dust generation @ 15-20 Tons/day (from 3 cyclones)

MWPS012166

Test for following:
FeO (+ Fe_2O_3 & Fe)
MnO
CaO
MgO
SiO_2
Al_2O_3
CdO
CrO
PbO
ZnO
CuO
NiO
+ Combustible (Prim. Carbon)
Density (Bulk)

Tech. Labs Inc. (615) 265-4533
Levis Cain

CSP sample: Aug. 2, 84 Bulk Density per Lab = 21.8 #/ft.³ Actual Den. - 191 #/ft.³
CV&F sample: Aug. 3, 84 " " " " = 22.8 #/ft.³ " " - 186 " 3

— Use 23 #/ft.³ for both plants.
or 0.31 Tons/yd.³

21 Grn.

CHEMICAL COMPOSITION OF CUPOLA PARTICULATE EMISSIONS

From A.T. Kearney Report PB198-348 & 349

Foundry Number	Percent by Weight in Cupola Effluent								
	Iron Oxide	Magnesium Oxide	Manganese Oxide	Lead Oxide	Aluminum Oxide (Al_2O_3)	Zinc Oxide	Silicon Dioxide	Calcium Oxide	Combustibles (Coke, Oil, Fabric Coatings Grease)
66	11.1%						12.3%		
85	14.7	1.3%		1.4%			28.7		24.0%
90							56.3	42.0%	0.9
113	8.6		3.7%		.05%		31.8	3.1	27.0
116	10.0	5.0	10.0		5.0	1.0%	10.0	3.0	5.0
146	33.0		1.0	5.0		38.0	20.0	1.0	
150	11.6	1.0	5.5	20.0	1.4	14.7	30.1	1.1	

Note: Quantities as reported. They do not add up to 100%.

EXHIBIT VI-7

Bulk Density of:
Lime (Fine) - 27 #/ft.³
Coke Breeze - 25 to 35
Flue Dust - 35 to 45
Fly Ash - " "
Iron Oxide Pigment - 25
Zinc Oxide (Heavy) - 20 to 35
Alumina (Fine) - 35

MWPS012167

FORM: E102

BAGHOUSE

Air Pollution Control Equipment Data

1. Name of Company (as shown on Line 1, Form E001): U. S. Pipe & Foundry Company

2. Equipment Name (as shown on Line 10, Form E001): Ductile Iron Treating, Desulfurization and No. 9 Unit.

3. Volume of Gas discarged to atmosphere at stack or baghouse conditions
A: 50000 CFM. Volume of Gas discharged to atomsphere at standard conditions: 45690 SCFM.

4. Cloth area of Baghouse, B: 21.180 Sq.Ft.
Air to cloth ratio: (A/B, ~~item 3~~ divided by item 4)
50000 CFM divided by 21,180 Sq.Ft. = 2.364 Ft./Min.

The recommended baghouse air to cloth ratio (range) is:
Conventional Baghouse - Dust: 1.5 ft/min to 3 ft min
Fumes: 1 ft/min to 2 ft min
Reverse Jet Baghouse - 6 ft/min to 16 ft min

5. Pressure Drop across baghouse:
Stated by manufacturer: 3.5 in H_2O
Measured (Actual): _____ in H_2O
Calculated*: (K factor) x (Air to cloth ratio)
(.70) x (2.36 ft/min) = 1.65 in H_2O

Recommended Pressure Drop: Minimu 1.5 in H_2O. Maximum 8 in H_2O.
Measured and/or calculated pressure drop fall outside of recommended range:
[X] NO [ ] YES (If YES contact the Bureau).

*K factor determined from Appendix C in Revised Permit Manual.

6. Bag Material: _____
Maximum bag operating temperature: _____ °F.
Normal bag operating temperature: 120 °F.
Recommended bag operating temperature*: 275 °F.

The recommended temperature is less than maximum and/or normal operating temperature: [X] NO [ ] YES (If YES contact the Bureau)

*Obtain from Appendix C of Revised Permit Manual.

7. Manufacturer's stated efficiency: 99 %

Required efficiency:

$$\frac{(\text{Uncontrolled Emissions})^{*} - (\text{Allowable Emissions})^{**}}{(\text{Uncontrolled Emissions})^{*}} \times 100 = \%\text{Efficiency Reg.}$$

$$\frac{(82.5 + 252.7 \text{ lb/hr}) - (26.4 + 57.63 \text{ lb/hr})}{(335.2 \text{ lb/hr})} \times 100 = 75 \%\ \text{EFF.REG}$$

*Obtain from Item 11 Form E010, Item 11 Form E011 or Item 10 Form E012.
**Obtain from Item 10 Form E010, Item 10 Form E011 or Item 8 Form E012.

8. Incidate which of the following are components of baghouse:

A	Recording instruments for flow rates	[ ] YES	[X] NO
B	Recording instruments for gas temperature	[ ] YES	[X] NO
C	Recording instruments for baghouse temperature	[ ] YES	[X] NO
D	Recording instruments for dew point level	[ ] YES	[X] NO
E	Extra compartment for cleaning baghouse	[X] YES	[ ] NO
F	Burners to bring system to operating temperature	[ ] YES	[X] NO
G	Automatic cleaning device	[X] YES	[ ] NO

9. Fan Data:

TYPE FAN		TYPE BLADE					
Centrifugal	[X]	Forward Curve	[ ]	Backward Curve	[X]	Tub-Axial	[ ]
Axial	[ ]	Vane-Axial	[ ]	Propellor	[ ]	Straight	[ ]

Capacity: Maximum _____ CFM at _____ °F
Actual 50,000 CFM at 70 °F
Static Pressure: 7 in H_2O
Motor H.P.: 150 HP

10. Baghouse operation: Intermittent [ ] Continuous [X]

Dirty Gas Inlet: [ ] Top [ ] Bottom [ ] Tangential

Clean Gas Outlet: [X] Top [ ] Side. Outlet Height above ground: 48 ft.

Baghouse Shape: [X] Rectangular [ ] Cubical [ ] Cylinrical [ ]

Baghouse Size (Volume): 21,200 CuFt

Dust Type(s): Metallic Oxide Particulates, Sand

11. Bag Cleaning Method:

FABRIC FLEXING [X]		REVERSE AIR CLEANING [ ]	
Mechanical shaking and rapping	[ ]	Reverse Jet	[ ]
Manual Cleaning	[ ]	Reverse Flow	[ ]
Sonic Cleaning	[ ]		
Collapse Cleaning	[ ]		
Pulse Cleaning	[ ]		

12. Filter Configuration: [ ] Pannels [X] Tubes [ ] Bags

Filter Length: 19 Ft

Number of Compartments: 6

Number of Filters per Compartment: 60

13. Dust Size Distribution in Microns, μ: (Give % by Weight.)

SIZE	0 - 5μ	5 - 10μ	10 - 20μ	20 - 44μ	Greater than 44μ
%	%	%	%	%	%

% Moisture in Gas Stream: ____%

(Supply the information requested in this box if available).

14. Does Baghouse contain precleaning equipment: [ ] YES [X] NO

If YES, what type: _____ . Fill out applicable form for precleaning equipment indicated.

15. Manufacturer of Baghouse: U. S. Pipe & Foundry Company

Model Number : _____ Cost of Baghouse: Approx. $60,000.

Dust Disposal Method: Discharged into dumpster pans. Hauled to company dump and covered with used foundry sand.

16. Submit Manufacturers Test Data and Specifications.

Submitted with Application [ ] Already Submitted [ ]

This is to certify that I am familiar with operations concerning this equipment and the information provided on this application is true and complete to the best of my knowledge.

Company Official: _____
Signature

Title: Plant Engineer

Date: May 27, 1976

DO NOT WRITE BELOW THIS LINE

_____ Engineer Approval

_____ Entered into tape file and state keypunch from file

This form corresponds to permit number: _____

Special Notations: _____

CV & F — Epoxy Coating — 10.18.84

8 hrs 5 days 50 wks

50 valves / shift.

			paint	
6	- 4"	65 #	1	390
25	- 6"	105	1.5 #	2625
13	- 8"	175	[illegible]	2275
2	- 10"	275	[illegible]	550
5	- 12"	385	2 #	1925
51				7765
				2000

3.9 ton / shift.

use for paint usages: per mike Horton TSP

4"	6	1	—	6
6"	25	1.5	—	37.5
8"	13	2	—	26
10"	2	2.5	—	5
12	5	3.0	—	15
				89.5

≈ 15% average

105 # / 8hr shift

975 TON [illegible] lb/coat
13 26250 lb/paint
988

say 1000 TN/yr paint + coating

MWPS012172

RECEIVED

NOV - 2 1978

ENGINEERING DEPT.
REFERRED

FORM E001

BASIC APPLICATION FOR EQUIPMENT / AIR POLLUTION PERMIT*

1. Name of Company: U. S. Pipe & Foundry Co. 2. SIC Code: 3321

3. Company Official to Contact: Jim Moore 4. Phone No: (615) 265-4611

5. Mailing Address for Line 3: 2701 Chestnut St., Chattanooga, TN. 37408
Street City State Zip Code

6. Company Address (if different from line 5): Same
Street City Zip Code

7. Application for:

[X] Installation Permit

[ ] Certificate of Operation (Initial Application)
Temp. Operating Permit No.: _____

[ ] Temporary Operating Permit
Instal. Permit No.: _____

[ ] Certificate of Operation (Renewal)
Certificate of Operation 3321-30300899-45C

8. Type of equipment for which application is made:

[X] Process Equipment (Submit E010 or Form E010A; [ ] Already Submitted)

[ ] Fuel Burning Equipment (Submit Form E011; [ ] Already Submitted)

[ ] Incineration Equipment (Submit Form E012; [ ] Already Submitted)

[ ] Odor or Miscellaneous (Specify) _____ (Submit Form E013; [ ] Already Submitted)

[ ] Minor Pollution Source—less than 1000 lbs / year and 10 lbs / day total uncontrolled contaminant emissions (Submit Form E014; [ ] Already Submitted)

9. The following forms are filed with this application: E010, E103, E106

10. Equipment Name: Unit No. 9 - Sand handling and preparation and shake-out. Installation of Control Equipment

11. If Application is for a Temporary Operating Permit or Certificate of Operation (Initial or Renewal) are there any changes since previous application in the equipment or operational procedures which might:

NA

A) Increase, decrease, or alter process materials, fuel, refuse type, etc.
[ ] YES [ ] NO

B) Increase, decrease, or alter emissions or emission points
[ ] YES [ ] NO

(If either answer is YES, new forms E010, E011, E012, E013, or E014 and associated forms must be filed with this application.)

* Form must be completely filled out before it is acceptable.

MWPS012173

12. Process Weight, lb/hr, (Item 6 on Form E010), Incineration Rate, lbs/hr, (Item 3C on Form E012), or Fuel Burning Rate, 1000 BTU/hr,(Item 7C on Form E011):

460,000 lb./hr.

This is to certify that I am familiar with operations concerning this equipment and the information provided on this application is true and complete to the best of my knowledge:

Mail To:
CHATTANOOGA-HAMILTON COUNTY
AIR POLLUTION CONTROL BUREAU
3511 Rossville Boulevard
Chattanooga, Tennessee 37407

Company Official: Jim Hallard
Signature

Title: Plant Engineer

Date: July 28, 1978

DO NOT WRITE BELOW THIS LINE

N/C Permit Fee

MEA Inspection Approval ~~Date Inspected~~:

CER Reviewed by Supervisor

JK Check Received. Amount N/C Check Number N/C

FD Entered into tape file and state keypunch form filed

DR Registered in Suspense File

SPECIAL CONDITIONS IMPOSED:

Expiration Date: Installation must Begin By 8-8-79

Permit Number: 3321-30300899-45I

Approved By: H. L. Parr
Director

Date: AUG 9 1978

MWPS012174

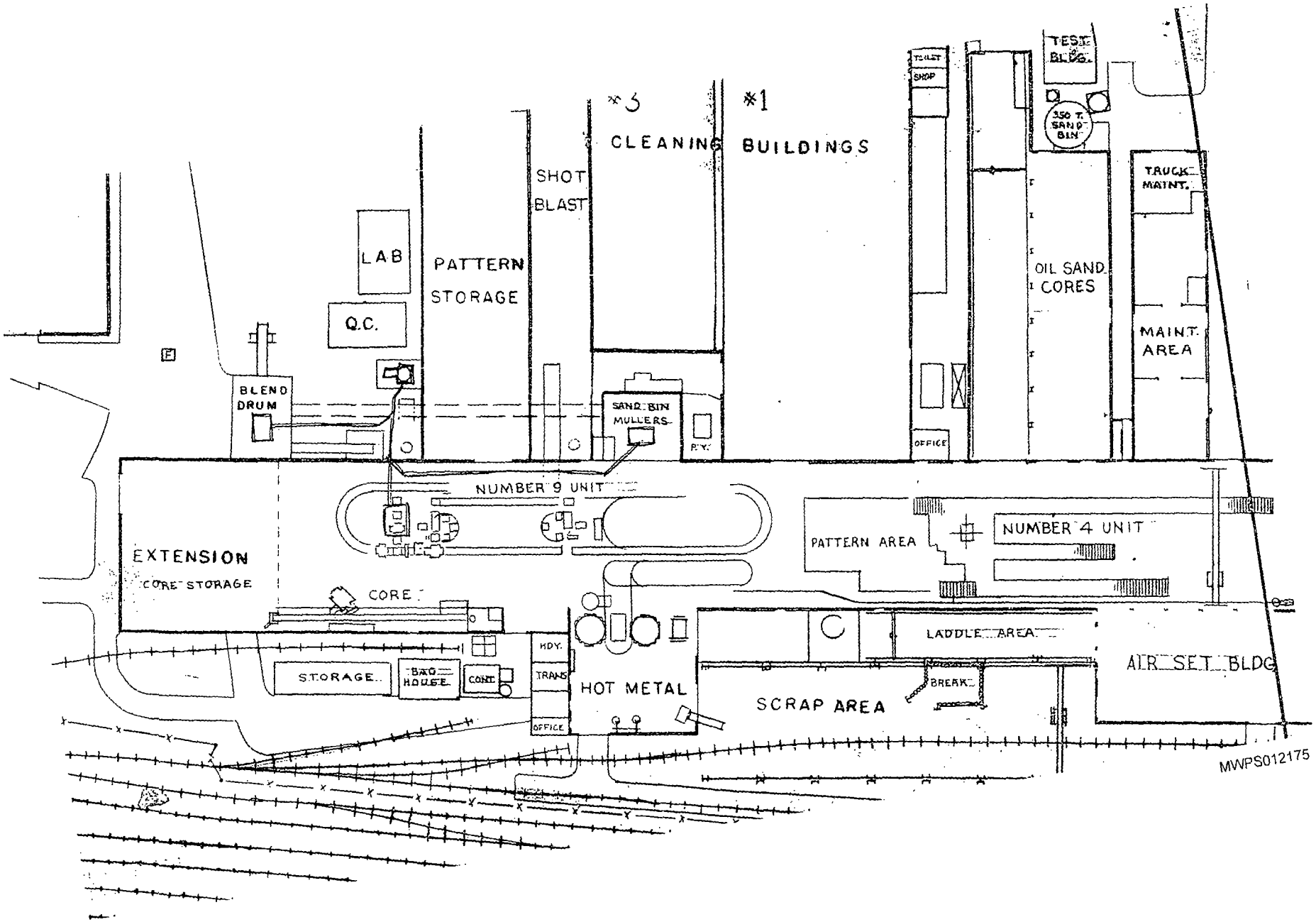
#3
#1
CLEANING BUILDINGS
SHOT BLAST
PATTERN STORAGE
LAB
Q.C.
BLEND DRUM
SAND BIN MULLERS
P.Y.
TOILET
SHOP
OFFICE
TEST BLDG.
350 T. SAND BIN
OIL SAND CORES
TRUCK MAINT.
MAINT. AREA
NUMBER 9 UNIT
EXTENSION
CORE STORAGE
CORE
PATTERN AREA
NUMBER 4 UNIT
STORAGE
BAG HOUSE
CONT.
HDY.
TRANS
OFFICE
HOT METAL
LADDLE AREA
BREAK
SCRAP AREA
AIR SET BLDG.
MWPS012175

ENG-27 SHEET NO. ..... OF .....

ENGINEERING CALCULATIONS

PROJECT ..... G.O. ..... PLANT CVF

SUBJECT No 9 UNIT

BY H. R. SANDERS DATE 7/20/78 CHKD. BY ..... DATE .....

PROCESS WT.

IRON POURED (Jan. - May 1978)

#4 Unit - 2422 tons
#9 Unit - 14858 tons
#10 Unit - 4000 tons

17,680 tons X 2 (Loss correction) = 35,360 tons

35,360 tons ÷ 21 wks ÷ 5 day/wk ÷ 16 hr/day = 21.05 ton/hr.

Design melt rate for cupola = 25 ton/hr
(Based on cupola permit application)

Ratio of design iron melt to actual used

$\frac{25 \text{ ton/hr}}{21.05 \text{ t/hr}} = 1.18$

DESIGN IRON USAGE AT #9 UNIT

$\frac{14858 \text{ tons}}{21.05} \times 1.18 \div \underbrace{21 \div 5 \div 16}_{\text{Sample period (hr.)}} = 10.435 \frac{\text{tons}}{\text{hr.}}$

$10.435 \times 2 = 20.87$ tons/hr. (Iron)

ASSUME 10:1 sand to iron ratio

$\underbrace{208.7}_{\text{Sand}} + \underbrace{20.87}_{\text{Iron}} = 229.57$ tons/hr

= 459,140 lb/hr.

MWPS012176

7-25-78

EQUIPMENT INFORMATION

FORM · E103 · WET SCRUBBING DEVICE

At the instruction of the Bureau a DUCON wet scrubber was specified for informational purposes only. If another unit is bought, an updated form will be necessary.

A unit was specified which can be upgraded for additional ΔP across the throat if visibility problems are encountered.

Specs: per Ed Vaughn / Bob Hilley

Fan - 18.5" TSP 800 RPM 175 HP

model 41 LS 40,000 ACFM

Fan cond. : 100 °F SAT.

Scrubber - #38 Ducon

Separator - model 114 (cyclonic)

7-24-78

CONSTRUCTION PERMIT
APPLICATION - CV & F
9 UNIT

FORM-E106

calculate emission factor:

from GCA report - shakeout - 32.2 lb/ton iron
milling 20.6
screening 10.0
Sand Handling 10.3
73.1

Estimated capture efficiency - 80%

Emission factor:

73.1 lb part/ton iron × .8 = 58.5 lb/ton

calculate emissions:

Design rate per iron - 20.87 Ton/hr

20.87 Ton iron/hr × 58.5 lb/ton = 1220.5 lb/hr

FORM E103

Calculate STP volume conditions @ fan

assume 40,000 ACFM @ 100°F Sat.

$\frac{40{,}000 \text{ CFM}}{15.2 \text{ cu ft/lb da.}} \times \frac{\text{cu ft}}{0.075 \text{ lb da}} = 35{,}093 \text{ SCFM}$

MWPS012178

SK78/4-26-1

INDUSCO, INC.
BIRMINGHAM, ALA.

U.S. PIPE & FOUNDRY CO
CHATTANOOGA FITTINGS F
SAND SHAKEOUT WET
SCRUBBER SYS.

JRM 4/26/78

1/8" = 1'-0"

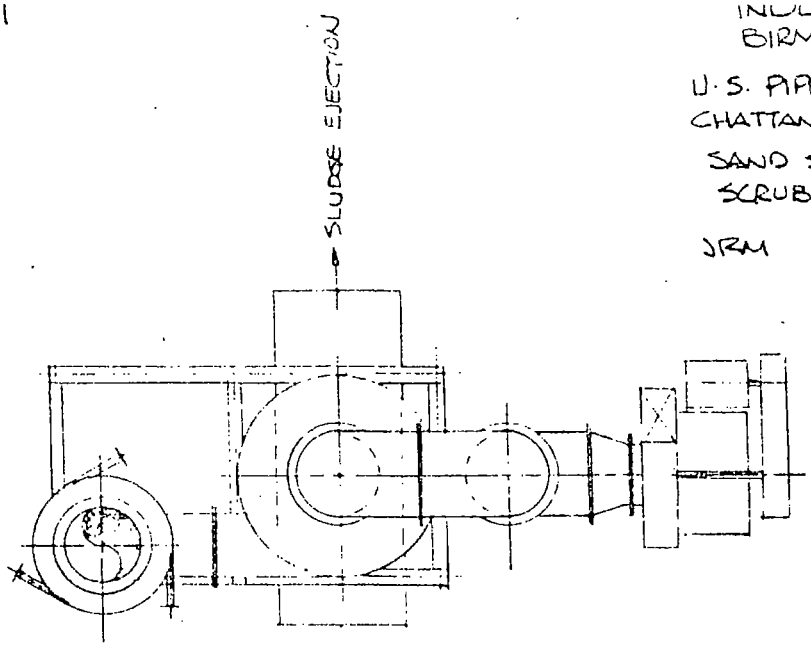

PLAN

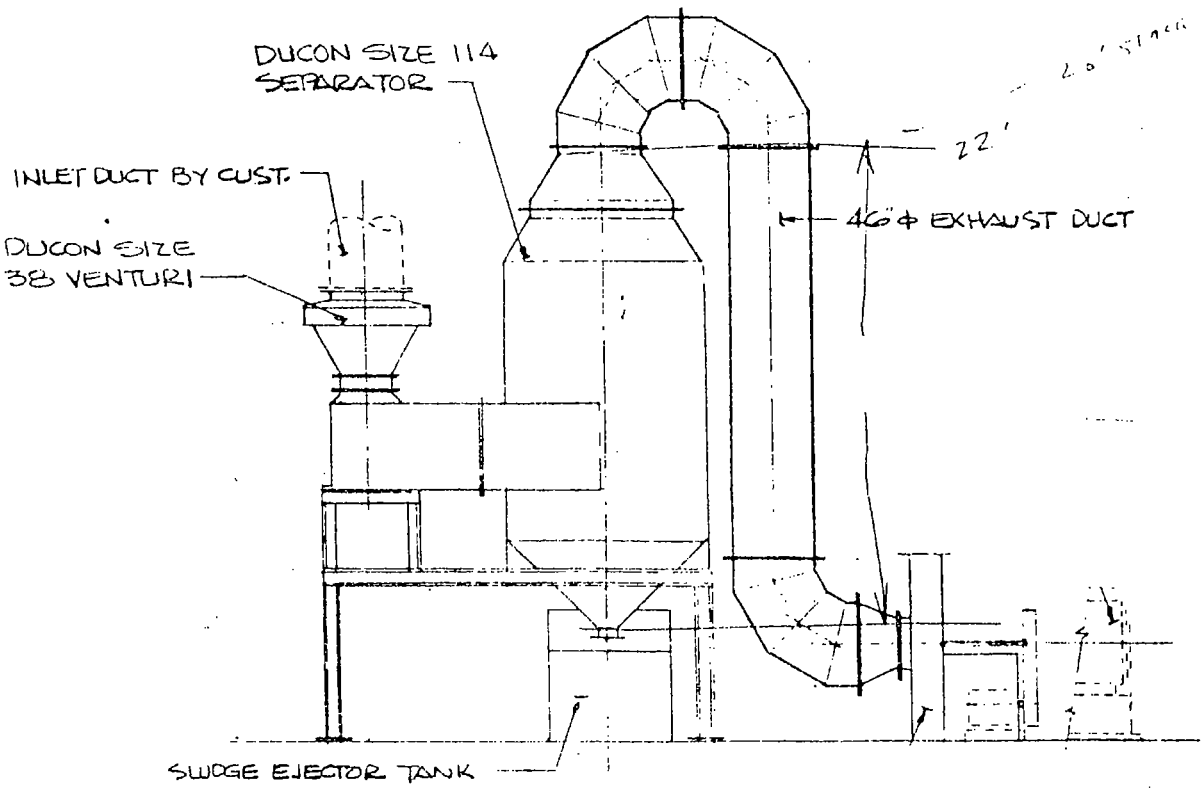

ELEVATION

MWPS012179

PROJECT: #9 Emission Cont. COMPANY: U. S. Pipe & Foundry

PLANT: Chattanooga Valve & Fittings

SUBJECT: Emission Factor For #9 Unit Permit to Construct

1. Emission Factor:

a. From GCA Report - Emission factors (lb./Tn iron)

Shakeout	-	32.2
Muller	-	20.6
Screening	-	10.0
Sand Handling	-	10.3
		73.1 lb. of particulate per ton of iron.

b. Estimated capture efficiency: 80%

EF = 73.1 lb/ton x .80 = 58.5 lb/ton

2. Emissions:

Design rate for molten iron - 20.87 tn/hr.

20.87 tn/hr. x 58.5 lb/ton = 1220.5 lb/hr

POLLUTION ESTIMATION FORM

FORM: E106

1. Name of Company (as shown on Line 1, Form E001): _____

2. Equipment Name (as shown on Line 10, Form E001): No. 9 Unit – Sand Handling and Preparation and Shake-Out

3. Type of pollutant for which estimation is made: ~~Part Venlate~~ PARTICULATE Matter

4. Pollutant Emission Factor (PEF): 58.5 lb./ton iron
(Give value & units in lbs/ton, lbs/lbs, lbs/gal, gr/ft^3, etc.)

Source of Emission Factor: Engineering Estimate (See attached)

5. Uncontrolled Pollution Emission Rate:

58.5 (PEF from Item 4) x 20.87 ton iron/hr. (Give operating rate for this equipment and the appropriate units in either lbs/hr, tons/hr, gal/hr or CFM) = 1220.5 lb./hr. (Give value & units)

6. Uncontrolled Pollution Emission Rate: 1220.5 (from Item 5 convert to lbs/hr) lbs emitted/hr

This is to certify that I am familiar with the operations concerning this equipment and that the information provided on this application is true and complete to the best of my knowledge. This form must be completely filled out before acceptable.

Mail To:
CHATTANOOGA-HAMILTON COUNTY
AIR POLLUTION CONTROL BUREAU
3511 Rossville Boulevard
Chattanooga, Tennessee 37407

Company Official: _____
Signature

Title: Plant Engineer

Date: _____

DO NOT WRITE BELOW THIS LINE

_____ Engineer Approval

This form corresponds to permit number: _____

Special Notations: _____

MWPS012181

ENG-27 SHEET NO. 1 OF 1

ENGINEERING CALCULATIONS

PROJECT #9 Emission Cont. G.O. PLANT CU&F

SUBJECT Emission Factor For #9 Unit Permit to Construct

BY J.P. DATE CHKD. BY DATE 7-26-78

1) Emission Factor :

a) from GCA Report - Emission factors. (lb/TN IRON)

shakeout	-	32.2
muller	-	20.6
screening	-	10.0
Sand Handling	-	10.3
		73.1 lb of particulate per ton of iron.

b) Estimated capture efficiency : 80%

$$EF = 73.1 \text{ lb/ton} \times .80 = 58.5 \text{ lb/ton}$$

2) Emissions :

Design rate for molten iron - 20.87 TN/hr

$$\therefore 20.87 \text{ TN/hr} \times 58.5 \text{ lb/ton} = \underline{\underline{1220.5 \text{ lb/hr}}}$$

FORM: E010

PROCESS EQUIPMENT APPLICATION

1. Name of Company (as shown on Line 1, Form E001): U. S. Pipe & Foundry Co.

2. Equipment Name (as shown on Line 10, Form E001): No. 9 Unit - Sand Handling and Preparation, and Shake-out

3. Type of Process: ~~Forming castings by pouring molten iron into sand molds.~~ Preparation of molding sand & separation of castings from sand

4. Major Raw Materials Processed: ~~Molten iron and sand.~~ Iron castings and sand

5. Date of installation, initial start-up, or alternation (such that potential emissions were increased) of equipment or device for which permit is applied for:

   [X] Before January 1, 1973 - Schedule 1

   [ ] After January 1, 1973 - Schedule 2

6. Process Weight: 460,000 lbs/hr

   (This is the total weight of all materials introduced into the process expressed in lbs/hr.)

7. Control Equipment Data:

   A. [ ] Emissions Uncontrolled

   B. [ ] Baghouse (File Form E102)

   C. [X] Wet Collecting Device (File Form E103)

   D. [ ] Electrostatic Precipitator (File Form E104)

   E. [ ] Inertial Separators (File Form E105)

   F. [ ] Other - Specify _____

8. Control Equipment Efficiency for each pollutant emitted by this equipment (from appropriate Form E102, E103, E104, E105, E107 or enter zeros if A is checked in Item 7):

	% EFFICIENCY
Particulates	99
SO_x	
NO_x	
CO	
Hydrocarbons	
Other:	

9. Actual Particulate Emissions:

A. Uncontrolled Emissions: 1220.5 lbs/hr (File Form E106)

B. Actual Emissions: _____ lbs/hr (Submit stack test report)

OR

Estimated Emissions:

$\frac{(100\% - \text{Control Efficiency } (\%))}{100\%}$ x Uncontrolled Emissions = 62.2 lbs/hr

10. Actual Sulfur Oxide Emissions:

Specify air required for process: _____ SCFM

A. Uncontrolled Emissions: _____ lbs/hr (File Form E106)

B. Actual Emissions: _____ lbs/hr (Submit stack test report)

OR

Estimated Emissions:

$\frac{(100\% - \text{Control Efficiency } (\%))}{100\%}$ x Uncontrolled Emissions = _____ lbs/hr

11. Allowable Nitrogen Oxide Emissions:

A. Nitric Acid Plants Emission Limitation (Allowable emissions will be in Item 7 on Form E101): _____ lbs/hr as NO_2

B. All other process equipment emission limitations: ☐ No Requirement

12. Nitrogen Oxide Emissions (lbs/hr as NO_2):

A. Uncontrolled Emissions: _____ lbs/hr (File Form E106)

B. Actual Emissions: _____ lbs/hr (Submit stack test report)

OR

Estimated Emissions:

$\frac{(100\% - \text{Control Efficiency } (\%))}{100\%}$ x Uncontrolled Emissions = _____ lbs/hr

13. Other Air Contaminant Emissions - Specify:

AIR CONTAMINANT	AMOUNT EMITTED (lbs/hr)

☐ The values shown were determined by actual stack test. (Submit a copy of stack test with full details).

☐ The values shown were estimated. (File Form E106 for each pollutant shown).

14. Those emissions indicated in Item 13 may at times under normal operating conditions cause (check one or more):

- [ ] Odors
- [ ] Property Damage
- [ ] Health Effects
- [ ] Eye Irritations
- [ ] Other nuisances outside of plant property
- [x] No environmental damage

15. Emission Point Data:

Stack Height (emission point) above ground:	32	ft
Ground Elevation above sea level at stack base:	666+	ft
Stack Diameter:	3.4	ft
Volume of gas discharged into atmosphere:	35100	cfm
Gas exit temperature:	100	oF

16. Average Equipment Operating Time:

A. Daily	24	hours
B. Weekly	5	days
C. Yearly	52	weeks

This is to certify that I am familiar with the operations concerning this equipment and that the information provided on this application is true and complete to the best of my knowledge. This form must be completely filled out before acceptable.

CHATTANOOGA-HAMILTON COUNTY
AIR POLLUTION CONTROL BUREAU
3511 ROSSVILLE BOULEVARD
CHATTANOOGA, TENNESSEE 37407

Company Official: _____
Signature

Title: Plant Engineer

Date: _____

NOTE: Equipment must also meet Visible Emission Code.

DO NOT WRITE BELOW THIS LINE

_____ Information approved and entered on Permit Inspection Form (Engineer)

_____ lbs/hr (allowable particulate emissions) _____ PPM by volume as SO_2

UTM Coordinates of Company: EW _____ NS _____

This form corresponds to permit number: _____

Special Notations: _____

MWPS012185

FORM: E010

PROCESS EQUIPMENT APPLICATION*

1. Name of Company (as shown on Line 1, Form E001): U. S. PIPE AND FOUNDRY COMPANY

2. Equipment Name (as shown on Line 10, Form E001): No. 9 Unit

3. UTM Coordinates of Company (i.e. source): EW 653.32 NS 3877.38

4. Type of Process: Forming castings by pouring molten iron into sand molds.

5. Major Raw Materials Processed: Sand and molten iron.

6. Date of installation, initial start-up, or alteration (such that potential emissions were increased) of equipment or device for which permit is applied for:

- [X] Before October 14, 1969 - Schedule 2
- [ ] After October 14, 1969, but before January 1, 1973 - Schedule 1
- [ ] After January 1, 1973 - Schedule 3

7. Process Weight (lbs/hr): 448,920

(This is the total weight of all materials introduced into the process - for a cyclical or batch operation divide the total process weight per cycle or batch by the number of hours per cycle or batch).

8. Control Equipment Data:

- [ ] Emissions Uncontrolled
- [X] Baghouse (File Form E102)
- [ ] Wet Scrubbing Device (File Form E103)
- [ ] Electrostatic Precipitator (File Form E104)
- [ ] Cyclone or Rotoclone (File Form E105)
- [ ] Other - Specify _____ (File Form E107)

9. Control Equipment Efficiency for each pollutant emitted by this equipment. (from appropriate Form E102, E103, E104, E105, E107, or enter zeros if A is checked in Item 8):

		% EFFICIENCY		SPECIFY POLLUTANT	% EFFICIENCY
A	Particulates	99	D		
B	SO_x		E		
C	NO_x		F		

*Must be accompanied by Form E001.

MWPS012186

10. Allowable particulate emissions (lbs in any single hour)*: 57.63 lbs/hr

(This is determined from Table 2 in the local air pollution ordinance/law or from Appendix A in the revised permit manual. Consult Item 6 above to determine proper column in Table 2 and Item 7 for proper process weight).

11. Actual Particulate Emissions (lbs/hr):

Uncontrolled Emissions: 252.7 lbs/hr

Actual Emissions: _____ (or fill in next line)

(1 - 0.01 x Control Efficiency from Item 9A) x Uncontrolled Emissions = 2.53 lbs/hr.

[ ] The values shown in this item were determined by actual stack test (submit copy of stack test report with full details; [ ] Already submitted).

[X] The values shown in this item were estimated (File Form E106).

12. Are actual particulate emissions (Item 11) less than allowed particulate emissions (Item 10); [X] YES [ ] NO

(If NO is checked, then more control equipment will be required before equipment can be operated - Consult the Bureau).

13. Allowable Sulfur Oxide Emissions (as ppm by volume SO_2).

(Circle applicable emission limitation, see Item 6 for proper schedule)

	Before July 1, 1974	After July 1, 1974
Schedule 1	500	500
Schedule 2	2000	500
Schedule 3	500	500

14. Actual Sulfur Oxide Emissions (ppm by volume as SO_2).

Specify air required for process (SCFM): _____

Uncontrolled Emissions: _____ ppm

Actual Emissions: _____ (or fill in next line)

(1 - 0.01 x Control Efficiency from Item 9B) x Uncontrolled Emissions = _____ ppm.

[ ] The values shown in this item were determined by actual stack test (Submit copy of stack test report with full details; [ ] Already submitted).

[ ] The values shown in this item were estimated (File Form E106).

15. Are actual SO_x emissions (Item 14) less than allowed SO_x emissions (Item 13)

[ ] YES [ ] NO

(If NO is checked, then more control equipment will be required before equipment can be operated - Consult the Bureau).

*Note that equipment must also meet visible emissions code.

16. Allowable Nitrogen Oxide Emissions (lbs/hr as NO_2):

1. Nitric Acid Plants emission limitation (Submit E101 - allowable emissions will be in Item 7 on this form): _____

2. All other process equipment emission limitations: No requirement

17. Nitrogen Oxide Emissions (lbs/hr as NO_2):

Uncontrolled Emissions: _____ lbs/hr

Actual Emissions: _____ (or fill in next line)
(1 - 0.01 x Control Efficiency from Line 9C) x Uncontrolled Emissions = _____ lbs/hr.

☐ The values shown in this item were determined by actual stack test (Submit a copy of stack test report with full details; ☐ Already Submitted).

☐ The values shown in this item were estimated (File Form E106).

18. Are actual Nitrogen Oxide Emissions (from Item 17) less than allowed Nitrogen Oxide Emissions (from Item 16):

☐ YES ☐ NO

(If answer is NO, additional control equipment must be installed before equipment can be operated).

19. Other air contaminant emissions - specify:

☐ The values shown were determined by actual stack test (Submit a copy of stack test with full details; ☐ Already Submitted)

☐ The values shown were estimated (file Form E106 for each pollutant shown)

TYPE	LBS/HR

20. Those emissions indicated in Item 19:

☐ May at times under normal operating conditions cause odors, property damage, health effects, eye irritations or other nuisance outside of plant property.

☐ Will not under normal operating conditions cause any environmental damage or create nuisances outside of plant property.

☐ Do not know.

21. Emission Point Data:

Stack height above ground (ft):	42'
Ground elevation above sea level at stack base (ft):	666+
Stack Diameter (ft):	NA
Uncorrected gas exit velocity (ft/sec):	5.8333'/sec
Gas exit temperature (°C):	120°

☐ Emissions from this equipment is fugitive in character and preceeding data is not applicable.

22. Operational times during normal operating conditions:

PERIODS	TOTAL HOURS
Fall	1500
Winter	1500
Spring	1500
Summer	1500
Daily (during average day)	24
Weekly (during average week)	120

This is to certify that I am familiar with operations concerning this equipment and the information provided on this application is true and complete to the best of my knowledge.

Company Official: Joe Hallows
Signature

Title: Plant Engineer

Date: May 27, 1976

DO NOT WRITE BELOW THIS LINE

_____ Engineer Approval

_____ Entered into tape file and state keypunch form filed

This form corresponds to permit number: _____

Special Notations: _____

THE FOLLOWING WEIGHTS ARE BASED ON AN ESTIMATED FUTURE PRODUCTION RATE OF 50,000 VALVES/YR. THE PER CENTAGE OF EACH SIZE IS BASED ON FY'86 SALES.

				# paint/casting		# paint/yr		
4"ø	9%	OF 50,000	(4,500)	1	@ 62#/ea.	4,500	279,000#	51
6"ø	51%	OF 50,000	(25,500)	1.5	@ 113#/ea.	38,250	2,881,500#	62
8"ø	23%	OF 50,000	(11,500)	2	@ 175#/ea.	23,000	2,012,500#	105
10"ø	4%	OF 50,000	(2,000)	2.5	@ 280#/ea.	5,000	560,000#	100
12"ø	13%	OF 50,000	(6,500)	3	@ 382#/ea.	19,500	2,483,000#	500
TOTALS	100%		50,000			90,250	8,216,000#	
						103,790		
					add 15% for Phase off		8,319,790#	82%
					50 wks		16	54%
								60%
								36%

8,319,790

~~8,216,000#/YR. BASED ON 240 DAYS/YR & 16 HR/DAY~~

$$\frac{\cancel{8,216,000\#}\ 8,319,790}{\cancel{YR}}\left(\frac{\cancel{1YR}}{\cancel{240\ DAYS}\ 250}\right)\left(\frac{\cancel{1\ DAY}}{16\ HRS}\right) = \frac{\cancel{2139.58\#}\ 2080\ \#/hr}{HR.}$$

SAY 2200#/HR. PRODUCTION THRU Paint equip

~~CLEANING EQUIPMENT~~

Say ~~2054~~ 2100 #/hr thru cleaning equip

Willie 6-25-87

Tons/yr	casting	paint
	4108	52

16" R/S values

Cal '88 1st gear	2nd	3rd	4th	5th
75	175	300	525	700.

E106

POLLUTION ESTIMATION FORM

1. Name of Company: U. S. PIPE & FOUNDRY COMPANY
(as shown on Line 1, Form E001)

2. Equipment Name: No. 9 Unit
(as shown on Line 10, Form E001)

3. Pollutant for which estimation is to be made: Particulate

4. Pollutant Emission Factor:

1.126 (Value) lbs/ton processed (Units)

(For example, in the case of an uncontrolled gray iron foundry cupola, the carbon monoxide emission factor is:

145 (Value) lbs emitted/ton of metal charged into cupola (Units)

Source of Emission Factor: Compliance stack test of similar shakeout unit.

(In the above example the source is: Compilation of Air Pollutant Emission Factors, U. S. Environmental Protection Agency, Office of Air Programs, Research Triangle Park, North Carolina, February 1972, Office of Air Programs Publication No. AP-42, Page 7-13). If some type of material balance was used, give brief details).

5. Pollution Emission Rate = 1.126 (Value) lb/ton (Units) (Emission Factor from 4) X 224.46 (Value) tons/hr. (Units) (Appropriate Process Weight)

= Pollution Emission Rate = 252.7 (Value) lb/hr (Units)

(In the example considered so far, the appropriate process weight would be the amount of metal charged per unit time. This may or may not be the same as the process weight shown on the blue or yellow forms. In the case being considered the process weight shown on the yellow or blue forms would be the metal plus coke used in the cupola. The process weight needed in this item would be the metal charged into the cupola per unit time. Assuming that this is 500 tons/day, the carbon monoxide emission rate would be (145 lbs/ton) x (500 tons/day) = 72,500 lbs/day.

6. Pollution Emission Rate (lbs emitted/hour): 252.7 lb/hr.
(Convert emission rate shown in Item 5 to pounds emitted/hour - this is before control. If the cupola indicated in Items 4 and 5 were operated 24 hours per day, then the pollution emission rate in lbs/hr would be 3021 lbs/hr - this is the value to be used on the blue form). For now continuous emission systems rates must be converted to maximum amount if any single hour eg., if an an operation emits for 30 minutes and does not emit again for three hours, emission in lbs/hr is not emissions in 30 minutes divided by three hours, but emissions in 30 minutes divided by one hour.

This is to certify that I am familiar with operations concerning this equipment and the information provided on this application is true and complete to the best of my knowledge.

Company Official: _____
Signature

Title: Plant Engineer

Date: May 27, 1976

MASS	GRAMS	KILOGRAMS	OUNCES	POUNDS	GRAINS	TONS (SHORT)
Grams	1	0.001	3.53×10^{-2}	2.21×10^{-3}	15.43	1.102×10^{-6}
Kilograms	1000	1	35.27	2.205	15432.0	1.102×10^{-3}
Ounces (avoir)	28.35	0.02835	1	0.0625	437.5	3.125×10^{-5}
Pounds (avoir)	453.6	0.4536	16.0	1	7000	5×10^{-4}
Grains	0.0648	6.48×10^{-5}	2.286×10^{-3}	1.429×10^{-4}	1	7.142×10^{-8}
Tons (short)	9.072×10^{5}	907.19	3.2×10^{4}		1.4×10^{7}	1

TIME	SECOND	MINUTE	HOUR	DAY	WEEK	MONTH	YEAR
Second	1	0.0167	2.78×10^{-4}	1.16×10^{-5}	1.65×10^{-6}	3.82×10^{-7}	3.17×10^{-8}
Minute	60	1	0.01667	6.94×10^{-4}	9.97×10^{-5}	2.28×10^{-5}	1.9×10^{-6}
Hour	3600	60	1	0.04167	5.95×10^{-3}	1.37×10^{-3}	1.14×10^{-4}
Day	8.64×10^{4}	1440	24	1	0.143	0.0329	0.00274
Week	6.05×10^{5}	1.003×10^{4}	168	7	1	0.230	0.0191
Month	2.62×10^{6}	4.378×10^{4}	729.6	30.4	4.34	1	0.0833
Year	3.15×10^{7}	5.26×10^{5}	8760	365	52.1	12	1

DO NOT WRITE BELOW THIS LINE

_____ Engineer Approval

_____ Entered into tape file and state keypunch from file

This form corresponds to permit number: _____

Special Notations: _____

MWPS012193

10-29-87 INFO. FOR PLEASANT (PERMITS)

NEEDS: LAYOUT DRAWING 3450-A-49579

BAGHOUSE SPECS FROM PANGBORN QUOTE

POUNDAGE/HR. OF PRODUCT THRU CABINET.

MINIMUM - 40PCS/HR 4" BODIES @ 49# = 1960#

MAX. 40PCS/HR 10" @ 220# = 8800#

4"-6" are 75% of thru put

SHOT RATE - 2 WHEELS COMBINED 93,500 #s/HR.
IF FULL HP & FULL TIME

AIR BLAST - 2,500#/HR. OF ABRASIVE
THRU 2 5/16" Ø NOZZLES
206 SCFM AIR @ 80PSI

50,000 valves/yr in 2 shift operation

90 To 100 PSI will be O.K.

DUST COLLECTOR SYSTEM

100 PSI

One (1) Model 64 HPS-8 continuous operation high energy pulse jet dust collector to serve the ventilating requirements of the foregoing specified equipment, generally per enclosed drawing M-810594, and having the following features:

The collector has 64, 4-1/2" diameter x 8' long, 16 ounce polyester felt filter bags providing a total cloth area of 671 square feet, and when handling the specified 5086 design CFM air volume, will operate at an air-to-cloth ratio of 7.57 to 1.

15 HP Fan

Collector casing fabricated of No. 12 gauge hot rolled steel, welded construction, stiffened to withstand up to 20" S.P.W.G. pressure. Pre-installed outside-mounted 4" diameter air header and 3/4" diaphragm valves. All pilot solenoids are located in a NEMA IV enclosure mounted on casing. The die cast aluminum venturis are mounted in the tube sheet with rivets.

The solid state programmer provided is mounted in a NEMA IV enclosure and provides automatic operation of the cleaning cycle. The programmer is field adjustable for controlling the duration and interval between the compressed air cleaning pulsations. Programmer is factory set for optimum operation. A photohelic type differential pressure switch is included to keep the collector within the designated static pressure of the system and to indicate the differential pressure across the dust collector bags. Gauge with 25' of tubing is included. Tubing is supplied for attaching gauge to the factory-installed fitting mounted on casing. Gauge and tubing shipped loose.

The dust is collected in a pyramidal hopper, 12 gauge welded construction, having minimum side slope of 60 degrees and is an integral part of the collector. Dust is continuously removed by a 9" x 9" rotary valve having 1 HP drive and motor.

FORM E001

BASIC APPLICATION FOR EQUIPMENT / AIR POLLUTION PERMIT*

1. Name of Company U. S. PIPE & FOUNDRY COMPANY 2. SIC Code: _____

3. Company Official to Contact Jim Moore 4. Phone No: 265-4611

5. Mailing Address for Line 3: 2701 Chestnut St., Chattanooga, Tenn. 37408
   Street City State Zip Code

6. Company Address
   (if different from line 5): _____
   Street City Zip Code

7. Application for:

   ☐ Installation Permit

   ☐ Certificate of Operation (Initial Application)
   Temp. Operating Permit No.: _____

   ☐ Temporary Operating Permit
   Instal. Permit No.: _____

   ☒ Certificate of Operation (Renewal)
   Certificate of Operation 35775039

8. Type of equipment for which application is made:

   ☒ Process Equipment (~~Submit Form E010; ☐ Already Submitted~~)

   ☐ Fuel Burning Equipment (Submit Form E011; ☐ Already Submitted)

   ☐ Incineration Equipment (Submit Form E012; ☐ Already Submitted)

   ☐ Odor or Miscellaneous (Specify) _____ (Submit Form E013; ☐ Already Submitted)

   ☐ Minor Pollution Source—less than 1000 lbs / year and 10 lbs / day total uncontrolled contaminant emissions (Submit Form E014; ☐ Already Submitted)

9. The following forms are filed with this application: _____

10. Equipment Name: No. 9 Unit (Code 31F)

11. If Application is for a Temporary Operating Permit or Certificate of Operation (Initial or Renewal) are there any changes since previous application in the equipment or operational procedures which might:

    A) Increase, decrease, or alter process materials, fuel, refuse type, etc.
    ☐ YES ☒ NO

    B) Increase, decrease, or alter emissions or emission points
    ☐ YES ☒ NO

    (If either answer is YES, new forms E010, E011, E012, E013, or E014 and associated forms must be filed with this application.)

* Form must be completely filled out before it is acceptable.

12. Process Weight, lb/hr, (Item 7 on Form E010), Incineration Rate, lbs/hr, (Item 7 on Form E012), or Fuel Burning Rate, 1000 BTU/hr, (Item 5C on Form E011):

448,920 LB./HR.

13. Permit Fee: $65.00 – pro rated $81.25

Installation Permit Fee (See Appendix B in revised permit manual)
Temporary Operating Permit Fee: $15.00
Certificate of Operation–Initial Fee (See Appendix B in revised permit manual)
Certificate of Operation–Renewel Fee (See Appendix B in revised permit manual)
Certificate of Operation–Minor source Fee: $5.00

This is to certify that I am familiar with operations concerning this equipment and the information provided on this application is true and complete to the best of my knowledge:

Mail To:
CHATTANOOGA–HAMILTON COUNTY
AIR POLLUTION CONTROL BUREAU
3511 Rossville Boulevard
Chattanooga, Tennessee 37407

Company Official: Jerry D. Simmons
Signature

Title: Plant Engineer

Date: August 15, 1973

DO NOT WRITE BELOW THIS LINE

RV Check Received. Amount 1162.50 Ck #5372

J.M. Engineer or Investigator approval Date Inspected: Sept. 12, 1973

JB Reviewed by Supervisor

FD Entered into tape file and state keypunch form filed

Registered in Suspense File

Special conditions imposed:

Expiration Date: January 11, 1975

New: 31230039C
Permit Number: 35775039C

Approved By: H. L. Pan
Director

Date: Sept. 17, 1973

MWPS012197

11·2·87

1. 12 ft table - revise the E 102 for the new baghouse

2. Epoxy coating - R.S. Value - unpermitted, Torit. Process wt.?

3. new Pangborn blast cabinet - file for construction permit.

4. Blast Booth @ Brass Foundry - do not bring up if possible . .

5.

12·8·87 Not inspected yet by CHC APCB not scheduled since no resubmittals have been sent in.

Do Not Write Here.
Grid No.

PROCESS EQUIPMENT PERMIT APPLICATION

Name of Company: U. S. PIPE & FOUNDRY CO.

Company official to contact: James B. Grant

Mailing address: 2701 Chestnut St., Chattanooga, Tenn. 37408

Phone Number: 265-4611

IMPORTANT: For faster and more efficient processing of permit application give answers to all questions and requirements on attached instruction sheets in as much detail as possible where applicable.

BASIC PROCESS EQUIPMENT

Equipment Name: No. 9 Unit (Code 31F)

Type of Process: Forming castings by pouring molten iron into sand molds

Raw Material(s) Processed: Sand & molten iron

Process Weight: 448,920 lbs./hr. LB./HR.

Emission Type(s): Smoke, dust from sand

Emission Rate (Calculated or Actual Test):

Uncontrolled: LB./HR.

Controlled: 479 lbs./hr. LB./HR.

Control Equipment on Process: Yes X No

Type of Control: C. B. Schneible Co. No. 129, F21BJ, Multi Wash Collector (Code 32F)

Note: If control equipment, fill out applicable information on back of page.

Other Pertinent Information: This application is for a Certificate of Operation for existing equipment.

This is to certify that the above information is true and complete to the best of my knowledge.

Company Official:

Title: Plant Engineer

Date:

Return completed form to:
Chattanooga-Hamilton County Air Pollution Control Bureau
100 E. 11th Street
City Hall Annex, Room 201
Chattanooga, Tennessee 37402

APCB-4
5-71

No. 9 Unit

A. Location Code

31 F, U. S. Pipe & Foundry Drawing No. A-1861-CH.

B. Description of Process

The No. 9 Unit is an automatic molding complex which contains the entire molding process from preparing the molding sand to final shakeout of the castings and return of the sand.

The sand preparation station consists of two Beardsley & Piper 100B Speedmullers and related sand bins and handling equipment. The emissions from this part are collected by ductwork as shown on U. S. Pipe & Foundry Drawing No. 250A-17062.

The shakeout is a Herman Pneumatic Flask Shakeout which is totally enclosed by a paneled enclosure as shown on U. S. Pipe & Foundry Drawing No. 250A-17065. At this station, the sand and castings are dumped from the flask, with the emissions which were contained within the sand now being released.

After the shakeout station, the sand is handled by a Link Belt Sand Return System. This system consists of several conveyors and a sand separator. These are served by hoods and ductwork as shown on U. S. Pipe & Foundry Drawing No. 250A-17063.

The total collect in volume is 39,700 CFM, which is collected by a C. B. Schneible Co. No. 129, F21BJ Multi-Wash Collector.

C. Operating Schedule

Optimum Rate - 20 hours/day, 5 days/week, 50 weeks/year.

D. Flow Diagram

U. S. Pipe & Foundry Drawings No. 250A-17062, 250A-17063, 250A-17064, and 250A-17065.

E. Drawing of Equipment

U. S. Pipe & Foundry Drawing No. 250A-15469.

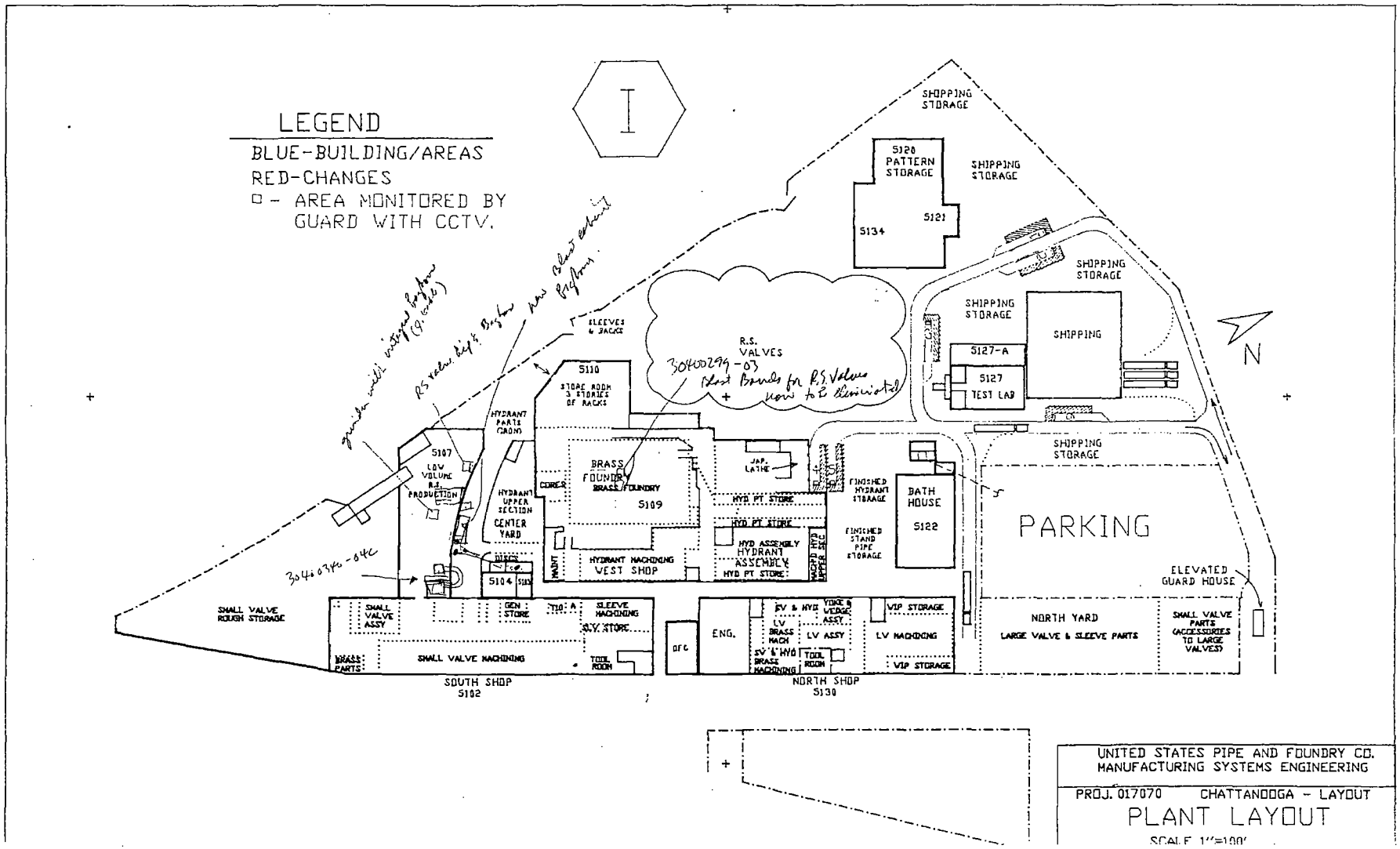

UNITED STATES PIPE AND FOUNDRY CO.
MANUFACTURING SYSTEMS ENGINEERING

PROJ. 017070 CHATTANOOGA - LAYOUT

PLANT LAYOUT

SCALE 1"=100'

MWPS012201

Do Not Write Here.
Grid No.

PROCESS EQUIPMENT PERMIT APPLICATION

Name of Company: U. S. PIPE & FOUNDRY CO.

Company official to contact: James B. Grant

Mailing address: 2701 Chestnut St., Chattanooga, Tenn. 37408

Phone Number: 265-4611

IMPORTANT: For faster and more efficient processing of permit application give answers to all questions and requirements on attached instruction sheets in as much detail as possible where applicable.

BASIC PROCESS EQUIPMENT

Equipment Name: C.B. Schneible Co. No. 129, F21 BJ, Multi Wash Collector (Code 32F)

Type of Process: Collect emissions from No. 9 Unit.

Raw Material(s) Processed: Particulate Matter (smoke, dust from sand)

Process Weight: 448,920 lbs./hr. from No.9 Unit, with emissions of 479 lbs./hr. LB./HR.

Emission Type(s): Dust

Emission Rate (Calculated or Actual Test):

Uncontrolled: 23.9 lbs./hr. LB./HR.

Controlled: LB./HR.

Control Equipment on Process: Yes No

Type of Control:

Note: If control equipment, fill out applicable information on back of page.

Other Pertinent Information: This application is for a Certificate of Operation for existing equipment.

This is to certify that the above information is true and complete to the best of my knowledge.

Company Official:
Title: Plant Engineer
Date:

Return completed form to:
Chattanooga-Hamilton County Air Pollution Control Bureau
100 E. 11th Street
City Hall Annex, Room 201
Chattanooga, Tennessee 37402

APCB-4
5-71

MWPS012202

CONTROL EQUIPMENT

BAGHOUSE

Number of Compartments: _____.

Extra Compartment for Cleaning: Yes _____. No _____.

Filter Cloth Type: _____. Cloth Area: _____.

Entrance Gas Temperature (Actual): _____ °F. _____ °C.

Gas Volume: _____ FT^3/Min. Pressure Drop: _____ in H_2O.

Manufacturers Stated Efficiency: _____ %.

ELECTROSTATIC PRECIPATATOR

Entrance Gas Temperature (Actual): _____ °F. _____ °C.

Gas Flow Rate, Q: _____ FT^3/S.

Collecting Surface Area, A: _____ FT^2.

Particle Size Distribution: _____ Microns.

Manufacturers Stated Efficiency: _____ %.

OTHER

Type of Equipment: 3 - stage wet scrubber

Entrance Gas Temperature: (estimated) 100° Max. _____ °F. _____ °C.

Gas Volume: 39,700 FT^3/Min. Pressure Drop 4" (estimated) in. H_2O.

Manufacturers Stated Efficiency: 95% %.

Other Pertinent Information:

C. B. Schneible Co., No. 129, F21 BJ, Multi Wash Collector

A. Location Code

32F, U. S. Pipe & Foundry Drawing No. A-1861-CH.

B. Description of Process

Smoke and dust generated by the No. 9 Unit are collected by the Schneible collector. The collector is a three stage water wash type collector with an American Standard No. 445 tubular centrifugal fan (100 H.P.) exhauster. After going through the three stages, the emissions are accumulated in a 2000 gallon water tank with a sludge removal conveyor continuously operating to carry the sludge to a container for disposal.

C. Operating Schedule

Optimum Rate - 20 hours/day, 5 days/week, 50 weeks/year.

D. Flow Diagram

U. S. Pipe & Foundry Drawings No. 250A-17062, 250A-17063, 250A-17064, and 250A-17065.

E. Drawing of Equipment

U. S. Pipe & Foundry Drawing No. 250A-17058.

C. M. H.

UNITED STATES PIPE AND FOUNDRY COMPANY
Technical Services-Pipe

March 15, 1983

To:	Messrs. W. E. Fleck	Address:	General Office
	J. T. Donahue		General Office
	C. N. Codding		General Office
	J. R. Walker		General Office
	J. F. Stadtlander		General Office
	W. Berry		Chattanooga Fittings Plant
	J. W. J. Cain		Chattanooga Fittings Plant
	J. B. Dockery		Chattanooga Soil Pipe Plant
	C. Parris		Anniston Soil Pipe Plant
	C. R. Burger		Chattanooga V & H Plant
	F. Salloga		Chattanooga V & H Plant
	L. Murphree		General Office
	P. Skewes		General Office
	TSP Route		
From:	P. I. McGrath, Jr.	Address:	Technical Services-Pipe

Subject: DRAFT OF U. S. PIPE SPECIFICATION FOR EPOXY COATING OF HYDRA WEDGE™ VALVES

Attached is a draft of our proposed specification for the fusion bonded epoxy coating of our HYDRA WEDGE™ valve. Please comment to this office by April 4, 1983.

P. I. McGrath, Jr.

P. I. McGrath, Jr.

PIM/mj

Attach:

ENVIRONMENTAL SERVICE
OCT 17 1984

DRAFT 3/11/83

SPECIFICATION FOR THE EPOXY COATING OF HYDRA WEDGE™ VALVES MANUFACTURED AT U. S. PIPE'S - CHATTANOOGA VALVE & HYDRANT PLANT

1. SCOPE

1.1 This specification covers the procedure required for the seletion, surface preparation, coating, and inspection of epoxy coated HYDRA WEDGE™ valves. This process is capable of a projected production rate of 50 valves per day.

2. APPLICABLE STANDARDS

2.1 AWWA C550-81 - AWWA Standard for Protective Interior Coatings for Valves and Hydrants.

2.2 ASTM D2794-69 (1974) - Test for Resistance of Organic Coatings to the Effects of Rapid Deformation (Impact).

3. SURFACE PREPARATION

3.1 Visual Examination - Prior to surface preparation, each valve component to be epoxy coated shall be visually examined. Castings containing large voids or inclusions, and/or excessive porosity, burn-in, roughness, and mismatch of core parting lines, etc., are unacceptable for epoxy coating and shall be rejected.

3.2 Internal Grinding - After visual examination, valve components containing minor internal surface irregularities such as protrusions, parting line mismatch, sand burn-in, etc., shall be ground smooth. All sharp edges which are to be coated shall be rounded by grinding.

3.3 Surface Cleaning - After all minor grinding has been completed, the internal and external surfaces, shall then be cleaned to an epoxy grade blast. An epoxy grade blast cleaned surface finish is defined as one which oil, grease, dirt, rust, and foreign matter have been completely removed except for slight shadows, streaks, or discoloration caused by their removal. This surface

cleanliness is comparable to SSPC 10 near white blast finish as it applies to gray and ductile iron pipe products. Either sand or grit may be used as the abrasive blast material. The abrasive material shall be of a size that produces an angular profile with a range of 1.0 to 2.5 mils in depth.

3.3.1 After blasting, the surface shall be blown off with compressed air for the purpose of removing traces of blast products and loose abrasives from the surface.

3.3.2 The compressed air and abrasive mixture used for blasting and cleaning shall be free from oil or condensed water.

3.3.3 Blast cleaning shall not be conducted on surfaces that may become wet after blast cleaning and before coating application, or when ambient conditions are such that visible rusting occurs before coating application. If any rust forms after blast cleaning, the surface shall be reblasted prior to coating.

4. EPOXY COATING

4.1 Material - The epoxy coating material used shall conform to the requirements specified in AWWA Standard C550 (AWWA Standard for Protective Interior Coatings for Valves and Hydrants) of the latest revision (Appendix A). The coating material shall be certified by the coating manufacturer to be suitable for contact with potable water based on one of the methods specified in Section 2.2 - Coating Material of AWWA Standard C550. The epoxy coating material tested by Technical Services and approved for use as a HYDRA WEDGE™ valve coating is described in the following subsections:

4.1.1 NAP-GARD 7-2500 POWDERED EPOXY - Manufactured by NAPKO - 5300 Sunrise St., P. O. Box 14509, Houston, TX., 77021. A Technical Data Sheet (Appendix B), a Certificate of Compliance with FDA TITLE 21, 175.300 (Appendix C), a Material Safety Data Sheet (Appendix D), and

a Certificate of Compliance with AWWA C550-81 (Appendix E) are included in this specification for reference.

4.2 Other Materials - Materials other than those listed in Section 4.1 may be used only after they have been tested and approved by Technical Services.

4.3 Coating Thickness - The cured film coating thickness shall be a minimum average thickness of 10 mils (.010"). In determining the average thickness, no individual measurement shall be below 6 mils (.006"). Castings containing rough surfaces may require a greater film thickness in order to meet the Holiday Test requirements of Section 9.3. Individual internal thickness measurements shall not be greater than 50 mils (.050") as this can cause dimensional assembly problems and also result in areas of improperly cured coating.

4.3.1 Coating thickness shall be determined using a magnetic thickness detector (Elcometer, Nordson, Microtest, or equivalent) operated and calibrated according to the instrument manufacturer's instructions.

4.3.2 The coating thickness shall be measured on each coated component at sufficiently frequent intervals to assure compliance with this section.

5. APPLICATION

5.1 Equipment - The epoxy coating shall be applied using a fluidized bed. All air used for fluidizing, transporting and /or blowing excess powder from the casting shall be dry and free of oil.

Fines in the air shall be collected and removed using a baghouse type removal and collection system.

The equipment used for heating the castings shall be capable of supplying uniformly heated castings at a minimum temperature that will provide those ranges shown in Section 5.2.2.

5.2 Dip Time and Application Temperature - The final film thickness of the epoxy coating is primarily dependent on the time the castings stays in the fluidized bed and on the temperature of the casting at the time of dipping.

5.2.1 Dip Time - In order to maintain the epoxy coating thickness within the recommended thickness range, the dip time shall be as follows when using NAP-GARD 7-2500 epoxy powder:

Large castings (i.e., 10" and 12" valve bodies and bonnets):

1-½ to 2-½ seconds

Small castings (i.e., 6" and 8" valve bodies and bonnets):

1 to 2 seconds

5.2.2 Application Temperature - Application and curing temperatures for the powder coating shall be in conformance with the coating manufacturer's recommendations. These temperatures will vary depending on the type of powder being used and on the size of the casting being coated. The higher the temperature of the casting, the thicker the final film thickness of the epoxy coating.

In order to maintain the epoxy coating thickness within the recommended thickness range, larger castings (i.e., 10" and 12" valve bodies) must be dipped at slightly lower temperatures than small castings (i.e., 6" and 8" valve bodies). These ranges for NAP-GARD 7-2500 epoxy powder are as follows:

Large castings (i.e., 10" and 12" bodies and bonnets):

375° to 400°F.

Small castings (i.e., 6"and 8" valve bodies and bonnets):

400° to 425°F.

Prior to dipping, the temperature of each casting shall be measured using "Tempilstik" heat indicating crayons manufactured by the Tempil Corporation. A properly calibrated infrared detector or contact pyrometer is also acceptable. Calibration shall be verified using Tempilstiks. Those castings with a temperature below the specified range shall be reheated and those castings with a temperature above the specified range shall be allowed to cool until the desired temperature is reached.

5.3 Dip Angle - The angle at which valve bodies and bonnets are lowered into a fluidized bed shall be in accordance with the drawing in APPENDIX "F".

5.4 Excess Powder - Immediately after removal of the casting from the fluidized bed, the excess unmelted powder shall be blown off the casting using high volume, low pressure air. As previously stated, the air shall be dry and free of oil.

6. ACCELERATED COOLING

6.1 Accelerated cooling (i.e., quenching, cooling fans, etc.) is permitted after the epoxy has reached its final cure. Based on the dip temperature range specified previously for NAP-GARD 7-2500 Epoxy Powder, accelerated cooling of this coating can begin eight (8) minutes after it has been applied.

7. RECYCLE POWDER

7.1 The use of recycle powder is permitted providing the following conditions are met:

1) Recycle powder shall be dry and not contaminated by oil, grease, or any other material.

2) Recycle powder shall be screened using an 80 mesh screen prior to addition back into the fluidized bed.

3) Recycle powder shall be added in small uniform amounts over a period of time rather than one large addition.

8. SAFETY

8.1 All company and industry safety procedures for blast cleaning and powder coating shall be followed:

8.1.1 Blast Cleaning - Eye, ear, face, hand, and respiratory protection equipment are required for blast cleaning. If blast cleaning is performed with the operator in a closed-in area, an air-fed respirator is required.

8.1.2 Powder Coating - The following safety information is taken from NAP-GARD 7-2500 MATERIAL SAFETY DATA SHEET.

8.1.2.1 Health Hazard - Treat NAP-GARD 7-2500 as a "nuisance" dust, (NIOSH approved respirator is required). Goggles or a face shield is also required to keep dust out of eyes and prevent mechanical irritation.

8.1.2.2 Explosion Hazard - Dust concentrations of .03 oz/cu. ft. or greater in a closed area may explode with minimum ignition energy of .07 joules or a minimum ignition temperature of 1150°F. For this reason dust clouds and ignition sources should be avoided. Explosion proof electric equipment and spark proof conveying equipment are recommended in the vicinity of the fluidized bed.

9. INSPECTION

9.1 Visual Examination - Prior to assembly, all coated surfaces shall be visually examined for blisters, cracks, pinholes, and lack of coverage.

9.2 Coating Thickness - Coating thickness measurements shall be performed in accordance with Section 4.3 - Coating Thickness. Any component not meeting these coating thickness requirements shall be rejected.

9.3 Holiday Test - When required on special orders, coated valve parts shall be holiday-free when tested with a low-voltage 22 to 80 volt wet sponge detector after curing. Sponges shall be saturated with a ½ percent salt (sodium chloride) solution. All holidays detected shall be repaired (see Section 10 - Repairs) prior to shipment.

10. REPAIRS

10.1 All defects disclosed by the holiday detector and obvious defects that occur as the result of mechanical damage, steel slivers, etc., shall be repaired.

10.2 Either NAP-GARD Patch Sticks No. 7-1632 or NAP-GARD No. 7-1847 Patching Compound shall be used for patching holidays and damaged areas. Experience has shown the liquid epoxy repair material to be most advantageous from a processing viewpoint.

10.2.1 Prior to repairs, the area surrounding the defect shall be abraded utilizing 80 grit carborundum cloth and/or a coarse file if the removal of small slivers in necessary.

10.2.2 When using 7-1632 Patch Sticks, the surfaces shall be heated with a small torch until the stick melts when touched to the surface. Avoid charring the surface, building up a smooth puddle of patching compound over the abraded area while heat from the torch continues to be applied. 10 mils minimum thickness is recommended.

10.2.3 When using the 7-1847 Patching Compound, equal parts of Component A and Component B shall be mixed to a uniform color and applied to the abraded surface with suitable spatula at a recommended minimum film thickness of 10 mils.

A. M. Horton

A. M. Horton, P. E.

AMH/mj
Encls:

APPENDIX A

American Water Works Association

AWWA C550-81
(First Edition)

AWWA STANDARD

for

PROTECTIVE INTERIOR COATINGS FOR VALVES AND HYDRANTS

Approved by AWWA Board of Directors Jan. 25, 1981.

AMERICAN WATER WORKS ASSOCIATION
6666 West Quincy Avenue, Denver, Colorado 80235

Committee Personnel

The Standards Committee on Protective Interior Coatings For Valves and Hydrants, which reviewed and approved this standard, had the following personnel at the time of approval:

W. J. Burns, *Chairman*
T. C. Jester, *Vice-Chairman*

Consumer Members

W. J. Burns, Department of Water and Power, Los Angeles, Calif.	(AWWA)
G. I. Hayashi, Department of Water and Power, Los Angeles, Calif.	(AWWA)
R. A. Jackson, Department of Public Utilities, Richmond, Va.	(AWWA)
L. S. Lewis, East Bay Municpal Utility District, Oakland, Calif.	(AWWA)
G. Stephen Lyons, Indianapolis Water Co., Indianapolis, Ind.	(AWWA)
Marshall Marriott, Denver Water Department, Denver, Colo.	(AWWA)
B. N. Willey Jr., Portland Water District, Portland, Maine	(NEWWA)

General Interest Members

C. D. Cole, US Army Engineering Division, Huntsville, Ala.	(USA)
W. L. Knowles, James F. MacLaren Ltd., London, Ont.,	(AWWA)
Victor Knowlton, Benham Blair & Affiliates, Inc., Oklahoma City, Okla.	(AWWA)
D. G. Kuchta, Brown & Caldwell, Walnut Creek, Calif.	(AWWA)
L. J. McCabe, US Environmental Protection Agency, Cincinnati, Ohio	(USEPA)
D. T. Prew, Toltz, King, Duvall, Anderson & Assoc., St. Paul, Minn.	(AWWA)
George Schaefer, Department of Health, Albany, N.Y.	(AWWA)
Howard Tompkins, Rowland Tompkins Corp., Hawthorne, N.Y.	(ASME)
A. F. Vondrick, Arthur Beard Engineering, Phoenix, Ariz.	(AWWA)
A. H. Winkler, Kaiser Engineers, Oakland, Calif.	(AWWA)
S. L. Zeid, Malcolm Pirnie, Inc., Columbus, Ohio	(AWWA)

Copyright ©1981 by American Water Works Association
Printed in USA

MWPS012214

Producer Members

R. J. AL, Dresser Manufacturing, Division Dresser Industries, Bradford, Pa.	(VMA)
JERRY BOTTENFIELD, Clow Corp., Oskaloosa, Iowa	(AWWA)
ABRAHAM FENSTER, Milwaukee Valve Co., Milwaukee, Wis.	(AWWA)
A. L. HENDRICKS, Wisconsin Protective Coatings, Green Bay, Wis.	(NACE)
T. C. JESTER, American Valve & Hydrant, Birmingham, Ala.	(MSS)
W. R. LEOPOLD, Mueller Company, Decatur, Ill.	(MSS)
J. G. PECIS, ITT Grinnell Valve Co., Inc., Elmira, N.Y.	(VMA)
H. R. STONER, Koppers Company, Newark, N.J.	(AWWA)
R. J. WOOD, The Taulman Company, Atlanta, Ga.	(AWWA)

MWPS012215

Table of Contents

SEC.		PAGE
	Foreword	
I.	History of Standard	v
II.	Information Regarding Use of This Standard	v
	Standard	
1	**General**	1
1.1	Scope	1
1.2	Terminology	1
1.3	Application	1
1.4	Affidavit of Compliance	1
1.5	References	2
2	**Materials**	2
2.1	General	2
2.2	Coating Material	2
3	**Coated Sample Testing**	2
3.1	General	2
3.2	Evaluation	2
4	**Production Testing**	3
4.1	General	3
4.2	Visual Examination	3
4.3	Holiday Test	3
4.4	Coating Thickness	3
5	**Inspection and Rejection**	3
5.1	General	3
5.2	Basis for Rejection	3

MWPS012216

Foreword

This foreword is for information only and is not a part of AWWA C550.

I. History of Standard

An AWWA Joint Task Group was formed on Jan. 15, 1971, to study protective linings for valves and hydrants in response to a request from the Gate Valve and Swing Check Valve, Butterfly Valve, and Fire Hydrant Committees. The purpose of this task group was to assemble all of the available information on protective linings and coatings for valves and hydrants and to prepare a report from this information.

During the AWWA annual conference on May 13, 1973, in Las Vegas, Nev., the task group finalized a recommendation to the Director of Standards, Mr. James B. Ramsey, that a separate AWWA standard be developed. The task group continued to function until the Standards Council, during its meeting in June, 1974, in Boston, Mass., adopted a resolution that a Standards Committee on Protective Interior Coatings for Valves and Hydrants be organized before December 31, 1974 with Mr. L. Neale Houston as chairman and the task group as members. The committee had its first meeting during the AWWA annual conference on June 12, 1975, in Minneapolis, Minn.

II. Information Regarding Use of This Standard

The purchaser should specify requirements by referring to the appropriate sections of the standard and should provide specific supplementary information regarding the following:

1. Standard used, that is, AWWA C550.
2. Affidavit of Compliance, if required (Sec. 1.4)
3. Submission of coated samples for testing (Sec. 3.1)
4. Holiday testing, if required (Sec. 4.2)
5. Measurement of coating thickness, if required (Sec. 4.4)
6. Inspection responsibilities (Sec. 5.1)

American Water Works Association

AWWA C550-81
(First Edition)

AWWA Standard for

Protective Interior Coatings for Valves and Hydrants

Section 1—General

Sec. 1.1 Scope

This standard pertains to special interior coatings for various types of valves and fire hydrants where interior surfaces of cast iron, ductile iron, or carbon steel are exposed to water having corrosive properties, justifying the added expense of such coatings instead of the standard coatings referenced in the valve and hydrant standards.

Sec. 1.2 Terminology

1.2.1 *Interior coatings* as used in this standard shall mean a fully cured-in-place coating material that meets all the requirements of this standard.

1.2.2 *Purchaser* shall mean the person, firm, corporation, governmental subdivision, or agency entering into a contract or agreement for the purchase of any materials or of any work to be performed, or both, in conformance with this standard.

1.2.3 *Contractor* (manufacturer) shall mean the person, firm, or corporation executing the contract or agreement with the purchaser to furnish any material or to perform any work in conformance with this standard.

1.2.4 *Inspector* shall mean the inspector or engineer employed by the purchaser and acting as the purchaser's representative, the inspector or engineer's respective assistants properly authorized and limited to the particular duties assigned to them, or the purchaser acting as his or her own inspector.

Sec. 1.3 Application

The treatment or preparation of the surfaces to be protected, the method of applying the coating, and the coating thickness shall be in accordance with the coating manufacturers' instructions and shall be such as to provide a coated surface to conform with the performance requirements of this standard. Any interface between coated ferrous surfaces and uncoated nonferrous surfaces shall be adequately protected.

Sec. 1.4 Affidavit of Compliance

The contractor (manufacturer) shall, when required by the purchaser's supplementary specifications for valves and hydrants invoking this standard, provide the purchaser with an affidavit stating that the furnished coated material conforms to the applicable requirements of this standard, as evidenced by Sec. 3 (Coated Sample Testing) and Sec. 4 (Production Testing), and that all tests specified therein have been performed and that all test requirements have been met.

MWPS012218

Sec. 1.5 References

This standard references the documents listed below. They form a part of this standard to the extent specified herein. In any case of conflict, the requirements of this standard shall prevail.

ASTM D2794-69 (1974)—Test for Resistance of Organic Coatings to the Effects of Rapid Deformation (Impact).

Food and Drug Administration Document, Title 21 of the Federal Regulations on food additives, Sec. 175.300, "Resinous and Polymeric Coatings."

US Environmental Protection Agency, Bureau of Water Hygiene, Division of Epidemiology and Biometrics, Toxicology Laboratory, Cincinnati, Ohio, "Directions for Determining the Water Extractable Substances From a Polymeric or Resinous Water Contact Surface."

Section 2—Materials

Sec. 2.1 General

When reference is made to Federal Regulations, it shall be understood that the latest revision in effect at the time of purchase order entry shall apply.

Sec. 2.2 Coating Material

The coating material, if for use in a potable water system, shall be formulated from materials deemed acceptable in the Food and Drug Administration Document, Title 21 of the Federal Regulations on food additives, Sec. 175.300, entitled "Resinous and Polymeric Coatings;" or the material shall be shown to be suitable for potable water use by the manufacturer or coating material supplier. As a basis for showing suitability for potable water use, the valve or hydrant manufacturer or coating material supplier shall use the "Directions for Determining the Water Extractable Substances from a Polymeric or Resinous Water Contact Surface," issued by the US Environmental Protection Agency.

Section 3—Coated Sample Testing

Sec. 3.1 General

Samples coated by the manufacturer in accordance with the proposed production coating material and application procedure shall be tested in accordance with Sec. 3.2.2 and Sec. 3.2.3. Satisfactory results of sample testing will qualify the material and the production procedure.

3.1.1 *Material changed.* Any change in a coating material or method of application from that originally used to qualify the material and production procedure will require retesting in accordance with Sec. 3.2.2. and Sec. 3.2.3.

3.1.2 *Certification.* Upon request, the contractor (manufacturer) shall require the coating manufacturer or supplier to provide certification of compliance to the originally qualified coating material specifications.

Sec. 3.2 Evaluation

3.2.1 *Test coupon.* The coating material shall be applied to a test coupon consisting of a cylindrical tube or pipe approximately 6 in. (150 mm) in diameter and approximately 4 in. (100 mm) long, split lengthwise into two approximately equal sections so that both the concave and convex surfaces are accessible for examination. The material shall be the same as the product to be coated, and surface roughness of the test coupon shall be similar to

the product to be coated. The test coupon shall be coated on the convex and concave surfaces with the same thickness of protective coating material that is to be applied to the valve or hydrant parts, and it shall have the same surface preparation and application procedure that is to be used to coat the valve or hydrant parts.

3.2.2 *Disbondment or blistering.* An "X" shall be scribed with a sharp instrument through the coating material to the metal for the maximum length possible on both the concave and convex cylindrical surfaces of the test coupon. No disbondment or blistering of the coating material applied to the scribed test coupon shall be noted after 500 hours of immersion in 150°F (66°C) distilled water.

3.2.3 *Direct impact.* No cracking of the coating material under the indentor of the impact apparatus described in ASTM D2794 shall be visible without magnification after a direct impact of 20 in·lbf (2.26 J) is applied near the center of the convex and concave cylindrical surfaces of the test coupon.

Section 4—Production Testing

Sec. 4.1 General

All coated surfaces of each valve or hydrant shall be examined before assembly and, where practical, after assembly.

Sec. 4.2 Visual Examination

A visual examination of all coated surfaces shall be made for freedom from blisters, cracks, and lack of coverage.

Sec. 4.3 Holiday Test

If the purchaser requests an electrically void-free coating, the coated valve or hydrant parts shall be shown to be holiday-free when tested with a low-voltage (22½ to 80 V, with approximately 80 000 Ω) holiday detector, using a sponge saturated with a ½ percent salt (sodium chloride) solution.

Sec. 4.4 Coating Thickness

If requested by the purchaser, the film thichness of the cured coating shall be measured with a nondestructive instrument and shall not be less than the minimum coating thickness on the tested samples.

Section 5—Inspection and Rejection

Sec. 5.1 General

At the option of the purchaser, the application of the protective coating material may be inspected prior to the assembly of the valve or hydrant parts. Such inspection shall not relieve the manufacturer of the responsibility to furnish material and to perform work in accordance with this standard. The inspector shall have access to those facilities that are involved with the furnishing of materials or the performance of work under the provisions of this standard.

Sec. 5.2 Basis for Rejection

Failure to meet the criteria of Sec. 4 will be the basis for rejection or correction and retest or reexamination.

NAPKO
Pipe Coatings Division

APPENDIX B

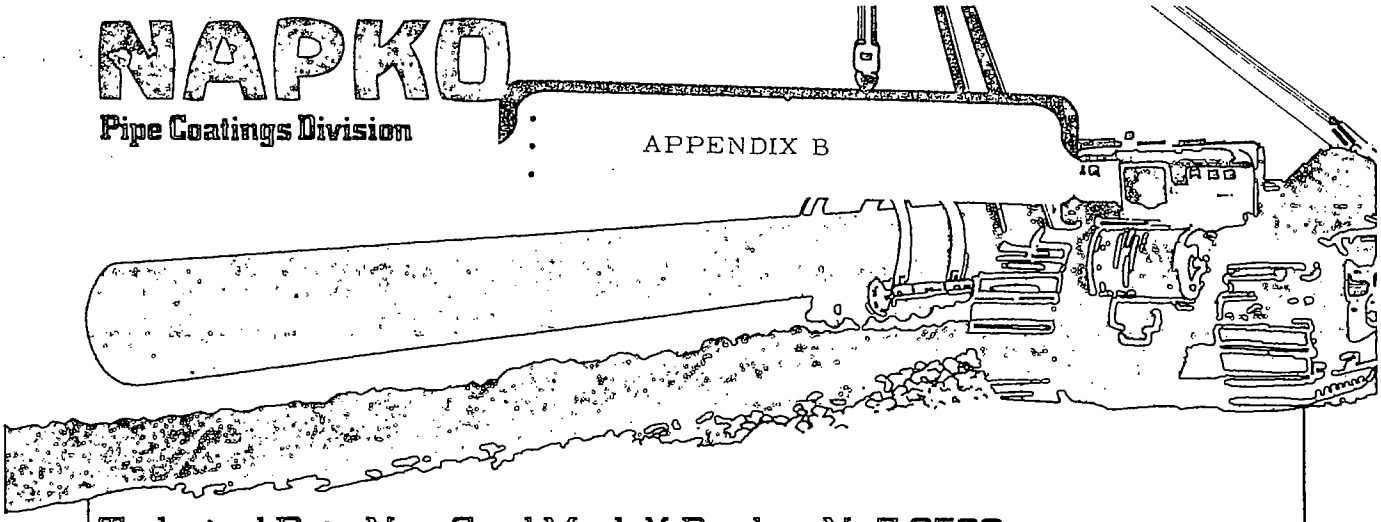

Technical Data Nap-Gard Mark X Product No.7-2500

NAP-GARD Mark X — Product No. 7-2500 is a thermosetting epoxy powder generally recommended as a coating for large diameter, heavy wall pipe. In buried service, the coating is capable of withstanding continuous operating temperatures of 210° F.

Powder Properties

Specific Gravity Liquid Displacement Method	1.41
Theoretical Coverage	136 ft.²/lb./mil.
Gel Time @ 400°F. (204° C.)	37 sec.
Shelf Life @ 77° F. (25° C.)	12 months

Physical Properties

Bending Modified ASTM G10 - 72	@ 77° F.	(25° C.)	>	2.0°/dia. length
	@ 32° F.	(0° C.)	>	2.0°/dia. length
	@ 0° F.	(-18° C.)	>	2.0°/dia. length
	@ -40° F.	(-40° C.)	>	2.0°/dia. length
	@ -76° F.	(-60° C.)	>	2.0°/dia. length
Elongation Modified ASTM G10 - 72	@ 77° F.	(25° C.)	>	4.8%
	@ 0° F.	(-18° C.)	>	4.8%
	@ -40° F.	(-40° C.)	>	3.2%
	@ -76° F.	(-60° C.)	>	1.8%
Tensile Strength ASTM D2370	11,600 psi avg.			
Impact Resistance ASTM G14 - 72 3/16" x 3" x 8" steel panels	@ 77° F.	(25° C.)		160 inch pound
	@ 32° F.	(0° C.)		160 inch pound
	@ 0° F.	(-18° C.)		60 inch pound

Abrasion Resistance	
ASTM D1044, CS17, 500 gm. wgt., 1000 cycles	0.0277 gms. wgt. loss
ASTM D1044, CS17, 1000 gm. wgt., 5000 cycles	0.198 gms. wgt. loss
Hardness	
Barcol, ASTM D2583	61 avg.
Shore D, ASTM D2240-74	90 avg.
Penetration	
ASTM G17-72 From -40° F. (-40° C.) to 240° F. (116° C.)	0%
Heat Distortion Resistance	
Differential Scanning Calorimeter	225° F. (107° C.)
Shear Adhesion	
ASTM D1002-64	> 4000 psi
Thermal Conductivity	
ASTM C177	0.19 ± 0.2 BTU/hr./ft.^{2}/ft./°F.
Water Immersion	
60 days, 122° F. (50° C.), Tapwater	0% wgt. gain
Boiling Water Immersion	
Adhesion rating on ASTM scale where: 10 = absolutely unaffected and 0 = total failure	@ 3 days — 9 @ 5 days — 9 @ 60 days — 8 @ 120 days — 7

Electrical Properties

Dielectric Strength	
ASTM D149	1200 ± 200 volts/mil
Dielectric Constant	
ASTM D150	2.04 at 1 MHz
Volume Resistivity	
ASTM D257	2.1 x 10^{15} ohm-cm.
Cathodic Disbonding	
Accelerated ASTM G8-77	
90 days, 5 volts, 5% NaCl, 77° F. (25° C.)	25 mm avg. dia.
30 days, 5 volts, 5% NaCl, 165° F. (74° C.)	12 mm avg. dia.
90 days, 5 volts, 5% NaCl, 165° F. (74° C.)	28 mm avg. dia.

General Application Parameters

1. Grit blast to NACE Near-White specifications (Swedish Standard # SA 2½).
2. Preheat pipe to approximately 450° F.
3. Apply NAP-GARD Mark X powder to meet customer specifications.
4. Follow recommended cure schedule (see opposite page).
5. Electrically inspect for holidays and repair all found.

Cure Schedule

This cure profile and schedule for NAP-GARD Mark X — Product No. 7-2500 shows the minimum time at temperature required to achieve the maximum performance properties of the coating. Because pipe cooling rates vary so widely with pipe wall thickness, no allowance has been made for heat loss from the pipe but this can be easily measured on the coating line and allowed for.

The recommended powder application temperature range is 425° F. (218° C.) to 475° (246° C.) and post heating is not a requirement.

Cure Profile

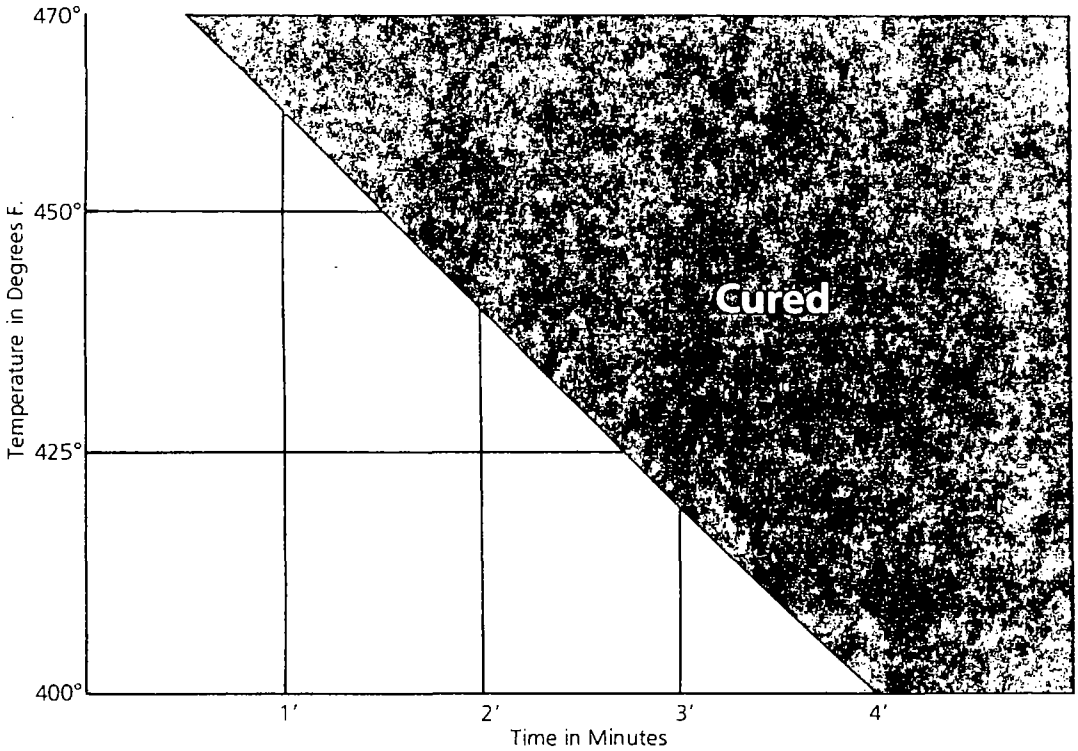

The minimum post application curing temperature (as measured on the pipe) shall conform to the following allowable cure schedules:

Pipe Temperature	Minimum Time to Quench
460° F. (238° C.)	60 seconds
450° F. (232° C.)	90 seconds
425° F. (218° C.)	175 seconds

Pipe Coatings Division
The O'Brien Corporation
P.O. Box 14509 • Houston, Texas 77021
Phone (713) 641-0661 • Cable Address: "NAPKO" Houston, Texas
Telex 762665

APPENDIX C

THE O'BRIEN CORPORATION
NAPKO PIPE COATINGS DIVISION

FULLER O'BRIEN PAINTS

PIPE
8-16-82
LSJ
AM
FILE

August 12, 1982

Mr. Mike Horton
U. S. Pipe and Foundry
P. O. Box 10406
Birmingham, Alabama 35202

Dear Mr. Horton:

This is to certify that our NAP-GARD product number 7-2500 meets the requirements of the U.S. Government F.D.A. document title 21 of the Federal regulations Section 175.300 and furthermore, that the subject material is comprised totally of ingredients listed in the document as being acceptable.

Appended is a copy of the MSDS OSHA Form 20 covering NAP-GARD material number 7-2500.

Regards,

Pierre R. Carpenter
Vice President
Pipe Coatings Division

PRC:mb

5300 Sunrise St., P. O. Box 14509 • Houston, Texas 77021 • Phone 713/641-0661
Cable Address: "NAPKO" Houston • Telex: 762-665

MATERIAL SAFETY DATA SHEET

NPCA 1-7

FOR COATINGS, RESINS AND RELATED MATERIALS

(Approved by U.S. Department of Labor. Essentially Similar to Form OSHA 20)

APPENDIX D

DATE OF PREP

Section I

MANUFACTURER'S NAME Napko Corporation

STREET ADDRESS 5300 Sunrise
P. O. Box 14509

CITY STATE AND ZIP CODE Houston, Texas 77021

EMERGENCY TELEPHONE NO (713) 641-0661

PRODUCT CLASS Epoxy Powder Coating

MANUFACTURERS CODE IDENTIFICATION 7-2500

TRADE NAME Nap-Gard Mark X

Section II — HAZARDOUS INGREDIENTS

INGREDIENT	PERCENT	TLV PPM	TLV mg/m³	LEL	VAPOR PRESSURE
This product is not a hazardous material under current Department of Labor definitions.					

Section III — PHYSICAL DATA

BOILING RANGE N/A

VAPOR DENSITY [N/A] HEAVIER [ ] LIGHTER THAN AIR

EVAPORATION RATE [N/A] FASTER [ ] SLOWER THAN ETHER

PERCENT VOLATILE BY VOLUME None

WEIGHT PER GALLON 11.85#/gal.

Section IV — FIRE AND EXPLOSION HAZARD DATA

DOT CATEGORY

FLASH POINT

LEL

EXTINGUISHING MEDIA

UNUSUAL FIRE AND EXPLOSION HAZARDS Concentrations of 0.03 oz./cu.ft. or greater in a closed area may explode with minimum ignition energy of 0.07 Joules or minimum ignition temperature of 620°C. (1150°F.)

SPECIAL FIRE FIGHTING PROCEDURES Use water to cool closed containers to prevent possible autoignition when exposed to 500°C. or higher.

Section V — HEALTH HAZARD DATA

RESHOLD LIMIT VALUE

ECTS OF OVEREXPOSURE Mechanical irritation of respiratory passage and eyes by dust.

IERGENCY AND FIRST AID PROCEDURES N/A

Section VI — REACTIVITY DATA

ABILITY [ ] UNSTABLE [X] STABLE CONDITIONS TO AVOID Direct contact with strong acid or base or oxidizing agents.

ICOMPATABILITY (Materials to avoid)

AZARDOUS DECOMPOSITION PRODUCTS Carbon monoxide, aldehydes and other organics may be generated f temperature exceeds 500°C .

AZARDOUS POLYMERIZATION [ ] MAY OCCUR [X] WILL NOT OCCUR

ONDITIONS TO AVOID N/A

Section VII — SPILL OR LEAK PROCEDURES

TEPS TO BE TAKEN IN CASE MATERIAL IS RELEASED OR SPILLED Vacuum clean.

VASTE DISPOSAL METHOD Controlled burning or land fill.

Section VIII — SPECIAL PROTECTION INFORMATION

IESPIRATORY PROTECTION Treat as "nuisance" dust. NIOSH approved respirator as required.

VENTILATION Provide general dilution or local exhaust ventilation.

PROTECTIVE GLOVES N/A

EYE PROTECTION Goggles or face shield to keep dust out of eyes, to prevent mechanical irritatio

OTHER PROTECTIVE EQUIPMENT None required.

Section IX — SPECIAL PRECAUTIONS

PRECAUTIONS TO BE TAKEN IN HANDLING AND STORING Avoid dust clouds and ignition sources. Use explosion proof electric equipment and spark proof conveying and processing equipment.(See Fire & Explosio Section)

OTHER PRECAUTIONS Use good personal hygiene.

APPENDIX E

Memorandum for Record

February 22, 1983

This is to certify that NAP-GARD Epoxy product number 7-2500 has been tested in accordance with AWWA Standard C550-81 (Protective Interior Coatings for Valves and Hydrants) and has met or exceeded all test requirements specified therein. Testing conducted on a cylindrical section of casting approximately 6 inches in diameter and 4 inches long yielded the following results:

SECTION 3.2.2 Disbondment or Blistering

Concave surface scribed with an "X" - No disbondment or blistering after 500 hours of immersion in distilled water maintained at 150° F.

Convex surface scribed with an "X" - No disbondment or blistering after 500 hours of immersion in distilled water maintained at 150° F.

SECTION 3.2.3 Direct Impact

Concave surface - No cracking of the coating material after a direct impact of 40 in-lbs impact using the apparatus described in ASTM D2794.

Convex surface - No cracking of the coating material after a direct impact of 40 in-lbs impact using the apparatus described in ASTM D2794.

U. S. PIPE AND FOUNDRY COMPANY

A. M. Horton

A. M. Horton, P. E.

APPENDIX F

Dip Angle Of Valve Bodies and Bonnets when coated Using a Fluidized Bed Powdered Coating Process.

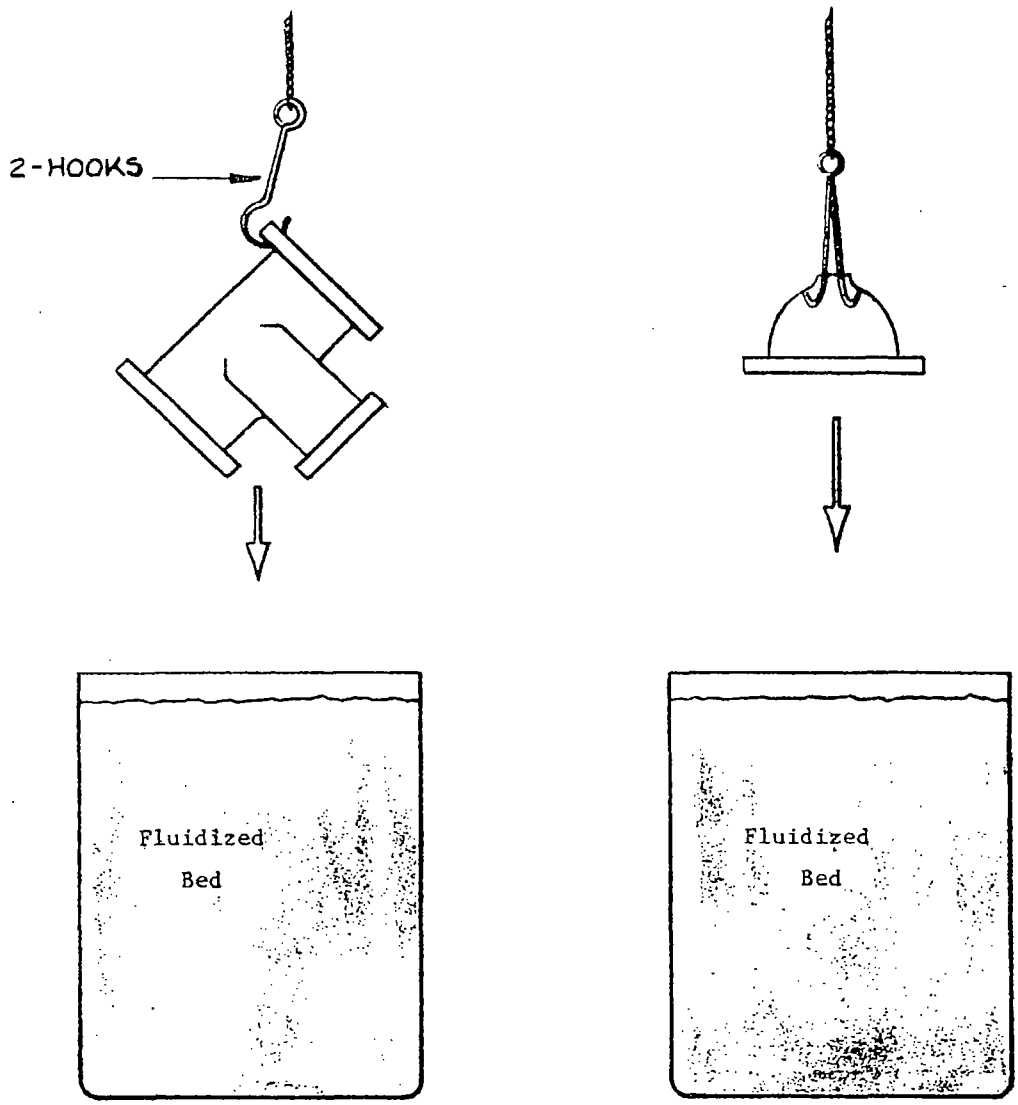

FORM E001

BASIC APPLICATION FOR EQUIPMENT / AIR POLLUTION PERMIT*

1. Name of Company U. S. Pipe & Foundry Co. 2. SIC Code 3321

3. Company Official to Contact Jim Moore 4. Phone No: ((615)) 265-4611

5. Mailing Address for Line 3: 2701 Chestnut St. Chattanooga, TN 37408
Street City State Zip Code

6. Company Address (if different from line 5): Same
Street City Zip Code

7. Application for:

[X] Installation Permit

[ ] Temporary Operating Permit
Instal. Permit No.: _____

[ ] Certificate of Operation (Initial Application)
Temp. Operating Permit No.: _____

[ ] Certificate of Operation (Renewal)
Certificate of Operation _____

8. Type of equipment for which application is made:

[X] Process Equipment (Submit E010 or Form E010A; [ ] Already Submitted)

[ ] Fuel Burning Equipment (Submit Form E011; [ ] Already Submitted)

[ ] Incineration Equipment (Submit Form E012; [ ] Already Submitted)

[ ] Odor or Miscellaneous (Specify) _____ (Submit Form E013; [ ] Already Submitted)

[ ] Minor Pollution Source—less than 1000 lbs / year and 10 lbs / day total uncontrolled contaminant emissions (Submit Form E014; [ ] Already Submitted)

9. The following forms are filed with this application: E010, E103, E106

10. Equipment Name: No. 9 Unit - Sand Handling and Preparation and Shake Out

11. If Application is for a Temporary Operating Permit or Certificate of Operation (Initial or Renewal) are there any changes since previous application in the equipment or operational procedures which might:

A) Increase, decrease, or alter process materials, fuel, refuse type, etc.
[ ] YES [ ] NO

NA B) Increase, decrease, or alter emissions or emission points
[ ] YES [ ] NO

(If either answer is YES, new forms E010, E011, E012, E013, or E014 and associated forms must be filed with this application.)

* Form must be completely filled out before it is acceptable.

MWPS012230

12. Process Weight, lb/hr, (Item 6 on Form E010), Incineration Rate, lbs/hr, (Item 3C on Form E012), or Fuel Burning Rate, 1000 BTU/hr, (Item 7C on Form E011):

460,000 lb./hr.

This is to certify that I am familiar with operations concerning this equipment and the information provided on this application is true and complete to the best of my knowledge.

Mail To:
CHATTANOOGA–HAMILTON COUNTY
AIR POLLUTION CONTROL BUREAU
3511 Rossville Boulevard
Chattanooga, Tennessee 37407

Company Official: _____
Signature

Title: Plant Engineer

Date: _____

DO NOT WRITE BELOW THIS LINE

_____ Permit Fee

_____ Inspection Approval Date Inspected: _____

_____ Reviewed by Supervisor

_____ Check Received. Amount _____ Check Number _____

_____ Entered into tape file and state keypunch form filed

_____ Registered in Suspense File

SPECIAL CONDITIONS IMPOSED: _____

Expiration Date: _____ Permit Number: _____

Approved By: _____
Director

Date: _____

MWPS012231

RECEIVED

JAN 20 1982

FORM E001

BASIC APPLICATION FOR EQUIPMENT / AIR POLLUTION PERMIT*

1. Name of Company U. S. PIPE & FOUNDRY COMPANY 2. SIC Code: 3321

3. Company Official to Contact Jim Moore 4. Phone No: 265-4611

5. Mailing Address for Line 3: 2701 Chestnut St., Chattanooga, TN. 37408
Street City State Zip Code

6. Company Address (if different from line 5): _____
Street City Zip Code

7. Application for:

☐ Installation Permit

☐ Certificate of Operation (Initial Application)
Temp. Operating Permit No.: _____

☐ Temporary Operating Permit
Instal. Permit No.: _____

☒ Certificate of Operation (Renewal)
Certificate of Operation 3321-30400399-42C

8. Type of equipment for which application is made:

☒ Process Equipment (~~Submit E010 or Form E010A: ☐ Already Submitted~~)

☐ Fuel Burning Equipment (Submit Form E011; ☐ Already Submitted)

☐ Incineration Equipment (Submit Form E012; ☐ Already Submitted)

☐ Odor or Miscellaneous (Specify) _____ (Submit Form E013; ☐ Already Submitted)

☐ Minor Pollution Source—less than 1000 lbs / year and 10 lbs / day total uncontrolled contaminant emissions (Submit Form E014; ☐ Already Submitted)

9. The following forms are filed with this application: _____

10. Equipment Name: Unit No. 9 Unit (Code 31F)

11. If Application is for a Temporary Operating Permit or Certificate of Operation (Initial or Renewal) are there any changes since previous application in the equipment or operational procedures which might:

A) Increase, decrease, or alter process materials, fuel, refuse type, etc.
☐ YES ☒ NO

B) Increase, decrease, or alter emissions or emission points
☐ YES ☒ NO

(If either answer is YES, new forms E010, E011, E012, E013, or E014 and associated forms must be filed with this application.)

* Form must be completely filled out before it is acceptable.

MWPS012232

12. Process Weight, lb/hr, (Item 6 on Form E010), Incineration Rate, lbs/hr, (Item 3C on Form E012), or Fuel Burning Rate, 1000 BTU/hr,(Item 7C on Form E011):

448,920 LB/HR

This is to certify that I am familiar with operations concerning this equipment and the information provided on this application is true and complete to the best of my knowledge:

Mail To:
CHATTANOOGA–HAMILTON COUNTY
AIR POLLUTION CONTROL BUREAU
3511 Rossville Boulevard
Chattanooga, Tennessee 37407

Company Official: James Hallwood
Signature

Title: Plant Engineer

Date: January 5, 1982

DO NOT WRITE BELOW THIS LINE

$130.00 Permit Fee

8 Inspection Approval Date Inspected: 1-7-82

Reviewed by Supervisor

Check Received. Amount 260.00 Check Number 1702450

KJH Entered into tape file and state keypunch form filed

KJH Registered in Suspense File

SPECIAL CONDITIONS IMPOSED:

Expiration Date: 1-11-83

Permit Number: 3321-30400399-42C

Approved By: [illegible]
Director

Date: January 19, 1982

MWPS012233

FORM E001

BASIC APPLICATION FOR EQUIPMENT / AIR POLLUTION PERMIT*

1. Name of Company: U. S. PIPE & FOUNDRY COMPANY 2. SIC Code: 3321

3. Company Official to Contact: Jim Moore 4. Phone No: 265-4611

5. Mailing Address for Line 3: 2701 Chestnut St., Chattanooga, TN. 37408
   Street City State Zip Code

6. Company Address (if different from line 5): _____
   Street City Zip Code

7. Application for:

   [ ] Installation Permit

   [X] Certificate of Operation (Initial Application)
   Temp. Operating Permit No.: 3321-30300899-42I

   [X] Temporary Operating Permit
   Instal. Permit No.: _____

   [ ] Certificate of Operation (Renewal)
   Certificate of Operation _____

   AP 1-22-87
   Jm

8. Type of equipment for which application is made:

   [X] Process Equipment (Submit E010 or Form E010A; [X] Already Submitted)

   [ ] Fuel Burning Equipment (Submit Form E011; [ ] Already Submitted)

   [ ] Incineration Equipment (Submit Form E012; [ ] Already Submitted)

   [ ] Odor or Miscellaneous (Specify) _____ (Submit Form E013; [ ] Already Submitted)

   [ ] Minor Pollution Source—less than 1000 lbs / year and 10 lbs / day total uncontrolled contaminant emissions (Submit Form E014; [ ] Already Submitted)

9. The following forms are filed with this application: _____

10. Equipment Name: #9 Unit - Sand Handling, Preparation, and Shake-Out.

11. If Application is for a Temporary Operating Permit or Certificate of Operation (Initial or Renewal) are there any changes since previous application in the equipment or operational procedures which might:

    A) Increase, decrease, or alter process materials, fuel, refuse type, etc.
    [ ] YES [X] NO

    B) Increase, decrease, or alter emissions or emission points
    [ ] YES [X] NO

    (If either answer is YES, new forms E010, E011, E012, E013, or E014 and associated forms must be filed with this application.)

* Form must be completely filled out before it is acceptable.

12. Process Weight, lb/hr, (Item 6 on Form E010), Incineration Rate, lbs/hr, (Item 3C on Form E012), or Fuel Burning Rate, 1000 BTU/hr,(Item 7C on Form E011):

448,920 LB/HR

This is to certify that I am familiar with operations concerning this equipment and the information provided on this application is true and complete to the best of my knowledge:

Mail To:
CHATTANOOGA–HAMILTON COUNTY
AIR POLLUTION CONTROL BUREAU
3511 Rossville Boulevard
Chattanooga, Tennessee 37407

Company Official: [signature]
Signature

Title: Plant Engineer

Date: January 20, 1981

DO NOT WRITE BELOW THIS LINE

30.00 Permit Fee

[initials] Inspection Approval Date Inspected: 1/19

[initials] Reviewed by Supervisor

[initials] Check Received. Amount 30.00 Check Number 1700581

[initials] Entered into tape file and state keypunch form filed

[initials] Registered in Suspense File

SPECIAL CONDITIONS IMPOSED: see special conditions attached.

Expiration Date: 6-15-81

Permit Number: 3321-30300399-4280

Approved By: [signature]
Director

Date: JAN 27 1981

MWPS012235

CONDITIONS OF APPROVAL

Permit number 3321-30300899-42I: "#9 unit - Sand Handling, Preparation, and Shake-Out".

a) Within 60 days of the approved date, but no later than 180 days from that date, the owner or operator shall conduct a performance test for particulates and furnish the Chattanooga-Hamilton County Air Pollution Control Bureau a written report of the results of such performance test.

b) The performance test shall be conducted and data recorded in accordance with methods and procedures specified by EPA. Particulate emissions shall be determined by the method specified in 40 CFR 60 (Method 5).

c) Performance tests shall be conducted under such conditions as the Chattanooga-Hamilton County Air Pollution Control Bureau shall specify based on representative performance of the facility. The owner or operator shall make available to the Chattanooga-Hamilton County Air Pollution Control Bureau such records as may be necessary to determine the conditions of the performance tests.

d) The owner or operator shall provide the Chattanooga-Hamilton County Air Pollution Control Bureau 30 days prior notice of the performance test to afford the opportunity to have an observer present.

e) The owner or operator shall provide or cause to be provided, performance testing facilities as follows:

   1) Sampling ports adequate to test method applicable to the facility.

   2) Safe sampling platform(s).

   3) Safe access to sampling platform(s).

   4) Utilities for sampling and testing equipment.

f) Each performance test shall consist of 3 separate runs using the applicable test method. Each run shall be conducted for the time and under the conditions specified by the Chattanooga-Hamilton County Air Pollution Control Bureau. For the purpose of determining compliance with an emission limitation, the arithmetic mean of results of the run shall apply. In the event that a sample is accidentally lost because of circumstances beyond the owner's or operator's control, compliance may, upon approval of the Chattanooga-Hamilton County Air Pollution Control Bureau, be determined using two runs.

g) This source must meet emission standards as required in the Chattanooga City Ordinance, Part II, Chapter 4, which chapter is known as "The Chattanooga Air Pollution Control Ordinance."

h) This is issued as a temporary operating permit.

Pleasant
Code 11 & 12

UNITED STATES PIPE AND FOUNDRY COMPANY
Birmingham, Alabama

April 11, 1989

APR 12 1989

MEMORANDUM FOR RECORD

From: B. G. Corbett

Subject: R/S Valve Heating & Material Handling
Project 017074

Copies To: Messrs. W. E. Fleck
W. A. Berry
J. R. Walker
L. R. Dunn
M. C. Keel
D. M. Paden
D. C. Wallace
J. S. Gable
J. L. Smallwood
R. Burger
G. Johnston
D. Urbaniak
T. Woods

A meeting was held at the Chattanooga Fittings Plant to discuss the above subject on April 7, 1989. Those in attendance were Messrs. W. E. Fleck, W. A. Berry, J. R. Walker, J. L. Smallwood, R. Burger, G. Johnston, D. Urbaniak, J. S. Gable, T. M. Wood and the writer.

The purpose of the meeting was to discuss the project scope, project schedule and job cost control.

Project Scope:

The meeting was opened by reviewing the general job scope along with the proposed layout drawings for the R/S valve facility. The job scope was updated when covered and a copy of the updated scope is attached.

During the discussion, the following additions and/or comments were made:

1) There is to be a 3'-0", 8" minimum thickness, formed concrete wall below the concrete block on the outside (east) wall addition to the product storage and assembly area.

2) The south wall, which will enclose the product storage and assembly area, is also to have a 3 foot tall, 6" minimum thickness, reinforced concrete wall.

3) The underhung crane system used for unloading castings from the oven conveyor, transferring them to the dip crane, and loading them on the cooling conveyor, should be equipped with both a 1 ton and a 1/2 ton air hoist. The 1/2 ton is desired for speed and the 1 tone for removing the dip tank from the pit.

4) The necessity of a sprinkler system in the product storage and assembly area was discussed and it was decided that the necessity to sprinkle this area should be challenged.

5) The existing air dryer should be utilized instead of purchasing another dryer.

6) The 6" rubber disc mold was discussed. It was decided that since the goal of 50,000 R/S valves per year (sizes 4" thru 12") would not be reached immediately after start-up that plant personnel could continue to investigate new or different suppliers of the mold.

Project Schedule:

The next topic presented for discussion was the project schedule. It was pointed out that the schedule, as presented, will allow for the entire project to be completed without affecting plant operations and without a shutdown. The schedule follows a critical path and some phases of this project must be 100% complete prior to beginning the next phase. All work is scheduled to be done during regular working hours and will begin by May 1, 1989 or sooner. The scheduled completion date for this project is January 31, 1990.

Job Cost Control:

Standard procedures will be followed for job cost control.

B. G. Corbett

B. G. Corbett

BGC/dmh

Attachment

Project 017074 (Revised 4/10/89)

Job Scope

The following items cover material, equipment, and installation for updating the existing R/S valve facility to a production capability of 50,000 valves per year on a two-shift operation.

1. Prepare Site

   a. Relocate fire line labor and material.

   b. Relocate sprinkler lines labor and material.

   c. Remove loading dock under storage shed.

   d. Break-out raised concrete floor under storage shed.

   e. Excavate and haul out raised floor rubble.

2. Material Handling Equipment and Support Steel

   a. Clean castings conveyor thru oven includes; drive, chain, monorail, turns, etc., support steel for conveyors system, cage guard over traffic areas.

   b. Cooling conveyor includes; drive, chain, monorail, turns, etc., support steel.

   c. Relocate 2 sets of runways and 5 overhead hoist power cranes (1-1 ton and 4-1/2 ton) for surface prep. with bench and grinders.

   d. Overhead cranes (1 ton air and 1/2 ton air) at dip station with support steel.

   e. Three overhead cranes (1/2 ton air) at assembly and test with support steel, two bridges and hoists with each 40 ft. run.

   f. Miscellaneous hooks for handling and transporting castings.

   g. Slider belt conveyor @ grinder benches.

   h. Jib crane for dip operation.

3. Installation of Mechanical

   a. Clean castings conveyor thru oven with support steel and cage.

   b. Cooling conveyor with support steel and cage.

   c. Jib crane (1000#) at dip station.

   d. Overhead crane at dip station and support steel for crane.

   e. Overhead crane at assembly and test, support steel for crane.

   f. Dip station includes hoist, rotator, jib, tank, air manifold, etc.

   g. Compressed air system includes air compressor, air receiver, piping, valves, and controls.

   h. Furnace includes assembly of oven components, blowers, piping, ducting.

   i. Test and assembly station includes relocating four existing test units and installing three stations of assembly tables and bins.

4. Dip Station Equipment

   a. Dip hoist (electric 1000#).

   b. Rotator crane hook (air, 500#).

   c. Jib crane.

   d. Air manifold.

   e. Mobile screening system to remove tramps from powder and return to fluid bed.

   f. One electro-static gun.

   g. Use existing tank.

5. Compressed Air System Equipment

   a. 75 HP compressor Joy Model 220 or equal.

   b. Air receiver.

   c. Air piping.

   d. Controls and valves.

6. Furnace Equipment (Natural Gas Only)

   a. Furnace with burners, refractory, blowers, safety train, recirc., fans, motors, controls.

   b. Piping, valves, meters, regulator.

   c. Vent ducting, dampers, etc.

7. Assembly and Test Stations

   a. Bins and tables for three assembly stations.

8. Electrical

   a. Covers all electrical material and installation.

9. Engineering

   a. Covers General Office and Contract Engineering, includes mechanical and electrical.

10. Freight

    a. Covers freight charges for purchased material.

11. Dust Collector System Equipment

    a. Dust collector, 10,000 ACFM.

    b. Fan, motor.

    c. Hood with blow-off manifold.

d. Ducting.

e. Dampers.

12. Install Dust Collector System

13. Building Improvements Material

a. Enclose Finish Product Storage and Assembly & Test Area, Includes:

Columns for roof support and wall enclosure
Struts for wall enclosure
Roof beams for roof extension
Purlins for roof extension
Doors
Siding for wall enclosure
Roof sheeting for roof extension
Heating equipment (radiant type space heaters)
Concrete block wall (1 hour fire protection)

14. Foundations and Floors

a. Foundations for building columns.

b. Concrete floors for area under roof extension, and area where the loading dock and raised floor were removed.

c. Three foot high concrete wall before concrete block and siding.

15. Sprinkler System

Covers sprinkler system for assembly and test building and finished product storage, material and installation.

16. Installation of building improvements.

Covers installation of building, structural steel, sheeting, insulation, doors, etc.

17. Purchase one 6" rubber disc mold.

18. Interest

Covers interest charged to AFE.

UNITED STATES PIPE AND FOUNDRY COMPANY

Chattanooga Valve & Fittings Plant

P.O. DRAWER 311

CHATTANOOGA, TENNESSEE 37401

December 11, 1980

Mr. Mike Poe
Chattanooga-Hamilton County
Air Pollution Control Bureau
3511 Rossville Blvd.
Chattanooga, TN 37407

Subject: Unit No. 4, Permit #3321-30400399-31

Dear Mr. Poe:

Please find attached the permit forms requested in your meeting on December 3, 1980, with Mr. H. R. Sanders and Mr. J. F. Pleasant of our General Office Environmental Services Group. The specific forms included are: #106 "Pollution Estimation Form" and E010 "Process Equipment Application:. The addition of these forms should complete U. S. Pipe's application for a Certificate of Operation submitted to you on November 20, 1980.

If there are any questions, please do not hesitate to call me.

Very truly,

UNITED STATES PIPE AND FOUNDRY COMPANY

James L. Smallwood,
Plant Engineer

JLS:gjp

Attachments

9. Actual Particulate Emissions:

A. Uncontrolled Emissions: 13.25 lbs/hr (File Form E106)

B. Actual Emissions: - lbs/hr (Submit stack test report)

OR

Estimated Emissions:

$\frac{(100\% - \text{Control Efficiency } (\%))}{100\%}$ x Uncontrolled Emissions = 13.25 lbs/hr

10. Actual Sulfur Oxide Emissions:

Specify air required for process: _____ SCFM

IA A. Uncontrolled Emissions: _____ lbs/hr (File Form E106)

B. Actual Emissions: _____ lbs/hr (Submit stack test report)

OR

Estimated Emissions:

$\frac{(100\% - \text{Control Efficiency } (\%))}{100\%}$ x Uncontrolled Emissions = _____ lbs/hr

11. Allowable Nitrogen Oxide Emissions:

A. Nitric Acid Plants Emission Limitation (Allowable emissions will be in Item 7 on Form E101): _____ lbs/hr as NO_2

IA

B. All other process equipment emission limitations: ☐ No Requirement

12. Nitrogen Oxide Emissions (lbs/hr as NO_2):

A. Uncontrolled Emissions: _____ lbs/hr (File Form E106)

IA B. Actual Emissions: _____ lbs/hr (Submit stack test report)

OR

Estimated Emissions:

$\frac{(100\% - \text{Control Efficiency } (\%))}{100\%}$ x Uncontrolled Emissions = _____ lbs/hr

13. Other Air Contaminant Emissions - Specify:

AIR CONTAMINANT	AMOUNT EMITTED (lbs/hr)

IA

☐ The values shown were determined by actual stack test. (Submit a copy of stack test with full details).

☐ The values shown were estimated. (File Form E106 for each pollutant shown).

FORM: E010

PROCESS EQUIPMENT APPLICATION

1. Name of Company (as shown on Line 1, Form E001): U. S. Pipe & Foundry Company

2. Equipment Name (as shown on Line 10, Form E001): Unit No. 4

3. Type of Process: Castings Shakeout

4. Major Raw Materials Processed: Iron, Sand.

5. Date of installation, initial start-up, or alternation (such that potential emissions were increased) of equipment or device for which permit is applied for:

   [x] Before January 1, 1973 - Schedule 1

   [ ] After January 1, 1973 - Schedule 2

6. Process Weight: 173,520 lbs/hr

   (This is the total weight of all materials introduced into the process expressed in lbs/hr.)

7. Control Equipment Data:

   A. [x] Emissions Uncontrolled

   B. [ ] Baghouse (File Form E102)

   C. [ ] Wet Collecting Device (File Form E103)

   D. [ ] Electrostatic Precipitator (File Form E104)

   E. [ ] Inertial Separators (File Form E105)

   F. [ ] Other - Specify _____

8. Control Equipment Efficiency for each pollutant emitted by this equipment (from appropriate Form E102, E103, E104, E105, E107 or enter zeros if A is checked in Item 7):

	% EFFICIENCY
Particulates	0
SO_x	
NO_x	
CO	
Hydrocarbons	
Other:	

MWPS012245

14. Those emissions indicated in Item 13 may at times under normal operating conditions cause (check one or more):

- [ ] Odors
- [ ] Eye Irritations
- [ ] Property Damage
- [ ] Other nuisances outside of plant property
- [ ] Health Effects
- [x] No environmental damage

15. Emission Point Data:

Stack Height (emission point) above ground:	-	ft
Ground Elevation above sea level at stack base:	-	ft
Stack Diameter:	-	ft
Volume of gas discharged into atmosphere:	-	cfm
Gas exit temperature:	-	°F
	-	

16. Average Equipment Operating Time:

A.	Daily	24	hours
B.	Weekly	7	days
C.	Yearly	52	weeks

This is to certify that I am familiar with the operations concerning this equipment and that the information provided on this application is true and complete to the best of my knowledge. This form must be completely filled out before acceptable.

Mail To:
CHATTANOOGA-HAMILTON COUNTY
AIR POLLUTION CONTROL BUREAU
3511 Rossville Boulevard
Chattanooga, Tennessee 37407

Company Official: _____ Signature

Title: Plant Engineer

Date: 12/4/80

NOTE: Equipment must also meet Visible Emission Code.

DO NOT WRITE BELOW THIS LINE

_____ Information approved and entered on Permit Inspection Form (Engineer)

_____ lbs/hr (allowable particulate emissions) _____ PPM by volume as SO_2

UTM Coordinates of Company: EW _____ NS _____

This form corresponds to permit number: _____

Special Notations: _____

POLLUTION ESTIMATION FORM

FORM: E106

1. Name of Company (as shown on Line 1, Form E001): U. S. Pipe & Foundry Company

2. Equipment Name (as shown on Line 10, Form E001): Unit No. 4

3. Type of pollutant for which estimation is made: Particulates

4. Pollutant Emission Factor (PEF): 1.978 lb/ton
(Give value & units in lbs/ton, lbs/lbs, lbs/gal, gr/ft^3, etc.)

Source of Emission Factor: Engineering Estimate

5. Uncontrolled Pollution Emission Rate:

1.978 (PEF from Item 4) x 6.7 lb/ton* (Give operating rate for this equipment and the appropriate units in either lbs/hr, tons/hr, gal/hr or CFM) = 13.25 (Give value & units)

*Based on assumption of 12/1 Sand/Iron Ratio.

6. Uncontrolled Pollution Emission Rate: 13.25 (from Item 5 convert to lbs/hr) lbs emitted/hr

This is to certify that I am familiar with the operations concerning this equipment and that the information provided on this application is true and complete to the best of my knowledge. This form must be completely filled out before acceptable.

Mail To:
CHATTANOOGA-HAMILTON COUNTY
AIR POLLUTION CONTROL BUREAU
3511 Rossville Boulevard
Chattanooga, Tennessee 37407

Company Official: [signature]
Signature

Title: Plant Engineer

Date: 12/4/80

DO NOT WRITE BELOW THIS LINE

_____ Engineer Approval

This form corresponds to permit number: _____

Special Notations: _____

RECEIVED

MWPS012247

Chatta. Cupola Control Review

Electric Controls and Systems Inc.

Greg Bray
Greg Dunmas

CALL REPORT- UNITED STATES PIPE AND FOUNDRY COMPANY

On or about the 10th of December 2002 I was contacted by Mr. Harold (Bob) Ballah of WRIB Manufacturing about a quench water problem at US Pipe in Chattanooga, Tennessee. Bob indicated that WRIB was installing a lower cupola section at the facility and that there was a severe problem with quench water being transferred to a Harsell baghouse. I told Harold that I would be interested in looking at the system and see if I could be of some assistance. On December 12th, I received a cell phone conference call from Larry King of WRIB who was on site for cupola startup; Mr. Gregg Creehan, Plant Engineer, US Pipe, and Mr. Red Walls, Maintenance Supt. at US Pipe, and we discussed what the problem might be. As I had a prior commitment on another project and was leaving on Christmas vacation for ten days, I told Gregg I would contact EC&S in Birmingham, as I have worked with them on other cupola and quenching projects and see if they could fill in during my absence. EC&S is an electrical and piping contractor, are familiar with US Pipe in Chattanooga and located only two hours away.

I called EC&S on December 19, 2002 and confirmed that they would be interested in working on the project and that they would contact Gregg Creehan directly and set up a time for them to review the problem. However, through phone tag and email tag the two parties were not able to establish a meeting.

Unfortunately, I did not follow up on the progress of solving the water problem, and on January 13, 2003 I received an email requesting help, and when was I coming to Chattanooga. Because of a prior commitment in Ohio I was not able to fly out until Thursday, January 16th. I would fly to Birmingham, AL and Greg Bray, president of EC&S and I would drive up to Chattanooga. However, that day there was a snow and ice storm moving through Kentucky and Tennessee and the visit was postponed until Friday, January 17, 2003.

Mr. Bray and I arrived at US Pipe at 11:15 AM, contacted Mr. Creehan and proceeded to the cupola area to look at the controls and water quenching system while it was in operation.

Baghouse

We first looked at the baghouse and water was coming out of several slide valves on the bottom of the dust hoppers above a screw conveyor, obviously they were getting quench water carrying over from the hot gas quenching system.

Control Room

We then went to the control room to look at the control system and instruments. The cupola quenching system has eight valves for controlling four rows of nozzles or a total of 40 nozzles located above the afterburner system in the cupola stack.

There are 4 valves controlling 2 rows of nozzles or a total of 20 nozzles in a drop out chamber ahead of the Escher for over temperature control of the Escher. The quencher consists of 10 valves controlling 5 rows of nozzles, or a total of 60 nozzles in the final quencher before the baghouse induced draft fan.

When we arrived there were 4 valves on the cupola system energized none on the drop out box, and 6 or 7 of ten on the final quencher. The baghouse inlet temperature was holding at about 360 degrees F.

Water System

We then proceeded to trace the water system from the high pressure quench pumps, to the nozzle control valves, to the nozzle manifolds and finally the nozzles themselves.
The 10 primary quench valves located on the cupola deck control the quench nozzles and appeared to be cycling properly. The temperature to the Escher was holding with in set point and the nozzles in the drop out box didn't cycle, which would indicate there was not an over temperature to the Escher. We were told that the drop out nozzles did cycle during tap out and burn down, but didn't stay on for long.

We then proceeded up to the primary nozzles located on the cupola shell. In looking at the valves located adjacent to the nozzles above the afterburners, we couldn't tell of they were cycling properly as the drain side of the three way valve was buried in sand in the drain moat. There are 8 valves for the primary quench system; two valves for each row of nozzles. There is a valve attached to each of two water manifold rings per row of nozzles wrapping around the circumference of the cupola. Each ring controls 5 nozzles, so in effect there are two zones at each row of rings or a total of 8 zones with 40 nozzles.

The drop out box quench system is similar with 4 valves controlling two sets of water manifolds rings per row, each ring controlling 5 nozzles or a total of 4 zones with 20 nozzles.

The final quencher has five rows of 12 nozzles with two valves per row on two water manifolds per row or a total of 60 nozzles, 6 nozzles on each manifold or a total of ten zones. This valve manifold has 11 valves, 10 for the quencher water and one for a slag spray nozzle. Again we couldn't tell if the drain portion of the system was working because of the sand and ash in the moat.

This drain down feature is necessary to drain the water out of the nozzle after it shuts off to prevent evaporating the water and leaving the solids at the tip, which would eventually clog the tip and stop water flow.

We did find nozzles on the deck with various lengths of SS pipe, and they looked as if they had been replaced as they had hardened material attached to them. After investigation the nozzles are a Spraying Systems VeeJet H1/8U USS 8010. These are the same nozzles as specified and furnished in the original installation in 1977, even though we were told that they were once replaced with a spiral type nozzle at one time. This type of nozzle is a slot type of nozzle producing a narrow fan type spread and typically used for descaling and debarking operations.

After examination we couldn't tell if the nozzles were working or not. We assumed they were as the temperature was holding within set point at the Escher. However, there is a tremendous amount of water being carried over to the baghouse. Greg Bray and I concluded that the majority of water is coming from the final quencher from lack of control or nozzle design.

We then proceed back to engineering to locate drawings and review how the system was designed originally. We did locate several original drawing for the fabricated equipment, electrical controls and piping systems.

We did confirm that the control system has been updated from the original relay type control to an AB processor type controller, and that the nozzles have been changed back to the original nozzles. After acquiring the necessary data from engineering we proceeded back to the cupola area for another look.

The cupola was still melting at approximately 25 ton per hour melt rate. The primary quench nozzles in the cupola were still cycling between 3 and 5 zones, with the drop out box nozzles off, but the final quench was cycling between 7 and 8 zones, with the baghouse inlet at 360 degrees F. We went outside and water was running out of the valve at the bottom of the quencher, even more water was being introduced to the system.

Recommendations

1. Clean out the two moats for the quencher drain valves to observe drain down.

2. Check gauges on the high pressure pump manifolds, (they both read 300 PSI) to see if they are not stuck at that position. I like to install a liquid filled dial gauge and a device with a push button for checking pressure only as required. The gauge can also be replaced if necessary with out shutting off the pump.

3. Install a quick connect on each of the water manifold rings (at the valve on the end of each ring) or a total of 22 connectors. These will be used to check the water pressure at each of the manifold rings when they are operating and under pressure.

4. Check and repair water and air leaks on the quencher valves, piping manifolds and nozzle piping, before any pressure checks are performed. Some manifolds have holes in them.

5. Clean and repair all of the nozzles in the system, and try to center the nozzles in the tubes and set the nozzle into the vessel at the required depth to prevent water from hitting refractory or any other obstruction, which would prevent good atomization.

6. When the system in not operating install a pressure gage on each quencher manifold ring one at a time, and force on the valve with the controller and check the operating pressure on each one. Log the results. Also check the drain back feature of the three way quench valves for proper draining and the operation of the control panel lights.

7. Verify that the control thermocouples and control devices are operating and calibrated properly.

When the above checks have been completed and any problems have been fixed the system will need to be run to verify changes.

One item of concern is the nozzles. With the VeeJet H1/8U 8010 nozzle the water fan orientation is somewhat critical, obviously the nozzles in the cupola are working, as the temperature is being controlled. There is no way of telling if the nozzle is horizontal (which is preferred) or where it is pointed. These nozzles should all be installed in the same horizontal plane and project into the vessel the proper length. The nozzles need to be screwed into the pipe tight, marked to tell which plane the jet is in and then installed with a union to be able to set and tell by looking at the piping which way it is pointing.

When Sentinel Systems, Inc. installs a system, if we are using direct pressure nozzles, we always use a BETE or equal P or PJ type nozzle as it has superior atomization, and orientation is not a problem.

After the pressure checks are completed on the system, calculations need to be done to determine the proper type, size and amount of nozzles for your system.

One other item, is that with today's technology and the pending clean air act, almost all of the secondary or final quenchers or air coolers are dry type, utilizing either Escher style or other air to air heat exchangers. These units are much more efficient, do not require any internal water sprays, and extracted heat can be used for space heating, core wash drying, charge drying, etc.

Sentinel Systems, Inc. and EC&S is prepared to assist US Pipe in any way possible to correct the quencher water problem. If you would require assistance in checking out the water system or the electrical controls, we would be ready to work with your maintenance people to solve the problem.

END

Mr. Pleasant

UNITED STATES PIPE AND FOUNDRY COMPANY

Chattanooga Valve & Fittings Plant
P.O. Drawer 311
CHATTANOOGA, TENNESSEE 37401

September 17, 1997

Jay Ware
Chattanooga-Hamilton County
Air Pollution Control Bureau
3511 Rossville Blvd.
Chattanooga, TN 37407

Dear Jay:

This letter is a modification of the letter I sent to Mark Stone on August 19, 1997. The changes I have made in response to your request are: 1) I broke down the BC-61 acid and assigned quantities to both the Pepset and the Airset/#10 Unit operations according to the ratio of the binders, 2) I included a statement about the maximum sulfur content of the coke, and 3) I did not include the attachments.

The following information is provided in accordance with permit special conditions:

Permits –12, -13, -36, -37, -42, -43, -51, & -52

See the attached Paint Summary.

Permits –32 & -33

Core Chemical	Borden Designation	Usage (lbs)
Pepset Binder	324	90,840
Airset/#10 Binder	975	865,240
Pepset Acid	BC-61	50,125
Airset/#10 Acid	BC-61	477,435

(Isocure chemical usages were previously submitted.)

Permit –40

Readings on the operating hour meters for the combustion air blowers at the cupola are as according to the following table:

	North	South
7Aug97	34,426	34,185
Aug 96	32,881	32,232
Hours of Operation	1,545	1,953
Total Hours	3,498	

The average sulfur content in the coke burned was 0.661%.
The maximum sulfur content in the coke burned was 0.70%.

Permits –44 & -46

Readings on the operating hour meters for the Sand Reclaimer baghouse (-44) and the Screening Drum cyclone (-46) are as according to the following table:

	-44	-46
7Aug97	2215	9978
Aug 96	1716	8136
Hours of Operation	499	1842

As far as I can tell this is all the information required by special conditions for our permits. If I have omitted any required information, do not hesitate to call me at 752-3912.

Very truly yours,

Dennis Urbaniak

Dennis Urbaniak
Project Engineer

cc: John Pleasant

ROUGH DRAFT

Mr. Mike Poe
Chattanooga/Hamilton County
Air Pollution Control Bureau
3511 Rossville Blvd.
Chattanooga, TN 37407

Subject: Unit #4, Permit #3321-30400399-31

Dear Mr. Poe:

Please find attached the permit forms requested in your meeting on December 3, 1980, with Mr. H. R. Sanders and Mr. J. F. Pleasant of our General Office Environmental Services Group. The specific forms included are: E106 "Pollution Estimation Form" and E010 "Process Equipment Application". The addition of these forms should complete U. S. Pipe's application for a Certificate of Operation submitted to you on November 20, 1980.

If there are any questions, please do not hesitate to call me.

Very truly yours,

J. Smallwood

bcc/Mr. J. F. Pleasant

FORM: E010

PROCESS EQUIPMENT APPLICATION

1. Name of Company (as shown on Line 1, Form E001): U. S. Pipe & Foundry Company

2. Equipment Name (as shown on Line 10, Form E001): Unit No. 4

3. Type of Process: Castings Shakeout

4. Major Raw Materials Processed: Iron, Sand.

5. Date of installation, initial start-up, or alternation (such that potential emissions were increased) of equipment or device for which permit is applied for:

   [x] Before January 1, 1973 - Schedule 1

   [ ] After January 1, 1973 - Schedule 2

6. Process Weight: 173,520 lbs/hr

   (This is the total weight of all materials introduced into the process expressed in lbs/hr.)

7. Control Equipment Data:

   A. [x] Emissions Uncontrolled

   B. [ ] Baghouse (File Form E102)

   C. [ ] Wet Collecting Device (File Form E103)

   D. [ ] Electrostatic Precipitator (File Form E104)

   E. [ ] Inertial Separators (File Form E105)

   F. [ ] Other - Specify _____

8. Control Equipment Efficiency for each pollutant emitted by this equipment (from appropriate Form E102, E103, E104, E105, E107 or enter zeros if A is checked in Item 7):

	% EFFICIENCY
Particulates	0
SO_x	
NO_x	
CO	
Hydrocarbons	
Other:	

MWPS012255

9. Actual Particulate Emissions:

A. Uncontrolled Emissions: 13.25 lbs/hr (File Form E106)

B. Actual Emissions: - lbs/hr (Submit stack test report)

OR

Estimated Emissions:

$\frac{(100\% - \text{Control Efficiency } (\%))}{100\%}$ x Uncontrolled Emissions = 13.25 lbs/hr

10. Actual Sulfur Oxide Emissions:

Specify air required for process: _____ SCFM

NA

A. Uncontrolled Emissions: _____ lbs/hr (File Form E106)

B. Actual Emissions: _____ lbs/hr (Submit stack test report)

OR

Estimated Emissions:

$\frac{(100\% - \text{Control Efficiency } (\%))}{100\%}$ x Uncontrolled Emissions = _____ lbs/hr

11. Allowable Nitrogen Oxide Emissions:

A. Nitric Acid Plants Emission Limitation (Allowable emissions will be in Item 7 on Form E101): _____ lbs/hr as NO_2

NA

B. All other process equipment emission limitations: ☐ No Requirement

12. Nitrogen Oxide Emissions (lbs/hr as NO_2):

A. Uncontrolled Emissions: _____ lbs/hr (File Form E106)

NA

B. Actual Emissions: _____ lbs/hr (Submit stack test report)

OR

Estimated Emissions:

$\frac{(100\% - \text{Control Efficiency } (\%))}{100\%}$ x Uncontrolled Emissions = _____ lbs/hr

13. Other Air Contaminant Emissions - Specify:

AIR CONTAMINANT	AMOUNT EMITTED (lbs/hr)

NA

☐ The values shown were determined by actual stack test. (Submit a copy of stack test with full details).

☐ The values shown were estimated. (File Form E106 for each pollutant shown).

14. Those emissions indicated in Item 13 may at times under normal operating conditions cause (check one or more):

- [ ] Odors
- [ ] Eye Irritations
- [ ] Property Damage
- [ ] Other nuisances outside of plant property
- [ ] Health Effects
- [x] No environmental damage

15. Emission Point Data:

Stack Height (emission point) above ground:	-	ft
Ground Elevation above sea level at stack base:	-	ft
Stack Diameter:	-	ft
Volume of gas discharged into atmosphere:	-	cfm
Gas exit temperature:	-	°F
	-	

16. Average Equipment Operating Time:

A.	Daily	24	hours
B.	Weekly	7	days
C.	Yearly	52	weeks

This is to certify that I am familiar with the operations concerning this equipment and that the information provided on this application is true and complete to the best of my knowledge. This form must be completely filled out before acceptable.

Mail To:
CHATTANOOGA-HAMILTON COUNTY
AIR POLLUTION CONTROL BUREAU
3511 Rossville Boulevard
Chattanooga, Tennessee 37407

Company Official: _____
Signature

Title: Plant Engineer

Date: 12/4/80

NOTE: Equipment must also meet Visible Emission Code.

DO NOT WRITE BELOW THIS LINE

_____ Information approved and entered on Permit Inspection Form (Engineer)

_____ lbs/hr (allowable particulate emissions) _____ PPM by volume as SO_2

UTM Coordinates of Company: EW _____ NS _____

This form corresponds to permit number: _____

Special Notations: _____

POLLUTION ESTIMATION FORM

FORM: E106

1. Name of Company (as shown on Line 1, Form E001): U. S. Pipe & Foundry Company

2. Equipment Name (as shown on Line 10, Form E001): Unit No. 4

3. Type of pollutant for which estimation is made: Particulate

4. Pollutant Emission Factor (PEF): 1.978 lb/ton
(Give value & units in lbs/ton, lbs/lbs, lbs/gal, gr/ft^3, etc.)

Source of Emission Factor: Engineering Estimate

5. Uncontrolled Pollution Emission Rate:

1.978 (PEF from Item 4) x 6.7 lb/ton* (Give operating rate for this equipment and the appropriate units in either lbs/hr, tons/hr, gal/hr or CFM) = 13.25 (Give value & units)

*Based on assumption of 12/1 Sand/Iron Ratio.

6. Uncontrolled Pollution Emission Rate: 13.25 (from Item 5 convert to lbs/hr) lbs emitted/hr

This is to certify that I am familiar with the operations concerning this equipment and that the information provided on this application is true and complete to the best of my knowledge. This form must be completely filled out before acceptable.

Mail To:
CHATTANOOGA-HAMILTON COUNTY
AIR POLLUTION CONTROL BUREAU
3511 Rossville Boulevard
Chattanooga, Tennessee 37407

Company Official: _____
Signature

Title: Plant Engineer

Date: 12/4/80

DO NOT WRITE BELOW THIS LINE

_____ Engineer Approval

This form corresponds to permit number: _____

Special Notations: _____

MWPS012258

Cleaning Building Exhaust
from Hand Grinding of Castings

Assumptions for calculating air changes:

1. All rooftop or thru wall ventilators operate all the time.
2. No derating factors have been applied to ventilators for build up, building winterizing (sealing), etc.
3. All ventilators exert uniform flow influence throughout the entire contained building volume.
4. All controlled air flows (baghouse exhaust, etc.) have been neglected in calculating air changes.
5. TOSHA breathing zone dust concentrations are representative of the entire building enclosed volume.
6. All building down draft influences, meteorological effects, natural draft and infiltration have been neglected.

Cleaning Sheds #1, 3, 9

Building Volume (cu. ft.)

#1 = 1,036,881
#3 = 564,750
#9 = 185,583
1,787,214 cu. ft. volume

Exhaust Volume (cu. ft./min.)

	No. fan	Model #	CFM	SP	Volume (Total)
#1 =	2	426228	27,850	0"	
			26,400	⅛"	52,800
#3 =	6	426228	27,850	0"	
			26,400	⅛"	158,400
#9 =	17	36R524	20,710	0"	
			18,960	⅛"	322,300
					533,520 CFM

Time required for 1 volume change of buildings 1,3,9:

1,787,214 cu. ft. ÷ 533,520 cu.ft./min. = 3.34 mins.

Air changes per hour:

60 mins./hr. ÷ 3.34 min./change = 17.96 ≈ 18

Building Exhaust Volume (Air) CFM/hr:

1,787,214 cu. ft. x 18/hr. = 32.2 MM cu. ft./hr.

or 32.2 MM cu. ft./hr. x 0.02832 = 911.9 M m^3/hr.

Cleaning Shed #2

Building Volume (cu. ft.)

#2 = 400,000 cu. ft.

Exhaust Volume (cu. ft./min. powered)

Prop. fan F1 & F2	CFM	SP	Volume (Total)
	58,600	0"	
	50,500	½"	50,500
			x 2
			101,000 cu. ft./min.

Time required for 1 volume change of building #2:

400,000 cu. ft. ÷ 101,000 cu. ft./min. = 3.96 mins.

Air changes per hour:

60 min./hr. ÷ 3.96 min./change = 15.2 changes/hr.

Building Exhaust Volume (Air) CFM/hr:

400,000 cu. ft./change x 15.2 changes/hr. = 6.08 MM cu. ft./hr.

or 6.08 MM cu. ft./hr. x 0.02832 = 172.2 M m^3/hr.

Calculate potential mass of emissions if all breathing zone grinding dust exits the building through roof top ventilators. This also assumes that the larger particles segregated by the clone settle out in the bulding, but also assumes uniform dust concentration throughout the cleaning sheds.

Cleaning Sheds #1, 3, 9 -

$$911.9 \text{ M } m^3/\text{hr exhaust} \times 1.25 \text{ mg}/m^3 \times \frac{\text{lb.}}{453.6\text{gm}} \times \frac{\text{gm}}{1000\text{mg}} =$$

2.5 lb/hr. dust

Cleaning Shed #2 -

$$172.2 \text{ M } m^3/\text{hr. exhaust} \times 1.25 \text{ mg}/m^3 \times \frac{\text{lb.}}{453.6\text{gm}} \times \frac{\text{gm}}{1000\text{mg}} =$$

0.47 lb./hr dust

Employee Breathing Zone Dust Concentrations

Dust concentrations have been measured in the breathing zones of employees grinding castings in the grinding/finishing areas. The following table shows concentrations of respirable dust (<2-5 microns dia.) as measured by standard OSHA testing methods for respirable dust.

Date	Location	Job Category	Rotoclone On	Rotoclone Off	Dust Exposure	% Free Silica
1982	#3	Hand Grind	X		1.2	8.7
10/93	#3	Hand Grind		X	0.474 *	3.0
	#3	Blast		X	0.713	4.3
	#1, #3	Foreman		X	0.786	3.4
	#1	Belt #2		X	0.478	4.8
12/93	#3	Inspector		X	0.585	7.0
	#3	Hand Grind		X	4.02 *	10.4
	#1	Hand Grind		X	1.60	4.9
	#3	Inspector		X	0.6	5.7
	#3	Hand Grind		X	2.98	5.4
	#1	Hand Grind		X	2.22	8.2

Breathing zone dust concentrations

Rotoclones on	1.2 mg/m^3
Rotoclones off (all data)	1.45 mg/m^3
(deleting high/low)	1.25 mg/m^3

RECEIVED

JAN 20 1982

Plant Engineering

FORM E001

BASIC APPLICATION FOR EQUIPMENT / AIR POLLUTION PERMIT*

1. Name of Company U. S. PIPE & FOUNDRY COMPANY 2. SIC Code: 3321

3. Company Official to Contact Jim Moore 4. Phone No: 265-4611

5. Mailing Address for Line 3: 2701 Chestnut St., Chattanooga, TN. 37408
Street City State Zip Code

6. Company Address
(if different from line 5): _____
Street City Zip Code

7. Application for:

- [ ] Installation Permit
- [ ] Certificate of Operation (Initial Application)
  Temp. Operating Permit No.: _____
- [ ] Temporary Operating Permit
  Instal. Permit No.: _____
- [X] Certificate of Operation (Renewal)
  Certificate of Operation 3321-30400399-31C

8. Type of equipment for which application is made:

- [X] Process Equipment (~~Submit E010 or Form E010A;~~ [ ] ~~Already Submitted~~)
- [ ] Fuel Burning Equipment (Submit Form E011; [ ] Already Submitted)
- [ ] Incineration Equipment (Submit Form E012; [ ] Already Submitted)
- [ ] Odor or Miscellaneous (Specify) _____ (Submit Form E013; [ ] Already Submitted)
- [ ] Minor Pollution Source—less than 1000 lbs / year and 10 lbs / day total uncontrolled contaminant emissions (Submit Form E014; [ ] Already Submitted)

9. The following forms are filed with this application: _____

10. Equipment Name: Unit No. 4 (Code 34F)

11. If Application is for a Temporary Operating Permit or Certificate of Operation (Initial or Renewal) are there any changes since previous application in the equipment or operational procedures which might:

A) Increase, decrease, or alter process materials, fuel, refuse type, etc.
[ ] YES [X] NO

B) Increase, decrease, or alter emissions or emission points
[ ] YES [X] NO

(If either answer is YES, new forms E010, E011, E012, E013, or E014 and associated forms must be filed with this application.)

* Form must be completely filled out before it is acceptable.

12. Process Weight, lb/hr, (Item 6 on Form E010), Incineration Rate, lbs/hr, (Item 3C on Form E012), or Fuel Burning Rate, 1000 BTU/hr,(Item 7C on Form E011):

173,520 LB/HR

This is to certify that I am familiar with operations concerning this equipment and the information provided on this application is true and complete to the best of my knowledge:

Mail To:
CHATTANOOGA–HAMILTON COUNTY
AIR POLLUTION CONTROL BUREAU
3511 Rossville Boulevard
Chattanooga, Tennessee 37407

Company Official: [signature]
Signature

Title: Plant Engineer

Date: January 5, 1982

DO NOT WRITE BELOW THIS LINE

#130 Permit Fee

8 Inspection Approval Date Inspected: 1-7-82

[signature] Reviewed by Supervisor

JGW Check Received. Amount 260.00 Check Number 1703450

KJA Entered into tape file and state keypunch form filed

KJA Registered in Suspense File

SPECIAL CONDITIONS IMPOSED:

Expiration Date: 1-11-83

Permit Number: 3321-30400399-31C

Approved By: [signature]
Director

Date: January 15, 1982

MWPS012263

Employee Breathing Zone Dust Concentrations

Dust concentrations have been measured in the breathing zones of employees grinding castings in the grinding/finishing areas. The following table shows concentrations of respirable dust (<2-5 microns dia.) as measured by standard OSHA testing methods for respirable dust.

Date	Location	Job Category	Rotoclone On	Rotoclone Off	Dust Exposure	% Free Silica
1982	#3	Hand Grind	X		1.2	8.7
10/93	#3	Hand Grind		X	0.474 *	3.0
	#3	Blast		X	0.713	4.3
	#1, #3	Foreman		X	0.786	3.4
	#1	Belt #2		X	0.478	4.8
12/93	#3	Inspector		X	0.585	7.0
	#3	Hand Grind		X	4.02 *	10.4
	#1	Hand Grind		X	1.60	4.9
	#3	Inspector		X	0.6	5.7
	#3	Hand Grind		X	2.98	5.4
	#1	Hand Grind		X	2.22	8.2

Breathing zone dust concentrations

Rotoclones on	1.2 mg/m^3
Rotoclones off (all data)	1.45 mg/m^3
(deleting high/low)	1.25 mg/m^3

FORM E001

BASIC APPLICATION FOR EQUIPMENT / AIR POLLUTION PERMIT*

1. Name of Company U. S. PIPE & FOUNDRY COMPANY 2. SIC Code: 3321

3. Company Official to Contact Jim Moore 4. Phone No: 265-4611

5. Mailing Address for Line 3: 2701 Chestnut St., Chattanooga, TN. 37408
Street City State Zip Code

6. Company Address (If different from line 5): _____
Street City Zip Code

7. Application for:

- [ ] Installation Permit
- [ ] Certificate of Operation (Initial Application) Temp. Operating Permit No.: _____
- [ ] Temporary Operating Permit Instal. Permit No.: _____
- [X] Certificate of Operation (Renewal) Certificate of Operation 3321-30400399-31C

8. Type of equipment for which application is made:

- [X] Process Equipment (~~Submit Form E010; [ ] Already Submitted~~)
- [ ] Fuel Burning Equipment (Submit Form E011; [ ] Already Submitted)
- [ ] Incineration Equipment (Submit Form E012; [ ] Already Submitted)
- [ ] Odor or Miscellaneous (Specify) _____ (Submit Form E013; [ ] Already Submitted)
- [ ] Minor Pollution Source—less than 1000 lbs / year and 10 lbs / day total uncontrolled contaminant emissions (Submit Form E014; [ ] Already Submitted)

9. The following forms are filed with this application: _____

10. Equipment Name: Unit No. 4 (Code 34F)

11. If Application is for a Temporary Operating Permit or Certificate of Operation (Initial or Renewal) are there any changes since previous application in the equipment or operational procedures which might:

A) Increase, decrease, or alter process materials, fuel, refuse type, etc.
[ ] YES [X] NO

B) Increase, decrease, or alter emissions or emission points
[ ] YES [X] NO

(If either answer is YES, new forms E010, E011, E012, E013, or E014 and associated forms must be filed with this application.)

* Form must be completely filled out before it is acceptable.

12. Process Weight, lb/hr, (Item 7 on Form E010), Incineration Rate, lbs/hr, (Item 7 on Form E012), or Fuel Burning Rate, 1000 BTU/hr, (Item 5C on Form E011):

173,520 LB/HR

This is to certify that I am familiar with operations concerning this equipment and the information provided on this application is true and complete to the best of my knowledge:

Mail To:
CHATTANOOGA-HAMILTON COUNTY
AIR POLLUTION CONTROL BUREAU
3511 Rossville Boulevard
Chattanooga, Tennessee 37407

Company Official: James Gallwood
Signature

Title: Plant Engineer

Date: November 20, 1979

DO NOT WRITE BELOW THIS LINE

_____ Permit Fee

_____ Inspection Approval Date Inspected: _____

_____ Reviewed by Supervisor

_____ Check Received. Amount _____ Check Number _____

_____ Entered into tape file and state keypunch form filed

_____ Registered in Suspense File

SPECIAL CONDITIONS IMPOSED: _____

Expiration Date: _____ Permit Number: _____

Approved By: _____
Director

Date: _____

MWPS012266

Cleaning Building Exhaust
from Hand Grinding of Castings

Assumptions for calculating air changes:

1. All rooftop or thru wall ventilators operate all the time.
2. No derating factors have been applied to ventilators for build up, building winterizing (sealing), etc.
3. All ventilators exert uniform flow influence throughout the entire contained building volume.
4. All controlled air flows (baghouse exhaust, etc.) have been neglected in calculating air changes.
5. TOSHA breathing zone dust concentrations are representative of the entire building enclosed volume.
6. All building down draft influences, meteorological effects, natural draft and infiltration have been neglected.

Cleaning Sheds #1, 3, 9

Building Volume (cu. ft.)

#1 = 1,036,881
#3 = 564,750
#9 = 185,583
1,787,214 cu. ft. volume

Exhaust Volume (cu. ft./min.)

	No. fan	Model #	CFM	SP	Volume (Total)
#1 =	2	426228	27,850 26,400	0" ⅛"	52,800
#3 =	6	426228	27,850 26,400	0" ⅛"	158,400
#9 =	17	36R524	20,710 18,960	0" ⅛"	322,300
					533,520 CFM

Time required for 1 volume change of buildings 1,3,9:

1,787,214 cu. ft. ÷ 533,520 cu.ft./min. = 3.34 mins.

Air changes per hour:

60 mins./hr. ÷ 3.34 min./change = 17.96 ≈ 18

Building Exhaust Volume (Air) CFM/hr:

1,787,214 cu. ft. x 18/hr. = 32.2 MM cu. ft./hr.

or 32.2 MM cu. ft./hr. x 0.02832 = 911.9 M m^3/hr.

Cleaning Shed #2

Building Volume (cu. ft.)

#2 = 400,000 cu. ft.

Exhaust Volume (cu. ft./min. powered)

Prop. fan F1 & F2	CFM	SP	Volume (Total)
	58,600	0"	
	50,500	¼"	50,500
			x 2
			101,000 cu. ft./min.

Time required for 1 volume change of building #2:

400,000 cu. ft. ÷ 101,000 cu. ft./min. = 3.96 mins.

Air changes per hour:

60 min./hr. ÷ 3.96 min./change = 15.2 changes/hr.

Building Exhaust Volume (Air) CFM/hr:

400,000 cu. ft./change x 15.2 changes/hr. = 6.08 MM cu. ft./hr.

or 6.08 MM cu. ft./hr. x 0.02832 = 172.2 M m^3/hr.

Calculate potential mass of emissions if all breathing zone grinding dust exits the building through roof top ventilators. This also assumes that the larger particles segregated by the cyclone settle out in the building; but also assumes a uniform dust concentration throughout the cleaning sheds.

Cleaning Sheds #1, 3, 9 -

$$911.9 \text{ M } m^3/\text{hr exhaust} \times 1.25 \text{ mg}/m^3 \times \frac{\text{lb.}}{453.6\text{gm}} \times \frac{\text{gm}}{1000\text{mg}} =$$

2.5 lb/hr. dust

Cleaning Shed #2 -

$$172.2 \text{ M } m^3/\text{hr. exhaust} \times 1.25 \text{ mg}/m^3 \times \frac{\text{lb.}}{453.6\text{gm}} \times \frac{\text{gm}}{1000\text{mg}} =$$

0.47 lb./hr. dust

AIR POLLUTION CONTROL BUREAU

3511 ROSSVILLE BLVD. CHATTANOOGA, TN. 37407 PH. (615) 867-4321

DEC 1 1980

Plant Engineering

November 26, 1980

Mr. James L. Smallwood
U. S. Pipe Valve
2701 Chestnut Street
Chattanooga, TN 37401

Dear Mr. Smallwood:

Be advised that Rules 19 and 20 of the Chattanooga Air Pollution Control Ordinance have been deleted and replaced with Rule 26 "Reasonably Available Control Technology" (RACT). It would appear that Rules 26.12 Metal Melting Plants, 26.11 Material Handling Sources, 26.19 Dumping of Material From Control Equipment, and 26.20 Visible Emissions From Buildings may apply to your plant.

Under the former rules, BACT was a mix of emissions and runs of operations calculated on a case-by-case basis. This concept was abandoned with the RACT rule. Each emission point must meet the rule that applies to the source. If any source is subject to more than one of the limitations in this rule, the more stringent limitation shall apply (Rule 26.1(A),4). However, under Section 6 a plant may apply to the Director for a certificate of alternate control and in effect bubble the plant's emissions in one or more emission rates.

A source test will be required by the Director for new installation of control equipment to demonstrate final compliance. A compliance schedule must be submitted before November 30, 1980, to outline your progress. The final compliance date cannot exceed past May 31, 1982. All this was outlined in a letter of September 29, 1980, sent to Jim Moore of your staff.

In response to your November 20, 1980 letter subject "Unit No. 4, Permit No. 3321-30400399-31, it is the Bureau's opinion that visible emissions from a fugitive source as you describe will exceed 5% opacity. And any exhaust points in the plant not connected to the permit unit must meet this opacity. Permit inspections made since 1976 indicate this equipment has not met the 5% opacity limitations.

In regards to your request that the air volume and stack diameters in the emission inventory be deleted, a correction must be made on form E010 of your permit package. Since no form E010 has been received for this permit previously, it is requested that it be submitted along with supporting form E106 before your request can be honored and any determination can be made.

If you have any questions, please feel free to call me.

Sincerely,

Michael E. Poe

Michael E. Poe
Engineer II

MEP/lr

UNITED STATES PIPE AND FOUNDRY COMPANY

Chattanooga Valve & Fittings Plant

P.O. DRAWER 311

CHATTANOOGA, TENNESSEE 37401

November 20, 1980

Mr. Mike Poe
Chattanooga/Hamilton County
Air Pollution Bureau
3511 Rossville Blvd.
Chattanooga, TN 37407

Subject: Unit No. 4, Permit No. 3321-30400399-31C

Dear Mr. Poe:

Please find attached the application for a Certificate of Operation (Renewal) for the above referenced source. This letter also addresses the listing of the No. 4 Unit in your September 29, 1980, letter as not meeting Reasonably Available Control Technology (RACT) requirements.

The RACT requirements referred to are based on grain loadings for each individual source. In order to determine a grain loading, a known exhaust volume must exist. The No. 4 Unit is not exhausted outside the building. There are no existing fans, stacks or other exhaust conduits. It is, therefore impossible to determine an exhaust volume and no grain loading can be calculated.

U. S. Pipe therefore requests that a Certificate of Operation be granted for this Unit and that its continued compliance be based on process weight and visible emission limitations to which it is subject.

U. S. Pipe further requests that the air volume and stack diameters indicated in the emissions inventory be deleted.

Should there be any question, please do not hesitate to contact us.

Very truly yours,

UNITED STATES PIPE AND FOUNDRY COMPANY

James L. Smallwood,
Plant Engineer

JLS:gjp

Attachment

FORM E001

BASIC APPLICATION FOR EQUIPMENT / AIR POLLUTION PERMIT*

1. Name of Company U. S. PIPE & FOUNDRY COMPANY 2. SIC Code: 3321

3. Company Official to Contact Jim Moore 4. Phone No: 265-4611

5. Mailing Address for Line 3: 2701 Chestnut St., Chattanooga, TN. 37408
   Street City State Zip Code

6. Company Address
   (if different from line 5): _____
   Street City Zip Code

7. Application for:

   [ ] Installation Permit
   [ ] Certificate of Operation (Initial Application)
   Temp. Operating Permit No.: _____
   [ ] Temporary Operating Permit
   Instal. Permit No.: _____
   [X] Certificate of Operation (Renewal)
   Certificate of Operation 3321-30400399-31C

8. Type of equipment for which application is made:

   [X] Process Equipment (~~Submit E010 or Form E010A;~~ [ ] ~~Already Submitted~~)

   [ ] Fuel Burning Equipment (Submit Form E011; [ ] Already Submitted)

   [ ] Incineration Equipment (Submit Form E012; [ ] Already Submitted)

   [ ] Odor or Miscellaneous (Specify) _____ (Submit Form E013; [ ] Already Submitted)

   [ ] Minor Pollution Source—less than 1000 lbs / year and 10 lbs / day total uncontrolled contaminant emissions (Submit Form E014; [ ] Already Submitted)

9. The following forms are filed with this application: _____

10. Equipment Name: Unit No. 4 (Code 34F)

11. If Application is for a Temporary Operating Permit or Certificate of Operation (Initial or Renewal) are there any changes since previous application in the equipment or operational procedures which might:

    A) Increase, decrease, or alter process materials, fuel, refuse type, etc.
    [ ] YES [X] NO

    B) Increase, decrease, or alter emissions or emission points
    [ ] YES [X] NO

    (If either answer is YES, new forms E010, E011, E012, E013, or E014 and associated forms must be filed with this application.)

* Form must be completely filled out before it is acceptable.

12. Process Weight, lb/hr, (Item 6 on Form E010), Incineration Rate, lbs./hr, (Item 3C on Form E012), or Fuel Burning Rate, 1000 BTU/hr, (Item 7C on Form E011):

173,520 LB/HR

This is to certify that I am familiar with operations concerning this equipment and the information provided on this application is true and complete to the best of my knowledge:

Mail To:
CHATTANOOGA–HAMILTON COUNTY
AIR POLLUTION CONTROL BUREAU
3511 Rossville Boulevard
Chattanooga, Tennessee 37407

Company Official: _____
Signature

Title: Plant Engineer

Date: November 17, 1980

DO NOT WRITE BELOW THIS LINE

_____ Permit Fee

_____ Inspection Approval Date Inspected: _____

_____ Reviewed by Supervisor

_____ Check Received. Amount _____ Check Number _____

_____ Entered into tape file and state keypunch form filed

_____ Registered in Suspense File

SPECIAL CONDITIONS IMPOSED: _____

Expiration Date: _____

Permit Number: _____

Approved By: _____
Director

Date: _____

MWPS012273

October 5, 1973

Chattanooga Hamilton County
Air Pollution Control Bureau
3511 Rossville Boulevard
Chattanooga, Tennessee 37407

Attention: Mr. Robert Bond

Reference: Operating Permit No. 312300110-C

Gentlemen:

In regard to our telephone conversation on September 20, 1973, a re-survey of the No. 4 Unit (Code 34F) emissions has been made.

The presently reported emission rate of 53 lbs. per hour was based on a study made approximately three years ago.

Changes have recently been made in the mold sand mix and operations which has significantly reduced the amount of smoke and fumes generated in this area.

The airborn emissions from this operation is now estimated to be 25% of the original quantity based on the amount of visible material. This gives a new uncontrolled rate of 13.25 lbs. per hour. An amended Process Equipment Permit Application is attached.

UNITED STATES PIPE AND FOUNDRY COMPANY

Jim Moore,
Project Engineer

JM:gjp

CC: Mr. T. A. Deakins, Plant Manager
Mr. R. Sanders, General Office

Do not write here.
Grid No.

PROCESS EQUIPMENT PERMIT APPLICATION

Name of Company: U. S. PIPE & FOUNDRY COMPANY

Company official to contact: Jim Moore

Mailing address: 2701 Chestnut St., Chattanooga, Tenn. 37408

Phone Number: 265-4611

IMPORTANT: For faster and more efficient processing of permit application give answers to all questions and requirements on attached instruction sheets in as much detail as possible where applicable.

BASIC PROCESS EQUIPMENT

Equipment Name: No. 4 Unit (Code 34F)

Type of Process: Forming Castings By Pouring Molten Iron Into Sand Molds

Raw Material(s) Processed: Sand and Molten Iron

Process Weight: 173,520 LB?HR. LB./HR.

Emission Type(s): Smoke From Molding Sand

Emission Rate (Calculated or Actual Test):

Uncontrolled: 13.25 LB./HR.

Controlled: LB./HR.

Control Equipment on Process: Yes ____ No ____

Type of Control: ____

Note: If control equipment, fill out applicable information on back of page.

Other Pertinent Information: 1. This is an amended application for existing equipment, Operating Permit No. 312300110C, to reflect reduced emissions due to a change in mold sand make up.

This is to certify that the above information is true and complete to the best of my knowledge.

Company Official: [signature]
Title: Plant Engineer
Date: Oct. 5, 1973

Return completed form to:
Chattanooga-Hamilton County Air Pollution Control Bureau
100 E. 11th Street
City Hall Annex, Room 201
Chattanooga, Tennessee 37402

APCB-4
5-71

MWPS012275

PROCESS EQUIPMENT PERMIT APPLICATION

Name of Company: U. S. PIPE & FOUNDRY CO.

Company official to contact: James B. Grant

Mailing address: 2701 Chestnut St., Chattanooga, Tenn. 37408

Phone Number: 265-4611

IMPORTANT: For faster and more efficient processing of permit application give answers to all questions and requirements on attached instruction sheets in as much detail as possible where applicable.

BASIC PROCESS EQUIPMENT

Equipment Name: No. 4 Unit (Code 34F)

Type of Process: Forming castings by pouring molten iron into sand molds

Raw Material(s) Processed: Sand and molten iron

Process Weight: 173,520 lbs./hr. LB./HR.

Emission Type(s): Smoke from molding sand

Emission Rate (Calculated or Actual Test):

Uncontrolled: 53 lbs./hr. LB./HR.

Controlled: LB./HR.

Control Equipment on Process: Yes ____ No X

Type of Control: ____

Note: If control equipment, fill out applicable information on back of page.

Other Pertinent Information: 1. This application is for a Certificate of Operation for existing equipment.

2. An enclosure and collection unit for this system are now being planned. We will submit this data at a later date.

This is to certify that the above information is true and complete to the best of my knowledge.

Company Official: ____

Title: Plant Engineer

Date: ____

Return completed form to:
Chattanooga-Hamilton County Air Pollution Control Bureau
100 E. 11th Street
City Hall Annex, Room 201
Chattanooga, Tennessee 37402

APCB-4
5-71

ORIGINAL application.

MWPS012276

No. 4 Unit

A. Location Code

34F, U. S. Pipe & Foundry Drawing No. A-1861-CH.

B. Description of Process

The No. 4 Unit is a semi-automatic molding complex used to form large castings. The primary source emissions is at the shakeout station.

The mold is made of sand containing a mixture of sand, Western and Southern Bentonite, Sea Coal, and wood flour. When the iron is poured into the mold, most of the emissions are contained by the sand. After the casting has solidified, the mold is taken to the shakeout area where the casting is removed from the mold and the molding sand broken up and returned to the sand system. It is during this shakeout process that the emissions are released. At present the emissions are released to the normal ventilation of the room which consists of open doors, windows, and ceiling vents.

C. Operating Schedule

Optimum Rate - 16 hours/day, 5 days/week, 50 weeks/year.

D. Flow Diagram

U. S. Pipe & Foundry Drawing No. 250A-22456 (A-1639-CH).

E. Drawings of Equipment

U. S. Pipe & Foundry Drawing No.'s 250A-22456 (A-1639-CH), 250A-22455 (A-1638-CH), 250A-22445 (A-1629-CH).

Chattanooga – Hamilton County Air Pollution Control Bureau

3511 Rossville Boulevard • Chattanooga, Tennessee 37407
(615) 867-4321 Telefax (615) 867-4348

April 14, 1992

Mr. Dennis Urbaniak
U. S. Pipe & Foundry
Valve Division
2701 Chestnut Street
Chattanooga, Tennessee 37401

Dear Mr. Urbaniak:

As we discussed during the annual inspection of U. S. Pipe and Foundry on March 16 and 17, 1992, it is necessary to identify the potential volatile organic compound (VOC) emissions from each of the air set and "pep" set core making operations at U. S. Pipe's Chattanooga facility. Verification of the VOC emissions from these operations will allow the identification of those constituent compounds which are listed as Title III Hazardous Air Pollutants (HAP). You have already provided me with the Material Safety Data sheets for each of the binders used in these core making operations.

In order to complete this evaluation, I need the sand processing weights and binder mixing ratios (weight percent) for each core making operation that was observed during the inspection. This information should also include the processing weights of the large mold making operations which use chemical binders. The sand processing rate should be represented as a maximum hourly rate and from this, a total binder usage rate can be derived. Please include the number of annual operating hours for each source. I would need the installation dates for each of the air and "pep" set core making processes. Those core making operations not presently permitted as part of an existing line will require air pollution permits.

I would appreciate your prompt attention to this matter in order to have these emissions estimates included in the U. S. Pipe and Foundry emission inventory by June 30, 1992. If you have any additional questions or comments please contact me.

500
750

Sincerely,

W. C. Markham, Jr.

W. C. Markham, Jr.
Engineer

Airset binder 1.5% of sand (by weight)
acid ~50% of binder

WCM/fg

10

Pep Set

100% Recycled Paper

MWPS012278

FORM E001

BASIC APPLICATION FOR EQUIPMENT / AIR POLLUTION PERMIT OR CERTIFICATE OF OPERATION *

1. Name of Company U. S. PIPE & FOUNDRY COMPANY 2. SIC Code: _____

3. Company Official to Contact JIM MOORE 4. Phone No: 265-4611, Ext.414

5. Mailing Address for Line 3: 2701 Chestnut St., Chattanooga, TN 37408
Street City State Zip Code

6. Company Address
(if different from line 5): _____
Street City Zip Code

7. Application for:

- [ ] Installation Permit
- [x] Certificate of Operation (Initial Application)
  Temp. Operating Permit No. _____
- [ ] Temporary Operating Permit
  Instal. Permit No. _____
- [ ] Certificate of Operation (Renewal)
  Certificate of Operation No. _____

8. Type of equipment for which application is made:

- [x] Process Equipment (Submit E010 or Form E010A; [ ] Already Submitted)
- [ ] Fuel Burning Equipment (Submit Form E011; [ ] Already Submitted)
- [ ] Incineration Equipment (Submit Form E012; [ ] Already Submitted)
- [ ] Odor or Miscellaneous (Specify) _____ (Submit Form E013; [ ] Already Submitted)
- [ ] Minor Pollution Source—less than 1000 lbs / year and 10 lbs / day total uncontrolled contaminant emissions (Submit Form E014; [ ] Already Submitted)

9. The following forms are filed with this application: E010, E106

10. Equipment Name: UNIT #10

11. If Application is for a Temporary Operating Permit or Certificate of Operation (Initial or Renewal) are there any changes since previous application in the equipment or operational procedures which might:

A) Increase, decrease, or alter process materials, fuel, refuse type, etc.
[ ] YES [ ] NO

B) Increase, decrease, or alter emissions or emission points
[ ] YES [ ] NO

(If either answer is YES, new forms E010, E011, E012, E013, or E014 and associated forms must be filed with this application.)

* Form must be completely filled out before it is acceptable.

12. Process Weight, lb/hr, (Item 6 on Form E010), Incineration Rate, lbs/hr, (Item 3C on Form E012), or Fuel Burning Rate, 1000 BTU/hr,(Item 7C on Form E011):

21,050 LB/HR

This is to certify that I am familiar with operations concerning this equipment and the information provided on this application is true and complete to the best of my knowledge:

Mail To:
CHATTANOOGA–HAMILTON COUNTY
AIR POLLUTION CONTROL BUREAU
3511 Rossville Boulevard
Chattanooga, Tennessee 37407

Company Official: _____
Signature

Title: Plant Engineer

Date: January 16, 1986

DO NOT WRITE BELOW THIS LINE

_____ Permit Fee

_____ Inspection Approval Date Inspected: _____

_____ Reviewed by Supervisor

_____ Check Received. Amount _____ Check Number _____ Date _____

_____ Updated on Computer

_____ Registered in Suspense File

SPECIAL CONDITIONS IMPOSED: _____

Expiration Date: _____ Certificate of Operation No. _____

Approved By: _____
Director

Date: _____

MWPS012280

POLLUTION ESTIMATION FORM

FORM: E106

1. Name of Company (as shown on Line 1, Form E001): U. S. PIPE AND FOUNDRY COMPANY

2. Equipment Name (as shown on Line 10, Form E001): #10 UNIT

3. Type of pollutant for which estimation is made: Particulate

4. Pollutant Emission Factor (PEF): 5 LB/TON
(Give value & units in lbs/ton, lbs/lbs, lbs/gal, gr/ft^3, etc.)

Source of Emission Factor: AP 42

5. Uncontrolled Pollution Emission Rate:

5 LB/TON (PEF from Item 4) x 1.0625 TONS/HR (Give operating rate for this equipment and the appropriate units in either lbs/hr, tons/hr, gal/hr or CFM) = 5.3125 LB/HR (Give value & units)

6. Uncontrolled Pollution Emission Rate: 5.3125 (from Item 5 convert to lbs/hr) lbs emitted/hr

This is to certify that I am familiar with the operations concerning this equipment and that the information provided on this application is true and complete to the best of my knowledge. This form must be completely filled out before acceptable.

Mail To:
CHATTANOOGA-HAMILTON COUNTY
AIR POLLUTION CONTROL BUREAU
3511 Rossville Boulevard
Chattanooga, Tennessee 37407

Company Official: [signature]
Signature

Title: Plant Engineer

Date: January 16, 1986

DO NOT WRITE BELOW THIS LINE

_____ Engineer Approval

This form corresponds to permit number: _____

Special Notations: _____

MWPS012281

FORM: E010

PROCESS EQUIPMENT APPLICATION

1. Name of Company (as shown on Line 1, Form E001): U. S. PIPE & FOUNDRY COMPANY

2. Equipment Name (as shown on Line 10, Form E001): #10 UNIT

3. Type of Process: MOLD MAKING, IRON POURING

4. Major Raw Materials Processed: MOLTEN IRON, SAND

5. Date of installation, initial start-up, or alternation (such that potential emissions were increased) of equipment or device for which permit is applied for:

   - [ ] Before January 1, 1973 - Schedule 1
   - [X] After January 1, 1973 - Schedule 2

6. Process Weight: 21,050 lbs/hr

   (This is the total weight of all materials introduced into the process expressed in lbs/hr.)

7. Control Equipment Data:

   A. [X] Emissions Uncontrolled

   B. [ ] Baghouse (File Form E102)

   C. [ ] Wet Collecting Device (File Form E103)

   D. [ ] Electrostatic Precipitator (File Form E104)

   E. [ ] Inertial Separators (File Form E105)

   F. [ ] Other - Specify _____

8. Control Equipment Efficiency for each pollutant emitted by this equipment (from appropriate Form E102, E103, E104, E105, E107 or enter zeros if A is checked in Item 7):

	% EFFICIENCY
Particulates	0
SO_x	-
NO_x	-
CO	-
Hydrocarbons	-
Other:	

9. Actual Particulate Emissions:

A. Uncontrolled Emissions: 5.3125 lbs/hr (File Form E106)

B. Actual Emissions: _____ lbs/hr (Submit stack test report)

OR

Estimated Emissions:

$\left(\frac{100\% - \text{Control Efficiency } (\%)}{100\%}\right)$ x Uncontrolled Emissions = _____ lbs/hr

10. Actual Sulfur Oxide Emissions:

N/A

Specify air required for process: _____ SCFM

A. Uncontrolled Emissions: _____ lbs/hr (File Form E106)

B. Actual Emissions: _____ lbs/hr (Submit stack test report)

OR

Estimated Emissions:

$\left(\frac{100\% - \text{Control Efficiency } (\%)}{100\%}\right)$ x Uncontrolled Emissions = _____ lbs/hr

11. Allowable Nitrogen Oxide Emissions:

N/A

A. Nitric Acid Plants Emission Limitation (Allowable emissions will be in Item 7 on Form E101): _____ lbs/hr as NO_2

B. All other process equipment emission limitations: ☐ No Requirement

12. Nitrogen Oxide Emissions (lbs/hr as NO_2):

N/A

A. Uncontrolled Emissions: _____ lbs/hr (File Form E106)

B. Actual Emissions: _____ lbs/hr (Submit stack test report)

OR

Estimated Emissions:

$\left(\frac{100\% - \text{Control Efficiency } (\%)}{100\%}\right)$ x Uncontrolled Emissions = _____ lbs/hr

13. Other Air Contaminant Emissions - Specify:

N/A

AIR CONTAMINANT	AMOUNT EMITTED (lbs/hr)

☐ The values shown were determined by actual stack test. (Submit a copy of stack test with full details).

☐ The values shown were estimated. (File Form E106 for each pollutant shown).

14. Those emissions indicated in Item 13 may at times under normal operating conditions cause (check one or more):

- [ ] Odors
- [ ] Eye Irritations
- [ ] Property Damage
- [ ] Other nuisances outside of plant property
- [ ] Health Effects
- [x] No environmental damage

15. Emission Point Data:

N/A

Stack Height (emission point) above ground:	_____	ft
Ground Elevation above sea level at stack base:	_____	ft
Stack Diameter:	_____	ft
Volume of gas discharged into atmosphere:	_____	cfm
Gas exit temperature:	_____	°F

16. Average Equipment Operating Time:

A.	Daily	8	hours
B.	Weekly	5	days
C.	Yearly	48	weeks

This is to certify that I am familiar with the operations concerning this equipment and that the information provided on this application is true and complete to the best of my knowledge. This form must be completely filled out before acceptable.

Mail To:
CHATTANOOGA-HAMILTON COUNTY
AIR POLLUTION CONTROL BUREAU
3511 Rossville Boulevard
Chattanooga, Tennessee 37407

Company Official: _____
Signature

Title: Plant Engineer

Date: January 16, 1986

NOTE: Equipment must also meet Visible Emission Code.

DO NOT WRITE BELOW THIS LINE

_____ Information approved and entered on Permit Inspection Form (Engineer)

_____ lbs/hr (allowable particulate emissions) _____ PPM by volume as SO_2

UTM Coordinates of Company: EW _____ NS _____

This form corresponds to permit number: _____

Special Notations: _____

MWPS012284

AIR POLLUTION CONTROL BUREAU

3511 ROSSVILLE BLVD. CHATTANOOGA, TN. 37407 PH. (615) 867-4321

March 7, 1980

Mr. Jim Moore
U. S. Pipe & Foundry Company
P. O. Box 6129
Chattanooga, TN 37403

Dear Mr. Moore:

Please find enclosed the fugitive emission inventory for your company. This inventory was prepared by using sampling techniques devised by the Midwest Research Institute and information provided by you. I have enclosed a copy of the formulas used to determine your emissions along with the results of our analyses of the samples we took at your plant.

Even though the method of calculation of fugitive emissions is an approximation, the MRI method has been proven to be a reliable estimation when the data is accurate. It is important, therefore, that you review the information we used in calculating your emissions and contact us immediately if you find any major problems. If you do not contact us before April 1, 1980, we will assume that you are in agreement with the Inventory.

Thank you for your cooperation.

Very truly yours,

Michael E. Poe
SIP Project Leader

MEP/lr

Enclosures

SAMPLE NUMBER	SAMPLE WEIGHT	DRY WEIGHT	PERCENT MOISTURE	SAMPLE WEIGHT AFTER SIEVING	PERCENT SILT
U.S. Pipe #1	37.60 47.17 19.57	47.06	0.56 %	43.59	17.13 %
U.S. Pipe #2	37.16 44.46 17.30	41.61	16.47 %	40.95	3.82 %
US Pipe #3	37.29 46.57 13.28	39.01	11.75 %	38.31	5.27 %
U.S. Pipe #4	33.36 43.79 15.43	42.39	9.07 %	41.35	6.74 %
US Pipe #5	38.10 48.17 20.07	46.77	6.98 %	45.28	7.42 %
US Pipe #6	38.33 46.74 18.51	45.23	8.16 %	43.58	8.91 %
unpaved road U.S. Pipe #7	37.4 41.07 13.92	40.76	6.36 %	39.38	4.35 %

MWPS012286

From: Eric R. Flowers

To: Chattanooga - Hamilton County Air Pollution Control Bureau

Subject: Climatic parameters for Chattanooga

On October 3, 1979 I called the National Climatic Center in Asheville, North Carolina (FTS No. 8-672-0683) to ascertain some data on wind conditions for Chattanooga. The following information may be useful technical data for the Bureau in air pollution work.

1. Average annual wind speed - 5.4 mph

2. Percentage of time wind speed exceeds 10 knots (11.5 mph) - 10.8%

This data was based on the average for the years between 1965 to 1974.

On October 4, 1979 I called the Chattanooga Airport (892-6302) for information on the number of days annually that precipitation was at or above .01 inch. The following information was supplied:

Year	No days with precip. at .01 inch or higher
1977	124
1976	112
1975	130
1974	137
1973	125
1972	147
1971	132
1970	123
1969	117
1968	109

Over the 10 year period between 1968 and 1977 the average was 125.6 days. Between 1951 - 1970 the number of days with such a precipitation was 117 days. Since 1941 the number of days was 121. Using the 1941 record the number of dry days would be 244 days for Chattanooga.

The above data correspond to storage pile and traffic road dust fugitive dust equations and are summarized as follows:

U mean wind speed = 5.4 mph
f percentage of time wind exceeds 12 mph = 10.8%
d no. of dry days per year = 244

Paved and unpaved road dust equations compiled by Midwest Research Institute - 1979.

Vehicular Traffic On Paved Roads

$$EF = .09\ I\left(\frac{4}{n}\right)\ \left(\frac{s}{10}\right)\ \left(\frac{L}{1000}\right)\ \left(\frac{W}{3}\right)^{.7}\ \frac{lb}{\text{Vehicle-mile}}$$

Vehicular Traffic On Unpaved Roads

$$EF = 5.9\ \left(\frac{s}{12}\right)\ \left(\frac{S}{30}\right)\ \left(\frac{W}{3}\right)^{.7}\ \left(\frac{w}{4}\right)^{.5}\ \left(\frac{d}{365}\right)\ \frac{lb}{\text{Vehicle-mile}}$$

Parameter Legend

I. I = Industrial road augmentation factor for paved roads

Case 1 I = 7.0 no curb with shoulders with travel on shoulders
Case 2 I = 3.5 no curb with shoulders without travel on shoulders
Case 3 I = 1.0 curb

2. n = number of traffic lanes
3. s = silt content of road dust (%)
4. L = road dust loading on traveled portion of road (lbs of dust per mile of road)
5. W = average vehicle wt. (tons), typically average of loaded and unloaded weight
6. S = average vehicle speed (mph)
7. w = average number of wheels per vehicle
8. d = number of dry days per year where rainfall is less than .01 inch precipitation

Storage Pile Emission Factors

Compiled By Midwest Research Institute

x 1977 Test report data
xx 1979 Test report data

x 1. Batch Load-In
(e.g. front-end loader, railcar dump, truck)

EF = lbs of particulate per ton of material loaded out

$$\frac{.0018\ (\frac{s}{5})\ (\frac{U}{5})}{(\frac{M}{2})\ 2\ (\frac{Y}{6})}\ \frac{lb}{ton}$$

x 2. Batch Load-Out

lbs per ton of material loaded out =

$$\frac{.0018\ (\frac{s}{5})\ (\frac{U}{5})}{(\frac{M}{2})\ 2\ (\frac{Y}{6})}\ \frac{lb}{ton}$$

xx3. Continuous Load-In
(e.g. storage pile formation by conveyor stacker, transfer station)

lbs per ton of material loaded in =

$$\frac{.0018\ (\frac{s}{5})\ (\frac{U}{5})\ (\frac{H}{10})}{(\frac{M}{2})^2}\ \frac{lb}{ton}$$

x 4. Active Storage Pile Maintenance and traffic

lbs per ton material put through storage = $.10K\ (\frac{s}{1.5})\ (\frac{d}{235})\ \frac{lb}{ton}$

x 5. Active Storage Pile Wind Erosion

lbs per ton material put through storage

$$= .05\ (\frac{s}{1.5})\ (\frac{d}{235})\ (\frac{f}{15})\ (\frac{D}{90})\ \frac{lb}{ton}$$

Parameter Legend

s = per cent silt (%)
U = avg. wind speed (mph)
M = material unbound moisture content (%)
f = per cent time wind speed exceeds 12 mph
Y = dumping device capacity (yd^3)
H = drop height (ft)
K = activity correction factor; 1.0 for sand & gravel conditions
d = no. dry days per yr. less than .01 inch of precp.

MWPS012289

U. S. Pipe

UTM - 653320 3877380

1-6 Dump
5.5 #/hr 48,841 #/y

7 Haul road
19 #/hr 32,745 #/y 50% WATER truck control
9.5 #/HR

U.S. PIPE (Value)

AMOUNT OF SAND

34,400 TON/YR USED

SAMPLE LOCATION

#1 AIR SET residue (100x50)

2 recycle operation (75' conveyor - 2 shovels per min. @ 2½ cubic ft.

3
4
5
6
} Large Dump misc. Samples

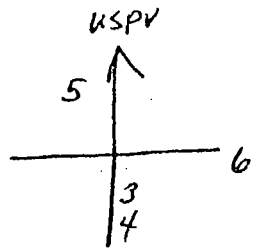

haulroad to Dump

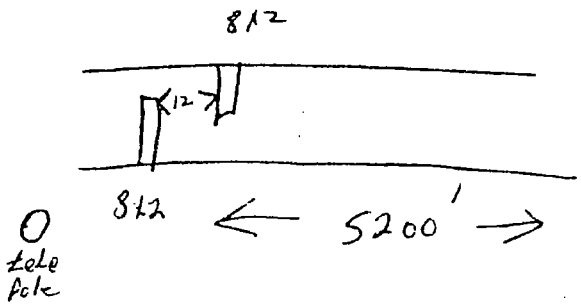

Company

Vehicular Traffic Survey for Road Dust Study

Data to be completed by plant personnel
1. If road is paved delete avg. speed
2. If road is unpaved complete all columns

Type of Vehicle check appropriate blocks below	Avg. wt. of vehicle (usually wt. avg. loaded & unloaded) (tons)	No. trips per day	No. trips per mo.	No. trips per yr.	Avg. dist. traveled per trip along rd. (miles)	A s (
Cars						
Vans						
ckup trucks						
ıl trucks:						
6 wheel	10	10	43	516	½	
10 wheel						
18 wheel						
Others						
dicate no. wheels each-						

Indicate control if any:

1) Wetting down road _____ How often _____

2) Sweeping road _____ How often _____

3) Chemical suppressant _____ Type _____
How often _____

How often

MWPS012292

RECEIVED
JUN 17 1986
Plant Eng.

FORM E001

BASIC APPLICATION FOR EQUIPMENT / AIR POLLUTION PERMIT OR CERTIFICATE OF OPERATION *

1. Name of Company U. S. PIPE AND FOUNDRY COMPANY 2. SIC Code: 3321

3. Company Official to Contact JIM MOORE 4. Phone No: 265-4611

5. Mailing Address for Line 3: 2701 Chestnut Street (Street) CHATTANOOGA, (City) TN (State) 37408 (Zip Code)

6. Company Address (if different from line 5): _____ Street _____ City _____ Zip Code

7. Application for:

- [ ] Installation Permit
- [X] Certificate of Operation (Initial Application) Temp. Operating Permit No. 3321-30400350-44T
- [ ] Temporary Operating Permit Instal. Permit No. _____
- [ ] Certificate of Operation (Renewal) Certificate of Operation No. _____

8. Type of equipment for which application is made:

- [X] Process Equipment (Submit E010 or Form E010A; [X] Already Submitted)
- [ ] Fuel Burning Equipment (Submit Form E011; [ ] Already Submitted)
- [ ] Incineration Equipment (Submit Form E012; [ ] Already Submitted)
- [ ] Odor or Miscellaneous (Specify) _____ (Submit Form E013; [ ] Already Submitted)
- [ ] Minor Pollution Source—less than 1000 lbs / year and 10 lbs / day total uncontrolled contaminant emissions (Submit Form E014; [ ] Already Submitted)

9. The following forms are filed with this application: _____

10. Equipment Name: Molding Sand Reclamation Equipment

11. If Application is for a Temporary Operating Permit or Certificate of Operation (Initial or Renewal) are there any changes since previous application in the equipment or operational procedures which might:

A) Increase, decrease, or alter process materials, fuel, refuse type, etc.
[ ] YES [X] NO

B) Increase, decrease, or alter emissions or emission points
[ ] YES [X] NO

(If either answer is YES, new forms E010, E011, E012, E013, or E014 and associated forms must be filed with this application.)

* Form must be completely filled out before it is acceptable.

12. Process Weight, lb/hr, (Item 6 on Form E010), Incineration Rate, lbs/hr, (Item 3C on Form E012), or Fuel Burning Rate, 1000 BTU/hr, (Item 7C on Form E011):

30,000 LB/HR

This is to certify that I am familiar with operations concerning this equipment and the information provided on this application is true and complete to the best of my knowledge:

Mail To:
CHATTANOOGA–HAMILTON COUNTY
AIR POLLUTION CONTROL BUREAU
3511 Rossville Boulevard
Chattanooga, Tennessee 37407

Company Official: J. Hallwood
Signature

Title: Plant Engineer

Date: February 27, 1986

DO NOT WRITE BELOW THIS LINE

$150.00 Permit Fee

WHR Inspection Approval Date Inspected: May 22, 1986

RH Reviewed by Supervisor 5·28·86

JAW Check Received. Amount 240.00 Check Number 1711343 Date 6/16/86

JAW Updated on Computer

Registered in Suspense File

SPECIAL CONDITIONS IMPOSED: See Attached Special Conditions

Expiration Date: May 28, 1987 Certificate of Operation No. 3321-30400350-44C

Approved By: N. Wayne Cropp
Director

Date: MAY 30 1986

MWPS012294

Chattanooga–Hamilton County Air Pollution Control Bureau

U.S. Pipe - Fittings Plant
Special Conditions for
Certificate of Operation No. 3321-30400350-44C

1. The maximum allowable particulate emission rate for this source is 1.1 lbs/hr. This represents the total allowable for both baghouses under this permit.

2. This emission limitation is Best Available Control Technology as determined by the Director, the Chattanooga-Hamilton County Air Pollution Control Bureau.

CHATTANOOGA VALVE & FITTINGS PLANT

October 7, 1992

MEMORANDUM FOR RECORD

On Tuesday, September 29, 1992, the Tennessee Department of Environment and Conservation (TDEC), Division of Solid Waste Management (DSWM) conducted the annual RCRA compliance inspection. Because of a shortage of personnel, TDEC requested help from EPA, Region IV. The compliance inspection was conducted by Kristin Lippert, Environmental Engineer, RCRA Waste Compliance, EPA Region IV and Lynne Koby, TDEC.

U. S. Pipe is listed on the EPA listing of RCRA sites because of the "mixing bins" that have not been closed. It is my understanding that after these sites are closed we will be dropped from the list that requires an annual inspection.

K. Lippert took the lead in the inspection. We had a lengthy discussion concerning the Consent Agreement and Final Order (CAFO) and the way we handle cupola baghouse dust. Lippert stated as far as the EPA was concerned the dust treating was a non-issue, since they recognized the totally enclosed system for the cupola. Her concern was the mixing bin we had used for hazardous waste that had not been closed that is in an "interim status". She even questioned if we performed weekly inspections on this site. She looked at the manifest where we had shipped waste off site. They inspected both the Fittings and Soil Pipe sites.

Neither person had done any document research prior to coming to the plant or was very familiar with the status of the CAFO that had been executed in December of 1990.

At the conclusion, Lippert wanted to see our training records (attendance and lesson plan) with respect to Hazardous Waste Training. Again, her concern was the Hazardous Waste mixing bins that had not been closed. The records we have are for the TDEC hazardous treating system (bag-house Dwg. #). A copy of the outline of the Solifix Treatment System Plan and two names of personnel that attended the training were sent by FAX to Lippert on October 5, 1992.

Plant Engineer

JLW:tr

cc: W. Berry
J. Watson

Copies to: (FYI)✓
W.E. Fleck
J.R. Walker
D.C. Wallace

Note: See attch.

CHATTANOOGA VALVE & FITTINGS PLANT

October 7, 1992

MEMORANDUM FOR RECORD

On Tuesday September ~~30~~ 29?, 1992, I initiated a call to Guy Moose, Tennessee Department of Environment and Conservation (TDEC) Division of Solid Waste Management (DSWM).

Two items were discussed: 1) the paint spill and 2) the annual RCRA compliance inspection.

Item 1 - Dennis Urbaniak had notified the UST group about the paint underground and they declined to take action but notified DSWM. On September 29, 1992 when the RCRA inspection was being conducted, Lynne Koby (DSWM) wanted to take a look at the site. When I talked to Moose the next day, he said they would take no action because their interpretation of the paint solvent issue (TCA) was that if it was used to make the paint fluid, it was exempt from the normal handling of hazardous waste. This is consistent with their comments on previous visits to the plant.

Item 2 - Guy Moose stated to me that the mixing bins closure was not a DSWM issue. Their concern was the baghouse dust treatment system. The EPA representative had stated their concern was the mixing bin. Also in the discussion with Moose he indicated surprise when I mentioned the status of the closure conversation between Bowers TDEC and Watson U. S. Pipe. It appears to me that the local office looks on the mixing bins as a non-issue.

cc: W. Berry
J. Watson

Plant Engineer

MWPS012298

RESOURCE CONSULTANTS
environmental engineers and scientists

February 6, 1986

Mr. Jim Moore
U.S. Pipe and Foundry
Valve and Fittings Plant
P.O. Box 311
Chattanooga, TN 37401

Dear Jim:

The enclosed report contains the results of the particulate emission source testing program conducted on the Air Set Sand Reclamation System at the Valve and Fittings Plant on January 30, 1986. The following is a summary of the results from the Amerex RP-10-225 Baghouse:

Run No.	Volumetric Flow Rate (acfm)	Particulate Mass Rate (lb/hr)	Particulate Concentration (gr/dscf)
1	23,100	0.508	0.00260
2	23,100	0.317	0.00164
3	22,500	0.241	0.00127
Average	23,000	0.36	0.0019

Adding the particulate mass rate estimation of 0.013 pounds per hour for the Classifier Baghouse to the average particulate mass rate of 0.36 pounds per hour for the Amerex Baghouse indicates that the particulate mass rate for the Air Set Sand Reclamation System was 0.37 pounds per hour.

We appreciate the cooperation and assistance provided to us during the course of our work at your plant. Should you require additional information or if we can be of further assistance, please do not hesitate to contact us.

Sincerely,

RESOURCE CONSULTANTS, INC.

Billy R. Nichols, P.E.
Principal

J. Roger Reehl
Pollution Control Specialist

BRN:JRR/jd

Enclosure

The Westwood Building • 110 Westwood Place • P.O. Box 1848 • Brentwood, Tennessee 37027 • 615-373-5040
a tennessee corporation

AIR POLLUTION CONTROL BUREAU

3511 ROSSVILLE BLVD. CHATTANOOGA, TN. 37407 PH. (615) 867-4321

RECEIVED
NOV 22 1985

ENVIRONMENTAL SERVICE
NOV 25 1985

MDU	
JEM	

November 19, 1985

Mr. Jim Smallwood
U. S. Pipe and Foundry Company
2701 Chestnut Street
Chattanooga, TN 37408

Re: Temporary Operating Permit 3321-30400350-44T

Dear Mr. Smallwood:

In the future you will be receiving the temporary operating permit for the Molding Sand Reclamation Equipment. Please notice the special conditions attached to this permit which are the same as were attached to the installation permit for this equipment.

These conditions require that the unit be stack tested within 180 days of issuance of the temporary operating permit. The methods required will be EPA method 1-5 and 9 contained in 40 CFR, Part 60, Appendex A. Therefore, the stack test report will be due in this office by May 27, 1986. A pre-test agreement must be negotiated prior to testing and the bureau should be notified at least ten days prior to testing.

The Bureau intends to conduct the Method 9 (visible emission) portion of the test, however, if U. S. Pipe elects to conduct its own readings as well this will be acceptable to the Bureau.

Sincerely,

W. Harvey Rice

W. Harvey Rice
Engineer

WHR/jaw

J. Pleasant

UNITED STATES PIPE AND FOUNDRY COMPANY

November 5, 1984

TO: Mr. Jim Moore **ADDRESS:** Chattanooga Valve & Fittings

FROM: J. L. Murphree **ADDRESS:** General Office

SUBJECT: PROJECT 017047 - SAND RECLAMATION - CHATTANOOGA VALVE & FITTINGS - AFE 3876

COPIES TO: Messrs. W. E. Fleck
W. A. Berry
J. Smallwood
J. R. Walker
D. C. Wallace - J. Pleasant

Enclosed are three copies of Drawing #250-A-43959. This drawing is a schematic of the dust collection system for the sand reclamation equipment. Mr. Harvey Rice of the Chattanooga Environmental Protection Agency office has requested prints of this schematic. Please forward Mr. Rice a copy of this drawing.

J. L. Murphree

JLM/sd

enc.

UNITED STATES PIPE AND FOUNDRY COMPANY

October 5, 1984

TO: Mr. J. Moore ADDRESS: Chattanooga Valve & Fittings

FROM: J. L. Murphree ADDRESS: General Office

SUBJECT: PROJECT 017047 - SAND RECLAMATION - CV&F - AFE 3876

COPIES TO: Messrs. W. E. Fleck
J. L. Smallwood
W. A. Berry
C. N. Codding
J. R. Walker
D. C. Wallace - J. F. Pleasant

The information you requested relative to the dust collection system for the sand reclamation equipment is as follows:

ITEM	LARGE FAN	SMALL FAN
Discharge stack size	42" dia.	8" dia.
Static pressure	12.5 in. W.C.	8" W.C.
Brake horsepower	57.5	3
Horsepower	75	5
Inlet area	7.42 sq. ft.	0.349 sq. ft.
Outlet area	6.37 sq. ft.	0.349 sq. ft.
Blade type	Backward incline	Radial

If you need any additional information, please advise me.

J. L. Murphree

J. L. Murphree

JLM/mk

UNITED STATES PIPE AND FOUNDRY COMPANY

August 3, 1984

TO: Mr. J. F. Pleasant ADDRESS: General Office

FROM: J. L. Murphree ADDRESS: General Office

SUBJECT: PROJECT 017047 - SAND RECLAMATION - CV&F - AFE 3876

COPIES TO: Messrs. W. E. Fleck
W. A. Berry
J. L. Smallwood
C. N. Codding
J. R. Walker
D. C. Wallace

Vulcan Engineering Company received an order for sand reclamation equipment for the Chattanooga Valve & Fittings Plant. Part of their order is a dust control system including baghouses and duct work. Enclosed is data which Vulcan has forwarded. As soon as I receive their duct design drawings, I will forward you a set.

If you have any questions, please contact me.

J. L. Murphree

J. L. Murphree

JLM/mk

Enclosure

Environmental Subject
AUG 3 1984

II. DUST COLLECTION

The dust collection system proposed herein has been based on collecting emission from the 20 TPH No-Bake Sand Reclamation Process. The following describes the pick-up points and air volumes for this system.

G.K. 48" V-Trough Load Point	5000 CFM
C.E. 20 TPH Cannon Ball	10000 CFM
C.E. Cannon Ball Discharge	1500 CFM
Elevator Top	750 CFM
Elevator Bottom	750 CFM
C.E. Sand Cooler	1500 CFM
TOTAL:	19500 CFM

The above will be collected into a single dust filter. The following will be collected into a separate dust filter.

Classifier	1500 CFM

II. DUST COLLECTION

A. DUCTWORK AND HOODS

One lot of 14 ga. carbon steel ducts designed to accommodate the pick-up points required. All ducts were sized for approximately 4000 FPM air velocity for the prevention of dust fallout while conserving static losses throughout the system.

The ductwork will connect the Vibra Mill hood, bucket elevator top and bottom, and two return sand transfer points to the dust filter inlet, from the dust filter outlet to the exhaust fan inlet and from the exhaust fan outlet to atmosphere. Ductwork will also connect the classifier take-off with it's dust filter inlet. The ductwork will be of all welded construction with flanged connections, properly supported with adequate clean out openings approximately every 20'-0 in horizontal runs.

The elbows to have a centerline radius of two times the pipe diameter where practical. All dust collection pick-up points to have half blast gates to insure proper system balance of air flow.

One (1) hood designed to capture emissions given when the V-Trough Conveyor is loaded. The hood will be of the canopy type and of all 10 ga. welded steel construction.

One (1) Cannon Ball hooding enclosure designed to properly control emission from this area. It will be constructed of 14 ga. welded carbon steel and will be equipped with an access door for access to the interior of the cannon ball.

The Bucket Elevator will be equipped with low velocity plenums to reduce inlet pressure losses and capture dust generated in the Bucket Elevator.

All hoods and ductwork to have one shop coat of zinc chromate primer and one final enamel coat.

Note: No hood has been provided at the Cannon Ball discharge. The take-offs furnished with this equipment will be used.

II. DUST COLLECTION

B. DUST FILTER EQUIPMENT

One (1) Amerex, or equal, Pulse Jet Baghouse Model No. RP-10-225 with 225, 4-1/4" x 10'-0 long, 16 oz. polyester felt bags for a total of 2700 sq. ft. of filtering media. The unit will be constructed of 12 ga. mild steel of all welded construction, complete with housing, pyramid type hopper, support structures to provide 5'-0 underneath the hopper discharge, handrailing, access ladder, air manifold with pressure gauge, magnehelic gauge, and prewired solid state control panel to provide both pulse duration and pulse interval adjustment.

This unit will operate at 19500 CFM for an air to cloth ratio of 7.22:1, and will require approximately 20.2 SCFM of clean, dry compressed air at 90-110 PSIG for bag cleaning purposes.

This unit will be furnished with a dust tight enclosure underneath the baghouse discharge for enclosing a one cu. yd. Aurora Hopper (by others) to contain dust generated by the discharge of the collected material.

One (1) Amerex, or equal, Pulse Jet Baghouse Model No. RP-8-36 for the C.E. Classifier Collector with 36, 4-1/4" dia. x 8'-0 long, 16 oz. polyester felt bags for a total of 345 sq. ft. of filtering cloth media, resulting in an air to cloth ratio of 4.5:1. Unit will be of all 12 ga. welded steel construction complete with housing, roof mounted blower for 1500 CFM, pyramid type hopper, support structure, 7" sq. counterweighted dump valve, handrailing, access ladder, compressed air manifold and pressure gauge, magnehelic gauge, and prewired solid state control panel to provide both pulse duration and pulse interval adjustment. Bags will be side accessible. Roof mounted blower will be equipped with a 5 HP direct drive 230/460 volt, 3 phase, 60 hertz motor.

This unit will operate at 1500 CFM and will require approximately 3.7 SCFM of clean dry compressed air at 90-110 PSIG for bag cleaning purposes.

The collected material will be discharged to the opposite side of the push wall.

II. DUST COLLECTION

C. EXHAUST FAN AND DRIVE

One backwardly inclined exhaust fan for 19500 CFM, Class III, Arrangement 1. Fan to operate at 1760 RPM at 56 BHP on a 70 degree F. start-up. Based on a 20 degree F. start-up, the unit will require 63.2 BHP. The fan will be complete with flanged inlet and outlet, drain, inspection door, parallel blade outlet damper, V-belt drives and guard, and arrangement one unitary base.

One 75 HP, 1750 RPM TEFC motor for 230/460 volts, 3 phase, 60 hertz.

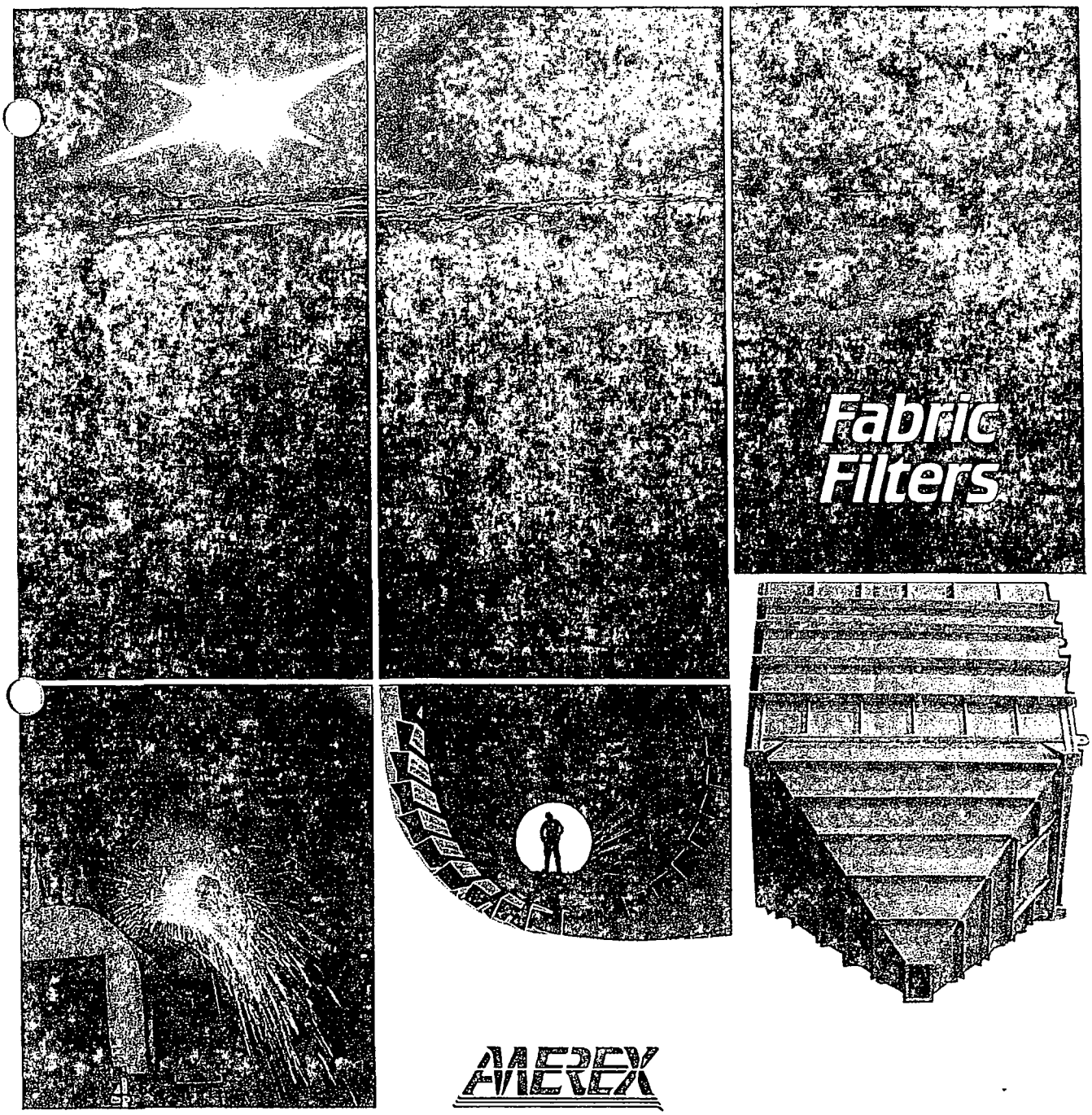

MWPS012308

Amerex is an experienced manufacturer of gas cleaning equipment, uniquely qualified to meet your particulate control and collection needs through fifty years' experience in engineering, manufacturing and installing dust collection equipment and systems.

Research and Development

The Amerex research program provides continued information for new product development and techniques for improved application of existing products. By this constant commitment to research, products provided by Amerex represent the developed state of the art.

Engineering Design

Amerex employs a staff of engineers and designers with decades of experience in all facets of equipment and system design. By continued awareness of the industry, equipment and applications, Amerex provides quality products designed for industrial use at reasonable cost. Flexibility in engineering design allows Amerex to tailor our standard products to meet your need without undue expense, whether you need equipment only or the entire system. Amerex performs to solve the problem within the guidelines presented by you, the customer.

Sales And Service

Amerex's staff of home office personnel is complemented by a highly trained and experienced sales representative force. Your inquiries are professionally handled by engineers and technical specialists who welcome the opportunity to assist in conceptual design and specification through the satisfactory operation of the resulting system. All of the services are provided by Amerex to meet your requirements accurately and economically.

Amerex has the experience to solve your particulate control requirements and provide these benefits to you:

- Economy in capital cost
- Economy in operation
- Guaranteed performance
- Excellent quality
- Engineering expertise
- Design flexibility
- Reliable delivery
- Dependable service

AMEREX Fabric Filters

REX-clean	REX-pulse	REX-aire
Continuous Duty Mechanical Shaker Welded Modular Collector	Continuous Duty Pulse Jet Welded Modular Collector	Continuous Duty Reverse Air Welded Modular Collector
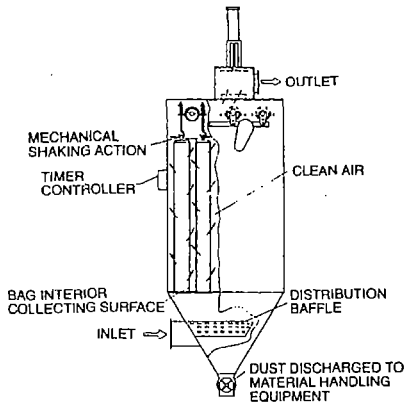	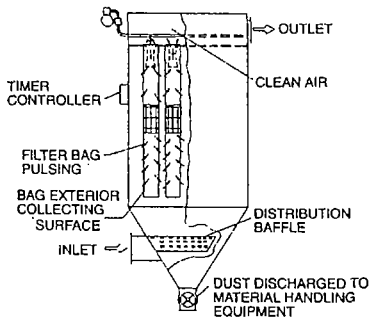	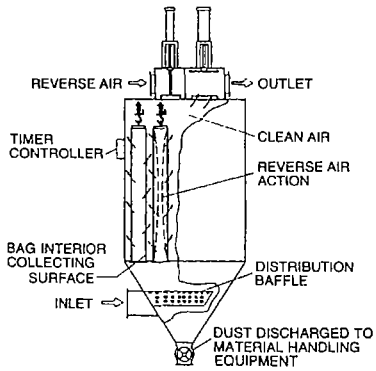
1. Dust-laden air enters the collector through hopper inlet or housing section.		
2. Dirty air is distributed by inlet baffle, reducing air velocity and creating more uniform flow before entering interior surface of bag. Heavy particles fall into hopper by inertial separation protecting bags from abrasion.	2. Dirty air is distributed by inlet baffle, reducing air velocity and creating more uniform flow, which enters bag on exterior surface. Heavy particles fall into hopper by inertial separation protecting bags from abrasion.	2. Dirty air is distributed by inlet baffle, reducing air velocity and creating more uniform flow before entering interior surface of bag. Heavy particles fall into hopper by inertial separation protecting bags from abrasion.
3. Airborne, smaller particles are captured on interior bag surface.	3. Airborne, smaller particles are captured on exterior surface of bag.	3. Airborne, smaller particles are captured on interior bag surface.
4. In nearly all applications 99.9% collection efficiency is achieved with clean air discharging to atmosphere or returned to process.		
5. Dust is removed from bags by preset timed sequence isolating module followed by mechanical shaking action.	5. Dust is removed by timer sequencing control imparting compressed air pulse which removes dust from bag.	5. Dust is removed from bags by preset timed sequence isolating module followed by reverse air cleaning action.
6. Timed cleaning cycle and sequence are adjustable.	6. Pulse duration and interval are preset at the factory but are easily adjustable as required.	6. Timed cleaning cycle is adjustable.
7. Dust falls into hopper and is removed by material handling devices.		

REX-pulse — Pulse Jet Fabric Filter

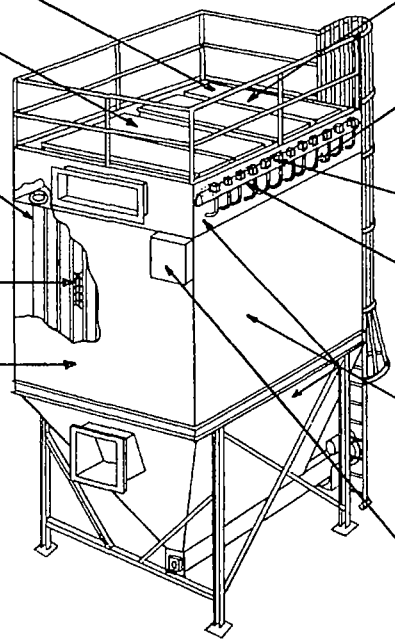

- Top bag removal provides easy and fast replacement on clean air side for worker comfort
- Heavy steel construction to insure integrity of roof surface
- Bags are installed at factory as standard saving expensive field erection time. Standard bag sizes for both design 4 and 6 are available in all fabrics
- Ten wire galvanized cages provide good bag support and enhance bag life
- Corrosion resistive paint system decreases the need for costly maintenance
- All parts are easily serviced from top of unit. No need for additional space consuming catwalk
- Diaphragm and solenoid valves connected by copper tubing to insure long life, not experienced with plastic tubes
- Prewired and prepiped solenoids and diaphragms save expensive field installation cost
- Compressed air manifold is located below the solenoid and diaphragm. This eliminates contamination from trash, oil and water in the diaphragm valve
- Housing, hopper and plenum constructed of all welded 12 gauge HRS. No bolted silicone joints for corrosion and leakage to occur. Any alloy or thickness can be provided
- Control panel is prewired and housed in NEMA enclosure. Magnahelic gauge provides pressure drop reading across unit

Important Standard Features

1. Venturi nozzles are used to maximize cleaning while reducing expensive compressed air.
2. All pneumatics and electrics are tested prior to shipment.
3. Screw conveyor and rotary valves are standard and provided in accordance with specifications.

REX-aire – REX-clean — Reverse Air and Shaker Fabric Filters

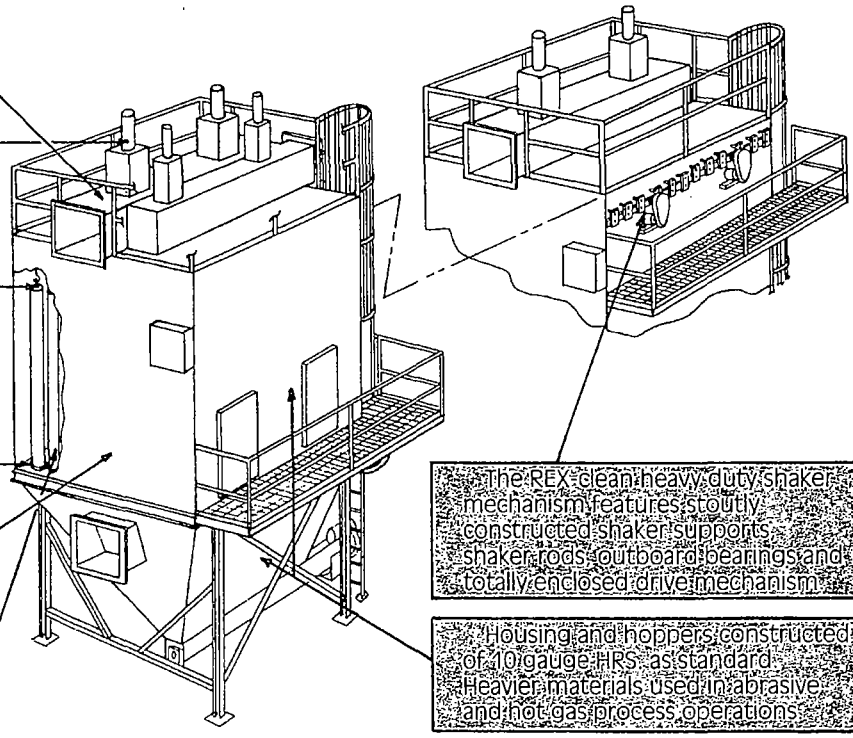

- Heavy steel construction to insure integrity of roof surface
- REX-aire reverse air poppet valves feature cushioned stroke and seat for smooth collapse and inflation of fabric bags
- Bag cap and adjustable tensioning design insure proper operation and longer bag life
- Snap ring bag cell plate design provides easy and fast bag access and replacement. No tools necessary
- Corrosion resistive paint system decreases the need for costly maintenance
- Cell plate construction of 3/16 plate HRS as standard
- The REX-clean heavy duty shaker mechanism features stoutly constructed shaker supports, shaker rods, outboard bearings and totally enclosed drive mechanism
- Housing and hoppers constructed of 10 gauge HRS as standard. Heavier materials used in abrasive and hot gas process operations

REX-pulse

Pulse Jet Fabric Filter

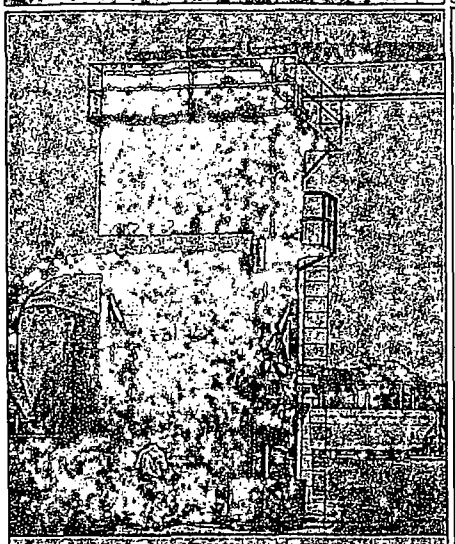

Chemical Polymer Extrusion Control System

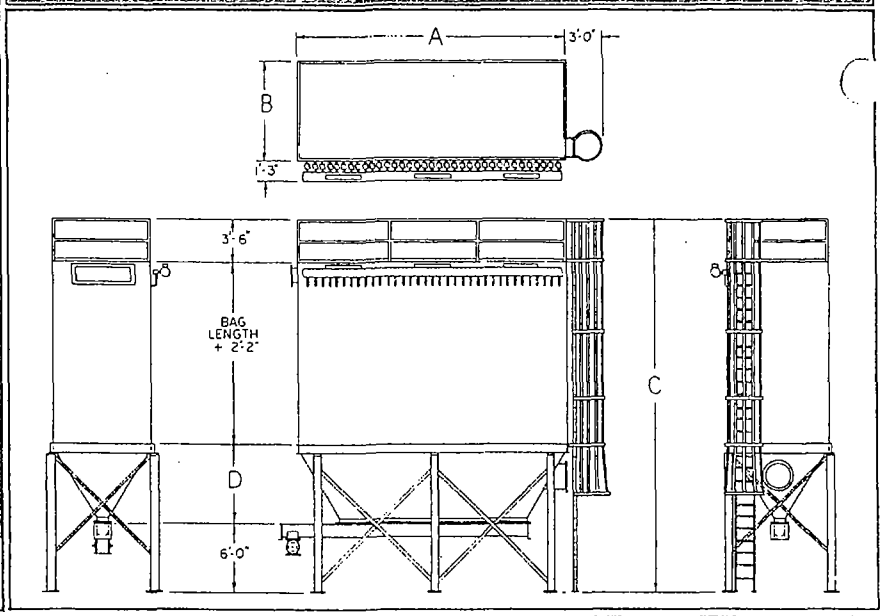

The REX-pulse all welded modular units are available in a wide range of sizes beginning with 72, 90 and 108 bags/unit and increasing in size increments of 36, 45 and 54 bags/unit, respectively. Within normal motor freight limitations, the REX-pulse may be supplied as a single unit in sizes up to 972, 1215, 1458 bags/unit. Further flexibility is provided by the REX-pulse Design 4 or Design 6 series utilizing 4½" or 6" diameter bags in lengths from 4'-0" to 14'-0". For any flow rate and process application requirement, the right size REX-pulse unit is available to meet your needs. Where the application requires less than 72 bags, the REX-vent equipped with appropriate dust discharge features provides the answer to small but necessary dust collection needs. All standard REX-pulse units are designed to withstand ±20 inches water column vacuum or pressure at temperatures up to 450°F. The REX-pulse units feature top bag removal design for ease of installation and maintenance. Optional internal bag design is available upon request.

Selected REX-pulse Design 4 Specifications

Model Number	Cloth Area Sq. Ft.	Dimensions A	Dimensions B	Dimensions C	Dimensions D	Weight, Lbs Total	Weight, Lbs Unit	Weight, Lbs Support Steel	Ladder & Handrail Assembly	No. Of Columns	Number of Solenoids & Diaphragms	No. Of Top Access Hatches	Com pressed Air Reqd
RP-10-72	864	4'-3"	7'-6"	27'-0"	5'-10"	31,680	2,052	880	748	4	6	2	65
RP-10-90	1,080	4'-3"	9'-2"	28'-5"	7'-3"	5,100	2,992	1,300	808	4	6	2	181
RP-10-108	1,296	6'-0"	7'-6"	27'-0"	5'-10"	6,220	4,550	880	790	4	9	3	97
RP-10-180	2,160	9'-2"	7'-6"	27'-0"	5'-10"	10,520	8,375	1,300	845	4	15	5	162
RP-10-225	2,700	9'-2"	9'-2"	28'-5"	7'-3"	13,800	11,090	1,800	910	4	15	5	202
RP-10-270	3,240	10'-10"	9'-2"	28'-5"	7'-3"	15,900	13,130	1,800	970	4	18	6	243
RP-10-324	3,888	10'-10"	10'-10"	29'-10"	8'-8"	17,400	13,790	2,600	1,010	4	18	6	292
RP-10-378	4,536	12'-5"	10'-10"	29'-10"	8'-8"	21,000	17,360	2,600	1,040	4	21	7	340
RP-10-432	5,184	10'-6"	7'-6"	27'-0"	5'-10"	23,000	19,125	2,800	1,075	6	36	12	388
RP-10-495	5,940	18'-11"	9'-2"	28'-5"	7'-3"	26,400	21,910	3,380	1,107	6	33	11	456
RP-10-540	6,480	20'-7"	9'-2"	28'-5"	7'-3"	28,000	23,300	3,570	1,130	6	36	12	486
RP-10-594	7,128	18'-11"	10'-10"	29'-10"	8'-8"	30,000	25,010	3,820	1,170	6	33	11	535
RP-10-648	7,776	30'-3"	7'-6"	27'-0"	5'-10"	32,800	27,380	4,160	1,260	8	54	18	583
RP-10-720	8,640	27'-0"	9'-2"	28'-5"	7'-3"	35,600	29,790	4,550	1,260	8	48	16	648
RP-10-756	9,072	23'-9"	10'-10"	29'-10"	8'-8"	36,900	30,955	4,675	1,270	8	42	14	680
RP-10-810	9,720	30'-3"	9'-2"	28'-5"	7'-3"	38,900	32,660	4,900	1,340	8	54	18	729
RP-10-864	10,368	40'-0"	7'-6"	27'-0"	5'-10"	41,100	34,435	5,200	1,465	10	72	24	778
RP-10-900	10,800	33'-7"	9'-2"	28'-5"	7'-3"	43,300	36,485	5,450	1,365	10	60	20	810
RP-10-972	11,664	44'-11"	7'-6"	27'-0"	5'-10"	46,100	38,760	5,800	1,540	10	81	27	875
RP-10-1080	12,960	40'-1"	9'-2"	28'-5"	7'-3"	50,500	42,610	6,350	1,540	10	72	24	972
RP-10-1188	14,256	36'-9"	10'-10"	29'-10"	8'-8"	54,700	46,300	6,860	1,540	10	66	22	1069
RP-10-1215	14,580	44'-11"	9'-2"	28'-5"	7'-3"	55,600	46,985	6,975	1,640	10	81	27	1094
RP-10-1350	16,200	41'-8"	10'-10"	29'-10"	8'-8"	60,000	51,210	7,150	1,640	10	75	25	1215
RP-10-1458	17,496	44'-11"	10'-10"	29'-10"	8'-8"	64,000	54,950	7,360	1,690	10	81	27	1312

The units shown above are only a portion of the standard units available. FAC Mat 90 to 100 PSIG

Please contact Amerex or your sales representative for further sizes and details.

MWPS012311

Reverse Air and Shaker Fabric Filters

REX-aire & REX-clean

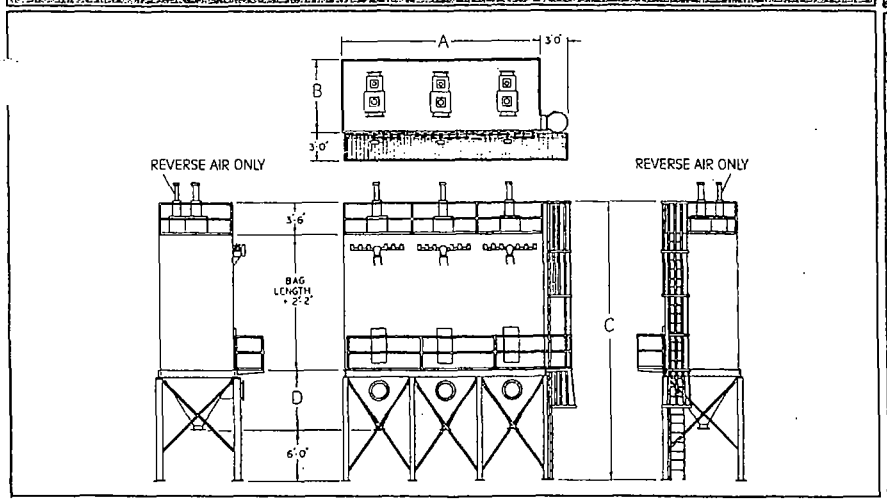

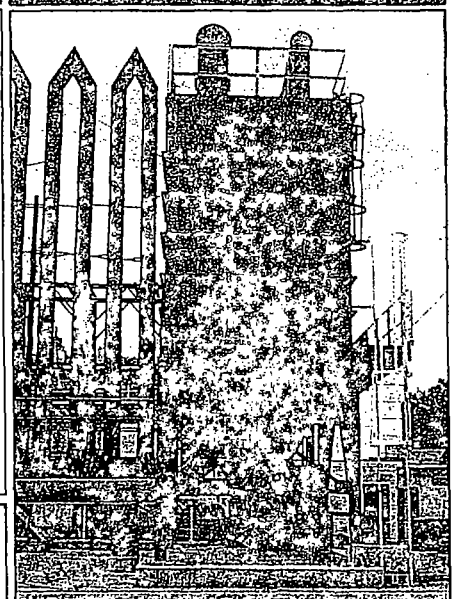

Reverse Air with Redundant Shaker Cleaning — Blast Furnace System

The REX-aire and REX-clean all welded modular and compartment units represent the latest in reverse air and shaker cleaning technology. The standard module includes the basic clean-gas isolation poppet valve and may incorporate either the REX-aire or REX-clean cleaning mechanism, or both if required. The filter medium for these units consists of a woven fabric bag sewn with an upper cuff to accept an end cap for the top attachment and an integral snap ring for quick bag installation in the lower tube sheet. These units are available in a Design 6 or Design 8 series utilizing 6" or 8" diameter bags in lengths of 10'-0" through 16'-0" and 20'-0" to 22'-0" respectively. A wide range of sizes is available beginning with 100 and 144 bags/unit, increasing in multiples of 2, 3 and 4 up to 400 and 576 bags/unit. For any flow rate and process application requirement, the right REX-aire or REX-clean unit is available to meet your needs. All standard units are designed to withstand ±20 inches water column vacuum or pressure at temperatures up to 450°F.

Selected REX-aire and REX-clean Specifications

Model Number	Cloth Area Sq Ft	No. of Modules	Dimensions A	Dimensions B	Dimensions C	Dimensions D	Weight Lbs Total	Weight Lbs Unit	Support Steel	Ladders Handrails & Walkway	No. Of Columns	No. Of Poppet Valves Isolation	No. Of Poppet Valves Reverse Air	No. Of Shaker Drives
DESIGN 6														
RA/RC10-144	2,262	1	10'-8"	8'-10"	28'-10"	7'-4"	10,900	8,264	1,350	1,286	4	1	1	1
RA/RC10-288	4,524	2	21'-4"	8'-10"	28'-10"	7'-4"	20,596	16,528	2,250	1,818	6	2	2	2
RA/RC10-432	6,786	3	32'-0"	8'-10"	28'-10"	7'-4"	27,245	21,642	3,250	2,353	8	3	3	3
RA/RC10-576	9,048	4	42'-8"	8'-10"	28'-10"	7'-4"	40,942	33,056	5,000	2,886	10	4	4	4
RA/RC12-144	2,714	1	10'-8"	8'-10"	30'-10"	7'-4"	11,222	8,546	1,350	1,326	4	1	1	1
RA/RC12-288	5,429	2	21'-4"	8'-10"	30'-10"	7'-4"	21,450	17,092	2,500	1,858	6	2	2	2
RA/RC12-432	8,143	3	32'-0"	8'-10"	30'-10"	7'-4"	32,181	25,638	4,150	2,393	8	3	3	3
RA/RC12-576	10,858	4	42'-8"	8'-10"	30'-10"	7'-4"	42,260	34,184	5,150	2,926	10	4	4	4
RA/RC14-144	3,167	1	10'-8"	8'-10"	32'-10"	7'-4"	11,545	8,829	1,350	1,366	4	1	1	1
RA/RC14-288	6,334	2	21'-4"	8'-10"	32'-10"	7'-4"	22,156	17,658	2,600	1,898	6	2	2	2
RA/RC14-432	9,500	3	32'-0"	8'-10"	32'-10"	7'-4"	32,930	26,487	4,000	2,443	8	3	3	3
RA/RC14-576	12,667	4	42'-8"	8'-10"	32'-10"	7'-4"	43,682	35,316	5,400	2,966	10	4	4	4
RA/RC16-144	3,619	1	10'-8"	8'-10"	34'-10"	7'-4"	11,865	9,109	1,350	1,406	4	1	1	1
RA/RC16-288	7,238	2	21'-4"	8'-10"	34'-10"	7'-4"	22,856	18,218	2,700	1,938	6	2	2	2
RA/RC16-432	10,858	3	32'-0"	8'-10"	34'-10"	7'-4"	34,125	27,327	4,325	2,473	8	3	3	3
RA/RC16-576	14,476	4	42'-8"	8'-10"	34'-10"	7'-4"	44,892	36,436	5,450	3,006	10	4	4	4
DESIGN 8														
RA/RC20-100	4,188	1	11'-0"	9'-2"	39'-3"	7'-9"	14,222	10,922	1,600	1,700	4	1	1	1
RA/RC20-200	8,378	2	22'-0"	9'-2"	39'-3"	7'-9"	27,344	21,844	3,250	2,250	6	2	2	2
RA/RC20-300	12,566	3	33'-0"	9'-2"	39'-3"	7'-9"	40,416	32,766	4,850	2,800	8	3	3	3
RA/RC20-400	16,755	4	44'-0"	9'-2"	39'-3"	7'-9"	53,588	43,688	6,550	3,350	10	4	4	4
RA/RC22-100	4,608	1	11'-0"	9'-2"	41'-3"	7'-9"	14,992	11,577	1,675	1,740	4	1	1	1
RA/RC22-200	9,215	2	22'-0"	9'-2"	41'-3"	7'-9"	28,934	23,154	3,490	2,290	6	2	2	2
RA/RC22-300	13,823	3	33'-0"	9'-2"	41'-3"	7'-9"	42,721	34,731	5,150	2,840	8	3	3	3
RA/RC22-400	18,431	4	44'-0"	9'-2"	41'-3"	7'-9"	56,498	46,308	6,800	3,390	10	4	4	4

The above table is only a partial list of standard size units available.
Please contact Amerex or your sales representative for further sizes and details.

MWPS012312

REX-vent

Pulse Jet Fabric Filter

Fifteen standard models are available to meet your requirements. Units are designed in rectangular and cylindrical arrangements to solve both bin ventilation and pneumatic conveying collection requirements.

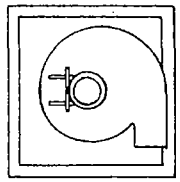

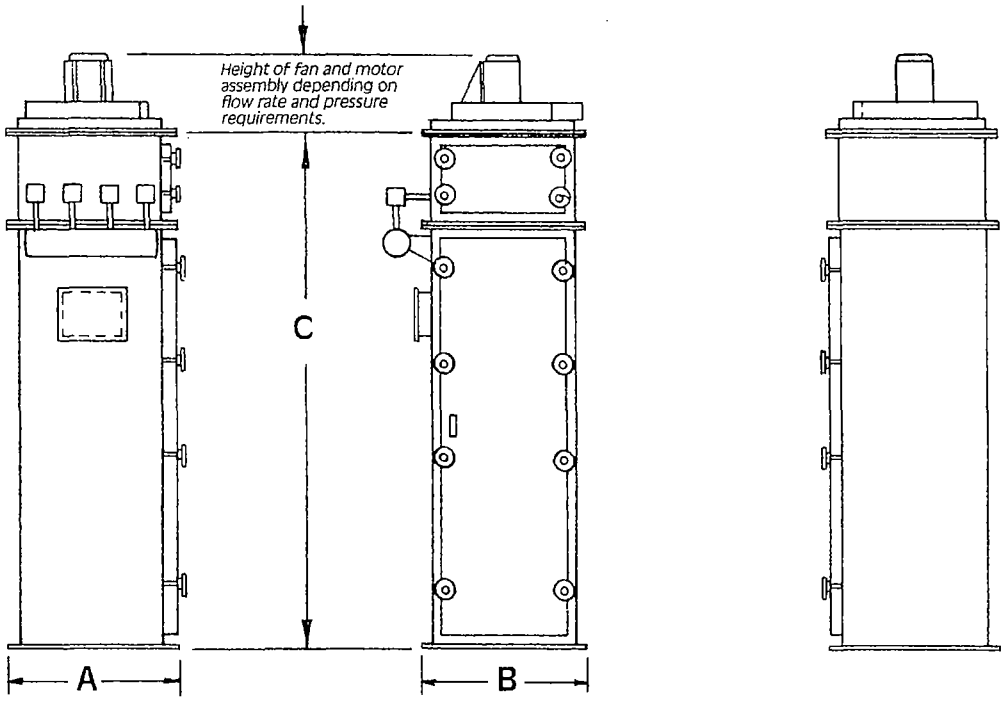

Selected REX-vent Specifications

Model Number*	Cloth Area In Sq Ft	A Width Inches	B Length Inches	C Height Inches	Weight Lbs	Solenoid & Diaphragm Number	Compressed Air Req'd
RV-4-16	76	34	34	69	475	4	3
RV-6-16	115	34	34	93	640	4	4-5
RV-8-16	153	34	34	120	690	4	5-6
RV-4-24	115	34	46	69	650	4	4-5
RV-6-24	172	34	46	93	720	4	5-6
RV-8-24	230	34	46	120	800	4	6-7
RV-4-36	172	46	46	69	750	6	5-6
RV-6-36	259	46	46	93	850	6	6-7
RV-8-36	345	46	46	120	1,150	6	8
RV-4-54	259	46	64	69	925	6	6-7
RV-6-54	388	46	64	93	1,325	6	9-10
RV-8-54	518	46	64	120	1,900	6	10-11
RV-4-72	345	58	64	69	1,200	8	8
RV-6-72	518	58	64	93	2,050	8	10-11
RV-8-72	691	58	64	120	2,700	8	11-12

*Model Number denotes bag length and number of filter bags

†FACFM at 90-100PSIG

MWPS012313

Fabric Filter Control Systems and Engineered Products

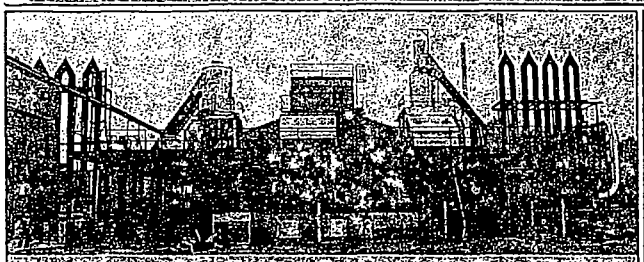

Secondary smelting plant air pollution control systems

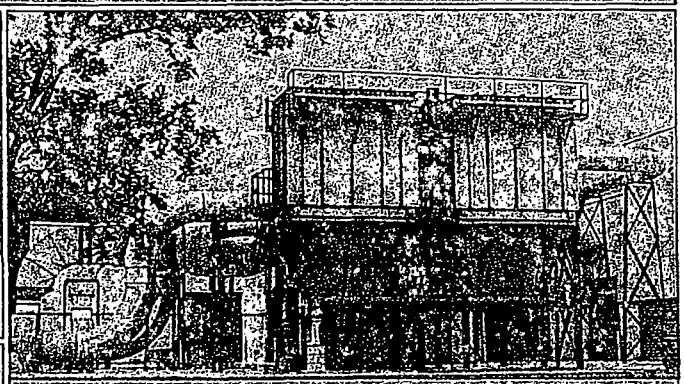

Precision machine tooling fabric filter control systems

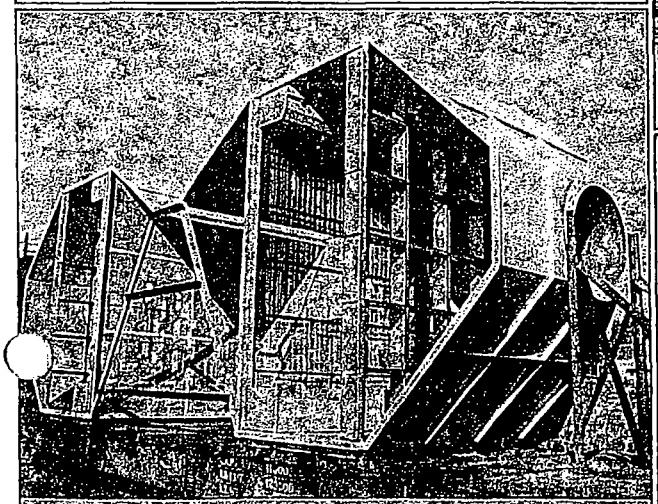

Chemical process air filtration system for compressor intake

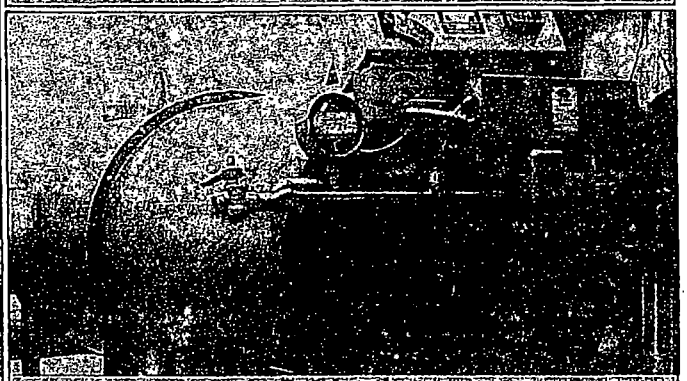

Hydrocarbon incineration with heat recovery

Characteristics of Filter Fabrics

Fabric	Continuous Operating Temperature Degrees Fahrenheit Dry Gas	Saturated Gas (H_2O)	Chemical Resistance: Mineral Acids	Organic Acids	Organic Solvents	Alkalines	Oxidizing Agents	Physical Resistance: Abrasion	Tensile Strength	Pulsing	Shaking	Repressuring
Polyester	275	212	G	G	G	F	G	E	E	E	E	E
Polypropylene	190	190	E	E	G	E	G	E	E	G	E	E
Aramid (Nomex)	425	350	G	E	G	E	P	G	G	E	E	E
Homopolymer Acrylic	284	284	G	G	G	F	G	G	G	G	E	E
Glass	550	550	E	E	E	P	G	P	E	F	P	E
PTFE (Teflon)	500	500	E	E	E	E	E	E	G	G	G	G
Stainless Steel	750	750	G	G	G	E	E	F	E	G	E	E
Cotton	180	180	P	G	P	G	F	G	G	G	G	E
Wool	200	190	G	G	G	P	F	G	P	G	G	G
Acrylic (Orlon)	250	250	G	G	G	F	G	G	G	G	E	E
Polyamid (Nylon)	250	250	F	F	P	G	F	E	E	E	E	E

E: Excellent G: Good F: Fair P: Poor
Names enclosed in parenthesis are registered trademarks of E.I. DuPont DeNemours
Additional fabrics are available upon request

Customers Served by Principals of Amerex

Agriculture
Cargill, Inc.
Goldkist, Inc.
Uncle Ben's Foods

Airline & Aircraft
Eastern Airlines
Lockheed Corporation

Asphalt & Asphalt Process
Blount Construction Co.
GAF Corp.
Clayton Asphalt
Flintkote

Cement
Martin Marietta Corp.
Medusa Cement
National Cement
Penn Dixie Cement
Santee Cement

Chemical and Fertilizer
Chevron
Clorox Corporation
DuPont
Gulf Chemicals
Kaiser Agricultural Chemical
Swift Fertilizer Co.
Thiokol Chemicals
USS Agrichemicals

Clay, Mining & Rock Products
Babcock & Wilcox
Burgess Pigment Co.
Engelhard Minerals & Chemicals
Georgia Lightweight Aggregate
GAF Corp.

Engineering Consultants
Austin Company
Bechtel Corp.
Ebasco Services
Weatherly, D. M.

Incinerator Manufacturers
Envirotech
F.E.I. Corporation
Incinerator Manufacturing
Selco Products

Industrial Boiler Control
Kendall Co.
Union Carbide

Foundry & Steel
DICOA
Georgia Iron Works
Roane Electric Furnace
Stockham Valves & Fittings
Valley Mould and Iron Co.

Metal Machining & Tooling
Crescent Tool Co.
Reliance Electric Co.

Non Ferrous Metals
ALCOA
Chloride
Seitzingers, Inc.
Southeastern Lead

Paper
American Can Co.
Continental Forest Products
Olin Corporation

Plastics & Resins
Owens Corning Fiberglass
Union Carbide

Utilities
Alabama Power Company
Arkansas Power & Light
Carolina Power & Light
Consolidated Edison of N.Y.
Duke Power Company
Georgia Power Company

Wood Products
Boise Cascade
Champion
Montclair Furniture Co.
U.S. Plywood

Amerex, Inc.
P. O. Box 1093
Woodstock, Georgia 30188
(404) 928-0970

10.28.83

Sand Reclaim System

Discussion with Wayne Cropp on possibility of building sand reclaim unit. See ord. # 7719 section 4-6F offsets required for "major" sources. The CHCAPCB definition is consistant with state of TN. that 100 ton/yr uncontrolled is major, (1000 lbs/day, 100 lbs/hr) If less than 100 t/y no offsets req'd... Baghouse - BACT..... will have to test...

MWPS012316

II. DUST COLLECTION

The dust collection system proposed herein has been based on collecting emissions for the no bake sand reclamation process. Based on a 20 ton per hour system, the following describes the recommended dust collection pick up points and air volumes to successfully control the emissions from this no bake process.

Vibra Mill	19,000 CFM
Sand Transfer from Vibra Mill to the Return Sand Belt	1000 CFM
Sand Transfer from Return Sand Belt to the Bucket Elevator	1000 CFM
Elevator bottom	750 CFM
Elevator top	750 CFM
Sand Cooler and Macawber	1500 CFM
TOTAL:	**24000 CFM**

Description of the required components to achieve the above are as follows:

A. Ductwork and Hoods

One (1) lot of 14 ga. carbon steel ducts designed to accommodate the pick up points required. All ducts were sized for approximately 4000 FPM air velocity for the prevention of dust fallout while conserving static losses throughout the system.

The ductwork will connect the Vibra Mill hood, bucket elevator top and bottom, and two return sand transfer points to the dust filter inlet, from the dust filter outlet to the exhaust fan inlet and from the exhaust fan outlet to atmosphere. The ductwork will be of all welded construction with flanged connections, properly supported with adequate clean out openings approximately every 20'-0 in horizontal runs.

The elbows to have a centerline radius of two times the pipe diameter where practical. All dust collection pick up points to have half blast gates to insure proper system balance of air flow.

CHCAPCB - Significant < 25 TPY particulate

assume .01 gr/dscfm

250
8
2000 hr

.0342 lb/min

(continued)

One (1) Vibra Mill hooding enclosure designed to properly control dust emissions from the Vibra Mill area. The hood will be of the canopy type, partially enclosing the Vibra Mill while not interfering with the mill's loading method.

One (1) lot of canopy type hoods designed to control dust emissions from the points of return sand transfer.

The hoods at the same transfer points at at the bucket elevator take-offs will be designed to possess a capture velocity that will properly capture emissions while not removing fine sand particles considered to be important to the sand reclamation process.

All ducts and hoods to have one shop coat of primer and one finished coat of paint.

B. Dust Filter Equipment

One (1) Amerex, or equal, pulse jet fabric baghouse model #RP10-288 with 288 4-1/2" dia. x 10'-0 long, 16 oz. polyester felt bags for a total of 3456 sq. ft. of filtering cloth media. Unit will be constructed of 12 ga. mild steel of all welded construction, complete with housing, pyramid type hopper, support structure to provide 4'-0 clearance under the rotary discharge, handrailing, access ladders, motor operated rotary airlock valve, prewired solid state control panel to provide both pulse interval and pulse duration adjustment, compressed air manifold control valves, and magnehelic gauge.

The unit will operate at 24000 CFM for an air to cloth ratio of 6.7:1.

This unit requires 25.9 CFM of clean, dry compressed air for bag cleaning purposes.

The dust filter will be furnished with a (1) cu. yd. Roura hopper and a dust tight enclosure underneath the rotary discharge to properly contain dust created by the discharging of the collected material.

.05 gr/scf 24000

C. EXHAUST FAN AND DRIVE

One (1) New York Blower size PLR 338, or equal, Class III, Arrangement 1 to deliver 24000 CFM at 11" S.P. at 1745 RPM at 54.9 BHP. Fan to be complete with flanged inlet and flanged outlet, drain, cleanout door, parallel blade outlet damper, V-belt drives and guard, and Arrangement 1 unitary base.

One (1) 75 HP, 1750 RPM TEFC motor for 230/460 volts, 3 phase, 60 hertz.

UNITED STATES PIPE AND FOUNDRY COMPANY

Chattanooga Valve & Fittings Plant

P.O. DRAWER 311

CHATTANOOGA, TENNESSEE 37401

July 28, 1978

Chattanooga - Hamilton County Air Pollution Control Bureau
3511 Rossville Blvd.
Chattanooga, TN. 37407

Gentlemen:

Enclosed is an application for an installation permit to install control equipment on the No. 9 Unit sand handling, preparation and shake-out, at the U. S. Pipe and Foundry Company, Valve and Fittings Plant. The subject control equipment is being installed pursuant to Rule 20.2 of the Chattanooga - Hamilton County Air Pollution Control Rules and Regulations. This application is made subject to acceptance of the proposed control equipment as satisfying the full intent and purposes of Rule 19 of the Chattanooga - Hamilton Country Air Pollution Rules and Regulations.

Yours truly,

UNITED STATES PIPE AND FOUNDRY COMPANY

James L. Smallwood,
Plant Engineer

JLS:gjp

Enclosures

PROCESS WT.

Iron Poured (Jan. - May 1978)

# 4 Unit	-	2,422	tons
# 9 Unit	-	14,858	tons
# 10 Unit	-	400	tons

17,680 tons x 2 (loss correction) = 35,360 tons

35,360 tons ÷ 21 wks ÷ 5 day/wk ÷ 16 hr/day = 21.05 ton/hr.

Design melt rate for cupola = 25 ton/hr.
(Based on cupola permit application)

Ratio of design iron melt to actual used

$$\frac{25 \text{ ton/hr}}{21.05 \text{ ton/hr}} = 1.18$$

Design iron useage at #9 Unit

14,858 tons x 1.18 ÷ 21 ÷ 5 ÷ 16 = 10.435 $\frac{\text{tons}}{\text{hr.}}$
Sample period (hr.)

x 2

20.87 tons/hr (Iron)

Assume 10 : 1 sand to iron ratio

208.7 + 20.87 = 229.57 tons/hr
(Sand) (Iron)

= 459,140 lb/hr.

FORM E001

BASIC APPLICATION FOR EQUIPMENT / AIR POLLUTION PERMIT*

1. Name of Company U. S. Pipe & Foundry Co. 2. SIC Code: 3321

3. Company Official to Contact Jim Moore 4. Phone No: (615) 265-4611

5. Mailing Address for Line 3: 2701 Chestnut St., Chattanooga, TN. 37408
Street City State Zip Code

6. Company Address
(if different from line 5): Same
Street City Zip Code

7. Application for:

[X] Installation Permit

[ ] Certificate of Operation (Initial Application)
Temp. Operating Permit No.: _____

[ ] Temporary Operating Permit
Instal. Permit No.: _____

[ ] Certificate of Operation (Renewal)
Certificate of Operation _____

8. Type of equipment for which application is made:

[X] Process Equipment (Submit E010 or Form E010A; [ ] Already Submitted)

[ ] Fuel Burning Equipment (Submit Form E011; [ ] Already Submitted)

[ ] Incineration Equipment (Submit Form E012; [ ] Already Submitted)

[ ] Odor or Miscellaneous (Specify) _____ (Submit Form E013; [ ] Already Submitted)

[ ] Minor Pollution Source—less than 1000 lbs / year and 10 lbs / day total uncontrolled contaminant emissions (Submit Form E014; [ ] Already Submitted)

9. The following forms are filed with this application: E010, E103, E106

10. Equipment Name: Unit No. 9 - Sand handling and preparation and shake-out.

11. If Application is for a Temporary Operating Permit or Certificate of Operation (Initial or Renewal) are there any changes since previous application in the equipment or operational procedures which might:

NA

A) Increase, decrease, or alter process materials, fuel, refuse type, etc.
[ ] YES [ ] NO

B) Increase, decrease, or alter emissions or emission points
[ ] YES [ ] NO

(If either answer is YES, new forms E010, E011, E012, E013, or E014 and associated forms must be filed with this application.)

* Form must be completely filled out before it is acceptable.

MWPS012322

12. Process Weight, lb/hr, (Item 6 on Form E010), Incineration Rate, lbs/hr, (Item 3C on Form E012), or Fuel Burning Rate, 1000 BTU/hr,(Item 7C on Form E011):

460,000 lb./hr.

This is to certify that I am familiar with operations concerning this equipment and the information provided on this application is true and complete to the best of my knowledge:

Mail To:
CHATTANOOGA–HAMILTON COUNTY
AIR POLLUTION CONTROL BUREAU
3511 Rossville Boulevard
Chattanooga, Tennessee 37407

Company Official: _____
Signature

Title: Plant Engineer

Date: July 28, 1978

DO NOT WRITE BELOW THIS LINE

_____ Permit Fee

_____ Inspection Approval Date Inspected: _____

_____ Reviewed by Supervisor

_____ Check Received. Amount _____ Check Number _____

_____ Entered into tape file and state keypunch form filed

_____ Registered in Suspense File

SPECIAL CONDITIONS IMPOSED: _____

Expiration Date: _____

Permit Number: _____

Approved By: _____
Director

Date: _____

FORM: E103

WET SCRUBBING DEVICE
AIR POLLUTION CONTROL EQUIPMENT DATA

1. Name of Company (as shown on Line 1, Form E001): U. S. Pipe & Foundry Company

2. Equipment Name (as shown on Line 10, Form E001): No. 9 Unit - Sand Handling and preparation and shake-out.

3. Manufacturer of Wet Scrubber: Ducon or equivalent

   Model Number: 38 Cost of Wet Scrubber: _____

4. Does wet scrubber contain pre-cleaning equipment: ☐ Yes ☒ No

   If yes, what type: _____

   (File applicable form for control equipment).

5. Volume of gas discharged from wet scrubber at dry standard conditions:

   35,100 dscfm

6. Pressure Drop Across Wet Scrubber:

   Stated by manufacturer: 10 inches of H_2O
   Measured (actual): _____ inches of H_2O

7. Properties of Gas Inlet to Scrubber:

A.	Temperature of inlet gas (Ti):	100	°F
B.	Pressure of inlet gas (Pi):	-	inches of H_2O
C.	Inlet gas velocity (Vi):	84.4	ft/sec
D.	Area of inlet (Ai):	7.9	ft^2
E.	Inlet gas density (ρg):	0.07	lbs/ft^3
F.	Gas viscosity (μ):	-	lbs/ft-sec
G.	Moisture in gas stream:	4	%
H.	Dew point of gas stream:	100	°F

8. Indicate which of the following are components of the wet scrubber:

   ☐ Flow Rate Instrument ☐ Inlet Gas Temperature Instrumentation

   ☐ Transmissometer ☒ Differential Pressure Instrumentation

   ☐ Heat Exchanger ☐ Gas Preheater

9. Type of Wet Collection Device:

- [ ] Spray Chamber
- [ ] Mechanical Scrubber
- [X] Venturi Scrubber
- [ ] Packed Tower
- [ ] Centrifugal Scrubber
- [ ] Cyclonic Scrubber
- [ ] Variable Pressure Drop Orifice Scrubber
- [ ] Orifice Type Scrubber
- [ ] Wet Impingement Collector
- [ ] Wet Filter

10. Operation of Wet Scrubber:

- [X] Continuous
- [ ] Intermittant
- [ ] Periodically

Pressure Drop: 10 inches H_2O

Does scrubber have a special wear resistant plate? [X] Yes [ ] No

Shape of wet scrubber (chamber):

- [ ] Rectangular
- [ ] Cubical
- [X] Cylinderical
- [ ] Other (Describe): _____

Size of scrubber (volume): _____ ft^3

Give dimensions (ft): 22 Height; _____ ~~Length~~; 114" Dia. ~~Width~~ (Separator cylindrical)

Construction Material: Carbon Steel

11. Collecting Medium Data:

Type Scrubbing Liquid:

- [X] Water
- [ ] Other (list chemical agent(s) used): _____

Purpose for Chemical Agent:

- [ ] Surface Reactant
- [ ] Neutralizing Agent
- [ ] Wetting Agent
- [ ] Other (specify): _____

Liquid Consumption Rate: _____ gallons per 1000 cfm of gas

Inlet Liquid Pressure: _____ psi

Inlet Liquid Temperature: Normal _____ °F

Maximum _____ °F

12. Answer only the questions which are applicable to your control equipment.

Direction of spray (to the gas flow): ☐ Normal ☒ Parallel ☐ Tangential

Flooded Throat

~~Type of Spray Nozzle~~: ☐ Hollow Cone ☐ Full/Solid Cone ☐ Atomizing

Describe Impingement Plate(s): _____

_____

Number of Impingement Plates in Collector: _____
Number of Holes Per Impingement Plate: _____
Area of Each Impingement Plate: _____
Average Area of Each Opening Through Plate: _____

Type of Packing (describe): _____

_____

Height of Packing Material in Collector: _____ ft

Describe the Type of Impingement Target Used: _____

_____

13. Type of Mist Eliminator (describe): Cyclonic

_____

14. Dust Size Distribution in Microns (μ):

Dust Type(s): _____

Size	0-5μ	5-10μ	10-20μ	20-44μ	Greater than 44μ
Give % by weight	%	%	%	%	%

15. Sludge Disposal Method:

☒ Automatic ☐ Manual ☐ Other (describe): _____

How often are hoppers emptied? Every _____ hours

Is a water clarification and recycling system utilized by this equipment? ☒ Yes ☐ No

Site of sludge disposal: Plant Landfill

16. Particulate Control Efficiency:

Estimated Efficiency
~~Manufacturer's Stated Efficiency~~: 99 %
Required efficiency: _____ %
Operating efficiency (performance testing): _____ %

17. Location of the fan: [X] Clean air side (pull) [ ] Dirty air side (push)

TYPE FAN	TYPE BLADE
A. [X] Centrifugal (radial-flow)	[ ] Forward curve [ ] Backward curve [ ] Straight
B. [ ] Axial-flow (propeller)	[ ] Tube-axial [ ] Vane-axial [ ] Propeller

FAN DATA: Diameter: 71-3/4 ins. Braking HP: 161 BHP Speed: 800 RPM

Inlet area: 9.2 ft^2 Outlet area: 9.17 ft^2 Motor HP: 175 HP

Volume: 35,100 cfm @ STP Static pressure: 18.5 inches Wc

[X] Standard [ ] Heavy Duty

Submitted a copy of Manufacturer's Multirating Table: [ ] Yes [X] No

Special Materials of Construction:

[ ] Bronze alloy [ ] Aluminum [ ] Stainless steel [ ] Bisonite

[ ] Zinc chromate primer [ ] Rubber, phenolics, vinyls, epoxy covering

C. [ ] Compressor	[ ] Positive-displacement [ ] Dynamic [ ] Reciprocating

Submit plans or drawing of this equipment.

This is to certify that I am familiar with the operations concerning this equipment and that the information provided on this application is true and complete to the best of my knowledge. This form must be completely filled out before acceptable.

Company Official: _____

CHATTANO[illegible] COUNTY
AIR PO[illegible] BUREAU
[illegible]
CHAT[illegible] 37407

Title: Plant Engineer

Date: July 28, 1978

DO NOT WRITE BELOW THIS LINE

_____ Engineer Approval

This form corresponds to permit number: _____

Special Notations: _____

MWPS012327

POLLUTION ESTIMATION FORM

FORM: E106

1. Name of Company (as shown on Line 1, Form E001): U. S. Pipe & Foundry Company

2. Equipment Name (as shown on Line 10, Form E001): No. 9 Unit - Sand Handling and preparation and shake-out.

3. Type of pollutant for which estimation is made: Particulate Matter

4. Pollutant Emission Factor (PEF): 58.5 lb./ton iron
(Give value & units in lbs/ton, lbs/lbs, lbs/gal, gr/ft^3, etc.)

Source of Emission Factor: Engineering Estimate (See attached)

5. Uncontrolled Pollution Emission Rate:

58.5 (PEF from Item 4) x 20.87 ton iron/hr. (Give operating rate for this equipment and the appropriate units in either lbs/hr, tons/hr, gal/hr or CFM) = 1220.5 lb./hr (Give value & units)

6. Uncontrolled Pollution Emission Rate: 1220.5 (from Item 5 convert to lbs/hr) lbs emitted/hr

This is to certify that I am familiar with the operations concerning this equipment and that the information provided on this application is true and complete to the best of my knowledge. This form must be completely filled out before acceptable.

Mail To:
CHATTANOOGA-HAMILTON COUNTY
AIR POLLUTION CONTROL BUREAU
3511 Rossville Boulevard
Chattanooga, Tennessee 37407

Company Official: _____
Signature

Title: Plant Engineer

Date: July 28, 1978

DO NOT WRITE BELOW THIS LINE

_____ Engineer Approval

This form corresponds to permit number: _____

Special Notations: _____

MWPS012328

CONSTRUCTION PERMIT
APPLICATION - CHATTANOOGA VALVE & FITTINGS
#9 Unit

Form: - E106

Calculate emission factor:

From GCA Report	-	Shakeout	- 32.2 lb/ton iron
		Mulling	- 20.6
		Screening	- 10.0
		Sand Handling	- 10.3
			73.1

Estimated capture efficiency - 80%

Emission factor:

73.1 lb/part/ton iron x .8 = 58.5 lb/ton

Calculate emissions:

Design rate for iron - 20.87 ton/hr.

20.87 ton iron/hr x 58.5 lb/ton = 1220.5 lb/hr

Form E103

Calculate STP Volume Conditions @ Fan

Assume 40,000 ACRM @ 100° F Sat.

$$\frac{40{,}000 \text{ CFM}}{15.2 \text{ cu.ft/lb. da}} \times \frac{\text{cu.ft}}{0.075 \text{ lb/da}} = 35{,}093 \text{ SCFM}$$

FORM: E010

PROCESS EQUIPMENT APPLICATION

1. Name of Company (as shown on Line 1, Form E001): U. S. Pipe & Foundry Company

2. Equipment Name (as shown on Line 10, Form E001): No. 9 Unit - Sand Handling and preparation, and shake-out.

3. Type of Process: Preparation of molding sand and separation of castings from sand.

4. Major Raw Materials Processed: Iron castings and sand.

5. Date of installation, initial start-up, or alternation (such that potential emissions were increased) of equipment or device for which permit is applied for:

[X] Before January 1, 1973 - Schedule 1

[ ] After January 1, 1973 - Schedule 2

6. Process Weight: 460,000 lbs/hr

(This is the total weight of all materials introduced into the process expressed in lbs/hr.)

7. Control Equipment Data:

A. [ ] Emissions Uncontrolled

B. [ ] Baghouse (File Form E102)

C. [X] Wet Collecting Device (File Form E103)

D. [ ] Electrostatic Precipitator (File Form E104)

E. [ ] Inertial Separators (File Form E105)

F. [ ] Other - Specify

8. Control Equipment Efficiency for each pollutant emitted by this equipment (from appropriate Form E102, E103, E104, E105, E107 or enter zeros if A is checked in Item 7):

	% EFFICIENCY
Particulates	99
SO_x	
NO_x	
CO	
Hydrocarbons	
Other:	

MWPS012330

9. Actual Particulate Emissions:

A. Uncontrolled Emissions: 1220.5 lbs/hr (File Form E106)

B. Actual Emissions: _____ lbs/hr (Submit stack test report)

OR

Estimated Emissions:

$\left(\frac{100\% - \text{Control Efficiency } (\%)}{100\%}\right)$ x Uncontrolled Emissions = 12.2 lbs/hr

10. Actual Sulfur Oxide Emissions:

Specify air required for process: _____ SCFM

A. Uncontrolled Emissions: _____ lbs/hr (File Form E106)

NA

B. Actual Emissions: _____ lbs/hr (Submit stack test report)

OR

Estimated Emissions:

$\left(\frac{100\% - \text{Control Efficiency } (\%)}{100\%}\right)$ x Uncontrolled Emissions = _____ lbs/hr

11. Allowable Nitrogen Oxide Emissions:

A. Nitric Acid Plants Emission Limitation (Allowable emissions will be in Item 7 on Form E101): _____ lbs/hr as NO_2

NA

B. All other process equipment emission limitations: ☐ No Requirement

12. Nitrogen Oxide Emissions (lbs/hr as NO_2):

A. Uncontrolled Emissions: _____ lbs/hr (File Form E106)

B. Actual Emissions: _____ lbs/hr (Submit stack test report)

NA

OR

Estimated Emissions:

$\left(\frac{100\% - \text{Control Efficiency } (\%)}{100\%}\right)$ x Uncontrolled Emissions = _____ lbs/hr

13. Other Air Contaminant Emissions - Specify:

AIR CONTAMINANT	AMOUNT EMITTED (lbs/hr)

NA

☐ The values shown were determined by actual stack test. (Submit a copy of stack test with full details).

☐ The values shown were estimated. (File Form E106 for each pollutant shown).

14. Those emissions indicated in Item 13 may at times under normal operating conditions cause (check one or more):

- [ ] Odors
- [ ] Eye Irritations
- [ ] Property Damage
- [ ] Other nuisances outside of plant property
- [ ] Health Effects
- [X] No environmental damage

15. Emission Point Data:

Stack Height (emission point) above ground:	32	ft
Ground Elevation above sea level at stack base:	666+	ft
Stack Diameter:	3.4	ft
Volume of gas discharged into atmosphere:	35100	cfm
Gas exit temperature:	100	°F

16. Average Equipment Operating Time:

A.	Daily	24	hours
B.	Weekly	5	days
C.	Yearly	52	weeks

This is to certify that I am familiar with the operations concerning this equipment and that the information provided on this application is true and complete to the best of my knowledge. This form must be completely filled out before acceptable.

CHATTANOOGA-HAMILTON COUNTY
AIR POLLUTION CONTROL BUREAU
3511 ROSSVILLE BOULEVARD
CHATTANOOGA, TENNESSEE 37407

Company Official: _____
Signature

Title: Plant Engineer

Date: July 28, 1978

NOTE: Equipment must also meet Visible Emission Code.

DO NOT WRITE BELOW THIS LINE

_____ Information approved and entered on Permit Inspection Form (Engineer)

_____ lbs/hr (allowable particulate emissions) _____ PPM by volume as SO_2

UTM Coordinates of Company: EW _____ NS _____

This form corresponds to permit number: _____

Special Notations: _____

MWPS012332

BIRMINGHAM, ALA.

U.S. PIPE & FOUNDRY CO.
CHATTANOOGA FITTINGS PLT
SAND SHAKEOUT WET
SCRUBBER SYS.

JRM 4/26/73

1/8" = 1'-0"

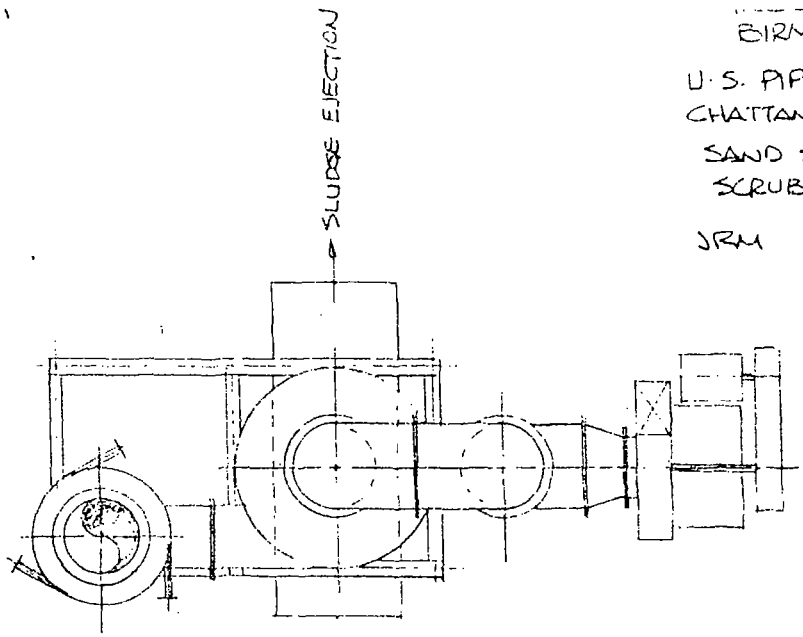

PLAN

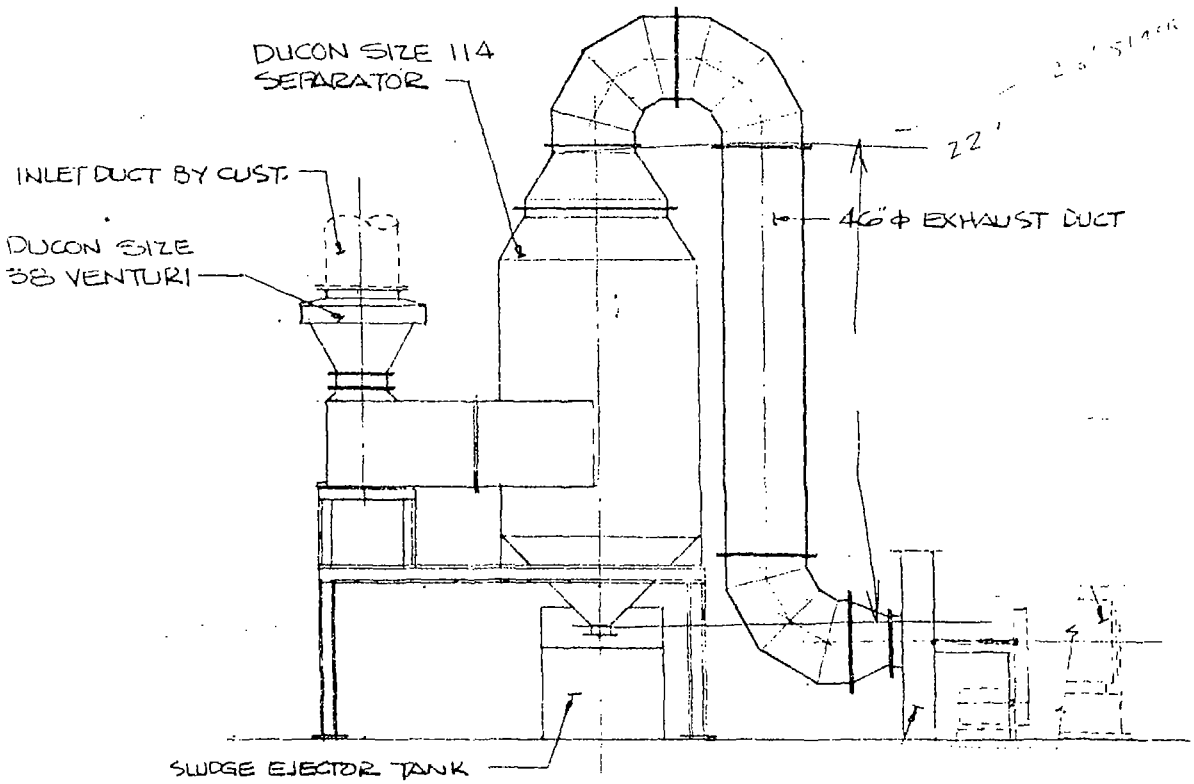

ELEVATION

MWPS012333

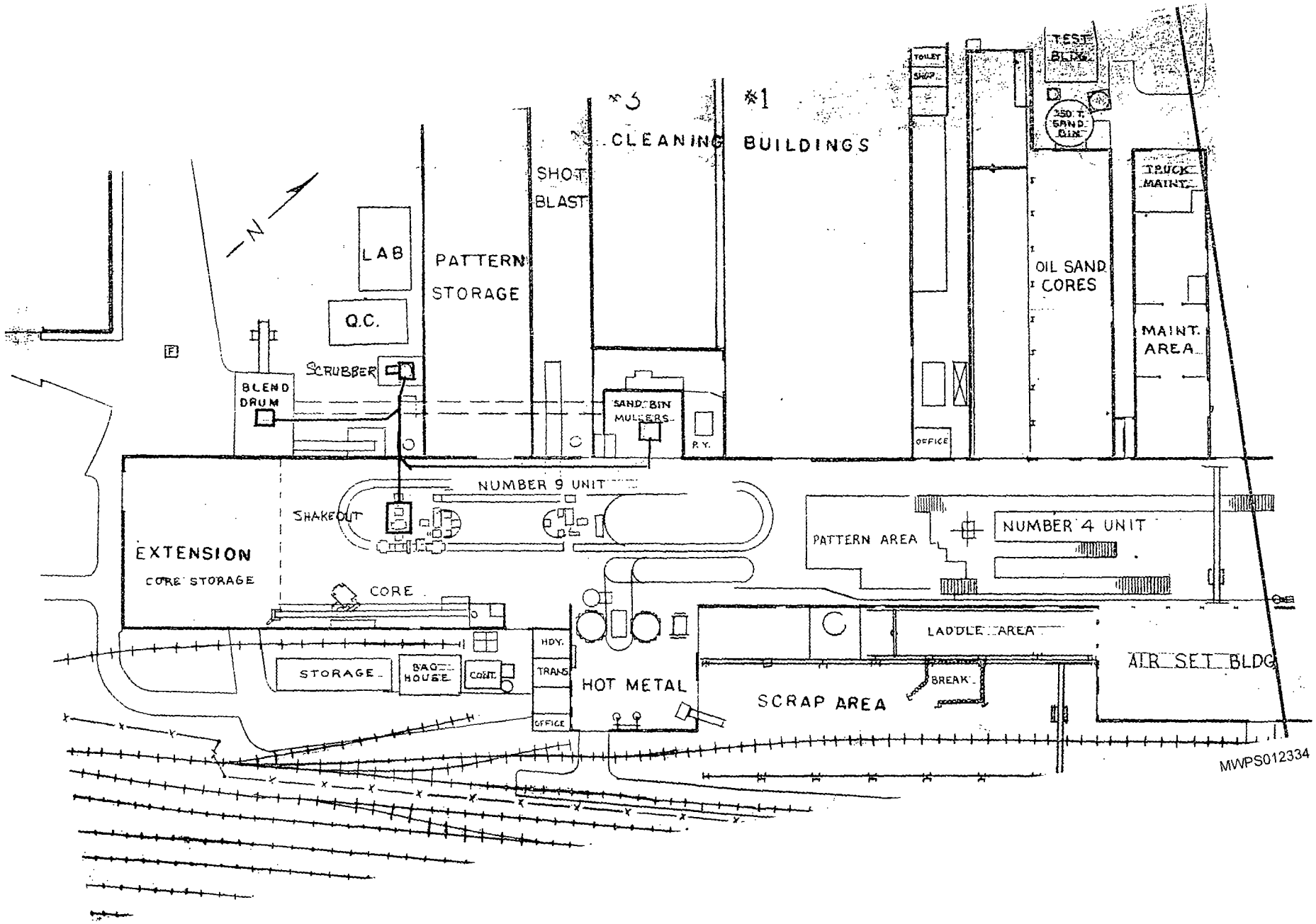
N
LAB
Q.C.
PATTERN STORAGE
SHOT BLAST
#3 CLEANING
#1 BUILDINGS
TOILET
SHOP
TEST BLDG.
350 T SAND BIN
TRUCK MAINT.
OIL SAND CORES
MAINT. AREA
OFFICE
SCRUBBER
BLEND DRUM
SAND BIN MULLERS
R.Y.
NUMBER 9 UNIT
SHAKEOUT
EXTENSION
CORE STORAGE
CORE
PATTERN AREA
NUMBER 4 UNIT
LADDLE AREA
AIR SET BLDG
STORAGE
BAG HOUSE
CONT.
HDY.
TRANS
OFFICE
HOT METAL
SCRAP AREA
BREAK

MWPS012334

CHATTANOOGA GENERAL FOUNDRY
PROCESS EQUIPMENT

QUANTITY			DESCRIPTION	LOCATION	COMMENTS
2	Yes	✓	90" I.D. Steel Shell Cupolas w/60" I.D. Refractory Lining Coke Consumption: Approximately 15 ton per 8 hours Blower Output: 10,400 CFM	South End No. 1 Foundry Building	Only one Cupola used (alternated daily)
1	No	✓	Print Machine, GAF OZALID Streamliner 220, 230 CFM Exhaust	Main Office Engineering Department	
C 1	Yes	✓	Bag House, Pangborn C-90-CM (Converted) 11,220 CFM	North side #2 Shed	Used for Pangborn #12' LK Rotoblast Table #2 Shed
1	Yes	✓	Blast Cleaning Table, Pangborn #12' LK Rotoblast	#2 Shed	
C 3	Yes	✓	Bag House, Pangborn ((2) 8,250 CFM ea. C-90-CM) ((1) 12,600 CFM C-120-CM)	West side #3 Shed	Used for (3) Pangborn #34 GN-M Rotoblast Barrels #3 Shed
3	Yes	✓	Blast Barrels, Pangborn #34 GN-M Rotoblast Barrels	#3 Shed	
C 1	Yes	✓	Bag House, Arrestall 1200, 1,500 CFM, American Air Filter	North side Shell Core Building	Dust Collection for Sand Scales and Resin Scales
C 1	Yes	✓	Silo Vent Filter Bag House, Danco MHS-BVF-49, 392 sq. ft. Bag Area	Top of Sand Silo at Shell Core Building	Filters Discharged Air
C 1	Yes	✓	Bag House, Pangborn #408 CH, 19,000 CFM	North side #1 Shed	Used for Pangborn #8' LK-1 Rotoblast Table and 6'x8' Simplicity Core Shake-out
1	Yes	✓	Blast Cleaning Table, Pangborn #8' LK-1 Rotoblast	East End #1 Shed	
1	Yes	✓	Core Shake-out, Simplicity 6'x8'	East End #1 Shed	

MWPS012335

ANTITY			DESCRIPTION	LOCATION	COMMENTS
2	Yes	✓	Roto-Clone Type D Size 24 15,000 CFM American Air Filter	North Side of #2 Cleaning Shed	Used for (4) Grinding Booths #2 Shed & Sand Muller @ Demmler
1	Yes	✓	Roto-Clone Type D Size 20 10,600 CFM American Air Filter	North Side of #2 Cleaning Shed	Used for (2) Grinding Booths #2 Shed
1	Yes	✓	Roto-Clone Type D Size 12 3,000 CFM American Air Filter	North Side of #2 Cleaning Shed	Used for (1) Swing Grinder #2 Shed
3	Yes	✓	Roto-Clone Type D Size 24 15,000 CFM American Air Filter	West side of #3 Cleaning Shed	Used for (4) Booths 1 Swing Grinder & 3 Hoods over belts
3	Yes	✓	Roto-Clone Type D Size 24 15,000 CFM American Air Filter	West side of #3 Cleaning Shed	Used for (9) Grinding Booths, (1) Stationary Grinder, (2) Swing Grinders and (3) Hoods over belt
3	Yes	✓	Roto-Clone Type D Size 24 15,000 CFM American Air Filter	West side of #3 Cleaning Shed	Used for (10) Grinding Booths, (2) Swing Grinders and (1) Stationary Grinder
2	Yes	✓	Roto-Clone Type D Size 24 15,000 CFM American Air Filter	North side of #1 Cleaning Shed	Used for (9) Grinding Booths and (5) Stationary Grinders
1	Yes	✓	Roto-Clone Type D Size 24 15,000 CFM American Air Filter	North side of #1 Cleaning Shed	Used for (2) Swing Grinders
1	Yes	✓	Roto-Clone Type D Size 10 2,600 CFM American Air Filter	South of Machine Shop Doorway	Used for (3) Stationary Grinding Stands in Machine Shop (Seldom Used)
3	~~Yes~~	✓	Exhaust fans over Pouring Run at #9 Unit, 40" dia. American Standard Vaneaxial fans with 20 H.P., 1800 RPM motors, 31,000 CFM each	#9 Unit Pouring Run	5 fans are located above pouring run, but 2 of these are intake fans.

cocess Equipment
age 3

JANTITY			DESCRIPTION	LOCATION	COMMENTS
2	Yes No	✓	Exhaust fans over Cooling Run at #9 Unit, 30" dia., American Standard Vaneaxial fans w/ 7 1/2 H. P., 1800 RPM Motors, 15,000 CFM each	One at North end of Loop, & one at South end of Loop	
2	Yes No	✓	Exhaust fans over Cooling Run at #9 Unit, 36" dia. American Standard Vaneaxial fan w/ 7 1/2 H.P., 1800 RPM motor, 20,000 CFM each	One at North-West part of Loop, and one at South-West part of Loop	
1	Yes	✓	Size 445 American Centrifugal Fan with 100 H.P. motor for C. B. Schneible Co. #129 F21Bj Multi-Wash Dust Collector	Outside Southwest side of #1 Foundry Building	As designed, intake to the dust collector is as follows: #9 Sand Mullers 7,800 CFM, #9 Flask Shakeout 16,000 CFM, #9 Sand Return 15,900 CFM: Total Intake - 39,700 CFM
2	Yes	✓	Beardsley & Piper 100B Speedmullers	West of #9 Unit	Connected to Schneible Dust Collector
1	Yes	✓	Herman Pneumatic Flask Shakeout	#9 Unit, South End	Connected to Schneible Dust Collector
1	Yes	✓	Link Belt Sand Return System	#9 Unit, West Side	Connected to Schneible Dust Collector
1	No	✓	Exhaust fan for blacking Booths. 48" dia. fan by Blow Pipe, Inc., with 10 H.P. motor, Approx. 33,000 CFM, Connected to five branch ducts, each duct serving two booths	North side of Shell Core Building	
1	No	✓	Exhaust fan for Blacking Booths. 48" dia. fan by Blow Pipe, Inc., with 10 H.P. motor, Approx. 33,000 CFM, Connected to three branch ducts, each duct serving two booths	South side of Shell Core Building	

MWPS012337

QUANTITY			DESCRIPTION	LOCATION	COMMENTS
C16	Yes	No	Blacking Booths for Shell Cores	Shell Core Building	Connected to Exhaust Fans
1	Yes	✓	Beardsley & Piper Solvent Drying Unit, Blowing Type, with 7 1/2 H.P., 1800 RPM motor	West end of Shell Core Building	Blows air through Speedmuller & up stack to vent at top of building
1	Yes	✓	Beardsley & Piper Cooling & Conveying Unit for prepared shell core sand, with 50 H.P. motor & 15,000 CFM cyclone Collector	West end of Shell Core Building	Transports prepared sand from lower level of Shell Core Building into storage tank at upper level
C 1	Yes	✓	Fine-Saver Cyclone with 1,300 CFM exhaust fan, and 1 1/2 H.P. motor	West end of Shell Core Building	Collects fines at upper part of sand bin and re-mixes them at a lower level
C 1	Yes	✓	Exhaust fan over Blending Drum, 24" dia. tubeaxial fan w/10 H.P. motor, geared to deliver 12,000 CFM. (Maximum capacity would be 16,500 CFM)	Blending Drum outside Southwest side of #1 Foundry Building	Used to exhaust d[illegible]t from Blending Dru[illegible]
1	Yes	✓	Mag-Coke process for making nodular iron. Iron is treated with magnesium inpregnated coke to produce nodular iron. Mag-Coke is placed in the bottom of a treatment ladle and molten iron is poured in on top of it. The reaction between the magnesium and the iron causes the carbon which is dissolved in the iron, to precipitate out of solution upon cooling in the form of carbon nodules rather than as flat flakes	Cupola Area, #1 Foundry Bldg.	Approx. 1/5 of Magnesium content of the Mag-Coke is recovered in the iron. Mag-Coke is used at the rate of 1% of the total iron per ladle. (50 lbs. Mag-Coke, 5000 lbs. of iron) Mag-Coke is 50% mag. and 50% coke. Unrecovered mag. burns Coke remains in bottom

MWPS012338

ANTITY			DESCRIPTION	LOCATION	COMMENTS
1	Yes	✓	Electric Induction Furnace. Inductotherm Linemelt induction furnace is used to raise the temperature of the iron as received from the cupolas.	Cupola Area	Iron Temp. in 2500°-2550° out 2770°. Holding cap 15 tons. Avg. 100 tons per 8 hr. shift thru furnace
1	?	Yes	Iron Pouring area #4 Unit, Approximately ~~3600~~ 4500 sq. ft. & Casting cooling	#1 Foundry Building	~~Iron poured into Green Sand Molds~~
1	? No		Casting Cooling Area (Uncleaned). Approximately 900 sq. ft.	West of #1 Foundry Building between #2 Cleaning Shed & Carpenter Shop	
1			~~Heat Treat Furnace - excess air burners approximately 1,100,000 BTU/hr. (total) automatic temperature control. Two heat zones with air quench fans at discharge end~~ Listed as Fuel burning equipment.	~~West #1 Cleaning Shed~~	11 North American #4423-2 burners. 5 North American #4423-1 burners ~~Leeds & Northrup~~ Controls. Operating temperature 1750° maximum on presen castings.
10 (pprox.)	Yes	✓	Hand Torches - plant made 1/4" and 3/8" pipe w/shut off valve	Oil sand core room, N.W. end of #1 Foundry Building, #4 Unit core set area in #1 Foundry Building & Shell Core Building	Used to skin dry molds and to dry core wash on cores
2	No	✓	Bond Adders - plant made - Sliding drawer type	#4 Unit Green Sand Mullors	

MWPS012339

QUANTITY			DESCRIPTION	LOCATION	COMMENTS
1	No		Dust Collector - Pangborn No. 42D-84 Vertijet Dust Collector Wet Type. Type KO-15B Exhauster 1096 R.P.M. 150 H.P., 1800 RPM Motor FR 445T Cap 59,540 CFM @ 10 1/2" S.P.	#4 Unit Shakeout	Dust Collection for flask shakeout & for core shakeout
1	No		Flask Shake-out Hewitt Robins Style MF-11 Deck Size 8'x8'	#4 Unit North End #1 Foundry Building	
1	No		Core Shake-out, Simplicity, Deck Size 7'x8'	#4 Unit North End #1 Foundry Building	
1	No	✓	Paint Spray Area - Approximately 10' x 20' area ventilated by a 5 HP, 42" exhaust fan	Cement lining	
1	No	✓	Paint Spray Area ventilated by 3/4 HP, 48" fan	#2 Cleaning Shed	
1	Yes	✓	Paint Spray Booth - Binks Dynaprecipitor Water Wash Spray Booth with one Gould Water Pump Figure 3770 Size 3CS and one 3 HP, 36" exhaust fan	#1 Cleaning Shed	
1	Yes	✓	Cyclone - 15,000 CFM (Estimate)	Outside south end of Pattern Shop.	Serves (1) planer, (2) band saws, (1) disc sander, and joiners (2) (1) table sa (2) milling machines (5) outlets for floor sweepings in Pattern Shop.
1	No		Pick-off Conveyor	#9 Cooling Bldg.	Vented thru' roof and wall openings with fans
1	Yes	✓	Cyclone - 18,000 CFM (Estimate)	Outside east end of Carpenter Shop.	Serves (1) cut-off saw, (1) sander, (1) planer, (1) joine (2) band saws in Carpenter Shop.

MWPS012340

QUANTITY			DESCRIPTION	LOCATION	COMMENTS
1	~~No~~ yes		Cupola Bottom Drop	Outside east side of #1 Foundry Bldg.	Once per day.
1	Yes	✓	Beardsley & Piper, Model 1000, Gas-fired speed heater with Maxon Premix Blower. Gas inlet line is 1" dia. to Furnish 750 cu. ft./hr. at 8" W.G.	West end Shell Core Bldg.	Used for heating sand at sand coating area.

MWPS012341

CHATTANOOGA GENERAL FOUNDRY
FUEL BURNING EQUIPMENT

ANTITY			DESCRIPTION	LOCATION	COMMENTS
4	Yes	✓	50,000 BTU Infra-Red Heater (Gas Fired) (Perfection Schwank)	Maint. Area @ #9 Unit	
3	Yes	✓	" " " " "	Pattern Mounting @ #9 Unit	
5	Yes	✓	" " " " "	Core Setting Area @ #9 Unit	
2	Yes	✓	" " " " "	Maint. Area @ Shell Core Bldg.	
2	Yes	✓	" " " " "	Muller Area @ #9 Unit	
53	Yes	✓	" " " " "	#3 Cleaning Shed	
23	Yes	✓	" " " " "	#1 Cleaning Shed	
4	Yes	✓	" " " " "	Oil Sand Core Room	
24	Yes	✓	" " " " "	Machine Shop	
1	Yes	✓	" " " " "	Electric Shop	
2	Yes	✓	" " " " "	Sand Coating Area Shell Core Building	

MWPS012342

QUANTITY			DESCRIPTION	LOCATION	COMMENTS
1	Yes	✓	100,000 BTU Infra-Red Heater (Gas Fired) (Perfection Schwank)	#1 Cleaning Shed	
2	Yes	✓	" " " " "	Machine Shop	
6	Yes	✓	24,000 " " " "	Machine Shop	
7	Yes	✓	" " " " "	Cement Lining	
1	Yes	✓	" " " " "	Electric Shop	
1	Yes	✓	180,000 BTU Blower Unit Heater (Gas Fired) (Modine B225)	Oil Sand Core Room	
2	Yes	✓	140,000 " " " (Modine B175)	Oil Sand Core Room	
1	Yes	✓	" " " " (Modine B175)	Maint. Machine Shop	
1	Yes	✓	" " " " (Modine B175)	Welding Shop	
2	Yes	✓	180,000 " " " (Modine B225)	Maint. Garage	
1	Yes	✓	120,000 " " " (Moncrief U150)	Electric Shop	
2	Yes	✓	" " " " (Moncrief U150)	Cement Lining	
4	Yes	✓	180,000 " " " (Modine B225)	Cement Lining	

MWPS012343

ANTITY			DESCRIPTION	LOCATION	COMMENTS
10	Yes	✓	Shalco Model 360 Shell Core Machines, each requiring a gas volume of 1000 cu. ft./hr. for an output of 1,000,000 BTU/hr./machine	One machine is in South end #1 Foundry Building Nine machines are along North wall of Shell Core Building	
1	Yes	✓	R & J Shell Core Machine - Model 1220A with 1/2" dia. gas feed line	South wall of Shell Core Building	
1	Yes	✓	R & J Shell Core Machine - Model 1826 with 1/2" dia. gas feed line	South wall of Shell Core Building	
1	Yes	✓	R & J Shell Core Machine - Model 3644 with 1/2" dia. gas feed line	South wall of Shell Core Building	
6	Yes	✓	Shalco Model 180 Shell Core Machines, each requiring a gas volume of 400 cu. ft./hr. for an output of 400,000 BTU/hr./machine	Along South wall of Shell Core Building	
1	Yes	✓	R & J Shell Core Machine - Experimental Mandrel Type	Southeast end of Shell Core Building	
1			Listed as process equipment. ~~Beardsley & Piper, Model 1000, Gas Fired Speedheater with Maxon Premix Blower. Gas inlet line is 1" dia. to furnish 750 cu. ft./hr. at 8" W.C.~~	~~West end of Shell Core Building~~	~~Used for heating sand at sand coating system~~
1	Yes	✓	Viking Superior Gas Fired Boiler, Model 20-G-50, with a gas input of 2,075,000 BTU per hour	Employee's Bath House	
1	Yes	✓	Continental Gas Fired Automatic Boiler, with a gas requirement of 6,276 cu. ft./hr., and an output of 5,021,000 BTU/hr.	Powerhouse	

MWPS012344

UANTITY			DESCRIPTION	LOCATION	COMMENTS
4	Yes	✓	Core Ovens - Coleman Transtrack 25'x6'x7'-6" 1,500,000 BTU/hr. each	Oil Sand Core Room	Burners Hauck Mfg. Co. Type 783U 2500 cu.ft./hr. 2,500,00 BTU
3	Yes	✓	Core Ovens U. S. Pipe & Foundry Company Car Type Oven One 16x12x7'-10", one 16x12x9'-8", one 16x12x9'-8" (recirculating)	North end #1 Foundry Building	Burners Hauck Mfg. Co. Type 783U 2,500,000 BTU/hr. Recirculating Burners Hauck No. 81A 1,000,000 BTU/hr.
1	Yes	✓	Core Oven - Lanley Company 16'x14'x9'-8" SN3366 Max. Opp. Temp. 600° F. convection heating system - 2 burners	North end #1 Foundry Building	Burners, North America 130-B-57 1,500,00 each
3	Yes	✓	Ladle preheaters - plant made	Cupola area	Fixed location blower equipped est. 2,5000,000 BTU/hr. ea.
6	Yes	✓	Ladle preheaters - plant made	5--Cupola Area 1--#4 Unit	Portable hand torches Est. 2,500,00 BTU/hr. ea. Used on D.I. ladles & iron transfer trough
1	Yes	✓	Heat Treat Furnace - excess air burners approx. 1,100,000 Btuh (total) automatic temperature control. Two heat zones with air quench fans at discharge end.	West #1 Cleaning shed.	11-North American #4423-3 burners. 5-North American #4423-1 burners. Leeds & Northrup controls. Operating temperature 1750° maximum on present castings.

MWPS012345

2.24.81

Process weight Analysis
for
#9 Unit

Allowable Emission Rate

Permit Process weight — 460,000 lb/hr per permit # 3321-30300899-45I

Allowed Emission Rate from Schedule 1 : — 57 lb/hr

Allowed particulate concentration, Rule 26.12 (B) — 0.05 gr/dscfm

Process weight During testing (2.10.81)

Given - Sand - density = 0.07 lb/cu.in

metal - density = 0.26 lb/cu.in

Run #1 9:00 - 10:55 Am - no down time

Product :- 12 x 8 Tees @ 340 lb iron/flask
4 x 3 Tees
12½° Bend } 295 lb iron/flask

Iron weight : 144 x 340 = 48960
15 x 295 = 4425
159 — 53385 lb

Ave/flask = $\frac{53385}{159}$ = 335 lb/

add 25% for gates and risers

335.75 + .25(335.75) = 419.69 lb

SAND Weight:

419.69 lb iron/flask × 1 cu in / .26 lb iron = 1614.19 cu in of iron

1614.19 cu in. × 0.07 lb sand/cu in = 112.99 lb sand

3000 wt of flask
− 113 wt of sand taken up with iron.
2887 lb of sand per flask

Total weight:

2887 lb sand + 420 lb iron = 3307 lb/flask

Process weight:

$$\frac{3307 \text{ lb/flask} \times 159 \text{ flasks}}{1.92 \text{ hrs}} = 273{,}960 \text{ lb/hr}$$

Run #2 12:08 — 1:48 pm 2 mins. of hour time

Product: 16" Bell 400 lb iron/flask
Housing & 6" Bend 330 lb iron/flask

Iron weight:

47	× 400	=	18,800
32	× 330	=	10,560
79			29,360

Ave./flask = 29360 / 79 = 371.65 lb iron/flask

MWPS012347

add 25% for gates and risers

371.65 + .25(371.65) = 464.56 lb iron

Sand weight:

464.56 lb iron/flask × $\frac{\text{cu in}}{.26 \text{ lb iron}}$ = 1786.76 cu in. of iron

1786.76 × 0.07 $\frac{\text{lb sand}}{\text{cu in}}$ = 125 lb sand

3000 wt. of flask
−125 wt. of sand taken up with iron

2875 lb. of sand per flask

Total weight:

2875 lb sand + 371.65 lb iron = 3246.65 lb/flask

Process weight:

$\frac{3247 \text{ lb/flask} \times 79}{1.67 \text{ hrs}}$ = 153,600 lb/hr

Run # 3 3:00 pm – 4:38 – no downtime

Product: Flangs – 148 lb iron / flask
6" Tee – 255 lb iron / flask
Hub – 624 lb iron / flask

Iron weight:

54	×	148	=	7992
25	×	255	=	6375
23	×	624	=	14352
102				28719 lb

Ave. / flask = $\frac{28719}{102}$ = 281.56 lb/flask

MWPS012348

add 25% for gates and risers

281.56 + .25(281.56) = 351.95 lb iron

Sand weight:

351.95 lb iron × $\frac{\text{cu in}}{.26 \text{ lb iron}}$ = 1353.65 cu in

1353.65 × 0.07 $\frac{\text{lb sand}}{\text{cu in}}$ = 94.75 lb sand

3000 lb wt. of flask
94.75 lb wt of sand displaced by iron
2905.25 lb of sand per flask

total weight:

2905.25 lb sand + 351.55 lb iron = 3257.2 lb/flask

Process weight:

$\frac{3257 \text{ lb/flask} \times 102}{1.63 \text{ hr}}$ = 203,812 lb/hr

Average Process weight for the (3) runs =

273,860
153,600
203 812
631 272 ÷ 3 = 210,424 lb/hr

Process wt.

440,000 6/80 inventory –

448,920 11/79 42 C permit 8 11/80

460,500 8/78 45 I

9:00 TO 10:55 RUN # 1

12 X 8 TEES @ 340 LB 1 PER FLASK

4 X 3 TEES @ 75 LB & 12" 22½° BEND 220 LB 295 LB PER FLASK

66	@	340	=	22,440
15	@	295	=	4425
78	@	340	=	26,520
159				53,385 LB = 335.75 LB AVG.

335.75 + 83.94 (25% FOR GATES & RISERS) = 419.69 LB PER FLASK

$\frac{419.69}{.26}$ = 1614.19 CU. IN

.26 lb/cu in

Sand

1614.19 CUIN @ .07 LB/CUIN = 112.99 — used ≈ 120 lb/cu ft. d density for sand wet packed

3000.00
− 112.99
2887.01 SAND
+ 419.69 IRON

Some cores are solid
isocure solid

3300.70 LB/FLASK AVG. × 159 = 273,836 lb/hr.
1.92 hr

RUN # 2

12:08 TO 1:48

16" USAFLEX BELL 400 LB 1 PER FLASK 47 FLASK

DIFF HOUSING & 6" BEND 330 LB PER FLASK 32 FLASK

47	@	400 LB	=	18800
32	@	330	=	10560
79	@			29,360 = 371.65 LB/FLASK AVG.

371.65 × 92.91 (25% GATES & RISERS) 464.56 = 1786.76 CUIN

1786.76 × .07 = 125 LB

3000
− 125
2875 SAND
+ 371.65 IRON

60
40
120
60

2 mins of downtime during the period

3246.65 LB/FLASK × 79 = 153584
1.67

MWPS012351

RECEIVED
FEB 12 1981
ENGINEERING DEPT.
REFERRED

Reasard

RUN # 3

3:00 TO 4:38

FLANGES	148 LB/FLASK	54 FLASK
6" TEE	255 LB/FLASK	25 FLASK
HUB	624 LB/FLASK	23 FLASK

148 X 54 = 7992
255 X 25 = 6375
624 X 23 = 14 352
102 28,719 = 281.56 LB/FLASK

281.56 + 70.39 (25% GATES & RISERS) = 351.95 LB AVG.

= 1353.65 CU.IN.
1353.65 X .07 = 94.75

3000
− 94.75
2905.25 SAND
+ 351.95 IRON
3257.20 AVG. LB/FLASK X 1.02 = 203,825 lb/hr
1.63 hrs

8:18 TO 8:28 } DOWN TIME
11:13 TO 12:10 }

CHATTANOOGA VALVE PLANT
PROCESS EQUIPMENT

QUANTITY			DESCRIPTION	LOCATION	COMMENTS
1	Yes	✓	Water Wash Paint Spray Booth, Binks #30-771, with 5 H.P. motor	South end at Valve Assembly Area	Used to exhaust overspray of blac coating compound applied to valve bodies
1	Yes	✓	Gas Torch used for drying valves, 3/8" dia. tubing	South end of Foundry Bldg.	Used only occasio ally
1	Yes	✓	Pangborn, Bag House Type, Dust Collector, Model No. 1500, Type CN, with motor sheaved for 4100 CFM	Outside North end of Foundry Building	Collects dust frc Pangborn Rotoblas unit, V.I.P. 140 Furnace, and Shel sand tank
1	Yes	✓	Pangborn Model GN IM Rotoblast	South of Pouring Run	
1	Yes	✓	Bronze Electric Melting Furnace, Inductotherm Corp., V.I.P., 140 KW, Coreless	North end of Foundry Bldg.	
1	Yes	✓	Shell Sand Storage Tank (Coated Sand)	North End of Foundry Bldg.	Sand pneumatical conveyed from out side into tank
2	Yes No		Exhaust fans over Bronze Pouring Run 1-Propellair vaneaxial fan, #BV30-7K16-0-7, with 10 H.P. motor, rated 16,000 CFM @ 2" S.P. 1-Barry centrifugal fan, #BVB-270, rated at 12,000 CFM @ 2" S.P.	Both fans are on top of roof above pouring run at North end of Foundry Bldg.	

MWPS012353

:hattanooga Valve Plant
'rocess Equipment
'age 2

QUANTITY			DESCRIPTION	LOCATION	COMMENTS
1	Yes	✓	Torit, Dust Collector, Model 84, S/N 83543 (Baghouse)	North central area of Foundry Bldg.	Serves hand grinde hood, Cut-off saw, and double-head grinder.
1	Yes	✓	Hooded Hand Grinder	North central area of Foundry Bldg.	Exhausted to dust collector.
1	Yes	✓	Cut-off Saw	North central area of Foundry Bldg.	Exhausted to dust collector.
1	Yes	✓	Double-head grinder	North central area of Foundry Bldg.	Exhausted to dust collector.
1	Yes	✓	Torit, Dust Collector, Model 84, S/N 86446	South area of Foundry Bldg.	Serves two double-head grinders.
2	Yes	✓	Double-head grinders	South area of Foundry Bldg.	Exhausted to dust collector.

MWPS012354

CHATTANOOGA VALVE PLANT
FUEL BURNING EQUIPMENT

QUANTITY			DESCRIPTION	LOCATION	COMMENTS
1	Yes	✓	Day & Night Mfg. Co. Water Heater, Model 100-210JSB-2A, with gas input of 250,000 BTU/hr.	Employee's Bath House Old Mueller Building	
1	Yes	✓	Day & Night Mfg. Co. Water Heater, Size 420, with gas input of 300,000 BTU/hr.	Employee's Bath House Old Mueller Building	
6	Yes	✓	Trane Gas Space Heater Model G230, input 230,000 BTU/hr.	Main Foundry Building	
6	Yes	✓	Bryant Gas Space Heater, Model 225-341, input 225,000 BTU/hr. output 180,000 BTU/hr.	Main Foundry Building	
1	Yes	✓	Bryant Gas Space Heater, Model 100-341, input 100,000 BTU/hr., output 80,000 BTU/hr.	Employee's Restroom Main Foundry Building	
1	Yes	✓	Modine Gas Space Heater, Model 222 CAN, input 220,000 BTU/hr.	Main Foundry Building	
1	Yes	✓	Modine Gas Space Heater, Model 6225A, input 225,000 BTU/hr.	Main Foundry Building	
1	Yes	✓	Modine Gas Space Heater, Model G1658, input 165,000 BTU/hr.	Coffee Shop	
1	Yes	✓	Reznor Gas Space Heater, input 125,000 BTU/hr., output 100,000 BTU/hr.	Maintenance Area	
2	Yes	✓	Bryant Gas Space Heater, Model 225-341, input 225,000 BTU/hr., output 180,000 BTU/hr.	Storage & Shipping Area	
1	Yes	✓	Trane Gas Space Heater, Model G100R, input 100,000 BTU/hr.	Shipping Office	

MWPS012355

ıattanooga Valve Plant
ıel Burning Equipment
ıge 2

UANTITY			DESCRIPTION	LOCATION	COMMENTS
2	Yes	✓	Trane Gas Space Heater, Model G165, input 165,000 BTU/hr.	Shipping & Storage	
2	Yes	✓	Trane Gas Space Heater, Model G230, input 230,000 BTU/hr.	Shipping & Storage	
1	Yes	✓	Modine Gas Space Heater, Model C135A, input 135,000 BTU/hr.	G.O. Engineering Office	
1	Yes	✓	Bryant Gas Space Heater, Type BH, Unit #65A85, input 65,000 BTU/hr.	G.O. Engineering Office	
1	Yes	✓	Trane Gas Space Heater, Model GPA12A, input 125,000 BTU/hr.	Wash & Locker Building	
1	Yes	✓	Modine Gas Space Heater, Model G75A, input 65,000 BTU/hr.	Wash & Locker Building	
2	Yes	✓	Bryant Gas Space Heater, Model ?, input 100,000 BTU/hr. output 80,000 BTU/hr.	Wash & Locker Building	Estimated input & output - no data available
1	Yes	✓	Bryant Gas Space Heater, 85 A 85, input 85,000 BTU/hr., output 68,000 BTU/hr.	Guardshack	
1	Yes	✓	Trane Gas Space Heater, Model G50, input 50,000 BTU/hr., Output 40,000 BTU/hr.	Guardshack	
11	Yes	✓	Trane Gas Space Heater, Model G230, input 230,000 BTU/hr.	Old Mueller Building used for Bolt Storage	All of these may not be used.

MWPS012356

:hattanooga Valve Plant
'uel Burning Equipment
'age 3

)UANTITY			DESCRIPTION	LOCATION	COMMENTS
1	Yes	✓	Dependable, Model 200 SA, Shell Core Machine, maximum gas required 174 cu. ft./hr.	North end Foundry Bldg.	
1	Yes	✓	Shalco, Model DSM-3, Twin Shell Mold Machine, maximum (total) gas required 1600 cu. ft./hr.	North end Foundry Bldg.	
1	Yes	✓	Personnel Dept. Classified Records Incinerator	Outside North end of Foundry Bldg.	Very small. Infrequently used.

MWPS012357

BC: Messrs. R. N. Voigt
R. B. Wilson
D. L. Saltsman, Jr.

October 13, 1970

Mr. H. L. Parr
Chief Engineer
Air Pollution Control Bureau
Air Quality Control Region #32
Room 201, City Hall Annex
Chattanooga, Tennessee 37402

Dear Sir:

In your undated letters received in August and September of 1970, you requested a listing of all existing equipment and processes that may be sources of air pollution, also existing fuel-burning and existing control equipment.

Attached are Equipment Registration pages 1 thru 10 for the General Foundry at 2701 Chestnut Street and Registration Forms pages 1 thru 3 for the Valve Plant at 2501 Chestnut Street which list all the equipment requested.

Very truly yours,

Carl A. Johnson

Carl A. Johnson
Plant Manager

CAJ/gb

Attachments - 2

Types of Contaminants

A	x	E	x
B	x	F	
C	x	G	
D	x	O	

EQUIPMENT REGISTRATION FORM FOR

CHATTANOOGA-HAMILTON COUNTY AIR POLLUTION CONTROL BUREAU

FITTINGS

Activity Classification

1		5	1	9		13	
2		6		10		14	
3		7		11		15	
4		8		12		16	

CONTROL EQUIP.

Firm Name U. S. Pipe & Foundry Company Phone (615) 265-1623 Grid No.

Address 2701 Chestnut Street (Street) Chattanooga (City) Hamilton (County) 37401 (Zip)

Legal Owner Jim Walter Corporation Corp. x Part. Indiv.

Nature of Business Gray Iron Foundry Responsible Person Mr. C. A. Johnson Title Plant Manager

List of All Equipment and Processes That May Be Sources of Air Pollution

	Item	Descriptive—General usage Name of Equipment—System or Process including Manufacturer's Name and Model No.	Approximate Location On Premises	Inspection Date	Permit Status	Reinspection Date	Comments
2	1	1 - Baghouse, Pangborn C-90-CM (converted) 11,220 CFM	north side -				Used for Item 2.
	2	1 - Blast Cleaning Table, Pangborn #12'LK Rotoblast	#2 shed #2 shed				
2	3	3 - Baghouse, Pangborn (two 8,250 CFM ea. C-90-CM)	west side -				Used for Item 4.
	4	(one 12,600 CFM C-120-CM) 3 - Blast Barrels, Pangborn #34 GN-M Rotoblast Barrels	#3 shed #3 shed				
2	5	1 - Bag House, Arrestall 1200, 1,500 CFM, Amer. Air Filter	north side - shell core bldg.				Dust collection - Item 6.
	6	1 - Sand and resin scales for coated sand system					
2	7	1 - Silo vent filter baghouse, Danco MHS-BVF-49, 392 sq. ft. bag area	top of sand silo at shell core bg.				
2	8	1 - Baghouse, Pangborn #408 CH, 19,000 CFM	North side - #1 shed				Used for Items 9 & 10
	9	1 - Blast Cleaning Table, Pangborn #8' LK-1 Rotoblast	east end - #1 shed				
	10	1 - Core shake-out, Simplicity 6'x8'	east end - #1 shed				
3	11	2 - Roto-clone Type D, Size 24, 15,000 cfm, Amer. Air Filter	north side - #2 cleaning shed				Used for Items 12 & 13.
	12	4 - Grinding Booths	#2 cleaning shed				
	13	1 - Sand muller	Demmler area				
3	14	1 - Roto-clone, Type D, Size 20, 10,600 cfm, Amer. Air Filter	North side #2 cleaning shed				Used for Item 15

MWPS012359

Types of Contaminants

A		E	
B		F	
C		G	
D		O	

EQUIPMENT REGISTRATION FORM FOR

CHATTANOOGA-HAMILTON COUNTY AIR POLLUTION CONTROL BUREAU

Page 2 F

Activity Classification

1		5		9		13	
2		6		10		14	
3		7		11		15	
4		8		12		16	

CONTROL EQUIP.

Firm Name U. S. Pipe and Foundry Company Phone _____ Grid No. _____

Address _____
Street City County Zip

Legal Owner _____ Corp. _____ Part. _____ Indiv. _____

Nature of Business _____ Responsible Person _____ Title _____

List of All Equipment and Processes That May Be Sources of Air Pollution

	Item	Descriptive—General usage Name of Equipment—System or Process including Manufacturer's Name and Model No.	Approximate Location On Premises	Inspection Date	Permit Status	Reinspection Date	Comments
	15	2 - Grinding Booths	#2 Cleaning shed				
3	16	1 - Roto-clone, Type D, Size 12, 3000 CFM, Amer. Air Filter	North side #2 Cleaning shed				Used for Item 17
	17	1 - Swing Grinder	#2 Cleaning shed				
3	18	3 - Rotoclone, Type D, Size 24, 15,000 CFM, Amer. Air Filter	West Side - #3 Cleaning shed				Used for Items 19, 20 and 21
	19	4 - Grinding Booths	#3 cleaning shed				
	20	1 - Swing Grinder	#3 cleaning shed				
	21	3 - Hoods over belts	#3 cleaning shed				
3	22	3 - Roto-Clone, Type D, Size 24, 15,000 CFM, Amer. Air Filter	West Side - #3 cleaning shed				Used for Items 23, 24, 25 & 26
	23	9 - Grinding Booths	#3 cleaning shed				
	24	1 - Stationary grinder	#3 cleaning shed				
	25	2 - Swing grinders	#3 cleaning shed				
	26	3 - Hoods over belts	#3 cleaning shed				
3	27	3 - Roto-clone, Type D, Size 24, 15,000 CFM, Amer. Air Filter	West Side - #3 cleaning shed				Used for Items 28, 29 & 30
	28	10 - Grinding Booths	#3 Cleaning Shed				

MWPS012360

Types of Contaminants

A		E	
B		F	
C		G	
D		O	

EQUIPMENT REGISTRATION FORM FOR

CHATTANOOGA-HAMILTON COUNTY AIR POLLUTION CONTROL BUREAU

F

Activity Classification

1		5		9		13	
2		6		10		14	
3		7		11		15	
4		8		12		16	

CONTROL EQUIP.

Firm Name U. S. Pipe and Foundry Company Phone _____ Grid No. _____

Address _____ Street City County Zip

Legal Owner _____ Corp. _____ Part. _____ Indiv. _____

Nature of Business _____ Responsible Person _____ Title _____

List of All Equipment and Processes That May Be Sources of Air Pollution

	Item	Descriptive—General usage Name of Equipment—System or Process including Manufacturer's Name and Model No.	Approximate Location On Premises	Inspection Date	Permit Status	Reinspection Date	Comments
	29	2 - Swing Grinder	#3 cleaning shed				
	30	1 - Stationary Grinder	#3 cleaning shed				
3	31	2 - Roto-clone, Type D, Size 24, 15,000 CFM Amer. Air Filter	North side #1 Cleaning shed				Used for Items 32 & 33
	32	9 - Grinding Booths	#1 cleaning shed				
	33	5 - Stationary Grinders	#1 cleaning shed				
3	34	1 - Roto-clone, Type D, Size 24, 15,000 CFM, Amer. Air Filter	North side #1 cleaning shed				Used for Item 35
	35	2 - Swing Grinders	#1 cleaning shed				
3	36	1 - Roto-clone, Type D, Size 10, 2,600 CFM, Amer. Air Filter	south of machine shop doorway				Used for Item 37
	37	3 - Stationary Grinding Stands	Machine shop tool room				
4	38	1 - Size 445 American Centrifugal Fan with 100 HP motor for C. B. Schneible Co. #129 F21Bj Multi-Wash Dust Collector Total Air handled - 39,700 CFM	Outside south-west side of #1 foundry bldg.				Used for Items 35, 36 & 37.
	39	2 - Beardsley & Piper 100B Speedmullers	west of #9 Unit				Connected to Schneible dust collector
	40	1 - Herman Pneumatic Flask Shakeout	#9 Unit, south end				Connected to Schneible dust collector
	41	1 - Link Belt Sand Return System	#9 Unit, west side				Connected to Schneible dust collector

MWPS012361

Types of Contaminants

A		E	
B		F	
C		G	
D		O	

EQUIPMENT REGISTRATION FORM FOR

CHATTANOOGA-HAMILTON COUNTY AIR POLLUTION CONTROL BUREAU

Page 4 F

Activity Classification

1		5		9		13	
2		6		10		14	
3		7		11		15	
4		8		12		16	

CONTROL EQUIP.

Firm Name U. S. Pipe and Foundry Company Phone _____ Grid No. _____

Address _____
Street City County Zip

Legal Owner _____ Corp. _____ Part. _____ Indiv. _____

Nature of Business _____ Responsible Person _____ Title _____

List of All Equipment and Processes That May Be Sources of Air Pollution

	Item	Descriptive—General usage Name of Equipment—System or Process including Manufacturer's Name and Model No.	Approximate Location On Premises	Inspection Date	Permit Status	Reinspection Date	Comments
3	42	1 - Fine-Saver Cyclone with 1,300 CFM exhaust fan & 1-1/2 HP motor	west end - shell core bldg.				collects fines at upper part of sand bin and re-mixes them at a lower leve
4	43	1 - Paint spray booth - Binks Dynaprecipitor Water Wash Spray booth with one Gould Water Pump Figure 3770, Size 3Cs and one 3HP, 36" exhaust fan	#1 cleaning shed				
3	44	1 - Cyclone - 15,000 CFM (estimate)	outside south end pattern shop				Used for Items 45-51.
	45	1 - Planer	Pattern Shop				
	46	2 - Band Saws	Pattern Shop				
	47	1 - Disc Sander	Pattern Shop				
	48	2 - Jointers	Pattern Shop				
	49	2 - Wood Milling Machines	Pattern Shop				
	50	5 - Outlets for Floor Sweepings	Pattern Shop				
	51	1 - Table Saw	Pattern Shop				
3	52	1 - Cyclone - 18,000 CFM (estimate)	outside east end Carpenter Shop				Used for Items 53-57
	53	1 - Cut-off saw	Carpenter Shop				
	[illegible]	[illegible]	Carpenter Shop				

MWPS012362

Types of Contaminants

A		E	
B		F	
C		G	
D		O	

EQUIPMENT REGISTRATION FORM FOR

CHATTANOOGA-HAMILTON COUNTY AIR POLLUTION CONTROL BUREAU

Page 5 F

Activity Classification

1		5		9		13	
2		6		10		14	
3		7		11		15	
4		8		12		16	

CONTROL EQUIP.

Firm Name _____ Phone _____ Grid No. _____

Address _____
Street City County Zip

Legal Owner _____ Corp. _____ Part. _____ Indiv. _____

Nature of Business _____ Responsible Person _____ Title _____

List of All Equipment and Processes That May Be Sources of Air Pollution

	Item	Descriptive—General usage Name of Equipment—System or Process including Manufacturer's Name and Model No.	Approximate Location On Premises	Inspection Date	Permit Status	Reinspection Date	Comments
	55	1 - Planer	Carpenter Shop				
	56	1 - Jointer	Carpenter Shop				
	57	2 - Band Saws	Carpenter Shop				
	58	2 - 90" I.D. Steel Shell Cupolas w/60" I.D. refractory lining	South End No. 1				Cupola bottom is dropped once each day
		coke consumption: Approximately 15 tons per 8 hours Blower Output: 10,400 CFM	Foundry Bldg.				
	59	1 - Beardsley & Piper Solvent Drying Unit, Blowing Type, with	west end of shell				
		7-1/2 HP, 1800 RPM motor	core building				
	60	1 - Beardsley & Piper Cooling & Conveying Unit for prepared	west end of				
		shell core sand, with 50 HP motor & 15,000 CFM cyclone collector	shell core bldg.				
	61	Mag-Coke process for making nodular iron	Cupola area, #1 foundry bldg.				

MWPS012363

Types of Contaminants

A		E	
B		F	
C		G	
D		O	

EQUIPMENT REGISTRATION FORM FOR

CHATTANOOGA-HAMILTON COUNTY AIR POLLUTION CONTROL BUREAU

Activity Classification

1		5		9		13	
2		6		10		14	
3		7		11		15	
4		8		12		16	

CONTROL EQUIP.

Firm Name U. S. Pipe and Foundry Company Phone _____ Grid No. _____

Address _____
Street City County Zip

Legal Owner _____ Corp. _____ Part. _____ Indiv. _____

Nature of Business _____ Responsible Person _____ Title _____

List of All Equipment and Processes That May Be Sources of Air Pollution

Item	Descriptive—General usage Name of Equipment—System or Process including Manufacturer's Name and Model No.	Approximate Location On Premises	Inspection Date	Permit Status	Reinspection Date	Comments
62	Electric induction furnace. Inductotherm Linemelt induction furnace is used to raise temperature of iron as received from cupolas	Cupola area				Iron Temp. in 2500°-2550° out 2770°. Holding cap. 15 tons. Avg. 100 tons per 8-hr. shift through furnace.
63	1 - Iron pouring & casting cooling area #4 unit, approximately 4500 square feet	#1 Foundry Building				
64	10 (approx.) mold & core drying torches - plant made 1/4" and 3/8" pipe w/shut-off valve	oil sand core room, N.W. end of #1 Foundry Bldg., #4 Unit				
		core set area in #1 Foundry Bldg.				
		& shell core bldg.				
65	1 - Beardsley & Piper, Model 1000, gas-fired speed heater with Maxon Premix Blower. Gas inlet line is 1" dia. to furnish 750 cu.ft./hour at 8" W.G.	West end shell core bldg.				Used for heating sand at sand coating area.
66	4 - 50,000 BTU Infra-Red Heater (Gas-fired) (Perfection Schwank)	Maint. area @ #9 Unit				
67	3 - " " " " " " " " "	Pattern Mounting @ #9 Unit				
68	5 - " " " " " " " " "	Core Setting area @ #9 Unit				
69	2 - " " " " " " " " "	Maint. area at shell core bldg				

MWPS012364

Types of Contaminants

A		E	
B		F	
C		G	
D		O	

EQUIPMENT REGISTRATION FORM FOR

CHATTANOOGA-HAMILTON COUNTY AIR POLLUTION CONTROL BUREAU

Page 7 F

Activity Classification

1		5		9		13	
2		6		10		14	
3		7		11		15	
4		8		12		16	

CONTROL EQUIP.

Firm Name U. S. Pipe & Foundry Company Phone _____ Grid No. _____

Address _____
Street City County Zip

Legal Owner _____ Corp. _____ Part. _____ Indiv. _____

Nature of Business _____ Responsible Person _____ Title _____

List of All Equipment and Processes That May Be Sources of Air Pollution

Item	Descriptive—General usage Name of Equipment—System or Process including Manufacturer's Name and Model No.	Approximate Location On Premises	Inspection Date	Permit Status	Reinspection Date	Comments
70	2 - 50,000 BTU Infra-Red Heater (Gas-fired)(Perfection Schwank)	Muller area @ #9 Unit				
71	53 - " " " " " " " " "	#3 Cleaning shed				
72	23 - " " " " " " " " "	#1 Cleaning shed				
73	4 - " " " " " " " " "	Oil sand core room				
74	24 - " " " " " " " " "	Machine Shop				
75	1 - " " " " " " " " "	Electric shop				
76	2 - " " " " " " " " "	sand coating area - shell				
77	1 - 100,000 BTU Infra-Red Heater (Gas-fired) (Perfection Sch.)	core bldg. #1 cleaning shed				
78	2 - " " " " " " " " "	Machine Shop				
79	6 - 24,000 " " " " " " " "	Machine Shop				
80	7 - " " " " " " " " "	Cement Lining				
81	1 - " " " " " " " " "	Electric Shop				
82	1 - 180-000 BTU Blower Unit Heater (Gas-fired)(Modine B225)	oil sand core room				
83	2 - 140,000 " " " " " " (Modine B175)	oil sand core room				

MWPS012365

Types of Contaminants

A		E	
B		F	
C		G	
D		O	

EQUIPMENT REGISTRATION FORM FOR

CHATTANOOGA-HAMILTON COUNTY AIR POLLUTION CONTROL BUREAU

F

Activity Classification

1		5		9		13	
2		6		10		14	
3		7		11		15	
4		8		12		16	

CONTROL EQUIP.

Firm Name U. S. Pipe & Foundry Company Phone _____ Grid No. _____

Address _____
Street City County Zip

Legal Owner _____ Corp. _____ Part. _____ Indiv. _____

Nature of Business _____ Responsible Person _____ Title _____

List of All Equipment and Processes That May Be Sources of Air Pollution

	Item	Descriptive—General usage Name of Equipment—System or Process including Manufacturer's Name and Model No.	Approximate Location On Premises	Inspection Date	Permit Status	Reinspection Date	Comments
	84	1 - 140,000 BTU Blower Unit Heater (Gas-fired) (Modine B175)	Maint. Machine Shop				
	85	1 - " " " " " " " " "	Welding Shop				
	86	2 - 180,000 " " " " " " " B225	Maint. Garage				
	87	1 - 120,000 " " " " " (Moncrief U150)	Electric Shop				
	88	2 - " " " " " " " " "	Cement Lining				
	89	4 - 180,000 " " " " " (Modine B225)	Cement Lining				
	90	10 - Shalco Model 360 Shell Core Machines, each requiring a gas volume of 1000 cu. ft./hr. for an output of 1,000,000 BTU/hr./machine	1 machine is in south end #1 Foundry Bldg. 9 machines are along north wall of shell core bg.				
	91	1 - R & J Shell Core Machine - Model 1220A with 1/2" dia. gas feed line	south wall of shell core bldg.				
	92	1 - R & J Shell Core Machine - Model 1826 with 1/2" dia. gas feed line	" " "				
	93	1 - R & J Shell Core Machine - Model 3644 with 1/2" dia. gas feed line	" " "				

MWPS012366

Types of Contaminants

A		E	
B		F	
C		G	
D		O	

EQUIPMENT REGISTRATION FORM FOR

CHATTANOOGA-HAMILTON COUNTY AIR POLLUTION CONTROL BUREAU

Activity Classification

1		5		9		13	
2		6		10		14	
3		7		11		15	
4		8		12		16	

CONTROL EQUIP.

Firm Name U. S. Pipe & Foundry Company Phone _____ Grid No. _____

Address _____
Street City County Zip

Legal Owner _____ Corp. _____ Part. _____ Indiv. _____

Nature of Business _____ Responsible Person _____ Title _____

List of All Equipment and Processes That May Be Sources of Air Pollution

Item	Descriptive—General usage Name of Equipment—System or Process including Manufacturer's Name and Model No.	Approximate Location On Premises	Inspection Date	Permit Status	Reinspection Date	Comments
94	6 - Shalco Model 180 Shell Core Machines, each requiring a gas volume of 400 cu.ft/hr. for output of 400,000 BTU/hr/mach.	along south wall of shell core bldg.				
95	1 - R & J Shell Core Machine - Experimental Mandrel Type	southeast end of shell core bldg.				
96	1 - Viking Superior Gas Fired Boiler, Model 20-G-50, with a gas input of 2,075,000 BTU per hour	employees' bath house				
97	1 - Continental gas-fired automatic boiler, with a gas requirement of 6,276 cu. ft./hr., and an output of 5,021,000 BTU/hr.	Powerhouse				
98	4 - Core ovens - gas-fired, Coleman Transtrack 25'x6'x7'-6", 1,500,000 BTU/hr. each. Burners, Hanck Mfg. Co., Type 783U, 2500 cu.ft./hr.	oil sand core room				
99	3 - Core ovens, gas-fired, U. S. Pipe & Foundry Company car type oven - one 16x12x7'-10", one 16x12x9'-8", one 16x12x9'-8" (recirculating) Burners, Hanck Mfg. Co., Type 783U, 2500 cu.ft./hr. recirculating burners, Hanck No. 781A, 1,000 cu.ft./hr.	north end - #1 Foundry Building				
100	1 - Core oven - gas-fired, Lanley Company 16'x14'x9'-8", SN 3366, Max. opp. temp. 600°F. convection heating system - 2 burners, North Amer. 130-B-57, 1500 cu.ft./hr. each	north end - #1 Foundry Building				

MWPS012367

Types of Contaminants

A		E	
B		F	
C		G	
D		O	

EQUIPMENT REGISTRATION FORM FOR

CHATTANOOGA-HAMILTON COUNTY AIR POLLUTION CONTROL BUREAU

 F

Activity Classification

1		5		9		13	
2		6		10		14	
3		7		11		15	
4		8		12		16	

CONTROL EQUIP.

Firm Name U. S. Pipe and Foundry Company Phone _____ Grid No. _____

Address _____
Street City County Zip

Legal Owner _____ Corp. _____ Part. _____ Indiv. _____

Nature of Business _____ Responsible Person _____ Title _____

List of All Equipment and Processes That May Be Sources of Air Pollution

Item	Descriptive—General usage Name of Equipment—System or Process including Manufacturer's Name and Model No.	Approximate Location On Premises	Inspection Date	Permit Status	Reinspection Date	Comments
101	3 - Ladle preheaters - gas-fired, plant made. Estimated capacity = 2500 cu.ft./hr.	cupola area				
102	6 - Ladle preheaters - gas-fired, plant made. Estimated capacity = 2500 cu.ft./hr.	5-cupola area				
103	1 - Heat treat furnace - excess air burners approx. 1,100,000 Btu-h (total) automatic temperature control. Two heat zones with air quench. Fans at discharge end. Burners (11) North American, #4423-3; (5) North American #4423-1.	1-#4 Unit West #1 Cleaning shed				

MWPS012368

Types of Contaminants

A		E	
B	X	F	
C	X	G	
D		O	

EQUIPMENT REGISTRATION FORM FOR

CHATTANOOGA-HAMILTON COUNTY AIR POLLUTION CONTROL BUREAU

VALVE

Activity Classification

1		5	3	9		13	
2		6		10		14	
3		7		11		15	
4		8		12		16	

CONTROL EQUIP.

Firm Name U. S. Pipe & Foundry Company Phone (615) 265-1623 Grid No. _____

Address 2501 Chestnut Street (Street) Chattanooga (City) Hamilton (County) 37401 (Zip)

Legal Owner Jim Walter Corporation Corp. X Part. _____ Indiv. _____

Nature of Business Brass Foundry & Valve Assembly Responsible Person Mr. C. A. Johnson Title Plant Manager

List of All Equipment and Processes That May Be Sources of Air Pollution

	Item	Descriptive—General usage Name of Equipment—System or Process including Manufacturer's Name and Model No.	Approximate Location On Premises	Inspection Date	Permit Status	Reinspection Date	Comments
4	1	1 - Water wash paint spray booth, Binks #30-771 with 5-HP motor	south end at valve assy. area				
	2	1 - Gas torch used for drying valves, 3/8" dia. tubing	south end of foundry bldg.				
2	3	1 - Pangborn, Baghouse-type dust collector, Model No. 1500, Type CN, with motor sheaved for 4100 CFM	outside north end of foundry bldg.				Used for Items 4-6.
	4	1 - Pangborn Model GN IM Rotoblast	south of pouring run				
	5	1 - Bronze electric melting furnace, Inductotherm Corp., V.I.P., 140 KW, coreless	north end of foundry bldg.				
	6	1 - Shell sand storage tank (coated sand)	" "				sand pneumatically conveyed from outside into tank
2	7	1 - Torit, dust collector, Model 84, SN 83543 (baghouse)	north central area of foundry bldg.				Used for Items 8-10.
	8	1 - Hooded Hand Grinder	" "				
	9	1 - Cut-off Saw	" "				
	10	1 -Double-head grinder	" "				
2	11	1 - Torit, Dust collector, Model 84, SN 86446	south area of foundry bldg.				
	12	2 - Double-head grinders	" "				
	13	1 - Day & Night Mfg. Co. Water Heater, Model 100-210JSB-2A, with gas input of 250,000 BTU/hr.	employee's bath house - old Mueller Bldg.				

MWPS012369

Types of Contaminants

A		E	
B		F	
C		G	
D		O	

EQUIPMENT REGISTRATION FORM FOR

CHATTANOOGA-HAMILTON COUNTY AIR POLLUTION CONTROL BUREAU

Page 2 ✓

Activity Classification

1		5		9		13	
2		6		10		14	
3		7		11		15	
4		8		12		16	

CONTROL EQUIP.

Firm Name U. S. Pipe and Foundry Company Phone _____ Grid No. _____

Address _____
Street City County Zip

Legal Owner _____ Corp. _____ Part. _____ Indiv. _____

Nature of Business _____ Responsible Person _____ Title _____

List of All Equipment and Processes That May Be Sources of Air Pollution

Item	Descriptive—General usage Name of Equipment—System or Process including Manufacturer's Name and Model No.	Approximate Location On Premises	Inspection Date	Permit Status	Reinspection Date	Comments
14	1 - Day & Night Mfg. Co. Water Heater, Size 420, with gas input of 300,000 BTU/hr.	employee's bath house - old				
15	6 - Trane Gas Space Heater Model G230, input 230,000 BTU/hr.	Mueller Bldg. main foundry				
16	6 - Bryant gas space heater, Model 225-341, input 225,000 BTU/hr. - output 180,000 BTU/hr.	bldg. main foundry				
17	1 - Bryant gas space heater, Model 100-341, input 100,000 BTU/hr., output 80,000 BTU/hr.	bldg. employees' rest room - main foundry bldg.				
18	1 - Modine gas space heater, Model 222 CAN, input 220,000 BTU/hr.	main foundry				
19	1 - Mondine gas space heater, Model 6225A, input 225,000 BTU/hr.	bldg. " "				
20	1 - Modine gas space heater, Model G1658, input 165,000 BTU/hr.	Coffee Shop				
21	1 - Reznor gas space heater, input 125,000 BTU/hr., output 100,000 BTU/hr.	Maintenance Area				
22	2 - Bryant gas space heater, Model 225-341, input 225,000 BTU/hr., output 180,000 BTU/hr.	Storage & Shipping area				
23	1 - Trane Gas space heater, Model G100R, input 100,000 BTU/hr.	Shipping Office				
24	2 - Trane gas space heater, Model G165, input 165,000 BTU/hr.	Shipping & Storage				
25	2 - Trane gas space heater, Model G230, input 230,000 BTU/hr.	"				
26	1 - Modine gas space heater, Model G135A, input 135,000 BTU/hr.	G. O. Eng. Off.				

MWPS012370

Types of Contaminants

A		E	
B		F	
C		G	
D		O	

EQUIPMENT REGISTRATION FORM FOR

CHATTANOOGA-HAMILTON COUNTY AIR POLLUTION CONTROL BUREAU

V

Activity Classification

1		5		9		13	
2		6		10		14	
3		7		11		15	
4		8		12		16	

CONTROL EQUIP.

Firm Name U. S. Pipe & Foundry Company Phone _____ Grid No. _____

Address _____
Street City County Zip

Legal Owner _____ Corp. _____ Part. _____ Indiv. _____

Nature of Business _____ Responsible Person _____ Title _____

List of All Equipment and Processes That May Be Sources of Air Pollution

Item	Descriptive—General usage Name of Equipment—System or Process including Manufacturer's Name and Model No.	Approximate Location On Premises	Inspection Date	Permit Status	Reinspection Date	Comments
27	1 - Bryant gas space heater, Type BH, Unit #65A85, input 65,000 BTU/hr.	C.O. Eng. off.				
28	1 - Trane gas space heater, Model GPA12A, input 125,000 BTU/hr.	wash & locker bldg.				
29	1 - Modine gas space heater, Model G75A, input 65,000 BTU/hr.	" "				
30	2 - Bryant gas space heater, input 100,000 BTU/hr. output 80,000 BTU/hr. (estimated)	" "				
31	1 - Bryant gas space heater, 85 A 85, input 85,000 BTU/hr. output 68,000 BTU/hr.	Guardshack				
32	1 - Trane gas space heater, Model G50, input 50,000 BTU/hr., output 40,000 BTU/hr.	Guardshack				
33	11 - Trane gas space heater, Model G230, input 230,000 BTU/hr.	old Mueller Bldg. used for bolt storage				
34	1 - Dependable, Model 200SA, shell core machine, maximum gas required 174 cu.ft./hr.	north end - foundry bldg.				
35	1 - Shalco, Model DSM-3, Twin Shell Mold Machine, maximum (total) gas required 1600 cu.ft./hr.	" " outside north end foundry bldg.				
36	1 - Personnel Dept. Classified Records Incinerator					very small, infrequently used.

MWPS012371

STD 362 C

UNITED STATES PIPE AND FOUNDRY COMPANY – SPEED LETTER

ENGINEERING DEPT. REFERRED

TO Mr. Don Wallace ADDRESS General Office

SUBJECT: PERMITS - CHATTANOOGA-HAMILTON COUNTY AIR POLLUTION CONTROL BUREAU

Dear Don,

Enclosed is a copy of our letter and the permits to the A.P.B. for your information and file.

Jim Smallwood (gjp)

FROM Jim Smallwood ADDRESS Chattanooga V. & F. Plant DATE 6/2/76

REPLY: TO _____ ADDRESS _____

FROM _____ DATE _____

COPY FOR PERSON ADDRESSED

MWPS012372

UNITED STATES PIPE AND FOUNDRY COMPANY

Chattanooga Valve & Fittings Plant

P.O. DRAWER 311

CHATTANOOGA, TENNESSEE 37401

June 1, 1976

Mr. Herbert L. Parr
Chattanooga-Hamilton County
Air Pollution Control Bureau
3511 Rossville Boulevard
Chattanooga, Tennessee 37407

Dear Mr. Parr:

Attached is a tabulation showing baseline emissions for the Chattanooga Valve & Fittings Plant located at 2701 Chestnut Street. A tabulation of emissions after construction of the proposed cupola system is also attached, showing a net reduction of 36 percent of total emissions from the facility.

These reductions will be accomplished through use of more efficient control equipment serving two existing sources and by installation of the best available control system for the proposed cupola.

These tabulations have been discussed with Mr. Bob Bond of your staff, and were completed in accordance with procedures consistent with the proposed revision of the Chattanooga-Hamilton County Air Pollution Control Ordinance.

Also attached is the submittal for a permit to construct the proposed iron cupola.

We sincerely appreciate your cooperation and that of Mr. Bond in regard to our permit application and if there is any additional information we can supply, we will be happy to do so.

Very truly yours,

UNITED STATES PIPE AND FOUNDRY COMPANY

James L. Smallwood,
Plant Engineer

JLS:gjp

Attachments

FORM E001

BASIC APPLICATION FOR EQUIPMENT / AIR POLLUTION PERMIT*

1. Name of Company U. S. PIPE & FOUNDRY COMPANY 2. SIC Code: _____

3. Company Official to Contact Jim Moore 4. Phone No: 265-4611

5. Mailing Address for Line 3: 2701 Chestnut St., Chattanooga, TN. 37408
   Street City State Zip Code

6. Company Address
   (if different from line 5): _____
   Street City Zip Code

7. Application for:

   [X] Installation Permit

   [ ] Certificate of Operation (Initial Application)
   Temp. Operating Permit No.: _____

   [ ] Temporary Operating Permit
   Instal. Permit No.: _____

   [ ] Certificate of Operation (Renewal)
   Certificate of Operation _____

8. Type of equipment for which application is made:

   [X] Process Equipment (Submit Form E010; [ ] Already Submitted)

   [ ] Fuel Burning Equipment (Submit Form E011; [ ] Already Submitted)

   [ ] Incineration Equipment (Submit Form E012; [ ] Already Submitted)

   [ ] Odor or Miscellaneous (Specify) _____ (Submit Form E013; [ ] Already Submitted)

   [ ] Minor Pollution Source—less than 1000 lbs / year and 10 lbs / day total uncontrolled contaminant emissions (Submit Form E014; [ ] Already Submitted)

9. The following forms are filed with this application: E010, E102, E106, E109

10. Equipment Name: Melting Facilities

11. If Application is for a Temporary Operating Permit or Certificate of Operation (Initial or Renewal) are there any changes since previous application in the equipment or operational procedures which might:

    A) Increase, decrease, or alter process materials, fuel, refuse type, etc.
    [ ] YES [ ] NO

    B) Increase, decrease, or alter emissions or emission points
    [ ] YES [ ] NO

    (If either answer is YES, new forms E010, E011, E012, E013, or E014 and associated forms must be filed with this application.)

* Form must be completely filled out before it is acceptable.

12. Process Weight, lb/hr, (Item 7 on Form E010), Incineration Rate, lbs/hr, (Item 7 on Form E012), or Fuel Burning Rate, 1000 BTU/hr, (Item 5C on Form E011):

57800 LB/HR.

This is to certify that I am familiar with operations concerning this equipment and the information provided on this application is true and complete to the best of my knowledge:

Mail To:
CHATTANOOGA-HAMILTON COUNTY
AIR POLLUTION CONTROL BUREAU
3511 Rossville Boulevard
Chattanooga, Tennessee 37407

Company Official: J. Hallwood
Signature

Title: Plant Engineer

Date: June 1, 1976

DO NOT WRITE BELOW THIS LINE

_____ Permit Fee

_____ Inspection Approval Date Inspected: _____

_____ Reviewed by Supervisor

_____ Check Received. Amount _____ Check Number _____

_____ Entered into tape file and state keypunch form filed

_____ Registered in Suspense File

SPECIAL CONDITIONS IMPOSED: _____

Expiration Date: _____

Permit Number: _____

Approved By: _____
Director

Date: _____

MWPS012375

FORM: E010

PROCESS EQUIPMENT APPLICATION*

1. Name of Company (as shown on Line 1, Form E001): U. S. PIPE & FOUNDRY CO.

2. Equipment Name (as shown on Line 10, Form E001): Melting Facilities

3. UTM Coordinates of Company (i.e. source): EW _____ NS _____

4. Type of Process: Foundry Melting - Cupola

5. Major Raw Materials Processed: Pig iron, scrap, steel, coke & stone

6. Date of installation, initial start-up, or alteration (such that potential emissions were increased) of equipment or device for which permit is applied for:

- [ ] Before October 14, 1969 - Schedule 2
- [ ] After October 14, 1969, but before January 1, 1973 - Schedule 1
- [X] After January 1, 1973 - Schedule 3

7. Process Weight (lbs/hr): 57,800 LB/HR

(This is the total weight of all materials introduced into the process - for a cyclical or batch operation divide the total process weight per cycle or batch by the number of hours per cycle or batch).

8. Control Equipment Data:

- [ ] Emissions Uncontrolled
- [X] Baghouse (File Form E102)
- [ ] Wet Scrubbing Device (File Form E103)
- [ ] Electrostatic Precipitator (File Form E104)
- [ ] Cyclone or Rotoclone (File Form E105)
- [X] Other - Specify After Burner (File Form ~~EXXX~~) E109

9. Control Equipment Efficiency for each pollutant emitted by this equipment. (from appropriate Form E102, E103, E104, E105, E107, or enter zeros if A is checked in Item 8).

		% EFFICIENCY		SPECIFY POLLUTANT	% EFFICIENCY
A	Particulates	99+	D	CO	93.8
B	SO_x	N/A	E		
C	NO_x	N/A	F		

*Must be accompanied by Form E001.

MWPS012376

10. Allowable particulate emissions (lbs in any single hour)*: 28.6 lbs/hr

(This is determined from Table 2 in the local air pollution ordinance/law or from Appendix A in the revised permit manual. Consult Item 6 above to determine proper column in Table 2 and Item 7 for proper process weight).

11. Actual Particulate Emissions (lbs/hr):

Uncontrolled Emissions: 425 lbs/hr

Actual Emissions: _____ (or fill in next line)

(1 - 0.01 x Control Efficiency from Item 9A) x Uncontrolled Emissions = 4.25 lbs/hr.

☐ The values shown in this item were determined by actual stack test (submit copy of stack test report with full details; ☐ Already submitted).

☒ The values shown in this item were estimated (File Form E106).

12. Are actual particulate emissions (Item 11) less than allowed particulate emissions (Item 10); ☒ YES ☐ NO

(If NO is checked, then more control equipment will be required before equipment can be operated - Consult the Bureau).

13. Allowable Sulfur Oxide Emissions (as ppm by volume SO_2).

N/A

(Circle applicable emission limitation, see Item 6 for proper schedule)

	Before July 1, 1974	After July 1, 1974
Schedule 1	500	500
Schedule 2	2000	500
Schedule 3	500	500

14. Actual Sulfur Oxide Emissions (ppm by volume as SO_2).

N/A

Specify air required for process (SCFM): _____

Uncontrolled Emissions: _____ ppm

Actual Emissions: _____ (or fill in next line)

(1 - 0.01 x Control Efficiency from Item 9B) x Uncontrolled Emissions = _____ ppm.

☐ The values shown in this item were determined by actual stack test (Submit copy of stack test report with full details; ☐ Already submitted).

☐ The values shown in this item were estimated (File Form E106).

15. Are actual SO_x emissions (Item 14) less than allowed SO_x emissions (Item 13)

☐ YES ☐ NO

N/A

(If NO is checked, then more control equipment will be required before equipment can be operated - Consult the Bureau).

*Note that equipment must also meet visible emissions code.

16. Allowable Nitrogen Oxide Emissions (lbs/hr as NO_2):

N/A

1. Nitric Acid Plants emission limitation (Submit E101 - allowable emissions will be in Item 7 on this form): _____

2. All other process equipment emission limitations: No requirement

17. Nitrogen Oxide Emissions (lbs/hr as NO_2):

Uncontrolled Emissions: _____ lbs/hr

N/A

Actual Emissions: _____ (or fill in next line)
(1 - 0.01 x Control Efficiency from Line 9C) x Uncontrolled Emissions = _____ lbs/hr.

☐ The values shown in this item were determined by actual stack test (Submit a copy of stack test report with full details; ☐ Already Submitted).

☐ The values shown in this item were estimated (File Form E106).

18. Are actual Nitrogen Oxide Emissions (from Item 17) less than allowed Nitrogen Oxide Emissions (from Item 16):

N/A

☐ YES ☐ NO

(If answer is NO, additional control equipment must be installed before equipment can be operated).

19. Other air contaminant emissions - specify:

☐ The values shown were determined by actual stack test (Submit a copy of stack test with full details; ☐ Already Submitted)

☒ The values shown were estimated (file Form E106 for each pollutant shown)

SEE FORM E109

TYPE	LBS/HR
CO	3625

20. Those emissions indicated in Item 19:

☐ May at times under normal operating conditions cause odors, property damage, health effects, eye irritations or other nuisance outside of plant property.

☒ Will not under normal operating conditions cause any environmental damage or create nuisances outside of plant property.

☐ Do not know.

21. **Emission Point Data:**

Stack height above ground (ft):	59'
Ground elevation above sea level at stack base (ft):	666±
Stack Diameter (ft):	NA
Uncorrected gas exit velocity (ft/sec):	1.99
Gas exit temperature (°C):	310°

☐ Emissions from this equipment is fugitive in character and preceeding data is not applicable.

22. **Operational times during normal operating conditions:**

PERIODS	TOTAL HOURS
Fall	1500
Winter	1500
Spring	1500
Summer	1500
Daily (during average day)	24
Weekly (during average week)	120

This is to certify that I am familiar with operations concerning this equipment and the information provided on this application is true and complete to the best of my knowledge.

Company Official: _____ Signature

Title: Plant Engineer

Date: June 1, 1976

DO NOT WRITE BELOW THIS LINE

_____ Engineer Approval

_____ Entered into tape file and state keypunch form filed

This form corresponds to permit number: _____

Special Notations: _____

FORM: E102

BAGHOUSE

Air Pollution Control Equipment Data

1. Name of Company (as shown on Line 1, Form E001): U. S. PIPE & FOUNDRY CO.

2. Equipment Name (as shown on Line 10, Form E001): Melting Facilities

3. Volume of Gas discarged to atmosphere at stack or baghouse conditions
A: 83,200 CFM. Volume of Gas discharged to atomsphere at standard conditions: 48,500 SCFM.

4. Cloth area of Baghouse B: 51,030 Sq.Ft.
Air to cloth ratio: (A/B, ~~item 3~~ divided by item 4)
83,200 CFM divided by 44,226 Sq.Ft. = 1.9 Ft./Min.

The recommended baghouse air to cloth ratio (range) is:
Conventional Baghouse - Dust: 1.5 ft/min to 3 ft min
Fumes: 1 ft/min to 2 ft min
Reverse Jet Baghouse - 6 ft/min to 16 ft min

5. Pressure Drop across baghouse:
Stated by manufacturer: 8 in H_2O
Measured (Actual): _____ in H_2O
Calculated*: (K factor) x (Air to cloth ratio)
(_____) x (_____ ft/min) = _____ in H_2O

Recommended Pressure Drop: Minimu 1.5 in H_2O. Maximum 8 in H_2O.
Measured and/or calculated pressure drop fall outside of recommended range:
[X] NO [ ] YES (If YES contact the Bureau).

*K factor determined from Appendix C in Revised Permit Manual.

6. Bag Material: Type E Fiberglass
Maximum bag operating temperature: 550 °F.
Normal bag operating temperature: 450 °F.
Recommended bag operating temperature*: 550 Max. °F.

The recommended temperature is less than maximum and/or normal operating temperature: [X] NO [ ] YES (If YES contact the Bureau)

*Obtain from Appendix C of Revised Permit Manual.

7. Manufacturer's stated efficiency: 99+ %

Required efficiency:

$$\frac{(\text{Uncontrolled Emissions})^{\#} - (\text{Allowable Emissions})^{\#\#}}{(\text{Uncontrolled Emissions})^{\#}} \times 100 = \%\text{Efficiency Reg.}$$

$$\frac{(425 \text{ lb/hr}) - (38.6 \text{ lb/hr})}{(425 \text{ lb/hr})} \times 100 = 93.3\ \%\ \text{EFF.REG}$$

#Obtain from Item 11 Form E010, Item 11 Form E011 or Item 10 Form E012.
##Obtain from Item 10 Form E010, Item 10 Form E011 or Item 8 Form E012.

8. Incidate which of the following are components of baghouse:

A	Recording instruments for flow rates		YES	X	NO
B	Recording instruments for gas temperature	X	YES		NO
C	Recording instruments for baghouse temperature	X	YES		NO
D	Recording instruments for dew point level		YES	X	NO
E	Extra compartment for cleaning baghouse	X	YES		NO
F	Burners to bring system to operating temperature	X	YES		NO
G	Automatic cleaning device	X	YES		NO
H	Extra Compartment For Maintenance	X	YES		

9. Fan Data:

TYPE FAN		TYPE BLADE					
Centrifugal	X	Forward Curve		Backward Curve		Tub-Axial	
Axial		Vane-Axial		Propellor		Straight	X

Capacity: Maximum _____ CFM at _____ °F
Actual 83,200 CFM at 450 °F
Static Pressure: 15 in H_2O
Motor H.P.: 300 HP

10. Baghouse operation: Intermittent [ ] Continuous [X]

Dirty Gas Inlet: [ ] Top [X] Bottom [ ] Tangential

Clean Gas Outlet: [ ] Top [X] Side. Outlet Height above ground: 59 ft.

Baghouse Shape: [X] Rectangular [ ] Cubical [ ] Cylinrical [ ]

Baghouse Size (Volume): 52,050 CuFt

Dust Type(s): Fly Ash, Metallic Fumes

11. Bag Cleaning Method:

FABRIC FLEXING [X]		REVERSE AIR CLEANING [ ]
Mechanical shaking and rapping	[X]	Reverse Jet [ ]
Manual Cleaning	[ ]	Reverse Flow [ ]
Sonic Cleaning	[ ]	
Collapse Cleaning	[ ]	
Pulse Cleaning	[ ]	

12. Filter Configuration: [ ] Pannels [X] Tubes [ ] Bags

Filter Length: 19½ Ft

Number of Compartments: 15 (13 operating)

Number of Filters per Compartment: 60

13. Dust Size Distribution in Microns, μ: (Give % by Weight.)

SIZE	0 - 5μ	5 - 10μ	10 - 20μ	20 - 44μ	Greater than 44μ
%	43 %	18 %	13 %	8 %	18 %

% Moisture in Gas Stream: ____ %

(Supply the information requested in this box if available).

14. Does Baghouse contain precleaning equipment: [ ] YES [X] NO

If YES, what type: _____ . Fill out applicable form for precleaning equipment indicated.

15. Manufacturer of Baghouse: U. S. PIPE & FOUNDRY CO.

Model Number : _____ Cost of Baghouse: _____

Dust Disposal Method: Buried on company dump

16. Submit Manufacturers Test Data and Specifications.

N/A Submitted with Application [ ] Already Submitted [ ]

MWPS012382

This is to certify that I am familiar with operations concerning this equipment and the information provided on this application is true and complete to the best of my knowledge.

Company Official: _____
Signature

Title: Plant Engineer

Date: June 1, 1976

DO NOT WRITE BELOW THIS LINE

_____ Engineer Approval

_____ Entered into tape file and state keypunch from file

This form corresponds to permit number: _____

Special Notations: _____

E106

POLLUTION ESTIMATION FORM

1. Name of Company: U. S. PIPE & FOUNDRY COMPANY
(as shown on Line 1, Form E001)

2. Equipment Name: Melting Facilities
(as shown on Line 10, Form E001)

3. Pollutant for which estimation is to be made: Particulates

4. Pollutant Emission Factor:

17	LB/TON MET. CHARGED
Value	Units

(For example, in the case of an uncontrolled gray iron foundry cupola, the carbon monoxide emission factor is:

145	lbs emitted/ton of metal charged into cupola
Value	Units

Source of Emission Factor: AP-42

(In the above example the source is: Compilation of Air Pollutant Emission Factors, U. S. Environmental Protection Agency, Office of Air Programs, Research Triangle Park, North Carolina, February 1972, Office of Air Programs Publication No. AP-42, Page 7-13). If some type of material balance was used, give brief details).

5. Pollution Emission Rate = 17 (Value) LBS./TON MET (Units) (Emission Factor from 4) X 25 (Value) TONS/HR. (Units) (Appropriate Process Weight)

= Pollution Emission Rate = 425 (Value) LBS/HR. (Units)

(In the example considered so far, the appropriate process weight would be the amount of metal charged per unit time. This may or may not be the same as the process weight shown on the blue or yellow forms. In the case being considered the process weight shown on the yellow or blue forms would be the metal plus coke used in the cupola. The process weight needed in this item would be the metal charged into the cupola per unit time. Assuming that this is 500 tons/day, the carbon monoxide emission rate would be (145 lbs/ton) x (500 tons/day) = 72,500 lbs/day.

6. Pollution Emission Rate (lbs emitted/hour): 425
(Convert emission rate shown in Item 5 to pounds emitted/hour - this is before control. If the cupola indicated in Items 4 and 5 were operated 24 hours per day, then the pollution emission rate in lbs/hr would be 3021 lbs/hr - this is the value to be used on the blue form). For now continuous emission systems rates must be converted to maximum amount if any single hour eg., if an an operation emits for 30 minutes and does not emit again for three hours, emission in lbs/hr is not emissions in 30 minutes divided by three hours, but emissions in 30 minutes divided by one hour.

This is to certify that I am familiar with operations concerning this equipment and the information provided on this application is true and complete to the best of my knowledge.

Company Official: _____
Signature

Title: Plant Engineer

Date: June 1, 1976

MASS	GRAMS	KILOGRAMS	OUNCES	POUNDS	GRAINS	TONS (SHORT)
Grams	1	0.001	3.53×10^{-2}	2.21×10^{-3}	15.43	1.102×10^{-6}
Kilograms	1000	1	35.27	2.205	15432.0	1.102×10^{-3}
Ounces (avoir)	28.35	0.02835	1	0.0625	437.5	3.125×10^{-5}
Pounds (avoir)	453.6	0.4536	16.0	1	7000	5×10^{-4}
Grains	0.0648	6.48×10^{-5}	2.286×10^{-3}	1.429×10^{-4}	1	7.142×10^{-8}
Tons (short)	9.072×10^{5}	907.19	3.2×10^{4}		1.4×10^{7}	1

TIME	SECOND	MINUTE	HOUR	DAY	WEEK	MONTH	YEAR
Second	1	0.0167	2.78×10^{-4}	1.16×10^{-5}	1.65×10^{-6}	3.82×10^{-7}	3.17×10^{-8}
Minute	60	1	0.01667	6.94×10^{-4}	9.97×10^{-5}	2.28×10^{-5}	1.9×10^{-6}
Hour	3600	60	1	0.04167	5.95×10^{-3}	1.37×10^{-3}	1.14×10^{-4}
Day	8.64×10^{4}	1440	24	1	0.143	0.0329	0.00274
Week	6.05×10^{5}	1.003×10^{4}	168	7	1	0.230	0.0191
Month	2.62×10^{6}	4.378×10^{4}	729.6	30.4	4.34	1	0.0833
Year	3.15×10^{7}	5.26×10^{5}	8760	365	52.1	12	1

E706

POLLUTION ESTIMATION FORM

1. Name of Company: U. S. PIPE & FOUNDRY COMPANY
(as shown on Line 1, Form E001)

2. Equipment Name: Melting Facilities
(as shown on Line 10, Form E001)

3. Pollutant for which estimation is to be made: CO

4. Pollutant Emission Factor:

145 (Value) Lb./Ton Met Charged (Units)

(For example, in the case of an uncontrolled gray iron foundry cupola, the carbon monoxide emission factor is:

145 (Value) lbs emitted/ton of metal charged into cupola (Units)

Source of Emission Factor: AP-42

(In the above example the source is: Compilation of Air Pollutant Emission Factors, U. S. Environmental Protection Agency, Office of Air Programs, Research Triangle Park, North Carolina, February 1972, Office of Air Programs Publication No. AP-42, Page 7-13). If some type of material balance was used, give brief details).

5. Pollution Emission Rate = 145 (Value) Tons/Met Charge (Units) X 25 (Value) Tons/Hr. (Units)
(Emission Factor from 4) (Appropriate Process Weight)

= Pollution Emission Rate = 3625 (Value) Lbs/Hr. (Units)

(In the example considered so far, the appropriate process weight would be the amount of metal charged per unit time. This may or may not be the same as the process weight shown on the blue or yellow forms. In the case being considered the process weight shown on the yellow or blue forms would be the metal plus coke used in the cupola. The process weight needed in this item would be the metal charged into the cupola per unit time. Assuming that this is 500 tons/day, the carbon monoxide emission rate would be (145 lbs/ton) x (500 tons/day) = 72,500 lbs/day.

6. Pollution Emission Rate (lbs emitted/hour): 3625
(Convert emission rate shown in Item 5 to pounds emitted/hour - this is before control. If the cupola indicated in Items 4 and 5 were operated 24 hours per day, then the pollution emission rate in lbs/hr would be 3021 lbs/hr - this is the value to be used on the blue form). For now continuous emission systems rates must be converted to maximum amount if any single hour eg., if an an operation emits for 30 minutes and does not emit again for three hours, emission in lbs/hr is not emissions in 30 minutes divided by three hours, but emissions in 30 minutes divided by one hour.

DO NOT WRITE BELOW THIS LINE

_____ Engineer Approval

_____ Entered into tape file and state keypunch from file

This form corresponds to permit number: _____

Special Notations: _____

_____

_____

_____

_____

MWPS012387

This is to certify that I am familiar with operations concerning this equipment and the information provided on this application is true and complete to the best of my knowledge.

Company Official: _____
Signature

Title: Plant Engineer

Date: June 1, 1976

MASS	GRAMS	KILOGRAMS	OUNCES	POUNDS	GRAINS	TONS (SHORT)
Grams	1	0.001	3.53×10^{-2}	2.21×10^{-3}	15.43	1.102×10^{-6}
Kilograms	1000	1	35.27	2.205	15432.0	1.102×10^{-3}
Ounces (avoir)	28.35	0.02835	1	0.0625	437.5	3.125×10^{-5}
Pounds (avoir)	453.6	0.4536	16.0	1	7000	5×10^{-4}
Grains	0.0648	6.48×10^{-5}	2.286×10^{-3}	1.429×10^{-4}	1	7.142×10^{-8}
Tons (short)	9.072×10^{5}	907.19	3.2×10^{4}		1.4×10^{7}	1

TIME	SECOND	MINUTE	HOUR	DAY	WEEK	MONTH	YEAR
Second	1	0.0167	2.78×10^{-4}	1.16×10^{-5}	1.65×10^{-6}	3.82×10^{-7}	3.17×10^{-8}
Minute	60	1	0.01667	6.94×10^{-4}	9.97×10^{-5}	2.28×10^{-5}	1.9×10^{-6}
Hour	3600	60	1	0.04167	5.95×10^{-3}	1.37×10^{-3}	1.14×10^{-4}
Day	8.64×10^{4}	1440	24	1	0.143	0.0329	0.00274
Week	6.05×10^{5}	1.003×10^{4}	168	7	1	0.230	0.0191
Month	2.62×10^{6}	4.378×10^{4}	729.6	30.4	4.34	1	0.0833
Year	3.15×10^{7}	5.26×10^{5}	8760	365	52.1	12	1

DO NOT WRITE BELOW THIS LINE

_____ Engineer Approval

_____ Entered into tape file and state keypunch from file

This form corresponds to permit number: _____

Special Notations: _____

MWPS012389

FORM: E109

AFTERBURNERS
Thermal, Direct Flame & Catalyst

1. Name of Company (as shown on Line 1 of Form E001): _____

U. S. PIPE & FOUNDRY COMPANY

2. Type of Process to be served by afterburner: _____

Foundry Melting (Cupola)

3. Name and Model Number of afterburner equipment and manufacturer:

U. S. Pipe Design

PROCESS DATA

4. List all air contaminants to be removed and give the concentration of each contaminant:

	Air Contaminant	Concentration (ppm or percent by volume at standard conditions)
A	CO	10 - 15% (by vol.)
B	Oil Vapor	Unknown
C		
D		
E		

5. List the conditions of the gas stream to be treated:

	MAX	MIN	AVG	
Temperature	2000	70	750	(°F)
Pressure	ATM.	ATM.	ATM.	(in. Hg)
Moisture				(% by vol.)
Gas Volume	156,345	33,684	76,901	(CFM)
Gas Velocity in Duct	3,553	766	1,748	(FPM)

This data has been determined by: ___ Source Test

[X] Calculations [ ] Other (Specify) _____

AFTERBURNER DATA

6. Check One (1):

[X] Direct Flame [ ] Catalyst [ ] Boiler [ ] Thermal

BURNER DATA

7. Check All Applicable:

[X] Gas Fired [ ] Oil Fired [ ] Nozzle-Mixing Premixing

[X] Multi-Port [ ] Mixing-Plate [ ] Other (specify)

8. List operating temperatures of afterburner:

	MAX	MIN	AVG	
Temperature	2000	1200	1450	(°F)

9. List retention time for afterburner:

	MAX	MIN	AVG	
Time	-	-	0.6	(Sec.)

10. List exit gas temperature:

	MAX	MIN	AVG	
Temperature	1450	1200	1450	(°F)

11. Will heat recovery unit be used?

[X] Yes [ ] No

If yes, state the type: Esher, Inc.

12. If unit is catalytic type, describe catalyst and substrate:

N/A

State estimated catalyst life _____ hrs.

13. Calculate theoretical efficiency as shown:

$$\text{efficiency \%} = \frac{(\text{lbs contaminants/hr-in}) - (\text{lbs contaminants/hr out})}{(\text{lbs contaminants/hr-in})} \times 100$$

$$\frac{(3625) - (225)}{(3625 \text{ LB/HR})} \times 100 = 93.8\%$$

14. Describe temperature sensory devices and their operating parameters:

Thermocouple controlled water sprays to drop out heavy particulates and to reduce gas temperature to approximately 1450°F at entry to heat exchanger. Second set of thermocouples in upper stack tied into recorders and alarm system. Third set of thermocouples after final quench to control gas temperature to baghouse @ 450°F.

15. List auxillary fuel usage and identify type:

MAX	MIN	AVG	
333 CFM	0	*	cu. ft./hr. or gal./hr.

* Used only at start up or relief, self sustaining after reaching operating temperature.

Type: Natural Gas

16. Submit drawings of all equipment with each application.

This is to certify that I am familiar with operations concerning this equipment, and the information on this application is true and complete to the best of my knowledge.

Company Official: [signature]
Signature

Title: Plant Engineer

Date: June 1, 1976

DO NOT WRITE BELOW THIS LINE

_____ Engineer Approval

_____ Entered into tape file and state keypunch form filed

_____ Supervisor Approval

This form corresponds to permit number: _____

Special Notations: _____

MWPS012392