1074270 - R8 SDMS

Technical Memorandum
Former Screening Plant Well Installation

Libby, Montana Asbestos Project

Contract No.: DTRT57-05-D-30109
Task Order No. 8

Prepared for:

U.S. Department of Transportation
Research and Special Programs Administration
John A. Volpe National Transportation Systems Center
Environmental Engineering Division, DTS-33
55 Broadway, Kendall Square
Cambridge, Massachusetts 02142

Prepared by:

CDM Federal Programs Corporation
1331 17th Street, Suite 1200
Denver, Colorado 80202

Technical Memorandum
Former Screening Plant Well Installation

Libby, Montana Asbestos Project

Contract No.: DTRT57-05-D-30109
Task Order No. 8

Prepared by: _____ Date: 6/28/06
Andy Horn
Well Installation Task Manager

Reviewed by: _____ Date: 6/28/06
Mike Smith
Technical Advisor

Approved by: _____ Date: _____
Mike Cirian
EPA Region VIII Remedial Project Manager

Approved by: _____ Date: _____
Michelle Heimgartner
Volpe Center Project Technical Lead

Contents

Section 1 Introduction

1.1 Objectives 1-1
1.2 Project Schedule 1-1

Section 2 Site Background

2.1 Site Location and Description 2-1

Section 3 Well Installation, Testing, and Sampling

3.1 Well Drilling and Installation 3-1
3.2 Well Development 3-2
3.3 Well Pumping Test Results 3-2
3.4 Water Sampling and Analysis Results 3-3
3.4.1 Field Parameter and Field Laboratory Asbestos Results .. 3-3
3.4.2 Drinking Water Analysis Results 3-4
3.5 Well Abandonment 3-4
3.6 Well Piping Installation 3-4
3.7 State of Montana Well Documentation 3-5
3.8 Quality Assurance/Quality Control Samples 3-5
3.8.1 Field Parameter Quality Control 3-5
3.8.2 Trip Blank 3-6
3.8.3 Laboratory Quality Control 3-
3.8.3.1 Matrix Spike/Matrix Spike Duplicate 3-
3.8.3.2 Laboratory Control Samples 3-
3.8.3.3 Laboratory Duplicates 3-
3.8.3.4 Method Blanks 3-
3.8.3.5 Surrogate Spikes 3-

Appendices

Appendix A Water Quality Field Parameter Log
Appendix B Asbestos Sampling Laboratory Results
Appendix C Laboratory Data Reports
Appendix D State of Montana Well Filings
Appendix E Field Notes
Appendix F Photographs

List of Figures

Figure 1 As-Built Schematic of Well
Figure 2 Observed Drawdown, Step-Drawdown Aquifer Performance Test
Figure 3 Pump Discharge Rate, Step-Drawdown Aquifer Performance Test
Figure 4 Observed Drawdown, Constant Rate Aquifer Performance Test
Figure 5 Pump Discharge Rate, Constant Rate Aquifer Performance Test
Figure 6 As-Built Schematic of Well Piping Tie-in

Section 1
Introduction

This document serves as the Technical Memorandum (TM) for the installation of a replacement water well at the former Screening Plant at the Libby Montana Superfund site (Site). This TM outlines the support that CDM Federal Programs Corporation (CDM) provided to the John A. Volpe National Transportation Systems Center (Volpe) for the above-mentioned task, and documents the well installation, water quality testing results, well construction details, and provides the well documentation required by the State of Montana.

1.1 Objectives

The ultimate objective of this activity was to install a drinking water well to replace a well damaged during response activities. This TM documents the activities necessary to install and test the well.

1.2 Project Schedule

The field work described herein began on Saturday, April 29, 2006 and was completed on May 16, 2006.

Section 2
Site Background

During removal of vermiculite containing soil at the former screening plant, the existing potable water well was damaged. The integrity of the well's surface casing was compromised and sounding indicated that the well was obstructed at a depth of 41 feet below ground surface (bgs), possibly by soil falling into the well. A water sample collected from the well indicated the presence of asbestos in the well and a replacement well (PW-01) was drilled in the spring of 2003. During drilling of the replacement well, asbestos was detected in aquifer materials and also in water produced from the alluvial aquifer in which the original well was completed. In addition, drilling difficulties resulted in abandonment of a borehole and well materials designated as PW-02. Well PW-01 was eventually completed in the underlying bedrock aquifer in an attempt to avoid water containing asbestos. Subsequent water sampling indicated that Well PW-01 was completed in an aquifer containing mineralized thermal waters with a fluoride concentration above the maximum contaminant level (MCL). Due to the unsuitability of the water produced from Well PW-01 as a potable water supply, EPA determined that another well would be drilled and completed in the alluvial aquifer.

2.1 Site Location and Description

The well location is approximately 5 miles north of Libby, Montana at 5000 Highway 37 North in the vicinity of the NW 1/4 of the NE 1/4, Section 32, T31N, R30E. The drilling site is located on private property. The well was drilled approximately 60 feet north of the Site owner's original well.

Section 3
Well Installation, Testing, and Sampling

In this section, the well installation, testing, and sampling are described. Specific sampling methods and procedures were performed according to the Field Work Plan CDM's Technical Standard Operating Procedures (TSOPs) as required. The well installation was conducted by O'Keefe Drilling of Butte, Montana and monitored by a CDM hydrogeologist. The following narrative describes the well installation, development, hydraulic testing, and water quality sampling.

In general the well drilling and installation followed the field work plan (CDM 2006); however, field conditions required the deviations from the work plan as described below. Field parameters are presented in Appendix A and asbestos sampling laboratory results are presented in Appendix B. Laboratory reports are presented in Appendix C, State of Montana well filings are presented in Appendix D, and field logs are presented in Appendix E. Photographs from the well installation activities are presented in Appendix F.

3.1 Well Drilling and Installation

On Saturday, April 29, 2006, representatives of MCS Environmental, O'Keefe Drilling, and CDM mobilized to the Site and a borehole was advanced to 75 feet bgs using air rotary methods while advancing a 10-inch drive casing. The field work plan specified that the groundwater would be field tested for the presence of fluoride or specific conductance at various depths to guide well screen placement to avoid thermal mineralized waters that had been observed at a depth of approximately 90 feet bgs. The fluoride field assay was not available at the time of the drilling and specific conductance, an indicator of dissolved mineral concentration, was used. Specific conductance testing of produced water did not indicate presence of mineralized waters in the target well completion zone. Specific conductance measurements are provided in Appendix A. All drill cuttings were contained in a plastic-lined trailer; water produced from the borehole was pumped to the Kootenai River.

On Sunday, April 30, the well was installed. Due to the presence of flowing sands that had been encountered at 67 feet bgs and that entered the drive casing between the time the bore hole was cleaned out and installation of the well screen, the well was set to a depth of 68.3 feet bgs rather than the target depth of 75 feet. During installation of the well the flowing sands further invaded the borehole annulus, rising to a depth of 55 feet bgs. Filter pack and infiltration barrier were installed and the well was grouted to 6 feet bgs with bentonite chips added at the surface to facilitate installation of the pitless adapter. Well construction details are presented in the well construction schematic provided in Figure 1.

On Monday, May 1, the Site was cleaned of all debris from drilling and well installation. Due to rains the previous day, the drill rig became stuck when pulling off the well site resulting in ruts in the landscaping to the south of the well. Cuttings

were encapsulated in plastic sheeting and disposed of at the former vermiculite mine. A composite sample of mud and earthen material collected from the drill rig and downhole tools (PW-00001) was collected and analyzed for the presence of asbestos. Asbestos was not detected in sample PW-00001 and the drill rig and support vehicle were pressure washed at the Lincoln County Class IV Landfill's decontamination pad. All other trash was disposed of at the Lincoln County Class IV Landfill.

3.2 Well Development

On Tuesday and Wednesday, May 2 and 3, the well was developed. At the beginning of the well development dilute grout was observed to have invaded the well and was confirmed by a pH measurement of 13.6, indicating the presence of portland cement residue. The development plan was modified to remove the grout and also to develop the natural filter pack in the lower portion of the well. The well was aggressively surged and bailed with a sand bailer and pumped using a submersible pump. At the end of the first day of development the well's specific capacity was 1.2 gallons per minute per foot (gpm/ft) of drawdown and the water was turbid. The well was developed for a second day by aggressive surging with a sand bailer and pumping at approximately 33 gpm with the pump intake set at 2-foot intervals along the well screen's length. At the end of the second day of development the well's specific capacity had improved to 2.2 gpm/ft and the well produced 33 gpm of clear water with minimal sand. The following day at the beginning of the step-drawdown test the water's pH indicated that grout had been successfully removed from the well and adjacent formation. Field parameters are presented in Appendix A and asbestos sampling laboratory results are presented in Appendix B.

3.3 Well Pumping Test Results

On Thursday, May 4, a step-drawdown test was performed and drawdown was measured as the well was pumped at rates of 10, 20, 25, and 33 gpm. Water levels in the well were measured at 1-minute intervals using an automated water level data logger. Due to an error in instantaneous flow measurement at the end of the 20 gpm pumping step, the pumping rate was increased to 25 gpm rather than 33 gpm for 30 minutes before flow was increased to 33 gpm. A total of 7,745 gallons were produced during the 6-hour and 28-minute step-drawdown test and a maximum drawdown of 13.67 feet was observed at a pumping rate of 33.3 gpm. Results of the step-drawdown test indicated that the well could sustain its design rate of 30 gpm for an extended period. Step-drawdown water levels over time are graphed in Figure 2 and pumping rates over time are graphed in Figure 3. Field parameters are presented in Appendix A and asbestos sampling laboratory results are presented in Appendix B.

The 12-hour constant discharge pumping test was begun approximately 4 hours after the end of the step-drawdown test, after the water level in the well had fully recovered. Water levels in the well were measured on 1-minute intervals using an automated water level data logger. Due to the availability of a constant source of power at the Site, the discharge flow rate was monitored at approximately 3-hour intervals during the test rather than hourly. At the end of 12 hours, pumping and

water level data collection continued until water quality sampling was complete. The well was pumped at a relatively constant rate of 28.8 gpm for a total of 14 hours and 44 minutes resulting in production of 25,445 gallons of water. Between minor flow adjustments after 30 minutes of pumping and the collection of water samples after 815 minutes of pumping, the well drawdown remained relatively constant at an average of 11.58 feet, or approximately 35.8 feet bgs while pumping at 29 gpm. During the constant discharge test the well exhibited a specific capacity of 2.5 gpm/ft. Minor variations in the drawdown appear to be due to slight variations in the pumping rate during the test. These results indicate that the drawdown is greatly affected by recharge from the Kootenai River within 100 feet from the well and that the design pumping rate of 30 gpm can be sustained for an extended period. The water level drawdown and pumping rate during the constant discharge test are graphed in Figures 4 and 5, respectively. Field parameters are presented in Appendix A and asbestos sampling laboratory results are presented in Appendix B.

3.4 Water Sampling and Analysis Results

3.4.1 Field Parameter and Field Laboratory Asbestos Results

As mentioned above, a series of water samples was collected as part of the development and pumping tests. These samples were analyzed for asbestos only and field parameters. Field parameters (pH, specific conductance, temperature, and turbidity) are provided in Appendix A. Asbestos concentrations in well water are provided in Appendix B.

Water samples collected during development and during the step-drawdown test indicated that well development was successful in removing asbestos from the formation adjacent to the well. A sample of groundwater collected during the early phase of well development was not analyzed due to high turbidity. Near the end of well development, the concentration of asbestos fibers greater than 10 um was 0.5 million structures per liter (s/L). The U.S. Environmental Protection Agency (EPA) only regulates structure fibers greater than 10 um and has set the drinking water MCL at 7 s/L.

The well water's field pH was measured at the beginning of each day after the water in the well had opportunity for maximum contact time with any residual grout. Measurements indicated that grout in the well and adjacent formation was removed satisfactorily. This was indicated by the decline in pH from 13.6 shortly after development began to 7.85 at the beginning of the step-drawdown test.

During the step-drawdown test, water samples were collected for asbestos analysis at the beginning and end of the 10, 20, and 33 gpm steps to determine the asbestos content of water produced during the "first flush" at different pumping rates and evaluate whether any asbestos observed would be flushed out of the well by continued pumping. Field parameters were also monitored during the test. The concentration of asbestos fibers greater than 10 um was never greater than 0.33 s/L during the step-drawdown test and results from samples collected at the end of each

pumping step indicate that all sizes of asbestos fibers were not detectable (<0.17 s/L) after periods of constant pumping. Increases in asbestos concentration are related to water turbidity, which is to be expected due to flushing of particulates by increased flow velocities near the well. It is anticipated that continued use will result in decreases in both asbestos and turbidity. Field parameter sampling results are provided in Appendix A, and laboratory asbestos analytical results are summarized in Appendix B.

3.4.2 Drinking Water Analysis Results

At the end of the constant rate pumping test, the well was sampled for drinking water parameters required for certification of a municipal drinking water supply by the State of Montana. Samples were submitted to Energy Labs of Billings, Montana for analysis including total Coliform and E. Coli, Nitrate and Nitrite, Radionuclides (Gross Alpha, Radium 226+228, Uranium). Groundwater was also analyzed for drinking water relevant Phase II and Phase V analytical suites for Inroganics (including arsenic, asbestos, and fluoride), volatile organic compounds (VOCs), synthetic organic compounds (SOCs), Pesticides, and Herbicides.

Sample results indicate that all drinking water parameters required by the State of Montana are below EPA MCLs. The fluoride concentration of 2 milligrams per liter (mg/L) is half of the MCL, sulfide was not detected (<0.04 mg/L) and the water temperature at the time of sampling was 13.1 degrees Celsius (55.6 degrees Fahrenheit). These results indicate that the well is not drawing a significant portion of its water from the thermal waters in the deeper aquifer. Asbestos was not detected in the sample collected for drinking water analysis

General water quality parameters indicate that the well water has significant hardness (332 mg/L as CaCO3), is slightly basic as indicated by a field pH of 7.7, and has total dissolved solids content of 443 mg/L. Drinking water analysis results are presented in Appendix C.

3.5 Well Abandonment

The previously existing well at the Site, PW-01, was abandoned by filling with granular bentonite in accordance with State of Montana rules. The well was cut off approximately 3 feet bgs and the ground surface returned to pre-existing conditions.

3.6 Well Piping Installation

On Friday and Saturday, May 12 and 13, 2006, a pitless adaptor and piping to the adjacent wellhouse were installed at a depth of approximately 6 feet bgs and the well was connected to the Site's potable water supply's existing piping. The pump from the first replacement well was disinfected and installed in the new well, and the entire domestic water system at the Site was disinfected by superchlorination. A diagram of the well piping installation is provided as Figure 6.

3.7 State of Montana Well Documentation

Following completion of the well all appropriate forms were prepared and provided to the landowner for his signature and submittal to the State of Montana. Under Montana regulations, a well permit is not required for a well producing less than 35 gpm and less than 10 acre feet per year. The water use of the previous water right was listed as being for industrial use and a new water right filing (Notice of Completion of Groundwater Development) was prepared for domestic use. The following forms are provided in Appendix D:

- Replacement Well Notice
- Notice of Completion of Groundwater Development
- Montana Well Log

Payment of the filing fees for the landowner has been arranged.

3.8 Quality Assurance/Quality Control Samples

Quality control (QC) checks of both field sampling and laboratory sample analyses were used to assess and document data quality.

3.8.1 Field Parameter Quality Control

The accuracy of field analytical instruments was checked against standards and calibration performed according to the manufacturer's recommended procedures as necessary. With the exception of a minor exceedence of high range pH, the other field instruments that are normally calibrated in the field (turbidimeter and specific conductance meter) were within acceptable limits. When checking the field YSI-63 pH/specific conductance/temperature meter against a pH 10.00 standard, the pH reading was consistently in the range of 10.20, outside the acceptable limit of +/- 0.1 standard pH unit (SU). The pH calibration to pH 7.00 standard was consistently within the acceptable limit. Despite recalibration of the pH meter, the error when reading a standard of pH 10.00 standard was persistent. This error was determined to be insignificant with respect to the data quality objectives; the presence of grout in the well and adjacent formation was confirmed by a grossly high pH (>13 SU) at which a variation of +/- 0.2 SU was insignificant, and the more neutral pH range of 7 to 8 SU was calibrated to within acceptable limits.

3.8.2 Trip Blank

The trip blank was analyzed for volatile organic compounds by drinking water method E524.2. Target compounds were not detected at or above the reporting limit.

3.8.3 Laboratory Quality Control

The samples were analyzed according to the appropriate methods and within the holding times specified by the respective analytical methods. Blanks, laboratory control samples (LCS), laboratory duplicates and matrix spikes were analyzed as required by the methods. Surrogates were added to the samples and reported as

required. All quality control results were within criteria with the following exceptions. The recovery of the herbicide dinoseb, at 56%, in the LCS was below the laboratory control limits of 70-130%. With a reporting limit of 1.0 ug/L and a maximum contaminant limit of 7.0 ug/L this recovery is not judged to affect the validity of the data. The matrix spike and matrix spike duplicate recoveries for dinoseb were within quality control criteria. The data were evaluated and all results are considered usable.

Figures

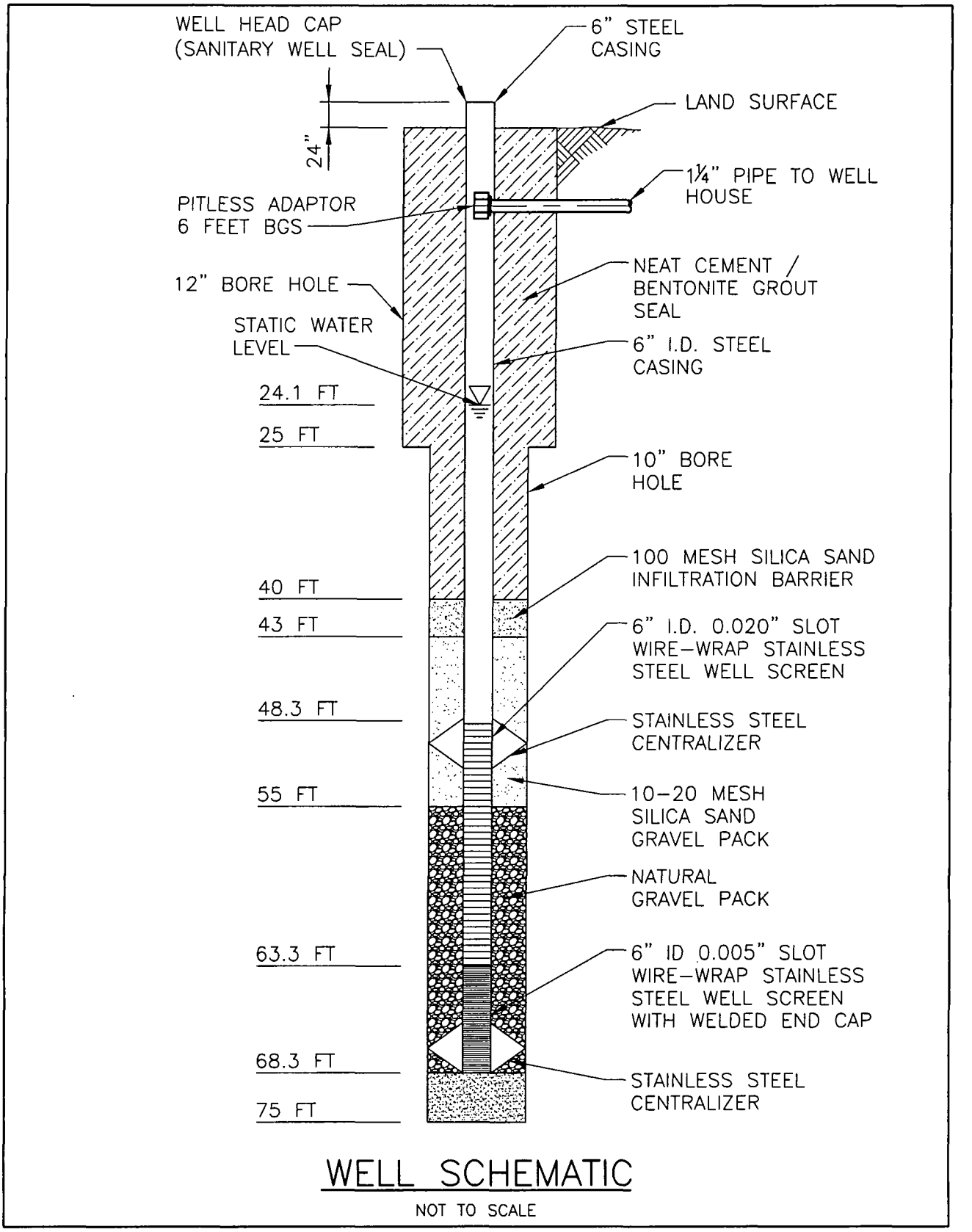

S:\4000\46194\ FIG WELL 1 05/26/06 15:10 simpsonkc

Figure 1
As-Built Schematic of Well

CDM

Figure 2.
Observed Drawdown, Step-Drawdown Aquifer Performance Test·
Former Screening Plant Replacement Well

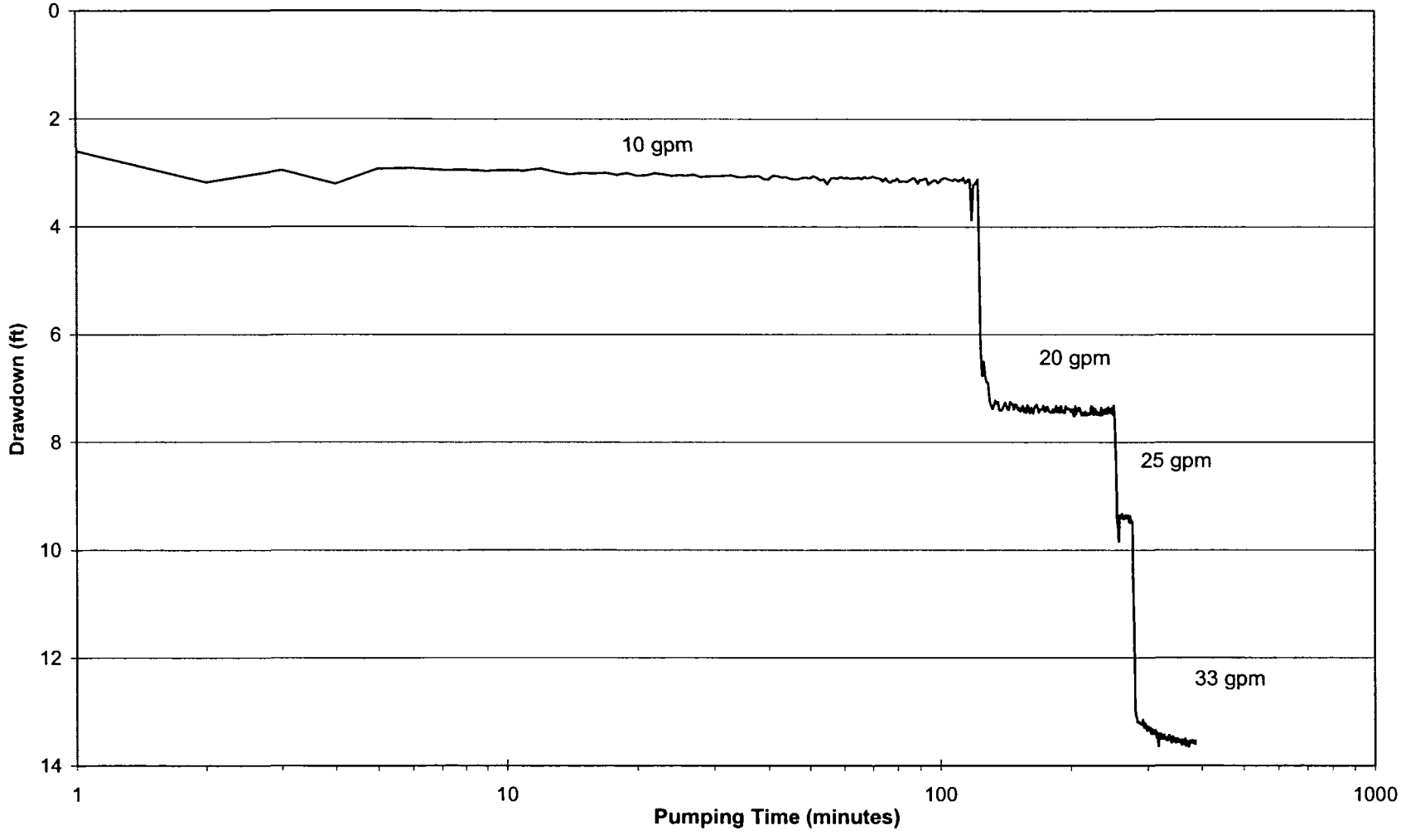

Figure 3.
Pump Discharge Rate, Step-Drawdown Aquifer Performance Test
Former Screening Plant Replacement Well

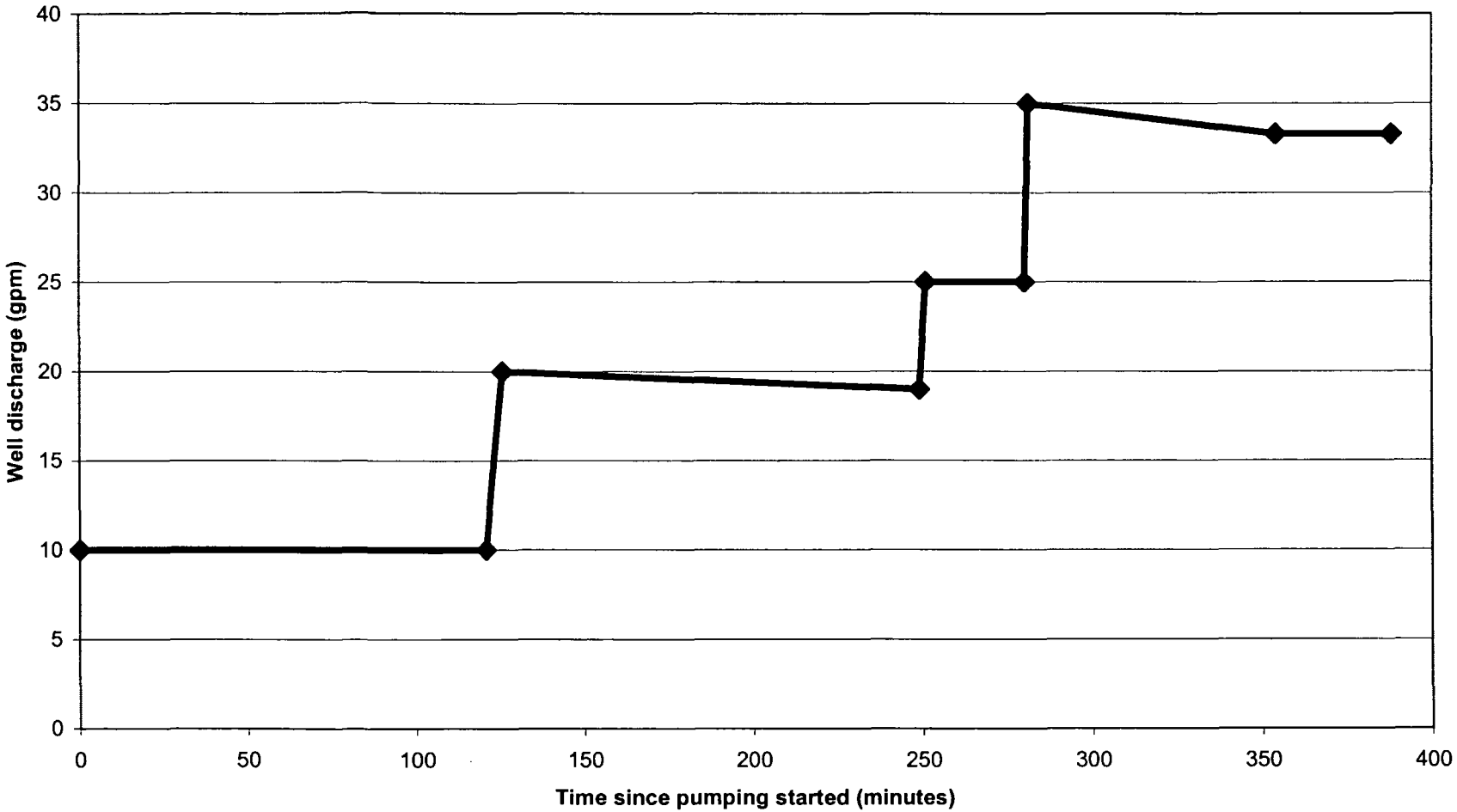

Figure 4.
Observed Drawdown, Constant Rate Aquifer Performance Test
Former Screening Plant Replacement Well

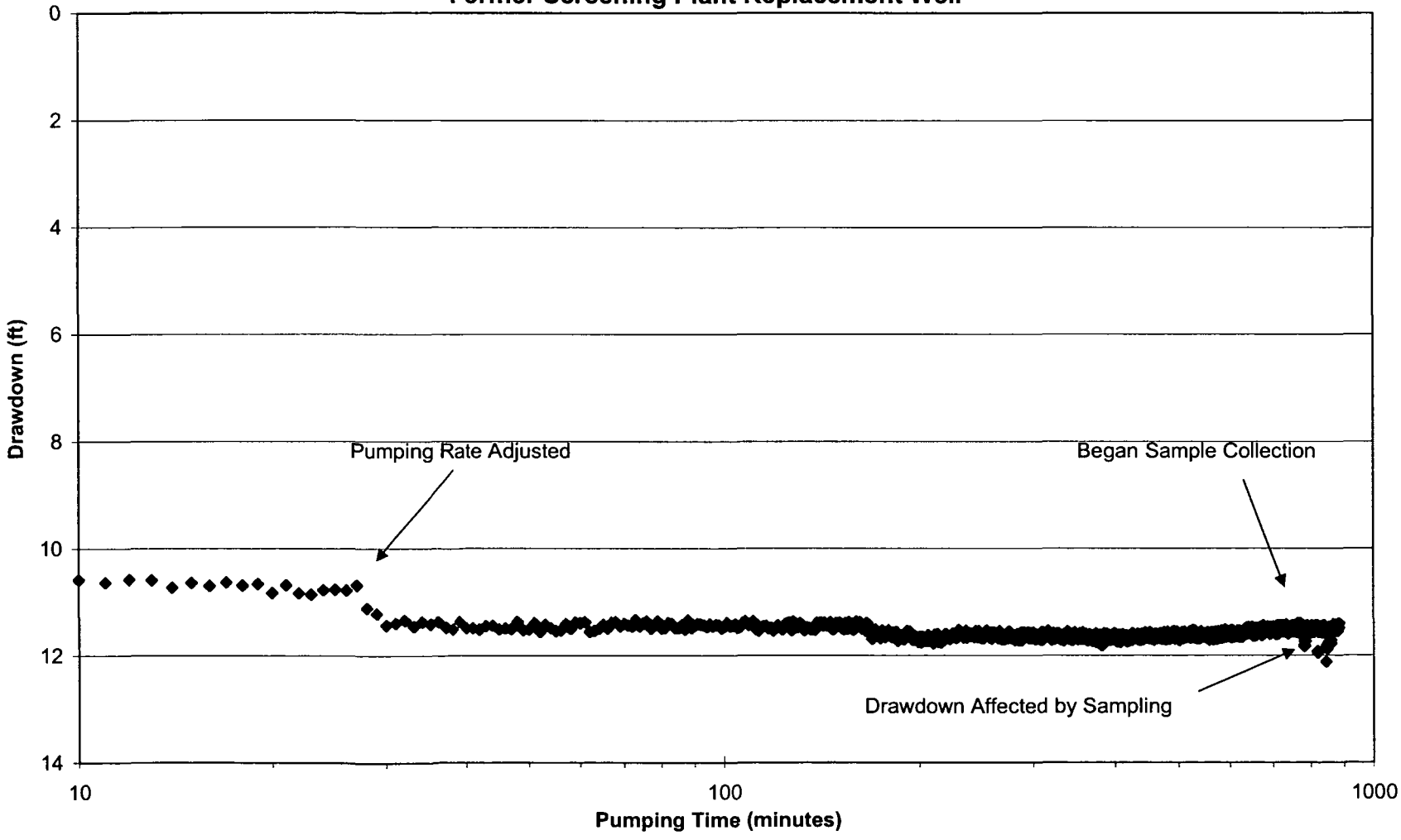

Figure 5.
Pump Discharge Rate, Constant Rate Aquifer Performance Test
Former Screening Plant Replacement Well

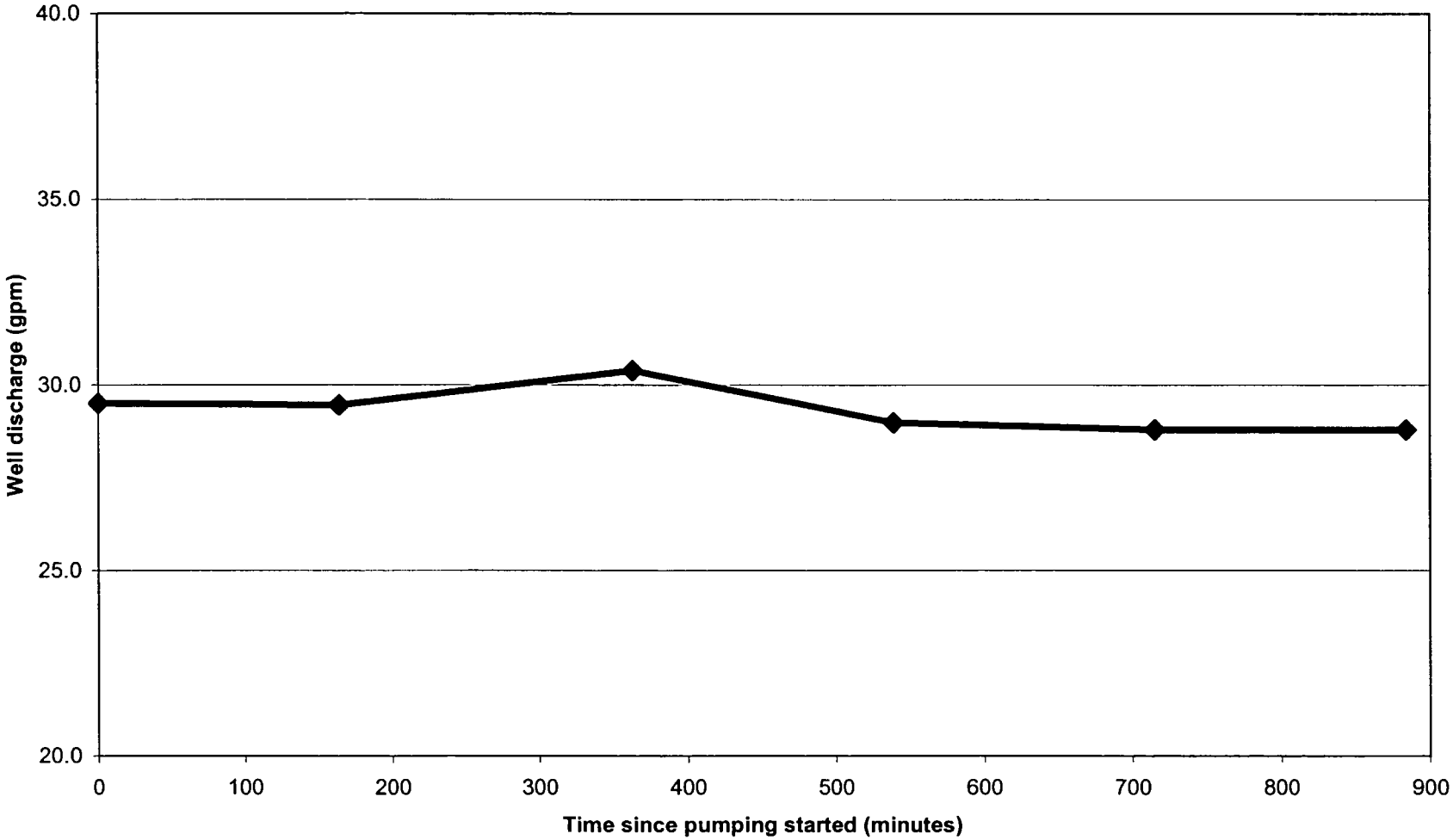

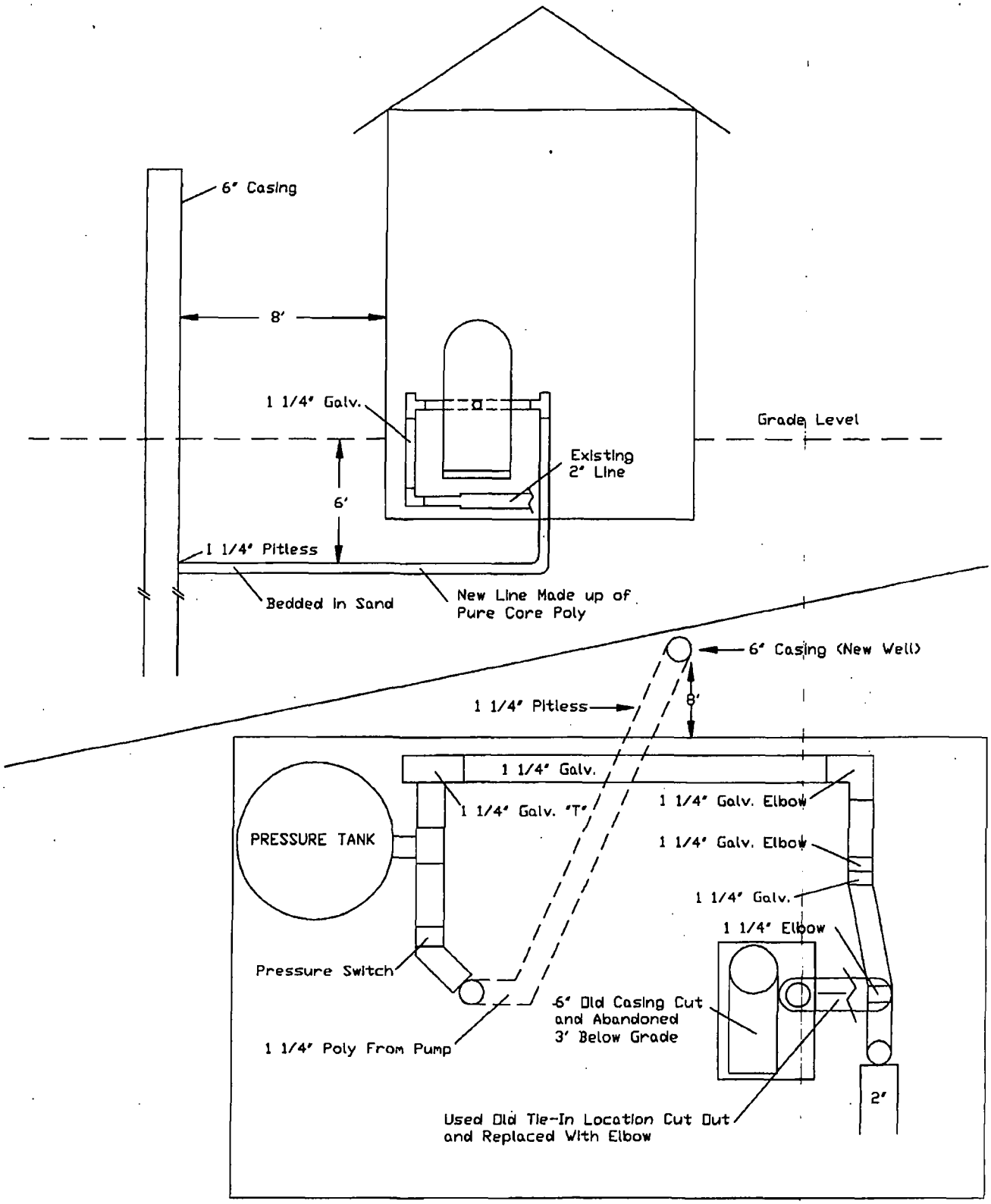

MGS Environmental
2205 N. Woodruff Rd. Suite 3
Spokane, WA 99206
Telephone 509-924-9236

Figure 6
As-Built Schematic of Well Piping Tie-in

DRAWN BY:	CHECKED BY:	PROJECT NO:	DRAWING NOT TO SCALE
R. NEUMILLER	R. NEUMILLER		

DRAWING No. 1 OF 1 DRAWINGS

Appendix A

Water Quality Field Parameter Log

Appendix A
Field Parameter Log
Former Screening Plant Replacement Well

Date	Time	pH	Spec. Cond.	Temperature	Turbidity	Comments
		(SU)	(uMhos/cm)	(C)	(NTU)	
4/29/2006	15:10	NA	233	NA	NA	Kootenai River water
	15:15	NA	458	NA	NA	Rainy Creek Water
	15:45	8.43	274	NA	Highly Turbid	During drilling, from 35' bgs
	16:45	8.16	308	NA	Highly Turbid	During drilling, from 55' bgs
	16:55	8.37	261	NA	Highly Turbid	During drilling, from 60' bgs
	17:15	8.29	168	NA	Highly Turbid	During drilling, from 70' bgs
	17:28	8.34	463	NA	Highly Turbid	During drilling, from 75' bgs, very thick slurry
5/2/2006	9:05	13.58	NA	NA	Highly Turbid	After 1 hr bailing sand & surging
	11:05	9.25	341	13.3	Highly Turbid	Gray Water
	11:14	8.82	387	14.6	Highly Turbid	Gray Water
	11:36	8.45	498	NA	Highly Turbid	Q=4.4 gpm
	13:07	NA	566	14.5	Highly Turbid	Q=6.8 gpm
	13:33	7.75	577	15.0	Highly Turbid	Water Clearing
	13:46	7.81	520	14.9	110	Sand Decreasing
	14:14	7.83	583	14.6	120	Q=8.9 gpm
	14:53	7.48	590	14.1	120	Sample PW-00002 (not analyzed)
	15:22	7.80	604	14.4	170	Q=13.6 gpm, shut down pump to surge
5/3/2006	7:56	8.05	771	11.4	140	Initial bailer for day
	8:32	8.13	744	13.7	Highly Turbid	3rd bailer, surging
	9:30	8.09	679	13.2	Highly Turbid	After surging
	11:33	7.87	786	15.6	Highly Turbid	Initial sample after pump start-up
	11:40	7.81	570	14.6	160	Pump intake at 66.5' BTOC, Q=25 gpm
	12:02	7.78	626	14.2	11	
	12:07	7.77	613	14.3	12	Intake at 66.5', Q=25 gpm
	12:27	7.72	617	12.5	10	Slightly Sandy
	12:31	7.76	602	14.0	12	Raised Pump to 64.5' BTOC
	13:25	7.76	631	14.1	3.6	Pump at 62.5' BTOC Q=33.3 gpm
	13:45	7.74	623	14.1	3.5	
	14:11	7.73	631	14.4	4.5	Pump at 60.5' BTOC
	14:40	7.69	631	14.4	5.1	Pump Raised to 58.5' BTOC
	15:03	7.72	630	14.8	1.7	
	15:24	7.75	600	14.3	5.9	Pump Raised to 51' BTOC
	15:50	7.77	635	14.8	1.9	Sample PW-00003
	16:24	7.78	642	15.0	1.1	
	16:56	7.74	637	15.3	1.9	Pump Lowered to 54' BTOC
	17:20	7.72	683	15.9	1.2	Pump Lowered to 56' BTOC
	17:49	7.75	641	15.8	2.6	Final Development Sample
5/4/2006	7:41	7.85	922	13.5	27	Start step test, 10 gpm, Sample PW-00004
	8:20	7.75	657	14.2	2.5	
	9:00	7.77	653	14.1	1.5	
	9:39	7.79	644	14.1	3.6	End 10 gpm step, Sample PW-00005
	9:45	7.81	649	13.9	3.5	Begin 20 gpm step, Sample PW-00006
	11:02	7.79	657	13.5	1.5	
	11:40	7.77	660	14.0	0.9	End 20 gpm step, Sample PW-00007
	11:55	7.78	648	13.9	1.3	Pumping at 25 gpm
	12:25	7.75	671	14.2	1.3	Begin 33 gpm step, Sample PW-00008
	13:12	7.75	689	14.5	0.6	
	14:05	7.71	700	14.8	0.7	End step test, Sample PW-00009
5/5/2006	8:45	7.72	726	13.1	0.6	Sample PW-00010, drinking water sample

Notes:
NA - Not analyzed
Q - Pump discharge rate

Appendix B

Asbestos Sampling Laboratory Results

Appendix B
Laboratory Asbestos Sample Results
Former Screening Plant Replacement Well

Soil Sample

Sample ID	Date / Time	Result (All Structure Types)			Comments
PW-00001	5/1/2006 10:10	Not Detected			Composite sample from drilling equipment

Water Samples

Sample ID	Date / Time	Result (All Structures) (s/L)	Result (Regulated Structure Size) (>10 um s/L)	Turbidity (NTU)	Comments
PW-00002	5/2/2006 14:45	NA*	NA*	120	Day 1 development
PW-00003	5/3/2006 15:55	1,867,788	498,077	1.9	Day 2 development sample, during continuous pumping
PW-00004	5/4/2006 7:41	664,103	332,051	27	Begin step-drawdown testing
PW-00005	5/4/2006 9:39	166,026	<166,025	3.6	End 10 gpm step
PW-00006	5/4/2006 9:45	332,051	<166,025	3.5	Start 20 gpm step
PW-00007	5/4/2006 11:40	<166,025	<166,025	0.9	End 20 gpm step
PW-00008	5/4/2006 12:25	664,103	332,051	1.3	Start 33 gpm step
PW-00009	5/4/2006 14:05	<166,025	<166,025	0.7	End 33 gpm step
PW-00010	5/5/2006 8:20	<166,025	<166,025	0.6	Collected with drinking water sample, end of 12-hr, 29 gpm test

* PW-00002 Analysis cancelled due to high particulate content

Appendix C

Laboratory Data Reports

ALPHA
WOODS HOLE LABS

June 19, 2006

Ms. Anni Autio
Camp Dresser & McKee, Inc.
1 Cambridge Place
50 Hampshire Street
Cambridge, MA 02139

RE: Subcontractor Report for Drinking Water Analyses
Alpha Job Number L0608540

Dear Ms. Autio,

Please find enclosed the report for the results of the Drinking Water analyses subcontracted to Energy Laboratories, Inc.

If you should have any questions on your report or require anything further, please do not hesitate to contact our Client Services Department at (508) 898-9220.

Sincerely,

Reporting Department
Alpha Woods Hole Labs

RD/hs
Enclosure

ENERGY LABORATORIES, INC. • P.O. Box 30916 • 1120 South 27th Street • Billings, MT 59107-0916
800-735-4489 • 406-252-6325 • 406-252-6069 fax • eli@energylab.com

QA/QC Summary Report

Client: Alpha Analytical Labs
Project:

Report Date: 06/12/06
Work Order: B06050736

Analyte	Result	Units	RL	%REC	Low Limit	High Limit	RPD	RPDLimit	Qual
Method: E524.2									Batch: R75900
Sample ID: LCS	Laboratory Control Sample				Run: VOASATURN_060515A				05/15/06 16:52
Chlorodibromomethane	5.48	ug/L	0.50	110	70	130			
Chloroethane	6.16	ug/L	0.50	123	70	130			
Chloroform	5.56	ug/L	0.50	111	70	130			
Chloromethane	5.36	ug/L	0.50	107	70	130			
2-Chlorotoluene	5.36	ug/L	0.50	107	70	130			
4-Chlorotoluene	5.28	ug/L	0.50	106	70	130			
1,2-Dibromo-3-chloropropane	5.40	ug/L	1.0	108	70	130			
Dibromomethane	5.56	ug/L	0.50	111	70	130			
1,2-Dichlorobenzene	5.40	ug/L	0.50	108	70	130			
1,3-Dichlorobenzene	5.72	ug/L	0.50	114	70	130			
1,4-Dichlorobenzene	5.28	ug/L	0.50	106	70	130			
Dichlorodifluoromethane	6.08	ug/L	0.50	122	70	130			
1,1-Dichloroethane	5.52	ug/L	0.50	110	70	130			
1,2-Dibromoethane	5.36	ug/L	0.50	107	70	130			
1,1-Dichloroethene	5.76	ug/L	0.50	115	70	130			
cis-1,2-Dichloroethene	5.60	ug/L	0.50	112	70	130			
trans-1,2-Dichloroethene	5.80	ug/L	0.50	116	70	130			
1,2-Dichloropropane	5.44	ug/L	0.50	109	70	130			
1,3-Dichloropropane	5.40	ug/L	0.50	108	70	130			
2,2-Dichloropropane	5.56	ug/L	0.50	111	70	130			
1,1-Dichloropropene	5.20	ug/L	0.50	104	70	130			
cis-1,3-Dichloropropene	5.40	ug/L	0.50	108	70	130			
trans-1,3-Dichloropropene	5.68	ug/L	0.50	114	70	130			
Ethylbenzene	5.28	ug/L	0.50	106	70	130			
Hexachlorobutadiene	4.56	ug/L	0.50	91	70	130			
Isopropylbenzene	5.40	ug/L	0.50	108	70	130			
p-Isopropyltoluene	5.32	ug/L	0.50	106	70	130			
Methyl tert-butyl ether (MTBE)	5.28	ug/L	0.50	106	70	130			
Methylene chloride	5.44	ug/L	0.50	109	70	130			
Naphthalene	6.00	ug/L	0.50	120	70	130			
n-Propylbenzene	5.28	ug/L	0.50	106	70	130			
Styrene	5.68	ug/L	0.50	114	70	130			
1,1,1,2-Tetrachloroethane	5.36	ug/L	0.50	107	70	130			
1,1,2,2-Tetrachloroethane	5.44	ug/L	0.50	109	70	130			
Tetrachloroethene	4.80	ug/L	0.50	96	70	130			
Toluene	5.56	ug/L	0.50	111	70	130			
1,2,3-Trichlorobenzene	5.12	ug/L	0.50	102	70	130			
1,2,4-Trichlorobenzene	5.32	ug/L	0.50	106	70	130			
1,1,1-Trichloroethane	5.76	ug/L	0.50	115	70	130			
1,1,2-Trichloroethane	5.64	ug/L	0.50	113	70	130			

Qualifiers:

RL - Analyte reporting limit.

ND - Not detected at the reporting limit.

ENERGY LABORATORIES, INC. • P.O. Box 30916 • 1120 South 27th Street • Billings, MT 59107-0916
800-735-4489 • 406-252-6325 • 406-252-6069 fax • eli@energylab.com

QA/QC Summary Report

Client: Alpha Analytical Labs
Project:

Report Date: 06/12/06
Work Order: B06050736

Analyte	Result	Units	RL	%REC	Low Limit	High Limit	RPD	RPDLimit	Qual
Method: E524.2									Batch: R75900
Sample ID: LCS	Laboratory Control Sample				Run: VOASATURN_060515A				05/15/06 16:52
Trichloroethene	5.04	ug/L	0.50	101	70	130			
Trichlorofluoromethane	5.84	ug/L	0.50	117	70	130			
1,2,3-Trichloropropane	5.44	ug/L	0.50	109	70	130			
1,2,4-Trimethylbenzene	5.44	ug/L	0.50	109	70	130			
1,3,5-Trimethylbenzene	5.52	ug/L	0.50	110	70	130			
Vinyl chloride	5.68	ug/L	0.50	114	70	130			
m+p-Xylenes	10.6	ug/L	0.50	106	70	130			
o-Xylene	5.48	ug/L	0.50	110	70	130			
Surr: p-Bromofluorobenzene			0.50	95	80	120			
Surr: 1,2-Dichloroethane-d4			0.50	103	74	127			
Surr: Toluene-d8			0.50	94	80	120			
Sample ID: MBLK	Method Blank				Run: VOASATURN_060515A				05/15/06 18:16
Benzene	ND	ug/L	0.50						
Bromobenzene	ND	ug/L	0.50						
Bromochloromethane	ND	ug/L	0.50						
Bromodichloromethane	ND	ug/L	0.50						
Bromoform	ND	ug/L	0.50						
Bromomethane	ND	ug/L	0.50						
n-Butylbenzene	ND	ug/L	0.50						
sec-Butylbenzene	ND	ug/L	0.50						
tert-Butylbenzene	ND	ug/L	0.50						
Carbon tetrachloride	ND	ug/L	0.50						
1,2-Dichloroethane	ND	ug/L	0.50						
Chlorobenzene	ND	ug/L	0.50						
Chlorodibromomethane	ND	ug/L	0.50						
Chloroethane	ND	ug/L	0.50						
Chloroform	ND	ug/L	0.50						
Chloromethane	ND	ug/L	0.50						
2-Chlorotoluene	ND	ug/L	0.50						
4-Chlorotoluene	ND	ug/L	0.50						
1,2-Dibromo-3-chloropropane	ND	ug/L	1.0						
Dibromomethane	ND	ug/L	0.50						
1,2-Dichlorobenzene	ND	ug/L	0.50						
1,3-Dichlorobenzene	ND	ug/L	0.50						
1,4-Dichlorobenzene	ND	ug/L	0.50						
Dichlorodifluoromethane	ND	ug/L	0.50						
1,1-Dichloroethane	ND	ug/L	0.50						
1,2-Dibromoethane	ND	ug/L	0.50						
1,1-Dichloroethene	ND	ug/L	0.50						
cis-1,2-Dichloroethene	ND	ug/L	0.50						

Qualifiers:

RL - Analyte reporting limit.

ND - Not detected at the reporting limit.

ENERGY LABORATORIES, INC. • P.O. Box 30916 • 1120 South 27th Street • Billings, MT 59107-0916
800-735-4489 • 406-252-6325 • 406-252-6069 fax • eli@energylab.com

QA/QC Summary Report

Client: Alpha Analytical Labs
Project:

Report Date: 06/12/06
Work Order: B06050736

Analyte	Result	Units	RL	%REC	Low Limit	High Limit	RPD	RPDLimit	Qual
Method: E524.2									Batch: R75900
Sample ID: MBLK	Method Blank				Run: VOASATURN_060515A			05/15/06 18:16	
trans-1,2-Dichloroethene	ND	ug/L	0.50						
1,2-Dichloropropane	ND	ug/L	0.50						
1,3-Dichloropropane	ND	ug/L	0.50						
2,2-Dichloropropane	ND	ug/L	0.50						
1,1-Dichloropropene	ND	ug/L	0.50						
cis-1,3-Dichloropropene	ND	ug/L	0.50						
trans-1,3-Dichloropropene	ND	ug/L	0.50						
Ethylbenzene	ND	ug/L	0.50						
Hexachlorobutadiene	ND	ug/L	0.50						
Isopropylbenzene	ND	ug/L	0.50						
p-Isopropyltoluene	ND	ug/L	0.50						
Methyl tert-butyl ether (MTBE)	ND	ug/L	0.50						
Methylene chloride	ND	ug/L	0.50						
Naphthalene	ND	ug/L	0.50						
n-Propylbenzene	ND	ug/L	0.50						
Styrene	ND	ug/L	0.50						
1,1,1,2-Tetrachloroethane	ND	ug/L	0.50						
1,1,2,2-Tetrachloroethane	ND	ug/L	0.50						
Tetrachloroethene	ND	ug/L	0.50						
Toluene	ND	ug/L	0.50						
1,2,3-Trichlorobenzene	ND	ug/L	0.50						
1,2,4-Trichlorobenzene	ND	ug/L	0.50						
1,1,1-Trichloroethane	ND	ug/L	0.50						
1,1,2-Trichloroethane	ND	ug/L	0.50						
Trichloroethene	ND	ug/L	0.50						
Trichlorofluoromethane	ND	ug/L	0.50						
1,2,3-Trichloropropane	ND	ug/L	0.50						
1,2,4-Trimethylbenzene	ND	ug/L	0.50						
1,3,5-Trimethylbenzene	ND	ug/L	0.50						
Vinyl chloride	ND	ug/L	0.50						
m+p-Xylenes	ND	ug/L	0.50						
o-Xylene	ND	ug/L	0.50						
Trihalomethanes, Total	ND	ug/L	0.50						
Xylenes, Total	ND	ug/L	0.50						
Surr: p-Bromofluorobenzene			0.50	96	80	120			
Surr: 1,2-Dichloroethane-d4			0.50	96	74	127			
Surr: Toluene-d8			0.50	101	80	120			
Sample ID: B06051012-001D	Sample Duplicate				Run: VOASATURN_060515A			05/15/06 19:21	
Benzene	ND	ug/L	0.50				0.0	20	
Bromobenzene	ND	ug/L	0.50				0.0	20	

Qualifiers:

RL - Analyte reporting limit.

ND - Not detected at the reporting limit.

ENERGY LABORATORIES, INC. • P.O. Box 30916 • 1120 South 27th Street • Billings, MT 59107-0916
800-735-4489 • 406-252-6325 • 406-252-6069 fax • eli@energylab.com

QA/QC Summary Report

Client: Alpha Analytical Labs
Project:

Report Date: 06/12/06
Work Order: B06050736

Analyte	Result	Units	RL	%REC	Low Limit	High Limit	RPD	RPDLimit	Qual
Method: E524.2								Batch: R75900	
Sample ID: B06051012-001D	Sample Duplicate				Run: VOASATURN_060515A			05/15/06 19:21	
Bromochloromethane	ND	ug/L	0.50				0.0	20	
Bromodichloromethane	ND	ug/L	0.50				0.0	20	
Bromoform	ND	ug/L	0.50				0.0	20	
Bromomethane	ND	ug/L	0.50				0.0	20	
n-Butylbenzene	ND	ug/L	0.50				0.0	20	
sec-Butylbenzene	ND	ug/L	0.50				0.0	20	
tert-Butylbenzene	ND	ug/L	0.50				0.0	20	
Carbon tetrachloride	ND	ug/L	0.50				0.0	20	
1,2-Dichloroethane	ND	ug/L	0.50				0.0	20	
Chlorobenzene	ND	ug/L	0.50				0.0	20	
Chlorodibromomethane	ND	ug/L	0.50				0.0	20	
Chloroethane	ND	ug/L	0.50				0.0	20	
Chloroform	ND	ug/L	0.50				0.0	20	
Chloromethane	ND	ug/L	0.50				0.0	20	
2-Chlorotoluene	ND	ug/L	0.50				0.0	20	
4-Chlorotoluene	ND	ug/L	0.50				0.0	20	
1,2-Dibromo-3-chloropropane	ND	ug/L	1.0				0.0	20	
Dibromomethane	ND	ug/L	0.50				0.0	20	
1,2-Dichlorobenzene	ND	ug/L	0.50				0.0	20	
1,3-Dichlorobenzene	ND	ug/L	0.50				0.0	20	
1,4-Dichlorobenzene	0.480	ug/L	0.50				0.0	20	
Dichlorodifluoromethane	ND	ug/L	0.50				0.0	20	
1,1-Dichloroethane	ND	ug/L	0.50				0.0	20	
1,2-Dibromoethane	ND	ug/L	0.50				0.0	20	
1,1-Dichloroethene	ND	ug/L	0.50				0.0	20	
cis-1,2-Dichloroethene	ND	ug/L	0.50				0.0	20	
trans-1,2-Dichloroethene	ND	ug/L	0.50				0.0	20	
1,2-Dichloropropane	ND	ug/L	0.50				0.0	20	
1,3-Dichloropropane	ND	ug/L	0.50				0.0	20	
2,2-Dichloropropane	ND	ug/L	0.50				0.0	20	
1,1-Dichloropropene	ND	ug/L	0.50				0.0	20	
cis-1,3-Dichloropropene	ND	ug/L	0.50				0.0	20	
trans-1,3-Dichloropropene	ND	ug/L	0.50				0.0	20	
Ethylbenzene	ND	ug/L	0.50				0.0	20	
Hexachlorobutadiene	ND	ug/L	0.50				0.0	20	
Isopropylbenzene	ND	ug/L	0.50				0.0	20	
p-Isopropyltoluene	ND	ug/L	0.50				0.0	20	
Methyl tert-butyl ether (MTBE)	ND	ug/L	0.50				0.0	20	
Methylene chloride	ND	ug/L	0.50				0.0	20	
Naphthalene	ND	ug/L	0.50				0.0	20	

Qualifiers:

RL - Analyte reporting limit.

ND - Not detected at the reporting limit.

ENERGY LABORATORIES, INC. • P.O. Box 30916 • 1120 South 27th Street • Billings, MT 59107-0916
800-735-4489 • 406-252-6325 • 406-252-6069 fax • eli@energylab.com

QA/QC Summary Report

Client: Alpha Analytical Labs
Project:

Report Date: 06/12/06
Work Order: B06050736

Analyte	Result	Units	RL	%REC	Low Limit	High Limit	RPD	RPDLimit	Qual
Method: E524.2									Batch: R75900
Sample ID: B06051012-001D	Sample Duplicate				Run: VOASATURN_060515A			05/15/06 19:21	
n-Propylbenzene	ND	ug/L	0.50				0.0	20	
Styrene	ND	ug/L	0.50				0.0	20	
1,1,1,2-Tetrachloroethane	ND	ug/L	0.50				0.0	20	
1,1,2,2-Tetrachloroethane	ND	ug/L	0.50				0.0	20	
Tetrachloroethene	ND	ug/L	0.50				0.0	20	
Toluene	ND	ug/L	0.50				0.0	20	
1,2,3-Trichlorobenzene	ND	ug/L	0.50				0.0	20	
1,2,4-Trichlorobenzene	ND	ug/L	0.50				0.0	20	
1,1,1-Trichloroethane	ND	ug/L	0.50				0.0	20	
1,1,2-Trichloroethane	ND	ug/L	0.50				0.0	20	
Trichloroethene	ND	ug/L	0.50				0.0	20	
Trichlorofluoromethane	ND	ug/L	0.50				0.0	20	
1,2,3-Trichloropropane	ND	ug/L	0.50				0.0	20	
1,2,4-Trimethylbenzene	ND	ug/L	0.50				0.0	20	
1,3,5-Trimethylbenzene	ND	ug/L	0.50				0.0	20	
Vinyl chloride	ND	ug/L	0.50				0.0	20	
m+p-Xylenes	ND	ug/L	0.50				0.0	20	
o-Xylene	ND	ug/L	0.50				0.0	20	
Trihalomethanes, Total	ND	ug/L	0.50				0.0	20	
Xylenes, Total	ND	ug/L	0.50						
Surr: p-Bromofluorobenzene			0.50	84	80	120			
Surr: 1,2-Dichloroethane-d4			0.50	97	74	127			
Surr: Toluene-d8			0.50	98	80	120			

Qualifiers:

RL - Analyte reporting limit.

ND - Not detected at the reporting limit.

ENERGY LABORATORIES, INC. • P.O. Box 30916 • 1120 South 27th Street • Billings, MT 59107-0916
800-735-4489 • 406-252-6325 • 406-252-6069 fax • eli@energylab.com

QA/QC Summary Report

Client: Alpha Analytical Labs
Project:

Report Date: 06/12/06
Work Order: B06050736

Analyte	Result	Units	RL	%REC	Low Limit	High Limit	RPD	RPDLimit	Qual
Method: E525.2									Batch: 21057
Sample ID: MB-21057	Method Blank				Run: SVSATURN_060515A				05/15/06 17:55
Atrazine	ND	ug/L	0.10						
Benzo(a)pyrene	ND	ug/L	0.10						
bis(2-ethylhexyl)Adipate	ND	ug/L	0.50						
bis(2-ethylhexyl)Phthalate	ND	ug/L	2.0						
Butachlor	ND	ug/L	0.10						
Metolachlor	ND	ug/L	0.10						
Metribuzin	ND	ug/L	0.10						
Propachlor	ND	ug/L	0.10						
Simazine	ND	ug/L	0.10						
Surr: 1,3-Dimethyl-2-nitrobenzene			0.10	111	70	130			
Surr: Perylene-d12			0.10	95	70	130			
Surr: Pyrene-d10			0.10	102	70	130			
Surr: Triphenylphosphate			0.10	108	70	130			
Sample ID: LCS-21057	Laboratory Control Sample				Run: SVSATURN_060515A				05/15/06 18:34
Atrazine	2.15	ug/L	0.10	107	70	130			
Benzo(a)pyrene	1.80	ug/L	0.10	90	70	130			
bis(2-ethylhexyl)Adipate	2.18	ug/L	0.50	109	70	130			
bis(2-ethylhexyl)Phthalate	2.23	ug/L	2.0	112	70	130			
Butachlor	2.50	ug/L	0.10	125	70	130			
Metolachlor	2.37	ug/L	0.10	119	70	130			
Metribuzin	1.98	ug/L	0.10	99	70	130			
Propachlor	2.28	ug/L	0.10	114	70	130			
Simazine	2.19	ug/L	0.10	109	70	130			
Surr: 1,3-Dimethyl-2-nitrobenzene			0.10	111	70	130			
Surr: Perylene-d12			0.10	95	70	130			
Surr: Pyrene-d10			0.10	110	70	130			
Surr: Triphenylphosphate			0.10	108	70	130			
Sample ID: B06051012-001GMS	Sample Matrix Spike				Run: SVSATURN_060515A				05/15/06 19:52
Atrazine	2.18	ug/L	0.10	109	70	130			
Benzo(a)pyrene	1.80	ug/L	0.10	90	70	130			
bis(2-ethylhexyl)Adipate	1.86	ug/L	0.50	93	70	130			
bis(2-ethylhexyl)Phthalate	2.21	ug/L	2.0	110	70	130			
Butachlor	2.28	ug/L	0.10	114	70	130			
Metolachlor	2.28	ug/L	0.10	114	70	130			
Metribuzin	2.05	ug/L	0.10	102	70	130			
Propachlor	2.23	ug/L	0.10	112	70	130			
Simazine	1.96	ug/L	0.10	98	70	130			
Surr: 1,3-Dimethyl-2-nitrobenzene			0.10	110	70	130			
Surr: Perylene-d12			0.10	93	70	130			

Qualifiers:

RL - Analyte reporting limit.

ND - Not detected at the reporting limit.

ENERGY LABORATORIES, INC. • P.O. Box 30916 • 1120 South 27th Street • Billings, MT 59107-0916
800-735-4489 • 406-252-6325 • 406-252-6069 fax • eli@energylab.com

QA/QC Summary Report

Client: Alpha Analytical Labs
Project:

Report Date: 06/12/06
Work Order: B06050736

Analyte	Result	Units	RL	%REC	Low Limit	High Limit	RPD	RPDLimit	Qual
Method: E525.2								Batch: 21057	
Sample ID: B06051012-001GMS	Sample Matrix Spike				Run: SVSATURN_060515A			05/15/06 19:52	
Surr: Pyrene-d10			0.10	107	70	130			
Surr: Triphenylphosphate			0.10	108	70	130			
Sample ID: B06051012-001GMSD	Sample Matrix Spike Duplicate				Run: SVSATURN_060515A			05/15/06 20:31	
Atrazine	1.96	ug/L	0.10	98	70	130	11	40	
Benzo(a)pyrene	1.73	ug/L	0.10	87	70	130	4.0	40	
bis(2-ethylhexyl)Adipate	2.00	ug/L	0.50	100	70	130	7.3	40	
bis(2-ethylhexyl)Phthalate	2.33	ug/L	2.0	117	70	130	5.3	40	
Butachlor	2.24	ug/L	0.10	112	70	130	1.8	40	
Metolachlor	2.34	ug/L	0.10	117	70	130	2.6	40	
Metribuzin	2.02	ug/L	0.10	101	70	130	1.5	40	
Propachlor	2.23	ug/L	0.10	112	70	130	0.0	40	
Simazine	1.93	ug/L	0.10	97	70	130	1.5	40	
Surr: 1,3-Dimethyl-2-nitrobenzene			0.10	106	70	130	0.0	40	
Surr: Perylene-d12			0.10	91	70	130	0.0	40	
Surr: Pyrene-d10			0.10	106	70	130	0.0	40	
Surr: Triphenylphosphate			0.10	113	70	130	0.0	40	
Method: E525.2								Analytical Run: SVSATURN_060516A	
Sample ID: 525+_CCV_3	Continuing Calibration Verification Standard							05/16/06 12:42	
Atrazine	1.82	ug/L	0.10	91	70	130			
Benzo(a)pyrene	1.68	ug/L	0.10	84	70	130			
bis(2-ethylhexyl)Adipate	1.79	ug/L	0.50	90	70	130			
bis(2-ethylhexyl)Phthalate	1.81	ug/L	2.0	91	70	130			
Butachlor	1.83	ug/L	0.10	92	70	130			
Metolachlor	1.92	ug/L	0.10	96	70	130			
Metribuzin	1.90	ug/L	0.10	95	70	130			
Propachlor	1.79	ug/L	0.10	90	70	130			
Simazine	1.83	ug/L	0.10	92	70	130			
Surr: 1,3-Dimethyl-2-nitrobenzene			0.10	101	70	130			
Surr: Perylene-d12			0.10	97	70	130			
Surr: Pyrene-d10			0.10	102	70	130			
Surr: Triphenylphosphate			0.10	105	70	130			

Qualifiers:

RL - Analyte reporting limit.

ND - Not detected at the reporting limit.

ENERGY LABORATORIES, INC. • P.O. Box 30916 • 1120 South 27th Street • Billings, MT 59107-0916
800-735-4489 • 406-252-6325 • 406-252-6069 fax • eli@energylab.com

QA/QC Summary Report

Client: Alpha Analytical Labs
Project:

Report Date: 06/12/06
Work Order: B06050736

Analyte	Result	Units	RL	%REC	Low Limit	High Limit	RPD	RPDLimit	Qual
Method: E531.1								Analytical Run: SUB-C65883	
Sample ID: CCV_02r	Continuing Calibration Verification Standard								05/09/06 15:28
Aldicarb	4.6	ug/L	0.40	93	80	120			
Aldicarb sulfone	5.0	ug/L	0.40	101	80	120			
Aldicarb sulfoxide	4.9	ug/L	0.40	98	80	120			
Carbaryl	4.9	ug/L	0.40	97	80	120			
Carbofuran	4.7	ug/L	0.40	94	80	120			
3-Hydroxycarbofuran	4.5	ug/L	0.40	89	80	120			
Methiocarb	5.1	ug/L	0.40	102	80	120			
Methomyl	4.6	ug/L	0.40	92	80	120			
Oxamyl	5.0	ug/L	0.40	100	80	120			
Baygon	5.6	ug/L	0.40	112	80	120			
Surr: BDMC			0.40	107	70	130			
Sample ID: ICV_05r	Initial Calibration Verification Standard								05/09/06 17:16
Aldicarb	8.6	ug/L	0.40	86	80	120			
Aldicarb sulfone	11	ug/L	0.40	107	80	120			
Aldicarb sulfoxide	9.8	ug/L	0.40	98	80	120			
Carbaryl	9.2	ug/L	0.40	92	80	120			
Carbofuran	8.3	ug/L	0.40	83	80	120			
3-Hydroxycarbofuran	9.1	ug/L	0.40	91	80	120			
Methiocarb	9.1	ug/L	0.40	91	80	120			
Methomyl	9.5	ug/L	0.40	95	80	120			
Oxamyl	11	ug/L	0.40	108	80	120			
Baygon	10	ug/L	0.40	105	80	120			
Surr: BDMC			0.40	100	70	130			
Sample ID: CCV_21r	Continuing Calibration Verification Standard								05/10/06 03:28
Aldicarb	4.6	ug/L	0.40	92	80	120			
Aldicarb sulfone	5.3	ug/L	0.40	106	80	120			
Aldicarb sulfoxide	4.6	ug/L	0.40	92	80	120			
Carbaryl	5.0	ug/L	0.40	101	80	120			
Carbofuran	4.5	ug/L	0.40	90	80	120			
3-Hydroxycarbofuran	4.6	ug/L	0.40	92	80	120			
Methiocarb	4.8	ug/L	0.40	95	80	120			
Methomyl	4.9	ug/L	0.40	98	80	120			
Oxamyl	5.2	ug/L	0.40	104	80	120			
Baygon	4.8	ug/L	0.40	97	80	120			
Surr: BDMC			0.40	98	70	130			
Sample ID: CCV_30r	Continuing Calibration Verification Standard								05/10/06 16:22
Aldicarb	4.9	ug/L	0.40	97	80	120			
Aldicarb sulfone	4.8	ug/L	0.40	96	80	120			

Qualifiers:

RL - Analyte reporting limit.

ND - Not detected at the reporting limit.

ENERGY LABORATORIES, INC. • P.O. Box 30916 • 1120 South 27th Street • Billings, MT 59107-0916
800-735-4489 • 406-252-6325 • 406-252-6069 fax • eli@energylab.com

QA/QC Summary Report

Client: Alpha Analytical Labs
Project:

Report Date: 06/12/06
Work Order: B06050736

Analyte	Result	Units	RL	%REC	Low Limit	High Limit	RPD	RPDLimit	Qual
Method: E531.1								Analytical Run: SUB-C65883	
Sample ID: CCV_30r	Continuing Calibration Verification Standard							05/10/06 16:22	
Aldicarb sulfoxide	4.9	ug/L	0.40	98	80	120			
Carbaryl	4.2	ug/L	0.40	84	80	120			
Carbofuran	4.4	ug/L	0.40	89	80	120			
3-Hydroxycarbofuran	4.6	ug/L	0.40	91	80	120			
Methiocarb	4.7	ug/L	0.40	93	80	120			
Methomyl	4.6	ug/L	0.40	92	80	120			
Oxamyl	4.9	ug/L	0.40	98	80	120			
Baygon	5.1	ug/L	0.40	102	80	120			
Surr: BDMC			0.40	103	70	130			
Method: E531.1								Batch: C_R65883	
Sample ID: LCS_03r	Laboratory Control Sample				Run: SUB-C65883			05/09/06 16:04	
Aldicarb	4.2	ug/L	0.40	104	80	120			
Aldicarb sulfone	3.8	ug/L	0.40	96	80	120			
Aldicarb sulfoxide	3.8	ug/L	0.40	96	80	120			
Carbaryl	3.9	ug/L	0.40	96	80	120			
Carbofuran	3.9	ug/L	0.40	98	80	120			
3-Hydroxycarbofuran	3.9	ug/L	0.40	99	80	120			
Methiocarb	4.4	ug/L	0.40	109	80	120			
Methomyl	3.7	ug/L	0.40	92	80	120			
Oxamyl	4.0	ug/L	0.40	99	80	120			
Baygon	4.4	ug/L	0.40	110	80	120			
Surr: BDMC			0.40	82	70	130			
Sample ID: LCSD_04r	Laboratory Control Sample Duplicate				Run: SUB-C65883			05/09/06 16:40	
Aldicarb	3.9	ug/L	0.40	98	80	120	6.7	20	
Aldicarb sulfone	3.8	ug/L	0.40	96	80	120	0.0	20	
Aldicarb sulfoxide	4.0	ug/L	0.40	99	80	120	3.3	20	
Carbaryl	3.6	ug/L	0.40	90	80	120	6.7	20	
Carbofuran	3.4	ug/L	0.40	85	80	120	14	20	
3-Hydroxycarbofuran	4.2	ug/L	0.40	105	80	120	6.2	20	
Methiocarb	4.0	ug/L	0.40	99	80	120	10	20	
Methomyl	3.7	ug/L	0.40	92	80	120	0.5	20	
Oxamyl	3.8	ug/L	0.40	94	80	120	5.4	20	
Baygon	4.2	ug/L	0.40	104	80	120	5.8	20	
Surr: BDMC			0.40	83	70	130	0.0	20	
Sample ID: MBLK_06r	Method Blank				Run: SUB-C65883			05/09/06 17:52	
Aldicarb	ND	ug/L	0.08						
Aldicarb sulfone	ND	ug/L	0.1						
Aldicarb sulfoxide	ND	ug/L	0.05						

Qualifiers:

RL - Analyte reporting limit.

ND - Not detected at the reporting limit.

ENERGY LABORATORIES, INC. • P.O. Box 30916 • 1120 South 27th Street • Billings, MT 59107-0916
800-735-4489 • 406-252-6325 • 406-252-6069 fax • eli@energylab.com

QA/QC Summary Report

Client: Alpha Analytical Labs
Project:

Report Date: 06/12/06
Work Order: B06050736

Analyte	Result	Units	RL	%REC	Low Limit	High Limit	RPD	RPDLimit	Qual
Method: E531.1									Batch: C_R65883
Sample ID: MBLK_06r	Method Blank				Run: SUB-C65883				05/09/06 17:52
Carbaryl	ND	ug/L	0.09						
Carbofuran	ND	ug/L	0.09						
3-Hydroxycarbofuran	ND	ug/L	0.10						
Methiocarb	ND	ug/L	0.05						
Methomyl	ND	ug/L	0.10						
Oxamyl	ND	ug/L	0.07						
Baygon	ND	ug/L	0.08						
Surr: BDMC			0.05	105	70	130			
Sample ID: C06050365-001HMS	Sample Matrix Spike				Run: SUB-C65883				05/10/06 01:40
Aldicarb	3.3	ug/L	0.40	83	80	120			
Aldicarb sulfone	3.9	ug/L	0.40	99	80	120			
Aldicarb sulfoxide	3.6	ug/L	0.40	91	80	120			
Carbaryl	3.8	ug/L	0.40	94	80	120			
Carbofuran	3.7	ug/L	0.40	94	80	120			
3-Hydroxycarbofuran	3.6	ug/L	0.40	89	80	120			
Methiocarb	3.6	ug/L	0.40	90	80	120			
Methomyl	3.8	ug/L	0.40	94	80	120			
Oxamyl	3.7	ug/L	0.40	93	80	120			
Baygon	3.8	ug/L	0.40	96	80	120			
Surr: BDMC			0.40	101	70	130			
Sample ID: C06050365-001HMSD	Sample Matrix Spike Duplicate				Run: SUB-C65883				05/10/06 02:16
Aldicarb	3.9	ug/L	0.40	96	80	120	15	20	
Aldicarb sulfone	3.5	ug/L	0.40	88	80	120	12	20	
Aldicarb sulfoxide	3.7	ug/L	0.40	93	80	120	2.2	20	
Carbaryl	4.0	ug/L	0.40	100	80	120	5.7	20	
Carbofuran	3.8	ug/L	0.40	94	80	120	0.8	20	
3-Hydroxycarbofuran	3.7	ug/L	0.40	93	80	120	4.7	20	
Methiocarb	3.9	ug/L	0.40	97	80	120	7.5	20	
Methomyl	4.0	ug/L	0.40	99	80	120	5.7	20	
Oxamyl	4.0	ug/L	0.40	100	80	120	7.2	20	
Baygon	3.5	ug/L	0.40	87	80	120	9.6	20	
Surr: BDMC			0.40	100	70	130	0.0	20	
Sample ID: C06050037-002PMS	Sample Matrix Spike				Run: SUB-C65883				05/10/06 13:22
Aldicarb	3.4	ug/L	0.40	86	80	120			
Aldicarb sulfone	3.7	ug/L	0.40	92	80	120			
Aldicarb sulfoxide	3.7	ug/L	0.40	91	80	120			
Carbaryl	3.3	ug/L	0.40	83	80	120			
Carbofuran	3.8	ug/L	0.40	96	80	120			

Qualifiers:

RL - Analyte reporting limit.

ND - Not detected at the reporting limit.

ENERGY LABORATORIES, INC. • P.O. Box 30916 • 1120 South 27th Street • Billings, MT 59107-0916
800-735-4489 • 406-252-6325 • 406-252-6069 fax • eli@energylab.com

QA/QC Summary Report

Client: Alpha Analytical Labs
Project:

Report Date: 06/12/06
Work Order: B06050736

Analyte	Result	Units	RL	%REC	Low Limit	High Limit	RPD	RPDLimit	Qual
Method: E531.1									Batch: C_R65883
Sample ID: C06050037-002PMS	Sample Matrix Spike				Run: SUB-C65883				05/10/06 13:22
3-Hydroxycarbofuran	3.5	ug/L	0.40	88	80	120			
Methiocarb	3.9	ug/L	0.40	98	80	120			
Methomyl	3.6	ug/L	0.40	90	80	120			
Oxamyl	3.7	ug/L	0.40	92	80	120			
Baygon	4.2	ug/L	0.40	105	80	120			
Surr: BDMC			0.40	75	70	130			
Method: E900.0									Batch: C_GrAB-0133
Sample ID: MB-R66596	Method Blank				Run: SUB-C66596				05/24/06 14:00
Gross Alpha	ND	pCi/L	1						
Sample ID: LCS-R66596	Laboratory Control Sample				Run: SUB-C66596				05/26/06 04:54
Gross Alpha	223	pCi/L	3.0	91	70	130			
Sample ID: C06050496-001BMD	Sample Duplicate				Run: SUB-C66596				05/26/06 04:55
Gross Alpha	3.99	pCi/L	3.0				0.0	40.2	
Gross Alpha precision (±)	0.651	pCi/L							
Sample ID: C06050496-001BMS	Sample Matrix Spike				Run: SUB-C66596				05/26/06 04:55
Gross Alpha	270	pCi/L	3.0	110	70	130			
Sample ID: C06050496-001BMSD	Sample Matrix Spike Duplicate				Run: SUB-C66596				05/26/06 04:55
Gross Alpha	277	pCi/L	3.0	113	70	130	0.0	11.7	
Method: E903.0									Batch: C_RA226-1539
Sample ID: C06050381-001AMS	Sample Matrix Spike				Run: SUB-C66769				05/30/06 16:08
Radium 226	26.8	pCi/L	0.20	127	70	130			
Sample ID: C06050381-001AMSD	Sample Matrix Spike Duplicate				Run: SUB-C66769				05/30/06 16:08
Radium 226	23.8	pCi/L	0.20	113	70	130	12	20	
Sample ID: MB-RA226-1539	Method Blank				Run: SUB-C66769				05/30/06 16:08
Radium 226	ND	pCi/L	0.2						
Sample ID: RB-RA226-1539	Equipment Blank				Run: SUB-C66769				05/30/06 16:08
Radium 226	ND	pCi/L	0.20		0	0			
Radium 226 precision (±)	0.100	pCi/L			0	0			
Sample ID: LCS-RA226-1539	Laboratory Control Sample				Run: SUB-C66769				05/30/06 16:08
Radium 226	18.7	pCi/L	0.20	147	70	130			S

Qualifiers:

RL - Analyte reporting limit.

ND - Not detected at the reporting limit.

S - Spike recovery outside of advisory limits.

ENERGY LABORATORIES, INC. • P.O. Box 30916 • 1120 South 27th Street • Billings, MT 59107-0916
800-735-4489 • 406-252-6325 • 406-252-6069 fax • eli@energylab.com

QA/QC Summary Report

Client: Alpha Analytical Labs
Project:

Report Date: 06/12/06
Work Order: B06050736

Analyte	Result	Units	RL	%REC	Low Limit	High Limit	RPD	RPDLimit	Qual
Method: RA-05									Batch: C_RA228-1264
Sample ID: LCS-228-RA226-1539	Laboratory Control Sample				Run: SUB-C66414				05/23/06 10:58
Radium 228	9.15	pCi/L	1.0	105	70	130			
Sample ID: MB-RA226-1539	Method Blank				Run: SUB-C66414				05/23/06 10:58
Radium 228	ND	pCi/L	1						
Sample ID: RB-RA226-1539	Equipment Blank				Run: SUB-C66414				05/23/06 10:58
Radium 228	ND	pCi/L	1.0		0	0			
Sample ID: C06050438-001AMS	Sample Matrix Spike				Run: SUB-C66414				05/23/06 10:58
Radium 228	15.2	pCi/L	1.0	105	70	130			
Sample ID: C06050438-001AMSD	Sample Matrix Spike Duplicate				Run: SUB-C66414				05/23/06 10:58
Radium 228	14.2	pCi/L	1.0	98	70	130	7.2	34.7	

Qualifiers:

RL - Analyte reporting limit.

ND - Not detected at the reporting limit.

Energy Laboratories Inc

DATES REPORT

12-Jun-06

Lab Order: B06050736
Client: Alpha Analytical Labs
Project:

Sample ID	Client Sample ID	Collection Date	Matrix	Test Name	TCLP Date	Prep Date Method Batch	Analysis Date
B06050736-001A	PW-00010	5/5/2006 8:20:00 AM	Drinking Water	525-Semi-Volatile Organic Compounds, SDWA		05/11/2006 E525.2 [21057]	5/16/2006
				Level 4 QA review			6/2/2006
B06050736-001B				Gross Alpha			5/26/2006
				Radium 226 + Radium 228			5/31/2006
				Radium 226 as Total			5/30/2006
				Radium 228 as Total			5/23/2006
B06050736-001C				Alkalinity			5/8/2006
				Anions by ion chromatography			5/10/2006
				Conductivity			5/8/2006
				Conductivity			5/8/2006
				Fluoride			5/8/2006
				Fluoride			5/9/2006
				pH			5/8/2006
				Solids, Total Dissolved			5/8/2006
				Supervisor Review			5/16/2006
B06050736-001D				515-Herbicides, Chlorinated SDWA		05/15/2006 E515.1 [21103]	5/21/2006
B06050736-001E				Nitrogen, Nitrate + Nitrite			5/10/2006
B06050736-001F				Hardness as CaCO3			5/10/2006
				Mercury, Drinking Water		05/09/2006 E245.1 [21023]	5/11/2006
				Metals by ICP/ICPMS, Drinking Water		05/09/2006 E200.7 [21027]	5/10/2006
				Metals by ICP/ICPMS, Drinking Water		05/09/2006 E200.7 [21027]	5/12/2006
B06050736-001G				Sulfide, Methylene Blue Colorimetric			5/10/2006
B06050736-001H				505-Pesticides, Organohalide SDWA			5/12/2006
B06050736-001I				524-Purgeable Organics, SDWA			5/15/2006
B06050736-001J				531-Pesticides, Carbamates SDWA			5/10/2006
B06050736-001K				Bacteria, Private Water Supply			5/6/2006
B06050736-002A	Trip Blank PW-00011		Trip Blank	524-Purgeable Organics, SDWA			5/15/2006

ENERGY LABORATORIES
ENERGY LABORATORIES, INC. • P.O. Box 30916 • 1120 South 27th Street • Billings, MT 59107-0916
800-735-4489 • 406-252-6325 • 406-252-6069 fax • eli@energylab.com

QC COORDINATOR

SEQ#	&Sample ID	&Test Code	&Batch ID	Comments	DF	File ID	Analysis Date/Time	BLKref	SPKref	RPDref	CCVref
2379610	B06050736-001A	SVOC-525-W-DW	21057	Used	1	/chem/SVSATURN.i/se051606.b/06MAY16012.d	5/16/06 19:53	2366830	0	0	2379599
2366868	B06051012-001G	SVOC-525-W-ALLQC	21057	Ref for Batch QC	1	/chem/SVSATURN.i/se051508.b/06MAY15012.d	5/15/06 21:50	2366830	0	0	2366826
2366869	B06051012-001GMS	SVOC-525-W-ALLQC	21057	Batch QC	1	/chem/SVSATURN.i/se051508.b/06MAY15009.d	5/15/06 19:52	2366830	2366868	0	2366826
2366870	B06051012-001GMSD	SVOC-525-W-ALLQC	21057	Batch QC	1	/chem/SVSATURN.i/se051508.b/06MAY15010.d	5/15/06 20:31	2366830	2366868	2366869	2366826
2366827	CLD_CCV_4	SVOC-525-W-ALLQC	R75782	NA	1	/chem/SVSATURN.i/se051508.b/06MAY15002.d	5/15/06 15:18	0	0	0	2366826
2379601	CLD_CCV_4	SVOC-525-W-ALLQC	R75783	NA	1	/chem/SVSATURN.i/se051606.b/06MAY16002.d	5/16/06 13:21	0	0	0	2379599
2366832	CLD-21057	SVOC-525-W-ALLQC	21057	Batch QC	1	/chem/SVSATURN.i/se051508.b/06MAY15008.d	5/15/06 19:13	2366830	2366830	0	2366826
2366831	LCS-21057	SVOC-525-W-ALLQC	21057	Batch QC	1	/chem/SVSATURN.i/se051508.b/06MAY15007.d	5/15/06 18:34	2366830	2366830	0	2366826
2366830	MB-21057	SVOC-525-W-ALLQC	21057	Batch QC	1	/chem/SVSATURN.i/se051508.b/06MAY15006.d	5/15/06 17:55	0	0	0	2366826
2366828	TOX_CCV_5	SVOC-525-W-ALLQC	R75782	NA	1	/chem/SVSATURN.i/se051508.b/06MAY15003.d	5/15/06 15:57	0	0	0	2366826
2379602	TOX_CCV_5	SVOC-525-W-ALLQC	R75783	NA	1	/chem/SVSATURN.i/se051606.b/06MAY16003.d	5/16/06 14:01	0	0	0	2379599
2366826	525+_CCV_3	SVOC-525-W-ALLQC	R75782	Sequence QC	1	/chem/SVSATURN.i/se051508.b/06MAY15001.d	5/15/06 14:38	0	0	0	2366826
2379599	525+_CCV_3	SVOC-525-W-ALLQC	R75783	Sequence QC	1	/chem/SVSATURN.i/se051606.b/06MAY16001.d	5/16/06 12:42	0	0	0	2379599
2366829	AR1660_CCV_6	SVOC-525-W-ALLQC	R75782	NA	1	/chem/SVSATURN.i/se051508.b/06MAY15004.d	5/15/06 16:36	0	0	0	2366826
2379604	AR1660_CCV_6	SVOC-525-W-ALLQC	R75783	NA	1	/chem/SVSATURN.i/se051606.b/06MAY16004.d	5/16/06 14:40	0	0	0	2379599

ENERGY LABORATORIES

ENERGY LABORATORIES, INC. • P.O. Box 30916 • 1120 South 27th Street • Billings, MT 59107-0916
800-735-4489 • 406-252-6325 • 406-252-6069 fax • eli@energylab.com

QC COORDINATOR

SEQ#	&Sample ID	&Test Code	&Batch ID	Comments	DF	File ID	Analysis Date/Time	BLKref	SPKref	RPDref	CCVref
2398909	C06050496-001B	RAD-G-ALPHA-DW	C_GrAB-0133	=B06050736	1		5/26/06 4:55	0	0	0	0
2398910	MB-R66596	RAD-G-ALPHA-DW	C_GrAB-0133	Batch QC	1		5/24/06 14:00	0	0	0	0
2398911	LCS-R66596	RAD-G-ALPHA-DW	C_GrAB-0133	Batch QC	1		5/26/06 4:54	0	0	0	0
2398912	C06050496-001BMD	RAD-G-ALPHA-DW	C_GrAB-0133	Ref for Batch QC	1		5/26/06 4:55	0	0	0	0
2398913	C06050496-001BMS	RAD-G-ALPHA-DW	C_GrAB-0133	Batch QC	1		5/26/06 4:55	0	0	0	0
2398914	C06050496-001BMSD	RAD-G-ALPHA-DW	C_GrAB-0133	Batch QC	1		5/26/06 4:55	0	0	0	0

QC COORDINATOR

SEQ#	&Sample ID	&Test Code	&Batch ID	Comments	DF	File ID	Analysis Date/Time	BLKref	SPKref	RPDref	CCVref
2398926	B06050736-001B	RAD-RA226-RA228-W	C_053106CALCFORRAD	Used	1		5/31/06 10:43	0	0	0	0

QC COORDINATOR

SEQ#	&Sample ID	&Test Code	&Batch ID	Comments	DF	File ID	Analysis Date/Time	BLKref	SPKref	RPDref	CCVref
2398920	B06050736-001B	RAD-RA226-W-T	C_RA226-1539	Used	1		5/30/06 16:03	2398923	0	0	0
2398921	C06050381-001AMS	RAD-RA226-W-T	C_RA226-1539	Batch QC	1		5/30/06 16:03	2398923	0	0	0
2398922	C06050381-001AMSD	RAD-RA226-W-T	C_RA226-1539	Batch QC	1		5/30/06 16:08	2398923	0	2398921	0
2398923	MB-RA226-1539	RAD-RA226-W-T	C_RA226-1539	Batch QC	1		5/30/06 16:08	0	0	0	0
2398924	RB-RA226-1539	RAD-RA226-W-T	C_RA226-1539	Batch QC	1		5/30/06 16:08	2398923	0	0	0
2398925	LCS-RA226-1539	RAD-RA226-W-T	C_RA226-1539	Batch QC	1		5/30/06 16:08	2398923	2398923	0	0

QC COORDINATOR

SEQ#	&Sample ID	&Test Code	&Batch ID	Comments	DF	File ID	Analysis Date/Time	BLKref	SPKref	RPDref	CCVref
2389727	B06050736-001B	RAD-RA228-W-T	C_RA228-1264	Used	1		5/23/06 12:32	2389729	0	0	0
2389728	LCS-228-RA226-1539	RAD-RA228-W-T	C_RA228-1264	Batch QC	1		5/23/06 10:58	2389729	2389729	0	0
2389729	MB-RA226-1539	RAD-RA228-W-T	C_RA228-1264	Batch QC	1		5/23/06 10:58	0	0	0	0
2389730	RB-RA226-1539	RAD-RA228-W-T	C_RA228-1264	Batch QC	1		5/23/06 10:58	2389729	0	0	0
2389731	C06050438-001AMS	RAD-RA228-W-T	C_RA228-1264	Batch QC	1		5/23/06 10:58	2389729	0	0	0
2389732	C06050438-001AMSD	RAD-RA228-W-T	C_RA228-1264		1		5/23/06 10:58	2389729	0	2389731	0

ENERGY LABORATORIES

ENERGY LABORATORIES, INC. • P.O. Box 30916 • 1120 South 27th Street • Billings, MT 59107-0916
800-735-4489 • 406-252-6325 • 406-252-6069 fax • eli@energylab.com

ENERGY LABORATORIES
ENERGY LABORATORIES, INC. • P.O. Box 30916 • 1120 South 27th Street • Billings, MT 59107-0916
800-735-4489 • 406-252-6325 • 406-252-6069 fax • el@energylab.com

QC COORDINATOR

SEQ#	&Sample ID	&Test Code	&Batch ID	Comments	DF	File ID	Analysis Date/Time	BLKref	SPKref	RPDref	CCVref
2398915	B06050736-001H	PST-505-W-DW	C_10960	used	1		5/12/06 19:51	2398917	0	0	2398919
2398916	LCS-10960	PST-505-W-DW	C_10960	Batch QC	1		5/12/06 17:05	2398917	2398917	0	2398919
2398917	MB-10960	PST-505-W-DW	C_10960	Batch QC	1		5/12/06 18:27	0	0	0	2398919
2398918	C06050497-001GMS	PST-505-W-DW	C_10960	Batch QC	1		5/13/06 0:00	0	0	0	2398919
2398919	CCV-10960	PST-505-W-DW	C_R66602	Sequence QC	1		5/13/06 4:09	0	0	0	2398919

QC COORDINATOR

SEQ#	&Sample ID	&Test Code	&Batch ID	Comments	DF	File ID	Analysis Date/Time	BLKref	SPKref	RPDref	CCVref
2380683	B06050296-001B	PST-531-W-DW	C_R65883	Ref for Batch QC	1	G:\org\HPLC2\DAT\050606_c\0509HPLC2-1B.0015.RAW	5/9/06 23:16	2380685	0	0	2380690
2389716	B06050736-001J	PST-531-W-DW	C_R65883	used	1	G:\org\HPLC2\DAT\050606_c\0509HPLC2-1B.0024.RAW	5/10/06 12:46	2389719	0	0	2389726
2391212	C06050037-002PMS	PST-531-W-DW	C_R65883	Batch QC	1	G:\org\HPLC2\DAT\050606_c\0509HPLC2-1B.0025.RAW	5/10/06 13:22	2391209	0	0	2391215
2391210	C06050365-001HMS	PST-531-W-DW	C_R65883	Batch QC	1	G:\org\HPLC2\DAT\050606_c\0509HPLC2-1B.0019.RAW	5/10/06 1:40	2391209	0	0	2391213
2391211	C06050365-001HMSD	PST-531-W-DW	C_R65883	Batch QC	1	G:\org\HPLC2\DAT\050606_c\0509HPLC2-1B.0020.RAW	5/10/06 2:16	2391209	0	2391210	2391213
2391213	CCV_02r	PST-531-W-DW	C_R65883	Sequence QC	1	G:\org\HPLC2\DAT\050606_c\0509HPLC2-1B.0002.RAW	5/9/06 15:28	2391209	0	0	2391213
2391215	CCV_21r	PST-531-W-DW	C_R65883	Sequence QC	1	G:\org\HPLC2\DAT\050606_c\0509HPLC2-1B.0022.RAW	5/10/06 3:28	2391209	0	0	2391215
2391216	CCV_30r	PST-531-W-DW	C_R65883	Sequence QC	1	G:\org\HPLC2\DAT\050606_c\0509HPLC2-1B.0030.RAW	5/10/06 16:22	2391209	0	0	2391216
2391214	ICV_05r	PST-531-W-DW	C_R65883	Sequence QC	1	G:\org\HPLC2\DAT\050606_c\0509HPLC2-1B.0005.RAW	5/9/06 17:16	2391209	0	0	2391213
2391207	LCS_03r	PST-531-W-DW	C_R65883	Batch QC	1	G:\org\HPLC2\DAT\050606_c\0509HPLC2-1B.0003.RAW	5/9/06 16:04	2391209	2391209	0	2391213
2391208	LCSD_04r	PST-531-W-DW	C_R65883	Batch QC	1	G:\org\HPLC2\DAT\050606_c\0509HPLC2-1B.0004.RAW	5/9/06 16:40	2391209	2391209	2391207	2391213
2391209	MBLK_06r	PST-531-W-DW	C_R65883	Batch QC	1	G:\org\HPLC2\DAT\050606_c\0509HPLC2-1B.0006.RAW	5/9/06 17:52	0	0	0	2391213

QC COORDINATOR

SEQ#	Sample ID	Test Code	Batch ID	Comments	DF	File ID	Analysis Date/Time	BLKref	SPKref	RPDref	CCVref
2356706	B06050736-001C	CL+SO4-IC-W	R75525	used	1		5/10/06 13:04	2356688	0	0	2356702
2356700	B06050720-002B	CL+SO4-IC-W	R75525	ref for Sequence QC	1		5/10/06 12:05	2356688	0	0	0
2356701	B06050720-002BMS	CL+SO4-IC-W	R75525	Sequence QC	1.1		5/10/06 12:17	2356686	2356700	0	0
2356704	B06050720-002BMSD	CL+SO4-IC-W	R75525	Sequence QC	1.1		5/10/06 12:52	2356686	2356700	2356701	2356702
2356716	B06050916-001A	CL+SO4-IC-W	R75525	ref for Sequence QC	1		5/10/06 15:11	2356686	0	0	2356714
2356717	B06050916-001AMS	CL+SO4-IC-W	R75525	Sequence QC	1.1		5/10/06 15:23	2356686	2356716	0	2356714
2356718	B06050916-001AMSD	CL+SO4-IC-W	R75525	Sequence QC	1.1		5/10/06 15:35	2356686	2356716	2356717	2356714
2356703	CCB	CL+SO4-IC-W	R75525	Sequence QC	1		5/10/06 12:40	2356686	0	0	2356702
2356715	CCB	CL+SO4-IC-W	R75525	Sequence QC	1		5/10/06 15:09	2356686	0	0	2356714
2356727	CCB	CL+SO4-IC-W	R75525	Sequence QC	1		5/10/06 17:19	2356686	0	0	2356726
2356702	CCV	CL+SO4-IC-W	R75525	Sequence QC	1		5/10/06 12:29	2356686	0	0	2356702
2356714	CCV	CL+SO4-IC-W	R75525	Sequence QC	1		5/10/06 14:48	2356686	0	0	2356714
2356726	CCV	CL+SO4-IC-W	R75525	Sequence QC	1		5/10/06 17:08	2356686	0	0	2356726
2356686	ICB	CL+SO4-IC-W	R75525	Sequence QC	1		5/10/06 10:21	0	0	0	0
2356685	ICV	CL+SO4-IC-W	R75525	Sequence QC	1		5/10/06 10:09	2356686	0	0	0
2356687	LFB	CL+SO4-IC-W	R75525	Sequence QC	1.04		5/10/06 10:32	2356686	2356686	0	0
2356681	STD 7	CL+SO4-IC-W	R75525	Calibration	1		5/9/06 12:33	2356686	0	0	0
2356682	STD 8	CL+SO4-IC-W	R75525	Calibration	1		5/9/06 12:45	2356686	0	0	0
2356674	STD0-CRI	CL+SO4-IC-W	R75525	Low point	1		5/9/06 11:12	2356686	0	0	0
2356675	STD1	CL+SO4-IC-W	R75525	Calibration	1		5/9/06 11:23	2356686	0	0	0
2356676	STD2	CL+SO4-IC-W	R75525	Calibration	1		5/9/06 11:35	2356686	0	0	0
2356677	STD3	CL+SO4-IC-W	R75525	Calibration	1		5/9/06 11:47	2356686	0	0	0
2356678	STD4	CL+SO4-IC-W	R75525	Calibration	1		5/9/06 11:58	2356686	0	0	0
2356679	STD5	CL+SO4-IC-W	R75525	Calibration	1		5/9/06 12:10	2356686	0	0	0
2356680	STD6	CL+SO4-IC-W	R75525	Calibration	1		5/9/06 12:21	2356686	0	0	0

ENERGY LABORATORIES

ENERGY LABORATORIES, INC. • P.O. Box 30916 • 1120 South 27th Street • Billings, MT 59107-0916
800-735-4489 • 406-252-6325 • 406-252-6069 fax • eli@energylab.com

ENERGY LABORATORIES
ENERGY LABORATORIES, INC. • P.O. Box 30916 • 1120 South 27th Street • Billings, MT 59107-0916
800-735-4489 • 406-252-6325 • 406-252-6069 fax • eli@energylab.com

QC COORDINATOR

SEQ#	&Sample ID	&Test Code	&Batch ID	Comments	DF	File ID	Analysis Date/Time	BLKref	SPKref	RPDref	CCVref
2350131	B06050736-001C	ALK-W	R75338	used	1		5/8/06 19:46	2350093	0	0	0
2350122	10BUFFER	ALK-W	R75338	Sequence QC	1		5/8/06 19:10	2350093	0	0	0
2352484	10BUFFER	ALK-W	R75404	Sequence QC	1		5/9/06 15:15	0	0	0	0
2350095	B06050454-003B	ALK-W	R75338	Ref for Batch QC	1		5/8/06 17:35	2350093	0	0	0
2350097	B06050454-003BMS	ALK-W	R75338	Batch QC	1		5/8/06 17:43	2350093	2350095	0	0
2350098	B06050454-003BMSD	ALK-W	R75338	Batch QC	1		5/8/06 17:49	2350093	2350095	2350097	0
2350110	B06050720-001B	ALK-W	R75338	Ref for Batch QC	1		5/8/06 18:38	2350093	0	0	0
2350114	B06050720-001BMS	ALK-W	R75338	Batch QC	1		5/8/06 18:52	2350093	2350110	0	0
2350119	B06050720-001BMSD	ALK-W	R75338	Batch QC	1		5/8/06 19:06	2350093	2350110	2350114	0
2350094	LCS	ALK-W	R75338	Batch QC	1		5/8/06 17:28	2350093	2350108	0	0
2350093	MB	ALK-W	R75338	Batch QC	1		5/8/06 17:22	0	0	0	0

QC COORDINATOR

SEQ#	&Sample ID	&Test Code	&Batch ID	Comments	DF	File ID	Analysis Date/Time	BLKref	SPKref	RPDref	CCVref
2349400	B06050736-001C	COND-PRO3E-W	R75338	used	1		5/8/06 12:17	0	0	0	0
2349394	B06050454-004B	COND-PRO3E-W	R75338	ref for batch QC	1		5/8/06 12:08	0	0	0	0
2349395	B06050454-004BDUP	COND-PRO3E-W	R75338	Batch QC	1		5/8/06 12:10	0	0	2349394	0
2350111	B06050720-001B	COND-PRO3E-W	R75338	ref for batch QC	1		5/8/06 18:38	0	0	0	0
2350115	B06050720-001BMS	COND-PRO3E-W	R75338	Batch QC	1		5/8/06 18:52	0	2349390	0	0
2350120	B06050720-001BMSD	COND-PRO3E-W	R75338	Batch QC	1		5/8/06 19:06	0	2349390	2350115	0
2349386	RB	COND-PRO3E-W	R75338	Batch QC	1		5/8/06 11:50	0	0	0	0
2349403	1413STD	COND-PRO3E-W	R75338	sequence QC	1		5/8/06 12:23	0	0	0	0
2349387	150STD	COND-PRO3E-W	R75338	Batch QC	1		5/8/06 11:51	0	0	0	0
2350124	150STD	COND-PRO3E-W	R75338		1		5/8/06 19:11	0	0	0	0
2349388	5000STD	COND-PRO3E-W	R75338	Batch QC	1		5/8/06 11:53	0	0	0	0

QC COORDINATOR

SEQ#	&Sample ID	&Test Code	&Batch ID	Comments	DF	File ID	Analysis Date/Time	BLKref	SPKref	RPDref	CCVref
2353498	B06050720-001B	F-ISE-W	R75404	ref for Batch QC	1		5/9/06 18:40	2353496	0	0	0
2353499	B06050720-001BMS	F-ISE-W	R75404	batch QC	1		5/9/06 18:47	2353496	2353498	0	0
2353500	B06050720-001BMSD	F-ISE-W	R75404	batch QC	1		5/9/06 18:54	2353496	2353498	2353499	0
2353501	B06050736-001C	F-ISE-W	R75404	used	1		5/9/06 19:01	2353496	0	0	0
2353527	CCB	F-ISE-W	R75404	sequence QC	1		5/9/06 20:33	2353496	0	0	2353526
2353526	CCV	F-ISE-W	R75404	sequence QC	1		5/9/06 20:26	2353496	0	0	2353526
2353495	ICV	F-ISE-W	R75404	batch QC	1		5/9/06 18:20	2353496	0	0	0
2353497	LFB	F-ISE-W	R75404	batch QC	1		5/9/06 18:29	2353496	2353496	0	0
2353496	MB	F-ISE-W	R75404	batch QC	1		5/9/06 18:27	0	0	0	0

QC COORDINATOR

SEQ#	&Sample ID	&Test Code	&Batch ID	Comments	DF	File ID	Analysis Date/Time	BLKref	SPKref	RPDref	CCVref
2350134	B06050736-001C	PH-W	R75338	Used	1		5/8/06 19:46	0	0	0	0
2350138	pH buffer check	PH-W	R75338	Ending pH buffer check not done	1		5/8/06 20:07	0	0	0	2350135
2349402	10BUFFER	PH-W	R75338	Sequence QC	1		5/8/06 12:21	0	0	0	0
2350123	10BUFFER	PH-W	R75338	Sequence QC	1		5/8/06 19:10	0	0	0	0
2349389	2ND7BUFFER	PH-W	R75338	Batch QC	1		5/8/06 11:56	0	0	0	0
2349393	4BUFFER	PH-W	R75338	Batch QC	1		5/8/06 12:07	0	0	0	0

ENERGY LABORATORIES
ENERGY LABORATORIES, INC. • P.O. Box 30916 • 1120 South 27th Street • Billings, MT 59107-0916
800-735-4489 • 406-252-6325 • 406-252-6069 fax • eli@energylab.com

QC COORDINATOR

SEQ#	Sample ID	Test Code	Batch ID	Comments	DF	File ID	Analysis Date/Time	BLKref	SPKref	RPDref	CCVref
2351242	B06050736-001C	SLDS-TDS-W	TDS060508A	used	1		5/8/06 11:53	2351232	0	0	0
2351234	B06050712-001A	SLDS-TDS-W	TDS060508A	ref for batch QC	1		5/8/06 11:24	2351232	0	0	0
2351235	B06050712-001A MS	SLDS-TDS-W	TDS060508A	Batch QC	1		5/8/06 11:24	2351232	2351234	0	0
2351236	B06050712-001A MSD	SLDS-TDS-W	TDS060508A	Batch QC	1		5/8/06 11:25	2351232	2351234	2351235	0
2351233	LFB1	SLDS-TDS-W	TDS060508A	Incorrect QC type	1		5/8/06 11:20	2351232	0	0	0
2351232	MBLK1	SLDS-TDS-W	TDS060508A		1		5/8/06 11:19	0	0	0	0

QC COORDINATOR

SEQ#	Sample ID	Test Code	Batch ID	Comments	DF	File ID	Analysis Date/Time	BLKref	SPKref	RPDref	CCVref
2349989	B06050736-001K	BCT-PA-W-DW	R75361	used	1		5/8/06 10:00	0	0	0	0

ENERGY LABORATORIES
ENERGY LABORATORIES, INC. • P.O. Box 30916 • 1120 South 27th Street • Billings, MT 59107-0916
800-735-4489 • 406-252-6325 • 406-252-6069 fax • eli@energylab.com

SEQ#	&Sample ID	&Test Code	&Batch ID	Comments	DF	File ID	Analysis Date/Time	BLKref	SPKref	RPDref	CCVref
2382717	B06050736-001D	HRB-515-W-DW	21103	used	1	/chem/CECD.i/C052006b/C0520_037.0037.d	5/21/06 1:00	2382734	0	0	2382712
2382713	LCS-21103	HRB-515-W-DW	21103	Batch QC	1	/chem/CECD.i/C052006b/C0520_032.0032.d	5/20/06 22:33	2382734	2382734	0	2382712
2382734	MB-21103	HRB-515-W-DW	21103	Batch QC	1	/chem/CECD.i/C052006b/C0520_065.0065.d	5/21/06 14:46	0	0	0	2382728
2382711	8151CK5	HRB-515-W-DW	R76164		1	/chem/CECD.i/C052006b/C0520_029.0029.d	5/20/06 21:05	0	0	0	2382711
2382718	8151CK5	HRB-515-W-DW	R76164		1	/chem/CECD.i/C052006b/C0520_040.0040.d	5/21/06 2:28	0	0	0	2382718
2382736	8151CK5	HRB-515-W-DW	R76164		1	/chem/CECD.i/C052006b/C0520_069.0069.d	5/21/06 16:44	0	0	0	2382736
2382712	8151CK8	HRB-515-W-DW	R76164	Sequence QC	1	/chem/CECD.i/C052006b/C0520_030.0030.d	5/20/06 21:34	0	0	0	2382712
2382719	8151CK8	HRB-515-W-DW	R76164	Sequence QC	1	/chem/CECD.i/C052006b/C0520_041.0041.d	5/21/06 2:57	0	0	0	2382719
2382728	8151CK8	HRB-515-W-DW	R76164	Sequence QC	1	/chem/CECD.i/C052006b/C0520_051.0051.d	5/21/06 7:52	0	0	0	2382728
2382737	8151CK8	HRB-515-W-DW	R76164	Sequence QC	1	/chem/CECD.i/C052006b/C0520_070.0070.d	5/21/06 17:13	0	0	0	2382737
2382714	B06050552-001I	HRB-515-W-DW	21103	Ref for Batch QC	1	/chem/CECD.i/C052006b/C0520_034.0034.d	5/20/06 23:32	2382734	0	0	2382712
2382715	B06050552-001IMS	HRB-515-W-DW	21103	Batch QC	1	/chem/CECD.i/C052006b/C0520_035.0035.d	5/21/06 0:01	2382734	2382714	0	2382712
2382716	B06050552-001IMSD	HRB-515-W-DW	21103	Batch QC	1	/chem/CECD.i/C052006b/C0520_036.0036.d	5/21/06 0:30	2382734	2382714	2382715	2382712

ENERGY LABORATORIES
ENERGY LABORATORIES, INC. • P.O. Box 30916 • 1120 South 27th Street • Billings, MT 59107-0916
800-735-4489 • 406-252-6325 • 406-252-6069 fax • eli@energylab.com

QC COORDINATOR

SEQ#	&Sample ID	&Test Code	&Batch ID	Comments	DF	File ID	Analysis Date/Time	BLKref	SPKref	RPDref	CCVref
2354546	B06050736-001E	N-NO3+NO2-DW	R75462	used	1		5/10/06 9:50	2354541	0	0	0
2354547	B06050736-001EMS	N-NO3+NO2-DW	R75462	Batch QC	1		5/10/06 9:51	2354541	2354546	0	0
2354548	B06050736-001EMSD	N-NO3+NO2-DW	R75462	Batch QC	1		5/10/06 9:52	2354541	2354546	2354547	0
2354558	CCB	N-NO3+NO2-W	R75462	Sequence QC	1		5/10/06 10:04	2354541	0	0	0
2354559	CCV	N-NO3+NO2-W	R75462	Sequence QC	1		5/10/06 10:05	2354541	0	0	2354559
2354543	CRA 0.01	N-NO3+NO2-W	R75462	Sequence QC	1		5/10/06 9:46	2354541	0	0	0
2354544	CRA 10.0	N-NO3+NO2-W	R75462	Sequence QC	1		5/10/06 9:47	2354541	0	0	0
2354540	ICV	N-NO3+NO2-W	R75462	Sequence QC	6		5/10/06 9:43	2354541	0	0	0
2354542	LFB	N-NO3+NO2-W	R75462	Batch QC	1		5/10/06 9:45	2354541	2354541	0	0
2354541	MBLK	N-NO3+NO2-W	R75462	Batch QC	1		5/10/06 9:44	0	0	0	0
2354539	N+N	N-NO3+NO2-W	R75462	Sequence QC	1		5/10/06 9:41	2354541	0	0	0
2354538	NO2	N-NO3+NO2-W	R75462	Sequence QC	1		5/10/06 9:40	2354541	0	0	0
2354533	Standard 1	N-NO3+NO2-W	R75462	Calibrate	1		5/10/06 9:33	2354541	0	0	0
2354534	Standard 2	N-NO3+NO2-W	R75462	Calibrate	1		5/10/06 9:35	2354541	0	0	0
2354535	Standard 3	N-NO3+NO2-W	R75462	Calibrate	1		5/10/06 9:36	2354541	0	0	0
2354536	Standard 4	N-NO3+NO2-W	R75462	Calibrate	1		5/10/06 9:37	2354541	0	0	0
2354537	Standard 5	N-NO3+NO2-W	R75462	Calibrate	1		5/10/06 9:38	2354541	0	0	0

ENERGY LABORATORIES
ENERGY LABORATORIES, INC. • P.O. Box 30916 • 1120 South 27th Street • Billings, MT 59107-0916
800-735-4489 • 406-252-6325 • 406-252-6069 fax • eli@energylab.com

QC COORDINATOR

SEQ#	&Sample ID	&Test Code	&Batch ID	Comments	DF	File ID	Analysis Date/Time	BLKref	SPKref	RPDref	CCVref
2356272	B06050736-001F	200.7.8-W-DW	21027	Used	1		5/10/06 15:56	2356267	0	0	2356264
2356274	B06050742-001C	200.7.8-W-DW	21027	Ref for Batch QC	1		5/10/06 16:03	2356267	0	0	2356264
2356275	B06050742-001C MS1	200.7.8-W-T	21027	Batch QC	1		5/10/06 16:06	2356267	2356274	0	2356264
2356278	B06050742-001C MSD1	200.7.8-W-T	21027	Batch QC	1		5/10/06 16:17	2356267	2356274	2356275	2356276
2356282	B06050765-001B	200.7.8-W-TR	21027	Ref for QC	1		5/10/06 16:31	2356267	0	0	2356276
2356283	B06050765-001BDIL	200.7.8-W-TR	21027	Sequence QC	5		5/10/06 16:35	2356267	0	2356282	2356276
2356284	B06050765-002B	200.7.8-W-TR	21027		1		5/10/06 16:38	2356267	0	0	2356276
2356285	B06050771-002A	200.7.8-W-T	21027	Ref for Batch QC	1		5/10/06 16:42	2356267	0	0	2356276
2356286	B06050771-002A MS3	200.7.8-W-T	21027	Batch QC	1		5/10/06 16:46	2356267	2356285	0	2356276
2356287	B06050771-002A MSD3	200.7.8-W-T	21027	Batch QC	1		5/10/06 16:49	2356267	2356285	2356286	2356276
2356210	Calblank	ICP-200.7-W-D	R75522	ICP262-B	1		5/10/06 12:12	2356226	0	0	0
2356261	Calblank	ICP-200.7-W-D	R75522	re-calibrate	1		5/10/06 15:13	2356226	0	0	2356259
2356215	CCB	ICP-200.7-W-D	R75522	Sequence QC	1		5/10/06 12:31	2356226	0	0	0
2356265	CCB	ICP-200.7-W-D	R75522	Sequence QC	1		5/10/06 15:31	2356226	0	0	2356264
2356277	CCB	ICP-200.7-W-D	R75522	Sequence QC	1		5/10/06 16:13	2356226	0	0	2356276
2356289	CCB	ICP-200.7-W-D	R75522	Sequence QC	1		5/10/06 16:55	2356226	0	0	2356288
2356264	CCV	ICP-200.7-W-D	R75522	Sequence QC	1		5/10/06 15:27	2356226	0	0	2356264
2356276	CCV	ICP-200.7-W-D	R75522	Sequence QC	1		5/10/06 16:10	2356226	0	0	2356276
2356288	CCV	ICP-200.7-W-D	R75522	Sequence QC	1		5/10/06 16:53	2356226	0	0	2356288
2356216	CRI	ICP-200.7-W-D	R75522	Sequence QC	1		5/10/06 12:35	2356226	0	0	0
2356217	ICSA	ICP-200.7-W-D	R75522	Sequence QC	1		5/10/06 12:39	2356226	0	0	0
2356218	ICSAB	ICP-200.7-W-D	R75522	Sequence QC	1		5/10/06 12:42	2356226	0	0	0
2356214	ICV	ICP-200.7-W-D	R75522	Sequence QC	1		5/10/06 12:28	2356226	0	0	0
2356269	LCS1-21027	200.7.8-W-T	21027	Batch QC	1		5/10/06 15:45	2356267	2356267	0	2356264
2356270	LCS3-21027	200.7.8-W-T	21027	Batch QC	1		5/10/06 15:48	2356267	2356267	0	2356264
2356267	MB-21027	200.7.8-W-T	21027	Batch QC	1		5/10/06 15:38	0	0	0	2356264
2356268	MB2-21027	200.7.8-W-T	21027	Batch QC	1		5/10/06 15:41	2356267	0	0	2356264
2356212	METALS HIGH	ICP-200.7-W-D	R75522	Calibrate	1		5/10/06 12:19	2356226	0	0	0
2356263	METALS HIGH	ICP-200.7-W-D	R75522	re-calibrate	1		5/10/06 15:23	2356226	0	0	2356259
2356211	METALS LOW	ICP-200.7-W-D	R75522	Calibrate	1		5/10/06 12:16	2356226	0	0	0
2356262	METALS LOW	ICP-200.7-W-D	R75522	re-calibrate	1		5/10/06 15:20	2356226	0	0	2356259
2356213	QCS	ICP-200.7-W-D	R75522	Sequence QC	1		5/10/06 12:24	2356226	0	0	0

ENERGY LABORATORIES
ENERGY LABORATORIES, INC. • P.O. Box 30916 • 1120 South 27th Street • Billings, MT 59107-0916
800-735-4489 • 406-252-6325 • 406-252-6069 fax • eli@energylab.com

QC COORDINATOR

SEQ#	Sample ID	Test Code	Batch ID	Comments	DF	File ID	Analysis Date/Time	BLKref	SPKref	RPDref	CCVref
2359088	B06050736-001F	200.7.8-W-DW	21027	Used	1		5/12/06 4:50	2358327	0	0	2359080
2358335	B06050742-001C	200.7.8-W-TR	21027	ref for Batch QC	1		5/11/06 14:0'	2358327	0	0	2358333
2358336	B06050742-001C MS1	200.7.8-W-TR	21027	Batch QC	1		5/11/06 14:09	2358327	2358335	0	2358333
2358337	B06050742-001C MSD1	200.7.8-W-TR	21027	Batch QC	1		5/11/06 14:17	2358327	2358335	2358336	2358333
2358312	Cal Blank	ICPMS-200.8-W-D	R75567	Initial Cal	1		5/11/06 11:00	2358324	0	0	0
2359045	Cal Blank	ICPMS-200.8-W-D	R75567	recalibrate	1		5/11/06 22:47	2358324	0	0	2359043
2358318	CCB	ICPMS-200.8-W-D	R75567	sequence QC	1		5/11/06 11:47	2358324	0	0	0
2358332	CCB	ICPMS-200.8-W-D	R75567	sequence QC	1		5/11/06 13:37	2358324	0	0	2358320
2358989	CCB	ICPMS-200.8-W-D	R75567	sequence QC	1		5/11/06 15:27	2358324	0	0	2358333
2359042	CCB	ICPMS-200.8-W-D	R75567		1		5/11/06 22:23	2358324	0	0	2359032
2359052	CCB	ICPMS-200.8-W-D	R75567	sequence QC	1		5/11/06 23:43	2358324	0	0	2359050
2359079	CCB	ICPMS-200.8-W-D	R75567	sequence QC	1		5/12/06 3:15	2358324	0	0	2359066
2359090	CCB	ICPMS-200.8-W-D	R75567	sequence QC	1		5/12/06 5:06	2358324	0	0	2359080
2358333	CCV - ME060130E,ME050222A,ME	ICPMS-200.8-W-D	R75567	sequence QC	1		5/11/06 13:45	2358324	0	0	2358333
2358990	CCV - ME060130E,ME050222A,ME	ICPMS-200.8-W-D	R75567	sequence QC	1		5/11/06 15:35	2358324	0	0	2358990
2359043	CCV - ME060130E,ME050222A,ME	ICPMS-200.8-W-D	R75567		1		5/11/06 22:31	2358324	0	0	2359043
2359050	CCV - ME060130E,ME050222A,ME	ICPMS-200.8-W-D	R75567	sequence QC	1		5/11/06 23:27	2358324	0	0	2359050
2359080	CCV - ME060130E,ME050222A,ME	ICPMS-200.8-W-D	R75567	sequence QC	1		5/12/06 3:23	2358324	0	0	2359080
2359091	CCV - ME060130E,ME050222A,ME	ICPMS-200.8-W-D	R75567	sequence QC	1		5/12/06 5:14	2358324	0	0	2359091
2358319	CRI - ME060130E,ME050222A,ME	ICPMS-200.8-W-D	R75567	sequence QC	1		5/11/06 11:55	2358324	0	0	0
2358321	ICSA	ICPMS-200.8-W-D	R75567	sequence QC	1		5/11/06 12:11	2358324	0	0	2358320
2358322	ICSAB	ICPMS-200.8-W-D	R75567	sequence QC	1		5/11/06 12:19	2358324	0	0	2358320
2358328	LCS1-21027	200.7.8-W-TR	21027	Batch QC	1		5/11/06 13:06	2358327	2358327	0	2358320
2358325	LFB	ICPMS-200.8-W-D	R75567	sequence QC	1		5/11/06 12:43	2358324	2358324	0	2358320
2358324	LRB	ICPMS-200.8-W-D	R75567	sequence QC	1		5/11/06 12:35	0	0	0	2358320
2358327	MB-21027	200.7.8-W-TR	21027	Batch QC	1		5/11/06 12:58	0	0	0	2358320
2358316	OCS - ME060230I,ME060230H,ME 050621C	ICPMS-200.8-W-D	R75567	sequence QC	1		5/11/06 11:31	2358324	0	0	0
2359049	OCS - ME060230I,ME060230H,ME 050621C	ICPMS-200.8-W-D	R75567	sequence QC	1		5/11/06 23:19	2358324	0	0	2359043
2358313	10 ppb std - ME060130E,ME050222A,ME 050621B	ICPMS-200.8-W-D	R75567	Initial Cal	1		5/11/06 11:08	2358324	0	0	0
2359046	10 ppb std - ME060130E,ME050222A,ME 050621B	ICPMS-200.8-W-D	R75567	recalibrate	1		5/11/06 22:55	2358324	0	0	2359043
2358315	100 ppb std - ME060130E,ME050222A,ME 050621B	ICPMS-200.8-W-D	R75567	Initia Cal	1		5/11/06 11:24	2358324	0	0	0
2359048	100 ppb std - ME060130E,ME050222A,ME 050621B	ICPMS-200.8-W-D	R75567	recalibrate	1		5/11/06 23:11	2358324	0	0	2359043
2358314	50 ppb std - ME060130E,ME050222A,ME 050621B	ICPMS-200.8-W-D	R75567	Initia Cal	1		5/11/06 11:16	2358324	0	0	0
2359047	50 ppb std - ME060130E,ME050222A,ME 050621B	ICPMS-200.8-W-D	R75567	recalibrate	1		5/11/06 23:03	2358324	0	0	2359043

ENERGY LABORATORIES
ENERGY LABORATORIES, INC. • P.O. Box 30916 • 1120 South 27th Street • Billings, MT 59107-0916
800-735-4489 • 406-252-6325 • 406-252-6069 fax • eli@energylab.com

QC COORDINATOR

SEQ#	&Sample ID	&Test Code	&Batch ID	Comments	DF	File ID	Analysis Date/Time	BLKref	SPKref	RPDref	CCVref
2358226	B06050736-001F	CVAA-HG-245-W-DW	21023	Used	1		5/11/06 12:02	2357713	0	0	2358216
2357720	B06050641-001B	CVAA-HG-245-W-T	21023	Ref for Batch QC	1		5/11/06 11:12	2357713	0	0	2357716
2357721	B06050641-001BMS	CVAA-HG-245-W-T	21023	batch QC	1		5/11/06 11:14	2357713	2357720	0	2357716
2357722	B06050641-001BMSD	CVAA-HG-245-W-T	21023	batch QC	1		5/11/06 11:16	2357719	2357720	2357721	2357716
2358223	B06050720-001C	CVAA-HG-245-W-TR	21023	Ref for Batch QC	1		5/11/06 11:54	2357718	0	0	2358216
2358224	B06050720-001CMS	CVAA-HG-245-W-TR	21023	batch QC	1		5/11/06 11:57	2358243	2358223	0	2358216
2358225	B06050720-001CMSD	CVAA-HG-245-W-TR	21023	batch QC	1		5/11/06 11:59	2358243	2358223	2358224	2358216
2357717	CCB	CVAA-HG-245-W-T	R75543	sequence QC	1		5/11/06 11:05	0	0	0	2357716
2357728	CCB	CVAA-HG-245-W-T	R75543	sequence QC	1		5/11/06 11:31	0	0	0	2357727
2357731	CCB	CVAA-HG-245-W-T	R75543	sequence QC	1		5/11/06 11:40	0	0	0	2357730
2358229	CCB	CVAA-HG-245-W-DW	R75543	sequence QC	1		5/11/06 12:09	2358243	0	0	2358228
2357716	CCV	CVAA-HG-245-W-T	R75543	sequence QC	1		5/11/06 11:02	2357717	0	0	2357716
2357727	CCV	CVAA-HG-245-W-T	R75543	sequence QC	1		5/11/06 11:28	0	0	0	2357727
2357730	CCV	CVAA-HG-245-W-T	R75543	sequence QC	1		5/11/06 11:33	0	0	0	2357730
2358228	CCV	CVAA-HG-245-W-DW	R75543	sequence QC	1		5/11/06 12:03	2358243	0	0	2358228
2357719	LCS-21023	CVAA-HG-245-W-T	21023	batch QC	1		5/11/06 11:03	2357718	2357718	0	2357716
2357718	MB-21023	CVAA-HG-245-W-T	21023	batch QC	1		5/11/06 11:07	0	0	0	2357716
2357715	QCS	CVAA-HG-245-W-T	R75543	sequence QC	1		5/11/06 11:00	2357717	2357717	0	2357714

ENERGY LABORATORIES
ENERGY LABORATORIES, INC. • P.O. Box 30916 • 1120 South 27th Street • Billings, MT 59107-0916
800-735-4489 • 406-252-6325 • 406-252-6069 fax • eli@energylab.com

QC COORDINATOR

SEQ#	&Sample ID	&Test Code	&Batch ID	Comments	DF	File ID	Analysis Date/Time	BLKref	SPKref	RPDref	CCVref
2357600	B06050736-001C	BALANCE-W	R75523	CALCS	1	0	5/11/06 11:53	0	0	0	0
2357601	B06050736-001C	SLDS-TDS-W-CALC	R75523	CALCS	1	0	5/11/06 11:53	0	0	0	0
2357602	B06050736-001F	HRDNESS-CALC-W	R75523	CALCS	1	0	5/10/06 15:56	0	0	0	0
2357603	B06050736-001C	HRDNESS-GRAINS-W	R75523	CALCS	1	0	5/10/06 15:56	0	0	0	0
2357604	B06050736-001C	RESISTIVITY-W	R75523	CALCS	1	0	5/8/06 12:17	0	0	0	0
2357605	B06050736-001C	SALINITY	R75523	CALCS	1	0	5/8/06 12:17	0	0	0	0
2357606	B06050736-001C	CL AS NACL	R75523	CALCS	1	0	5/10/06 13:04	0	0	0	0
2357607	B06050736-001F	SAR-CALC-W	R75523	CALCS	1	0	5/10/06 15:53	0	0	0	0
2357608	B06050736-001C	LANGELIER-CALC-W	R75523	CALCS	1	0	5/11/06 11:53	0	0	0	0
2357609	B06050736-001C	RYZNAR-CALC-W	R75523	CALCS	1	0	5/11/06 11:53	0	0	0	0
2357610	B06050736-001C	AGGRESSIVE INDEX-CALC-W	R75523	CALCS	1	0	5/11/06 11:53	0	0	0	0

ENERGY LABORATORIES
ENERGY LABORATORIES, INC. • P.O. Box 30916 • 1120 South 27th Street • Billings, MT 59107-0916
800-735-4489 • 406-252-6325 • 406-252-6069 fax • el@energylab.com

QC COORDINATOR

SEQ#	&Sample ID	&Test Code	&Batch ID	Comments	DF	File ID	Analysis Date/Time	BLKref	SPKref	RPDref	CCVref
2354415	B06050736-001G	SULFIDE-MB-W	060510A-SULFIDE-MB-W	used	1		5/10/06 9:00	0	0	0	0
2354407	B06050496-001D	SULFIDE-MB-W	060510A-SULFIDE-MB-W	Ref for Batch QC	1		5/10/06 9:00	0	0	0	0
2354408	B06050496-001DDUP	SULFIDE-MB-W	060510A-SULFIDE-MB-W	batch QC	1		5/10/06 9:00	0	0	2354407	0
2354409	B06050560-001D	SULFIDE-MB-W	060510A-SULFIDE-MB-W	Ref for Batch QC	1		5/10/06 9:00	0	0	0	0
2354410	B06050560-001DMS	SULFIDE-MB-W	060510A-SULFIDE-MB-W	batch QC	1		5/10/06 9:00	0	2354409	0	0
2354411	B06050560-001DMSD	SULFIDE-MB-W	060510A-SULFIDE-MB-W	batch QC	1		5/10/06 9:00	0	2354409	2354410	0
2354420	LFB1_060510A	SULFIDE-MB-W	060510A-SULFIDE-MB-W	batch QC	1		5/10/06 9:00	0	0	0	0

ENERGY LABORATORIES, INC. • P.O. Box 30916 • 1120 South 27th Street • Billings, MT 59107-0916
800-735-4489 • 406-252-6325 • 406-252-6069 fax • eli@energylab.com

QC COORDINATOR

SEQ#	Sample ID	Test Code	Batch ID	Comments	DF	File ID	Analysis Date/Time	BLKref	SPKref	RPDref	CCVref
2371869	B06050736-001I	VOC-524-W-DW	R75900	Used	1	/chem/VOASATURN.i/ve051506b.b/15NAY6012.d	5/15/06 18:53	2371866	0	0	2371864
2371870	B06050736-002A	VOC-524-W-DW	R75900	used	1	/chem/VOASATURN.i/ve051506b.b/15NAY6013.d	5/15/06 20:25	2371866	0	0	2371864
2371868	B06051012-001D	VOC-524-W-DW	R75900		1	/chem/VOASATURN.i/ve051506b.b/15NAY6011.d	5/15/06 19:21	2371866	0	2360791	2371864
2371867	B06051012-002A	VOC-524-W-DW	R75900		1	/chem/VOASATURN.i/ve051506b.b/15NAY6010.d	5/15/06 18:49	2371866	0	0	2371864
2371864	CCV	VOC-524-W-DW	R75900	Need Sequence Log	1	/chem/VOASATURN.i/ve051506b.b/15NAY6006.d	5/15/06 16:20	2371866	0	0	2371864
2371865	LCS	VOC-524-W-DW	R75900		1	/chem/VOASATURN.i/ve051506b.b/15NAY6007.d	5/15/06 16:52	2371866	2371866	0	2371864
2371866	MBLK	VOC-524-W-DW	R75900		1	/chem/VOASATURN.i/ve051506b.b/15NAY6009.d	5/15/06 18:16	0	0	0	2371864

Energy Laboratories Inc

Sample Receipt Checklist

Client Name **Alpha Analytical Labs** Date and Time Received: **5/8/2006**

Work Order Number **B06050736** Received by sba

Login completed by: Samuel B. Anderson (Signature) 5/8/2006 (Date) Reviewed by Denise Ruby (Initials) 5/8/2006 (Date)

Carrier name FedEx 5/5/06

Shipping container/cooler in good condition?	Yes ☑	No ☐	Not Present ☐
Custody seals intact on shipping container/cooler?	Yes ☑	No ☐	Not Present ☐
Custody seals intact on sample bottles?	Yes ☐	No ☐	Not Present ☑
Chain of custody present?	Yes ☑	No ☐	
Chain of custody signed when relinquished and received?	Yes ☑	No ☐	
Chain of custody agrees with sample labels?	Yes ☑	No ☐	
Samples in proper container/bottle?	Yes ☑	No ☐	
Sample containers intact?	Yes ☑	No ☐	
Sufficient sample volume for indicated test?	Yes ☑	No ☐	
All samples received within holding time?	Yes ☑	No ☐	
Container/Temp Blank temperature in compliance?	Yes ☑	No ☐	4 °C On Ice
Water - VOA vials have zero headspace?	Yes ☑	No ☐	No VOA vials submitted ☐
Water - pH acceptable upon receipt?	Yes ☑	No ☐	Not Applicable ☐

Adjusted? Checked by

Contact and Corrective Action Comments:

None

Chain of Custody Record

From: CDM
60 Port Blvd, Ste. 200
Libby, MT 59923

Libby Asbestos Investigation
U.S. Environmental Protection Agency, Region VIII
999 18th Street, Suite 300
Denver, CO 80202-2413

No. L10369

Send to: Energy
1120 S 27th St
Billings, MT 59101

via: ☐ hand delivery ☑ shipped

Date Shipped: 5/5/2006
Carrier Name: Fed-Ex
Airbill: 856790494875

Sample Placed in Cooler/Bag	Index ID	Suffix ID	Sample Date	Sample Media (S=Soil; W=Water; D=Dust, A=Air, B=Bulk Insulation)	Volume (L) or Area (cm2)	Filter Pore Size (um)	Turn Around Time	Analysis Request	Comments	Sample Received
☑	PW-00010		5/5/2006	Water	NA	NA	14 Day	Analytical Suite	See attachment & comments	☐
☑	PW-00011		5/5/2006	Water	NA	NA	14 Day	Analytical Suite	Associated w/ PW-00010	☐

B606362
-001
-002

PLEASE SEND RESULTS: P. KARI, CDM
60 PORT BLVD
LIBBY MT
59923
Karipr@cdm.com
406/293.8595 x27

and

BILLING TO: MICHELLE MORRIS @
ALPHA LAB
8 WALKUP DR.
WESTBOROUGH, MA 01581
email: mmorris@alphalab.com
508/439.5179

Total Number of Samples 2

END OF SUBMITTAL

Additional Comments: LEV 4 RAW DATA REPORTING > REF quote #B1106

Relinquished by (Signature and Company)	Date/Time	Received by (Signature and Company)	Date/Time	Sample Condition upon Receipt
Patrin Kari CDM	5-5-06 1200	Mary E. Conard ELI	5/06/06 0945	Good/Ice

FedEx ice

ENERGY LABORATORIES, INC. • P.O. Box 30916 • 1120 South 27th Street • Billings, MT 59107-0916
800-735-4489 • 406-252-6325 • 406-252-6069 fax • eli@energylab.com

ANALYTICAL SUMMARY REPORT

June 12, 2006

Alpha Analytical Labs
Eight Walkup Dr
Westborough, MA 01581

Workorder No.: B06050736 Quote ID: B1106
Project Name: Not Indicated

Energy Laboratories Inc received the following 2 samples from Alpha Analytical Labs on 5/8/2006 for analysis.

Sample ID	Client Sample ID	Collect Date	Receive Date	Matrix	Test
B06050736-001	PW-00010	05/05/06 8:20	05/08/06	Drinking Water	Metals by ICP/ICPMS, Drinking Water Alkalinity Bacteria, Private Water Supply Anions by ion chromatography Conductivity Mercury, Drinking Water Fluoride 515-Herbicides, Chlorinated SDWA Hardness as CaCO3 Nitrogen, Nitrate + Nitrite pH Metals Digestion by EPA 200.2 Digestion, Mercury by CVAA 505 sample microextraction 505-Pesticides, Organohalide SDWA Separatory Funnel Liquid Liquid Ext. 531-Pesticides, Carbamates SDWA Gross Alpha Radium 226 + Radium 228 Radium 226 as Total Radium 228 as Total Solids, Total Dissolved Sulfide, Methylene Blue Colorimetric Semi-Volatile Organic Compounds Extraction 525-Semi-Volatile Organic Compounds, SDWA 524-Purgeable Organics, SDWA
B06050736-002	Trip Blank PW-00011	05/05/06 8:20	05/08/06	Trip Blank	524-Purgeable Organics, SDWA

There were no problems with the analyses and all data for associated QC met EPA or laboratory specifications except if noted in report comments or the Case Narrative.

If you have any questions regarding these tests results, please call.

Report Approved By: [signature]

ENERGY LABORATORIES, INC. • P.O. Box 30916 • 1120 South 27th Street • Billings, MT 59107-0916
800-735-4489 • 406-252-6325 • 406-252-6069 fax • eli@energylab.com

Date: *12-Jun-06*

CLIENT: Alpha Analytical Labs
Project:
Sample Delivery Group: B06050736

CASE NARRATIVE

Revised Report. Initial report was electronically sent June 2, 2006. This revised final report includes a case narrative, additional QC summary information, and a Level IV instrument data package. Samples were delivered June 06, 2006. The "Date Received" reflects the first open business day that samples were received and processed. Date delivered is identified on the chain-of-custody record. Due to 24 hour holding time, microbiology analyses were initiated on date delivered, but before samples were logged into laboratory information management system.

Included with the analysis reports are instrument data reports for all analysis associated with the instrument calibration, QC sample analysis, and sample analysis. Copies of the detailed laboratory records for the analyses are sorted by method, instrument, then analysis time. For example, in the 525.2 analyses, instrument raw data summaries and chromatograms for the initial calibration, continuing calibration, method blanks, blank matrix spike, matrix spike, and sample results are included with this sample analyses set. Spectra are provided for all target analytes found in samples. Other methods reported contain similar information as appropriate. All analytical data is within method QA/QC specifications except as noted on analyses and/or QC summary reports, or in this narrative. A "QC Coordination" report is prepared which details the QC batch ID and sequence QC associated with each analyses of a sample.

SUBCONTRACTING ANALYSIS
Subcontracting of sample analyses to an outside laboratory was required. ENERGY LABORATORIES, INC. will utilize its branch laboratories or qualified contract laboratories for this service. Any such laboratories are indicated within the Laboratory Analytical Report.

BRANCH LABORATORY LOCATIONS
eli-b - Energy Laboratories, Inc. - Billings, MT, EPA # MT00005
eli-c - Energy Laboratories, Inc. - Casper, WY, EPA# WY00002
eli-f - Energy Laboratories, Inc. - Idaho Falls, ID, EPA # ID00942
eli-g - Energy Laboratories, Inc. - Gillette, WY, EPA# WY00006
eli-h - Energy Laboratories, Inc. - Helena, MT, EPA# MT00945
eli-r - Energy Laboratories, Inc. - Rapid City, SD, EPA# SD00012
eli-t - Energy Laboratories, Inc. - College Station, TX, EPA# TX01520

ENERGY LABORATORIES, INC. - BILLINGS, MT certified method selections contained in this report meet requirements as set forth by NELAP (National Environmental Laboratory Accreditation Program) . NELAP required reporting format is available upon request.

Inclusion of the raw data will be found on the attached CD. Only the raw data associated with parameters listed on this report should be validated.

Cornelius A. Valkenburg Ph.D.
Corporate Quality Assurance Officer
Energy Laboratories Inc.-Billings, MT

ENERGY LABORATORIES, INC. • P.O. Box 30916 • 1120 South 27th Street • Billings, MT 59107-0916
800-735-4489 • 406-252-6325 • 406-252-6069 fax • eli@energylab.com

LABORATORY ANALYTICAL REPORT

Revised Date: 06/12/06
Report Date: 06/02/06
Collection Date: 05/05/06 08:20
Received Date: 05/08/06
Matrix: DRINKING WATER
Sampled By: Not Given

Client: Alpha Analytical Labs
Project:
Lab ID: B06050736-001
Client Sample ID: PW-00010

Analyses	Result	Units	Safe/Unsafe	Qual	Method	Analysis Date / By
MICROBIOLOGICAL						
Coliform, Total	Absent	per 100ml	SAFE		A9223	05/06/06 10:00 / ldv
Coliform, E-Coli	Absent	per 100ml			A9223	05/06/06 10:00 / ldv

Comments: The notation "SAFE" indicates that the water was bacteriologically SAFE when sampled.
The notation "UNSAFE" indicates that the water was bacteriologically UNSAFE when sampled.

Method Reference: E - EPA / MCAWW Methodology A - Standard Methods 19th Ed.

ENERGY LABORATORIES, INC. • P.O. Box 30916 • 1120 South 27th Street • Billings, MT 59107-0916
800-735-4489 • 406-252-6325 • 406-252-6069 fax • eli@energylab.com

LABORATORY ANALYTICAL REPORT

Revised Date: 06/12/06
Report Date: 06/02/06
Collection Date: 05/05/06 08:20
Date Received: 05/08/06
Matrix: Drinking Water

Client: Alpha Analytical Labs
Project:
Lab ID: B06050736-001
Client Sample ID: PW-00010

Analyses	Result	Units	Qual	RL	MCL/ QCL	Method	Analysis Date / By
PHYSICAL PROPERTIES							
pH	8.1	s.u.		0.1		E150.1	05/08/06 19:46 / jak
Conductivity	758	umhos/cm		1		A2510 B	05/08/06 12:17 / jak
Solids, Total Dissolved TDS @ 180 C	443	mg/L		10		A2540 C	05/08/06 11:53 / qed
INORGANICS							
Alkalinity, Total as CaCO3	385	mg/L		1		A2320 B	05/08/06 19:46 / jak
Bicarbonate as HCO3	470	mg/L		1		A2320 B	05/08/06 19:46 / jak
Carbonate as CO3	ND	mg/L		1		A2320 B	05/08/06 19:46 / jak
Chloride	12	mg/L		1		E300.0	05/10/06 13:04 / qed
Sulfate	27	mg/L		1		E300.0	05/10/06 13:04 / qed
Fluoride	2.0	mg/L		0.1		A4500-F C	05/09/06 19:01 / qed
Sulfide	ND	mg/L		0.04		E376.2	05/10/06 09:00 / pwc
Hardness as CaCO3	332	mg/L		1		A2340 B	05/10/06 15:56 / klc
NUTRIENTS							
Nitrogen, Nitrate+Nitrite as N	0.16	mg/L		0.05	10	E353.2	05/10/06 09:50 / bls
METALS, TOTAL							
Antimony	ND	mg/L		0.003	0.006	E200.8	05/12/06 04:50 / jjw
Arsenic	0.003	mg/L		0.001	0.01	E200.8	05/12/06 04:50 / jjw
Barium	0.4	mg/L		0.1	2	E200.7	05/10/06 15:56 / rlh
Beryllium	ND	mg/L		0.001	0.004	E200.7	05/10/06 15:56 / rlh
Cadmium	ND	mg/L		0.001	0.005	E200.7	05/10/06 15:56 / rlh
Calcium	98	mg/L		1		E200.7	05/10/06 15:56 / rlh
Chromium	ND	mg/L		0.01	0.1	E200.7	05/10/06 15:56 / rlh
Copper	ND	mg/L		0.01		E200.7	05/10/06 15:56 / rlh
Iron	0.07	mg/L		0.03		E200.7	05/10/06 15:56 / rlh
Lead	0.001	mg/L		0.001		E200.8	05/12/06 04:50 / jjw
Magnesium	21	mg/L		1		E200.7	05/10/06 15:56 / rlh
Manganese	ND	mg/L		0.01		E200.7	05/10/06 15:56 / rlh
Mercury	ND	mg/L		0.0002	0.002	E245.1	05/11/06 12:02 / klc
Selenium	ND	mg/L		0.005	0.05	E200.8	05/12/06 04:50 / jjw
Sodium	45	mg/L		1		E200.7	05/10/06 15:56 / rlh
Thallium	ND	mg/L		0.001	0.002	E200.8	05/12/06 04:50 / jjw
Zinc	ND	mg/L		0.01		E200.7	05/10/06 15:56 / rlh
RADIONUCLIDES (CONTRACT LAB WY00002)							
Gross Alpha	4.7	pCi/L		3.0	15	E900.0	05/26/06 04:55 / eli-c
Gross Alpha precision (±)	0.7	pCi/L				E900.0	05/26/06 04:55 / eli-c
Radium 226 + Radium 228	ND	pCi/L		1.0	5	Calculation	05/31/06 10:43 / eli-c

Report Definitions:
RL - Analyte reporting limit.
QCL - Quality control limit.
MCL - Maximum contaminant level.
ND - Not detected at the reporting limit.

ENERGY LABORATORIES, INC. • P.O. Box 30916 • 1120 South 27th Street • Billings, MT 59107-0916
800-735-4489 • 406-252-6325 • 406-252-6069 fax • eli@energylab.com

LABORATORY ANALYTICAL REPORT

Revised Date: 06/12/06
Report Date: 06/02/06
Collection Date: 05/05/06 08:20
Date Received: 05/08/06
Matrix: Drinking Water

Client: Alpha Analytical Labs
Project:
Lab ID: B06050736-001
Client Sample ID: PW-00010

Analyses	Result	Units	Qual	RL	MCL/ QCL	Method	Analysis Date / By
RADIONUCLIDES (CONTRACT LAB WY00002)							
Radium 226	0.3	pCi/L		0.2		E903.0	05/30/06 16:08 / eli-c
Radium 226 precision (±)	0	pCi/L				E903.0	05/30/06 16:08 / eli-c
Radium 228	ND	pCi/L		1.0		RA-05	05/23/06 12:32 / eli-c
VOLATILE ORGANIC COMPOUNDS							
Benzene	ND	ug/L		0.50	5	E524.2	05/15/06 19:53 / hjc
Bromobenzene	ND	ug/L		0.50		E524.2	05/15/06 19:53 / hjc
Bromochloromethane	ND	ug/L		0.50		E524.2	05/15/06 19:53 / hjc
Bromodichloromethane	ND	ug/L		0.50		E524.2	05/15/06 19:53 / hjc
Bromoform	ND	ug/L		0.50		E524.2	05/15/06 19:53 / hjc
Bromomethane	ND	ug/L		0.50		E524.2	05/15/06 19:53 / hjc
n-Butylbenzene	ND	ug/L		0.50		E524.2	05/15/06 19:53 / hjc
sec-Butylbenzene	ND	ug/L		0.50		E524.2	05/15/06 19:53 / hjc
tert-Butylbenzene	ND	ug/L		0.50		E524.2	05/15/06 19:53 / hjc
Carbon tetrachloride	ND	ug/L		0.50	5	E524.2	05/15/06 19:53 / hjc
1,2-Dichloroethane	ND	ug/L		0.50	5	E524.2	05/15/06 19:53 / hjc
Chlorobenzene	ND	ug/L		0.50	100	E524.2	05/15/06 19:53 / hjc
Chlorodibromomethane	ND	ug/L		0.50		E524.2	05/15/06 19:53 / hjc
Chloroethane	ND	ug/L		0.50		E524.2	05/15/06 19:53 / hjc
Chloroform	ND	ug/L		0.50		E524.2	05/15/06 19:53 / hjc
Chloromethane	ND	ug/L		0.50		E524.2	05/15/06 19:53 / hjc
2-Chlorotoluene	ND	ug/L		0.50		E524.2	05/15/06 19:53 / hjc
4-Chlorotoluene	ND	ug/L		0.50		E524.2	05/15/06 19:53 / hjc
Dibromomethane	ND	ug/L		0.50		E524.2	05/15/06 19:53 / hjc
1,2-Dichlorobenzene	ND	ug/L		0.50	600	E524.2	05/15/06 19:53 / hjc
1,3-Dichlorobenzene	ND	ug/L		0.50		E524.2	05/15/06 19:53 / hjc
1,4-Dichlorobenzene	ND	ug/L		0.50	75	E524.2	05/15/06 19:53 / hjc
Dichlorodifluoromethane	ND	ug/L		0.50		E524.2	05/15/06 19:53 / hjc
1,1-Dichloroethane	ND	ug/L		0.50	5	E524.2	05/15/06 19:53 / hjc
1,1-Dichloroethene	ND	ug/L		0.50	7	E524.2	05/15/06 19:53 / hjc
cis-1,2-Dichloroethene	ND	ug/L		0.50	70	E524.2	05/15/06 19:53 / hjc
trans-1,2-Dichloroethene	ND	ug/L		0.50	100	E524.2	05/15/06 19:53 / hjc
1,2-Dichloropropane	ND	ug/L		0.50	5	E524.2	05/15/06 19:53 / hjc
1,3-Dichloropropane	ND	ug/L		0.50		E524.2	05/15/06 19:53 / hjc
2,2-Dichloropropane	ND	ug/L		0.50		E524.2	05/15/06 19:53 / hjc
1,1-Dichloropropene	ND	ug/L		0.50		E524.2	05/15/06 19:53 / hjc
cis-1,3-Dichloropropene	ND	ug/L		0.50		E524.2	05/15/06 19:53 / hjc
trans-1,3-Dichloropropene	ND	ug/L		0.50		E524.2	05/15/06 19:53 / hjc
Ethylbenzene	ND	ug/L		0.50	700	E524.2	05/15/06 19:53 / hjc
Hexachlorobutadiene	ND	ug/L		0.50		E524.2	05/15/06 19:53 / hjc
Isopropylbenzene	ND	ug/L		0.50		E524.2	05/15/06 19:53 / hjc

Report Definitions: RL - Analyte reporting limit. QCL - Quality control limit. MCL - Maximum contaminant level. ND - Not detected at the reporting limit.

ENERGY LABORATORIES, INC. • P.O. Box 30916 • 1120 South 27th Street • Billings, MT 59107-0916
800-735-4489 • 406-252-6325 • 406-252-6069 fax • eli@energylab.com

LABORATORY ANALYTICAL REPORT

Revised Date: 06/12/06
Report Date: 06/02/06
Collection Date: 05/05/06 08:20
Date Received: 05/08/06
Matrix: Drinking Water

Client: Alpha Analytical Labs
Project:
Lab ID: B06050736-001
Client Sample ID: PW-00010

Analyses	Result	Units	Qual	RL	MCL/ QCL	Method	Analysis Date / By
VOLATILE ORGANIC COMPOUNDS							
p-Isopropyltoluene	ND	ug/L		0.50		E524.2	05/15/06 19:53 / hjc
Methyl tert-butyl ether (MTBE)	ND	ug/L		0.50		E524.2	05/15/06 19:53 / hjc
Methylene chloride	ND	ug/L		0.50	5	E524.2	05/15/06 19:53 / hjc
Naphthalene	ND	ug/L		0.50		E524.2	05/15/06 19:53 / hjc
n-Propylbenzene	ND	ug/L		0.50		E524.2	05/15/06 19:53 / hjc
Styrene	ND	ug/L		0.50	100	E524.2	05/15/06 19:53 / hjc
1,1,1,2-Tetrachloroethane	ND	ug/L		0.50		E524.2	05/15/06 19:53 / hjc
1,1,2,2-Tetrachloroethane	ND	ug/L		0.50		E524.2	05/15/06 19:53 / hjc
Tetrachloroethene	ND	ug/L		0.50	5	E524.2	05/15/06 19:53 / hjc
Toluene	ND	ug/L		0.50	1000	E524.2	05/15/06 19:53 / hjc
1,2,3-Trichlorobenzene	ND	ug/L		0.50		E524.2	05/15/06 19:53 / hjc
1,2,4-Trichlorobenzene	ND	ug/L		0.50	70	E524.2	05/15/06 19:53 / hjc
1,1,1-Trichloroethane	ND	ug/L		0.50	200	E524.2	05/15/06 19:53 / hjc
1,1,2-Trichloroethane	ND	ug/L		0.50	5	E524.2	05/15/06 19:53 / hjc
Trichloroethene	ND	ug/L		0.50	5	E524.2	05/15/06 19:53 / hjc
Trichlorofluoromethane	ND	ug/L		0.50		E524.2	05/15/06 19:53 / hjc
1,2,3-Trichloropropane	ND	ug/L		0.50		E524.2	05/15/06 19:53 / hjc
Trihalomethanes, Total	ND	ug/L		0.50	80	E524.2	05/15/06 19:53 / hjc
1,2,4-Trimethylbenzene	ND	ug/L		0.50		E524.2	05/15/06 19:53 / hjc
1,3,5-Trimethylbenzene	ND	ug/L		0.50		E524.2	05/15/06 19:53 / hjc
Vinyl chloride	ND	ug/L		0.50	2	E524.2	05/15/06 19:53 / hjc
m+p-Xylenes	ND	ug/L		0.50		E524.2	05/15/06 19:53 / hjc
o-Xylene	ND	ug/L		0.50		E524.2	05/15/06 19:53 / hjc
Xylenes, Total	ND	ug/L		0.50	10000	E524.2	05/15/06 19:53 / hjc
Surr: p-Bromofluorobenzene	81.0	%REC			80-120	E524.2	05/15/06 19:53 / hjc
Surr: 1,2-Dichloroethane-d4	93.0	%REC			74-127	E524.2	05/15/06 19:53 / hjc
Surr: Toluene-d8	106	%REC			80-120	E524.2	05/15/06 19:53 / hjc
SEMI-VOLATILE ORGANIC COMPOUNDS							
Atrazine	ND	ug/L		0.10	3	E525.2	05/16/06 19:53 / jkh
Benzo(a)pyrene	ND	ug/L		0.10	0.2	E525.2	05/16/06 19:53 / jkh
bis(2-ethylhexyl)Adipate	ND	ug/L		0.50	400	E525.2	05/16/06 19:53 / jkh
bis(2-ethylhexyl)Phthalate	ND	ug/L		2.0	6	E525.2	05/16/06 19:53 / jkh
Butachlor	ND	ug/L		0.10		E525.2	05/16/06 19:53 / jkh
Metolachlor	ND	ug/L		0.10		E525.2	05/16/06 19:53 / jkh
Metribuzin	ND	ug/L		0.10		E525.2	05/16/06 19:53 / jkh
Propachlor	ND	ug/L		0.10		E525.2	05/16/06 19:53 / jkh
Simazine	ND	ug/L		0.10	4	E525.2	05/16/06 19:53 / jkh
Surr: 1,3-Dimethyl-2-nitrobenzene	103	%REC			70-130	E525.2	05/16/06 19:53 / jkh
Surr: Perylene-d12	92.0	%REC			70-130	E525.2	05/16/06 19:53 / jkh
Surr: Pyrene-d10	103	%REC			70-130	E525.2	05/16/06 19:53 / jkh

Report Definitions:
RL - Analyte reporting limit.
QCL - Quality control limit.
MCL - Maximum contaminant level.
ND - Not detected at the reporting limit.

ENERGY LABORATORIES, INC. • P.O. Box 30916 • 1120 South 27th Street • Billings, MT 59107-0916
800-735-4489 • 406-252-6325 • 406-252-6069 fax • eli@energylab.com

LABORATORY ANALYTICAL REPORT

Revised Date: 06/12/06
Report Date: 06/02/06
Collection Date: 05/05/06 08:20
Date Received: 05/08/06
Matrix: Drinking Water

Client: Alpha Analytical Labs
Project:
Lab ID: B06050736-001
Client Sample ID: PW-00010

Analyses	Result	Units	Qual	RL	MCL/ QCL	Method	Analysis Date / By
SEMI-VOLATILE ORGANIC COMPOUNDS							
Surr: Triphenylphosphate	109	%REC			70-130	E525.2	05/16/06 19:53 / jkh
PESTICIDES, BY HPLC (CONTRACT LAB WY00002)							
Aldicarb	ND	ug/L		0.50	3	E531.1	05/10/06 12:46 / eli-c
Aldicarb sulfone	ND	ug/L		0.50	2	E531.1	05/10/06 12:46 / eli-c
Aldicarb sulfoxide	ND	ug/L		0.50	4	E531.1	05/10/06 12:46 / eli-c
Carbaryl	ND	ug/L		0.50		E531.1	05/10/06 12:46 / eli-c
Carbofuran	ND	ug/L		0.50	40	E531.1	05/10/06 12:46 / eli-c
3-Hydroxycarbofuran	ND	ug/L		0.50		E531.1	05/10/06 12:46 / eli-c
Methiocarb	ND	ug/L		0.50		E531.1	05/10/06 12:46 / eli-c
Methomyl	ND	ug/L		0.50		E531.1	05/10/06 12:46 / eli-c
Oxamyl	ND	ug/L		0.50	200	E531.1	05/10/06 12:46 / eli-c
Baygon	ND	ug/L		0.50		E531.1	05/10/06 12:46 / eli-c
Surr: BDMC	93.0	%REC			70-130	E531.1	05/10/06 12:46 / eli-c
PESTICIDES							
Alachlor	ND	ug/L		0.10	2	E505	05/12/06 19:51 / eli-c
Aldrin	ND	ug/L		0.010		E505	05/12/06 19:51 / eli-c
Aroclor 1016	ND	ug/L		0.080		E505	05/12/06 19:51 / eli-c
Aroclor 1221	ND	ug/L		2.0		E505	05/12/06 19:51 / eli-c
Aroclor 1232	ND	ug/L		0.50		E505	05/12/06 19:51 / eli-c
Aroclor 1242	ND	ug/L		0.30		E505	05/12/06 19:51 / eli-c
Aroclor 1248	ND	ug/L		0.10		E505	05/12/06 19:51 / eli-c
Aroclor 1254	ND	ug/L		0.10		E505	05/12/06 19:51 / eli-c
Aroclor 1260	ND	ug/L		0.20		E505	05/12/06 19:51 / eli-c
Atrazine	ND	ug/L		1.0	3	E505	05/12/06 19:51 / eli-c
gamma-BHC (Lindane)	ND	ug/L		0.010	0.2	E505	05/12/06 19:51 / eli-c
Chlordane	ND	ug/L		0.20	2	E505	05/12/06 19:51 / eli-c
alpha-Chlordane	ND	ug/L		0.010		E505	05/12/06 19:51 / eli-c
gamma-Chlordane	ND	ug/L		0.010		E505	05/12/06 19:51 / eli-c
Dieldrin	ND	ug/L		0.010		E505	05/12/06 19:51 / eli-c
Endrin	ND	ug/L		0.010	2	E505	05/12/06 19:51 / eli-c
Heptachlor	ND	ug/L		0.010	0.4	E505	05/12/06 19:51 / eli-c
Heptachlor epoxide	ND	ug/L		0.010	0.2	E505	05/12/06 19:51 / eli-c
Hexachlorobenzene	ND	ug/L		0.010	1	E505	05/12/06 19:51 / eli-c
Hexachlorocyclopentadiene	ND	ug/L		0.020	50	E505	05/12/06 19:51 / eli-c
Methoxychlor	ND	ug/L		0.050	40	E505	05/12/06 19:51 / eli-c
cis-Nonachlor	ND	ug/L		0.010		E505	05/12/06 19:51 / eli-c
trans-Nonachlor	ND	ug/L		0.010		E505	05/12/06 19:51 / eli-c
Simazine	ND	ug/L		1.0	4	E505	05/12/06 19:51 / eli-c
Toxaphene	ND	ug/L		1.0	3	E505	05/12/06 19:51 / eli-c

Report Definitions:
RL - Analyte reporting limit.
QCL - Quality control limit.
MCL - Maximum contaminant level.
ND - Not detected at the reporting limit.

ENERGY LABORATORIES, INC. • P.O. Box 30916 • 1120 South 27th Street • Billings, MT 59107-0916
800-735-4489 • 406-252-6325 • 406-252-6069 fax • eli@energylab.com

LABORATORY ANALYTICAL REPORT

Revised Date: 06/12/06
Report Date: 06/02/06
Collection Date: 05/05/06 08:20
Date Received: 05/08/06
Matrix: Drinking Water

Client: Alpha Analytical Labs
Project:
Lab ID: B06050736-001
Client Sample ID: PW-00010

Analyses	Result	Units	Qual	RL	MCL/ QCL	Method	Analysis Date / By
PESTICIDES							
Trifluralin	ND	ug/L		0.010		E505	05/12/06 19:51 / eli-c
Surr: Tetrachloro-m-xylene	113	%REC			40-150	E505	05/12/06 19:51 / eli-c
Surr: Decachlorobiphenyl	100	%REC			40-150	E505	05/12/06 19:51 / eli-c
HERBICIDES							
2,4-D	ND	ug/L		1.0	70	E515.1	05/21/06 01:00 / jml
2,4-DB	ND	ug/L		2.5		E515.1	05/21/06 01:00 / jml
Dalapon	ND	ug/L		2.5	200	E515.1	05/21/06 01:00 / jml
Dicamba	ND	ug/L		0.25		E515.1	05/21/06 01:00 / jml
Dichlorprop	ND	ug/L		1.0		E515.1	05/21/06 01:00 / jml
Dinoseb	ND	ug/L		1.0	7	E515.1	05/21/06 01:00 / jml
Pentachlorophenol	ND	ug/L		0.040	1	E515.1	05/21/06 01:00 / jml
Picloram	ND	ug/L		0.50	500	E515.1	05/21/06 01:00 / jml
2,4,5-TP (Silvex)	ND	ug/L		0.20	50	E515.1	05/21/06 01:00 / jml
Surr: DCAA	71.0	%REC			70-130	E515.1	05/21/06 01:00 / jml

Report Definitions:
RL - Analyte reporting limit.
QCL - Quality control limit.
MCL - Maximum contaminant level.
ND - Not detected at the reporting limit.

ENERGY LABORATORIES, INC. • P.O. Box 30916 • 1120 South 27th Street • Billings, MT 59107-0916
800-735-4489 • 406-252-6325 • 406-252-6069 fax • eli@energylab.com

LABORATORY ANALYTICAL REPORT

Revised Date: 06/12/06
Report Date: 06/02/06
Collection Date: 05/05/06 08:20
Date Received: 05/08/06
Matrix: Trip Blank

Client: Alpha Analytical Labs
Project:
Lab ID: B06050736-002
Client Sample ID: Trip Blank PW-00011

Analyses	Result	Units	Qual	RL	MCL/ QCL	Method	Analysis Date / By
VOLATILE ORGANIC COMPOUNDS							
Benzene	ND	ug/L		0.50	5	E524.2	05/15/06 20:25 / hjc
Bromobenzene	ND	ug/L		0.50		E524.2	05/15/06 20:25 / hjc
Bromochloromethane	ND	ug/L		0.50		E524.2	05/15/06 20:25 / hjc
Bromodichloromethane	ND	ug/L		0.50		E524.2	05/15/06 20:25 / hjc
Bromoform	ND	ug/L		0.50		E524.2	05/15/06 20:25 / hjc
Bromomethane	ND	ug/L		0.50		E524.2	05/15/06 20:25 / hjc
n-Butylbenzene	ND	ug/L		0.50		E524.2	05/15/06 20:25 / hjc
sec-Butylbenzene	ND	ug/L		0.50		E524.2	05/15/06 20:25 / hjc
tert-Butylbenzene	ND	ug/L		0.50		E524.2	05/15/06 20:25 / hjc
Carbon tetrachloride	ND	ug/L		0.50	5	E524.2	05/15/06 20:25 / hjc
1,2-Dichloroethane	ND	ug/L		0.50	5	E524.2	05/15/06 20:25 / hjc
Chlorobenzene	ND	ug/L		0.50	100	E524.2	05/15/06 20:25 / hjc
Chlorodibromomethane	ND	ug/L		0.50		E524.2	05/15/06 20:25 / hjc
Chloroethane	ND	ug/L		0.50		E524.2	05/15/06 20:25 / hjc
Chloroform	ND	ug/L		0.50		E524.2	05/15/06 20:25 / hjc
Chloromethane	ND	ug/L		0.50		E524.2	05/15/06 20:25 / hjc
2-Chlorotoluene	ND	ug/L		0.50		E524.2	05/15/06 20:25 / hjc
4-Chlorotoluene	ND	ug/L		0.50		E524.2	05/15/06 20:25 / hjc
1,2-Dibromo-3-chloropropane	ND	ug/L		1.0	0.2	E524.2	05/15/06 20:25 / hjc
Dibromomethane	ND	ug/L		0.50		E524.2	05/15/06 20:25 / hjc
1,2-Dichlorobenzene	ND	ug/L		0.50	600	E524.2	05/15/06 20:25 / hjc
1,3-Dichlorobenzene	ND	ug/L		0.50		E524.2	05/15/06 20:25 / hjc
1,4-Dichlorobenzene	ND	ug/L		0.50	75	E524.2	05/15/06 20:25 / hjc
Dichlorodifluoromethane	ND	ug/L		0.50		E524.2	05/15/06 20:25 / hjc
1,1-Dichloroethane	ND	ug/L		0.50	5	E524.2	05/15/06 20:25 / hjc
1,2-Dibromoethane	ND	ug/L		0.50	0.05	E524.2	05/15/06 20:25 / hjc
1,1-Dichloroethene	ND	ug/L		0.50	7	E524.2	05/15/06 20:25 / hjc
cis-1,2-Dichloroethene	ND	ug/L		0.50	70	E524.2	05/15/06 20:25 / hjc
trans-1,2-Dichloroethene	ND	ug/L		0.50	100	E524.2	05/15/06 20:25 / hjc
1,2-Dichloropropane	ND	ug/L		0.50	5	E524.2	05/15/06 20:25 / hjc
1,3-Dichloropropane	ND	ug/L		0.50		E524.2	05/15/06 20:25 / hjc
2,2-Dichloropropane	ND	ug/L		0.50		E524.2	05/15/06 20:25 / hjc
1,1-Dichloropropene	ND	ug/L		0.50		E524.2	05/15/06 20:25 / hjc
cis-1,3-Dichloropropene	ND	ug/L		0.50		E524.2	05/15/06 20:25 / hjc
trans-1,3-Dichloropropene	ND	ug/L		0.50		E524.2	05/15/06 20:25 / hjc
Ethylbenzene	ND	ug/L		0.50	700	E524.2	05/15/06 20:25 / hjc
Hexachlorobutadiene	ND	ug/L		0.50		E524.2	05/15/06 20:25 / hjc
Isopropylbenzene	ND	ug/L		0.50		E524.2	05/15/06 20:25 / hjc
p-Isopropyltoluene	ND	ug/L		0.50		E524.2	05/15/06 20:25 / hjc
Methyl tert-butyl ether (MTBE)	ND	ug/L		0.50		E524.2	05/15/06 20:25 / hjc
Methylene chloride	ND	ug/L		0.50	5	E524.2	05/15/06 20:25 / hjc

Report Definitions:
RL - Analyte reporting limit.
QCL - Quality control limit.
MCL - Maximum contaminant level.
ND - Not detected at the reporting limit.

ENERGY LABORATORIES, INC. • P.O. Box 30916 • 1120 South 27th Street • Billings, MT 59107-0916
800-735-4489 • 406-252-6325 • 406-252-6069 fax • eli@energylab.com

LABORATORY ANALYTICAL REPORT

Revised Date: 06/12/06
Report Date: 06/02/06
Collection Date: 05/05/06 08:20
Date Received: 05/08/06
Matrix: Trip Blank

Client: Alpha Analytical Labs
Project:
Lab ID: B06050736-002
Client Sample ID: Trip Blank PW-00011

Analyses	Result	Units	Qual	RL	MCL/ QCL	Method	Analysis Date / By
VOLATILE ORGANIC COMPOUNDS							
Naphthalene	ND	ug/L		0.50		E524.2	05/15/06 20:25 / hjc
n-Propylbenzene	ND	ug/L		0.50		E524.2	05/15/06 20:25 / hjc
Styrene	ND	ug/L		0.50	100	E524.2	05/15/06 20:25 / hjc
1,1,1,2-Tetrachloroethane	ND	ug/L		0.50		E524.2	05/15/06 20:25 / hjc
1,1,2,2-Tetrachloroethane	ND	ug/L		0.50		E524.2	05/15/06 20:25 / hjc
Tetrachloroethene	ND	ug/L		0.50	5	E524.2	05/15/06 20:25 / hjc
Toluene	ND	ug/L		0.50	1000	E524.2	05/15/06 20:25 / hjc
1,2,3-Trichlorobenzene	ND	ug/L		0.50		E524.2	05/15/06 20:25 / hjc
1,2,4-Trichlorobenzene	ND	ug/L		0.50	70	E524.2	05/15/06 20:25 / hjc
1,1,1-Trichloroethane	ND	ug/L		0.50	200	E524.2	05/15/06 20:25 / hjc
1,1,2-Trichloroethane	ND	ug/L		0.50	5	E524.2	05/15/06 20:25 / hjc
Trichloroethene	ND	ug/L		0.50	5	E524.2	05/15/06 20:25 / hjc
Trichlorofluoromethane	ND	ug/L		0.50		E524.2	05/15/06 20:25 / hjc
1,2,3-Trichloropropane	ND	ug/L		0.50		E524.2	05/15/06 20:25 / hjc
Trihalomethanes, Total	ND	ug/L		0.50	80	E524.2	05/15/06 20:25 / hjc
1,2,4-Trimethylbenzene	ND	ug/L		0.50		E524.2	05/15/06 20:25 / hjc
1,3,5-Trimethylbenzene	ND	ug/L		0.50		E524.2	05/15/06 20:25 / hjc
Vinyl chloride	ND	ug/L		0.50	2	E524.2	05/15/06 20:25 / hjc
m+p-Xylenes	ND	ug/L		0.50		E524.2	05/15/06 20:25 / hjc
o-Xylene	ND	ug/L		0.50		E524.2	05/15/06 20:25 / hjc
Xylenes, Total	ND	ug/L		0.50	10000	E524.2	05/15/06 20:25 / hjc
Surr: p-Bromofluorobenzene	86.0	%REC			80-120	E524.2	05/15/06 20:25 / hjc
Surr: 1,2-Dichloroethane-d4	97.0	%REC			74-127	E524.2	05/15/06 20:25 / hjc
Surr: Toluene-d8	96.0	%REC			80-120	E524.2	05/15/06 20:25 / hjc

Report Definitions:
RL - Analyte reporting limit.
QCL - Quality control limit.
MCL - Maximum contaminant level.
ND - Not detected at the reporting limit.

ENERGY LABORATORIES, INC. • P.O. Box 30916 • 1120 South 27th Street • Billings, MT 59107-0916
800-735-4489 • 406-252-6325 • 406-252-6069 fax • eli@energylab.com

QA/QC Summary Report

Client: Alpha Analytical Labs
Project:

Report Date: 06/12/06
Work Order: B06050736

Analyte	Result	Units	RL	%REC	Low Limit	High Limit	RPD	RPDLimit	Qual
Method: A2320 B									Batch: R75338
Sample ID: MB	Method Blank				Run: MAN-TECH_060508A				05/08/06 17:22
Alkalinity, Total as CaCO3	ND	mg/L	1						
Bicarbonate as HCO3	1	mg/L	1						
Carbonate as CO3	ND	mg/L	1						
Sample ID: LCS	Laboratory Control Sample				Run: MAN-TECH_060508A				05/08/06 17:28
Alkalinity, Total as CaCO3	102	mg/L	1.0	102	90	110			
Sample ID: B06050454-003BMS	Sample Matrix Spike				Run: MAN-TECH_060508A				05/08/06 17:43
Alkalinity, Total as CaCO3	530	mg/L	1.0	96	80	120			
Sample ID: B06050454-003BMSD	Sample Matrix Spike Duplicate				Run: MAN-TECH_060508A				05/08/06 17:49
Alkalinity, Total as CaCO3	522	mg/L	1.0	92	80	120	1.4	20	
Sample ID: B06050720-001BMS	Sample Matrix Spike				Run: MAN-TECH_060508A				05/08/06 18:52
Alkalinity, Total as CaCO3	242	mg/L	1.0	92	80	120			
Sample ID: B06050720-001BMSD	Sample Matrix Spike Duplicate				Run: MAN-TECH_060508A				05/08/06 19:06
Alkalinity, Total as CaCO3	243	mg/L	1.0	93	80	120	0.5	20	
Method: A2510 B									Batch: R75338
Sample ID: 150STD	Laboratory Control Sample				Run: MAN-TECH_060508A				05/08/06 11:51
Conductivity	148	umhos/cm	1.0	98	90	110			
Sample ID: 5000STD	Laboratory Control Sample				Run: MAN-TECH_060508A				05/08/06 11:53
Conductivity	4920	umhos/cm	1.0	98	90	110			
Sample ID: B06050454-004BDUP	Sample Duplicate				Run: MAN-TECH_060508A				05/08/06 12:10
Conductivity	1040	umhos/cm	1.0				0.2	10	
Method: A2540 C									Batch: TDS060508A
Sample ID: MBLK1	Method Blank				Run: WC-BAL-99-3A_060508A				05/08/06 11:19
Solids, Total Dissolved TDS @ 180 C	ND	mg/L	10						
Sample ID: LFB1	Sample Matrix Spike				Run: WC-BAL-99-3A_060508A				05/08/06 11:20
Solids, Total Dissolved TDS @ 180 C	1080	mg/L	10	1080	80	120			S
Sample ID: B06050712-001A MS	Sample Matrix Spike				Run: WC-BAL-99-3A_060508A				05/08/06 11:24
Solids, Total Dissolved TDS @ 180 C	4390	mg/L	10	102	80	120			
Sample ID: B06050712-001A MSD	Sample Matrix Spike Duplicate				Run: WC-BAL-99-3A_060508A				05/08/06 11:25
Solids, Total Dissolved TDS @ 180 C	4440	mg/L	10	103	80	120	1.0	20	

Qualifiers:

RL - Analyte reporting limit.

ND - Not detected at the reporting limit.

S - Spike recovery outside of advisory limits.

ENERGY LABORATORIES, INC. • P.O. Box 30916 • 1120 South 27th Street • Billings, MT 59107-0916
800-735-4489 • 406-252-6325 • 406-252-6069 fax • eli@energylab.com

QA/QC Summary Report

Client: Alpha Analytical Labs
Project:

Report Date: 06/12/06
Work Order: B06050736

Analyte	Result	Units	RL	%REC	Low Limit	High Limit	RPD	RPDLimit	Qual
Method: A4500-F C								Analytical Run: MAN-TECH_060509A	
Sample ID: ICV	Initial Calibration Verification Standard								05/09/06 18:20
Fluoride	0.990	mg/L	0.10	99	90	110			
Sample ID: CCV	Continuing Calibration Verification Standard								05/09/06 20:26
Fluoride	1.01	mg/L	0.10	101	90	110			
Sample ID: CCB	Continuing Calibration Blank								05/09/06 20:33
Fluoride	0.0200	mg/L	0.10						
Sample ID: CCV	Continuing Calibration Verification Standard								05/09/06 21:46
Fluoride	1.02	mg/L	0.10	102	90	110			
Sample ID: CCB	Continuing Calibration Blank								05/09/06 21:53
Fluoride	0.0200	mg/L	0.10						
Method: A4500-F C									Batch: R75404
Sample ID: MB	Method Blank				Run: MAN-TECH_060509A				05/09/06 18:27
Fluoride	ND	mg/L	0.05						
Sample ID: LFB	Laboratory Fortified Blank				Run: MAN-TECH_060509A				05/09/06 18:29
Fluoride	0.980	mg/L	0.10	98	90	110			
Sample ID: B06050720-001BMS	Sample Matrix Spike				Run: MAN-TECH_060509A				05/09/06 18:47
Fluoride	1.06	mg/L	0.10	94	80	120			
Sample ID: B06050720-001BMSD	Sample Matrix Spike Duplicate				Run: MAN-TECH_060509A				05/09/06 18:54
Fluoride	1.06	mg/L	0.10	94	80	120	0.0	10	
Sample ID: B06050930-009AMS	Sample Matrix Spike				Run: MAN-TECH_060509A				05/09/06 21:29
Fluoride	1.11	mg/L	0.10	92	80	120			
Sample ID: B06050930-009AMSD	Sample Matrix Spike Duplicate				Run: MAN-TECH_060509A				05/09/06 21:43
Fluoride	1.11	mg/L	0.10	92	80	120	0.0	10	
Method: E150.1								Analytical Run: MAN-TECH_060508A	
Sample ID: 2ND7BUFFER	Initial Calibration Verification Standard								05/08/06 11:59
pH	6.94	s.u.	0.10	99	90	110			
Method: E150.1									Batch: R75338
Sample ID: 4BUFFER	Laboratory Control Sample				Run: MAN-TECH_060508A				05/08/06 12:07
pH	3.98	s.u.	0.10	100	90	110			

Qualifiers:

RL - Analyte reporting limit.

ND - Not detected at the reporting limit.

ENERGY LABORATORIES, INC. • P.O. Box 30916 • 1120 South 27th Street • Billings, MT 59107-0916
800-735-4489 • 406-252-6325 • 406-252-6069 fax • eli@energylab.com

QA/QC Summary Report

Client: Alpha Analytical Labs
Project:

Report Date: 06/12/06
Work Order: B06050736

Analyte	Result	Units	RL	%REC	Low Limit	High Limit	RPD	RPDLimit	Qual
Method: E200.7									Batch: 21027
Sample ID: LCS1-21027	Laboratory Control Sample				Run: ICP202-B_060510A				05/10/06 15:45
Barium	0.0978	mg/L	0.10	98	85	115			
Beryllium	0.0480	mg/L	0.0010	96	85	115			
Cadmium	0.0491	mg/L	0.0010	98	85	115			
Calcium	5.05	mg/L	1.0	101	85	115			
Chromium	0.0970	mg/L	0.010	97	85	115			
Copper	0.0973	mg/L	0.010	97	85	115			
Iron	0.494	mg/L	0.030	99	85	115			
Magnesium	5.01	mg/L	1.0	100	85	115			
Manganese	0.495	mg/L	0.010	99	85	115			
Sodium	4.54	mg/L	1.0	87	85	115			
Zinc	0.102	mg/L	0.010	102	85	115			
Sample ID: LCS3-21027	Laboratory Control Sample				Run: ICP202-B_060510A				05/10/06 15:48
Barium	0.996	mg/L	0.10	100	85	115			
Beryllium	0.482	mg/L	0.0010	96	85	115			
Cadmium	0.489	mg/L	0.0010	98	85	115			
Calcium	50.3	mg/L	1.0	101	85	115			
Chromium	0.978	mg/L	0.010	98	85	115			
Copper	0.996	mg/L	0.010	100	85	115			
Iron	5.05	mg/L	0.030	101	85	115			
Magnesium	51.1	mg/L	1.0	102	85	115			
Manganese	4.97	mg/L	0.010	99	85	115			
Sodium	48.8	mg/L	1.0	97	85	115			
Zinc	1.01	mg/L	0.010	101	85	115			
Sample ID: B06050742-001C MS1	Sample Matrix Spike				Run: ICP202-B_060510A				05/10/06 16:06
Barium	0.126	mg/L	0.10	102	70	130			
Beryllium	0.0495	mg/L	0.0010	99	70	130			
Cadmium	0.0502	mg/L	0.0010	100	70	130			
Calcium	11.7	mg/L	1.0	107	70	130			
Chromium	0.101	mg/L	0.010	101	70	130			
Copper	0.103	mg/L	0.010	89	70	130			
Iron	1.11	mg/L	0.030	111	70	130			
Magnesium	5.59	mg/L	1.0	103	70	130			
Manganese	0.537	mg/L	0.010	102	70	130			
Sodium	151	mg/L	1.0		70	130			A
Zinc	0.113	mg/L	0.010	83	70	130			
Sample ID: B06050742-001C MSD1	Sample Matrix Spike Duplicate				Run: ICP202-B_060510A				05/10/06 16:17
Barium	0.121	mg/L	0.10	96	70	130	4.3	20	
Beryllium	0.0485	mg/L	0.0010	97	70	130	1.9	20	

Qualifiers:

RL - Analyte reporting limit.

ND - Not detected at the reporting limit.

A - The analyte level was greater than four times the spike level. In accordance with the method % recovery is not calculated.

ENERGY LABORATORIES, INC. • P.O. Box 30916 • 1120 South 27th Street • Billings, MT 59107-0916
800-735-4489 • 406-252-6325 • 406-252-6069 fax • eli@energylab.com

QA/QC Summary Report

Client: Alpha Analytical Labs
Project:

Report Date: 06/12/06
Work Order: B06050736

Analyte	Result	Units	RL	%REC	Low Limit	High Limit	RPD	RPDLimit	Qual
Method: E200.7									Batch: 21027
Sample ID: B06050742-001C MSD1	Sample Matrix Spike Duplicate				Run: ICP202-B_060510A			05/10/06 16:17	
Cadmium	0.0499	mg/L	0.0010	100	70	130	0.6	20	
Calcium	11.6	mg/L	1.0	104	70	130	1.1	20	
Chromium	0.0981	mg/L	0.010	98	70	130	2.8	20	
Copper	0.0990	mg/L	0.010	85	70	130	4.1	20	
Iron	1.08	mg/L	0.030	105	70	130	2.5	20	
Magnesium	5.58	mg/L	1.0	103	70	130	0.2	20	
Manganese	0.526	mg/L	0.010	100	70	130	2.1	20	
Sodium	148	mg/L	1.0		70	130	2.3	20	A
Zinc	0.111	mg/L	0.010	81	70	130	1.9	20	
Sample ID: B06050765-001BDIL	Serial Dilution				Run: ICP202-B_060510A			05/10/06 16:35	
Barium	0.0407	mg/L	0.10		0	0	0.0	10	
Beryllium	ND	mg/L	0.0010		0	0	0.0	10	
Cadmium	ND	mg/L	0.0035		0	0	0.0	10	
Calcium	2.92	mg/L	1.0		0	0	71	10	R
Chromium	ND	mg/L	0.010		0	0	0.0	10	
Copper	0.0222	mg/L	0.010		0	0		10	N
Iron	ND	mg/L	0.15		0	0	0.0	10	
Magnesium	0.800	mg/L	1.0		0	0		10	N
Manganese	0.00840	mg/L	0.010		0	0		10	N
Zinc	0.0159	mg/L	0.010		0	0		10	N
Sample ID: B06050771-002A MS3	Sample Matrix Spike				Run: ICP202-B_060510A			05/10/06 16:46	
Barium	1.14	mg/L	0.10	97	70	130			
Beryllium	0.457	mg/L	0.0010	91	70	130			
Cadmium	0.478	mg/L	0.0010	96	70	130			
Calcium	609	mg/L	1.0		70	130			A
Chromium	0.968	mg/L	0.010	96	70	130			
Copper	1.36	mg/L	0.010	99	70	130			
Iron	107	mg/L	0.030		70	130			A
Magnesium	242	mg/L	1.0	101	70	130			
Manganese	18.8	mg/L	0.010	85	70	130			
Zinc	1.90	mg/L	0.010	97	70	130			
Sample ID: B06050771-002A MSD3	Sample Matrix Spike Duplicate				Run: ICP202-B_060510A			05/10/06 16:49	
Barium	1.14	mg/L	0.10	97	70	130	0.6	20	
Beryllium	0.461	mg/L	0.0010	92	70	130	0.8	20	
Cadmium	0.482	mg/L	0.0010	96	70	130	0.8	20	
Calcium	616	mg/L	1.0		70	130	1.1	20	A
Chromium	0.972	mg/L	0.010	96	70	130	0.4	20	
Copper	1.37	mg/L	0.010	100	70	130	0.4	20	

Qualifiers:

RL - Analyte reporting limit.

ND - Not detected at the reporting limit.

A - The analyte level was greater than four times the spike level. In accordance with the method % recovery is not calculated.

N - The analyte concentration was not sufficiently high to calculate a RPD for the serial dilution test.

ENERGY LABORATORIES, INC. • *P.O. Box 30916 • 1120 South 27th Street • Billings, MT 59107-0916*
800-735-4489 • 406-252-6325 • 406-252-6069 fax • eli@energylab.com

QA/QC Summary Report

Client: Alpha Analytical Labs
Project:

Report Date: 06/12/06
Work Order: B06050736

Analyte	Result	Units	RL	%REC	Low Limit	High Limit	RPD	RPDLimit	Qual
Method: E200.7									Batch: 21027
Sample ID: B06050771-002A MSD3	Sample Matrix Spike Duplicate				Run: ICP202-B_060510A			05/10/06 16:49	
Iron	108	mg/L	0.030		70	130	1.3	20	A
Magnesium	247	mg/L	1.0	111	70	130	2.0	20	
Manganese	19.0	mg/L	0.010	89	70	130	1.1	20	
Zinc	1.91	mg/L	0.010	98	70	130	0.5	20	

Qualifiers:

RL - Analyte reporting limit.

ND - Not detected at the reporting limit.

A - The analyte level was greater than four times the spike level. In accordance with the method % recovery is not calculated.

ENERGY LABORATORIES, INC. • P.O. Box 30916 • 1120 South 27th Street • Billings, MT 59107-0916
800-735-4489 • 406-252-6325 • 406-252-6069 fax • eli@energylab.com

QA/QC Summary Report

Client: Alpha Analytical Labs
Project:

Report Date: 06/12/06
Work Order: B06050736

Analyte	Result	Units	RL	%REC	Low Limit	High Limit	RPD	RPDLimit	Qual
Method: E200.7								Analytical Run: ICP202-B_060510A	
Sample ID: QCS	Initial Calibration Verification Standard								05/10/06 12:24
Barium	0.978	mg/L	0.10	98	95	105			
Beryllium	0.476	mg/L	0.010	95	95	105			
Cadmium	0.481	mg/L	0.010	96	95	105			
Calcium	49.1	mg/L	1.0	98	95	105			
Chromium	0.972	mg/L	0.050	97	95	105			
Copper	1.00	mg/L	0.010	100	95	105			
Iron	4.98	mg/L	0.030	100	95	105			
Magnesium	49.0	mg/L	1.0	98	95	105			
Manganese	4.88	mg/L	0.010	98	95	105			
Sodium	49.5	mg/L	1.0	99	95	105			
Zinc	0.995	mg/L	0.010	100	95	105			
Sample ID: ICV	Continuing Calibration Verification Standard								05/10/06 12:28
Barium	4.83	mg/L	0.10	97	95	105			
Cadmium	4.81	mg/L	0.010	96	95	105			
Calcium	48.5	mg/L	1.0	97	95	105			
Chromium	4.87	mg/L	0.050	97	95	105			
Copper	5.03	mg/L	0.010	101	95	105			
Iron	4.96	mg/L	0.030	99	95	105			
Magnesium	49.1	mg/L	1.0	98	95	105			
Manganese	4.89	mg/L	0.010	98	95	105			
Sodium	51.8	mg/L	1.0	104	95	105			
Zinc	5.04	mg/L	0.010	101	95	105			
Sample ID: CCB	Continuing Calibration Blank								05/10/06 12:31
Barium	0.000330	mg/L	0.10		-0.005	0.005			
Beryllium	0.000180	mg/L	0.010		-0.001	0.001			
Cadmium	5.00E-05	mg/L	0.010		-0.001	0.001			
Calcium	-0.0388	mg/L	1.0		-0.1	0.1			
Chromium	0.000710	mg/L	0.050		-0.005	0.005			
Copper	0.000840	mg/L	0.010		-0.005	0.005			
Iron	0.00226	mg/L	0.030		-0.005	0.005			
Magnesium	0.00636	mg/L	1.0		-0.1	0.1			
Manganese	0.000110	mg/L	0.010		-0.001	0.001			
Sodium	-0.00311	mg/L	1.0		-0.1	0.1			
Zinc	0.000120	mg/L	0.010		-0.005	0.005			
Sample ID: CRI	CRDL Standard for ICP								05/10/06 12:35
Barium	0.00331	mg/L	0.10	110	50	150			
Beryllium	0.00308	mg/L	0.010	103	50	150			
Cadmium	0.00315	mg/L	0.010	105	50	150			

Qualifiers:

RL - Analyte reporting limit.

ND - Not detected at the reporting limit.

ENERGY LABORATORIES, INC. • P.O. Box 30916 • 1120 South 27th Street • Billings, MT 59107-0916
800-735-4489 • 406-252-6325 • 406-252-6069 fax • eli@energylab.com

QA/QC Summary Report

Client: Alpha Analytical Labs
Project:

Report Date: 06/12/06
Work Order: B06050736

Analyte	Result	Units	RL	%REC	Low Limit	High Limit	RPD	RPDLimit	Qual
Method: E200.7								Analytical Run: ICP202-B_060510A	
Sample ID: CRI	CRDL Standard for ICP								05/10/06 12:35
Calcium	0.473	mg/L	1.0	95	50	150			
Chromium	0.0193	mg/L	0.050	96	50	150			
Copper	0.0224	mg/L	0.010	112	50	150			
Iron	0.0199	mg/L	0.030	100	50	150			
Magnesium	0.500	mg/L	1.0	100	50	150			
Manganese	0.00530	mg/L	0.010	106	50	150			
Sodium	0.577	mg/L	1.0	115	50	150			
Zinc	0.0102	mg/L	0.010	102	50	150			
Sample ID: ICSA	Interference Check Sample A								05/10/06 12:39
Barium	0.000500	mg/L	0.10		-0.005	0.0005			
Beryllium	0.000190	mg/L	0.010		-0.001	0.001			
Cadmium	-0.00858	mg/L	0.010		-0.001	0.001			
Calcium	456	mg/L	1.0	91	80	120			
Chromium	-0.00129	mg/L	0.050		-0.01	0.01			
Copper	0.00571	mg/L	0.010		-0.01	0.01			
Iron	199	mg/L	0.091	100	80	120			
Magnesium	507	mg/L	1.0	101	80	120			
Manganese	0.00712	mg/L	0.010		-0.01	0.01			
Sodium	0.0959	mg/L	1.0		-1	1			
Zinc	0.00426	mg/L	0.010		-0.01	0.01			
Sample ID: ICSAB	Interference Check Sample AB								05/10/06 12:42
Barium	0.531	mg/L	0.10	106	80	120			
Beryllium	0.488	mg/L	0.010	98	80	120			
Cadmium	0.914	mg/L	0.010	91	80	120			
Calcium	488	mg/L	1.0	98	80	120			
Chromium	0.474	mg/L	0.050	95	80	120			
Copper	0.561	mg/L	0.010	112	80	120			
Iron	199	mg/L	0.091	100	80	120			
Magnesium	514	mg/L	1.0	103	80	120			
Manganese	0.500	mg/L	0.010	100	80	120			
Sodium	12.4	mg/L	1.0	124	80	120			S
Zinc	1.03	mg/L	0.010	103	80	120			
Sample ID: CCV	Continuing Calibration Verification Standard								05/10/06 15:27
Barium	4.73	mg/L	0.10	95	90	110			
Beryllium	2.31	mg/L	0.010	92	90	110			
Cadmium	4.84	mg/L	0.010	97	90	110			
Calcium	49.0	mg/L	1.0	98	90	110			
Chromium	4.84	mg/L	0.050	97	90	110			

Qualifiers:

RL - Analyte reporting limit.

ND - Not detected at the reporting limit.

S - Spike recovery outside of advisory limits.

ENERGY LABORATORIES, INC. • P.O. Box 30916 • 1120 South 27th Street • Billings, MT 59107-0916
800-735-4489 • 406-252-6325 • 406-252-6069 fax • eli@energylab.com

QA/QC Summary Report

Client: Alpha Analytical Labs
Project:

Report Date: 06/12/06
Work Order: B06050736

Analyte	Result	Units	RL	%REC	Low Limit	High Limit	RPD	RPDLimit	Qual
Method: E200.7								Analytical Run: ICP202-B_060510A	
Sample ID: CCV	Continuing Calibration Verification Standard								05/10/06 15:27
Copper	4.89	mg/L	0.010	98	90	110			
Iron	4.94	mg/L	0.030	99	90	110			
Magnesium	49.6	mg/L	1.0	99	90	110			
Manganese	4.86	mg/L	0.010	97	90	110			
Sodium	50.1	mg/L	1.0	100	90	110			
Zinc	4.99	mg/L	0.010	100	90	110			
Sample ID: CCB	Continuing Calibration Blank								05/10/06 15:31
Barium	0.00179	mg/L	0.10		-0.005	0.005			
Beryllium	0.00101	mg/L	0.010		-0.001	0.001			
Cadmium	0.000920	mg/L	0.010		-0.001	0.001			
Calcium	-0.0152	mg/L	1.0		-0.1	0.1			
Chromium	2.00E-05	mg/L	0.050		-0.005	0.005			
Copper	0.000790	mg/L	0.010		-0.005	0.005			
Iron	0.00378	mg/L	0.030		-0.005	0.005			
Magnesium	0.0225	mg/L	1.0		-0.1	0.1			
Manganese	0.00185	mg/L	0.010		-0.001	0.001			
Sodium	0.248	mg/L	1.0		-0.1	0.1			
Zinc	0.00168	mg/L	0.010		-0.005	0.005			
Sample ID: CCV	Continuing Calibration Verification Standard								05/10/06 16:10
Barium	4.87	mg/L	0.10	97	90	110			
Beryllium	2.37	mg/L	0.010	95	90	110			
Cadmium	4.97	mg/L	0.010	99	90	110			
Calcium	50.3	mg/L	1.0	101	90	110			
Chromium	4.91	mg/L	0.050	98	90	110			
Copper	5.02	mg/L	0.010	100	90	110			
Iron	5.05	mg/L	0.030	101	90	110			
Magnesium	51.4	mg/L	1.0	103	90	110			
Manganese	4.95	mg/L	0.010	99	90	110			
Sodium	49.7	mg/L	1.0	99	90	110			
Zinc	5.14	mg/L	0.010	103	90	110			
Sample ID: CCB	Continuing Calibration Blank								05/10/06 16:13
Barium	0.00201	mg/L	0.10		-0.005	0.005			
Beryllium	0.00108	mg/L	0.010		-0.001	0.001			
Cadmium	0.00155	mg/L	0.010		-0.001	0.001			
Calcium	-0.0129	mg/L	1.0		-0.1	0.1			
Chromium	0.000740	mg/L	0.050		-0.005	0.005			
Copper	0.00494	mg/L	0.010		-0.005	0.005			
Iron	0.00313	mg/L	0.030		-0.005	0.005			

Qualifiers:

RL - Analyte reporting limit.

ND - Not detected at the reporting limit.

ENERGY LABORATORIES, INC. • P.O. Box 30916 • 1120 South 27th Street • Billings, MT 59107-0916
800-735-4489 • 406-252-6325 • 406-252-6069 fax • eli@energylab.com

QA/QC Summary Report

Client: Alpha Analytical Labs
Project:

Report Date: 06/12/06
Work Order: B06050736

Analyte	Result	Units	RL	%REC	Low Limit	High Limit	RPD	RPDLimit	Qual
Method: E200.7								Analytical Run: ICP202-B_060510A	
Sample ID: CCB	Continuing Calibration Blank								05/10/06 16:13
Magnesium	0.0260	mg/L	1.0		-0.1	0.1			
Manganese	0.00191	mg/L	0.010		-0.001	0.001			
Sodium	0.267	mg/L	1.0		-0.1	0.1			
Zinc	0.00225	mg/L	0.010		-0.005	0.005			
Sample ID: CCV	Continuing Calibration Verification Standard								05/10/06 16:53
Barium	4.79	mg/L	0.10	96	90	110			
Beryllium	2.43	mg/L	0.010	97	90	110			
Cadmium	5.18	mg/L	0.010	104	90	110			
Calcium	52.4	mg/L	1.0	105	90	110			
Chromium	5.01	mg/L	0.050	100	90	110			
Copper	4.84	mg/L	0.010	97	90	110			
Iron	5.10	mg/L	0.030	102	90	110			
Magnesium	53.4	mg/L	1.0	107	90	110			
Manganese	4.99	mg/L	0.010	100	90	110			
Sodium	44.3	mg/L	1.0	89	90	110			S
Zinc	5.11	mg/L	0.010	102	90	110			
Sample ID: CCB	Continuing Calibration Blank								05/10/06 16:56
Barium	0.00221	mg/L	0.10		-0.005	0.005			
Beryllium	0.00113	mg/L	0.010		-0.001	0.001			
Cadmium	0.000970	mg/L	0.010		-0.001	0.001			
Calcium	-0.00897	mg/L	1.0		-0.1	0.1			
Chromium	0.000940	mg/L	0.050		-0.005	0.005			
Copper	0.00111	mg/L	0.010		-0.005	0.005			
Iron	0.00795	mg/L	0.030		-0.005	0.005			
Magnesium	0.0226	mg/L	1.0		0.1	0.1			
Manganese	0.00224	mg/L	0.010		-0.001	0.001			
Sodium	0.257	mg/L	1.0		-0.1	0.1			
Zinc	0.00255	mg/L	0.010		-0.005	0.005			

Qualifiers:

RL - Analyte reporting limit.

ND - Not detected at the reporting limit.

S - Spike recovery outside of advisory limits.

ENERGY LABORATORIES, INC. • P.O. Box 30916 • 1120 South 27th Street • Billings, MT 59107-0916
800-735-4489 • 406-252-6325 • 406-252-6069 fax • eli@energylab.com

QA/QC Summary Report

Client: Alpha Analytical Labs
Project:

Report Date: 06/12/06
Work Order: B06050736

Analyte	Result	Units	RL	%REC	Low Limit	High Limit	RPD	RPDLimit	Qual
Method: E200.8									Batch: 21027
Sample ID: MB-21027	Method Blank				Run: ICPMS202-B_060511A				05/11/06 12:58
Antimony	7E-05	mg/L	1E-05						
Arsenic	ND	mg/L	4E-05						
Lead	4E-05	mg/L	8E-06						
Selenium	ND	mg/L	0.0001						
Thallium	1E-05	mg/L	7E-06						
Sample ID: LCS1-21027	Laboratory Control Sample				Run: ICPMS202-B_060511A				05/11/06 13:06
Antimony	0.101	mg/L	0.0050	101	85	115			
Arsenic	0.0991	mg/L	0.0050	99	85	115			
Lead	0.101	mg/L	0.010	101	85	115			
Selenium	0.101	mg/L	0.0050	101	85	115			
Thallium	0.100	mg/L	0.0050	100	85	115			
Sample ID: B06050742-001C MS1	Sample Matrix Spike				Run: ICPMS202-B_060511A				05/11/06 14:09
Antimony	0.103	mg/L	0.0050	103	70	130			
Arsenic	0.117	mg/L	0.0050	100	70	130			
Lead	0.104	mg/L	0.010	103	70	130			
Selenium	0.101	mg/L	0.0050	95	70	130			
Thallium	0.102	mg/L	0.0050	102	70	130			
Sample ID: B06050742-001C MSD1	Sample Matrix Spike Duplicate				Run: ICPMS202-B_060511A				05/11/06 14:17
Antimony	0.102	mg/L	0.0050	102	70	130	1.4	20	
Arsenic	0.114	mg/L	0.0050	98	70	130	1.9	20	
Lead	0.102	mg/L	0.010	102	70	130	1.4	20	
Selenium	0.100	mg/L	0.0050	94	70	130	1.4	20	
Thallium	0.100	mg/L	0.0050	100	70	130	2.2	20	

Qualifiers:

RL - Analyte reporting limit.

ND - Not detected at the reporting limit.

ENERGY LABORATORIES, INC. • P.O. Box 30916 • 1120 South 27th Street • Billings, MT 59107-0916
800-735-4489 • 406-252-6325 • 406-252-6069 fax • eli@energylab.com

QA/QC Summary Report

Client: Alpha Analytical Labs
Project:

Report Date: 06/12/06
Work Order: B06050736

Analyte	Result	Units	RL	%REC	Low Limit	High Limit	RPD	RPDLimit	Qual
Method: E200.8								Analytical Run: ICPMS202-B_060511A	
Sample ID: QCS - ME060230I,ME060	Initial Calibration Verification Standard								05/11/06 11:31
Antimony	0.0504	mg/L	0.050	101	90	110			
Arsenic	0.0503	mg/L	0.0050	101	90	110			
Lead	0.0502	mg/L	0.010	100	90	110			
Selenium	0.0497	mg/L	0.0050	99	90	110			
Thallium	0.0501	mg/L	0.10	100	90	110			
Sample ID: CCB	Continuing Calibration Blank								05/11/06 11:47
Antimony	1.00E-05	mg/L	0.050						
Arsenic	2.90E-05	mg/L	0.0050						
Lead	8.00E-05	mg/L	0.010						
Selenium	3.70E-05	mg/L	0.0050						
Thallium	1.00E-05	mg/L	0.10						
Sample ID: CRI - ME060130E,ME05	CRDL Standard for ICP								05/11/06 11:55
Antimony	0.00109	mg/L	0.050	109	50	150			
Arsenic	0.00105	mg/L	0.0050	105	50	150			
Lead	0.00110	mg/L	0.010	110	50	150			
Selenium	0.000974	mg/L	0.0050	97	50	150			
Thallium	0.00111	mg/L	0.10	111	50	150			
Sample ID: CCV -ME060130E,ME050	Continuing Calibration Verification Standard								05/11/06 12:03
Antimony	0.0489	mg/L	0.050	98	89.5	110.5			
Arsenic	0.0490	mg/L	0.0050	98	89.5	110.5			
Lead	0.0495	mg/L	0.010	99	89.5	110.5			
Selenium	0.0487	mg/L	0.0050	97	89.5	110.5			
Thallium	0.0492	mg/L	0.10	98	89.5	110.5			
Sample ID: ICSA	Interference Check Sample A								05/11/06 12:11
Antimony	0.000499	mg/L	0.050		80	12			
Arsenic	3.40E-05	mg/L	0.0050		80	12			
Lead	0.000682	mg/L	0.010		80	12			
Selenium	-0.000673	mg/L	0.0050		80	12			
Thallium	3.90E-05	mg/L	0.10		80	12			
Sample ID: ICSAB	Interference Check Sample AB								05/11/06 12:19
Antimony	0.000452	mg/L	0.050		80	12			
Arsenic	0.0113	mg/L	0.0050		80	12			
Lead	0.000540	mg/L	0.010		80	12			
Selenium	0.00936	mg/L	0.0050		80	12			
Thallium	1.40E-05	mg/L	0.10		80	12			

Qualifiers:

RL - Analyte reporting limit.

ND - Not detected at the reporting limit.

ENERGY LABORATORIES, INC. • P.O. Box 30916 • 1120 South 27th Street • Billings, MT 59107-0916
800-735-4489 • 406-252-6325 • 406-252-6069 fax • eli@energylab.com

QA/QC Summary Report

Client: Alpha Analytical Labs
Project:

Report Date: 06/12/06
Work Order: B06050736

Analyte	Result	Units	RL	%REC	Low Limit	High Limit	RPD	RPDLimit	Qual
Method: E200.8								Analytical Run: ICPMS202-B_060511A	
Sample ID: CCB	Continuing Calibration Blank								05/11/06 13:37
Antimony	3.00E-06	mg/L	0.050						
Arsenic	1.20E-05	mg/L	0.0050						
Lead	6.50E-05	mg/L	0.010						
Selenium	4.80E-05	mg/L	0.0050						
Thallium	7.00E-06	mg/L	0.10						
Sample ID: CCV -ME060130E,ME050	Continuing Calibration Verification Standard								05/11/06 13:45
Antimony	0.0500	mg/L	0.050	100	89.5	110.5			
Arsenic	0.0484	mg/L	0.0050	97	89.5	110.5			
Lead	0.0498	mg/L	0.010	100	89.5	110.5			
Selenium	0.0497	mg/L	0.0050	99	89.5	110.5			
Thallium	0.0496	mg/L	0.10	99	89.5	110.5			
Sample ID: CCB	Continuing Calibration Blank								05/11/06 15:27
Antimony	9.00E-06	mg/L	0.050						
Arsenic	1.70E-05	mg/L	0.0050						
Lead	8.20E-05	mg/L	0.010						
Selenium	0.000126	mg/L	0.0050						
Thallium	2.00E-06	mg/L	0.10						
Sample ID: CCV -ME060130E,ME050	Continuing Calibration Verification Standard								05/11/06 15:35
Antimony	0.0499	mg/L	0.050	100	89.5	110.5			
Arsenic	0.0495	mg/L	0.0050	99	89.5	110.5			
Lead	0.0499	mg/L	0.010	100	89.5	110.5			
Selenium	0.0518	mg/L	0.0050	104	89.5	110.5			
Thallium	0.0500	mg/L	0.10	100	89.5	110.5			
Sample ID: CCB	Continuing Calibration Blank								05/11/06 22:23
Antimony	4.00E-06	mg/L	0.050						
Arsenic	6.20E-05	mg/L	0.0050						
Lead	1.10E-05	mg/L	0.010						
Selenium	-0.000119	mg/L	0.0050						
Thallium	4.00E-06	mg/L	0.10						
Sample ID: CCV -ME060130E,ME050	Continuing Calibration Verification Standard								05/11/06 22:31
Antimony	0.0485	mg/L	0.050	97	89.5	110.5			
Arsenic	0.0489	mg/L	0.0050	98	89.5	110.5			
Lead	0.0493	mg/L	0.010	99	89.5	110.5			
Selenium	0.0497	mg/L	0.0050	99	89.5	110.5			
Thallium	0.0493	mg/L	0.10	99	89.5	110.5			

Qualifiers:

RL - Analyte reporting limit.

ND - Not detected at the reporting limit.

ENERGY LABORATORIES, INC. • P.O. Box 30916 • 1120 South 27th Street • Billings, MT 59107-0916
800-735-4489 • 406-252-6325 • 406-252-6069 fax • eli@energylab.com

QA/QC Summary Report

Client: Alpha Analytical Labs
Project:

Report Date: 06/12/06
Work Order: B06050736

Analyte	Result	Units	RL	%REC	Low Limit	High Limit	RPD	RPDLimit	Qual
Method: E200.8								Analytical Run: ICPMS202-B_060511A	
Sample ID: CCV -ME060130E,ME050	Continuing Calibration Verification Standard								05/11/06 23:27
Antimony	0.0489	mg/L	0.050	98	89.5	110.5			
Arsenic	0.0488	mg/L	0.0050	98	89.5	110.5			
Lead	0.0496	mg/L	0.010	99	89.5	110.5			
Selenium	0.0489	mg/L	0.0050	98	89.5	110.5			
Thallium	0.0493	mg/L	0.10	99	89.5	110.5			
Sample ID: CCB	Continuing Calibration Blank								05/11/06 23:43
Antimony	2.70E-05	mg/L	0.050						
Arsenic	3.80E-05	mg/L	0.0050						
Lead	2.70E-05	mg/L	0.010						
Selenium	6.80E-05	mg/L	0.0050						
Thallium	3.10E-05	mg/L	0.10						
Sample ID: CCB	Continuing Calibration Blank								05/12/06 03:15
Antimony	1.00E-06	mg/L	0.050						
Arsenic	0.000226	mg/L	0.0050						
Lead	4.00E-06	mg/L	0.010						
Selenium	2.10E-05	mg/L	0.0050						
Thallium	4.00E-06	mg/L	0.10						
Sample ID: CCV -ME060130E,ME050	Continuing Calibration Verification Standard								05/12/06 03:23
Antimony	0.0485	mg/L	0.050	97	89.5	110.5			
Arsenic	0.0493	mg/L	0.0050	99	89.5	110.5			
Lead	0.0495	mg/L	0.010	99	89.5	110.5			
Selenium	0.0492	mg/L	0.0050	98	89.5	110.5			
Thallium	0.0491	mg/L	0.10	98	89.5	110.5			
Sample ID: CCB	Continuing Calibration Blank								05/12/06 05:06
Antimony	2.50E-05	mg/L	0.050						
Arsenic	6.90E-05	mg/L	0.0050						
Lead	1.10E-05	mg/L	0.010						
Selenium	-0.000189	mg/L	0.0050						
Thallium	4.00E-06	mg/L	0.10						
Sample ID: CCV -ME060130E,ME050	Continuing Calibration Verification Standard								05/12/06 05:14
Antimony	0.0488	mg/L	0.050	98	89.5	110.5			
Arsenic	0.0489	mg/L	0.0050	98	89.5	110.5			
Lead	0.0490	mg/L	0.010	98	89.5	110.5			
Selenium	0.0497	mg/L	0.0050	99	89.5	110.5			
Thallium	0.0489	mg/L	0.10	98	89.5	110.5			

Qualifiers:

RL - Analyte reporting limit.

ND - Not detected at the reporting limit.

ENERGY LABORATORIES, INC. • P.O. Box 30916 • 1120 South 27th Street • Billings, MT 59107-0916
800-735-4489 • 406-252-6325 • 406-252-6069 fax • eli@energylab.com

QA/QC Summary Report

Client: Alpha Analytical Labs
Project:

Report Date: 06/12/06
Work Order: B06050736

Analyte	Result	Units	RL	%REC	Low Limit	High Limit	RPD	RPDLimit	Qual
Method: E245.1									Batch: 21023
Sample ID: B06050869-001BMS	Sample Matrix Spike				Run: HGCV201-B_060510A				05/10/06 11:38
Mercury	0.00192	mg/L	0.0010	96	70	130			
Sample ID: B06050869-001BMSD	Sample Matrix Spike Duplicate				Run: HGCV201-B_060510A				05/10/06 11:41
Mercury	0.00192	mg/L	0.0010	96	70	130	0.0	30	
Sample ID: MB-21023	Method Blank				Run: HGCV201-B_060511A				05/11/06 11:07
Mercury	ND	mg/L	5E-05						
Sample ID: LCS-21023	Laboratory Control Sample				Run: HGCV201-B_060511A				05/11/06 11:09
Mercury	0.00187	mg/L	0.0010	94	90	110			
Sample ID: B06050641-001BMS	Sample Matrix Spike				Run: HGCV201-B_060511A				05/11/06 11:14
Mercury	0.00177	mg/L	0.0010	89	70	130			
Sample ID: B06050641-001BMSD	Sample Matrix Spike Duplicate				Run: HGCV201-B_060511A				05/11/06 11:16
Mercury	0.00184	mg/L	0.0010	92	70	130	3.9	30	
Sample ID: B06050720-001CMS	Sample Matrix Spike				Run: HGCV201-B_060511A				05/11/06 11:57
Mercury	0.0019	mg/L	0.0010	94	70	130			
Sample ID: B06050720-001CMSD	Sample Matrix Spike Duplicate				Run: HGCV201-B_060511A				05/11/06 11:59
Mercury	0.0018	mg/L	0.0010	88	70	130	6.6	30	

Qualifiers:

RL - Analyte reporting limit.

ND - Not detected at the reporting limit.

ENERGY LABORATORIES, INC. • P.O. Box 30916 • 1120 South 27th Street • Billings, MT 59107-0916
800-735-4489 • 406-252-6325 • 406-252-6069 fax • eli@energylab.com

QA/QC Summary Report

Client: Alpha Analytical Labs
Project:

Report Date: 06/12/06
Work Order: B06050736

Analyte	Result	Units	RL	%REC	Low Limit	High Limit	RPD	RPDLimit	Qual
Method: E245.1							Analytical Run: HGCV201-B_060511A		
Sample ID: QCS	Initial Calibration Verification Standard								05/11/06 11:00
Mercury	0.00185	mg/L	0.0010	94	90	110			
Sample ID: CCV	Continuing Calibration Verification Standard								05/11/06 11:02
Mercury	0.00253	mg/L	0.0010	101	90	110			
Sample ID: CCB	Continuing Calibration Blank								05/11/06 11:05
Mercury	2.00E-05	mg/L	0.0010						
Sample ID: CCV	Continuing Calibration Verification Standard								05/11/06 11:28
Mercury	0.00253	mg/L	0.0010	101	90	110			
Sample ID: CCB	Continuing Calibration Blank								05/11/06 11:31
Mercury	2.00E-05	mg/L	0.0010						
Sample ID: CCV	Continuing Calibration Verification Standard								05/11/06 11:38
Mercury	0.00238	mg/L	0.0010	95	90	110			
Sample ID: CCB	Continuing Calibration Blank								05/11/06 11:40
Mercury	1.00E-05	mg/L	0.0010						
Sample ID: CCV	Continuing Calibration Verification Standard								05/11/06 12:06
Mercury	0.00255	mg/L	0.00020	102	90	110			
Sample ID: CCB	Continuing Calibration Blank								05/11/06 12:09
Mercury	1.00E-05	mg/L	0.00020						

Qualifiers:

RL - Analyte reporting limit.

ND - Not detected at the reporting limit.

ENERGY LABORATORIES, INC. • P.O. Box 30916 • 1120 South 27th Street • Billings, MT 59107-0916
800-735-4489 • 406-252-6325 • 406-252-6069 fax • eli@energylab.com

QA/QC Summary Report

Client: Alpha Analytical Labs
Project:

Report Date: 06/12/06
Work Order: B06050736

Analyte	Result	Units	RL	%REC	Low Limit	High Limit	RPD	RPDLimit	Qual
Method: E300.0								Analytical Run: IC202-B_060510A	
Sample ID: ICV	Initial Calibration Verification Standard							05/10/06 10:09	
Chloride	24.6	mg/L	1.0	98	90	110			
Sulfate	99.0	mg/L	1.0	99	90	110			
Sample ID: CCV	Continuing Calibration Verification Standard							05/10/06 12:29	
Chloride	24.1	mg/L	1.0	96	90	110			
Sulfate	97.2	mg/L	1.0	97	90	110			
Sample ID: CCB	Continuing Calibration Blank							05/10/06 12:40	
Chloride	0.0890	mg/L	1.0						
Sulfate	0.0110	mg/L	1.0						
Sample ID: CCV	Continuing Calibration Verification Standard							05/10/06 14:48	
Chloride	24.0	mg/L	1.0	96	90	110			
Sulfate	97.2	mg/L	1.0	97	90	110			
Sample ID: CCB	Continuing Calibration Blank							05/10/06 15:00	
Chloride	0.0750	mg/L	1.0						
Sulfate	0.0100	mg/L	1.0						
Sample ID: CCV	Continuing Calibration Verification Standard							05/10/06 17:08	
Chloride	24.3	mg/L	1.0	97	90	110			
Sulfate	99.8	mg/L	1.0	100	90	110			
Sample ID: CCB	Continuing Calibration Blank							05/10/06 17:19	
Chloride	0.0910	mg/L	1.0						
Sulfate	0.00800	mg/L	1.0						
Method: E300.0								Batch: R75525	
Sample ID: ICB	Method Blank				Run: IC202-B_060510A			05/10/06 10:21	
Chloride	0.08	mg/L	0.04						
Sulfate	ND	mg/L	0.08						
Sample ID: LFB	Laboratory Fortified Blank				Run: IC202-B_060510A			05/10/06 10:32	
Chloride	9.31	mg/L	1.0	92	90	110			
Sulfate	37.8	mg/L	1.0	94	90	110			
Sample ID: B06050720-002BMS	Sample Matrix Spike				Run: IC202-B_060510A			05/10/06 12:17	
Chloride	35.4	mg/L	1.0	98	80	120			
Sulfate	147	mg/L	1.0	102	80	120			
Sample ID: B06050720-002BMSD	Sample Matrix Spike Duplicate				Run: IC202-B_060510A			05/10/06 12:52	
Chloride	35.2	mg/L	1.0	97	80	120	0.7	20	

Qualifiers:

RL - Analyte reporting limit.

ND - Not detected at the reporting limit.

ENERGY LABORATORIES, INC. • P.O. Box 30916 • 1120 South 27th Street • Billings, MT 59107-0916
800-735-4489 • 406-252-6325 • 406-252-6069 fax • eli@energylab.com

QA/QC Summary Report

Client: Alpha Analytical Labs
Project:

Report Date: 06/12/06
Work Order: B06050736

Analyte	Result	Units	RL	%REC	Low Limit	High Limit	RPD	RPDLimit	Qual
Method: E300.0									Batch: R75525
Sample ID: B06050720-002BMSD	Sample Matrix Spike Duplicate				Run: IC202-B_060510A				05/10/06 12:52
Sulfate	148	mg/L	1.0	103	80	120	0.6	20	
Sample ID: B06050916-001AMS	Sample Matrix Spike				Run: IC202-B_060510A				05/10/06 15:23
Chloride	135	mg/L	1.0		80	120			A
Sulfate	325	mg/L	1.0	103	80	120			
Sample ID: B06050916-001AMSD	Sample Matrix Spike Duplicate				Run: IC202-B_060510A				05/10/06 15:35
Chloride	135	mg/L	1.0		80	120	0.1	20	A
Sulfate	326	mg/L	1.0	103	80	120	0.2	20	
Method: E353.2									Analytical Run: FIA203-B_060510B
Sample ID: ICV	Initial Calibration Verification Standard								05/10/06 09:43
Nitrogen, Nitrate+Nitrite as N	6.36	mg/L	0.050	94	90	110			
Sample ID: CCB	Continuing Calibration Blank								05/10/06 10:04
Nitrogen, Nitrate+Nitrite as N	0.00200	mg/L	0.050						
Sample ID: CCV	Continuing Calibration Verification Standard								05/10/06 10:05
Nitrogen, Nitrate+Nitrite as N	0.992	mg/L	0.050	99	90	110			
Method: E353.2									Batch: R75462
Sample ID: MBLK	Method Blank				Run: FIA203-B_060510B				05/10/06 09:44
Nitrogen, Nitrate+Nitrite as N	0.009	mg/L	0.006						
Sample ID: LFB	Laboratory Fortified Blank				Run: FIA203-B_060510B				05/10/06 09:45
Nitrogen, Nitrate+Nitrite as N	0.972	mg/L	0.050	98	90	110			
Sample ID: B06050736-001EMS	Sample Matrix Spike				Run: FIA203-B_060510B				05/10/06 09:51
Nitrogen, Nitrate+Nitrite as N	1.11	mg/L	0.050	97	90	110			
Sample ID: B06050736-001EMSD	Sample Matrix Spike Duplicate				Run: FIA203-B_060510B				05/10/06 09:52
Nitrogen, Nitrate+Nitrite as N	1.14	mg/L	0.050	99	90	110	2.1	10	

Qualifiers:

RL - Analyte reporting limit.

ND - Not detected at the reporting limit.

A - The analyte level was greater than four times the spike level. In accordance with the method % recovery is not calculated.

ENERGY LABORATORIES, INC. • P.O. Box 30916 • 1120 South 27th Street • Billings, MT 59107-0916
800-735-4489 • 406-252-6325 • 406-252-6069 fax • eli@energylab.com

QA/QC Summary Report

Client: Alpha Analytical Labs
Project:

Report Date: 06/12/06
Work Order: B06050736

Analyte	Result	Units	RL	%REC	Low Limit	High Limit	RPD	RPDLimit	Qual
Method: E376.2								Batch: 060510A-SULFIDE-MB-W	
Sample ID: B06050496-001DDUP	Sample Duplicate				Run: SPEC_060510A			05/10/06 09:00	
Sulfide	0.0510	mg/L	0.040				5.7	20	
Sample ID: B06050560-001DMS	Sample Matrix Spike				Run: SPEC_060510A			05/10/06 09:00	
Sulfide	0.221	mg/L	0.040	85	70	130			
Sample ID: B06050560-001DMSD	Sample Matrix Spike Duplicate				Run: SPEC_060510A			05/10/06 09:00	
Sulfide	0.231	mg/L	0.040	90	70	130	4.4	30	
Sample ID: LFB1_060510A	Laboratory Fortified Blank				Run: SPEC_060510A			05/10/06 09:00	
Sulfide	0.210	mg/L	0.040	102	70	130			

Qualifiers:

RL - Analyte reporting limit.

ND - Not detected at the reporting limit.

ENERGY LABORATORIES, INC. • P.O. Box 30916 • 1120 South 27th Street • Billings, MT 59107-0916
800-735-4489 • 406-252-6325 • 406-252-6069 fax • eli@energylab.com

QA/QC Summary Report

Client: Alpha Analytical Labs
Project:

Report Date: 06/12/06
Work Order: B06050736

Analyte	Result	Units	RL	%REC	Low Limit	High Limit	RPD	RPDLimit	Qual
Method: E505									Batch: C_10960
Sample ID: LCS-10960	Laboratory Control Sample				Run: SUB-C66602				05/12/06 17:05
Alachlor	2.55	ug/L	0.10	102	70	130			
Aldrin	0.244	ug/L	0.010	98	70	130			
gamma-BHC (Lindane)	0.227	ug/L	0.010	91	70	130			
alpha-Chlordane	0.242	ug/L	0.010	97	70	130			
gamma-Chlordane	0.249	ug/L	0.010	100	70	130			
Dieldrin	0.246	ug/L	0.010	98	70	130			
Endrin	0.287	ug/L	0.010	115	70	130			
Heptachlor	0.252	ug/L	0.010	101	70	130			
Heptachlor epoxide	0.238	ug/L	0.010	95	70	130			
Hexachlorobenzene	0.234	ug/L	0.010	94	70	130			
Hexachlorocyclopentadiene	0.203	ug/L	0.10	81	70	130			
Methoxychlor	1.33	ug/L	0.050	106	70	130			
Surr: Tetrachloro-m-xylene			0.010	115	40	150			
Surr: Decachlorobiphenyl			0.010	95	40	150			
Sample ID: MB-10960	Method Blank				Run: SUB-C66602				05/12/06 18:27
Alachlor	ND	ug/L	0.10						
Aldrin	ND	ug/L	0.010						
Aroclor 1016	ND	ug/L	0.080						
Aroclor 1221	ND	ug/L	2.0						
Aroclor 1232	ND	ug/L	0.50						
Aroclor 1242	ND	ug/L	0.30						
Aroclor 1248	ND	ug/L	0.10						
Aroclor 1254	ND	ug/L	0.10						
Aroclor 1260	ND	ug/L	0.20						
gamma-BHC (Lindane)	ND	ug/L	0.010						
Chlordane	ND	ug/L	0.20						
Dieldrin	ND	ug/L	0.010						
Endrin	ND	ug/L	0.010						
Heptachlor	ND	ug/L	0.010						
Heptachlor epoxide	ND	ug/L	0.010						
Hexachlorobenzene	ND	ug/L	0.010						
Hexachlorocyclopentadiene	ND	ug/L	0.10						
Methoxychlor	ND	ug/L	0.050						
Toxaphene	ND	ug/L	1.0						
Surr: Tetrachloro-m-xylene			0.010	120	60	140			
Surr: Decachlorobiphenyl			0.010	110	60	140			
Sample ID: C06050497-001GMS	Sample Matrix Spike				Run: SUB-C66602				05/13/06 00:00
Alachlor	2.57	ug/L	0.10	103	65	135			
Aldrin	0.265	ug/L	0.010	106	65	135			

Qualifiers:

RL - Analyte reporting limit.

ND - Not detected at the reporting limit.

ENERGY LABORATORIES, INC. • P.O. Box 30916 • 1120 South 27th Street • Billings, MT 59107-0916
800-735-4489 • 406-252-6325 • 406-252-6069 fax • eli@energylab.com

QA/QC Summary Report

Client: Alpha Analytical Labs
Project:

Report Date: 06/12/06
Work Order: B06050736

Analyte	Result	Units	RL	%REC	Low Limit	High Limit	RPD	RPDLimit	Qual
Method: E505									Batch: C_10960
Sample ID: C06050497-001GMS	Sample Matrix Spike				Run: SUB-C66602				05/13/06 00:00
gamma-BHC (Lindane)	0.229	ug/L	0.010	92	65	135			
Dieldrin	0.260	ug/L	0.010	104	65	135			
Endrin	0.305	ug/L	0.010	122	65	135			
Heptachlor	0.262	ug/L	0.010	105	65	135			
Heptachlor epoxide	0.247	ug/L	0.010	99	65	135			
Hexachlorobenzene	0.240	ug/L	0.010	96	65	135			
Hexachlorocyclopentadiene	0.226	ug/L	0.10	90	65	135			
Methoxychlor	1.25	ug/L	0.050	100	65	135			
Surr: Tetrachloro-m-xylene			0.010	124	40	150			
Surr: Decachlorobiphenyl			0.010	113	40	150			
Method: E505									Analytical Run: SUB-C66602
Sample ID: CCV-10960	Continuing Calibration Verification Standard								05/13/06 04:09
Alachlor	2.57	ug/L	0.10	103	70	130			
Aldrin	0.267	ug/L	0.010	107	70	130			
Aroclor 1016	ND	ug/L	0.080		70	130			
Aroclor 1221	ND	ug/L	2.0		70	130			
Aroclor 1232	ND	ug/L	0.50		70	130			
Aroclor 1242	ND	ug/L	0.30		70	130			
Aroclor 1248	ND	ug/L	0.10		70	130			
Aroclor 1254	ND	ug/L	0.10		70	130			
Aroclor 1260	ND	ug/L	0.20		70	130			
gamma-BHC (Lindane)	0.266	ug/L	0.010	106	70	130			
Dieldrin	0.270	ug/L	0.010	108	70	130			
Endrin	0.271	ug/L	0.010	108	70	130			
Heptachlor	0.272	ug/L	0.010	109	70	130			
Heptachlor epoxide	0.273	ug/L	0.010	109	70	130			
Hexachlorobenzene	0.272	ug/L	0.010	109	70	130			
Hexachlorocyclopentadiene	0.277	ug/L	0.10	111	70	130			
Methoxychlor	1.22	ug/L	0.050	98	70	130			
Surr: Tetrachloro-m-xylene			0.010	114	40	150			
Surr: Decachlorobiphenyl			0.010	101	40	150			

Qualifiers:

RL - Analyte reporting limit.

ND - Not detected at the reporting limit.

ENERGY LABORATORIES, INC. • P.O. Box 30916 • 1120 South 27th Street • Billings, MT 59107-0916
800-735-4489 • 406-252-6325 • 406-252-6069 fax • eli@energylab.com

QA/QC Summary Report

Client: Alpha Analytical Labs
Project:

Report Date: 06/12/06
Work Order: B06050736

Analyte	Result	Units	RL	%REC	Low Limit	High Limit	RPD	RPDLimit	Qual
Method: E515.1									Batch: 21103
Sample ID: LCS-21103	Laboratory Control Sample				Run: CECD.I_060520B				05/20/06 22:33
2,4-D	3.93	ug/L	1.0	79	70	130			
2,4-DB	3.75	ug/L	2.5	75	70	130			
Dalapon	3.97	ug/L	2.5	79	70	130			
Dicamba	4.04	ug/L	0.25	81	70	130			
Dichlorprop	4.59	ug/L	1.0	92	70	130			
Dinoseb	2.80	ug/L	1.0	56	70	130			S
Pentachlorophenol	3.65	ug/L	0.040	73	70	130			
Picloram	3.61	ug/L	0.50	72	70	130			
2,4,5-TP (Silvex)	4.03	ug/L	0.20	81	70	130			
Surr: DCAA			0.10	71	70	130			
The recovery for Dinoseb is within USEPA Water Study performance acceptance limits.									
Sample ID: B06050552-001IMS	Sample Matrix Spike				Run: CECD.I_060520B				05/21/06 00:01
2,4-D	3.92	ug/L	1.0	78	65	135			
2,4-DB	4.55	ug/L	2.5	91	65	135			
Dalapon	3.50	ug/L	2.5	70	65	135			
Dicamba	4.05	ug/L	0.25	81	65	135			
Dichlorprop	4.78	ug/L	1.0	96	65	135			
Dinoseb	3.09	ug/L	1.0	62	65	135			S
Pentachlorophenol	3.52	ug/L	0.040	70	65	135			
Picloram	3.77	ug/L	0.50	75	65	135			
2,4,5-TP (Silvex)	4.21	ug/L	0.20	84	65	135			
Surr: DCAA			0.10	76	70	130			
Sample ID: B06050552-001IMSD	Sample Matrix Spike Duplicate				Run: CECD.I_060520B				05/21/06 00:30
2,4-D	4.45	ug/L	1.0	89	65	135	13	40	
2,4-DB	5.40	ug/L	2.5	108	65	135	17	40	
Dalapon	4.02	ug/L	2.5	80	65	135	14	40	
Dicamba	4.51	ug/L	0.25	90	65	135	11	40	
Dichlorprop	5.38	ug/L	1.0	108	65	135	12	40	
Dinoseb	3.40	ug/L	1.0	68	65	135	9.6	40	
Pentachlorophenol	4.05	ug/L	0.040	81	65	135	14	40	
Picloram	3.98	ug/L	0.50	80	65	135	5.4	40	
2,4,5-TP (Silvex)	4.62	ug/L	0.20	92	65	135	9.3	40	
Surr: DCAA			0.10	85	70	130			
Sample ID: MB-21103	Method Blank				Run: CECD.I_060520B				05/21/06 14:46
2,4-D	ND	ug/L	1.0						
2,4-DB	ND	ug/L	2.5						
Dalapon	ND	ug/L	2.5						
Dicamba	ND	ug/L	0.25						
Dichlorprop	ND	ug/L	1.0						

Qualifiers:

RL - Analyte reporting limit.
ND - Not detected at the reporting limit.
S - Spike recovery outside of advisory limits.

ENERGY LABORATORIES, INC. • P.O. Box 30916 • 1120 South 27th Street • Billings, MT 59107-0916
800-735-4489 • 406-252-6325 • 406-252-6069 fax • eli@energylab.com

QA/QC Summary Report

Client: Alpha Analytical Labs
Project:

Report Date: 06/12/06
Work Order: B06050736

Analyte	Result	Units	RL	%REC	Low Limit	High Limit	RPD	RPDLimit	Qual
Method: E515.1									Batch: 21103
Sample ID: MB-21103	Method Blank				Run: CECD.I_060520B				05/21/06 14:46
Dinoseb	ND	ug/L	1.0						
Pentachlorophenol	ND	ug/L	0.040						
Picloram	ND	ug/L	0.50						
2,4,5-TP (Silvex)	ND	ug/L	0.20						
Surr: DCAA			0.10	81	70	130			

Qualifiers:

RL - Analyte reporting limit.

ND - Not detected at the reporting limit.

ENERGY LABORATORIES, INC. • P.O. Box 30916 • 1120 South 27th Street • Billings, MT 59107-0916
800-735-4489 • 406-252-6325 • 406-252-6069 fax • eli@energylab.com

QA/QC Summary Report

Client: Alpha Analytical Labs
Project:

Report Date: 06/12/06
Work Order: B06050736

Analyte	Result	Units	RL	%REC	Low Limit	High Limit	RPD	RPDLimit	Qual
Method: E515.1								Analytical Run: CECD.I_060520B	
Sample ID: 8151CK8	Continuing Calibration Verification Standard								05/20/06 21:34
2,4-D	0.506	ug/L	1.0	101	80	120			
2,4-DB	0.485	ug/L	2.5	97	80	120			
Dalapon	0.491	ug/L	2.5	98	80	120			
Dicamba	0.497	ug/L	0.25	99	80	120			
Dichlorprop	0.505	ug/L	1.0	101	80	120			
Dinoseb	0.499	ug/L	1.0	100	80	120			
Pentachlorophenol	0.483	ug/L	0.040	97	80	120			
Picloram	0.516	ug/L	0.50	103	80	120			
2,4,5-TP (Silvex)	0.500	ug/L	0.20	100	80	120			
Surr: DCAA			0.10	100	80	120			
Sample ID: 8151CK8	Continuing Calibration Verification Standard								05/21/06 02:57
2,4-D	0.524	ug/L	1.0	105	80	120			
2,4-DB	0.483	ug/L	2.5	97	80	120			
Dalapon	0.519	ug/L	2.5	104	80	120			
Dicamba	0.521	ug/L	0.25	104	80	120			
Dichlorprop	0.527	ug/L	1.0	105	80	120			
Dinoseb	0.510	ug/L	1.0	102	80	120			
Pentachlorophenol	0.504	ug/L	0.040	101	80	120			
Picloram	0.539	ug/L	0.50	108	80	120			
2,4,5-TP (Silvex)	0.518	ug/L	0.20	104	80	120			
Surr: DCAA			0.10	104	80	120			
Sample ID: 8151CK8	Continuing Calibration Verification Standard								05/21/06 07:52
2,4-D	0.498	ug/L	1.0	100	80	120			
2,4-DB	0.460	ug/L	2.5	92	80	120			
Dalapon	0.496	ug/L	2.5	99	80	120			
Dicamba	0.502	ug/L	0.25	100	80	120			
Dichlorprop	0.505	ug/L	1.0	101	80	120			
Dinoseb	0.493	ug/L	1.0	99	80	120			
Pentachlorophenol	0.484	ug/L	0.040	97	80	120			
Picloram	0.510	ug/L	0.50	102	80	120			
2,4,5-TP (Silvex)	0.496	ug/L	0.20	99	80	120			
Surr: DCAA			0.10	100	80	120			
Sample ID: 8151CK8	Continuing Calibration Verification Standard								05/21/06 17:13
2,4-D	0.483	ug/L	1.0	97	80	120			
2,4-DB	0.449	ug/L	2.5	90	80	120			
Dalapon	0.478	ug/L	2.5	96	80	120			
Dicamba	0.485	ug/L	0.25	97	80	120			
Dichlorprop	0.492	ug/L	1.0	98	80	120			

Qualifiers:

RL - Analyte reporting limit.

ND - Not detected at the reporting limit.

ENERGY LABORATORIES, INC. • P.O. Box 30916 • 1120 South 27th Street • Billings, MT 59107-0916
800-735-4489 • 406-252-6325 • 406-252-6069 fax • eli@energylab.com

QA/QC Summary Report

Client: Alpha Analytical Labs
Project:

Report Date: 06/12/06
Work Order: B06050736

Analyte	Result	Units	RL	%REC	Low Limit	High Limit	RPD	RPDLimit	Qual
Method: E515.1								Analytical Run: CECD.I_060520B	
Sample ID: 8151CK8	Continuing Calibration Verification Standard							05/21/06 17:13	
Dinoseb	0.480	ug/L	1.0	96	80	120			
Pentachlorophenol	0.471	ug/L	0.040	94	80	120			
Picloram	0.488	ug/L	0.50	98	80	120			
2,4,5-TP (Silvex)	0.482	ug/L	0.20	96	80	120			
Surr: DCAA			0.10	97	80	120			

Qualifiers:

RL - Analyte reporting limit.

ND - Not detected at the reporting limit.

ENERGY LABORATORIES, INC. • P.O. Box 30916 • 1120 South 27th Street • Billings, MT 59107-0916
800-735-4489 • 406-252-6325 • 406-252-6069 fax • eli@energylab.com

QA/QC Summary Report

Client: Alpha Analytical Labs
Project:

Report Date: 06/12/06
Work Order: B06050736

Analyte	Result	Units	RL	%REC	Low Limit	High Limit	RPD	RPDLimit	Qual
Method: E524.2							Analytical Run: VOASATURN_060515A		
Sample ID: CCV	Continuing Calibration Verification Standard								05/15/06 16:20
Benzene	5.68	ug/L	0.50	114	70	130			
Bromobenzene	5.60	ug/L	0.50	112	70	130			
Bromochloromethane	5.52	ug/L	0.50	110	70	130			
Bromodichloromethane	5.56	ug/L	0.50	111	70	130			
Bromoform	5.56	ug/L	0.50	111	70	130			
Bromomethane	5.00	ug/L	0.50	100	70	130			
n-Butylbenzene	5.80	ug/L	0.50	116	70	130			
sec-Butylbenzene	6.00	ug/L	0.50	120	70	130			
tert-Butylbenzene	6.16	ug/L	0.50	123	70	130			
Carbon tetrachloride	5.88	ug/L	0.50	118	70	130			
1,2-Dichloroethane	5.48	ug/L	0.50	110	70	130			
Chlorobenzene	5.48	ug/L	0.50	110	70	130			
Chlorodibromomethane	5.44	ug/L	0.50	109	70	130			
Chloroethane	4.92	ug/L	0.50	98	70	130			
Chloroform	5.64	ug/L	0.50	113	70	130			
Chloromethane	4.84	ug/L	0.50	97	70	130			
2-Chlorotoluene	5.68	ug/L	0.50	114	70	130			
4-Chlorotoluene	6.08	ug/L	0.50	122	70	130			
1,2-Dibromo-3-chloropropane	5.64	ug/L	1.0	113	70	130			
Dibromomethane	5.48	ug/L	0.50	110	70	130			
1,2-Dichlorobenzene	6.00	ug/L	0.50	120	70	130			
1,3-Dichlorobenzene	6.24	ug/L	0.50	125	70	130			
1,4-Dichlorobenzene	5.92	ug/L	0.50	118	70	130			
Dichlorodifluoromethane	4.52	ug/L	0.50	90	70	130			
1,1-Dichloroethane	5.76	ug/L	0.50	115	70	130			
1,2-Dibromoethane	5.12	ug/L	0.50	102	70	130			
1,1-Dichloroethene	6.20	ug/L	0.50	124	70	130			
cis-1,2-Dichloroethene	5.72	ug/L	0.50	114	70	130			
trans-1,2-Dichloroethene	5.80	ug/L	0.50	116	70	130			
1,2-Dichloropropane	5.32	ug/L	0.50	106	70	130			
1,3-Dichloropropane	5.60	ug/L	0.50	112	70	130			
2,2-Dichloropropane	5.92	ug/L	0.50	118	70	130			
1,1-Dichloropropene	5.60	ug/L	0.50	112	70	130			
cis-1,3-Dichloropropene	5.68	ug/L	0.50	114	70	130			
trans-1,3-Dichloropropene	5.28	ug/L	0.50	106	70	130			
Ethylbenzene	5.32	ug/L	0.50	106	70	130			
Hexachlorobutadiene	4.84	ug/L	0.50	97	70	130			
Isopropylbenzene	6.04	ug/L	0.50	121	70	130			
p-Isopropyltoluene	6.04	ug/L	0.50	121	70	130			
Methyl tert-butyl ether (MTBE)	4.76	ug/L	0.50	95	70	130			

Qualifiers:

RL - Analyte reporting limit.

ND - Not detected at the reporting limit.

ENERGY LABORATORIES, INC. • P.O. Box 30916 • 1120 South 27th Street • Billings, MT 59107-0916
800-735-4489 • 406-252-6325 • 406-252-6069 fax • eli@energylab.com

QA/QC Summary Report

Client: Alpha Analytical Labs
Project:

Report Date: 06/12/06
Work Order: B06050736

Analyte	Result	Units	RL	%REC	Low Limit	High Limit	RPD	RPDLimit	Qual
Method: E524.2								Analytical Run: VOASATURN_060515A	
Sample ID: CCV	Continuing Calibration Verification Standard								05/15/06 16:20
Methylene chloride	5.68	ug/L	0.50	114	70	130			
Naphthalene	5.60	ug/L	0.50	112	70	130			
n-Propylbenzene	5.96	ug/L	0.50	119	70	130			
Styrene	5.52	ug/L	0.50	110	70	130			
1,1,1,2-Tetrachloroethane	5.80	ug/L	0.50	116	70	130			
1,1,2,2-Tetrachloroethane	5.72	ug/L	0.50	114	70	130			
Tetrachloroethene	5.08	ug/L	0.50	102	70	130			
Toluene	5.60	ug/L	0.50	112	70	130			
1,2,3-Trichlorobenzene	4.96	ug/L	0.50	99	70	130			
1,2,4-Trichlorobenzene	4.96	ug/L	0.50	99	70	130			
1,1,1-Trichloroethane	5.84	ug/L	0.50	117	70	130			
1,1,2-Trichloroethane	5.04	ug/L	0.50	101	70	130			
Trichloroethene	5.16	ug/L	0.50	103	70	130			
Trichlorofluoromethane	5.32	ug/L	0.50	106	70	130			
1,2,3-Trichloropropane	4.60	ug/L	0.50	92	70	130			
1,2,4-Trimethylbenzene	6.04	ug/L	0.50	121	70	130			
1,3,5-Trimethylbenzene	6.16	ug/L	0.50	123	70	130			
Vinyl chloride	5.08	ug/L	0.50	102	70	130			
m+p-Xylenes	11.0	ug/L	0.50	110	70	130			
o-Xylene	5.72	ug/L	0.50	114	70	130			
Trihalomethanes, Total	22.2	ug/L	0.50		0	0			
Xylenes, Total	16.7	ug/L	0.50		0	0			
Surr: p-Bromofluorobenzene			0.50	99	80	120			
Surr: 1,2-Dichloroethane-d4			0.50	92	74	127			
Surr: Toluene-d8			0.50	91	80	120			
Method: E524.2									Batch: R75900
Sample ID: LCS	Laboratory Control Sample				Run: VOASATURN_060515A				05/15/06 16:52
Benzene	5.68	ug/L	0.50	114	70	130			
Bromobenzene	4.92	ug/L	0.50	98	70	130			
Bromochloromethane	5.76	ug/L	0.50	115	70	130			
Bromodichloromethane	5.20	ug/L	0.50	104	70	130			
Bromoform	5.36	ug/L	0.50	107	70	130			
Bromomethane	6.04	ug/L	0.50	121	70	130			
n-Butylbenzene	5.28	ug/L	0.50	106	70	130			
sec-Butylbenzene	5.20	ug/L	0.50	104	70	130			
tert-Butylbenzene	5.24	ug/L	0.50	105	70	130			
Carbon tetrachloride	5.72	ug/L	0.50	114	70	130			
1,2-Dichloroethane	5.48	ug/L	0.50	110	70	130			
Chlorobenzene	5.12	ug/L	0.50	102	70	130			

Qualifiers:

RL - Analyte reporting limit.

ND - Not detected at the reporting limit.

Appendix D

State of Montana Well Filings

Form No. 602 R 6/11/2005

NOTICE OF COMPLETION OF GROUNDWATER DEVELOPMENT

Use this form for a completed groundwater development with a maximum use of 35 GPM not to exceed 10 AC-FT per year.

Filing Fee $50.00

FOR DEPARTMENT USE ONLY

Notice No. _____ Basin _____
Priority Date _____ Time _____ AM / PM
Rec'd By _____
Fee Rec'd $ _____ Check No. _____
Deposit Receipt # _____
Payor _____
Refund $ _____ Date _____

- Go to web site http://dnrc.mt.gov/wrd/water_rts/wr_general_info/wrforms/wr_forms.asp to learn additional information about the use of this form.
- Your priority is determined by the date of filing. If it is determined this form was improperly filed, your priority date may be changed.
- If your development is within a Controlled Ground Water Area, the regional office will contact you to explain the correct filing requirements.

READ AND ANSWER THE QUESTIONS BELOW TO DETERMINE IF YOU CAN FILE YOUR WATER USE ON THIS FORM.

A. ☑ Yes ☐ No My source of water is ground water and it has been put to use.
B. ☑ Yes ☐ No My water use is 35 gallons per minute or less.
C. ☑ Yes ☐ No The total volume used from this development will not exceed 10 acre-feet per year.

If the answer to all of the above questions is "yes", you can file this form. Complete the information below.

1. NAME MELVIN G. AND LORAH L. PARKER
MAILING ADDRESS 5000 HIGHWAY 37
CITY LIBBY STATE MT ZIP 59923
WORK PHONE _____ HOME PHONE 406 293-9705 CELL PHONE _____

2. DIVERSION USED TO OBTAIN GROUNDWATER
☑ Well – Attach well log, if available
☐ Developed Spring (Excavation performed at the spring location.)
☐ Pit/Pond - Dimensions in feet _____ Length _____ Width _____ Depth

3. PURPOSE AND PERIOD OF USE – Check the appropriate purposes and provide the period of use.
☑ Domestic - This purpose includes up to 3 acres of lawn and garden
Used January 1 - December 31 ☐ Yes ☐ No If no, from _____ to _____
☐ Irrigation - If the total size of the area that is irrigated is larger than 3 acres, complete this information.
Used April 1 - October 31 ☐ Yes ☐ No If no, from _____ to _____
☐ Stock Used January 1 - December 31 ☐ Yes ☐ No If no, from _____ to _____
☐ Other – Describe the purpose _____
Used January 1 - December 31 ☐ Yes ☐ No If no, from _____ to _____

4. POINT OF DIVERSION – Location of Ground water Development
___ 1/4 NW 1/4 NE 1/4 Section 32 Twp 31 N / S Rge 30 E / W County LINCOLN
Lot _____ Block _____ Tract No. _____ Subdivision Name _____
Government Lot No. _____ COS No. _____
Street or Road Address, Including City, State & Zip Code of the Development _____

5. PLACE OF USE
Is the place where water is used the same as the point of diversion? ☑ Yes ☐ No
If no, enter the land description below.
☐ Domestic ☐ Stock ☐ Irrigation ☐ Other
___ 1/4 ___ 1/4 ___ 1/4 Section ___ Twp ___ N / S Rge ___ E / W County _____
Lot _____ Block _____ Tract No. _____ Subdivision Name _____
Government Lot No. _____ COS No. _____
Street or Road Address, Including City, State & Zip Code of the Place of Use _____

6. AFFIDAVIT OF OWNERSHIP OR WRITTEN CONSENT
I have possessory interest in the property where the water has been put to beneficial use and I have the exclusive property rights in the ground water development works
OR
I have attached written consent of the person owning the ground water development works and/or written notification to the land owner pursuant to MCA 85-2-306(1).

The statements appearing here are to the best of my knowledge true and correct.

Appropriator's signature _____ Date: _____

_____ Date: _____

Form 634 R 07/18/2003 (Pursuant to 85-2-402(15))

REPLACEMENT WELL NOTICE

Use this form to inform the DNRC of a well that has been replaced. For municipal wells that do not exceed 450 gpm or for all other wells that do not exceed 35 gpm and 10 ac-ft per year.

WATER RIGHT: Attach a copy of the existing water right.
WELL LOG: Attach a copy of the well log for the new well. Also attach a copy of the old well log, if available.
MAP: Attach a map showing the new & old well locations.

FILING FEE: $50.00

FOR DEPARTMENT USE ONLY

Notice No. _____ Basin _____
Date Received _____ Time _____ AM / PM
Rec'd By _____
Fee Rec'd $ _____ Check # _____
Deposit Receipt # _____
Payor _____
Refund $ _____ Date _____

If your development is within a Controlled Ground Water Area, the regional office will contact you to explain the correct filing requirements.

READ AND ANSWER THE QUESTIONS BELOW TO DETERMINE IF YOU CAN FILE YOUR WATER USE ON THIS FORM.

☑ Yes ☐ No Is the groundwater aquifer the same for the new well and the old well?
☑ Yes ☐ No Is the flow rate used from the new well the same or less than the maximum flow rate of the old well?
☑ Yes ☐ No Is the new well used for the same purposes (there is no increase in the use) as the old well?
☑ Yes ☐ No Was the old well properly abandoned? The proper abandonment procedures can be found in the Board of Water Well Contractor rules, ARM 36.21.670.

If the answer to all of the above questions is "yes", you can file this form. Complete the information below.

1. **WATER RIGHT OWNER(S)** MELVIN G. AND LERAH L. PARKER
   Mailing Address 5000 HWY 37
   City LIBBY State MT Zip 59923
   Work Phone _____ Home Phone 406-293-9705 Cell Phone _____

2. **WATER RIGHT NUMBER (for the old well being replaced)** _____

3. **WELL DEPTHS & STATIC WATER LEVEL**
   Old well depth: 76 feet New well depth: 68 feet BELOW GROUND SURF.
   Old well static level: NA feet New well static level: 24 feet BELOW GROUND

4. **NEW WELL LOCATION**
   The new well is located approximately 60 feet NORTH (direction) from the old well.
   ___ 1/4 NW 1/4 NE 1/4 Section 32 Twp 31 N / ~~S~~ Rge 30 E / ~~W~~ County LINCOLN
   Lot _____ Block _____ Tract No. _____ Subdivision Name _____
   Government Lot No. _____ COS No. _____
   Street or Road Address, including City, State & Zip Code of the Well _____

5. **AFFIDAVIT**
   I affirm that statements appearing here are to the best of my knowledge true and correct. I also affirm I have possessory interest or the written consent of the person with the possessory interest in the property where the water is to be put to beneficial use.

   Appropriator's Signature _____ Date _____

   _____ Date _____

INSTRUCTIONS
REPLACEMENT WELL NOTICE (FORM 634)
For municipal wells that do not exceed 450 gpm or for all other wells that do not exceed 35 gpm and 10 ac-ft per year.

If your new well is located within the boundaries of a controlled groundwater area that restricts this type of change, the regional office will contact you to explain the filing requirements.

Questions: Your well can be considered a replacement well and you can file this form if:

- The old and new wells must be drawing water from the same groundwater aquifer.
- The flow rate used from the new well cannot exceed the maximum flow rate used from the old well.
- The new well must be used for the same purpose. For example, if the old well was used for one house and 100 cows, the new well must be used for those same amounts. If the new use is more than the old use, contact the Water Resources Regional Office to determine the correct filing requirements.
- The old well must have been properly abandoned. If a licensed well driller was used, the correct procedures will have been followed. If you plan to do the work, you must follow the abandonment guidelines found in the Administrative Rules of Montana at 36.21.670. These rules are available at the DNRC Website: http://www.dnrc.state.mt.us/wrd/home.htm (link: water resources, board of water well contractors).

Complete Items 1 through 5 ONLY if you have determined this is the correct form to file.

1. **Water Right Owner:** Enter the complete name, mailing address, and phone numbers of the owner of the existing water right. If you own the existing water right, but it is not in your name, contact the Water Resources Regional Office for information on completing an Ownership Update Form.

2. **Water Right Number:** Enter the water right number of the old well that was replaced.
You must attach a copy of the filed water right.

If your well does not have a DNRC water right number, please read the following information:
Water rights for stock and domestic uses from groundwater sources (well or developed springs) were exempt from the general adjudication filing requirements for claims of existing water rights if they met either of the following criteria:

A. The water was put to use prior to January 1, 1962, or
B. The water was put to use between January 1, 1962 and July 1, 1973, and a notice was filed in the courthouse records.

If your old well meets one of the above criteria, complete this form **and** a Notice of Water Right form number 627. The 627 form can be obtained from the DNRC Website. http://www.dnrc.state.mt.us/wrd/home.htm
If your well does not meet these criteria, call the regional office serving your area.

3. **Well Depths:** Enter the well depths and static water levels for both the old and new wells.
You must attach a copy of the new well log and a copy of the old well log, if available.

4. **Well Location:** This is the actual location of the replacement (new) well.
You must attach a map showing the old and new well locations.

- Enter the approximate distance and the direction that the new well is located from the old well.
- Enter the land description for the location of the development. Describe the location to the nearest 10 acres if possible. Legal land descriptions may be obtained from the well log; the county records; or from the Montana Cadastral system at: http://gis.doa.state.mt.us/cadastral/maps.html
  Subdivisions – In addition to the above description, enter the lot and block or tract number, subdivision name.
  Government Lots – In addition to the land description, enter the government lot number.
  Certificate of Survey - In addition to the land description, enter the survey number.
  Street or Road Address – Enter the physical address of the development including city, state, and zip code.

FOR ANY OTHER QUESTIONS OR FORMS, CONTACT THE REGIONAL OFFICE RESPONSIBLE FOR YOUR COUNTY.

BILLINGS: AIRPORT INDUSTRIAL PARK, 1371 RIMTOP DR., BILLINGS MT 59105-1978
PHONE: 406-247-4415 FAX: 406-247-4416
SERVING: Big Horn, Carbon, Carter, Custer, Fallon, Powder River, Prairie, Rosebud, Stillwater, Sweet Grass, Treasure, and Yellowstone Counties

BOZEMAN: 2273 BOOT HILL COURT, SUITE 110, BOZEMAN MT 59715
PHONE: 406-586-3136 FAX: 406-587-9726
SERVING: Gallatin, Madison, and Park Counties

GLASGOW: 222 6TH STREET SOUTH, PO BOX 1269, GLASGOW MT 59230-1269
PHONE: 406-228-2561 FAX: 406-228-8706
SERVING: Daniels, Dawson, Garfield, McCone, Phillips, Richland, Roosevelt, Sheridan, Valley, and Wibaux Counties

HAVRE: 210 6TH AVENUE, PO BOX 1828, HAVRE MT 59501-1828
PHONE: 406-265-5516 FAX: 406-265-2225
SERVING: Blaine, Chouteau, Glacier, Hill, Liberty, Pondera, Teton, and Toole Counties

HELENA: 1424 9th AVENUE, PO BOX 201601, HELENA MT 59620-1601
PHONE: 406-444-6999 FAX: 406-444-9317
SERVING: Beaverhead, Broadwater, Deer Lodge, Jefferson, Lewis and Clark, Powell, and Silver Bow Counties

KALISPELL: 109 COOPERATIVE WAY, SUITE 110, KALISPELL MT 59901-2387
PHONE: 406-752-2288 FAX: 406-752-2843
SERVING: Flathead, Lake, Lincoln, and Sanders Counties

LEWISTOWN: 613 NORTHEAST MAIN ST., SUITE E, LEWISTOWN MT 59457-2020
PHONE: 406-538-7459 FAX: 406-538-7089
SERVING: Cascade, Fergus, Golden Valley, Judith Basin, Meagher, Musselshell, Petroleum, and Wheatland Counties

MISSOULA: TOWN AND COUNTRY SHOPPING CENTER, 1610 S 3RD ST WEST, SUITE 103, PO BOX 5004, MISSOULA MT 59806-5004
PHONE: 406-721-4284 FAX: 406-542-1496

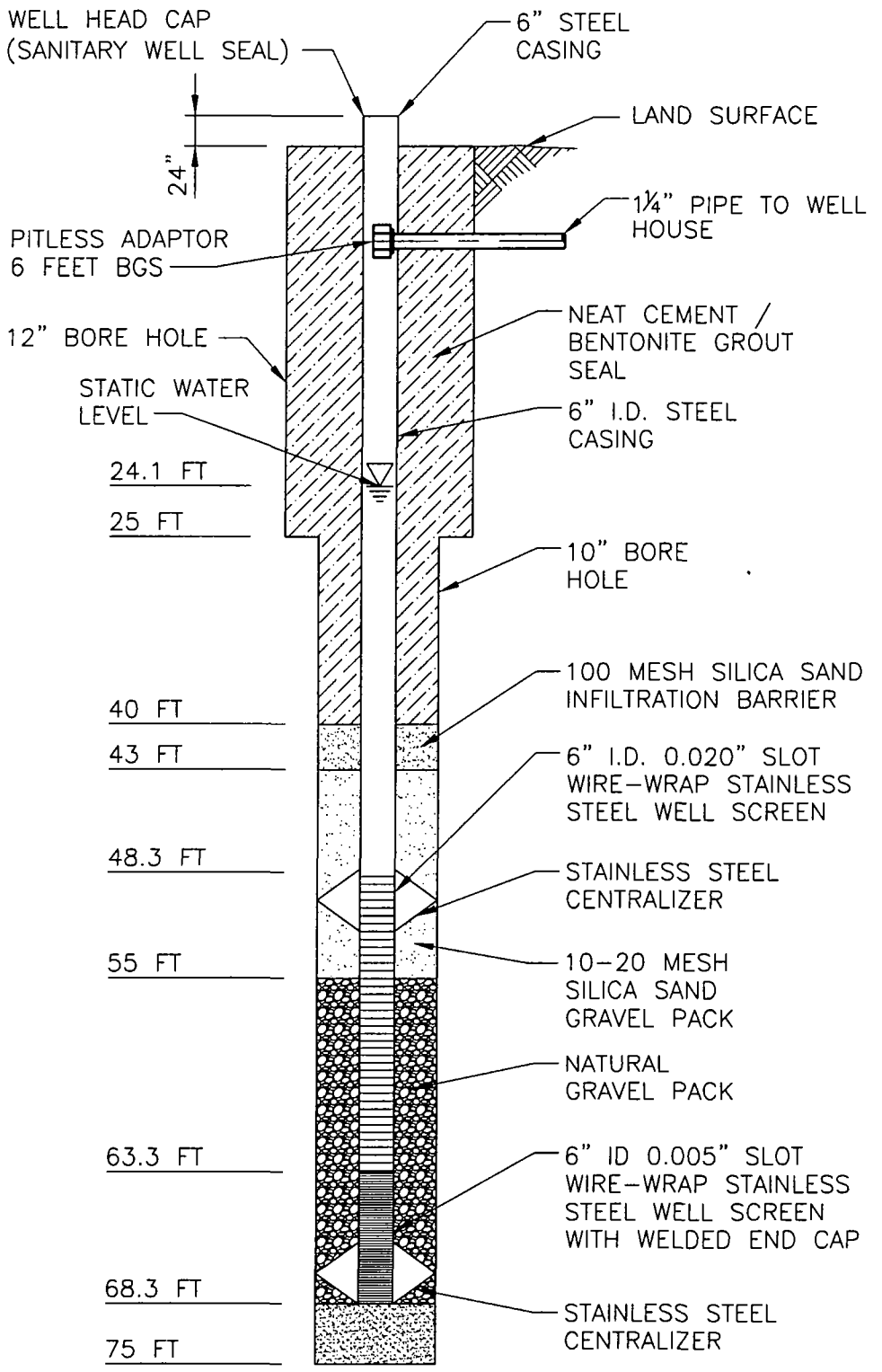

WELL SCHEMATIC

NOT TO SCALE

S:\4000\46194\ FIG WELL 1 05/26/06 15:10 simpsonkc

Figure 1
As-Built Schematic of Well

CDM

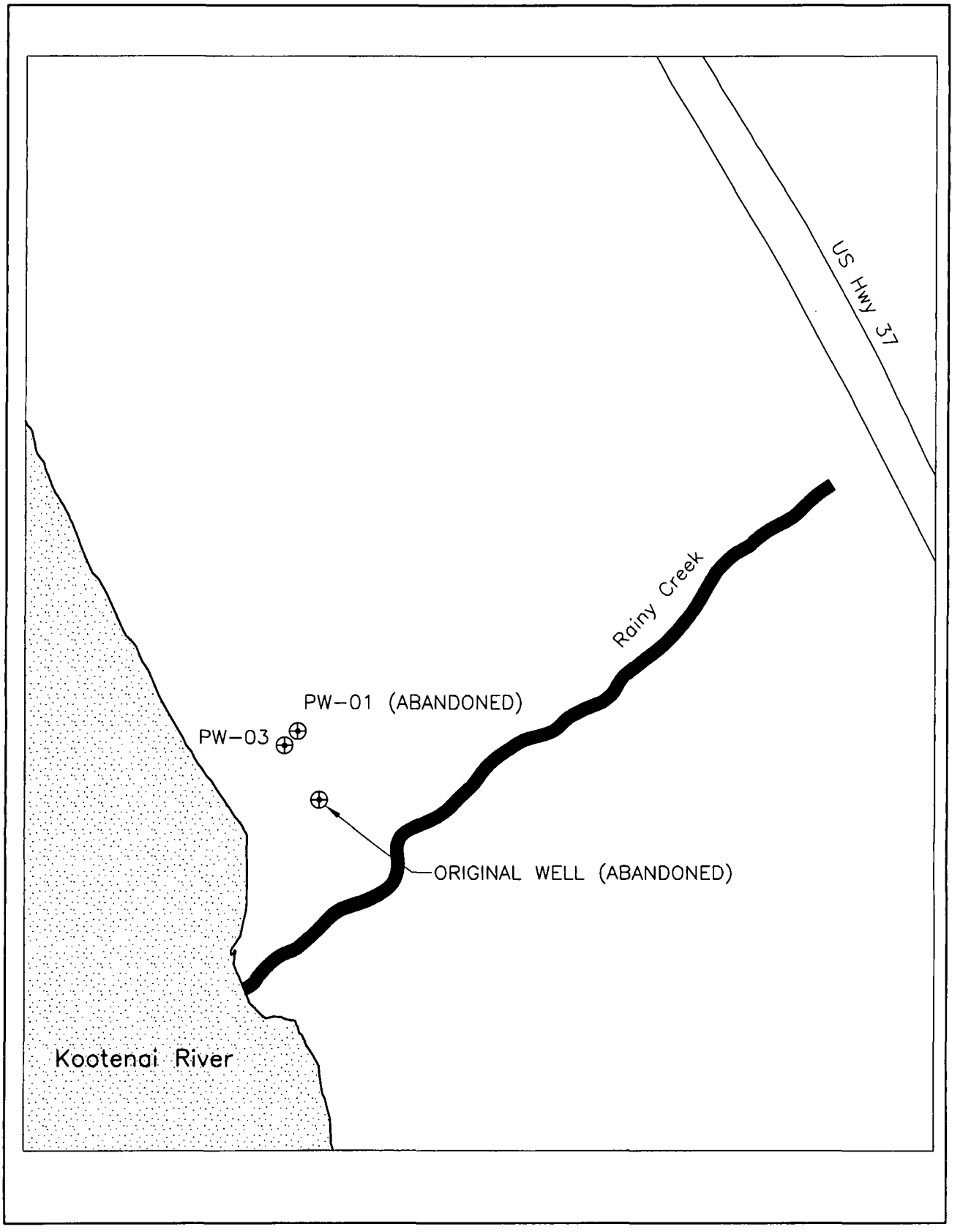

S:\4000\46194\ FIG X 06/02/06 09:57 simpsonkc

Figure X
Location of Wells at Parker Property

CDM

MONTANA WELL LOG REPORT

Form No. 603 R2-99 Well ID#06-38

This log reports the activities of a licensed Montana well driller and serves as the official record of work done within the borehole and casing and describes the amount of water encountered. **This form is to be completed by the driller and filed with DNRC within 60 days of completion of the work. Acquiring Water Rights is the well owner's responsibility and is not accomplished by the filing of this report.** Well log information is stored in the Groundwater Information Center at the Montana Bureau of Mines and Geology (Butte) and water right information is stored in the Water Rights Bureau records (Helena). For fields that are not applicable, enter NA. ***Optional fields are in italics.*** Record additional information in the REMARKS section.

1. WELL OWNER:
Name Melvin G. Parker
Mailing address 5000 Hwy 37
Libby, MT 59923

2. WELL LOCATION: List ¼ from smallest to largest
___ ¼ ___ ¼ NW ¼ NE ¼, Section 32
Township 31 N Range 30 W County Lincoln
Lot ___ *Tract/Blk* ___ *Subdivision Name* ___
Well Address 5000 Hwy 37, Libby MT 59923
GPS ☐*Yes* ☐ *No*
Latitude ___ *Longitude* ___
Error as reported by GPS locator (± feet)
Horizontal datum ☐ *NAD27* ☐ *WGS84*

3. PROPOSED USE: X Domestic ☐ Stock ☐ Irrigation
☐ Public water supply ☐ Monitoring Well ☐Other: ___

4. TYPE OF WORK:
X New well ☐ Deepen existing well ☐ Abandon existing well
Method: ☐ Cable ☐ Rotary X Other: Barber Rig; air rotary

5. WELL CONSTRUCTION DETAILS:
Borehole:
Dia. 12 in. from 0 ft. to 25 ft.
Dia. 10 in. from 25 ft. to 75 ft.
Dia. ___ in. from ___ ft. to ___ ft.
Casing:
Steel: Wall thickness ☐ Threaded x Welded
Dia. 6 in. from +2 ft. to 48 ft.
Dia. ___ in. from ___ ft. to ___ ft.

Plastic: Pressure Rating ___ lbs. ☐ Threaded ☐ Welded
Dia. ___ in. from ___ ft. to ___ ft.

Perforations/Slotted Pipe:
Type of perforator used ___
Size of perforations/slots ___ in. by ___ in.
___ no. of perforations/slots from ___ ft. to ___ ft.
___ no. of perforations/slots from ___ ft. to ___ ft.
Screens: X Yes ☐ No
Material Johnson Stainless Steel 304
Dia. 6 Slot size .020 from 48 ft. to 63 ft.
Dia. 6 Slot size .005 from 63 ft. to 68 ft.
Gravel Packed: X Yes ☐ No
Size of gravel 10/20
Gravel placed from 43 ft. to 63 ft.
Packer: X Yes ☐ No
Type 10/20 Depth(s) 40' – 50'
Grout: Material used Cement/Bentonite Grout
Depth from 6 ft. to 40 ft. OR ☐ Continuous feed

6. WELL TEST DATA:
A well test is required for all wells. *(See details on well log report cover.)*
X Static water level 26 ft. below top of casing or
☐Closed-in artesian pressure ___ psi.
How was test flow measured:
bucket/stopwatch, weir, flume, flowmeter, etc Flowmeter
Yellowstone groundwater closure area only - Water Temperature ___ °F
☐AQUIFER TEST DATA FORM ATTACHED
Test - 1 hour minimum
Drawdown is the amount water level is lowered below static level.

All depth measurements shall be from the top of the well casing.
Time of recovery is hours/minutes since pumping stopped.
Air test*
___ gpm with drill stem set at ___ ft. for ___ hours
Time of recovery ___ hr. Recovery water level ___ ft.
OR Bailer test*
___ gpm with ___ ft. of drawdown after ___ hours
Time of recovery ___ hr. Recovery water level ___ ft.

OR Pump test*
Depth pump set for test 45 ft.
29 gpm pump rate with 11.8 ft. of drawdown after 12 hrs pumping
Time of recovery 1 hour hrs/min. Recovery water level 26 ft.

OR Flowing Artesian*
___ gpm for ___ hours
Flow controlled by ___
**During the well test the discharge rate shall be as uniform as possible. This rate may or may not be the sustainable yield of the well. Sustainable yield does not include the reservoir of the well casing.*

7. WELL LOG:

Depth, Feet From	Depth, Feet To	Material: Color/rock and type/descriptor (example: blue/shale/hard, or brown gravel/water, or brown/sand/heaving)
0	14	Fill (clay & sands)
14	67	Gravels & Sand
67	75	Heaving Fine Sands

☐ADDITIONAL SHEETS ATTACHED

8. DATE WELL COMPLETED: 5/1/06

9. REMARKS: ___

10. DRILLER/CONTRACTOR'S CERTIFICATION:
All work performed and reported in this well log is in compliance with the Montana well construction standards. This report is true to the best of my knowledge.
Name, firm, or corporation (print) O'Keefe Drilling Co., Inc.
Address P.O. Box 3810, Butte, MT 59702
Driller Larry Gagnon Signature Larry Gagnon
Date 6/13/06 License no. WWD126

MBMG ID # ___

Appendix E

Field Notes

Doc. Control # 100592 ~~10092~~ ON 5/1/06

LIBBY MT.
PARKER WELL REPLACEMENT

"Rite in the Rain"®
ALL-WEATHER
Environmental
FIELD BOOK
No. 550 F

ANDY HORN

START 4/28/06

END

No. 550F Enviro-Fab Cover

"Rite in the Rain"®
ALL-WEATHER WRITING PAPER

ALL-WEATHER
ENVIRONMENTAL FIELD BOOK

Name Amon Horn
CDM
Address 1331 17th St, Suite 1200
Denver CO 80202
Phone 1-888-298-7635

Project Libby - Parker Well
Replacement.
2616.008.204.OPUN2

This book is printed on "Rite in the Rain" All-Weather Writing Paper - A unique paper created to shed water and enhance the written image. It is widely used throughout the world for recording critical field data in all kinds of weather. For best results, use a pencil or an all-weather pen.

Specifications for this book

Page Pattern		Cover Options	
Left Page	Right Page	Polydura Cover	Fabrikoid Cover
Columnar	1/4" Grid	Item No. 550	Item No. 550F

© 1996 J. L. DARLING CORP.

CONTENTS

PAGE	REFERENCE	DATE

Reference Page Index

147 Error codes, Hazardous classifications, Container types
148 Sampling guidelines (Liquids)
149 Sampling guidelines (Solids)
150 Approximate Volume of Water in Casing or Hole, Ground Water Monitoring Well
151 PVC Pipe casing tables
152 Soil Classification
153 Soil Classification
154 Conversions (Length, Weight, Volume, Temp, etc...)
155 Conversions (Concentrations, Volume/Flow or Time, Velocity, Acceleration)
156 Maximum Concentration of Contaminants for the Toxicity Characteristic

Location Libby - Parker Prop Date 4/28 - 5/5/06

Project / Client 5000 Hwy 37

RESERVED FOR TABLE OF CONTENTS (TOC)

PAGE	ACTIVITY	DATE
5	WELL SITE PRE-DRILLING VISIT	4/28/06
7	WELL DRILLING	4/29/06
18	WELL INSTALLATION	4/30/06
~~27~~	~~WELL DEVELOPMENT~~ CMT 5/1/06	~~5/1/06~~
27	SITE CLEANUP	5/1/06
33	WELL DEVELOPMENT	5/2/06
46	" "	5/3/06
63	WELL STEP DRAWDOWN TESTING, BEGIN CONST. RATE TEST	5/4/06
77	FINISH 12-HR CONST. RATE TEST, DRINKING WATER SAMPLING	5/5/06

Aaron Horn 5/5/06

Location _____ Date _____

Project / Client _____

RESERVED FOR TOC

PAGE	ACTIVITY	DATE

Location _____ Date _____

Project / Client _____

RESERVED FOR TOC

PAGE	ACTIVITY	DATE

Location LIBBY - PARKER PROP. Date 4/28/06

Project / Client 5000 HWY 37 N.

[signature] ANDY HORN

1320 LEAVE CDM LIBBY OFFICE FOR PARKER PROPERTY (SITE) PURPOSE OF WORK - REPLACE WELL DAMAGED DURING RESTORATION OF SCREENING PLANT PROPERTY. TODAY'S VISIT IS FOR SITE WALK-OVER PRIOR TO STARTING DRILLING ON 4/29/06.

1330 ARRIVE AT SITE. MEET W/ ~~1410~~ [initials] 4/28/06 T. COOK, [initials] 4/28/06 PAUL LAMMERS, DISCUSS SITE ISSUES, WELL LOCATION. WELL WILL BE ~10 W. OF EXISTING WELL HOUSE.

1420 LEAVE SITE

1430 RTN. LIBBY FIELD OFFICE

1635 T. CROWELL REPORTS THAT J. MONTERA HAS APPROVED MONITORING OF CONDUCTANCE AS A SURROGATE FOR FL. THIS WAS SUGGESTED BY M. SMITH.

[signature]

ANDY HORN.

Location LIBBY - PARKER PROP Date 4/28/06

Project / Client

Andy Horn

PHOTO LOG

TIME	SUBJECT	VIEW DIR.
1415	PROPOSED WELL LOCATION	N
1415	PROP. WELL LOC, T. COOK ON WELL LOCATION	NE
1416	PROP. WELL LOC., T. COOK AT LOC.,	SOUTH

NOTE: WEATHER CLEAR, N. WIND 5-10 MPH ~~[illegible]~~ 4/28/06 ~70°F

Andy Horn

Location LIBBY - PARKER PROPERTY Date 4/29/06

Project / Client 5000 HWY 37 N.

Andy Horn

0655 ARRIVE AT SITE. GATE OPEN, P. LAMMERS ON SITE (CDM)
BILL NEVES (MCS)
JIM SABO (CDM)
P. LAMMERS (CDM)
LARRY GAGNON (O'KEEFE)
~~[illegible]~~ LARRY McHUGH (O'KEEFE)
RON KNUTSON (MCS)
TOMMY COOK (CDM)
BOB TROUTMAN (MCS)

0710 HOLD SITE SAFETY MEETING w/ ALL PRESENT. TOPICS: GEN DRILL RIG SAFETY, ROUTE TO HOSPITAL

0711 TOM VANDERVEER, CDM ONSITE

0735 SETTING UP

0740 B. TROUTMAN OFFSITE FOR SUPPLIES.

0750 ABOVE NOTES AUTHORED BY ANDY HORN

0750 THOMAS E. COOK TAKES CONTROL OF THIS LOGBOOK TEC

Location LIBBY - PARKER PROPERTY Date 4/29/06

Project / Client

[signature] ANDY HORN

0751 A. HORN LEAVES SITE TO PICK UP SUPPLIES IN TOWN. [initials]

0752 - B. NEVES STAGES CUTTINGS TRAILER, INADVERTENTLY DAMAGES ONE SPRINKLER HEAD NW OF PUMPHOUSE. [initials]

0755 - DRILL RIG IS STAGED NW OF PUMPHOUSE

0759 - LEROY LOCKMAN W/ LOCKMAN EQUIPMENT ARRIVES WITH TENDER.

0810 A. HORN ARRIVES BACK ONSITE. T. COOK RELINQUISHES LOGBOOK TO A. HORN.

[signature] →

0820 SETTING UP DRILL RIG
WEATHER: HIGH CLOUDS, MOSTLY SUNNY, ~50°F, E. WIND ~0-2 MPH

0830 LEROY LOCKMAN OFFSITE

0925 MIKE CIRIAN, USEPA ONSITE

[signature]
ANDY HORN 4/29/06

Location LIBBY - PARKER PROPERTY Date 4/29/06

Project / Client

[signature] ANDY HORN

PHOTO LOG

TIME	SUBJECT	VIEW DIR
0846	RIG SETUP	NE
0936	DRILLING DRIVE SHOE FOR DUAL ROTARY, 12"	NA
0938	DRIVE SHOES FOR 10" AND 12"	NA
0945	T. VANDERWEEL, J. SABO OFFSITE	
0955	REVIEW RIG EQUIPMENT SAFETY	
1005	R. KNUTSON OFFSITE FOR SORBANT	
1025	CONDUCT TAILGATE SAFETY MEETING, TEST EMERGENCY SHUT DOWN SWITCH	
1035	M. CIRIAN OFFSITE	
1036	R. KNUTSON ONSITE W/ OIL DRI (TM)	
1040	NOTE: PRIMARY (LEVEL C) SET UP IN IMMEDIATE WORK AREA, LEVEL D AREA SURROUNDING. BOOT WASH SET UP AT ENTRY POINT	
~~1042~~	~~P.~~ [initials] 4/28/06	
1045	LEVEL C CREW DONS PPE	

Location LIBBY - PARKER PROP. Date 4/29/06

Project / Client

[signature]

LEVEL C CREW CONSISTS OF L. GAGNON + L. McHUGH (O'KEEFE) AND R. TRONTMAN (MCS)

1048 BEGIN DRILLING. ADDING WATER TO BOREHOL TO CONTROL DUST

1051 PLASTIC IN BOTTOM OF TRAILER RIPS, SHUT DOWN.

1052 P. LAMMERS OFFSITE

1100 RESUME DRILLING

1105 T. COOK OFFSITE

1115 ADDING PIPE TO SURFACE CASING

1135 BRENDA MILLER, NW PIPE FITTINGS ONSITE W/ DRILLER'S SUPPLIES

1138 CHECK COND. METER CALIBRATION

~~SP. CONDUCTANCE = 630 µS w/ 1413 µS STANDARD~~ CH 4/29/06

~~CONDUCTIVITY = 544 µS w/ 1413 µS STD. AT 17.9°C~~ CH 4/29/06

SUBMERGE PROBE SUFFICIENTLY IN STANDARD. SPECIFIC CONDUCTANCE (SC) = 1330 µMHOS w/ 1413 µMHOS STANDARD.

1139 NOTE: RIG IS SHUT DOWN DUE TO

Location LIBBY ~~PARKER~~ PARKER PROPERTY CH 4/29/06 Date 4/29/06

Project / Client

[signature]

PHOTO LOG, CONTINUED

TIME	SUBJECT	VIEW DIR
1050	DRILLING AT ~10' BGS	NE
1410	DRILLING SETUP	N
1417	" "	N
1434	WELDING PIPE	N
1450	B. TRONTMAN CATCHING CHIPS	E

CH 4/28/06

PHOTO LOG 4/30/06

0758	STAINLESS STEEL SCREEN	NA
0805	" " "	NA
0746	TRIPPING RODS INTO HOLE	N
0819	LOWERING SCREEN INTO WELL	N
0819	" " " "	N
0823	SCREEN SUSPENDED IN WELL	NA
0826	WELDING SCREEN TO BLANK CASING	NA
0836	CH 4/30/06 WELDING, CLOSE-UP OF WELD	
0841	CENTRALIZER AT TOP OF SCREEN	NA
0847	SAFETY TAB ON CASING	NA
0850	BLANK CASING (ASTM A-53)	NA
0851	FILTER PACK (OGLEBAY-NORTON 10-20)	NA

CONTINUED ON B 2.1

Location LIBBY-PARKER PROPERTY Date 4/29/06

Project / Client

Andy Horn

DRILLING LOG (SUMMARY)

NOTE: R. TROUTMAN, MCS IS RECORDING DETAILED BORING LOG

0-14 - FILL

14-25 GRAVEL, w/ LITTLE OR NO SAND, BOULDER AT ~23' MOSTLY METAMORPHIC, GRAVEL COMING TO SURFACE PULVERIZED, APPEARS TO HAVE BEEN ~2" GRAVEL. LITTLE SAND APPARENT

~35' GRAVEL, w/ VERY COARSE SAND, GRAVEL AS ABOVE AH 4/30/06

45' GRAVEL, AS ABOVE, WELL ROUNDED 0.5"-1" GRAVEL OBSERVED, w/ SOME ~~EC~~ AH 4/30/06 VERY COARSE SAND

55' GRAVEL, AS ABOVE, DECREASING SAND

60' GRAVEL, AS ABOVE, TRACE TO NO SAND

67' SAND, VERY FINE TO MEDIUM, LITTLE TO NO GRAVEL, GRAY

75' SAND, VERY FINE TO MEDIUM, TRACE FINE GRAVEL, GRAY

Andy Horn 4/29/06

Location LIBBY PARKER PROPERTY Date 4/29/06

Project / Client

Andy Horn

~~CHANGING~~ ADDITION OF PIPE TO CASING. ALL CUTTINGS ARE CONTAINED. DOWNGRADE TO LEVEL D PPE FOR WELDING AND UNLOADING SUPPLIES FROM TRUCK. TROUTMAN EXITS PRIMARY EXC. ZONE AFTER REMOVAL OF PPE AND BOOT WASH.

1200 PULL TRAILER OUT OF EXCLUSION ZONE, WILL DROP TRAILER AND RECONFIGURE EXCLUSION ZONE. THIS DONE TO BE ABLE TO REACH BOREHOLE W/ WELDING/CUTTING LEADS.

1215 RECONFIGURE EXCLUSION ZONE, LEVEL C CREW DONS PPE, RESUMES DRILLING

1216 SC = 1333 ~ MHOS w/ 1413 ~ MHOS STD. THIS IS ACCEPTABLE, w/ IN 10%

~~1220 ENCOUNTER GROUND WATER AT ~27'~~ AH 4/29/06

~~~27'~~ AH 4/29/06

1220 MEL AND LEERAH PARKER
~~~

Location LIBBY - PARKER PROPERTY Date 4/29/08

Project / Client

	ONSITE, DISCUSS PROGRESS AND WELL CONSTRUCTION PLANNED
1255	PARKERS OFFSITE
1320	M. CIRIAN ONSITE.
1335	M. CIRIAN OFFSITE.
1340	DRILLERS WELDING CUTTING SHOE ONTO CASING
1430	WELDING CASING
1435	RESUME LEVEL C OPERATIONS
1445	CONTINUE DRILLING W/ 10" BORING
1455	SHUT DOWN, DRILLERS NEED TO CALCULATE AMT. CONCRETE NEEDED. PLAN TO SEND SOMEONE INTO LIBBY TO GET CEMENT TODAY
1500	TROUTMAN OFFSITE FOR SUPPLIES, (NOT CEMENT)
1502	CURRENTLY SHUT DOWN TO WELD PIPE
1516	B. MEEKS OFFSITE FOR CEMENT
1518	- MEASURE SC + pH OF RAINY CREEK + KOOTENAI RIVER TO COMPARE W/ GW
	RAINY CREK 458 uMhos/cm, pH = 8.55
	KOOTENAI RIVER 233 uMhos/cm pH = 8.21

Location LIBBY - PARKER PROP. Date 4/29/08

Project / Client

SPECIFIC COND. LOG

TIME	DEPTH	SC (uMhos/cm)
1510	KOOTENAI RIVER	233 uMhos/cm
1515	RAINY CREEK	458 uMhos/cm
1545	35' : 38'	274.5 uMhos/cm
	- pH = 8.43	4/29/08

TIME	DEPTH	SC	pH
1685	55'	308	8.16
1655	60'	261	8.37
1215	70'	168	8.29
1228	75	463	8.34

ANDY HORN 4/29/08

Location Libby-Parker Property Date 4/29/06

Project / Client

1525 Troutman onsite w/ strainers to catch cuttings with
1540 Level C crew in PPE, will try to "burp" water out of hole for formation water sample, resume drilling
1552 B. Neeves onsite w/ pallet of cement
1555 Advance to 55', joining pipe
1556 Offsite for supplies.
1620 Return to site. Still joining pipe
1630 Level C crew dons PPE, resumes drilling. W1
1631 Hose comes loose from attachment
1640 B. Neeves offsite
1645 Resume drilling, collect water sample from ~55' bgs
1655 Sample from 60' bgs.
1700 Sample from 70' bgs, too thick to measure, allowing water to come into hole
1725 Advance to 75', collecting sample
1735 Speak w/ Paul Lammers

Location Libby-Parker Property Date 4/29/06

Project / Client

update on progress.
1740 Tripping out of hole
~~1800 Pipe out~~ 4/29/06
1805 Boring open to 72' bgs, will resume setting well in morning
1815 Load gear, R. Knutson to secure site + document security
1820 Leave site.
Notes: All drilling work done in Level C PPE by Gagnon, McHugh + Troutman, all others in Level D PPE + outside primary exclusion zone
→ No downtime or delays
→ ~~Difficulty getting sand into completion causes concern~~ with 4/29 interval 4/29/06
→ w/ flowing sands, completion to ~~70~~ 4/29/06 75' bgs may cause difficulty.

Andy Hoo 4/29/06

Location LIBBY PARKER WELL Date ~~10/30~~ 4/30/06

Project / Client 5000 HWY 37 N.

Andy Horn

0700 ARRIVE AT SITE. SITE SECURE,
0705 HOLD SAFETY MEETING. TOPIC -GENERAL RIG SAFETY. PERSONNEL PRESENT:
R. KNUTSON, MCS
B TRUTMAN, MCS
L. GAGNON, O'KEEFE
L. McHUGH "
A. HORN, CDM
→ TODAY: INSTALL WELL MATERIALS WORK TODAY TO BE DONE IN LEVEL D (NO DRILLING TO OCCUR). TAKE DOWN INNER LEVEL C ZONE,
WELL OPEN TO 67' BGS, SAND HAS COME UP INTO BORING. WILL BLOW SAND OUT + TRY TO CONTROL HEAVING SAND W/ WATER
→ SEE P. 11 FOR PHOTO LOG
0745 TRIPPING INTO HOLE TO BLOW SAND OUT
0750 BLOW SAND OUT, INJECTING WATER TO BUILD UP HEAD
0755 WITHDRAWING BIT + DRILL STEM

Location LIBBY PARKER WELL Date 4/30/06

Project / Client

VERY SLOWLY
0815 BEGIN SETTING WELL
0835 RICK SPENCER, LOCKMAN GROUP. ONSITE, ASSISTING W/ WATER TRUCK
0840 SETTING CENTRALIZER AT TOP OF WELL SCREEN
0845 SPENCER OFF SITE
0900 ADDING 3RD SECTION OF 20' BLANK CASING ABOVE SCREEN
0901 WEATHER: CLOUDY, OCCASIONAL RAIN, ~45°-50° F, WIND S, 5-15 MPH.
0910 BOTTOM OF WELL IS DOWN TO 67' BGS, TOP OF HEAVING SAND. LEAVE SITE TO CALL M. SMITH
0920 SPEAK W/ M. SMITH, CDM, DISCUSS WELL DEPTH, AGREE TO COMPLETE WELL FROM 47' TO 67' BGS.
0930 RETURN TO SITE, PROCEED W/ SETTING WELL
1000 B. MEEKES, MCS, ONSITE
1005 ADDING SAND (10-20) TO 55' IN ANNULUS.

Location LIBBY-PARKER WELL Date 4/30/08

Project / Client

WELL CONST. LOG

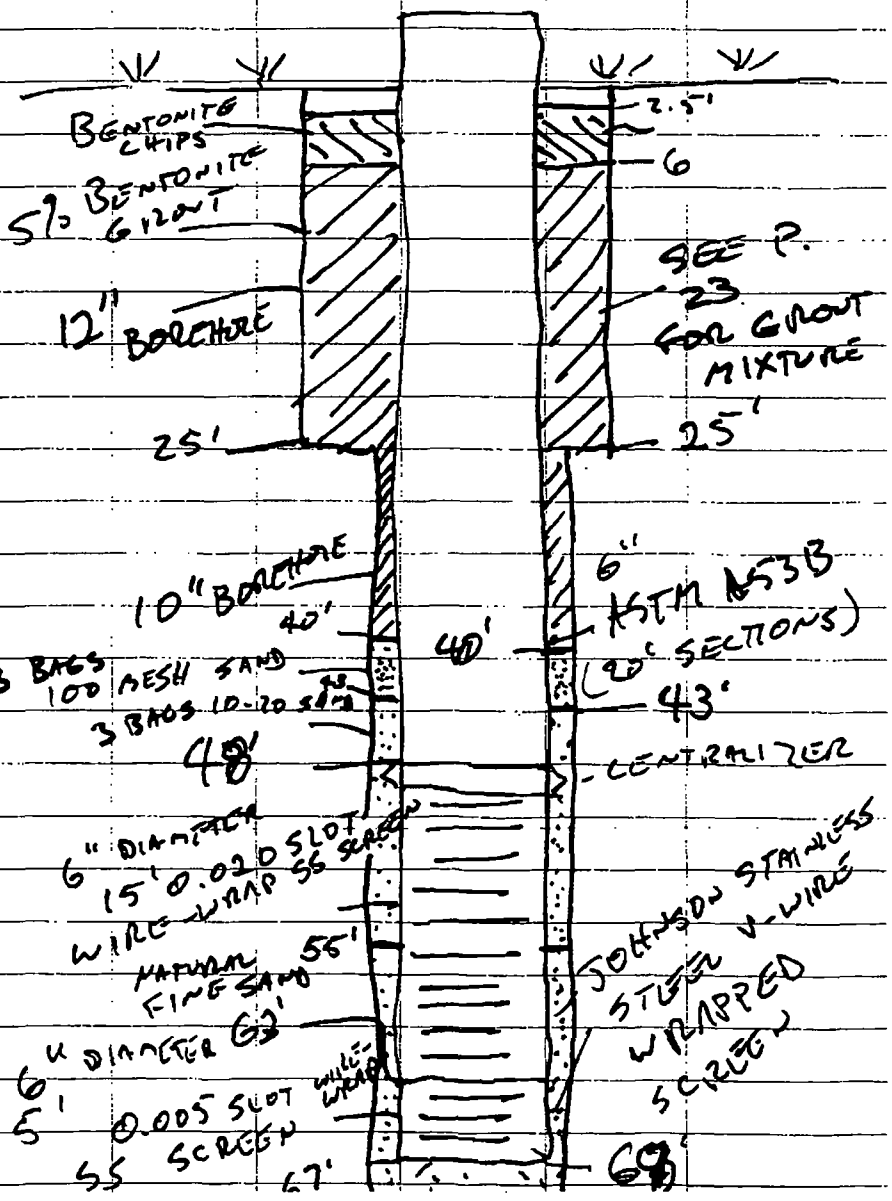

Location LIBBY-PARKER WELL Date 4/30/08

Project / Client

PHOTO LOG (CONT. FROM P. 11)

TIME	SUBJECT	VIEW DIR
0904	WELD IN CASING	NA
	~~BOTTOM OF WELL~~ 4/30/08	
1050	POSITIVE PRESSURE SETUP ON TRUCK GOING TO MINE RD LANDFILL	NA
1320	GROUT MIXER	NA
1555	TREMIE FOR GROUT	NA
1600	~~FINISH INSTALLING 2ND BATCH OF GROUT. 2ND BATCH MADE W/ 48 GAL WATER, 16 BAGS CEMENT, 40 LBS BENTONITE.~~	
1601	~~PULLING 12" SURFACE CASING FROM HOLE~~	
1601	REMOVAL OF 12" SURFACE CASING	S
1611	DRILL RIG N	N
1628	WELL CASING W/ LEVEL	NA
1655	SITE AT END OF DAY 2	S
1718	VIEW OF WELL SITE FROM GATE	N

4/30/08

ANDY HORN

Location LIBBY-PARKER PROP. Date 4/30/06

Project / Client

1025	ADD SAND TO 55', BEGIN PULLING DRIVE CASING.
1026	WEATHER: STEADY RAIN, ~45°-50°F SLIGHT N. WIND 0-5 MPH.
1045	WORKING ON GETTING TRAILER W/ CUTTINGS OUT. DRILLERS PULLING 10' DRIVE CASING. + ADDING 10-20 SAND.
1055	B. MEEKES OFFSITE W/ DRILL CUTTINGS, R. KNUTSON W/ MEEKES GOING TO LANDFILL
1056	SAND ADDED TO 45' BGS.
1110	PULLING DRIVE CASING, SAND NOW UP TO ~40' BGS.
1114	ADDING WATER TO KEEP SAND DOWN. REFER DRILLER TO SPECIFICATION
1115	MEEKES + KNUTSON BACK ON SITE
1116	RAIN TURNING TO SNOW
1130	WASH SAND TO 43' BGS.
1135	ADDING 100 MESH INFILTRATION BARRIER
1138	WEATHER: DRIZZLE, ~40°F
1140	MEEKES + KNUTSON OFFSITE
1145	INFILTRATION BARRIER TO 41

Location LIBBY-PARKER WELL Date 4/30/06

Project / Client

	ADDING ANOTHER BAG
1200	TOP OF INFILTRATION BARRIER AT 40' BGS
1215	CUT DRIVE CASING, WILL TAKE LUNCH BEFORE GROUTING
1235	R. KNUTSON ONSITE.
1240	MOVING TRAILER/TRUCK, SETTING UP TO GROUT
1250	LEAVE SITE DURING SETUP FOR SUPPLIES
1310	RETURN TO SITE. DRILLERS STILL SETTING UP TO MIX GROUT
1325	GROUT MIXER STARTED. R.E. RUPE CO. MODEL ~~320~~ 130+20/300
1330	RAIN LETTING UP TO VERY LIGHT DRIZZLE, TRUTMAN OFFSITE
1340	MIXING GROUT
1400	DTGW = 28.7 - 4.0' = 24.7
1415	BEGIN GROUTING. GROUT MIXED W/ 4 47LB BAGS CEMENT + 35 LBS POWDERED BENTONITE, 40 GAL WATER
1425	GROUT INSTALLED TO ABOVE 25' BGS

Location LOBBY-PARKER PROP Date 4/30/08

Project / Client

WILL PULL 10" DRIVE CASING

1430 CUTTING DRIVE CASING OFF

1435 TOMMY COOK, CDM ONSITE

1440 MEL + LESLIAN PARKER ONSITE DISCUSS PROGRESS, DESCRIBE PLAN FOR WELL DEVELOPMENT AND FLUSHING POTENTIAL ASBESTOS FROM WELL.

1500 DISCUSS POSSIBILITY OF LEAVING SCRAP SECTIONS OF 10" DRIVE CASING W/ MR. PARKER. MR. PARKER STATES THAT HE WOULD LIKE TO HAVE LEFT OVER PIPE IF IT IS AVAILABLE. THIS WILL BE EVALUATED W/ DRILLER + ALSO W/ M. CIRIAN, USEPA.

1515 P. LAMMERS UPDATED, AGREES THAT M. CIRIAN SHOULD BE CONSULTED. PARKERS OFFSITE

1520 MIXING NEXT BATCH OF GROUT AS ABOVE. NOTE: ALL GROUT BEING TREMIED INTO ANNULUS.

1530 NOTE: ALL 10" DRIVE CASING IS OUT OF GROUND. T. COOK OFFSITE

Location L1334-PARKER PROP. Date 4/30/08

Project / Client

1555 TREMIE GROUT INTO 12" CASING

1600 FINISH INSTALLING 2ND BATCH OF GROUT. GROUT MADE W/ 48 GAL WATER, 16 47 lb BAGS CEMENT, AND 40 lbs BENTONITE

1601 PULL 12" TEMPORARY SURFACE CASING UP TO ABOUT 8' BGS

1615 PULL 12" SURF. CSG. OUT OF HOLE.

1620 GROUT IS 6' BGS. WILL ADD GRANULAR BENTONITE TO COMPLETE SEAL AND FACILITATE LATER INSTALLATION OF PITLESS ADAPTER.

1625 ADD BAG OF GRANULAR BENTONITE TO HOLE, BENTONITE TO 5.5' BGS. USED FINE BENTONITE FOR FIRST PART, ADD 2 BAGS 3/8" CHIPS, THEN 2 MORE BAGS "CRUMBLES" TO 2.5' BGS

1650 POLICE SITE, TIDY UP, McHUGH, GAGNON, KNUTSON OFFSITE

1700 SECURE SITE.

Location LIBBY-PARKER PROPERTY Date 4/30/06

Project / Client

Andy Horn

1701 ~~1900~~ 04/30/06 R. SPENCER, LOCKMAN EQUIP. ONSITE TO PICK UP WATER TRUCK. UNLOCK GATE + ALLOW IN.

1725 R. SPENCER HAVING MECHANICAL PROBLEMS W/ TRUCK

1745 SPENCER LEAVING TRUCK AT SITE, WILL REPAIR TOMORROW. TAKE SPENCER TO GATE, LOCK GATE, LEAVE SITE.

→ NOTES: ALL WORK DONE IN LEVEL D PPE. NO DRILLING WORK DONE NO DOWNTIME OR DERMS.

→ HAD DIFFICULTY GETTING SAND INTO COMPLETION INTERVAL

End

Andy Horn 4/30/06

Location LIBBY - PARKER PROPERTY Date 5/1/06

Project / Client 5000 Hwy 37 N.

Andy Horn ANDY HORN

0700 ARRIVE AT SITE. DRILLERS, KNUTSON ON SITE, OPEN GATE (LOCKED) + LET IN

0710 HOLD SAFETY MEETING. TOPIC: GENERAL SAFETY W/ HEAVY EQUIPMENT. PERSONNEL PRESENT:
L. GAGNON O'KEEFE
L. McHUGH O'KEEFE
R. KNUTSON, MLS
A. HORN, CDM

0715 TODAY WILL PUT WELL CASING TO 2' ABOVE GROUND SURFACE, LOAD SCRAP + LEFT OVER MATERIALS, CLEAN UP

0730 SPEAK W/ P. LAMMERS. HE'LL ARRANGE FOR C.R. TO PROVIDE DECON OF RIGS + TRUCKS AT MINE, CHECK W/ M. CIRIAN ABOUT DONATION OF PIPE TO M. PARKER

0740 DTGW = 24.2 BGS

0745 TD = 61.5' BGS, SOFT BOTTOM

0755 DISCUSS DEVELOPMENT PLAN W/ DRILLER, HE'S CONTACTING

Location L1334- PARKER WELL Date 5/1/06

Project / Client

SHOP TO MAKE SURE SAND BAILER IS BROUGHT TO SITE

0825 LOADING PIPE, CLEANING UP SITE.

0830 SPEAK W/ P. LAMMERS, NO PIPE TO BE LEFT ONSITE, EQ PERSONNEL AT AMPHITHEATER (DECON AREA).

0835 INSPECTION INDICATES ONE OF THE NYLON CABLE SLINGS IS WORN, NO LONGER SERVICEABLE, SLING IS DISCARDED.

0855 LEROY LOCKMAN, LOCKMAN EQ. ONSITE TO PICK UP WATER TRUCK W/ JULIA LOCKMAN

0925 LOCKMAN REPORTS HE NEEDS HIS MECHANIC TO REPAIR TRUCK

0930 J. + L. LOCKMAN OFFSITE.

0935 SPEAK TO P. LAMMERS, INSTRUCTED TO WAIT FOR S. OLIVERA BEFORE PROCEEDING TO DECON AREA

0940 DRILL RIG PULLS FORWARD, GETS STUCK

0945 S. OLIVERA ON SITE

Location L1334- PARKER PROP. Date 5/1/06

Project / Client

SEE P.32 FOR SAMPLE FORMS

1000 P. LAMMERS ONSITE

1010 WILL SAMPLE MATERIAL ON RIG + PIPE TO DETERMINE ASBESTOS CONTENT + WHETHER DECON IS NEEDED. S. OLIVERA SAMPLES MUD.

1011 MCS HAS EXCAVATOR COMING TO PULL RIG OUT.

1015 L. LOCKMAN, DEREK BREKER, LOCKMAN EQ. ONSITE

1035 JOE SCHWARTZENGREGER, S. END DIESEL, ONSITE W/ TOW TRUCK, HAS ASSISTANT.

1040 LOCKMAN + BREKER OFFSITE

1041 S. END DIESEL ASST. IS STAN POTTER

1045 TOW TRUCK SETTING UP TO PULL RIG OUT.

1046 NOTE! ALL ACTIVITIES BEING PERFORMED TO MINIMIZE POTENTIAL DAMAGE TO PROPERTY 5/1/06

1049 TOW TRUCK PULLS RIG CLEAR OF SOFT SOIL

1055 WORKING RIG OUT, SOFT SOIL PRESENTS CHALLANGE

Location LIBBY - PARKER PROP. Date 5/1/06

Project / Client

PHOTO LOG

TIME	#	SUBJECT	VIEW DIR
1026	1	STUCK DRILL RIG, REAR	S
1027	2	" " " FRONT	N
1028	3	PREVIOUSLY EXISTING RUTS 100' IN FRONT OF DRILL RIG	S
1032	4	PREVIOUSLY EXISTING RUTS MADE BY TRACTOR W/ 5' WHEEL SPAN, OUTSIDE TO OUTSIDE	E
1103	5	RUT FROM FRONT R. TIRE	N
1104	6	RUTS FROM STUCK RIG	N
1104	7	" " " "	S
1104	8	" " " " W/PLYWOOD USED TO MINIMIZE DAMAGE	W
1104	9	RUTS FROM RIG AS IT WAS CLEARING GAZEBO	N
1105	10	RUTS	W
1105	11	PLYWOOD USED TO MINIMIZE DAMAGE	W
1123	12	~~PLACEM~~ 5/1/06 RESTORED AREA BY GAZEBO	N

Andy Horn 5/1/06

Location LIBBY - PARKER PROP. Date 5/1/06

Project / Client

1110 TOW TRUCK OFFSITE
1130 RUTS IN GRAVEL AREA FILLED + RAKED OVER
1145 M. CIRIAN ONSITE.
1215 S. OLIVERIA CALLS, SAMPLE RESULTS FROM MUD PRODUCED DURING DRILLING ARE NON-DETECT.
1235 M. CIRIAN OFFSITE.
1236 NOTE: CAUTION TAPE SET UP AROUND AREA W/ RUTS
1240 ALL SITE PERSONNEL EXIT SITE FOR LANDFILL, SITE SECURED
1250 ARRIVE LINCOLN COUNTY SOLID WASTE SITE
1325 DRILL RIG SUPPORT VEHICLE DECON'D AT LANDFILL USING SPRAY WASH. DECON PERFORMED AT DECON PAD
1330 NOTE: DRILL RIG IS FOREMOST DR 24 DUAL ROTARY RIG
1340 WASTE FROM SITE DISPOSED OF.
1345 PER REQUEST OF USEPA RPM

Location LIBBY - PARKER WELL Date 5/1/06

Project / Client

ALL 10" DRILL PIPE LESS THAN 12' LONG LEFT WITHIN LINCOLN CO. CLASS IV LANDFILL AREA

1350 DRILLERS LEAVE FOR BUTTE.

1351 R. KNUTSON LEAVES, CLASS IV LANDFILL GATE IS SECURED

1355 LEAVE LANDFILL w/ P. LAMMERS

1405 ARRIVE CDM LIBBY

ALL WORK DONE IN LEVEL D PPE

DOWNTIME FROM 0980 TO 1110 DUE TO STUCK RIG

NO OTHER SIGNIFICANT DELAYS.

NOTE: SAMPLE COLLECTED AT 10:10 WAS COMPOSITE FROM DRILL RIG, DOWNHOLE EQUIPMENT, AND OTHER EQUIPMENT. SAMPLE ID IS PW-000001.

CM 5/4/06

5/1/06

Location LIBBY - PARKER PROP. Date 5/2/06

Project / Client 5000 HWY 37 N.

ANDY HORN

0700 ARRIVE AT SITE. R. KNUTSON, ED ~~COSINS~~ COSENS, B. TROUTMAN ONSITE. CM 5/2/06

0710 HOLD SAFETY MTG. TOPICS: GEN. HEAVY EQUIP SAFETY, ROUTE TO HOSPITAL, ASBESTOS SAFETY & POTENTIAL HAZARDS

PERSONNEL PRESENT:
R. KNUTSON, MCS
B. TROUTMAN, MCS
E. COSENS, CHAMBERLIN PUMP (O'KEEFE)
A. HORN, CDM

CM 5/2/06

0712 TROUTMAN & KNUTSON OFFSITE FOR EQUIPMENT & SUPPLIES.

0715 DTGW = 26.05' BTOC, TOC IS 2.0' ABOVE GROUND SURFACE
DTGW = 26.05' - 2.0 = 24.0' BGS.

0780 SETTING UP TO DEVELOP WELL

~~0800 PULL FIRST B~~

0800 TROUTMAN ONSITE.

0805 PULL FIRST BAILER, BAILER HAS GRAY VISCOUS LIQUID, THICK

0815 3RD BAILER HAS SAND FROM ~62' BGS PULLED CM 5/2/06

Location LIBBY PARKER PROP Date 5/2/06

Project / Client

ORIGINAL TD BY PUMP OPERATOR WAS 59' BTOC (BELOW TOP OF CASING). SAMPLED GRAY LIQUID.

0820 B. TROTMAN ONSITE

0825 SPEAK W/ P. LAMMERS RE NEED TO COORDINATE SAMPLING FOR ASBESTOS W/ LIBBY STAFF

0826 PULLING FINE SAND FROM WELL. NOTE! USING SAND BAILER. CHECK COND METER CALIBRATION 1324 µMHOS W/ 1413 µMHOS STD pH = ~~10.00~~ 10.70 W/ pH 10.00 STD.
CAH 5/2/06 — CAH 5/2/06 —

WARM STANDARDS W/ FORMATION WATER FOR CALIBRATION

0845 JMF SERVICES ONSITE W/ PORTO-LET.

0855 JMF OFFSITE.

0900 BAILING SAND FROM WELL, SAND IS FINE, GRAY SAND, SAME AS OBSERVED BELOW 67' BGS. MINOR CLOGGING IN BAILER DUE TO SAND.

0905 FORMATION WATER pH = 13.58,

Location LIBBY PARKER PROP. Date 5/2/06

Project / Client

PITOTO LOG

TIME	#	SUBJECT	VIEW DIR
0846	1	SAND BAILER	W
1059	2	WELLHEAD PUMP + SAMPLING MA SETUP	

Andy Horn 5/2/06

Location LIBBY-PARKER PROP. Date 5/2/08

Project / Client

NOTE: pH METER ~~READS~~ ON STILL NOT CALIBRATED EXACTLY, READS 10.21 w/ pH 10.0 STANDARD.

0945 SPEAK w/ M. SMITH, INFORM THAT WELL LIKELY HAS GROUT IN COMPLETION ZONE.

0950 INFORM P. LAMMERS, J. MONTERA OF POSSIBLE SITUATION

0955 R. KNUTSON, DARREN DEETS, MCS ONSITE.
INFORM KNUTSON THAT WELL APPEARS TO HAVE GROUT IN IT. KNUTSON ~~DIRECTS~~ 5/2/08 STATES THAT DEVELOPMENT WILL PROCEED TO EVALUATE WELL CONDITIONS.

1005 KNUTSON, DEETS OFFSITE

1010 SPEAK w/ P. LAMMERS, INFORM THAT DEVELOPMENT WILL CONTINUE TO EVALUATE WELL PERFORMANCE

1011 NOTE: SETTING UP SUBMERSIBLE PUMP, TD = 69.5' BTOC, CAN NOT REMOVE ANY MORE SAND w/ BAILER

1035 SETTING UP DISCHARGE HOSE

Location LIBBY-PARKER PROP Date 5/2/08

Project / Client

1040 CALIBRATING pH METER. NOT SATISFIED w/ PREVIOUS CALIB. (READING 10.21 w/ pH 10.0 STD)
- NOTE: THIS AGREES w/ DRIFT DUE TO TEMP (8°C). WILL ACCEPT CURRENT CALIBRATION
CHECK CALIBRATION.
pH = 6.99 w/ pH 7.00 STD - OK
pH = 10.20 w/ PH 10.00 STD, WILL RECALIBRATE.

1055 SET UP TO PUMP WELL
DTGW = 26.20 BTOC

1056 BEGIN PUMPING WELL, HOSE LEAKS, REPLACING w/ DIFFERENT HOSE

1059 RESUME PUMPING, MINOR LEAK OBSERVED, SHUT DOWN

1102 REPLACE w/ DIFFERENT SECTION OF HOSE. RESUME PUMPING

1105 SAMPLE EFFLUENT, pH = 9.25
pH CHECK pH = 10.20 w/ pH 10.00 STD.

1120 P. LAMMERS ONSITE, UPDATE J. MONTERA

1130 NOTE: B. TROUTMAN STATES THAT

Location LIBBY-PARKER PROP. Date 5/2/06

Project / Client

Andy Horn

GW LEVEL LOG

TIME	DTGW (BTOC)	COMMENTS
1055	26.20	IMMEDIATELY BEFORE PUMPING
	— SHUT DOWN DUE TO LEAKING HOSE	
1136	30'6"	Q = 4.5 GPM
1256	32'11"	Q = 6.8 GPM (JUST INCREASED Q)
1333	33'9"	Q = 6.3 GPM
1411	36'1"	Q = 8.9 GPM
1453	36'9"	Q = 8.9 GPM
1500	41'5"	Q = 13.6 GPM FLOW INC. AT 1500
1522	42'2"	Q = 13.6 GPM SHUTTING DOWN TO SURGE
	— BEGAN SURGING w/ BAILER —	CAH 5/2/06

Andy Horn 5/2/06

Location LIBBY-PARKER WELL Date 5/2/06

Project / Client

DEVELOPMENT LOG

TIME	pH	SC	TEMP	VOL	COMMENTS
1105	*9.25	341	13.3		INIT. GRAY WATER*
1114	*8.82	387	14.6		WATER GRAY*
1136	*8.45	498			Q=4.5 GPM
1307	—	566	14.5		Q=6.8 GPM
1333	*7.75	577	15.0		WATER CLEARING

CAH 5/2/06

BEGIN TAKING TURBIDITY READINGS AS WATER CLEARS

TIME	PH (SU)	SC (uMHOS/cm)	TEMP °C	TURB (NTU)	COMM'S
1346	*7.81	520	14.9	110	SAND DECREASING
1414	*7.83	583	14.6	120	
1453	*7.48	590	14.1	120	ASBESTOS SAMPLE COL.
1522	*7.80	604	14.4	170	SHUT DOWN TO SURGE

Andy Horn 5/2/06

* READINGS MADE BEFORE pH METER THOROUGHLY CALIBRATED. SEE 10:40 ENTRY

Location L1334 - PARKER PROP Date 5/2/06

Project / Client

IN PREVIOUS DISCUSSION W/ PARKERS, M. PARKER STATED THAT ORIGINAL WELL PRODUCED SAND. THIS OCCURRED APPROX 0925 4/30/06.

1150 INFORMING P. LAMMERS OF CONDITIONS

1151 R. KNUTSON ONSITE.

1220 LAMMERS, KNUTSON OFFSITE

1222 INCREASE FLOW RATE

1245 M. PARKER ONSITE, W/ LEGRANT CHILD

1255 M. PARKER + CO OFFSITE (AT BLDG)

1256 COSENS REPORTS PRODUCING AT 6.8 GPM. DTGW = 32' 11"

NOTE: AT 4.5 GPM, DTGW WAS 30.6' BTOC

1320 SPEAK W/ M. SMITH, UPDATE, HE'S GOING TO CHECK ON DRINKING WATER STANDARD FOR pH.

1321 WHEN M. PARKER ONSITE, DISCUSSED PROGRESS, INFORMED THAT WELL IS IN DEVELOPMENT. SHOWED PARKER RUTS FROM DRILL RIG AND INFORMED HIM THAT SCRAP PIPE IS UNAVAILABLE. PARKER INDICATES HE IS PLEASED

Location L1334 - PARKER WELL Date 5/2/06

Project / Client

W/ CURRENT STATUS ON 5/2/06 THESE ITEMS

1300 UPDATE P. LAMMERS RE MTG. W/ PARKER.

1331 COSENS REPORTS WELL IS CURRENTLY OPEN TO 68' 10" BTOC

1334 WATER CLEARING, WILL BEGIN TURBIDITY READINGS. CHECK TURBIDIMETER CALIB. TURB = 0.90 W/ 1 NTU STD CLEAN CELL, RECHECK W/ CASE LID DOWN (IN ADDITION TO METER LID)

TURB = 0.95 W/ 1 NTU STD - OK

TURB = 10 W/ 10 NTU STD - OK

1340 Q (PUMPING RATE) IS 6.3 GPM

1342 R. KNUTSON ONSITE W/ SUPPLIER OF BENTONITE, NORTHWEST PIPE FITTINGS.

1345 BENTONITE FOR WELL ABANDONMENT AT 5/2/06 UNLOADED, DRIVER OFFSITE

1350 INCREASE Q

1355 ADJUSTING FLOW, Q = 8.9 GPM

Location LIBBY-PARKER PROP. Date 5/2/06

Project / Client

1415 CHECK pH CALIB. pH=10.21 w/pH 10.00 SOLUTION.
pH = 7.04 w/ PH 7.00 SOLN.

1436 RECALIBRATE pH METER, CALIBRATION CHECK STILL INDICATES pH OF 10.16 w/ PH 10.00 STANDARD. LIMITED AMOUNT OF pH 10 STANDARD AVAILABLE, THIS WILL HAVE TO SUFFICE FOR TODAY.
pH = 7.07 w/ 7.00 STD.

1445 COLLECT SAMPLE FOR ASBESTOS IN WATER.

1450 INFORM P. KAHL (MESSAGE), T. COOK (MSG.) THAT SAMPLES WILL BE COMING IN IN PM

~~1451~~ 1500 INCREASE Q TO 13.6 GPM

1510 SPEAK w/ M. SMITH, THERE IS NO MANDATORY STD FOR pH, SECONDARY STD. IS 6.5 - 8.5 (NOT MANDATORY)

1522 WILL SHUT OFF PUMP + SURGE w/ BAILER

1530 DISINFECTING BAILER w/ BLEACH SOLN. NOTE: PUMP + PIPING HAD BEEN CLEANED w/ STEAM CLEANER

Location LIBBY - PARKER PROP. Date 5/2/06

Project / Client

PRIOR TO USE.

1550 DISINFECT SAND BAILER,

1550 V. LINNTSON ONSITE

1552 P. LAMMERS ONSITE

1555 SURGING WELL

~~1410~~ 1610 REINTRODUCE WATER SAMPLE

1620 TO P. LAMMERS.

~~1420~~ LAMMERS OFF-SITE

~~1435~~ 1635 STOP SURGING, PULLING

1640 SAND OFF BOTTOM.

~~1440~~ BAILER HAS SAND,

~~1441 DTGW = 63'~~ GW 5/2/06

TD = 63' BTOC

1648 TD = 67' BTOC AFTER 4-6 SAND BAILER

1655 TD = 67' BTOC, 65 BGS

1704 TD = 69'10" BTOC, 67'10" BGS.

1706 HITTING BOTTOM OF WELL

1710 TD = 69'8" BTOC

~~1715~~ TO PULL SAND BAILER, ~~SETTING UP PUMP~~. WILL PUMP AFTER FURTHER BAILING TOMORROW. AGITATION DUE TO BAILING IS LIKELY TO HAVE MOBILIZED

Location LIBBY - PARKER PROPERTY Date 5/2/06

Project / Client

ADDITIONAL ASBESTOS, IF PRESENT, AND WILL RESULT IN HIGHLY TURBID SAMPLE, AS OPPOSED TO SAMPLE OF FORMATION WATER ENTERING WELL UNDER PUMPING CONDITIONS. FOR THIS REASON, NO ASBESTOS SAMPLE WILL BE TAKEN NOW. DEVELOPMENT IS NOT COMPLETE. SAMPLE TO BE COLLECTED AT END OF DEVELOPMENT

1725 P. LAMMERS ONSITE

1735 PACKING GEAR

1740 COSENS + TURNTMAN OFFSITE

1745 LAMMERS OFF-SITE.

1755 SECURE SITE, LEAVE FOR DM

NOTES:

→ WEATHER TODAY: SUNNY, ~55°-60°F, NO APPRECIABLE WIND

→ ALL WORK DONE IN LEVEL D PPE

→ ALL DEVELOPMENT WATER DISCHARGED TO KOOTENAI RIVER

→ SOFT GROUT APPEARED TO BE PRESENT IN WELL AT START

Location LIBBY - PARKER PROP. Date 5/2/06

Project / Client

OF DEVELOPMENT REMOVED WITH SAND BAILER. WELL DEVELOPMENT PROGRAM MODIFIED IN FIELD TO DEAL W/ THIS ISSUE. IN ADDITION, FILTER PACK DOES NOT APPEAR TO EXTEND OVER FULL LENGTH OF SCREEN.

→ FIELD METER ~~CALIB~~ 5/2/06

SERIAL ~~#~~ 5/2/06 NUMBERS

YSI 63 pH/SC/TEMP METER: 04D6681

LAMOTTE TURBIDIMETER (MODEL 2020): SN 3302-2202

METERS PROVIDED BY PINE ENVIRONMENTAL.

→ WATER FROM SAND BAILING DISCHARGED TO OPEN 55-GAL DRUMS, WILL PUMP OUT ON 5/3/06

Andy Lorn 5/2/06

Location LIBBY-PARKER PROP. Date 5/3/06

Project / Client 5000 Hwy 37 N.

[signature]

0700 ARRIVE AT, UNLOCK SITE, COSENS, TROUTMAN ONSITE.

0710 HOLD SAFETY MEETING TOPIC: GEN HEAVY EQUIP SAFETY.
PERSONNEL PRESENT:
E. COSENS, O'KEEFE
B. TROUTMAN, MCS
A. HORN, CDM

0920 DISCUSS APPROACH FOR TODAY: WILL SURGE WELL W/ SAND ~~PUMP~~ BAILER ~~PUMP~~ + ~~PUMP~~ REMOVE SAND FROM WELL [initials] 5/3/06 [initials] 5/3/06

0925 SPEAK W/ P. LAMMERS, UPDATE ON STATUS. ASBESTOS SAMPLE FROM YESTERDAY SUBMITTED TO LAB.

~~0930 DISINFECTING SAND BAILER W/ BLEACH SOLN.~~

0931 WILL NOT USE BLEACH ON SAND BAILER PRIOR TO SAMPLING FOR pH. BAILER HAS BEEN STORED ON PLASTIC SHEETING (CLEAN) OVERNIGHT, UNLIKELY TO HAVE BEEN CONTAMINATED.

0739 CHECK pH METER CALIBRATION

Location LIBBY-PARKER PROP. Date 5/3/06

Project / Client

[signature]

pH = 7.07 w/ pH 7.00 STANDARD
pH = 10.20 w/ pH 10.00 STD. SOLN.

0740 DTGW = 26' 1½" BTOC

0741 TD = 68' 11" BTOC

0745 CHECK SPEC. COND CALIB.
SC = 1351 w/ 1413 uMHOS STD.
(W/IN 10% - OK).
NOTE: pH CALIBRATION SLIGHTLY OUT OF RANGE ON HIGH END, SLOPE ADJUSTMENT SHOULD CORRECT MINOR ERROR.

0755 SPEAK W/ P. KARI RE: SAMPLE SUBMITTAL, INFORM OF ANTICIPATED SAMPLE SUBMITTAL

0756 PULL FIRST BAILER

0758 CHECK TURBIDIMETER CAL.
TURB = 0.90 NTU w/ 1 NTU STD
TURB = 10 NTU w/ 10 NTU STD.

0803 SURGING VIGOROUSLY W/ BAILER

0810 SPEAK W/ M. SMITH, UPDATE, ~~SMITH ST~~ [initials] 5/3/06 DESCRIBE AIR BLAST W/ COSENS + TROUTMAN, SMITH STATES METHOD LOOKS PROMISING.

Location LIBBY - PARKER PROP. Date 5/3/06

Project / Client

[signature]

DEVELOPMENT LOG

TIME	pH (SU)	SC (µMHOS)	T (°C)	TURB (NTU)	COMM'S
0756	8.05	771	11.4	140	INITIAL BAILER FOR 5/3/06
					on 5/3/06
0832	8.13	744	13.7	VERY TURBID	3RD BAILER
0930	8.09	679	13.2	VERY TURBID	AFTER SURGING
1133	7.87	786	15.6	VERY TURBID	INIT. AFTER PUMP STARTUP
1140	7.81	570	14.6	160	PUMP INTAKE AT 66.5'
1202	7.78	626	14.2	11	BTOC
1207	7.77	613	14.3	12	INTAKE AT 66.5' Q=25 GPM
1227	7.72	617	13.5	10	SLIGHTLY SANDY
1231	7.76	602	14.0	12	RAISED PUMP TO 64.5' BTOC
1325	7.76	631	14.1	3.6	PUMP AT 62.5' BTOC Q=33.3 GPM
1345	7.74	623	14.1	3.5	
1411	7.73	631	14.4	4.5	PUMP AT 60.5' BTOC
1440	7.69	631	14.4	3.1	PUMP RAISED TO 58.5' BTOC
1503	7.72	630	14.8	1.7	
			on 5/3/06		
1524	7.75	600	14.3	5.9	PUMP RAISED TO 51' BTOC
1550	7.77	635	14.8	1.9	SAMPLE FOR ASBESTOS 1555 P.56
1624	7.78	642	15.0	1.1	
1656	7.74	637	15.3	1.9	PUMP LOWERED TO 51' BTOC
1720	7.72	683	15.9	1.2	PUMP LOWERED TO 54' BTOC
1749	7.75	641	15.8	2.6	FINAL DEV. SAMPLE

Location LIBBY - PARKER PROP. Date 5/3/06

Project / Client

[signature]

0815 LEAVE VOICE MAIL MSG. w/ P. LAMMERS UPDATING RE: pH = 8.05

0820 SPEAK w/ T. COOK RE pH STANDARDS. TC CHECKING ON LOCAL SOURCE

0823 SPEAK w/ LAMMERS, UPDATE.

0825 SURGING WELL

0826 WELL TD IS 65'7" BTOC

0830 BAILING SAND

0845 SPEAK w/ T. BURGESSER RE pH CALIBRATION ISSUE. T.B. STATES THAT UNDER CIRCUMSTANCES THAT MINOR VARIANCE IN CALIB. on 5/3/06 DOES NOT PREVENT DETERMINATION OF pH TO ACCURACY NEEDED TO EVALUATE POTENTIAL PRESENCE OF CEMENT IN WELL. VARIATION IS MINOR COMPARED TO pH OF GROUT-IMPACTED WATER COMPARED

0855 TO FORMATION WATER.

~~0955~~ EXCESS WATER IN DRUMS (FROM SAND

on 5/3/06 BAILING) PUMPED TO RIVER.

0914 SPEAK w/ T. CROWELL RE

Location LIBBY-PARKER PROP. Date 5/3/06

Project / Client

DEPTH TO WATER LOG, TD LOG

TIME	DTGW (BTOC)	TD (BTOC)	COMMENTS
			(TD = ~~69'8" BTOC~~ 5/2/06, 17:10)
0740	26'1½"		TD = 68'11" BTOC at 5/3/06
0900	—	68'10"	AFTER SURGING + BAILING SAND
0915	NA	67'7"	AFTER SURGING, NO BAILING
0922	NA	67'4"	" " " "
0927	NA	67'3"	" " " "
0938	NA	69'0"	AFTER BAILING SAND
1001	NA	68'2"	AFTER SURGING
1012	NA	70'4"	AFTER BAILING SAND
1014	NA	69'8"	AFTER SITTING 2 MIN.
1112	26.20'	NA	MEAS. w/ SLOPE METER (PINE ENV)
			at 5/3/06 w/ DRILLERS TAPE 26'2"
1130	21.57	NA	DTGW IN ORIGINAL (1st) WELL
1147	34'11"	NA	Q = 25 GPM
1206	35'7"	NA	Q = 25 GPM
1223	37'4"	NA	Q = 30 GPM INCREASED Q AT 12:15
~~1227~~			at 5/3/06
1238	37'8"	NA	Q = 30 GPM
1248	37'10"	NA	Q = 30 GPM
1345	41'0"	NA	Q = 33.3 GPM
1355	26'3"	NA	SHUT DOWN TO CHANGE PIPE (REMOVE SECTION TO RAISE PUMP)
			at 5/3/06

Location LIBBY-PARKER PROP. Date 5/3/06

Project / Client

	pH STANDARD SOLUTION. T.C. MAY BE ABLE TO OBTAIN STD. TODAY FROM KALISPEL
0915	SURGING VIGOROUSLY, RUNNING BAILER UP + DOWN IN CASING ABOVE SCREEN.
0925	UPDATE P. LAMMERS ON STATUS
0929	BAILING SAND FROM WELL
0940	COSENS STATES THAT HE'LL BAIL OUT SAND TO ~69' BTOC, THEN SAND LEVEL RISES ~0.5' w/OUT BAILING AND MORE OR SURGING
0947	RESUME SURGING, USING LONG STROKES TO MOVE BAILER COMPLETELY IN + OUT OF WATER
1000	STOP SURGING
1002	BAILING SAND
1012	MEASURE TD 70'4" BTOC INDICATING THAT PREVIOUS MAX TD OF 69'8" IN ERROR.
1015	SPEAK w/ T. CROWELL RE pH STANDARDS (TYPE NEEDED) at 5/3/06
1016	SETTING UP TO PUMP WELL.
1035	DISINFECT PUMP + DOWNHOLE PIPING

Location LIBBY - PARKER PROP. Date 5/3/06

Project / Client

1050 SPEAK W/ P. LAMMERS, UPDATE ON STATUS
1109 P. LAMMERS, M. CIRIAN ONSITE
1105 R. KNUTSON, D. ONSITE
1110 SPEAK W/ T. COOK, HE CAN GET pH STANDARDS
1130 MEASURE PARKER'S WELL IN WELLHOUSE, DTGW = 21.57
1133 BEGIN PUMPING WELL, INTAKE SET AT 66.5' BTOC,
1140 Q = 5GAL/12SEC = 25GPM
1154 T. COOK ONSITE
1155 KNUTSON, DEETS OFFSITE
1156 LAMMERS, CIRIAN OFFSITE
1157 COOK OFFSITE
1205 Q = 5 GAL/12 SEC. = 25 GPM
1215 INCREASE Q
1216 LERAIT PARKER ONSITE
1220 Q = 5 GAL/10 SEC = 30 GPM.
1221 L. PARKER OFFSITE
1235 NOTE: MRS. PARKER STATES THAT OLD WELL PRODUCED SAND SIMILAR TO THAT IN A SAMPLE SHE SAW. STATES THAT THEY RAISED

Location LIBBY - PARKER PROP Date 5/3/06

Project / Client

WELL 5' AND INSTALLED SAND FILTER
1339 SPECIFIC CAPACITY IS 26.2' - 37.7' = 11.5' DRAWDOWN
30GPM/11.5 = 2.6 GPM/ft.
1245 SPEAK W/ M. SMITH, UPDATE STATUS
1247 LEAVE VOICE MAIL FOR P. LAMMERS RE: 30 GPM
1248 Q = 5GAL/10SEC = 30GPM
1249 INCREASE Q TO 5GAL/9 SEC = 33.3 GP.
1312 RAISE PUMP 2' TO 62.5' BTOC
1313 NOTE: ALL DISCHARGE MEASUREMENTS FROM 3 READINGS
1346 SHUT DOWN PUMP TO RAISE NEXT 2', MUST REMOVE SECTION OF PIPE
1354 B. TROUTMAN OFFSITE FOR SITE PHOTO (OVERVIEW)
1356 RESUME PUMPING FROM 60.5' BTOC
1415 Q = 5GAL/8SEC = 37.5 GAL
1420 UPDATE P. LAMMERS ON STATUS
1435 SPEAK W/ T. CROWELL INFORM THAT 6 AIR STRIPPER SAMPLES CAN BE EXPECTED

Location LIBBY - PARKER PROP. Date 5/3/06

Project / Client

[signature]

PHOTO LOG

TIME	#	SUBJECT	VIEW DIR
1320	1	SAND PRODUCED FROM 5 GALLONS PUMPED @ 33 GPM	NA
1736	2	SAMPLE OF WATER PRODUCED AFTER ~~5 HRS~~ 6 HRS PUMPING	NA
1800	3	WELL PUMP	NA

[signature] 5/3/06

ANDY HORN

Location LIBBY - PARKER PROP. Date 5/3/06

Project / Client

[signature]

DEPTH TO WATER LOG

TIME	DTGW (BTOC)	TD BTOC	COMMENTS
1410	41'2½"	NA	Q=37.5
1418	41'6"	NA	Q=37.5
1435	41'2½"	NA	—
1500	41'8½"	NA	Q=33.3 GPM
1520	26'3"	69'7" ~~NA~~ 5/3/06	SHUT DOWN SINCE 1510 TO REMOVE SEC. PIPE
1622	41'9½"	NA	Q=33.3 GPM
1656	40'8"	NA	Q=33.3 GPM
1719	41'1"	NA	Q=33.3 GPM
1741	41'6"	69'8"	Q=33.3 GPM
~~1801~~	5/3/06		
1801	21.63		ORIGINAL PARKER WELL INSHED

[signature] 5/3/06

ANDY HORN

Location LIBBY - PARKER WELL Date 5/3/06

Project / Client

TOMORROW, LAST SAMPLE WILL NEED RESULTS ASAP

1437 RAISE PUMP TO 58.5'

1438 NOTE: B. TROTMAN ONSITE AT 1412

1445 T. CROWEN REPORTS THAT RESULTS FROM GW SAMPLE YESTERDAY ~~ARE~~ WILL BE NOT AVAILABLE UNTIL THURS. 5/4/06.

1510 SHUT DOWN PUMP TO RAISE NEXT 2' TO 56.5' BTOC

1523 RESUME PUMPING FROM 51' BTOC

1525 ANALYZE DI BLANKS w/ TURBIDITY METER. TURB = 0.40 NTU

1540 Q = 5 GAL/9 SEC = 33.3 GPM

1341 R. KNUTSON ONSITE

1546 LAMMERS ~~& P. KARL ONSITE~~ ON 5/3/06

1555 COLLECT SAMPLE PW-00003 FROM DISCHARGE SAMPLE PORT.

1556 RELINQUISH SAMPLE TO P. LAMMERS FOR TRANSPORT TO LAB FOR ASBESTOS ANALYSIS. FIELD PARAMS P.48

1557 R. KNUTSON OFFSITE.

ANDY HORN 5/3/06

Location LIBBY - PARKER WELL Date 5/3/06

Project / Client

SAMPLE LOG

				SAMPLER
PW-00001	10:10	5/1/06	P29	S. OLIVER
PW-00002	14:45	5/2/06	P.42	A. HORN
PW-00003 050306	15:55	5/3/06	P.56	A. HORN
PW- 00003				
PW-00004 050406	09:41	5/4/06	P.66	A. HORN
PW- 00004				
PW-00005 050406	0939 ~~09:40~~	5/4/06 5/4/06	P.69	A. HORN
PW- 00005				
PW-00006 050406	0945	5/4/06	P.69	A. HORN
PW- 00006				
PW-00007 050406	11:40	5/4/06	P.71	A. HORN
PW- 00007				
PW-00008 050406	12:25	5/4/06	P.71	A. HORN
PW- 00008				
PW-00009 050406	1405	5/4/06	P.73	A. HORN

FIELD DATA SHEET W/000037

FIELD DATA SHEET # W/000038 ON 5/4/06

ANDY HORN 5/4/06

Location LIBBY - PARKER PROP. Date 5/3/06

Project / Client

1605 CHECK pH METER CALIBRATION.
pH = 7.07 w/ pH 7.00 STD.
pH = 10.17 w/ pH ~~7~~ 10 AM 5/3/06 10.01 STD
1615 B. TROUTMAN OFFSITE
1625 Q = 5 GAL / 9 SEC. = 33.3 GPM
1630 SHUT DOWN TO MOVE PUMP IN WELL (VERTICALLY)
1635 CANNOT CONTACT T. CROWELL RE QUESTION ABOUT TURNAROUND TIME FOR LAST STEP TEST SAMPLE ON 5/4/06. CONTACT S. OLIVERIA, HE REFERS TO RON MAHONEY AT EMSL AM 5/4/06
1645 RON AT EMSL STATES THAT TURNAROUND FOR SAMPLE OF LOW TURBIDITY WATER (< 3 NTU) SHOULD BE < 4 HRS.
1648 RESUME PUMPING FROM 54' BTOC
1655 Q = 5 GAL / 9 S = 33.3 GPM
~~1725 Q =~~ AM 5/3/06
1720 LOWER PUMP TO ~~54' BTOC~~ 56' BTOC AM 5/3/06
1745 LOWER PUMP TO 58' BTOC BEGIN RAISING SLOWLY TO TOP OF SCREEN.
1749 RAISE TO TOP OF SCREEN, COLLECT LAST SAMPLE FOR FIELD PARAMS,

Location LIBBY - PARKER PROP. Date 5/3/06

Project / Client

SHUT DOWN PUMP
~~1610~~ 1810 AM 5/3/06 SETTING UP FOR STEP DRAWDOWN TEST.
1817 ADJUSTING PUMPING RATE FOR FIRST STEP. USING FLOW METER TO MEASURE DISCHARGE METER IS TOTALIZING, NEPTUNE BRAND. SN 31945548
1830 LOAD GEAR, SECURE WELLHOUSE, COVER WELL
1835 E. COSENS OFFSITE, SECURE GATE, LEAVE FOR DM
1845 ARRIVE CDM LIBBY OFFICE.
NOTES: ALL WORK DONE IN LEVEL D PPE
→ NO SIGNIFICANT DOWNTIME OR DELAYS DURING TODAY'S ACTIVITIES.
→ NOTE: THIS SECOND DAY OF DEVELOPMENT PERFORMED TO REMOVE GROUT FROM WELL AND ~~PROMOTE~~ AM 5/3/06 ALSO REDUCE SAND PRODUCTION.
DISCHARGE MEASURED W/ 5-GAL BUCKET + STOPWATCH TO

Location LIBBY - PARKER PROP. Date 5/3/06

Project / Client

PRESENT DAMAGE TO FLOWMETER BY SAND. DISCHARGE RATES RECORDED REGULARLY.

→ STEP TEST TO BEGIN ON 5/3/06, INITIAL DISCHARGE TO BE SAMPLED TO EVALUATE IMPACTS DUE TO GROUT.

→ pH METER DID NOT CALIBRATE W/IN GENERALLY ACCEPTED TOLERANCES ~~OF +/0.1~~ OF +/- 0.1 STANDARD UNIT. CONSULTED W/ T. BURGESSER, CDM CHEMIST, + DETERMINED THAT EXCEEDANCE ~~IS~~ (pH=10.20 W/ pH 10.00 STD) IS MINOR AND ~~DOES~~ IS ACCEPTABLE FOR DETERMINATION OF GROUT'S PRESENCE IN WELL. SEE 8:45 ENTRY. SAME INSTRUMENTS USED FOR WATER QUALITY ANALYSIS AS STATED ON P. 45

pH 7.00 STANDARD (STD) PROVIDED BY PINE ENV., LOT # 2507093 EXP 6/06 pH 10.00 STD AS ABOVE, LOT # 2504111 EXP 10/08 ~~pH~~ 5/3/06. THIS SUPPLY OF

Location LIBBY - PARKER PROP. Date 5/3/06

Project / Client

pH 10.00 STD DEPLETED AT 7:39 AM, ADDITIONAL STANDARD SOLUTION PROVIDED BY T. COOK. STANDARD IS 10.01 pH BUFFER MANUFACTURED BY THERMO ELECTRON CORP., "CERTIFIED TRACEABLE TO NIST STANDARD REFERENCE MATERIAL", DOES NOT HAVE APPARENT LOT # ON BOTTLE, STAMP ON BOTTOM OF BOTTLE READS "101 12/06." ~~BUFFER~~ STANDARD IS "ORION APPLICATION SOLUTION," ORION 910110 REF. FOR REORDERING. ~~1015~~ 2215 CALIBRATE pH METER W/ NEW pH 10.01 STANDARD

pH = 7.02 W/ pH 7.00 STD

pH = 10.06 W/ pH 10.01 STD.

THIS CALIBRATION IS ACCEPTABLE FOR HIGHER DEGREE OF ACCURACY

NOTE: SPECIFIC CONDUCTANCE STANDARD PROVIDED BY PINE ENV., STD IS TYPICAL 143 µMHOS STANDARD SPEC. LOT # 2604239, EXP 4/07

Location LIBBY - PARKER WELL Date 5/3/06

Project / Client

Andy Horn

TURBIDIMETER STDS PROVIDED WITH INSTRUMENT.
WEATHER TODAY: PARTLY CLDY, ~50°-60°F (FROST IN MORNING)
N. WINDS 5-15 MPH, GUSTY (IN PM)

Andy Horn 5/3/06

Location ~~5/4/06~~ LIBBY - PARKER PROP. Date 5/4/06

Project / Client 5000 Hwy 37 N.

Andy Horn ANDY HORN

0625 ARRIVE AT SITE. TROUTMAN, COSENS ONSITE. BE
0630 HOLD HEALTH + SAFETY MTG.
TOPIC - PINCH HAZARDS.
PERSONNEL PRESENT
G. COSENS, O'KEEFE
B. TROUTMAN, MCS
A. HORN, CDM
0831 BEGIN SETTING UP.
0840 SPEAK w/ P. LAMMERS RE MCS POSITION THAT NO FURTHER DEVELOPMENT REQUIRED. WILL MAKE THIS DETERMINATION AFTER FIRST SAMPLE ANALYZED FOR pH.
0700 REVIEW PLAN FOR TESTING & SAMPLING RE DECISION FLOW CHART.
0701 R. KNUTSON ONSITE.
0705 CHECK pH METER CALIBRATION
pH = 7.08 w/ pH 7.00 STD
pH = 10.12 w/ pH 10.01 STD
COND = 1331 µmhos/cm w/ 1413 µmhos STD
TURBIDITY = 0.95 NTU w/ 1 NTU STD

Location LIBBY - PARKER PROP Date 5/4/06

Project / Client

WATER LEVEL + TD LOG

TIME	DTGW (BTOC)	TD	COMMENTS
0648	26.27'	NA	STATIC WATER LEVEL
1024	33.75	NA	Q ≈ 20 GPM
1149	33.75	NA	Q = 19 GPM
1303	39.75	NA	Q = 33.3 GPM
1801	39.95		Q = 34 GPM
1811	26.33'	NA	SWL PRIOR TO TEST
1922	37.67	NA	~~Q = 36 GPM~~ 5/4/06
1929	21.78		PREVIOUSLY EXISTING WELL 2003 WELL

Andy Horn 5/4/06

Location LIBBY - PARKER PROP Date 5/4/06

Project / Client

TURB = 10 NTU w/ 10 NTU STD

0719 W/ APPROX 20' OF WATER IN 2" DISCHARGE PIPE, AT 10 GPM WATER FROM WELL SHOULD BE ~~PRODUCED~~ 5/4/06 REACH SURFACE IN ~20 SEC.

0.16 GAL/ft X 20 ≈ 3.2 GAL

3.2 GAL / 10 GAL/MIN = 0.32 MIN

0.32 MIN X 60s = 19 SEC.

0720 INFORM KNUTSON + TRAUTMAN THAT pH = 10.12 w/ pH 10.01 STD, ALL AGREE THAT CALIBRATION IS ADEQUATE. SEE P. 49, 8:45 ENTRY FOR DISCUSSION OF pH CALIBRATION.

0725 SETTING UP TO START TEST

0730 TROLL COLLECTING DATA, FIRST 2 DATA POINTS READ 20.027' WATER ABOVE TRANSDUCER.

0731 WILL COLLECT pH SAMPLE AFTER ~~120~~ 5/4/06 180s. PUMPING. TO REMOVE STANDING WATER FROM PIPE + ALLOW 3 5/4/06 PIPE VOLUMES TO BE EVACUATED + BEGIN

Location LIBBY - PARKER PROP. Date 5/4/06

Project / Client

	PULLING STANDING WATER FROM WELL.
0736	TOTALIZER: 01,344,555
0739	BEGIN PUMPING
0741	COLLECT PW-00004 050406 SAMPLE AFTER EXACTLY 180 SEC. OF PUMPING.
0743	DRAWDOWN IS ~3' NOW
0745	CHECK FLOW RATE, Q ≈ 10 GAL/65 sec FOR FLOW METER.
0800	DISCUSS pH RESULT W/ R. KNUTSON, STATE THAT DECISION ON WHETHER DEVELOPMENT IS COMPLETE DEPENDS ON SENIOR REVIEW OF DATA, STATE SECOND DAY OF DEVELOPMENT DUE TO GROUT IN WELL.
0802	KNUTSON + TRUTMAN OFFSITE. TRUTMAN RETURNING THIS MORNING
0803	VERIFY PUMPING RATE W/ BUCKET + STOPWATCH. Q = 5 GAL/30 SEC = 10 GPM
0819	SPEAK W/ M. SMITH, STATES THAT SPECIFIC CONDUCTANCE (SC or Sp.Cond) RAISES CONCERN, pH APPEARS ADEQUATE. WILL CONTINUE TO

Location LIBBY - PARKER PROP. Date 5/4/06

Project / Client

FIELD PARAMETER LOG

TIME	pH (SU)	SP.COND (µmhos/cm)	TEMP (°C)	TURB (NTU)	
0741	7.85	922	13.5	27	SAMPLE PW-00004
0820	7.75	657	14.2	2.5	
0900	7.77	653	14.1	1.5	
0939	7.79	674	14.1	3.6	PW-00005-050406
0945	7.81	689	13.9	3.5	PW-00006-050406
1102	7.79	657	13.5	1.5	
1140	7.77	660	14.0	0.9	PW-00007-050406
1155	7.78	663	13.9	1.3	~~PW-00008-050406~~
1225	7.75	621	14.2	1.3	PW-00008-050406
1312	7.75	689	14.5	0.6	
1405	7.71	700	14.8	0.7	PW-00009 050604

5/4/06

Location LIBBY-PARKER PROP. Date 5/4/06

Project / Client

[signature]

MONITOR FIELD ~~PARR.~~ PARAMETERS CH 5/4/06

0830 SPEAK W/ M. SMITH, UPDATE ON NEW pH/SC/TEMP. DATA. SMITH: APPEARS PROMISING, WANT TO CONTINUE MONITORING, ALSO CHECK SAND PRODUCTION AFTER Q INCREASED.

0835 ATTEMPT TO CALL P. LAMMERS

0855 B. TROUTMAN ON SITE

0900 NOTE: ALSO DISCUSSED PROPOSED PLAN TO RUN 12-HR CONSTANT DRAWDOWN TEST OVERNIGHT IF FINAL SAMPLE INDICATES ASBESTOS BELOW MCL. DISCUSS POTENTIAL VARIATIONS FROM SPEC (≤12 HOURS BETWEEN STEP TEST + CONST. RATE TEST, LESS FREQUENT Q MONITORING) CH 5/3/06 SMITH STATES THAT IF WATER LEVEL RECOVERS TO >95% OF STATIC, AND CONSIDERING STEADY PUMPING RATE OBSERVED + ONSITE POWER SUPPLY, THIS SHOULD BE ACCEPTABLE. SMITH TO SUMMARIZE WATER QUALITY FINDINGS AND

Location LIBBY-PARKER PROP Date 5/4/06

Project / Client

[signature]

~~POTENTIAL~~ PROPOSED VARIATIONS IN TESTING SCHEDULE IN EMAIL TO P. LAMMERS + J. MONTER CH 5/4/06

NOTE: KNUTSON, TROUTMAN AGREE W/ PROPOSAL TO RUN AQUIFER TEST (12-HR TEST) OVERNIGHT W/ FLOW MONITORING AT 4-HR INTERVALS.

0910 SETTING UP TO PULL PUMP

0925 ATTEMPT TO CONTACT T. CROWEL RE SAMPLES COMING IN TODAY, LEAVE VOICE MAIL CH 5/4/06

0940 INCREASE Q TO 19 GPM COLLECT PW-00005-050406 BEFORE SAMP.

0945 COLLECT SAMPLE PW-00006-050406

0946 TOTALIZER: 01345700

0950 NOTE: SAMPLE PW-00005-050406 COLLECTED AT 0939, SEE FIELD PARAM. LOG ON P. 67

0952 CONFIRM Q W/ BUCKET 5 GAL/15 SEC. = 20 GAL/MIN.

1000 DRAWDOWN = 7.28'

1010 SPEAK W/ P. LAMMERS. P.L. HAS ~~TO~~ CH 5/4/06 RECEIVED EMAIL FROM M. SMITH, EMAIL REPORTS

Location LIBBY-PARKER PROP. Date 5/4/06

Project / Client

INFORMATION IN 8:19, 8:30, + 9:00 ENTRIES ABOVE.
P. LAMMERS SENDING COURIER TO PICK UP SAMPLES COLLECT SO FAR TODAY. SAMPLE PW-00005-050406 TO BE SUBMITTED W/ PRIORITY REQUEST

1030 DAMON REPINE, CDM ONSITE FOR SAMPLES

1040 SPEAK W/ T. CROWELL RE SAMPLE SUBMITTAL + TURN AROUND TIMES STATE TO T. CROWELL THAT PW-00005 SAMPLE IS PRIORITY FOR ANALYSIS UNLESS IT WILL DELAY RESULTS OF FINAL STEP TEST SAMPLE UPON WHICH DECISION ~~WHETHER~~ CH 5/5/06 IS TO BE MADE TONIGHT.

1050 RELINQUISH PW-00004, PW-00005 AND PW-00006 TO D. REPINE

1053 D. REPINE OFFSITE.

1055 PULLING PUMP FROM 2003 WELL

1056 NOTE: PRESSURE TRANSDUCER AND ALL OTHER DOWNHOLE EQUIPMENT

Location LIBBY-PARKER PROP. Date 5/4/06

Project / Client

DISINFECTED PRIOR TO LOWERING INTO WELL. USING STRONG BLEACH + WATER SOLUTION, RETAIL GRADE CLOROX, 6% NaOCl. MIXED AT 1 CUP PER GALLON. MAKES HANDS SLIPPERY, HAS STRONG CHLORINE ODOR.

1140 COLLECT PW-00007 SAMPLE

1148 Q = 19 GPM

1150 INCREASE Q TO ~~35~~ 25 GPM CH 5/4/06

~~1155 COLLECT PW-00008-050406~~ CH 5/5/06

1200 MCS REPORTS 9.4' DRAWDOWN CH 5/4/06

1216 CHECK FLOW W/ BUCKET, 5 GAL/~~6~~ 12 SEC
- FLOW METER EST. IN ERROR, INC. FLOW

1219 M. PARKER ONSITE W/ LERAH + CHILD

1220 INCREASE Q TO 35 GPM

1225 COLLECT PW-00008-050406
NOTE: DISCARDED SAMPLE COLLECTED AT 1155, NEW SAMPLE COLLECTED IN NEW, CLEAN SAMPLE BOTTLE

1226 PARKERS OFFSITE

1245 SPEAK TO P. LAMMERS, SAMPLE PW-00003 HAD 1.9 MILLION FIBERS/L

Location LIBBY-PARKER PROP. Date 5/4/02

Project / Client

PHOTO LOG

TIME	NO.	SUBJECT	VIEW DIR.
1209	①	SAND PRODUCED 5/4/02 FROM 5 GPM OBTAINED W/IN 5 MIN. OF INCREASING Q TO 25 GPM.	NA
	②	SAME, DIFFERENT VIEW	NA
1928	③	1.5 HP PUMP FROM 2003 WELL	NA

5/5/02

Location LIBBY-PARKER PROP. Date 5/4/02

Project / Client

DISCUSS TESTING SCHEDULE, P.L. SUGGESTS NOT WAITING FOR LAST STEP-TEST RESULT + STARTING 12-HR TEST SOONER

1250 PARKERS ONSITE.

1305 D. REGINE ONSITE

1307 PARKERS OFFSITE

1308 4 KAMMERS FLOAT PAST OVER LAST 5 MINUTES.

1325 CHECK pH METER CALIB. pH = 7.08 w/pH 7.00 STANDARD ~~pH = 10.10 w/pH 10.01 STD~~.

1333 Q = 34 GPM

1335 NOTE: pH AT 1325 WAS 10.10 w/pH 10.01 STD.

1348 SPEAK w/ MTS RE TEST UPDATE.

1354 ~~I CALL~~ ONSITE S. OLIVERIA

1355 SPEAK w/ P. LAMMERS, DIRECTED TO START 12-HR TEST BEFORE RESULTS AVAILABLE FROM LAST SAMP.

1405 COLLECT PW-00009 SAMPLE

1407 TOTALIZER: 01352300

1408 S. OLIVERIA OFFSITE

Location LIBBY - PARKER PROP. Date 5/4/06

Project / Client

[signature]

1409 B. TROUTMAN SHUTS DOWN TEST ON DATALOGGER
1415 D. REPINE OFFSITE W/ SAMPLES.
1425 TROUTMAN, COSENS OFFSITE.
1430 SECURE SITE, LEAVE.
1520 LUNCH BREAK
1525 ARRIVE CDM LIBBY
1535 PICK UP DRINKING WATER SAMPLE BOTTLES, pH STANDARDS FROM P. KARI
1630 ATTEMPT TO DOWNLOAD STEP-TEST DATA W/ B. TROUTMAN, STYMIED BY SOFTWARE COMPATIBILITIES. REVIEW DATA MANUALLY (POCKET PC HAS READOUT) W/ M. SMITH, RATHER THAN GRAPH STEP TEST. TROUTMAN STATES HE IS SATISFIED THAT DRAWDOWN WILL NOT GO BELOW PUMP INTAKE & IS WILLING TO TAKE RESPONSIBILITY FOR PUMP.
1740 ~~1640~~ SPEAK W/ J. MONTERA, UPDATE ON SITE STATUS. ASKS FOR INFO ON PUMPS & TIE-IN

CMH 5/4/06

Location LIBBY - PARKER PROP. Date 5/4/06

Project / Client

[signature]

ISSUES. THESE TO BE UPCOMING TASKS.
1745 ~~1645~~ LEAVE FOR SITE
1750 ~~1650~~ CALL M. PARKER & LEAVE MSG. THAT SAMPLING WILL OCCUR AT 6 AM
1755 ARRIVE AT SITE, OPEN GATE
1800 COSENS & TROUTMAN ONSITE
1810 TEST PROGRAMMED
1815 TOTALIZER: 01,352,570 GAL
1824 BEGIN PUMPING. WILL RETURN
1825 CHECKING FUNCTIONALITY OF EQUIPMENT (VERIFYING)
1830 COSENS SUGGESTS MOVING PRESSURE TANK TO MAIN BLDG TO ADDRESS PRESSURE ISSUES. STATES SAND FILTER AVAILABLE FOR ~$50
1850 DISCUSS STATUS W/ P. LAMMERS
1853 Q = 29.5 GPM, HAVE BEEN ADJUSTING FLOW RATE TO ACCOMODATE FLUCTUATIONS DUE

CMH 5/4/06

CMH 5/4/06

Location LIBBY - PARKER PROP. Date 5/4/02

Project / Client

TO HEAD DROP

1915 P. LAMMERS CALLS, WILL LEAVE SAMPLE BOTTLES FOR PICKUP.

1916 COSENS, TROUTMAN OFFSITE. COSENS TO CHECK TEST AT ~21:30, TROUTMAN AT 03:30, HORN AT ~ 00:30.

1935 POLICE SITE, LOCK UP, LEAVE.

NOTES:

WEATHER TODAY: CLEAR, ~65°F (FROST IN AM) LIGHT WINDS

ALL WORK DONE IN LEVEL D PPE

~~NO DOWNTIME OR DELAYS~~ 5/4/06

APPROX ½ HR DELAY TRYING TO DOWNLOAD DATA FILE FROM STEP DRAWDOWN TEST. B. TROUTMAN TO PROVIDE DATA TO CDM AT LATER DATE.

ALL FIELD METERS AND CALIBRATION STANDARDS AS NOTED P. 45 + P. 60 RESPECTIVELY.

ANDY HORN 5/4/06

Location LIBBY - PARKER PROP Date 5/5/06

Project / Client 5000 HWY 37 N.

0025 ARRIVE AT SITE, UNLOCK GATE.

0027 DATALOGGER READS ~~8.4 [illegible]~~ 5/5/06 8.31' WATER ABOVE TRANSDUCER, 14.3°C, 3.61 PSI

TOTALIZER: 01363000

10 GAL / 19.6 SEC.

10 GAL / 21.6 SEC.

10 GAL / 20.1 SEC.

0036 DTGW = 37.87' BTOC

0040 HOOK UP 10' SECTION OF GARDEN HOSE, RUN ~1 GAL THROUGH IT, ARRANGE IN MANNER THAT WILL KEEP HOSE FULL & ALLOW HOSE TO BE CONDITIONED TO WATER. HOSE ATTACHED TO SAMPLE PORT, WILL BE USED TO FILL BOTTLES FOR DW SAMPLES.

0045 DISCONNECT + DRAIN HOSE DUE TO SUB-FREEZING TEMPS.

Location LB34 - Parker Prop Date 5/5/06

Project / Client

WATER LEVELS

0032 37.87' BTOC Q=30 GPM

0640 37.85' BTOC Q=29 GPM

0641 21.98' BTOC OLD 2003 WELL

0904 37.83' BTOC Q=30GPM

5/5/06

Location LB34 - Parker Prop Date 5/5/06

Project / Client

0949 TOTALIZER 01363600

0952 SECURE SITE.

NOTE: E. COSENS ONSITE AT 2100 5/4/06

DTGW = 37' 8" BTOC AT 2108

29 GPM @ 2113

TOTALIZER 01357400 @ 2115

SITE SECURE ON ENTRY + EXIT. DATA FROM NOTES LEFT W/ KEN. KEN LEFT W/ MOTEL CLERK.

0958 LEAVE SITE. SITE SECURED

0615 ARRIVE AT SITE, UNLOCK GATE. E. COSENS ONSITE

0619 TOTALIZER 01373155

0620 HEALTH + SAFETY MTG. TOPIC GEN SITE SAFETY. PRESENT: A. HERN, CDM E. COSENS, O'KEEFE

0625 CHECK pH METER CALIB.

pH = 7.09 w/ pH 7.00 STD

pH = 10.16 w/ pH 10.00 STD

Location LIBBY-PARKER PROP. Date 5/5/06

Project / Client

[signature]

~~0721~~ 0626 B. TRUNTMAN ONSITE, REVIEW
CMH 5/5/06 SAFETY BRIEFING.
~~0722~~ 0627 Q = 29 GPM
TURBIDITY: 0.90 w/ 1 NTU STD
" = 10 NTU w/ 10 NTU STD
0655 SETTING UP TO SAMPLE, M. PARKER STILL NOT ONSITE
0710 CALL PARKER'S HOME AND CELL PHONES, NO ANSWER, CHECK RESIDENCE PH. # w/ DIR. ASST., CORRECT, STILL NO ANSWER. MESSAGES LEFT AT BOTH
0715 M. PARKER ONSITE
0716 BEGIN ABANDONING OLD WELL w/ PURE GOLD BENTONITE CHIPS
0725 CHECK SPECIFIC CONDUCTANCE CALIB. 1344 µMhos/cm w/ 1413 µMhos/cm STD
0740 NOTE: VOC ANALYSIS (524.1) BOTTLES HAVE ASCORBIC ACID POWDER IN BOTTLES. ~~TH~~ CMH 5/5/06 ~~DRICK~~ CMH 5/5/06 DIRECTIONS INDICATE ASCORBIC ACID FOR CHLORINATED WATER. WILL RINSE OUT ASCORBIC ACID WITH ~~DIST~~ CMH 5/5/06 DI WATER

Location LIBBY - PARKER PROP. Date 5/5/06

Project / Client

[signature]

(w/ QUADRUPLE RINSE), ACIDIFY w/ HCL ACCORDING TO DIRECTIONS AND COLLECT SAMPLES.
→ SAMPLES TO BE PRESERVED AS INDICATED ON BOTTLE ORDER SHEET, BOTTLE ORDER # 16009, QUOTE ID 1106
0755 SAMPLES TO BE CDM SOP 1-9, TAP WATER SAMPLING. TAP IS SPIGOT ON WELL DISCHARGE LINE.
0810 MR. PARKER COLLECTS SAMPLES IN 2 1-GAL PLASTIC HDPE JUGS WHICH PREVIOUSLY CONTAINED DISTILLED WATER. SAMPLES HAVE MINIMAL HEADSPACE.
0811 PARKER AT OUTBUILDING
0815 PARKER OFFSITE
0820 COLLECTING PW-00010
0822 M. CIRIAN ONSITE
0840 FINISH COLLECTING PW-00010 w/ FINAL ASBESTOS SAMPLE

Location LIBBY-PARKER PROP Date 5/5/06

Project / Client

[signature]

CMH 5/4/06 FOR LOCAL ONSITE ANALYSIS

~~0744~~	pH (SU)	SC ~~COND~~ (µMhos/cm)	TURB (NTU)	TEMP (°C)
0845	7.72	726	0.60	13.1

0908 SHUT DOWN PUMP
DEVELOPMENT + TESTING
PUMP IS MEYERS RANGER
SERIES 1 HP 30 GPM PUMP
INTAKE AT 46' BGS, TRANSDUCER
AT 44' BGS
FINAL TOTALIZER: 01378015
PUMP FROM ORIGINAL (2003 WELL)
IS 1.5 HP GRUNDFOS PUMP
W/ FRANKLIN ELECTRIC MOTOR
MODEL 2443099004
230 VOLT, 10.6 AMP 1.1 KW
3450 RPM, CONTINUOUS DUTY E79319

0915 NOTE: ALL INTERACTIONS W/
PARKERS DURING WELL INSTALLATION,
DEVELOPMENT, TESTING + SAMPLING
HAVE BEEN VERY POSITIVE.
AT ~1300 5/4/06, UPON SEEING
WATER PRODUCED FROM WELL,

NOTE: CIRIAN OFFSITE APPROX 0930 CMH 5/5/06

Location LIBBY - PARKER PROP Date 5/5/06

Project / Client

[signature]

MRS. PARKER STATED "OUR
PRAYERS HAVE BEEN ANSWERED"

0920 DISCUSS PUMPS + CHLORINATION
W/ M. CIRIAN, AND MCS
STAFF. AGREE TO WAIT FOR
WELL DISINFECTION UNTIL
PUMP IS INSTALLED + DO W/
CHLORINATION OF ALL
POTABLE WATER LINES.

0935 SPEAK W/ P. LAMMERS. ~~WILL~~
~~LE~~ ~~FCMH~~ 5/5/06
UPDATE ON STATUS. WILL
LEAVE SITE KEY W/ MCS,
BRING SAMPLES TO LAB.

0945 GIVE KEY TO MCS (TROUTMAN)
NOTE AT 0323
TOTALIZER: 01368190
29 GPM
DTGW = 37'11" BTOC
TROUTMAN OFFSITE AT 0333

0950 OFFSITE

1000 ARRIVE CDM LIBBY. PROVIDE
FULL SET OF SAMPLE
PW-00010 TO P. KARI, CDM

Location LIBBY - PARKER PROP. Date 5/5/06

Project / Client

NOTE: pH 7.00 STANDARD USED TODAY IS FROM LOT # 2507093, EXP 06/07. pH 10.00 STD. FROM LOT #2504111, EXP 10/08. PROVIDED BY PINE ENVIRONMENTAL. ALL SAMPLES COLLECTED AND PRESERVED ACCORDING TO LIST ON BOTTLE ORDER. ALL SAMPLES ICED IMMEDIATELY. NOTE: SAMPLING PW-00010 HAD TECHNICALLY BEGUN AND WAS IN PROGRESS WHEN M. PARKER'S SAMPLE WAS COLLECTED.

1035 UPDATE S. MONTERA ON STATUS W/ P. LAMMERS

1100 TRUNTMAN CALLS, GAVE KEY TO S. OLIVERIA, SITE CLEANED

1115 LEAVE CDM LIBBY

NOTES: ALL SAMPLES BUT VOC (MTP 524) COLLECTED VIA 10' GARDEN HOSE ATTACHED TO SAMPLE SPIGOT. HOSE ALLOWED TO BE CONDITIONED W/ FORMATION WATER PRIOR TO SAMPLING. VOC

Location LIBBY - PARKER PROP. Date 5/5/06

Project / Client

SAMPLES COLLECTED DIRECTLY FROM SPIGOT AFTER ALLOWING TO RUN. VOC SAMPLES COLLECTED IN A MANNER TO MINIMIZE AERATION.

→ ALL SAMPLES ICED IMMEDIATELY AFTER COLLECTION.

→ ALL WORK DONE IN LEVEL D PPE.

→ WEATHER TODAY: CLEAR, CALM, 55°-60°F

ALL INSTRUMENTS FOR FIELD ANALYSIS AS STATED ON P. 45

SAMPLE SHIPMENT TO BE DONE BY CDM LIBBY SAMPLE COORDINATOR (P. KARI).

NOTE: BENTONITE CHIPS ADDED TO OLD WELL FOR ABANDONMENT. CHIPS TO 10' BGS

Andy Horn 5/5/06

5/5/06

Appendix F

Photographs

Well site before drilling

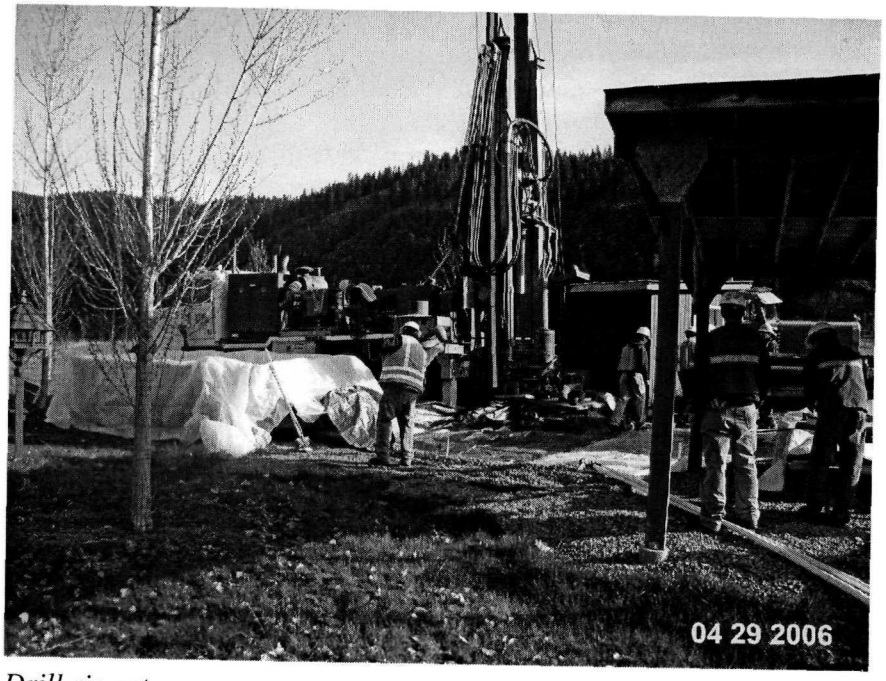

Drill rig set-up

Well drilling in progress

Installing stainless steel well screen

Landscape damage due to stuck drill rig

Well water after development

Final well completion and reclamation