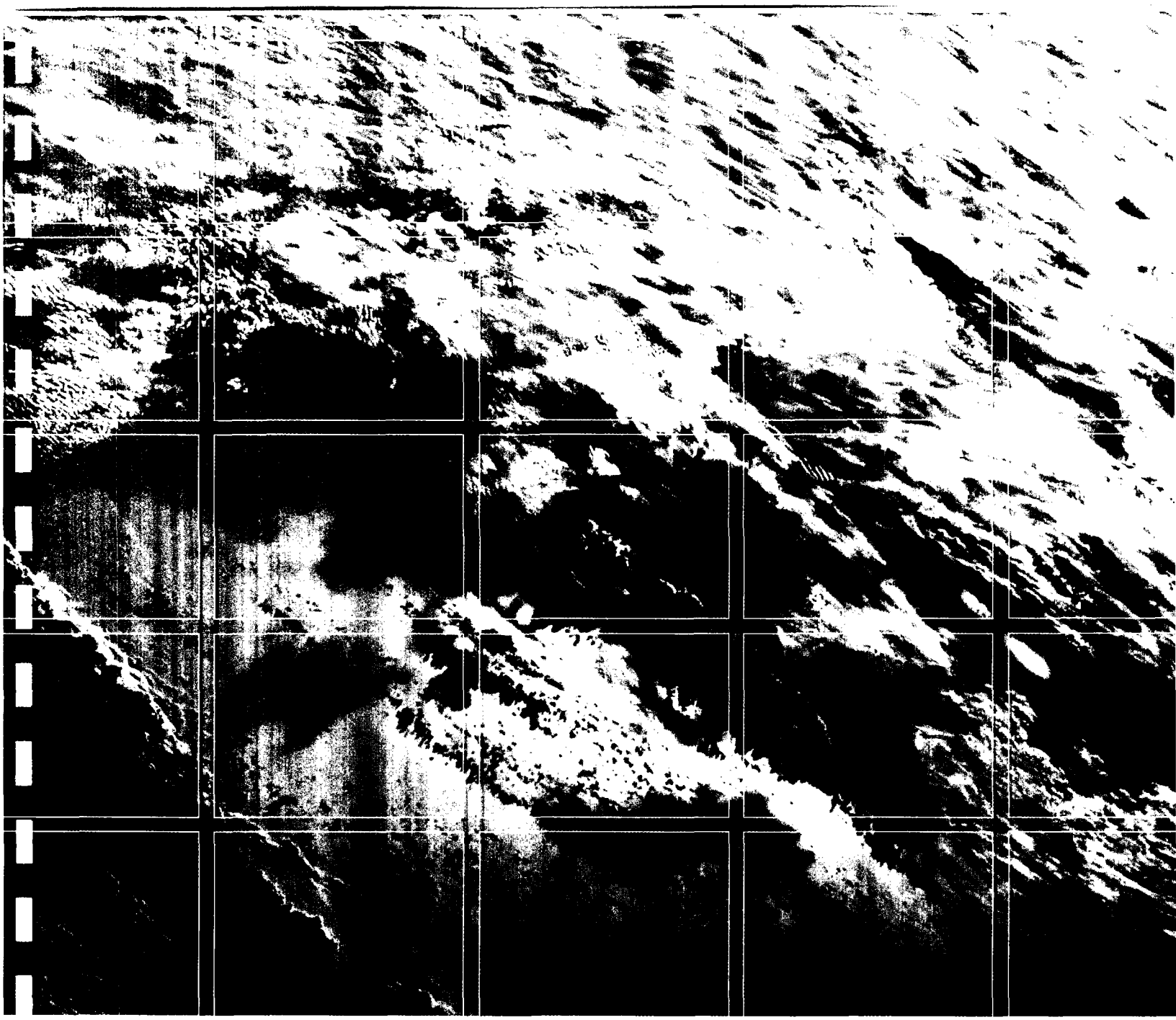

NTER
FILE DOC
OTHER

Annual Report of Status of Remediation

80 Pickett District Road
New Milford, Connecticut

January 2006

www.erm.com

RDMS DocID 104506

ERM

Delivering sustainable solutions in a more competitive world

Annual Report of Status of Remediation

80 Pickett District Road
New Milford, Connecticut

January 2006

Prepared for:

CEE Associates Limited Partnership
c/o Corillian Corporation
3400 NW John Olsen Place
Hillsboro, OR 97124

W.O. # 0016718

Kevin P. King, LEP
Principal-in-Charge

Robert Drake, Ph.D., LEP, PE
Senior Project Manager

Jason Fernet
Project Engineer

Prepared By:

Environmental Resources Management
77 Hartland Street, Suite 300
East Hartford, Connecticut 06108
T: 860-466-8500
F: 860-466-8501

TABLE OF CONTENTS

1.0 INTRODUCTION *1-1*

1.1 PURPOSE AND SCOPE *1-1*

1.2 SITE SUMMARY *1-1*

1.3 APPLICABLE CRITERIA *1-2*

1.4 ABBREVIATIONS *1-3*

2.0 SUMMARY OF SITE ACTIVITIES *2-1*

2.1 AOC-4 (FORMER HAZARDOUS WASTE STORAGE AREA), AOC-5 (FORMER PLATING AREA), AOC-7 (SITE GROUNDWATER), AND AOC-9 (STORMWATER VAULT) *2-1*

2.1.1 Additional Data Collection *2-1*

2.1.2 Remedial Efforts *2-2*

2.2 OTHER ISSUES *2-3*

3.0 ANTICIPATED ACTIVITIES IN THE NEXT YEAR *3-1*

LIST OF APPENDICIES

APPENDIX A: *Laboratory Data Sheets*

APPENDIX B: *AS/SVE Remedial Design*

APPENDIX C: *Air Discharge Analysis*

APPENDIX D : *Figures*

1.0 INTRODUCTION

1.1 PURPOSE AND SCOPE

This Annual Report has been prepared to describe the efforts performed from September 2004 to October 2005 to address historic releases detected on and off the facility located at 80 Pickett District Road in New Milford, Connecticut (the "Site", see Figure 1). The purpose of this report is to:

- Describe the efforts undertaken to advance the remedial program on the Site during the annual period; and
- Describe the efforts anticipated to be accomplished during the next annual period.

1.2 SITE SUMMARY

The Site consists of a single story building located on approximately an eight-acre parcel on Pickett District Road in New Milford, Connecticut (See Figure 1). The majority of the Site is covered by the building and paved parking areas located on the northern and southern ends of the building. The property is bordered by Kimberly Clark Corporation to the north and west, the Neeltran, Inc. facility to the east, and the New Milford Animal Welfare facility to the south. The Housatonic River is the nearest surface water body located approximately 800 feet to the west of the Site.

The Site was undeveloped land until 1963 when the current Site building was constructed. From 1964 until 1983, the Site was owned and occupied by Burndy Corporation (Burndy), which conducted a metal plating operation. Burndy operated a RCRA-regulated surface impoundment for plating wastewater disposal. This unit (along with associated sludge drying beds) was "clean closed" under a CT DEP approval closure plan in the late 1980s.

In 1983, the Site was purchased by CEE Associates, Limited Partnership (CEE). A number of tenants occupied the Site under CEE's ownership. From 1983 until 1993 the Site was operated as an electroplating and dry film processing facility by Diventco Corporation, and as a telephone equipment

repair service by Colonial Data Services Corporation. In addition, the parent company of CEE, InteliData Technologies Corporation (InteliData), used the Site from 1996 until 1999 for warehousing, assembly, and distribution of electronic communication products. The resulting Contaminants of Concern (COCs) associated with operations conducted prior to 1996 include chlorinated and non-chlorinated volatile organic compounds (VOCs), petroleum related SVOCs, PCBs, petroleum hydrocarbons (TPH), and certain metals.

In response to the CT DEP's Post-Closure Part B Permit call, in December 1998, a Post-Closure Part B Permit Application was prepared by ERM on behalf of InteliData and submitted to the CT DEP and EPA. The Post-Closure Part B Permit Application indicated that no further work was necessary at the Site as "Clean Closure" of the RCRA unit (along with associated sludge drying beds) had been achieved.

It should be noted that neither CEE as the owner of the Site nor InteliData as a tenant conducted operations at the facility which could result in the release of hazardous materials or substances.

On January 6, 2000 CEE sold the Site to Edelman Limited Partnership ("Edelman"). Pursuant to the Connecticut Transfer Act (CTA), CEE signed the Form III as the certifying party for the Site.

On or about August 19, 2005, five (5) years after CEE sold the Site to Edelman, InteliData was acquired by Corillian Corporation.

1.3 *APPLICABLE CRITERIA*

The Site is located in an area classified by the CT DEP as a "GB" groundwater area, meaning that groundwater may not be suitable for human consumption without treatment due to waste discharges, spills or leaks of chemicals or industrial land use impacts. Additionally, the Site is located within a commercially zoned area. Consistent with the zoning requirements and a private contractual agreement between CEE and the current Site owner, Edelman, the use of the Site should be consistent with commercial/industrial

activities as defined under the RSRs.

Considering these overall characteristics of the Site, the following RSR criteria are applicable to the Site characterization and remediation efforts:

- Site soils will be evaluated under the Pollutant Mobility Criteria for GB areas (GB PMC), and Residential Direct Exposure Criteria (RDEC) with Industrial/Commercial Direct Exposure Criteria (I/C DEC) possible in specific circumstances; and

- Site groundwater will be evaluated under the Residential and Industrial/Commercial Volatilization Criteria (RVC and I/C VC) and the Surface Water Protection Criteria (SWPC). These criteria apply to any portion of the impacted groundwater, including those portions (if any) which may extend off-site.

Because the efforts presented in this Work Plan need to satisfy the requirements of the RSRs, the evaluation of existing data and the development of the scope of work has been prepared based on the CT DEP's *Draft Site Characterization Guidance Document*. The scientific process described in CT DEP's Conceptual Site Model (CSM) process was followed in the development of the scope of work for this Site.

1.4 *ABBREVIATIONS*

The following abbreviations are used throughout this document:

AOC	Area of Concern
CGS	Connecticut General Statutes
COC	Contaminant of Concern
CSM	Conceptual Site Model
CTA	Connecticut Transfer Act
CT DEP	Connecticut Department of Environmental Protection
DNAPL	Dense Non-aqueous Phase Liquid
ELUR	Environmental Land Use Restriction
EPA	United States Environmental Protection Agency

ETPH	Extractable Total Petroleum Hydrocarbons
gpm	gallons per minute
GWPC	Groundwater Protection Criteria
I/C DEC	Industrial/Commercial Direct Exposure Criteria
I/C VC	Industrial/Commercial Volatilization Criteria
LEP	Licensed Environmental Professional
NA	Natural Attenuation
NAPL	Non-aqueous Phase Liquid
PCBs	Polychlorinated Biphenyls
PCE	Tetrachloroethylene
PID	Photo-ionization Detector
PMC	Pollutant Mobility Criteria
ppm	parts per million
RAP	Remedial Action Plan
RCRA	Resource Conservation and Recovery Act
RDEC	Residential Direct Exposure Criteria
RCSA	Regulations of Connecticut State Agencies
RSRs	Connecticut Remediation Standard Regulations
RVC	Residential Volatilization Criteria
SPLP	Synthetic Precipitation Leaching Procedure
SVE	Soil Vapor Extraction
SWPC	Surface Water Protection Criteria
TCE	Trichloroethylene
TPH	Total Petroleum Hydrocarbons
µg/kg	micrograms per kilogram
µg/L	micrograms per liter
VOCs	Volatile Organic Compounds
1,1-DCE	1,1-dichloroethene
1,1-DCA	1,1-dichloroethane
1,2-DCE	1,2-dichloroethene

2.0 *SUMMARY OF SITE ACTIVITIES*

Efforts during the past year focused primarily on closing the data gaps identified in the previous annual report, including, but not limited to the following critical items:

- Preparation of an Engineering Design for the treatment of soil, soil vapor, and groundwater affected by VOCs;
- Selection of a Contractor to implement the Remedial Design; and
- Initiation of remedial construction on the Site.

2.1 *AOC-4 (FORMER HAZARDOUS WASTE STORAGE AREA), AOC-5 (FORMER PLATING AREA), AOC-7 (SITE GROUNDWATER), AND AOC-9 (STORMWATER VAULT)*

Figure 2 presents the location of specific AOCs on the Site. As can be seen from Figure 2, AOCs-4, -5, and -9 are essentially contiguous, and have been combined for purposes of the remedial design. The remediation system being installed at the Site will address releases from all of these AOCs, as well as the affected areas of AOC-7 (Site Groundwater).

2.1.1 *Additional Data Collection*

During the installation of the full-scale Soil Vapor Extraction (SVE) system at the Site, soil samples were collected via split spoon sampler in September from beneath the floor slab at the SVE extraction well points (See Figure 2). As part of the remedial evaluation process, these samples were analyzed for VOCs using EPA Method 8260. The results are included on Table 1 and indicate the following:

- PCE, TCE, and 111-TCA were the only constituents detected; and
- No concentration of VOCs was found above GB PMC or RDEC.

The detection of these VOCs and their distribution correlate well with the layout of the planned remedial system.

Laboratory data sheets are included in Appendix A.

2.1.2 *Remedial Efforts*

In November 2004, following an evaluation of the pilot study performed in 2004, ERM prepared the remedial design for the combined AS/SVE system (see Appendix B). The system has the following features:

- A total of seventeen (17) air sparge points, with nine (9) located beneath the building and the rest along the exterior;
- A "sparge wall" consisting of three (3) overlapping sparge points set near the property boundary at the point where the plume leaves the property; and
- Seven (7) overlapping SVE points located beneath the building.

Critical source removal aspects of the treatment system include:

- Sparge points located along the axis of the VOC plume along the south side of the building;
- The "sparge wall" set to minimize off-site transport of VOCs; and
- Sparge points/ SVE wells concentrated at the most critical locations beneath the building, as identified by soil vapor and groundwater analyses.

At this time, the system does not appear to require off-gas treatment prior to discharge. ERM performed an analysis of Hazardous Air Pollutants (HAPs) loading and Maximum Allowable Stack Concentration (MASC) for the critical VOC parameters observed in the soil vapor. This analysis (Appendix C) indicates that neither the trigger for HAPs or MASC was reached under worst case conditions. Should data collected during system operations suggest that either of these limits have been exceeded, ERM will implement an appropriate off-gas treatment system (activated carbon or equal).

To date, the SVE and sparge points have been installed, and the remaining

equipment and piping have been ordered.

2.2 *OTHER ISSUES*

To further assist in the evaluation of Site conditions on the property, ERM has prepared cross-sections of critical areas on the Site, included as Figure 3. These cross-sections clearly show the significant increase in depth to bedrock on the southern portions of the Site.

.

3.0 *ANTICIPATED ACTIVITIES IN THE NEXT YEAR*

During the next program year, the following activities are anticipated:

- Completion of the AS/SVE system;
- Start-up and operation of the remedial system; and
- Semi-annual groundwater and soil vapor monitoring to assess the progress of the remedial program.

APPENDIX A

Report Date:
30-Sep-05 12:27

☑ Final Report

SPECTRUM ANALYTICAL, INC.
Featuring
HANIBAL TECHNOLOGY

Laboratory Report

Environmental Resources Management
146 Wyllys Street, Suite 300
Hartford, CT 06106
Attn: Robert Drake

Project: Intelidata - New Milford, CT
Project #: 037300

Laboratory ID	Client Sample ID	Matrix	Date Sampled	Date Received
SA34531-01	SVE-5 (6')	Soil	15-Sep-05 11:45	19-Sep-05 13:56
SA34531-02	SVE-7 (5')	Soil	16-Sep-05 13:30	19-Sep-05 13:56
SA34531-03	SVE-3 (7')	Soil	16-Sep-05 11:15	19-Sep-05 13:56
SA34531-04	SVE-6 (5')	Soil	16-Sep-05 10:00	19-Sep-05 13:56
SA34531-05	SVE-4 (3-4')	Soil	15-Sep-05 11:02	19-Sep-05 13:56

I attest that the information contained within the report has been reviewed for accuracy and checked against the quality control requirements for each method. All applicable NELAC requirements have been met.
Please note that this report contains 18 pages of analytical data including Chain of Custody document(s).
This report may not be reproduced, except in full, without written approval from Spectrum Analytical, Inc.

Massachusetts Certification # M-MA138/MA1110
Connecticut # PH-0777
Florida # E87600/E87936
Maine # MA138
New Hampshire # 2538/2972
New York # 11393/11840
Rhode Island # 98
USDA # S-51435
Vermont # VT-11393

ACCREDITED IN ACCORDANCE WITH

Authorized by:

Hanibal C. Tayeh, Ph.D.
President/Laboratory Director

Spectrum Analytical, Inc. is a NELAC accredited laboratory organization and meets NELAC testing standards. Use of the NELAC logo however does not insure that Spectrum is currently accredited for the specific method indicated. Please refer to our "Quality" webpage at www.spectrum-analytical.com for a full listing of our current certifications.

Sample Identification	Client Project #	Matrix	Collection Date/Time	Received
SVE-5 (6') SA34531-01	037300	Soil	15-Sep-05 11:45	19-Sep-05

CAS No.	*Analyte(s)*	*Result*	**RDL/Units*	*Dilution*	*Method Ref.*	*Prepared*	*Analyzed*	*Batch*	*Analyst*	*Flag*
Volatile Organic Compounds										
	VOC Extraction	Field extracted	N/A	1	VOC	22-Sep-05	22-Sep-05	5091566	BD	
Volatile Organic Compounds by SW846 8260B			Prepared by method	SW846 5035A Soil (low level)						
67-64-1	Acetone	130	94.6 µg/kg dry	1	SW846 8260B	23-Sep-05	24-Sep-05	5091614	tim	VOC6
107-13-1	Acrylonitrile	BRL	4.7 µg/kg dry	1	"	"	"	"	"	
71-43-2	Benzene	BRL	4.7 µg/kg dry	1	"	"	"	"	"	
108-86-1	Bromobenzene	BRL	4.7 µg/kg dry	1	"	"	"	"	"	
74-97-5	Bromochloromethane	BRL	4.7 µg/kg dry	1	"	"	"	"	"	
75-27-4	Bromodichloromethane	BRL	4.7 µg/kg dry	1	"	"	"	"	"	
75-25-2	Bromoform	BRL	4.7 µg/kg dry	1	"	"	"	"	"	
74-83-9	Bromomethane	BRL	9.5 µg/kg dry	1	"	"	"	"	"	
78-93-3	2-Butanone (MEK)	BRL	47.3 µg/kg dry	1	"	"	"	"	"	
104-51-8	n-Butylbenzene	BRL	4.7 µg/kg dry	1	"	"	"	"	"	
135-98-8	sec-Butylbenzene	BRL	4.7 µg/kg dry	1	"	"	"	"	"	
98-06-6	tert-Butylbenzene	BRL	4.7 µg/kg dry	1	"	"	"	"	"	
75-15-0	Carbon disulfide	BRL	23.6 µg/kg dry	1	"	"	"	"	"	
56-23-5	Carbon tetrachloride	BRL	4.7 µg/kg dry	1	"	"	"	"	"	
108-90-7	Chlorobenzene	BRL	4.7 µg/kg dry	1	"	"	"	"	"	
75-00-3	Chloroethane	BRL	9.5 µg/kg dry	1	"	"	"	"	"	
67-66-3	Chloroform	BRL	4.7 µg/kg dry	1	"	"	"	"	"	
74-87-3	Chloromethane	BRL	9.5 µg/kg dry	1	"	"	"	"	"	
95-49-8	2-Chlorotoluene	BRL	4.7 µg/kg dry	1	"	"	"	"	"	
106-43-4	4-Chlorotoluene	BRL	4.7 µg/kg dry	1	"	"	"	"	"	
96-12-8	1,2-Dibromo-3-chloropropane	BRL	9.5 µg/kg dry	1	"	"	"	"	"	
124-48-1	Dibromochloromethane	BRL	4.7 µg/kg dry	1	"	"	"	"	"	
106-93-4	1,2-Dibromoethane (EDB)	BRL	4.7 µg/kg dry	1	"	"	"	"	"	
74-95-3	Dibromomethane	BRL	4.7 µg/kg dry	1	"	"	"	"	"	
95-50-1	1,2-Dichlorobenzene	BRL	4.7 µg/kg dry	1	"	"	"	"	"	
541-73-1	1,3-Dichlorobenzene	BRL	4.7 µg/kg dry	1	"	"	"	"	"	
106-46-7	1,4-Dichlorobenzene	BRL	4.7 µg/kg dry	1	"	"	"	"	"	
75-71-8	Dichlorodifluoromethane (Freon12)	BRL	9.5 µg/kg dry	1	"	"	"	"	"	
75-34-3	1,1-Dichloroethane	BRL	4.7 µg/kg dry	1	"	"	"	"	"	
107-06-2	1,2-Dichloroethane	BRL	4.7 µg/kg dry	1	"	"	"	"	"	
75-35-4	1,1-Dichloroethene	BRL	4.7 µg/kg dry	1	"	"	"	"	"	
156-59-2	cis-1,2-Dichloroethene	BRL	4.7 µg/kg dry	1	"	"	"	"	"	
156-60-5	trans-1,2-Dichloroethene	BRL	4.7 µg/kg dry	1	"	"	"	"	"	
78-87-5	1,2-Dichloropropane	BRL	4.7 µg/kg dry	1	"	"	"	"	"	
142-28-9	1,3-Dichloropropane	BRL	4.7 µg/kg dry	1	"	"	"	"	"	
594-20-7	2,2-Dichloropropane	BRL	4.7 µg/kg dry	1	"	"	"	"	"	
563-58-6	1,1-Dichloropropene	BRL	4.7 µg/kg dry	1	"	"	"	"	"	
10061-01-5	cis-1,3-Dichloropropene	BRL	4.7 µg/kg dry	1	"	"	"	"	"	
10061-02-6	trans-1,3-Dichloropropene	BRL	4.7 µg/kg dry	1	"	"	"	"	"	
100-41-4	Ethylbenzene	BRL	4.7 µg/kg dry	1	"	"	"	"	"	
87-68-3	Hexachlorobutadiene	BRL	4.7 µg/kg dry	1	"	"	"	"	"	
591-78-6	2-Hexanone (MBK)	BRL	47.3 µg/kg dry	1	"	"	"	"	"	
98-82-8	Isopropylbenzene	BRL	4.7 µg/kg dry	1	"	"	"	"	"	
99-87-6	4-Isopropyltoluene	BRL	4.7 µg/kg dry	1	"	"	"	"	"	

Sample Identification	Client Project #	Matrix	Collection Date/Time	Received
SVE-5 (6') SA34531-01	037300	Soil	15-Sep-05 11:45	19-Sep-05

CAS No.	*Analyte(s)*	*Result*	**RDL/Units*	*Dilution*	*Method Ref.*	*Prepared*	*Analyzed*	*Batch*	*Analyst*	*Flag*
Volatile Organic Compounds										
Volatile Organic Compounds by SW846 8260B			Prepared by method	SW846 5035A Soil (low level)						
1634-04-4	Methyl tert-butyl ether	BRL	4.7 µg/kg dry	1	SW846 8260B	23-Sep-05	24-Sep-05	5091614	tim	
108-10-1	4-Methyl-2-pentanone (MIBK)	BRL	47.3 µg/kg dry	1	"	"	"	"	"	
75-09-2	Methylene chloride	BRL	47.3 µg/kg dry	1	"	"	"	"	"	
91-20-3	Naphthalene	BRL	4.7 µg/kg dry	1	"	"	"	"	"	
103-65-1	n-Propylbenzene	BRL	4.7 µg/kg dry	1	"	"	"	"	"	
100-42-5	Styrene	BRL	4.7 µg/kg dry	1	"	"	"	"	"	
630-20-6	1,1,1,2-Tetrachloroethane	BRL	4.7 µg/kg dry	1	"	"	"	"	"	
79-34-5	1,1,2,2-Tetrachloroethane	BRL	4.7 µg/kg dry	1	"	"	"	"	"	
127-18-4	Tetrachloroethene	9.1	4.7 µg/kg dry	1	"	"	"	"	"	
108-88-3	Toluene	BRL	4.7 µg/kg dry	1	"	"	"	"	"	
87-61-6	1,2,3-Trichlorobenzene	BRL	4.7 µg/kg dry	1	"	"	"	"	"	
120-82-1	1,2,4-Trichlorobenzene	BRL	4.7 µg/kg dry	1	"	"	"	"	"	
71-55-6	1,1,1-Trichloroethane	129	4.7 µg/kg dry	1	"	"	"	"	"	
79-00-5	1,1,2-Trichloroethane	BRL	4.7 µg/kg dry	1	"	"	"	"	"	
79-01-6	Trichloroethene	10.8	4.7 µg/kg dry	1	"	"	"	"	"	
75-69-4	Trichlorofluoromethane (Freon 11)	BRL	4.7 µg/kg dry	1	"	"	"	"	"	
96-18-4	1,2,3-Trichloropropane	BRL	4.7 µg/kg dry	1	"	"	"	"	"	
95-63-6	1,2,4-Trimethylbenzene	BRL	4.7 µg/kg dry	1	"	"	"	"	"	
108-67-8	1,3,5-Trimethylbenzene	BRL	4.7 µg/kg dry	1	"	"	"	"	"	
75-01-4	Vinyl chloride	BRL	4.7 µg/kg dry	1	"	"	"	"	"	
1330-20-7	m,p-Xylene	BRL	9.5 µg/kg dry	1	"	"	"	"	"	
95-47-6	o-Xylene	BRL	4.7 µg/kg dry	1	"	"	"	"	"	
Surrogate recoveries:										
460-00-4	*4-Bromofluorobenzene*	*101*	*70-130 %*		"	"	"	"	"	
2037-26-5	*Toluene-d8*	*100*	*70-130 %*		"	"	"	"	"	
17060-07-0	*1,2-Dichloroethane-d4*	*122*	*70-130 %*		"	"	"	"	"	
1868-53-7	*Dibromofluoromethane*	*105*	*70-130 %*		"	"	"	"	"	
General Chemistry Parameters										
	% Solids	94.5	%	1	SM2540 G Mod.	27-Sep-05	27-Sep-05	5091833	YM	

Sample Identification	Client Project #	Matrix	Collection Date/Time	Received
SVE-7 (5') SA34531-02	037300	Soil	16-Sep-05 13:30	19-Sep-05

CAS No.	*Analyte(s)*	*Result*	**RDL/Units*	*Dilution*	*Method Ref.*	*Prepared*	*Analyzed*	*Batch*	*Analyst*	*Flag*
Volatile Organic Compounds										
	VOC Extraction	Field extracted	N/A	1	VOC	22-Sep-05	22-Sep-05	5091566	BD	
Volatile Organic Compounds by SW846 8260B			Prepared by method	SW846 5035A Soil (low level)						
67-64-1	Acetone	163	117 µg/kg dry	1	SW846 8260B	23-Sep-05	24-Sep-05	5091614	tim	VOC6
107-13-1	Acrylonitrile	BRL	5.8 µg/kg dry	1	"	"	"	"	"	
71-43-2	Benzene	BRL	5.8 µg/kg dry	1	"	"	"	"	"	
108-86-1	Bromobenzene	BRL	5.8 µg/kg dry	1	"	"	"	"	"	
74-97-5	Bromochloromethane	BRL	5.8 µg/kg dry	1	"	"	"	"	"	
75-27-4	Bromodichloromethane	BRL	5.8 µg/kg dry	1	"	"	"	"	"	
75-25-2	Bromoform	BRL	5.8 µg/kg dry	1	"	"	"	"	"	
74-83-9	Bromomethane	BRL	11.7 µg/kg dry	1	"	"	"	"	"	
78-93-3	2-Butanone (MEK)	BRL	58.3 µg/kg dry	1	"	"	"	"	"	
104-51-8	n-Butylbenzene	BRL	5.8 µg/kg dry	1	"	"	"	"	"	
135-98-8	sec-Butylbenzene	BRL	5.8 µg/kg dry	1	"	"	"	"	"	
98-06-6	tert-Butylbenzene	BRL	5.8 µg/kg dry	1	"	"	"	"	"	
75-15-0	Carbon disulfide	BRL	29.1 µg/kg dry	1	"	"	"	"	"	
56-23-5	Carbon tetrachloride	BRL	5.8 µg/kg dry	1	"	"	"	"	"	
108-90-7	Chlorobenzene	BRL	5.8 µg/kg dry	1	"	"	"	"	"	
75-00-3	Chloroethane	BRL	11.7 µg/kg dry	1	"	"	"	"	"	
67-66-3	Chloroform	BRL	5.8 µg/kg dry	1	"	"	"	"	"	
74-87-3	Chloromethane	BRL	11.7 µg/kg dry	1	"	"	"	"	"	
95-49-8	2-Chlorotoluene	BRL	5.8 µg/kg dry	1	"	"	"	"	"	
106-43-4	4-Chlorotoluene	BRL	5.8 µg/kg dry	1	"	"	"	"	"	
96-12-8	1,2-Dibromo-3-chloropropane	BRL	11.7 µg/kg dry	1	"	"	"	"	"	
124-48-1	Dibromochloromethane	BRL	5.8 µg/kg dry	1	"	"	"	"	"	
106-93-4	1,2-Dibromoethane (EDB)	BRL	5.8 µg/kg dry	1	"	"	"	"	"	
74-95-3	Dibromomethane	BRL	5.8 µg/kg dry	1	"	"	"	"	"	
95-50-1	1,2-Dichlorobenzene	BRL	5.8 µg/kg dry	1	"	"	"	"	"	
541-73-1	1,3-Dichlorobenzene	BRL	5.8 µg/kg dry	1	"	"	"	"	"	
106-46-7	1,4-Dichlorobenzene	BRL	5.8 µg/kg dry	1	"	"	"	"	"	
75-71-8	Dichlorodifluoromethane (Freon12)	BRL	11.7 µg/kg dry	1	"	"	"	"	"	
75-34-3	1,1-Dichloroethane	BRL	5.8 µg/kg dry	1	"	"	"	"	"	
107-06-2	1,2-Dichloroethane	BRL	5.8 µg/kg dry	1	"	"	"	"	"	
75-35-4	1,1-Dichloroethene	BRL	5.8 µg/kg dry	1	"	"	"	"	"	
156-59-2	cis-1,2-Dichloroethene	BRL	5.8 µg/kg dry	1	"	"	"	"	"	
156-60-5	trans-1,2-Dichloroethene	BRL	5.8 µg/kg dry	1	"	"	"	"	"	
78-87-5	1,2-Dichloropropane	BRL	5.8 µg/kg dry	1	"	"	"	"	"	
142-28-9	1,3-Dichloropropane	BRL	5.8 µg/kg dry	1	"	"	"	"	"	
594-20-7	2,2-Dichloropropane	BRL	5.8 µg/kg dry	1	"	"	"	"	"	
563-58-6	1,1-Dichloropropene	BRL	5.8 µg/kg dry	1	"	"	"	"	"	
10061-01-5	cis-1,3-Dichloropropene	BRL	5.8 µg/kg dry	1	"	"	"	"	"	
10061-02-6	trans-1,3-Dichloropropene	BRL	5.8 µg/kg dry	1	"	"	"	"	"	
100-41-4	Ethylbenzene	BRL	5.8 µg/kg dry	1	"	"	"	"	"	
87-68-3	Hexachlorobutadiene	BRL	5.8 µg/kg dry	1	"	"	"	"	"	
591-78-6	2-Hexanone (MBK)	BRL	58.3 µg/kg dry	1	"	"	"	"	"	
98-82-8	Isopropylbenzene	BRL	5.8 µg/kg dry	1	"	"	"	"	"	
99-87-6	4-Isopropyltoluene	BRL	5.8 µg/kg dry	1	"	"	"	"	"	

Sample Identification	Client Project #	Matrix	Collection Date/Time	Received
SVE-7 (5') SA34531-02	037300	Soil	16-Sep-05 13:30	19-Sep-05

CAS No.	*Analyte(s)*	*Result*	**RDL/Units*	*Dilution*	*Method Ref.*	*Prepared*	*Analyzed*	*Batch*	*Analyst*	*Flag*
Volatile Organic Compounds										
Volatile Organic Compounds by SW846 8260B			Prepared by method	SW846 5035A Soil (low level)						
1634-04-4	Methyl tert-butyl ether	BRL	5.8 µg/kg dry	1	SW846 8260B	23-Sep-05	24-Sep-05	5091614	tim	
108-10-1	4-Methyl-2-pentanone (MIBK)	BRL	58.3 µg/kg dry	1	"	"	"	"	"	
75-09-2	Methylene chloride	BRL	58.3 µg/kg dry	1	"	"	"	"	"	
91-20-3	Naphthalene	BRL	5.8 µg/kg dry	1	"	"	"	"	"	
103-65-1	n-Propylbenzene	BRL	5.8 µg/kg dry	1	"	"	"	"	"	
100-42-5	Styrene	BRL	5.8 µg/kg dry	1	"	"	"	"	"	
630-20-6	1,1,1,2-Tetrachloroethane	BRL	5.8 µg/kg dry	1	"	"	"	"	"	
79-34-5	1,1,2,2-Tetrachloroethane	BRL	5.8 µg/kg dry	1	"	"	"	"	"	
127-18-4	Tetrachloroethene	BRL	5.8 µg/kg dry	1	"	"	"	"	"	
108-88-3	Toluene	BRL	5.8 µg/kg dry	1	"	"	"	"	"	
87-61-6	1,2,3-Trichlorobenzene	BRL	5.8 µg/kg dry	1	"	"	"	"	"	
120-82-1	1,2,4-Trichlorobenzene	BRL	5.8 µg/kg dry	1	"	"	"	"	"	
71-55-6	1,1,1-Trichloroethane	18.5	5.8 µg/kg dry	1	"	"	"	"	"	
79-00-5	1,1,2-Trichloroethane	BRL	5.8 µg/kg dry	1	"	"	"	"	"	
79-01-6	Trichloroethene	BRL	5.8 µg/kg dry	1	"	"	"	"	"	
75-69-4	Trichlorofluoromethane (Freon 11)	BRL	5.8 µg/kg dry	1	"	"	"	"	"	
96-18-4	1,2,3-Trichloropropane	BRL	5.8 µg/kg dry	1	"	"	"	"	"	
95-63-6	1,2,4-Trimethylbenzene	BRL	5.8 µg/kg dry	1	"	"	"	"	"	
108-67-8	1,3,5-Trimethylbenzene	BRL	5.8 µg/kg dry	1	"	"	"	"	"	
75-01-4	Vinyl chloride	BRL	5.8 µg/kg dry	1	"	"	"	"	"	
1330-20-7	m,p-Xylene	BRL	11.7 µg/kg dry	1	"	"	"	"	"	
95-47-6	o-Xylene	BRL	5.8 µg/kg dry	1	"	"	"	"	"	
Surrogate recoveries:										
460-00-4	*4-Bromofluorobenzene*	*100*	*70-130 %*		"	"	"	"	"	
2037-26-5	*Toluene-d8*	*100*	*70-130 %*		"	"	"	"	"	
17060-07-0	*1,2-Dichloroethane-d4*	*124*	*70-130 %*		"	"	"	"	"	
1868-53-7	*Dibromofluoromethane*	*107*	*70-130 %*		"	"	"	"	"	
General Chemistry Parameters										
	% Solids	89.0	%	1	SM2540 G Mod.	27-Sep-05	27-Sep-05	5091833	YM	

This laboratory report is not valid without an authorized signature on the cover page.

* Reportable Detection Limit BRL = Below Reporting Limit

Sample Identification	Client Project #	Matrix	Collection Date/Time	Received
SVE-3 (7') SA34531-03	037300	Soil	16-Sep-05 11:15	19-Sep-05

CAS No.	*Analyte(s)*	*Result*	**RDL/Units*	*Dilution*	*Method Ref.*	*Prepared*	*Analyzed*	*Batch*	*Analyst*	*Flag*
Volatile Organic Compounds										
	VOC Extraction	Field extracted	N/A	1	VOC	22-Sep-05	22-Sep-05	5091566	BD	
Volatile Organic Compounds by SW846 8260B			Prepared by method	SW846 5035A Soil (low level)						
67-64-1	Acetone	BRL	138 µg/kg dry	1	SW846 8260B	23-Sep-05	24-Sep-05	5091614	tim	
107-13-1	Acrylonitrile	BRL	6.9 µg/kg dry	1	"	"	"	"	"	
71-43-2	Benzene	BRL	6.9 µg/kg dry	1	"	"	"	"	"	
108-86-1	Bromobenzene	BRL	6.9 µg/kg dry	1	"	"	"	"	"	
74-97-5	Bromochloromethane	BRL	6.9 µg/kg dry	1	"	"	"	"	"	
75-27-4	Bromodichloromethane	BRL	6.9 µg/kg dry	1	"	"	"	"	"	
75-25-2	Bromoform	BRL	6.9 µg/kg dry	1	"	"	"	"	"	
74-83-9	Bromomethane	BRL	13.8 µg/kg dry	1	"	"	"	"	"	
78-93-3	2-Butanone (MEK)	BRL	69.1 µg/kg dry	1	"	"	"	"	"	
104-51-8	n-Butylbenzene	BRL	6.9 µg/kg dry	1	"	"	"	"	"	
135-98-8	sec-Butylbenzene	BRL	6.9 µg/kg dry	1	"	"	"	"	"	
98-06-6	tert-Butylbenzene	BRL	6.9 µg/kg dry	1	"	"	"	"	"	
75-15-0	Carbon disulfide	BRL	34.6 µg/kg dry	1	"	"	"	"	"	
56-23-5	Carbon tetrachloride	BRL	6.9 µg/kg dry	1	"	"	"	"	"	
108-90-7	Chlorobenzene	BRL	6.9 µg/kg dry	1	"	"	"	"	"	
75-00-3	Chloroethane	BRL	13.8 µg/kg dry	1	"	"	"	"	"	
67-66-3	Chloroform	BRL	6.9 µg/kg dry	1	"	"	"	"	"	
74-87-3	Chloromethane	BRL	13.8 µg/kg dry	1	"	"	"	"	"	
95-49-8	2-Chlorotoluene	BRL	6.9 µg/kg dry	1	"	"	"	"	"	
106-43-4	4-Chlorotoluene	BRL	6.9 µg/kg dry	1	"	"	"	"	"	
96-12-8	1,2-Dibromo-3-chloropropane	BRL	13.8 µg/kg dry	1	"	"	"	"	"	
124-48-1	Dibromochloromethane	BRL	6.9 µg/kg dry	1	"	"	"	"	"	
106-93-4	1,2-Dibromoethane (EDB)	BRL	6.9 µg/kg dry	1	"	"	"	"	"	
74-95-3	Dibromomethane	BRL	6.9 µg/kg dry	1	"	"	"	"	"	
95-50-1	1,2-Dichlorobenzene	BRL	6.9 µg/kg dry	1	"	"	"	"	"	
541-73-1	1,3-Dichlorobenzene	BRL	6.9 µg/kg dry	1	"	"	"	"	"	
106-46-7	1,4-Dichlorobenzene	BRL	6.9 µg/kg dry	1	"	"	"	"	"	
75-71-8	Dichlorodifluoromethane (Freon12)	BRL	13.8 µg/kg dry	1	"	"	"	"	"	
75-34-3	1,1-Dichloroethane	BRL	6.9 µg/kg dry	1	"	"	"	"	"	
107-06-2	1,2-Dichloroethane	BRL	6.9 µg/kg dry	1	"	"	"	"	"	
75-35-4	1,1-Dichloroethene	BRL	6.9 µg/kg dry	1	"	"	"	"	"	
156-59-2	cis-1,2-Dichloroethene	BRL	6.9 µg/kg dry	1	"	"	"	"	"	
156-60-5	trans-1,2-Dichloroethene	BRL	6.9 µg/kg dry	1	"	"	"	"	"	
78-87-5	1,2-Dichloropropane	BRL	6.9 µg/kg dry	1	"	"	"	"	"	
142-28-9	1,3-Dichloropropane	BRL	6.9 µg/kg dry	1	"	"	"	"	"	
594-20-7	2,2-Dichloropropane	BRL	6.9 µg/kg dry	1	"	"	"	"	"	
563-58-6	1,1-Dichloropropene	BRL	6.9 µg/kg dry	1	"	"	"	"	"	
10061-01-5	cis-1,3-Dichloropropene	BRL	6.9 µg/kg dry	1	"	"	"	"	"	
10061-02-6	trans-1,3-Dichloropropene	BRL	6.9 µg/kg dry	1	"	"	"	"	"	
100-41-4	Ethylbenzene	BRL	6.9 µg/kg dry	1	"	"	"	"	"	
87-68-3	Hexachlorobutadiene	BRL	6.9 µg/kg dry	1	"	"	"	"	"	
591-78-6	2-Hexanone (MBK)	BRL	69.1 µg/kg dry	1	"	"	"	"	"	
98-82-8	Isopropylbenzene	BRL	6.9 µg/kg dry	1	"	"	"	"	"	
99-87-6	4-Isopropyltoluene	BRL	6.9 µg/kg dry	1	"	"	"	"	"	

Sample Identification	Client Project #	Matrix	Collection Date/Time	Received
SVE-3 (7') SA34531-03	037300	Soil	16-Sep-05 11:15	19-Sep-05

CAS No.	*Analyte(s)*	*Result*	**RDL/Units*	*Dilution*	*Method Ref.*	*Prepared*	*Analyzed*	*Batch*	*Analyst*	*Flag*
Volatile Organic Compounds										
Volatile Organic Compounds by SW846 8260B			Prepared by method	SW846 5035A Soil (low level)						
1634-04-4	Methyl tert-butyl ether	BRL	6.9 µg/kg dry	1	SW846 8260B	23-Sep-05	24-Sep-05	5091614	tim	
108-10-1	4-Methyl-2-pentanone (MIBK)	BRL	69.1 µg/kg dry	1	"	"	"	"	"	
75-09-2	Methylene chloride	BRL	69.1 µg/kg dry	1	"	"	"	"	"	
91-20-3	Naphthalene	BRL	6.9 µg/kg dry	1	"	"	"	"	"	
103-65-1	n-Propylbenzene	BRL	6.9 µg/kg dry	1	"	"	"	"	"	
100-42-5	Styrene	BRL	6.9 µg/kg dry	1	"	"	"	"	"	
630-20-6	1,1,1,2-Tetrachloroethane	BRL	6.9 µg/kg dry	1	"	"	"	"	"	
79-34-5	1,1,2,2-Tetrachloroethane	BRL	6.9 µg/kg dry	1	"	"	"	"	"	
127-18-4	Tetrachloroethene	BRL	6.9 µg/kg dry	1	"	"	"	"	"	
108-88-3	Toluene	BRL	6.9 µg/kg dry	1	"	"	"	"	"	
87-61-6	1,2,3-Trichlorobenzene	BRL	6.9 µg/kg dry	1	"	"	"	"	"	
120-82-1	1,2,4-Trichlorobenzene	BRL	6.9 µg/kg dry	1	"	"	"	"	"	
71-55-6	1,1,1-Trichloroethane	BRL	6.9 µg/kg dry	1	"	"	"	"	"	
79-00-5	1,1,2-Trichloroethane	BRL	6.9 µg/kg dry	1	"	"	"	"	"	
79-01-6	Trichloroethene	BRL	6.9 µg/kg dry	1	"	"	"	"	"	
75-69-4	Trichlorofluoromethane (Freon 11)	BRL	6.9 µg/kg dry	1	"	"	"	"	"	
96-18-4	1,2,3-Trichloropropane	BRL	6.9 µg/kg dry	1	"	"	"	"	"	
95-63-6	1,2,4-Trimethylbenzene	BRL	6.9 µg/kg dry	1	"	"	"	"	"	
108-67-8	1,3,5-Trimethylbenzene	BRL	6.9 µg/kg dry	1	"	"	"	"	"	
75-01-4	Vinyl chloride	BRL	6.9 µg/kg dry	1	"	"	"	"	"	
1330-20-7	m,p-Xylene	BRL	13.8 µg/kg dry	1	"	"	"	"	"	
95-47-6	o-Xylene	BRL	6.9 µg/kg dry	1	"	"	"	"	"	
Surrogate recoveries:										
460-00-4	*4-Bromofluorobenzene*	*100*	*70-130 %*		"	"	"	"	"	
2037-26-5	*Toluene-d8*	*101*	*70-130 %*		"	"	"	"	"	
17060-07-0	*1,2-Dichloroethane-d4*	*125*	*70-130 %*		"	"	"	"	"	
1868-53-7	*Dibromofluoromethane*	*106*	*70-130 %*		"	"	"	"	"	
General Chemistry Parameters										
	% Solids	93.4	%	1	SM2540 G Mod.	27-Sep-05	27-Sep-05	5091833	YM	

This laboratory report is not valid without an authorized signature on the cover page.

* Reportable Detection Limit BRL = Below Reporting Limit

Sample Identification	Client Project #	Matrix	Collection Date/Time	Received
SVE-6 (5')	037300	Soil	16-Sep-05 10:00	19-Sep-05
SA34531-04				

CAS No.	*Analyte(s)*	*Result*	**RDL/Units*	*Dilution*	*Method Ref.*	*Prepared*	*Analyzed*	*Batch*	*Analyst*	*Flag*
Volatile Organic Compounds										
	VOC Extraction	Field extracted	N/A	1	VOC	22-Sep-05	22-Sep-05	5091566	BD	
Volatile Organic Compounds by SW846 8260B			Prepared by method	SW846 5035A Soil (low level)						
67-64-1	Acetone	399	109 µg/kg dry	1	SW846 8260B	23-Sep-05	24-Sep-05	5091614	tim	VOC6
107-13-1	Acrylonitrile	BRL	5.5 µg/kg dry	1	"	"	"	"	"	
71-43-2	Benzene	BRL	5.5 µg/kg dry	1	"	"	"	"	"	
108-86-1	Bromobenzene	BRL	5.5 µg/kg dry	1	"	"	"	"	"	
74-97-5	Bromochloromethane	BRL	5.5 µg/kg dry	1	"	"	"	"	"	
75-27-4	Bromodichloromethane	BRL	5.5 µg/kg dry	1	"	"	"	"	"	
75-25-2	Bromoform	BRL	5.5 µg/kg dry	1	"	"	"	"	"	
74-83-9	Bromomethane	BRL	10.9 µg/kg dry	1	"	"	"	"	"	
78-93-3	2-Butanone (MEK)	BRL	54.5 µg/kg dry	1	"	"	"	"	"	
104-51-8	n-Butylbenzene	BRL	5.5 µg/kg dry	1	"	"	"	"	"	
135-98-8	sec-Butylbenzene	BRL	5.5 µg/kg dry	1	"	"	"	"	"	
98-06-6	tert-Butylbenzene	BRL	5.5 µg/kg dry	1	"	"	"	"	"	
75-15-0	Carbon disulfide	BRL	27.3 µg/kg dry	1	"	"	"	"	"	
56-23-5	Carbon tetrachloride	BRL	5.5 µg/kg dry	1	"	"	"	"	"	
108-90-7	Chlorobenzene	BRL	5.5 µg/kg dry	1	"	"	"	"	"	
75-00-3	Chloroethane	BRL	10.9 µg/kg dry	1	"	"	"	"	"	
67-66-3	Chloroform	BRL	5.5 µg/kg dry	1	"	"	"	"	"	
74-87-3	Chloromethane	BRL	10.9 µg/kg dry	1	"	"	"	"	"	
95-49-8	2-Chlorotoluene	BRL	5.5 µg/kg dry	1	"	"	"	"	"	
106-43-4	4-Chlorotoluene	BRL	5.5 µg/kg dry	1	"	"	"	"	"	
96-12-8	1,2-Dibromo-3-chloropropane	BRL	10.9 µg/kg dry	1	"	"	"	"	"	
124-48-1	Dibromochloromethane	BRL	5.5 µg/kg dry	1	"	"	"	"	"	
106-93-4	1,2-Dibromoethane (EDB)	BRL	5.5 µg/kg dry	1	"	"	"	"	"	
74-95-3	Dibromomethane	BRL	5.5 µg/kg dry	1	"	"	"	"	"	
95-50-1	1,2-Dichlorobenzene	BRL	5.5 µg/kg dry	1	"	"	"	"	"	
541-73-1	1,3-Dichlorobenzene	BRL	5.5 µg/kg dry	1	"	"	"	"	"	
106-46-7	1,4-Dichlorobenzene	BRL	5.5 µg/kg dry	1	"	"	"	"	"	
75-71-8	Dichlorodifluoromethane (Freon12)	BRL	10.9 µg/kg dry	1	"	"	"	"	"	
75-34-3	1,1-Dichloroethane	BRL	5.5 µg/kg dry	1	"	"	"	"	"	
107-06-2	1,2-Dichloroethane	BRL	5.5 µg/kg dry	1	"	"	"	"	"	
75-35-4	1,1-Dichloroethene	BRL	5.5 µg/kg dry	1	"	"	"	"	"	
156-59-2	cis-1,2-Dichloroethene	BRL	5.5 µg/kg dry	1	"	"	"	"	"	
156-60-5	trans-1,2-Dichloroethene	BRL	5.5 µg/kg dry	1	"	"	"	"	"	
78-87-5	1,2-Dichloropropane	BRL	5.5 µg/kg dry	1	"	"	"	"	"	
142-28-9	1,3-Dichloropropane	BRL	5.5 µg/kg dry	1	"	"	"	"	"	
594-20-7	2,2-Dichloropropane	BRL	5.5 µg/kg dry	1	"	"	"	"	"	
563-58-6	1,1-Dichloropropene	BRL	5.5 µg/kg dry	1	"	"	"	"	"	
10061-01-5	cis-1,3-Dichloropropene	BRL	5.5 µg/kg dry	1	"	"	"	"	"	
10061-02-6	trans-1,3-Dichloropropene	BRL	5.5 µg/kg dry	1	"	"	"	"	"	
100-41-4	Ethylbenzene	BRL	5.5 µg/kg dry	1	"	"	"	"	"	
87-68-3	Hexachlorobutadiene	BRL	5.5 µg/kg dry	1	"	"	"	"	"	
591-78-6	2-Hexanone (MBK)	BRL	54.5 µg/kg dry	1	"	"	"	"	"	
98-82-8	Isopropylbenzene	BRL	5.5 µg/kg dry	1	"	"	"	"	"	
99-87-6	4-Isopropyltoluene	BRL	5.5 µg/kg dry	1	"	"	"	"	"	

Sample Identification	Client Project #	Matrix	Collection Date/Time	Received
SVE-6 (5') SA34531-04	037300	Soil	16-Sep-05 10:00	19-Sep-05

CAS No.	*Analyte(s)*	*Result*	**RDL/Units*	*Dilution*	*Method Ref.*	*Prepared*	*Analyzed*	*Batch*	*Analyst*	*Flag*
Volatile Organic Compounds										
Volatile Organic Compounds by SW846 8260B			Prepared by method	SW846 5035A Soil (low level)						
1634-04-4	Methyl tert-butyl ether	BRL	5.5 µg/kg dry	1	SW846 8260B	23-Sep-05	24-Sep-05	5091614	tim	
108-10-1	4-Methyl-2-pentanone (MIBK)	BRL	54.5 µg/kg dry	1	"	"	"	"	"	
75-09-2	Methylene chloride	BRL	54.5 µg/kg dry	1	"	"	"	"	"	
91-20-3	Naphthalene	BRL	5.5 µg/kg dry	1	"	"	"	"	"	
103-65-1	n-Propylbenzene	BRL	5.5 µg/kg dry	1	"	"	"	"	"	
100-42-5	Styrene	BRL	5.5 µg/kg dry	1	"	"	"	"	"	
630-20-6	1,1,1,2-Tetrachloroethane	BRL	5.5 µg/kg dry	1	"	"	"	"	"	
79-34-5	1,1,2,2-Tetrachloroethane	BRL	5.5 µg/kg dry	1	"	"	"	"	"	
127-18-4	Tetrachloroethene	BRL	5.5 µg/kg dry	1	"	"	"	"	"	
108-88-3	Toluene	BRL	5.5 µg/kg dry	1	"	"	"	"	"	
87-61-6	1,2,3-Trichlorobenzene	BRL	5.5 µg/kg dry	1	"	"	"	"	"	
120-82-1	1,2,4-Trichlorobenzene	BRL	5.5 µg/kg dry	1	"	"	"	"	"	
71-55-6	1,1,1-Trichloroethane	55.4	5.5 µg/kg dry	1	"	"	"	"	"	
79-00-5	1,1,2-Trichloroethane	BRL	5.5 µg/kg dry	1	"	"	"	"	"	
79-01-6	Trichloroethene	BRL	5.5 µg/kg dry	1	"	"	"	"	"	
75-69-4	Trichlorofluoromethane (Freon 11)	BRL	5.5 µg/kg dry	1	"	"	"	"	"	
96-18-4	1,2,3-Trichloropropane	BRL	5.5 µg/kg dry	1	"	"	"	"	"	
95-63-6	1,2,4-Trimethylbenzene	BRL	5.5 µg/kg dry	1	"	"	"	"	"	
108-67-8	1,3,5-Trimethylbenzene	BRL	5.5 µg/kg dry	1	"	"	"	"	"	
75-01-4	Vinyl chloride	BRL	5.5 µg/kg dry	1	"	"	"	"	"	
1330-20-7	m,p-Xylene	BRL	10.9 µg/kg dry	1	"	"	"	"	"	
95-47-6	o-Xylene	BRL	5.5 µg/kg dry	1	"	"	"	"	"	
Surrogate recoveries:										
460-00-4	*4-Bromofluorobenzene*	*101*	*70-130 %*		"	"	"	"	"	
2037-26-5	*Toluene-d8*	*101*	*70-130 %*		"	"	"	"	"	
17060-07-0	*1,2-Dichloroethane-d4*	*123*	*70-130 %*		"	"	"	"	"	
1868-53-7	*Dibromofluoromethane*	*105*	*70-130 %*		"	"	"	"	"	
General Chemistry Parameters										
	% Solids	93.2	%	1	SM2540 G Mod.	27-Sep-05	27-Sep-05	5091833	YM	

Sample Identification	Client Project #	Matrix	Collection Date/Time	Received
SVE-4 (3-4') SA34531-05	037300	Soil	15-Sep-05 11:02	19-Sep-05

CAS No.	*Analyte(s)*	*Result*	**RDL/Units*	*Dilution*	*Method Ref.*	*Prepared*	*Analyzed*	*Batch*	*Analyst*	*Flag*
Volatile Organic Compounds										
	VOC Extraction	Field extracted	N/A	1	VOC	22-Sep-05	22-Sep-05	5091566	BD	
Volatile Organic Compounds by SW846 8260B			Prepared by method	SW846 5035A Soil (low level)						
67-64-1	Acetone	212	147 µg/kg dry	1	SW846 8260B	23-Sep-05	24-Sep-05	5091614	tim	VOC6
107-13-1	Acrylonitrile	BRL	7.4 µg/kg dry	1	"	"	"	"	"	
71-43-2	Benzene	BRL	7.4 µg/kg dry	1	"	"	"	"	"	
108-86-1	Bromobenzene	BRL	7.4 µg/kg dry	1	"	"	"	"	"	
74-97-5	Bromochloromethane	BRL	7.4 µg/kg dry	1	"	"	"	"	"	
75-27-4	Bromodichloromethane	BRL	7.4 µg/kg dry	1	"	"	"	"	"	
75-25-2	Bromoform	BRL	7.4 µg/kg dry	1	"	"	"	"	"	
74-83-9	Bromomethane	BRL	14.7 µg/kg dry	1	"	"	"	"	"	
78-93-3	2-Butanone (MEK)	BRL	73.6 µg/kg dry	1	"	"	"	"	"	
104-51-8	n-Butylbenzene	BRL	7.4 µg/kg dry	1	"	"	"	"	"	
135-98-8	sec-Butylbenzene	BRL	7.4 µg/kg dry	1	"	"	"	"	"	
98-06-6	tert-Butylbenzene	BRL	7.4 µg/kg dry	1	"	"	"	"	"	
75-15-0	Carbon disulfide	BRL	36.8 µg/kg dry	1	"	"	"	"	"	
56-23-5	Carbon tetrachloride	BRL	7.4 µg/kg dry	1	"	"	"	"	"	
108-90-7	Chlorobenzene	BRL	7.4 µg/kg dry	1	"	"	"	"	"	
75-00-3	Chloroethane	BRL	14.7 µg/kg dry	1	"	"	"	"	"	
67-66-3	Chloroform	BRL	7.4 µg/kg dry	1	"	"	"	"	"	
74-87-3	Chloromethane	BRL	14.7 µg/kg dry	1	"	"	"	"	"	
95-49-8	2-Chlorotoluene	BRL	7.4 µg/kg dry	1	"	"	"	"	"	
106-43-4	4-Chlorotoluene	BRL	7.4 µg/kg dry	1	"	"	"	"	"	
96-12-8	1,2-Dibromo-3-chloropropane	BRL	14.7 µg/kg dry	1	"	"	"	"	"	
124-48-1	Dibromochloromethane	BRL	7.4 µg/kg dry	1	"	"	"	"	"	
106-93-4	1,2-Dibromoethane (EDB)	BRL	7.4 µg/kg dry	1	"	"	"	"	"	
74-95-3	Dibromomethane	BRL	7.4 µg/kg dry	1	"	"	"	"	"	
95-50-1	1,2-Dichlorobenzene	BRL	7.4 µg/kg dry	1	"	"	"	"	"	
541-73-1	1,3-Dichlorobenzene	BRL	7.4 µg/kg dry	1	"	"	"	"	"	
106-46-7	1,4-Dichlorobenzene	BRL	7.4 µg/kg dry	1	"	"	"	"	"	
75-71-8	Dichlorodifluoromethane (Freon12)	BRL	14.7 µg/kg dry	1	"	"	"	"	"	
75-34-3	1,1-Dichloroethane	BRL	7.4 µg/kg dry	1	"	"	"	"	"	
107-06-2	1,2-Dichloroethane	BRL	7.4 µg/kg dry	1	"	"	"	"	"	
75-35-4	1,1-Dichloroethene	BRL	7.4 µg/kg dry	1	"	"	"	"	"	
156-59-2	cis-1,2-Dichloroethene	BRL	7.4 µg/kg dry	1	"	"	"	"	"	
156-60-5	trans-1,2-Dichloroethene	BRL	7.4 µg/kg dry	1	"	"	"	"	"	
78-87-5	1,2-Dichloropropane	BRL	7.4 µg/kg dry	1	"	"	"	"	"	
142-28-9	1,3-Dichloropropane	BRL	7.4 µg/kg dry	1	"	"	"	"	"	
594-20-7	2,2-Dichloropropane	BRL	7.4 µg/kg dry	1	"	"	"	"	"	
563-58-6	1,1-Dichloropropene	BRL	7.4 µg/kg dry	1	"	"	"	"	"	
10061-01-5	cis-1,3-Dichloropropene	BRL	7.4 µg/kg dry	1	"	"	"	"	"	
10061-02-6	trans-1,3-Dichloropropene	BRL	7.4 µg/kg dry	1	"	"	"	"	"	
100-41-4	Ethylbenzene	BRL	7.4 µg/kg dry	1	"	"	"	"	"	
87-68-3	Hexachlorobutadiene	BRL	7.4 µg/kg dry	1	"	"	"	"	"	
591-78-6	2-Hexanone (MBK)	BRL	73.6 µg/kg dry	1	"	"	"	"	"	
98-82-8	Isopropylbenzene	BRL	7.4 µg/kg dry	1	"	"	"	"	"	
99-87-6	4-Isopropyltoluene	BRL	7.4 µg/kg dry	1	"	"	"	"	"	

Sample Identification	Client Project #	Matrix	Collection Date/Time	Received
SVE-4 (3-4') SA34531-05	037300	Soil	15-Sep-05 11:02	19-Sep-05

CAS No.	*Analyte(s)*	*Result*	**RDL/Units*	*Dilution*	*Method Ref.*	*Prepared*	*Analyzed*	*Batch*	*Analyst*	*Flag*
Volatile Organic Compounds										
Volatile Organic Compounds by SW846 8260B			Prepared by method	SW846 5035A Soil (low level)						
1634-04-4	Methyl tert-butyl ether	BRL	7.4 µg/kg dry	1	SW846 8260B	23-Sep-05	24-Sep-05	5091614	tim	
108-10-1	4-Methyl-2-pentanone (MIBK)	BRL	73.6 µg/kg dry	1	"	"	"	"	"	
75-09-2	Methylene chloride	BRL	73.6 µg/kg dry	1	"	"	"	"	"	
91-20-3	Naphthalene	BRL	7.4 µg/kg dry	1	"	"	"	"	"	
103-65-1	n-Propylbenzene	BRL	7.4 µg/kg dry	1	"	"	"	"	"	
100-42-5	Styrene	BRL	7.4 µg/kg dry	1	"	"	"	"	"	
630-20-6	1,1,1,2-Tetrachloroethane	BRL	7.4 µg/kg dry	1	"	"	"	"	"	
79-34-5	1,1,2,2-Tetrachloroethane	BRL	7.4 µg/kg dry	1	"	"	"	"	"	
127-18-4	Tetrachloroethene	34.4	7.4 µg/kg dry	1	"	"	"	"	"	
108-88-3	Toluene	BRL	7.4 µg/kg dry	1	"	"	"	"	"	
87-61-6	1,2,3-Trichlorobenzene	BRL	7.4 µg/kg dry	1	"	"	"	"	"	
120-82-1	1,2,4-Trichlorobenzene	BRL	7.4 µg/kg dry	1	"	"	"	"	"	
71-55-6	1,1,1-Trichloroethane	67.8	7.4 µg/kg dry	1	"	"	"	"	"	
79-00-5	1,1,2-Trichloroethane	BRL	7.4 µg/kg dry	1	"	"	"	"	"	
79-01-6	Trichloroethene	7.7	7.4 µg/kg dry	1	"	"	"	"	"	
75-69-4	Trichlorofluoromethane (Freon 11)	BRL	7.4 µg/kg dry	1	"	"	"	"	"	
96-18-4	1,2,3-Trichloropropane	BRL	7.4 µg/kg dry	1	"	"	"	"	"	
95-63-6	1,2,4-Trimethylbenzene	BRL	7.4 µg/kg dry	1	"	"	"	"	"	
108-67-8	1,3,5-Trimethylbenzene	BRL	7.4 µg/kg dry	1	"	"	"	"	"	
75-01-4	Vinyl chloride	BRL	7.4 µg/kg dry	1	"	"	"	"	"	
1330-20-7	m,p-Xylene	BRL	14.7 µg/kg dry	1	"	"	"	"	"	
95-47-6	o-Xylene	BRL	7.4 µg/kg dry	1	"	"	"	"	"	
Surrogate recoveries:										
460-00-4	*4-Bromofluorobenzene*	*99.8*	*70-130 %*		"	"	"	"	"	
2037-26-5	*Toluene-d8*	*98.6*	*70-130 %*		"	"	"	"	"	
17060-07-0	*1,2-Dichloroethane-d4*	*123*	*70-130 %*		"	"	"	"	"	
1868-53-7	*Dibromofluoromethane*	*103*	*70-130 %*		"	"	"	"	"	
General Chemistry Parameters										
	% Solids	77.0	%	1	SM2540 G Mod.	27-Sep-05	27-Sep-05	5091833	YM	

This laboratory report is not valid without an authorized signature on the cover page.

* Reportable Detection Limit BRL = Below Reporting Limit

Volatile Organic Compounds - Quality Control

Analyte(s)	Result	*RDL	Units	Spike Level	Source Result	%REC	%REC Limits	RPD	RPD Limit	Flag
Batch 5091614 - SW846 5035A Soil (low level)										
Blank (5091614-BLK1)				Prepared: 23-Sep-05 Analyzed: 24-Sep-05						
Acetone	BRL	100	µg/kg wet							
Acrylonitrile	BRL	5.0	µg/kg wet							
Benzene	BRL	5.0	µg/kg wet							
Bromobenzene	BRL	5.0	µg/kg wet							
Bromochloromethane	BRL	5.0	µg/kg wet							
Bromodichloromethane	BRL	5.0	µg/kg wet							
Bromoform	BRL	5.0	µg/kg wet							
Bromomethane	BRL	10.0	µg/kg wet							
2-Butanone (MEK)	BRL	50.0	µg/kg wet							
n-Butylbenzene	BRL	5.0	µg/kg wet							
sec-Butylbenzene	BRL	5.0	µg/kg wet							
tert-Butylbenzene	BRL	5.0	µg/kg wet							
Carbon disulfide	BRL	25.0	µg/kg wet							
Carbon tetrachloride	BRL	5.0	µg/kg wet							
Chlorobenzene	BRL	5.0	µg/kg wet							
Chloroethane	BRL	10.0	µg/kg wet							
Chloroform	BRL	5.0	µg/kg wet							
Chloromethane	BRL	10.0	µg/kg wet							
2-Chlorotoluene	BRL	5.0	µg/kg wet							
4-Chlorotoluene	BRL	5.0	µg/kg wet							
1,2-Dibromo-3-chloropropane	BRL	10.0	µg/kg wet							
Dibromochloromethane	BRL	5.0	µg/kg wet							
1,2-Dibromoethane (EDB)	BRL	5.0	µg/kg wet							
Dibromomethane	BRL	5.0	µg/kg wet							
1,2-Dichlorobenzene	BRL	5.0	µg/kg wet							
1,3-Dichlorobenzene	BRL	5.0	µg/kg wet							
1,4-Dichlorobenzene	BRL	5.0	µg/kg wet							
Dichlorodifluoromethane (Freon12)	BRL	10.0	µg/kg wet							
1,1-Dichloroethane	BRL	5.0	µg/kg wet							
1,2-Dichloroethane	BRL	5.0	µg/kg wet							
1,1-Dichloroethene	BRL	5.0	µg/kg wet							
cis-1,2-Dichloroethene	BRL	5.0	µg/kg wet							
trans-1,2-Dichloroethene	BRL	5.0	µg/kg wet							
1,2-Dichloropropane	BRL	5.0	µg/kg wet							
1,3-Dichloropropane	BRL	5.0	µg/kg wet							
2,2-Dichloropropane	BRL	5.0	µg/kg wet							
1,1-Dichloropropene	BRL	5.0	µg/kg wet							
cis-1,3-Dichloropropene	BRL	5.0	µg/kg wet							
trans-1,3-Dichloropropene	BRL	5.0	µg/kg wet							
Ethylbenzene	BRL	5.0	µg/kg wet							
Hexachlorobutadiene	BRL	5.0	µg/kg wet							
2-Hexanone (MBK)	BRL	50.0	µg/kg wet							
Isopropylbenzene	BRL	5.0	µg/kg wet							
4-Isopropyltoluene	BRL	5.0	µg/kg wet							
Methyl tert-butyl ether	BRL	5.0	µg/kg wet							
4-Methyl-2-pentanone (MIBK)	BRL	50.0	µg/kg wet							
Methylene chloride	BRL	50.0	µg/kg wet							
Naphthalene	BRL	5.0	µg/kg wet							
n-Propylbenzene	BRL	5.0	µg/kg wet							
Styrene	BRL	5.0	µg/kg wet							
1,1,1,2-Tetrachloroethane	BRL	5.0	µg/kg wet							
1,1,2,2-Tetrachloroethane	BRL	5.0	µg/kg wet							
Tetrachloroethene	BRL	5.0	µg/kg wet							
Toluene	BRL	5.0	µg/kg wet							

Volatile Organic Compounds - Quality Control

Analyte(s)	Result	*RDL	Units	Spike Level	Source Result	%REC	%REC Limits	RPD	RPD Limit	Flag
Batch 5091614 - SW846 5035A Soil (low level)										
Blank (5091614-BLK1)				Prepared: 23-Sep-05 Analyzed: 24-Sep-05						
1,2,3-Trichlorobenzene	BRL	5.0	µg/kg wet							
1,2,4-Trichlorobenzene	BRL	5.0	µg/kg wet							
1,1,1-Trichloroethane	BRL	5.0	µg/kg wet							
1,1,2-Trichloroethane	BRL	5.0	µg/kg wet							
Trichloroethene	BRL	5.0	µg/kg wet							
Trichlorofluoromethane (Freon 11)	BRL	5.0	µg/kg wet							
1,2,3-Trichloropropane	BRL	5.0	µg/kg wet							
1,2,4-Trimethylbenzene	BRL	5.0	µg/kg wet							
1,3,5-Trimethylbenzene	BRL	5.0	µg/kg wet							
Vinyl chloride	BRL	5.0	µg/kg wet							
m,p-Xylene	BRL	10.0	µg/kg wet							
o-Xylene	BRL	5.0	µg/kg wet							
Surrogate: 4-Bromofluorobenzene	*49.3*		µg/kg wet	*50.0*		*98.6*	*70-130*			
Surrogate: Toluene-d8	*49.7*		µg/kg wet	*50.0*		*99.4*	*70-130*			
Surrogate: 1,2-Dichloroethane-d4	*56.9*		µg/kg wet	*50.0*		*114*	*70-130*			
Surrogate: Dibromofluoromethane	*50.9*		µg/kg wet	*50.0*		*102*	*70-130*			
LCS (5091614-BS1)				Prepared: 23-Sep-05 Analyzed: 24-Sep-05						
Acetone	65.9		µg/kg wet	20.0		330	0.663-201			QC-2
Acrylonitrile	18.5		µg/kg wet	20.0		92.5	70-130			
Benzene	19.5		µg/kg wet	20.0		97.5	70-130			
Bromobenzene	18.2		µg/kg wet	20.0		91.0	70-130			
Bromochloromethane	18.4		µg/kg wet	20.0		92.0	70-130			
Bromodichloromethane	20.3		µg/kg wet	20.0		102	70-130			
Bromoform	17.0		µg/kg wet	20.0		85.0	70-130			
Bromomethane	22.0		µg/kg wet	20.0		110	54-151			
2-Butanone (MEK)	14.9		µg/kg wet	20.0		74.5	6.66-154			
n-Butylbenzene	17.7		µg/kg wet	20.0		88.5	70-130			
sec-Butylbenzene	20.0		µg/kg wet	20.0		100	70-130			
tert-Butylbenzene	20.2		µg/kg wet	20.0		101	70-130			
Carbon disulfide	18.6		µg/kg wet	20.0		93.0	70-130			
Carbon tetrachloride	19.0		µg/kg wet	20.0		95.0	70-130			
Chlorobenzene	18.9		µg/kg wet	20.0		94.5	70-130			
Chloroethane	22.5		µg/kg wet	20.0		112	64.5-148			
Chloroform	18.7		µg/kg wet	20.0		93.5	70-130			
Chloromethane	21.5		µg/kg wet	20.0		108	70-130			
2-Chlorotoluene	20.1		µg/kg wet	20.0		100	70-130			
4-Chlorotoluene	18.4		µg/kg wet	20.0		92.0	70-130			
1,2-Dibromo-3-chloropropane	15.2		µg/kg wet	20.0		76.0	70-130			
Dibromochloromethane	17.6		µg/kg wet	20.0		88.0	52-148			
1,2-Dibromoethane (EDB)	17.9		µg/kg wet	20.0		89.5	70-130			
Dibromomethane	18.5		µg/kg wet	20.0		92.5	70-130			
1,2-Dichlorobenzene	18.8		µg/kg wet	20.0		94.0	70-130			
1,3-Dichlorobenzene	17.4		µg/kg wet	20.0		87.0	70-130			
1,4-Dichlorobenzene	18.3		µg/kg wet	20.0		91.5	70-130			
Dichlorodifluoromethane (Freon12)	21.4		µg/kg wet	20.0		107	60.6-196			
1,1-Dichloroethane	20.4		µg/kg wet	20.0		102	70-130			
1,2-Dichloroethane	19.5		µg/kg wet	20.0		97.5	70-130			
1,1-Dichloroethene	20.8		µg/kg wet	20.0		104	70-130			
cis-1,2-Dichloroethene	19.8		µg/kg wet	20.0		99.0	70-130			
trans-1,2-Dichloroethene	18.5		µg/kg wet	20.0		92.5	70-130			
1,2-Dichloropropane	20.1		µg/kg wet	20.0		100	70-130			
1,3-Dichloropropane	16.9		µg/kg wet	20.0		84.5	70-130			
2,2-Dichloropropane	14.5		µg/kg wet	20.0		72.5	70-130			
1,1-Dichloropropene	19.5		µg/kg wet	20.0		97.5	70-130			

This laboratory report is not valid without an authorized signature on the cover page.

* Reportable Detection Limit BRL = Below Reporting Limit

Volatile Organic Compounds - Quality Control

Analyte(s)	Result	*RDL	Units	Spike Level	Source Result	%REC	%REC Limits	RPD	RPD Limit	Flag
Batch 5091614 - SW846 5035A Soil (low level)										
LCS (5091614-BS1)				Prepared: 23-Sep-05 Analyzed: 24-Sep-05						
cis-1,3-Dichloropropene	17.2		µg/kg wet	20.0		86.0	70-130			
trans-1,3-Dichloropropene	16.6		µg/kg wet	20.0		83.0	70-130			
Ethylbenzene	19.7		µg/kg wet	20.0		98.5	70-130			
Hexachlorobutadiene	17.4		µg/kg wet	20.0		87.0	67-154			
2-Hexanone (MBK)	11.3		µg/kg wet	20.0		56.5	70-130			QC-2
Isopropylbenzene	19.0		µg/kg wet	20.0		95.0	70-130			
4-Isopropyltoluene	20.2		µg/kg wet	20.0		101	70-130			
Methyl tert-butyl ether	18.7		µg/kg wet	20.0		93.5	70-130			
4-Methyl-2-pentanone (MIBK)	14.7		µg/kg wet	20.0		73.5	38.8-135			
Methylene chloride	19.8		µg/kg wet	20.0		99.0	70-130			
Naphthalene	14.8		µg/kg wet	20.0		74.0	70-130			
n-Propylbenzene	18.4		µg/kg wet	20.0		92.0	70-130			
Styrene	17.8		µg/kg wet	20.0		89.0	70-130			
1,1,1,2-Tetrachloroethane	19.2		µg/kg wet	20.0		96.0	70-130			
1,1,2,2-Tetrachloroethane	17.5		µg/kg wet	20.0		87.5	70-130			
Tetrachloroethene	17.6		µg/kg wet	20.0		88.0	70-130			
Toluene	19.2		µg/kg wet	20.0		96.0	70-130			
1,2,3-Trichlorobenzene	16.2		µg/kg wet	20.0		81.0	70-130			
1,2,4-Trichlorobenzene	15.5		µg/kg wet	20.0		77.5	70-130			
1,1,1-Trichloroethane	20.8		µg/kg wet	20.0		104	70-130			
1,1,2-Trichloroethane	19.0		µg/kg wet	20.0		95.0	70-130			
Trichloroethene	19.5		µg/kg wet	20.0		97.5	70-130			
Trichlorofluoromethane (Freon 11)	22.8		µg/kg wet	20.0		114	66.7-150			
1,2,3-Trichloropropane	18.0		µg/kg wet	20.0		90.0	70-130			
1,2,4-Trimethylbenzene	18.4		µg/kg wet	20.0		92.0	70-130			
1,3,5-Trimethylbenzene	19.0		µg/kg wet	20.0		95.0	70-130			
Vinyl chloride	22.8		µg/kg wet	20.0		114	70-130			
m,p-Xylene	37.8		µg/kg wet	40.0		94.5	70-130			
o-Xylene	19.4		µg/kg wet	20.0		97.0	70-130			
Surrogate: 4-Bromofluorobenzene	*50.4*		µg/kg wet	*50.0*		*101*	*70-130*			
Surrogate: Toluene-d8	*50.2*		µg/kg wet	*50.0*		*100*	*70-130*			
Surrogate: 1,2-Dichloroethane-d4	*50.5*		µg/kg wet	*50.0*		*101*	*70-130*			
Surrogate: Dibromofluoromethane	*50.7*		µg/kg wet	*50.0*		*101*	*70-130*			
LCS Dup (5091614-BSD1)				Prepared: 23-Sep-05 Analyzed: 24-Sep-05						
Acetone	67.1		µg/kg wet	20.0		336	0.663-201	1.80	50	QC-2
Acrylonitrile	22.1		µg/kg wet	20.0		110	70-130	17.3	25	
Benzene	20.1		µg/kg wet	20.0		100	70-130	2.53	25	
Bromobenzene	19.2		µg/kg wet	20.0		96.0	70-130	5.35	25	
Bromochloromethane	19.3		µg/kg wet	20.0		96.5	70-130	4.77	25	
Bromodichloromethane	21.2		µg/kg wet	20.0		106	70-130	3.85	25	
Bromoform	17.9		µg/kg wet	20.0		89.5	70-130	5.16	25	
Bromomethane	21.7		µg/kg wet	20.0		108	54-151	1.83	50	
2-Butanone (MEK)	15.2		µg/kg wet	20.0		76.0	6.66-154	1.99	50	
n-Butylbenzene	17.6		µg/kg wet	20.0		88.0	70-130	0.567	25	
sec-Butylbenzene	20.8		µg/kg wet	20.0		104	70-130	3.92	25	
tert-Butylbenzene	21.2		µg/kg wet	20.0		106	70-130	4.83	25	
Carbon disulfide	18.9		µg/kg wet	20.0		94.5	70-130	1.60	25	
Carbon tetrachloride	20.2		µg/kg wet	20.0		101	70-130	6.12	25	
Chlorobenzene	19.6		µg/kg wet	20.0		98.0	70-130	3.64	25	
Chloroethane	22.8		µg/kg wet	20.0		114	64.5-148	1.77	50	
Chloroform	19.3		µg/kg wet	20.0		96.5	70-130	3.16	25	
Chloromethane	21.9		µg/kg wet	20.0		110	70-130	1.83	25	
2-Chlorotoluene	20.2		µg/kg wet	20.0		101	70-130	0.995	25	
4-Chlorotoluene	19.0		µg/kg wet	20.0		95.0	70-130	3.21	25	

This laboratory report is not valid without an authorized signature on the cover page.

* Reportable Detection Limit BRL = Below Reporting Limit

Volatile Organic Compounds - Quality Control

Analyte(s)	Result	*RDL	Units	Spike Level	Source Result	%REC	%REC Limits	RPD	RPD Limit	Flag
Batch 5091614 - SW846 5035A Soil (low level)										
LCS Dup (5091614-BSD1)				Prepared: 23-Sep-05 Analyzed: 24-Sep-05						
1,2-Dibromo-3-chloropropane	16.8		µg/kg wet	20.0		84.0	70-130	10.0	25	
Dibromochloromethane	18.8		µg/kg wet	20.0		94.0	52-148	6.59	50	
1,2-Dibromoethane (EDB)	19.1		µg/kg wet	20.0		95.5	70-130	6.49	25	
Dibromomethane	19.7		µg/kg wet	20.0		98.5	70-130	6.28	25	
1,2-Dichlorobenzene	19.0		µg/kg wet	20.0		95.0	70-130	1.06	25	
1,3-Dichlorobenzene	18.2		µg/kg wet	20.0		91.0	70-130	4.49	25	
1,4-Dichlorobenzene	18.0		µg/kg wet	20.0		90.0	70-130	1.65	25	
Dichlorodifluoromethane (Freon12)	22.1		µg/kg wet	20.0		110	60.6-196	2.76	50	
1,1-Dichloroethane	21.1		µg/kg wet	20.0		106	70-130	3.85	25	
1,2-Dichloroethane	20.8		µg/kg wet	20.0		104	70-130	6.45	25	
1,1-Dichloroethene	21.2		µg/kg wet	20.0		106	70-130	1.90	25	
cis-1,2-Dichloroethene	20.4		µg/kg wet	20.0		102	70-130	2.99	25	
trans-1,2-Dichloroethene	19.0		µg/kg wet	20.0		95.0	70-130	2.67	25	
1,2-Dichloropropane	21.0		µg/kg wet	20.0		105	70-130	4.88	25	
1,3-Dichloropropane	18.2		µg/kg wet	20.0		91.0	70-130	7.41	25	
2,2-Dichloropropane	14.9		µg/kg wet	20.0		74.5	70-130	2.72	25	
1,1-Dichloropropene	20.6		µg/kg wet	20.0		103	70-130	5.49	25	
cis-1,3-Dichloropropene	18.1		µg/kg wet	20.0		90.5	70-130	5.10	25	
trans-1,3-Dichloropropene	17.3		µg/kg wet	20.0		86.5	70-130	4.13	25	
Ethylbenzene	20.3		µg/kg wet	20.0		102	70-130	3.49	25	
Hexachlorobutadiene	17.7		µg/kg wet	20.0		88.5	67-154	1.71	50	
2-Hexanone (MBK)	13.3		µg/kg wet	20.0		66.5	70-130	16.3	25	QC-2
Isopropylbenzene	19.9		µg/kg wet	20.0		99.5	70-130	4.63	25	
4-Isopropyltoluene	20.4		µg/kg wet	20.0		102	70-130	0.985	25	
Methyl tert-butyl ether	20.4		µg/kg wet	20.0		102	70-130	8.70	25	
4-Methyl-2-pentanone (MIBK)	16.5		µg/kg wet	20.0		82.5	38.8-135	11.5	50	
Methylene chloride	20.4		µg/kg wet	20.0		102	70-130	2.99	25	
Naphthalene	13.8		µg/kg wet	20.0		69.0	70-130	6.99	25	QC-1
n-Propylbenzene	19.7		µg/kg wet	20.0		98.5	70-130	6.82	25	
Styrene	18.7		µg/kg wet	20.0		93.5	70-130	4.93	25	
1,1,1,2-Tetrachloroethane	20.2		µg/kg wet	20.0		101	70-130	5.08	25	
1,1,2,2-Tetrachloroethane	19.2		µg/kg wet	20.0		96.0	70-130	9.26	25	
Tetrachloroethene	18.3		µg/kg wet	20.0		91.5	70-130	3.90	25	
Toluene	19.7		µg/kg wet	20.0		98.5	70-130	2.57	25	
1,2,3-Trichlorobenzene	15.6		µg/kg wet	20.0		78.0	70-130	3.77	25	
1,2,4-Trichlorobenzene	15.4		µg/kg wet	20.0		77.0	70-130	0.647	25	
1,1,1-Trichloroethane	21.4		µg/kg wet	20.0		107	70-130	2.84	25	
1,1,2-Trichloroethane	20.4		µg/kg wet	20.0		102	70-130	7.11	25	
Trichloroethene	19.8		µg/kg wet	20.0		99.0	70-130	1.53	25	
Trichlorofluoromethane (Freon 11)	23.8		µg/kg wet	20.0		119	66.7-150	4.29	50	
1,2,3-Trichloropropane	19.3		µg/kg wet	20.0		96.5	70-130	6.97	25	
1,2,4-Trimethylbenzene	19.2		µg/kg wet	20.0		96.0	70-130	4.26	25	
1,3,5-Trimethylbenzene	19.6		µg/kg wet	20.0		98.0	70-130	3.11	25	
Vinyl chloride	24.3		µg/kg wet	20.0		122	70-130	6.78	25	
m,p-Xylene	39.6		µg/kg wet	40.0		99.0	70-130	4.65	25	
o-Xylene	20.1		µg/kg wet	20.0		100	70-130	3.05	25	
Surrogate: 4-Bromofluorobenzene	*51.6*		µg/kg wet	*50.0*		*103*	*70-130*			
Surrogate: Toluene-d8	*49.9*		µg/kg wet	*50.0*		*99.8*	*70-130*			
Surrogate: 1,2-Dichloroethane-d4	*51.5*		µg/kg wet	*50.0*		*103*	*70-130*			
Surrogate: Dibromofluoromethane	*50.9*		µg/kg wet	*50.0*		*102*	*70-130*			

General Chemistry Parameters - Quality Control

Analyte(s)	Result	*RDL	Units	Spike Level	Source Result	%REC	%REC Limits	RPD	RPD Limit	Flag
Batch 5091833 - General Preparation										
Duplicate (5091833-DUP1)		**Source: SA34567-01**		Prepared & Analyzed: 27-Sep-05						
% Solids	90.7		%		88.4			2.57	20	

Notes and Definitions

QC-1	Analyte out of acceptance range.
QC-2	Analyte out of acceptance range in QC spike but no reportable concentration present in sample.
vext2	Field extracted
VOC6	The production of Acetone and other ketones is commonly seen when using Sodium Bisulfate in the SW 846 5035A extraction technique.
BRL	Below Reporting Limit - Analyte NOT DETECTED at or above the reporting limit
dry	Sample results reported on a dry weight basis
NR	Not Reported
RPD	Relative Percent Difference

A plus sign (+) in the Method Reference column indicates the method is not accredited by NELAC.

Laboratory Control Sample (LCS): A known matrix spiked with compound(s) representative of the target analytes, which is used to document laboratory performance.

Matrix Duplicate: An intra-laboratory split sample which is used to document the precision of a method in a given sample matrix.

Matrix Spike: An aliquot of a sample spiked with a known concentration of target analyte(s). The spiking occurs prior to sample preparation and analysis. A matrix spike is used to document the bias of a method in a given sample matrix.

Method Blank: An analyte-free matrix to which all reagents are added in the same volumes or proportions as used in sample processing. The method blank should be carried through the complete sample preparation and analytical procedure. The method blank is used to document contamination resulting from the analytical process.

Method Detection Limit (MDL): The minimum concentration of a substance that can be measured and reported with 99% confidence that the analyte concentration is greater than zero and is determined from analysis of a sample in a given matrix type containing the analyte.

Reportable Detection Limit (RDL): The lowest concentration that can be reliably achieved within specified limits of precision and accuracy during routine laboratory operating conditions. For many analytes the RDL analyte concentration is selected as the lowest non-zero standard in the calibration curve. While the RDL is approximately 5 to 10 times the MDL, the RDL for each sample takes into account the sample volume/weight, extract/digestate volume, cleanup procedures and, if applicable, dry weight correction. Sample RDLs are highly matrix-dependent.

Surrogate: An organic compound which is similar to the target analyte(s) in chemical composition and behavior in the analytical process, but which is not normally found in environmental samples. These compounds are spiked into all blanks, standards, and

Validated by:
Hanibal C. Tayeh, Ph.D.
Nicole Brown

SA34531 (m)

SPECTRUM ANALYTICAL, INC.
Featuring
HANIBAL TECHNOLOGY

CHAIN OF CUSTODY RECORD

Page 1 of 1

Special Handling:
- ☒ Standard TAT - 7 to 10 business days
- ☐ Rush TAT - Date Needed: _____
- All TATs subject to laboratory approval. Min. 24-hour notification needed for rushes.
- Samples disposed of after 60 days unless otherwise instructed.

Report To: ERM - HARTFORD
3 HARTFORD SQ WEST, SUITE 300 HARTFORD, CT 06106

Project Mgr.: Bob Deake

Invoice To: SAME

P.O. No.: 037300 RQN: _____

Project No.: 037300
Site Name: INTELLIDATA
Location: New MILFORD State: CT
Sampler(s): N. Vlahakis

1=$Na_2S_2O_3$ 2=HCl 3=H_2SO_4 4=HNO_3 5=NaOH 6=Ascorbic Acid
7=CH_3OH 8=$NaHSO_4$ 9=_____ 10=_____

DW=Drinking Water GW=Groundwater WW=Wastewater
O=Oil SW=Surface Water SO=Soil SL=Sludge A=Air
X1=_____ X2=_____ X3=_____

G=Grab C=Composite

Lab Id:	Sample Id:	Date:	Time:	Type	Matrix	Preservative	# of VOA Vials	# of Amber Glass	# of Clear Glass	# of Plastic	VOCS 8260
SA34531-01	SVE-5(6')	9/15/05	1145	G	SO	87	3	1			✓
02	SVE-7(5')	9/16/05	1330	↓	↓	↓	↓	↓			↓
03	SVE-3(4')	9/16/05	1115	↓	↓	↓	↓	↓			↓
04	SVE-6(5')	9/16/05	1000	↓	↓	↓	↓	↓			↓
05	SVE-4(3.5')	9/15/05	1102	↓	↓	↓	↓	↓			↓

QA Reporting Notes: (check if needed)

State specific reporting standards
If applicable, please list below

☐ Provide MCP CAM Report
Were all field QC requirements met as per MADEP CAM Section 2.0?
☐ Yes ☐ No
(Response required for CAM report)

☒ Fax results when available to (860) 524-5680
☒ E-mail to Jason.Feiner@erm.com
EDD Format _____

Condition upon receipt: ☐ Iced ☐ Ambient ☐ °C 6

Relinquished by:	Received by:	Date:	Time:
N. Vlahakis	[signature]	9/18/05	1015
[signature]	[signature]	9/19/05	18:50

11 Almgren Drive • Agawam, Massachusetts 01001 • 413-789-9018 • Fax 413-789-4076 • www.spectrum-analytical.com

This laboratory report is not valid without an authorized signature on the cover page.

* Reportable Detection Limit BRL = Below Reporting Limit

APPENDIX B

ENGINEERING DESIGN REPORT
SOIL VAPOR EXTRACTION /AIR SPARGE SYSTEM

80 Pickett District Road
New Milford, CT

November, 2004

Prepared for:

CEE Associates Limited Partnership
c/o InteliData Corporation
11600 Sunrise Valley Drive, Suite 100
Reston, VA 20191

Prepared by:

ERM-NEW ENGLAND, INC.
146 Wyllys Street
Hartford, Connecticut 06106

ENGINEERING DESIGN
SOIL VAPOR EXTRACTION /AIR SPARGE SYSTEM

80 Pickett District Road
New Milford, CT

November, 2004

Prepared for:

CEE Associates Limited Partnership
c/o InteliData Corporation
11600 Sunrise Valley Drive, Suite 100
Reston, VA 20191

Prepared by:

ERM-NEW ENGLAND, INC.
146 Wyllys Street
Hartford, Connecticut 06106

F:\Projects\00016718\design\SVE design final.doc

TABLE OF CONTENTS

LIST OF APPENDICES ..... *III*

1.0 INTRODUCTION *1-1*

1.1 BACKGROUND *1-1*

1.2 ABBREVIATIONS *1-3*

2.0 PILOT STUDY – CONDUCT AND FINDINGS *2-1*

2.1 PILOT STUDY EQUIPMENT *2-2*

2.2 PILOT TEST DESCRIPTION *2-2*

2.3 PILOT TEST RESULTS *2-4*

2.3.1 Soil Sampling Results *2-4*

2.3.2 SVE Results *2-4*

2.3.3 Sparge Results *2-5*

3.0 DESCRIPTION OF REMEDIAL MEASURE *3-1*

3.1 PROJECT GOALS *3-3*

3.1.1 Performance Criteria *3-3*

3.1.2 Effectiveness Criteria *3-4*

3.1.3 System Shutdown Criteria *3-5*

3.2 WELL LAYOUT *3-7*

3.2.1 Sparge Wells *3-7*

3.2.2 Soil Vent Wells *3-7*

3.2.3 Vapor Observation Wells *3-8*

3.4 WELL CONSTRUCTION *3-8*

3.4.1 Air Sparge Wells *3-8*

3.4.2 Soil Vapor Extraction Wells *3-9*

3.4.3 Vapor Observation Wells *3-10*

3.5 *REMEDIAL EQUIPMENT* 3-11

3.5.1 *Air Sparge System* 3-12

3.5.2 *SVE System* 3-13

3.5.3 *Emission Control System* 3-15

3.5.4 *Piping Layout* 3-16

3.5.4.1 *Air Sparge System* 3-16

3.5.4.2 *SVE System* 3-17

3.5.5 *Trailer Enclosure* 3-19

3.5.6 *Utility Requirements* 3-19

4.0 *PROCESS CONTROL NARRATIVE* 4-1

4.1 *GENERAL PROCESS DESCRIPTION* 4-1

4.2 *AIR SPARGE SYSTEM* 4-1

4.2.1 *Basic Operation* 4-1

4.2.2 *Shutdown and Alarm/Autodialer Conditions* 4-4

4.3 *SOIL VAPOR EXTRACTION SYSTEM* 4-6

4.3.1 *Basic Operation* 4-6

4.3.2 *Shutdown and Alarm/Autodialer Conditions* 4-8

5.0 *SYSTEM OPERATION AND MAINTENANCE* 5-1

LIST OF APPENDICES

APPENDIX A *Figures*

Figure 1 *Site Location Map*

Figure 2 *Overburden Groundwater Contour Map*

Figure 3 *SVE/AS Well Layout*

Figure 4 *SVE/AS Piping and Equipment Arrangement*

Figure 5 *TCE Soil Vapor Concentration Contours*

Figure 6 *Total VOC Soil Vapor Concentration Contours*

Figure 7 *Extent of TCE in Overburden Groundwater*

Figure 8 *Sparge Well Schematic/Well Head Details*

Figure 9 *SVE Well Schematic/Well Head Details*

Figure 10 *Vapor Observation Well Schematic/Well Head Details*

Figure 11 *Process and Instrumentation Drawing, Symbols and Legends*

Figure 12 *Process and Instrumentation Drawing, Sparging System*

Figure 13 *Process and Instrumentation Drawing, SVE System*

APPENDIX B *Tables*

Table 1 *Pilot Study Well Installation Soil Sample Results*

Table 2 *SVE Operation Parameters*

Table 3 *SVE Vacuum Measurements*

Table 4 *Pilot Study Operation Soil Vapor Results*

Table 5 *Indoor Air Sample Results*

Table 6 *Post Pilot Study Sub-Slab Soil Vapor Sample Results*

Table 7 *Air Sparge Parameters*

Table 8 *Summary of Groundwater Sample Results from Air Sparge Wells*

Table 8 *Sparge Equipment List*

Table 9 *SVE Equipment List*

APPENDIX C *Well Construction Logs*

APPENDIX D *Catalog Cuts*

APPENDIX E *Engineering Calculations*

APPENDIX F *Laboratory Data Sheets*

1.0 *INTRODUCTION*

This document presents the results of pilot studies and the proposed full scale design for the soil vapor extraction (SVE) and air sparge (AS) system to address residual volatile organic compounds (VOC) present in soil and groundwater beneath the former manufacturing facility located at 80 Pickett District Road in New Milford, CT ("Site"). The SVE/AS system design will be implemented as a remedial measure to reduce VOC concentrations in groundwater and soil toward compliance with the applicable remedial criteria established in the Connecticut Remediation Standard Regulations (RSRs). The design basis for the SVE/AS system is based on the information gathered during a comprehensive pilot study, which was conducted by ERM between July 12 and July 19, 2004.

1.1 *BACKGROUND*

The Site located at 80 Pickett District Road, New Milford, CT Litchfield county consists of eight acres that is generally flat with a moderate slope from West to East. The central portion of the Site is covered by a single story building of approximately 68, 000 square feet in size. Paved parking areas on site provide additional impervious areas of approximately 87,000 square feet. Approximately 53,000 square feet of the building is currently occupied by a leather warehouse and distribution center, while the remaining portion of the building is occupied by a graphics design company which manufacturers signs, banners, flags, etc. Surface water runoff is collected in drainage swales on the North and South ends of the site and directed to a ten foot wide drainage swale that runs parallel to Pickett District Road and ultimately discharges to the Housatonic River. Stormwater runoff from the Site building is also directed to this swale.

Boring logs completed on the Site indicate that the overburden on the northern portion of the Site consists of a thick deposit of light gray, coarse

to medium sand and trace gravel, overlying a very thin till layer. The till consists of an unsorted mixture of clay, silt, sand, cobbles and boulders mantling the bedrock. The overburden on the southern half of the Site consists of a 10to 25-foot layer of sand and gravel underlain by 5 to 18 feet of a very light colored till comprised of silt, clay and some sand and gravel. The color of the local till deposits is likely due to the white dolomitic marble comprising the bedrock in the Site area (Stockbridge Marble Formation).

Groundwater is present in the overburden across all portions of the Site, with the potential exception of the far northwest and topographically up-gradient portions of the Site, where shallow bedrock features dominate the topography. Groundwater on-site has a seasonal fluctuation of approximately 2 to 3 feet and ranges from 3 to 11 feet below ground surface (bgs). The groundwater beneath the Site building generally ranges from 9 to 10 feet seasonally. Based on elevation data, the groundwater flow direction is towards the East/Southeast and has a velocity of approximately 0.04 feet per day with an ultimate discharge to the Housatonic River (which is located 800 feet to the east of the Site). Refer to Figure 2 for overburden groundwater contours.

Bedrock was encountered at the ground surface (outcrops) to a depth of 40 feet bgs, and has been mapped as white dolomitic marble with significant weathering in the upper 5 to 10 feet, with limited fractures with increasing depth.

Currently, levels of chlorinated volatile organic compounds (CVOCs) are present in soil and groundwater under the eastern half of the Site and under the building at levels that exceed the applicable numerical criteria established by the Connecticut Department of Environmental Protection (CT DEP) in the Remediation Standard Regulations (RSRs). The SVE/AS system is designed to reduce CVOC concentrations in these media toward

a demonstration of compliance with applicable RSR soil and groundwater criteria.

A site location map is provided in Figure 1. This design report presents the following documentation of the SVE/AS systems:

- Pilot study results;
- Process & instrumentation diagrams and equipment specifications;
- Plans for system installation;
- Engineering and process description of the SVE/AS systems;
- Well installation plan and schematics; and
- Engineering calculations.

1.2 *ABBREVIATIONS*

The following abbreviations are used throughout this document:

AOC	Area of Concern
AS	Air Sparge
ASC	Actual Stack Concentration
ASMP	Air Sparge Monitoring Point
ASW	Air Sparge Well
Bgs	Below Ground Surface
CGS	Connecticut General Statutes
COC	Contaminant of Concern
CSM	Conceptual Site Model
CTA	Connecticut Transfer Act
CT DEP	Connecticut Department of Environmental Protection
CVOC	Chlorinated Volatile Organic Compounds
1,1-DCE	1,1-dichloroethene
1,1-DCA	1,1-dichloroethane
1,2-DCE	1,2-dichloroethene

EPA	United States Environmental Protection Agency
GAC	Granular Activated Carbon
GB PMC	Pollutant Mobility Criteria for GB Groundwater Areas
GWPC	Groundwater Protection Criteria
Hg	Mercury
Hp	Horsepower
I/C DEC	Industrial/Commercial Direct Exposure Criteria
I/C VC	Industrial/Commercial Volatilization Criteria
LEP	Licensed Environmental Professional
MASC	Maximum Allowable Stack Concentration
PCE	Tetrachloroethylene
PID	Photo-ionization Detector
PMC	Pollutant Mobility Criteria
ppm	parts per million
psi	pounds per square inch
RAP	Remedial Action Plan
RCRA	Resource Conservation and Recovery Act
RDEC	Residential Direct Exposure Criteria
RCSA	Regulations of Connecticut State Agencies
ROI	Radius of Influence
RSRs	Connecticut Remediation Standard Regulations
RVC	Residential Volatilization Criteria
SCFM	Standard cubic feet per minute
SVE	Soil Vapor Extraction
SVMP	Soil Vapor Monitoring Point
SVVC	Soil Vapor Volatilization Criteria
1,1,1-TCA	1,1,1-Trichloroethane
TCE	Trichloroethylene
µg/kg	micrograms per kilogram
µg/L	micrograms per liter
UST	Underground Storage Tank
VC	Vinyl Chloride

VOCs	Volatile Organic Compounds
VOW	Vapor Observation Well

2.0 *PILOT STUDY - CONDUCT AND FINDINGS*

In May 2004, ERM developed a Pilot Study Work Plan for the one-week long SVE/AS system pilot test. The pilot test work was intended to:

- Assess the effectiveness of the technology at the site;
- Collect data needed for full scale design of the SVE/AS system; and
- Provide a description of the process whereby the effectiveness of the remedial approach can be assessed and appropriate decisions regarding full-scale deployment can be made.

The critical facets of this Pilot Study Work Plan were:

- Installation of one sparge point (ASW-1), on the South side of the building, adjacent to the stormwater vault;
- Installation of one groundwater monitoring/AS well (ASW-2) within the building to the north of SVE-1;
- Installation of two (2) SVE points within the building;
- Installation of two (2) AS monitoring points (ASMP) one within the building and one on the South side of the building outside;
- Installation of six (6) soil vapor monitoring points (SVMP) within the building;
- Installation of appropriate blowers, piping, manifolds, and off-gas treatment (carbon); and
- Use of monitoring wells *ERM-7, ERM-13,* and *ERM-14* as monitoring points for the SVE/AS wells.

For details of the construction of the pilot study wells refer to the well construction logs in Appendix C. Refer to Figure 3 for the location of the above noted wells and Figure 4 for piping layout in Appendix A.

2.1 *PILOT STUDY EQUIPMENT*

The major components of the pilot test system included:

- one 2 hp regenerative air sparging blower,
- one 7.5 hp regenerative SVE blower,
- SVE/AS trailer enclosure,
- one moisture separator,
- a single 200 pound (G-2) carbon drum for emission control, and
- supporting instrumentation.

2.2 *PILOT STUDY DESCRIPTION*

The Pilot Study was intended to assess the suitability of the AS/SVE approach to treat the residual CVOCs in soil and groundwater at the Site. The Pilot Study was also used to evaluate the ability to propagate a vacuum under the slab of the building. It was used to develop design criteria needed to prepare a final design and assess the need for off-gas treatment. To that end, the following tasks were completed:

- A one-week dual (SVE/AS) test was performed to assess full-scale system requirements (i.e. blower sizes, airflows, operating pressure/vacuum, off-gas concentrations, etc.);
- Soil samples were collected during the installation of the SVE, SVMP, ASMP, and ASW wells, and analyzed for CVOCs;
- Soil vapor samples were collected from the SVMPs and analyzed for CVOCs;
- Groundwater samples were collected from the air sparge well

ASW-1 before and after the Study and analyzed for CVOCs;

- Total VOC concentrations (indicated using a PID with an 11.7eV lamp) and vacuum levels at the SVMPs were observed and recorded throughout the Pilot Study;
- Pressure and total VOC concentrations at the ASMPs and groundwater monitoring wells were also recorded throughout the Pilot Study;
- Dissolved oxygen levels in the water at the ASMPs and wells was measured using a DO meter; and
- CVOC samples of the treated air stream following the granular activated carbon canister were collected and analyzed for CVOCs to evaluate treatment efficiency.

The SVE, AS points, and associated piping were installed in the spring of 2004. The pilot test equipment was installed on July 9, 2004. The operation of the SVE system was initiated on July 12, 2004 and continued until July 19, 2004. On the first day of operation of the SVE system, the applied vacuum was varied on each SVE point in order to find the optimal operating condition. Once the optimal condition was identified considering vacuum, PID, and flow measurements, the system was set at those conditions for the remainder of the Study.

The AS system was initiated on July 13, 2004 and continued until July 19, 2004. As with the SVE system, the applied pressure and flow of the AS system were varied to evaluate the optimal operating conditions as indicated by DTW, D.O., pressure, and PID measurements. Refer to section 2.3.3 for a more detailed discussion of sparge system performance parameters.

2.3 *PILOT STUDY RESULTS*

2.3.1 Soil Sampling Results

Soil samples collected during the installation of the Pilot Study wells were analyzed for CVOCs. Laboratory results indicated no CVOCs above laboratory minimum detection limits. The only constituents detected were acetone and 2-butanone at concentrations well below the applicable RSR criteria. Refer to Table 1 in Appendix B for analytical results.

2.3.2 SVE Results

The results of the SVE study indicated an extensive "zone of influence," approximately a 120 foot radius was observed for the extraction wells. The zone of influence was based on a minimum of 0.1-inch (water column) vacuum in the subsurface measured at the SVMPs. In addition, based on analytical results of soil vapor samples, VOC concentrations were reduced by as much as 95% in that media over the duration of the pilot test.

The indoor air sample collected during the test contained lower concentrations of CVOCs than the sample collected one month after the completion of the test. These results indicate that the SVE system will reduce the potential migration of CVOC vapors to the indoor air.

Soil vapor samples from all the SVMPs, SVE-1, SVE-2, ASMP-2, and ERM-13 were collected and analyzed for CVOCs one month after the completion of the Pilot Study. Compared to samples from the SVE wells, these results indicate a significant rebound in CVOC concentrations, suggesting that mass transfer from the soil and/or groundwater phase could be expected to be somewhat rapid and therefore the use of "pulsing" (one week on followed by one month off) may not be appropriate for this Site until rebound concentrations subside. After the

system reaches asymptotic conditions, pulsing options may be explored to maximize the effectiveness (cost/benefit) of the installed system.

Refer to Tables 2 and 3 for SVE pilot test parameters, Table 4 for SVE soil vapor data, Table 5 for indoor air sample results, and Table 6 for sub-slab soil vapor results. These tables are located in Appendix B.

2.3.3 *Sparge Results*

The results of the AS study were less pronounced, and a significant "zone of influence" could not be defined during the limited time frame of the Study. Monitoring well ERM-14, which is located 10 feet from air sparge well ASW-1 showed no influence in terms of DO (dissolved oxygen) from ASW-1, indicating a radius of influence of less than 10 feet during the Pilot Study. However, review of operational parameters (flow, pressure, CVOC concentrations, etc.) during the Study suggested that increased airflow and pressure would provide an increase in the radius of influence.

During the Pilot Study, the AS blower was operated at its maximum pressure/flow, which resulted in an average pressure of 4 psi at the injection well and a flow rate of 7 scfm. Based on the amount of water in the well (~9.5 feet), a minimum pressure of approximately 4 psi was required to displace the water in ASW-1. ERM assumes that the pressure and flow limitations of the pilot sparge blower (just enough to displace the water) may explain the insignificant zone of influence suggested from the DO data. Despite the low air sparge flow rate, groundwater samples collected from the AS well before and after the pilot test showed a 50% reduction of CVOC concentrations over the duration of the pilot test. These results suggest that an AS system with increased pressure and flow will result in an increased radius of influence and increased mass transfer/removal.

Refer to Table 7 for AS parameters and Table 8 for groundwater sample

results located in Appendix B.

3.0 *DESCRIPTION OF REMEDIAL MEASURE*

The remediation approach for this Site incorporates the technologies of air sparging and soil vapor extraction. The SVE/AS system has been designed to aggressively address the COCs in overburden groundwater along the eastern portion of the Site and the residual soil/soil gas contamination under the building in and around AOC-5 (Former Plating Area). The SVE system and the pressure gradient (vacuum) will serve to minimize the potential infiltration of CVOCs into the Site building resulting from air sparging beneath the building (which will transfer VOCs from the dissolved phase to the soil vapor). Elimination of potential indoor vapor mitigation pathways is one of the performance objectives of this system.

A general description of AS/SVE technology is presented below:

The purpose of the AS system is to inject clean, ambient air into the saturated zone (overburden groundwater), via AS wells using a blower/compressor, in order to strip CVOCs from the groundwater. The primary CVOCs of concern at this site are trichloroethene (TCE), 1,1,1-trichloroethane (TCA) and 1,1-dichloroethene (DCE). These contaminants are readily "stripped" (mainly because of a relatively high affinity for the gaseous phase) and, therefore, are good candidates for technologies using volatilization as a means of mass transfer.

SVE uses wells that are screened through a portion of the vadose zone for the extraction of soil vapors. A vacuum is induced at the extraction well, thereby inducing a pressure gradient, which in turn produces a vapor flow through the vadose zone.

When used in conjunction with AS, the SVE system serves three purposes. First, the SVE system is used to capture vapors generated by the AS system. This is done to minimize the potential migration of CVOC laden

sparge vapors from the subsurface into the Site building. Second, the SVE system is used to mobilize CVOCs adsorbed onto vadose zone soil. This is accomplished by the induced airflow from the SVE system. Third, the SVE system will pull air from within the building through cracks/seams and other discontinuities in the building slab to replenish the air being removed via vacuum from beneath the slab. This process will eliminate the flow pathway for CVOCs from sub-slab to the building interior.

The extent of CVOCs in the soil gas beneath the building was estimated using soil gas data collected by ERM and a comparison of the data to the (revised) Soil Vapor Volatilization Criteria (SVVC). Figures 5 and 6 represent the concentration contours for TCE and total VOCs, respectively. In addition, Figure 5 indicates the revised I/C SVVC for TCE, which represents the approximate limits of the area requiring remediation. According to these figures, an area of approximately 20,000 square feet beneath the building appears to be affected.

The extent of groundwater contamination was determined from the data generated from the most recent groundwater sampling round, combined with samples collected from the ASWs. Figure 7 represents the concentration contours for TCE and indicates the limits of the plume requiring remediation based on the proposed Residential (RES) and Industrial Commercial (I/C) Groundwater VC for TCE.

Due to the relatively low concentrations of other CVOCs in the groundwater, it is assumed that the remediation of TCE in the groundwater in this area will eliminate the source of contamination in the on-site groundwater plume, and allow for a (relatively) rapid demonstration of compliance with I/C VC.

Refer to Appendix A for Figures.

3.1 PROJECT GOALS

3.1.1 Performance Criteria

The performance criteria refer to the ability of the components of the system, including mechanical devices, to function as designed. The effectiveness of the system in meeting remedial objectives is discussed in Section 3.1.2.

The performance objectives of the AS/SVE system are as follows:

- To maintain a vacuum under the building floor slab to prevent migration of soil vapors into the building;
- to induce air flow within the saturated zone for stripping the CVOCs from the water and soil within the unsaturated zone throughout the area affected by CVOCs to collect the mobilized, gaseous CVOC's as depicted in Figures 5 through 7; and
- to maintain an AS/SVE off-gas which does not exceed the maximum allowable stack concentration (MASC) established in section 22a-174-29 of the Regulations of Connecticut State Agencies (RCSA).

The specific criteria for each of these objectives are discussed below.

To demonstrate that acceptable AS flow in the saturated zone is achieved (in the areas of elevated VOCs) a measurable increase in dissolved oxygen level in vapor observation wells (VOW), groundwater monitoring wells, or SVE wells, and/or a measurable increase in VOC concentration in the unsaturated zone should be observed in these wells. To demonstrate that soil vapor flow in the unsaturated zone is adequate (in the area of elevated VOCs) a vacuum level of at least 0.05 inches water column should be achieved in each of the VOWs.

To demonstrate that the air emissions criteria are met, the following will be performed:

- a sample from the outlet of the SVE system will be collected in a summa canister and analyzed for CVOCs per EPA method TO-14; the total soil vapor flow rate will be measured and recorded; and
- based on the analytical results, the actual stack concentration (ASC) and MASC for each CVOC of concern will be calculated.

Contaminants of concern include:

- Trichloroethene (TCE);
- 1,1-Dichloroethene (DCE); and
- 1,1,1 Trichloroethane (TCA)

3.1.2 *Effectiveness Criteria*

The goal of the project is to reduce the concentrations of the contaminants of concern in the soil, soil vapor, and groundwater in the source areas to concentrations meeting the GB Pollutant Mobility Criteria (GB PMC) for soil, Soil Vapor Industrial /Commercial Volatilization Criteria (I/C VC) for soil vapor, and Groundwater Industrial /Commercial Volatilization Criteria (GW I/C VC) for groundwater. These standards are listed below:

Contaminant	GB PMC (mg/kg)	Soil Vapor I/C VC (ppm)	GW I/C VC (μg/L)
Trichloroethene (TCE)	1	0.26	67
1,1-Dichloroethene (DCE)	1.4	7	920
1,1,1-Trichloroethane (TCA)	40	130	16,000

CVOCs in soil were not detected above the applicable criteria during investigation activities performed at the Site and therefore are to be addressed indirectly (i.e. successful remediation of groundwater will be assumed to address residual in soil, as well).

To verify achievement of the above goals, soil, soil vapor and groundwater samples will be obtained and analyzed for CVOCs. The analytical results of the samples collected will be compiled and compared to the above criteria. If the concentration of the above listed contaminants is less than the above listed standards, the project goals will be met.

Soil vapor and groundwater samples will be collected a minimum of two weeks after the system is shutdown to evaluate if the CVOC levels have rebounded above the applicable criteria noted above. If levels are below the applicable criteria then quarterly groundwater and soil vapor (fluid media) sampling would be required to confirm that the Soil Vapor and GW I/C VC have been met.

3.1.3 System Shutdown Criteria

Operation of the SVE/AS system will be discontinued if <u>any</u> of the following three conditions occur:

1. The effectiveness criteria discussed above are met;

2. The SVE/AS system has been operating for a period of at least 12 months, asymptotic conditions as defined below have occurred, and soil vapor and groundwater sample analyses demonstrate that the levels of remaining contaminants are below the applicable criteria; or

3. Groundwater sampling indicates that remedial goals have been achieved.

An asymptotic condition is defined as follows: the monthly mass of total VOCs removed during three consecutive months of operation are less than 10% of the maximum mass of total VOCs removed in any prior one month period. A reduction in the mass of VOCs removed in one month to 10 percent of the maximum mass previously removed in a single month is indicative of a significant decline in effectiveness of the system. Essentially, when this criterion is reached, it would take a minimum of 10 months of continued operation at the reduced mass removal rate to extract an amount equal to the maximum mass of VOC that had been removed in a prior month. This criterion illustrates that the operation of the system has reached a point of diminishing returns.

Furthermore, in order to demonstrate asymptotic conditions, it must also be demonstrated that a good faith effort has been made to maximize the VOC mass removal efficiency. Efforts should include: ensuring proper distribution of AS flow to each AS well and adjusting flow from each extraction well to maintain pneumatic control over AS flow while maximizing mass removal rate. In addition, pulsing the system (i.e. shutting down for a month followed by re-start) will be attempted to maximize the mass removal rate. Reaching an asymptotic condition (after all efforts have been made to maximize mass removal) will also indicate that the sub-slab soil and groundwater has been remediated to the maximum extent prudent, as defined in the CT RSRs. In addition, a number of the AS and/or SVE points could be left in place to act as passive venting points, should they prove to be needed.

3.2 *WELL LAYOUT*

The proposed layout for the AS wells, SVE wells and VOWs is presented on Figure 3. The layout is based on the approximate limits of impacted soil vapor and groundwater as depicted in Figures 5, 6 and 7 respectively. The limits of the impacted areas were derived using analytical results from soil vapor and groundwater samples collected at the Site.

3.2.1 Sparge Wells

The AS system will utilize seventeen sparge wells, nine of which will be installed beneath the building slab, and the remaining eight will be installed along the southern edge of the building and along Pickett District road. The locations of the AS wells were chosen to aggressively treat the groundwater plume as depicted in Figure 6. As shown on Figure 3, AS wells are concentrated in the expected source area in the central portion of the building and along Pickett District road to act as a barrier and to limit the transport of VOCs offsite. The expected areal coverage of the seventeen AS wells is shown in Figure 3.

3.2.2 Soil Vent Wells

The SVE system will utilize seven extraction wells located beneath the building in the area of impacted soil vapor. Based on the pilot test, the ROI of the SVE wells may be as high as 120 feet, while still maintaining a minimum vacuum reading of >0.05 inches of H_2O, depending on the applied vacuum and the soil vapor flow rate extracted. Based on the observations and empirical data collected during the pilot test, a design airflow rate of 80 scfm per well and a vacuum of approximately 14 inches of water at the well head will produce a ROI of approximately 100 feet. A smaller design radius of influence of 50 feet is utilized to ensure that the AS vapors are captured by the SVE system. Therefore, seven properly

placed SVE wells (SVE-1 through SVE-7) should sufficiently cover the source area while providing a measure of safety factor in the design.

The location of the SVE wells and the approximate effective radius of each well can be found in Figure 3 in Appendix A.

3.2.3 *Vapor Observation Wells*

Eight vapor observation wells were installed during the pilot study to confirm the effects of the AS/SVE system and will be used during full-scale operation. In areas where groundwater monitoring wells are present, they will be utilized for the measurement of groundwater elevation, CVOC concentrations in the groundwater and soil vapor pressure (vacuum), and dissolved oxygen levels in groundwater.

The well locations were strategically determined with regards to the AS and SVE well locations such that field measurements can be collected to confirm the design ROI and overall system effectiveness.

The locations of the eight vapor observation wells are shown on Figure 3 in Appendix A.

3.4 *WELL CONSTRUCTION*

3.4.1 *Air Sparge Wells*

A schematic for the AS well construction is shown in Figure 8. As shown in the figure, all the AS wells will be constructed of 1" diameter Schedule 80 PVC riser, with a 2-foot long, 20-slot, schedule 80 PVC screen, with exception of the two sparge wells (ASW-1 and ASW-2) installed for the Pilot Study. ASW-1 and ASW-2 were constructed of 2-inch schedule 80 PVC riser, with a 2.5', 20 slot, schedule 80 PVC screen. The remaining AS wells will be installed on the bedrock surface or to a depth of 25 feet, whichever is encountered first.

The AS wells will be installed with a $4^1/_4$ inch (ID) hollow stem auger (HSA). The annulus created from the HSA will be backfilled with a #2 sand pack from the well bottom to 12 inches above the well screen. A 36-inch bentonite seal will be installed above the sand pack. The annulus above the bentonite will be backfilled with a cement/bentonite grout up to 4 feet to allow for connection of piping to the well. After the piping connection has been made, the remaining annulus will be backfilled with sand and finished with an 8-inch watertight road box for the interior wells and a 12-inch watertight road box for the exterior wells. Cuttings generated from drilling will be placed on and under plastic sheeting and sampled for waste disposal. In addition, for each of the AS wells, a baseline groundwater sample will be collected for laboratory analysis and analyzed for CVOCs. ASW-1 and ASW-2 were installed for use in the Pilot Study, therefore only fifteen wells will need to be installed to complete the AS well network.

Well head details for the AS wells can also be found in Figure 8. As shown in the figure, all the wells will be finished below grade and the interior wells will be trenched to the nearest wall/beam and then piped overhead along the ceiling to the AS manifold, while the exterior wells will be piped approximately 3 feet below grade to the building and then overhead to the manifold.

3.4.2 Soil Vapor Extraction Wells

A schematic for the SVE construction is shown in Figure 9. The SVE wells will be constructed of 4-inch diameter schedule 40 PVC riser, with a 4 to 5-foot long (approximate), 40-slot, schedule 40 PVC screen. The SVE wells will be set a minimum of two feet above the observed groundwater table, estimated at a depth of 10 feet, to limit condensation and water "carry-over" in the vapor extraction pipes.

The SVE wells will be installed with a 6 $^5/_8$" ID HSA. The annulus created from the HSA will be backfilled with a #4 sand pack from the well bottom to 6 inches above the well screen. A 12 - 24-inch bentonite seal will be installed above the sand pack. The remaining annulus (once the piping connection has been made) will be backfilled with cement-bentonite grout. Cuttings generated from drilling will be placed on and under plastic sheeting and sampled for characterization and disposal if necessary. In addition, for each of the SVE wells, continuous soil samples will be collected during the well installation and screened with a PID. A minimum of 1 baseline soil sample will be collected from each well location during the well installation and analyzed for CVOCs. The soil samples with the greatest VOC concentrations as measured with the PID will be sent to the laboratory for analysis. Two of the SVE wells (SVE -1 and SVE-2) have already been installed and were used in the pilot study. Therefore only five wells will need to be installed to complete the SVE well network.

Well head details for the SVE wells can also be found in Figure 9. As shown in the figure, all seven wells will be finished below grade and trenched to the nearest beam/wall and then overhead along the ceiling to the SVE manifold or directly to the SVE/AS trailer.

3.4.3 Vapor Observation Wells

A schematic for the vapor observation well (VOW) construction is shown in Figure 10. Six SVMPs (SVMP-1 through 6) were installed for the pilot study. The SVMPs were constructed of 1-inch diameter, schedule 40 PVC riser with a 3-foot long, 10 slot, schedule 40 PVC screen. The wells were set at approximately 5 feet, and will allow for the measurement of soil vapor.

Two deep ASMPs (ASMP-1 and ASMP-2) were installed for the pilot study and were constructed of 1" diameter, schedule 40 PVC riser with a 10' long, 10 slot, schedule 40 PVC screen. The screen extended approximately 6'' into the observed water table to allow for monitoring ground water parameters. The upper portion of the screen will allow for the measurement of deep soil vapor.

Each VOW (ASMP and SVMP) was installed using hand auger or Geoprobe® methods. The annulus was filled with a #2 sand pack from the well bottom to approximately 6 inches above the well screen for SVMP's and 24 inches for ASW's. A bentonite seal was installed above the sand pack to 1 foot below the slab in the SVMP's. The ASMP's had a 24-inch bentonite seal and the remaining annulus was backfilled with a cement/bentonite grout. Cuttings generated from drilling were drummed and sampled for characterization. No COCs were detected in the samples and the soil was replaced onsite. In addition, for each of the VOW wells, soil samples were collected during the well installation at five-foot intervals and screened with a PID. The soil sample, with the greatest VOC concentration as measured with the PID, was sent to the laboratory for analysis of CVOCs. Refer to the Pilot Study discussion in Section 2.0 for results of the soil samples. No additional VOW's are required for the full scale SVE/AS system.

3.5 *REMEDIAL EQUIPMENT*

The major components of the proposed remedial system include:

- one AS compressor,
- one SVE blower,
- SVE/AS equipment enclosure,
- one AS manifold,

- one SVE manifold,
- one moisture separator,
- emissions control system,
- two air-cooled aftercoolers (1-AS blower and 1-SVE blower if treatment needed), and
- supporting instrumentation and remote-telemetry.

The equipment enclosure will provide acoustical/weather protection for the mechanical equipment.

Equipment specifications and operational curves for the major equipment items are included in Appendix D. A detailed equipment list for the AS system and SVE system is presented in Tables 7 and 8 respectively. Process & Instrumentation Diagrams for both systems can be found in Figures 11, 12, and 13.

3.5.1 Air Sparge System

The AS system design is based on a total maximum sparge flow of 15 scfm per well for a total flow of 255 scfm at a design pressure of 12 to 15 psig at the AS wells. ERM estimates that an AS flow rate of approximately 15 scfm per well is needed to effectively cover the contaminated area. To account for both the pressure drop in the AS manifold and distribution piping as well as seasonal liquid level fluctuations, the AS compressor is designed for a discharge pressure of 23.2 psig with relief valve set at 29.0 psig. The appurtenant AS equipment includes:

- a single AS compressor package consisting of a rotary claw compressor which will provide oil-free air at a design flow rate of 255 scfm at a pressure of 23.2 psig;

- acoustical/weather enclosure with forced air ventilation and a heater;
- pressure relief valve at 29.0 psig and a high pressure switch set at 30 psig;
- inlet and discharge silencers;
- inlet air filter;
- air-cooled aftercooler;
- high discharge temperature switch set at 140°F;
- temperature gauge downstream and upstream of the aftercooler;
- discharge pressure gauge with isolation valve;
- bleed-off valve with silencer; and
- control panel with: main disconnect switch, variable speed drive with pressure transmitter, start/stop/auto switch, run light, alarm/shutdown relays (including: high temperature and SVE blower alarm), alarm light (no audible alarm), and telemetry to notify operator of a system shutdown.

3.5.2 *SVE System*

Typically, the SVE flow capacity should be greater than 1.5 times the AS flow capacity (at a minimum) to ensure capture and that migration of AS vapors into the building is not occurring. Therefore, a design flow rate from each SVE well of 80 scfm (for a total flow of 560 scfm) should be sufficient in achieving pneumatic control. With a total AS flow rate of approximately 255 scfm the AS/SVE system design has an SVE/AS ratio of 2.2.

Based on the Pilot Study, it is anticipated that a vacuum at the extraction well in the range of 15 inches water column (w.c.) will produce 80 scfm. To account for pressure drop within the SVE piping, the moisture separator, and the air filter, the blower is designed for a vacuum of 50 inches of water at 560 scfm (see Appendix E for calculations).

To account for the observed pressure drop associated with the air emission control system (which will be installed on the discharge side of the SVE blower if needed), the blower will be designed for a minimum pressure of 4 inches water column.

The SVE equipment includes a single vacuum blower package consisting of a 20 HP regenerative blower with a design flow rate of 1000 scfm at a vacuum of 5 inches of water and a discharge pressure atmospheric. Based on the blower performance curves, the blower is capable of providing the desired flow rate of 560 scfm at approximately 50 inches of water and a discharge pressure of 2.89 psig. Appurtenant SVE equipment includes:

- acoustical/weather enclosure with forced air ventilation and a heater;
- inline air filter with inlet vacuum gauge;
- vacuum relief valve set at 6" Hg;
- high discharge temperature switch;
- high pressure/vacuum switch;
- inlet vacuum gauge;
- discharge pressure gauge;
- discharge temperature gauge;
- dilution air valve;
- bleed-off vent valve;

- moisture separator with a high level switch; and,
- control panel with: main disconnect switch, variable speed drive with vacuum transmitter, start/stop/auto switch, run light, alarm/shutdown relays (including: high temperature., high pressure/vacuum, high moisture separator liquid level), alarm light (no audible alarm), auxiliary shutdown signal to sparge blower, run-time meter, and remote telemetry unit to notify operator of a system shutdown.

3.5.3 *Emission Control System*

The analytical results obtained from the Pilot Study were used to calculate potential emissions resulting from the SVE blower exhaust. The total potential emissions were calculated and found to be below permitting requirements and the ASC was calculated and was an order of magnitude lower than the MASC. Based on these calculations, off-gas treatment is not required for this system. During initial startup of the system, samples of the blower exhaust will be collected weekly for the first 4 weeks and then monthly thereafter. After each sampling round, the ASC will be calculated and compared to the MASC to ensure that the system remains in compliance with the regulations. If the ASC exceeds the MASC at any time during the systems operation, the blower outlet will be diverted to carbon canisters. In addition, potential emissions will be calculated based on blower exhaust and compared to permitting requirements.

If required, the emission control system will consist of two carbon canisters connected in a series parallel sequence. Each canister will contain 170 pounds of activated carbon and rated for 300 scfm. The exhaust from the SVE blower will be connected to the two primary canisters. These canisters will be used to adsorb 99+% of TCE, DCE, and 1,1,1-TCA. The second set of canisters will be used to "polish" the

discharge from the first set, to ensure that the emissions remain below the MASC.

Once installed, the effluent from each carbon canister will be sampled and analyzed for CVOCs on a bi-weekly basis in order to detect initial breakthrough of the primary carbon canisters. Once breakthrough of the primary canisters occurs, the primary canisters will be removed from the system, the polish units placed in primary service, and a new canister will be added in its place. This ensures that there will always be a double level of protection against fugitive emissions. After initial breakthrough, the sampling protocol will be modified accordingly.

Note that vinyl chloride is a potential problem because it is not readily adsorbed onto granulated activated carbon (GAC). This may present an obstacle in that, although it has not been detected to date, it can be a byproduct of TCE degradation. The presence of vinyl chloride above the MASC could trigger a need to reevaluate the emission control system.

3.5.4 Piping Layout

The layout of the proposed field piping is presented in Figure 4. This figure, along with Figures 11 and Figures 12, indicate design pipe sizes and materials of construction.

3.5.4.1 Air Sparge System

Three-inch diameter, schedule 80 PVC piping will be installed to convey the air from the AS compressor enclosure to the AS manifold housed on a 6′ by 12′ wooden platform within the former plating area. The piping to the interior wells (ASW-2 through 10) will be 1.5-inch schedule 80 PVC run from the AS manifold to each well along the ceiling, down the wall/beam adjacent to the well and buried below the concrete slab to minimize obstruction to facility personnel. The piping to the exterior

wells (ASW-1 and ASW-11 through ASW-17) will be 1.5-inch schedule 80 PVC run from the manifold along the ceiling, down the wall, out the southern wall of the building, and buried below grade to the wells. The trenches will be backfilled around the pipes with non-cohesive material (granular fill/sand) and restored to original elevation. Excavated material will be placed on and under plastic sheeting and sampled for later waste disposal.

Downstream of the manifold, each line will have a minimum 3-foot length of straight piping to obtain an accurate flow measurement. Flow meters will be installed within these straight runs. In addition, each well will have an individual flow control valve and a pressure gauge. A temperature gauge will be located prior to the manifold. These instruments will allow monitoring of airflow rate and pressure to each AS well and will control the airflow to each well.

In addition, a union or other removable fitting will be provided at the inlet of the enclosure to allow for ease of installation.

3.5.4.2 SVE System

A three-inch diameter, schedule 40, PVC pipe was installed for the pilot study to convey the air from SVE-1 and SVE-2 to the SVE blower enclosure. These runs will remain in place for the full-scale system and will be manifolded at the SVE enclosure. The remaining wells, with the exception of SVE-3, which will be run directly back to the enclosure, will be supplied by a single 6-inch schedule 40 PVC line that will run from the enclosure to a manifold located on the platform, within the former plating area. As with the AS piping, all SVE piping will be installed from the manifolds overhead along the ceiling and run down the wall/beam adjacent to the well and buried below the concrete slab from the wall/beam to the well in order to minimize disruption to facility

personnel. Piping will be pitched to provide for draining of condensate towards the extraction wells.

The manifold at the enclosure, and the influent blower, inline filter, and moisture separator piping, will be constructed of 6-inch diameter schedule 80 PVC. Upstream of the manifold, a minimum 4-foot length of straight piping will be provided for each well to obtain an accurate flow measurement. Flow meters will be installed within these straight runs. In addition, a flow control valve and vacuum gauge will be installed. A temperature gauge will also be installed downstream of the split before and after the pump. This will allow monitoring of airflow rate and vacuum for each extraction well and control of the airflow from each well. Sample ports will also be installed in each run to allow for monitoring of CVOCs from each well.

Prior to the moisture separator, a dilution valve with an inlet silencer will be constructed of 4-inch schedule 80 PVC with a minimum of 4-foot length of straight pipe needed for accurate flow measurement. This will allow make-up air to be added to the system when needed.

At the specified operating conditions, it is anticipated (based on blower performance curves) that the temperature rise from the blower should not exceed 170 degrees Fahrenheit (F). Based on this information, the anticipated temperature on the outlet of the blower will be 230 degrees F (conservatively assuming an inlet vapor temperature of 60 degrees F). The use of PVC at temperatures approaching 230 degrees F is not acceptable. The piping from the blower discharge to the stack will be constructed of 4" diameter galvanized steel. The stack will be constructed of 4" diameter CPVC that is rated for up to 200 degrees F, or other appropriate material.

A union or other removable fitting will also be provided at the inlet of the enclosure to allow for ease of installation.

3.5.5 *Trailer Enclosure*

The SVE and the sparge blowers will be housed in a 6′ by 10′ trailer. The enclosure serves two purposes:

1. to protect mechanical equipment from the elements; and

2. to provide acoustical control of the mechanical equipment.

Figures 11 and 12 denote the equipment which will be acoustically controlled/weather protected.

The trailer will be placed on the Western Wall of the Site building as noted on Figure 4. The trailer will also be equipped with an electric heater to keep equipment from freezing and forced air ventilation to protect against overheating.

3.5.6 *Utility Requirements*

Electric service to the SVE/AS system will be provided by ERM. The electric service required includes 460volt, 3-phase, 100 amp service that will be installed with a separate CL&P meter. The 460VAC service will be extended to the equipment trailer and connected to a high voltage distribution panel (HVP) with a main breaker sized at 100Amperes to provide protection for the service entrance cable. The HVP will have adequate breaker space to provide independent 460VAC feeds to major equipment. A single pole breaker will feed a transformer to reduce the 277VAC, 1-phase to 240/120VAC, 1-phase. This transformer shall feed a low voltage panel with a 60Ampere main breaker. This panel will provide power for lighting, convenience outlets and miscellaneous electrical power needs.

4.0 *PROCESS CONTROL NARRATIVE*

4.1 *GENERAL PROCESS DESCRIPTION*

The SVE/AS remedial system will utilize AS to transfer VOCs from the saturated zone to the vadose zone while SVE will be used to capture VOCs generated from AS along with volatilizing compounds in the vadose zone. As discussed in Section 3, the major components of this remedial system include: one AS compressor, one SVE blower, one moisture separator, one air cooled aftercooler, and supporting instrumentation.

Electrical interlocks will connect all the major remedial system components. To ensure that all AS vapors will be captured by the SVE system, a shutdown of the SVE blower will cause a shutdown of the air AS compressor. Furthermore, an autodialer will alert operating personnel of any AS or SVE alarm conditions.

The following sections describe the operation and the automated functions of the process control system.

4.2 *AIR SPARGE SYSTEM*

4.2.1 *Basic Operation*

The AS system consists of a 30 Hp rotary claw compressor (C200) and appurtenant equipment. The purpose of this unit is to inject ambient air below the water table in order to volatilize contaminants.

The compressor and associated instrumentation will be located inside the AS/SVE equipment trailer. The compressor is capable of providing 255 scfm at a pressure of 23.2 psig. In order to optimize the compressor operation a variable speed drive (VSD200) equipped with a pressure

transmitter will be utilized to operate the compressor at a specified pressure and flowrate.

The AS compressor will draw in ambient air through an inlet filter/silencer (AF200). The filter will prevent particulate matter from entering and damaging the blower while the silencer will reduce the noise levels associated with the intake of ambient air. A similar silencer will be located at the discharge of the compressor. Based on the temperature rise curves, the air temperature could increase up to 250°F above ambient, which will require an aftercooler to be installed prior to the manifold. Due to the expected high air temperatures, galvanized pipe will be used to connect AS components prior to the aftercooler (AFC 200), which will cool the air to within 20°F of ambient, making it suitable for use with PVC. The cooled air will then be piped to the sparge wells. A temperature gauge will be installed upstream and downstream of the aftercooler to monitor its performance.

Several controls will be located at the discharge of the blower in order to monitor system operation, protect the equipment, and prevent the creation of hazardous situations.

In the event of elevated pressure due to failure of the variable speed drive, blocked piping, or other causes, the pressure transmitter (PT 201) will alarm the operator and a pressure relief valve (PRV200) will be used to release the sparge air to the atmosphere if the pressure exceeds 29.0 psig. If this relief valve still does not alleviate the elevated pressure at the compressor discharge, then the pressure and temperature of the discharge air will increase. If the pressure exceeds 30 psig then the high pressure switch (PSH 200) will shut down the AS compressor. Further, if the temperature of the discharge air exceeds 140°F then the high temperature switch (TSH200) located downstream of the aftercooler will shut down the AS compressor.

A check valve (CV200) will be installed to prevent the flow of air back towards the AS compressor when the compressor shuts down. Without this valve, the pressurized air in the piping system would begin to flow backwards during shut down, causing the compressor to rotate backwards.

A bleed-off valve/silencer (VV200/VS200) will be situated within the trailer before the piping goes to the manifold. This will provide a way to manually vent some or all of the sparge air to the atmosphere. The silencer will reduce the noise level of the exiting air. Opening this valve serves two purposes. First, the flow of air to the remediation area may be regulated. Second, when shutting off the sparge blower, the air in the piping that is downstream of the check valve will remain pressurized. The open vent provides a means of egress for this air, which will allow the piping to be depressurized.

Downstream of VV200, AFC200 will be installed and a pressure and temperature gauge (PG200-201, TG200-201) will be placed upstream and downstream of the unit respectively to monitor system operating conditions. From that point, three-inch schedule 80 PVC piping will feed the manifold inside the building. A flow meter (FMF201) and a butterfly valve (FCVF201) will be placed in the feed line to control total air flow to the manifold. At the manifold, this air flow will be split into seventeen (17) individual pipes. Each pipe will convey the sparge air to the sparge wells. To monitor the flow of air to a sparge well, a flow meter, FM201-217, will be installed in a straight length of pipe, at a minimum of 2 feet downstream of the manifold, and at a minimum of 10 inches upstream of butterfly valves FCV201-217. The butterfly valves (FCV201-217) will be used to regulate the flow of air to the individual AS wells, or to completely eliminate the flow of air to that well.

In order to inject air into a AS well, the air pressure must be greater than the hydrostatic pressure at the injection point. For example, if the injection point is ten feet below the water table, the minimum air pressure should be greater than 4.33 psig (i.e., 10 feet of water). It is necessary to apply slightly more than the hydrostatic pressure to account for friction losses and formation entry pressures near the injection point. To quantify these effects, a pressure gauge (PG201-217) will be situated downstream of the manifold.

4.2.2 *Shutdown and Alarm/Autodialer Conditions*

The air sparge system contains control features designed to protect the equipment and to ensure the safety of personnel. These controls and the resulting action are summarized in the following table:

AIR SPARGE SYSTEM CONTROL FEATURES

Control	*Triggering Mechanism*	*Setpoint*	*Action*
High Temperature Switch (TSH200)	Elevated Temperature at Blower Outlet	140°F	Shut down sparge blower Autodialer alarm
SVE System Operation	SVE Blower is Not Running	-	Shut down sparge blower Autodialer alarm
Pressure Relief Valve (PRV200) Pressure Transmitter(PT200)	High Pressure at Blower Outlet	29 psig	Sparge air is vented to atmosphere Autodialer alarm

High Pressure Switch (PSH200)	High Pressure at Compressor Outlet	30 psig	Shut down sparge blower Autodialer alarm

4.3 SOIL VAPOR EXTRACTION SYSTEM

4.3.1 Basic Operation

The capture of vapors generated from air sparging will be accomplished by the use of vapor extraction wells numbered SVE-1 through SVE-7.

The piping from each of the extraction wells will be manifolded together in two locations. SVE-1, SVE-2, SVE-3, and the 6-inch feed line will manifold at the SVE/AS enclosure, while SVE-4 through SVE-7 will manifold on the platform in the former plating room. On each of the SVE lines, prior to the manifold, a sampling port (SP301-307), vacuum gauge (VG301-307), flow meter (FM301-307), and a butterfly valve (FCV301-307) will be installed. The sampling port will consist of a ¼-inch petcock/ball valve and a ¼" x $^{3}/_{16}$" hose barb fitting. This port will be used to extract a vapor sample for analysis. The flow meter will be located in a straight length of pipe that is at least 3 feet downstream of the nearest fitting and at least 15 inches upstream of the butterfly valve. To regulate or completely shut off the flow to any extraction/feed line, the butterfly valves (FCV301-308) may be used.

After these valves, the feed line from the interior manifold and SVE-1, SVE-2, and SVE-3 will manifold together into a single header. The manifolded line will then pass through a butterfly valve (IV301), which can be used to completely stop vapor extraction, if necessary.

Downstream of IV301, a dilution valve (DV300) [equipped with silencer (DS300)] will be available to combine ambient air with the soil vapor. The dilution air may be used to adjust the flow of air from the vapor extraction piping. It may also be used to dilute extracted vapors in the event that the extracted vapor concentration approaches 25% of the lower explosive limit (LEL), although the potential for this is not anticipated at this site.

The combined air-vapor stream will then pass through a moisture separator (MS300). The moisture separator will remove any water droplets from the air stream. A sight gauge will indicate the liquid level inside the moisture separator, and a drain (IV302) will be located at the bottom of the separator to allow for manual draining of condensate. Condensate will be sampled and analyzed for waste disposal. However, draining the separator by gravity will only be effective for water levels greater than the vacuum in the separator. If the water level becomes too high in the separator, a liquid level switch (LSH300) will shut down the SVE blower.

A vacuum relief valve (VRV300) is located immediately downstream of MS300. This valve will automatically open if the system line vacuum exceeds 5 inches of HG. This condition could be caused by a failure of the variable speed drive, line blockage and/or excessive back pressure.

The air-vapor stream will pass a vacuum transmitter (VT300) after VRV300, which will be connected to the variable speed drive (VSD300) in order to optimize the operating condition of the blower based on applied vacuum. If the system vacuum reaches 6 in Hg, the system will alarm the operator, but not shutdown the blower.

Upstream, of VS300, an inlet air filter (AF300) will remove particulates from the incoming air stream. There will be vacuum gauge ports (VGP301-302) located on either side of AF300 to monitor particulate accumulation in the air filter. The air-vapor stream will then pass through the blower.

A temperature gauge (TPG302) and pressure gauge port (PGP300) will be located at the blower outlet for indication of the blower operating conditions. Valves (V300-301) will be located downstream of the blower to allow for connection to GAC.

A high temperature switch (TSH300) will be located at the blower outlet. This switch will shut down the SVE blower when the outlet temperature exceeds 240^{0}F. If carbon is used, sample ports (SP308-313) will be located at the inlet and outlet of each GAC unit to monitor efficiency. From that point, the air-vapor stream will ultimately be discharged through a 4-inch 15 -foot high CPVC (or other appropriate material) emission stack.

4.3.2 *Shutdown and Alarm/Autodialer Conditions*

The SVE system contains control features designed to protect the equipment and to ensure the safety of personnel. These controls and the resulting actions are summarized in the following table:

SVE CONTROL SYSTEM FEATURES

Control	*Triggering Mechanism*	*Setpoint*	*Action*
High Level Switch (LSH300)	High water level in moisture separator	80% capacity	Shut down SVE blower, Autodialer alarm
High Vacuum Switch (VS300)	High vacuum on SVE blower inlet	6 in Hg	Autodialer alarm
High Pressure Switch (PSH300)	High pressure at SVE blower outlet	3.0 psig	Autodialer alarm
Vacuum Relief Valve (VRV300)	Elevated vacuum on blower inlet	5 in Hg	Draw in ambient air, Autodialer alarm

High Temperature Switch (TSH300)	Elevated temperature at blower outlet	240°F	Shut down SVE blower Autodialer alarm

5.0 *SYSTEM OPERATION AND MAINTENANCE*

Upon initial startup of the system, ERM personnel will be onsite for the first three days taking measurements and adjusting the system to meet the design parameters. Once the system is adjusted and running properly, ERM personnel will conduct weekly monitoring for the first four weeks. After the first four weeks, ERM will decrease the monitoring frequency to monthly, unless system parameters indicate more frequent monitoring is required to maintain desired system operation parameters.

All monitoring events will include:

- Screening samples for CVOCs from SVE wells and SVE blower exhaust with a photo ionization detector and/or a flame ionization detector;
- Collecting a summa canister sample from each SVE well and the overall effluent with analysis for CVOCs;
- Collecting a groundwater sample via low flow techniques from ERM-6, ERM-11, and ERM-14 with analysis for CVOCs;
- Reading pressure, vacuum, flow, dissolved oxygen, depth to water and temperature gauges and recording data; and
- Adjusting system to meet design requirements as needed.

Data collected will be tabulated and compared to the performance, effectiveness, and system shutdown criteria after each monitoring round. Based on the data collected, ERM personnel will modify the system operation as needed to maintain an optimum mass removal rate and ultimately determine the shutdown criteria have been met.

APPENDIX A

Figures

Environmental
Resources
Management, Inc.

Intelidata
80 Pickett District Road
New Milford, CT

Figure 1:Site Location Map
ERM Project No. 0016718

From TOPO! CD ROM-CT
Scale 1:24,000
USGS Map: New Milford, CT

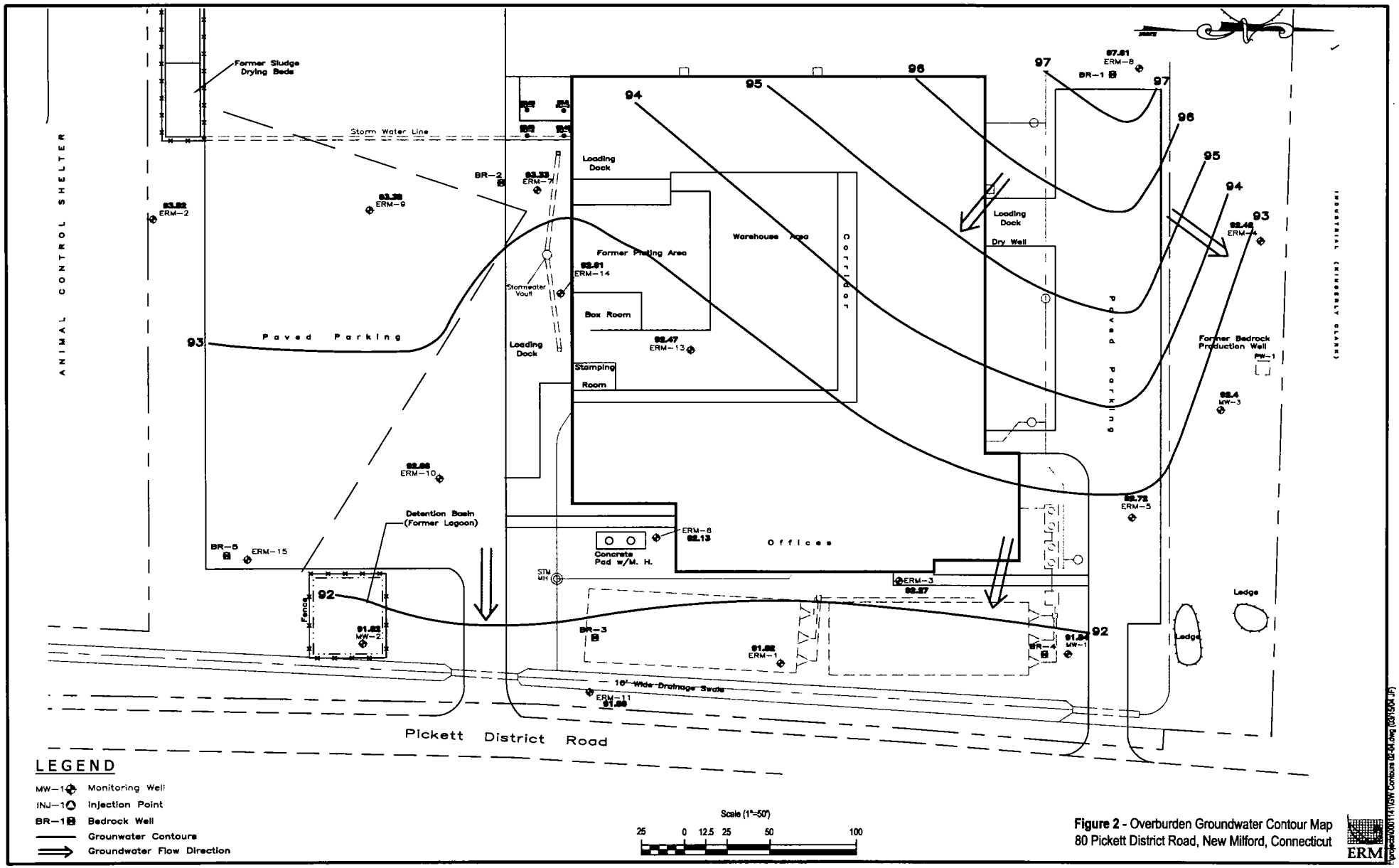

Figure 2 - Overburden Groundwater Contour Map
80 Pickett District Road, New Milford, Connecticut

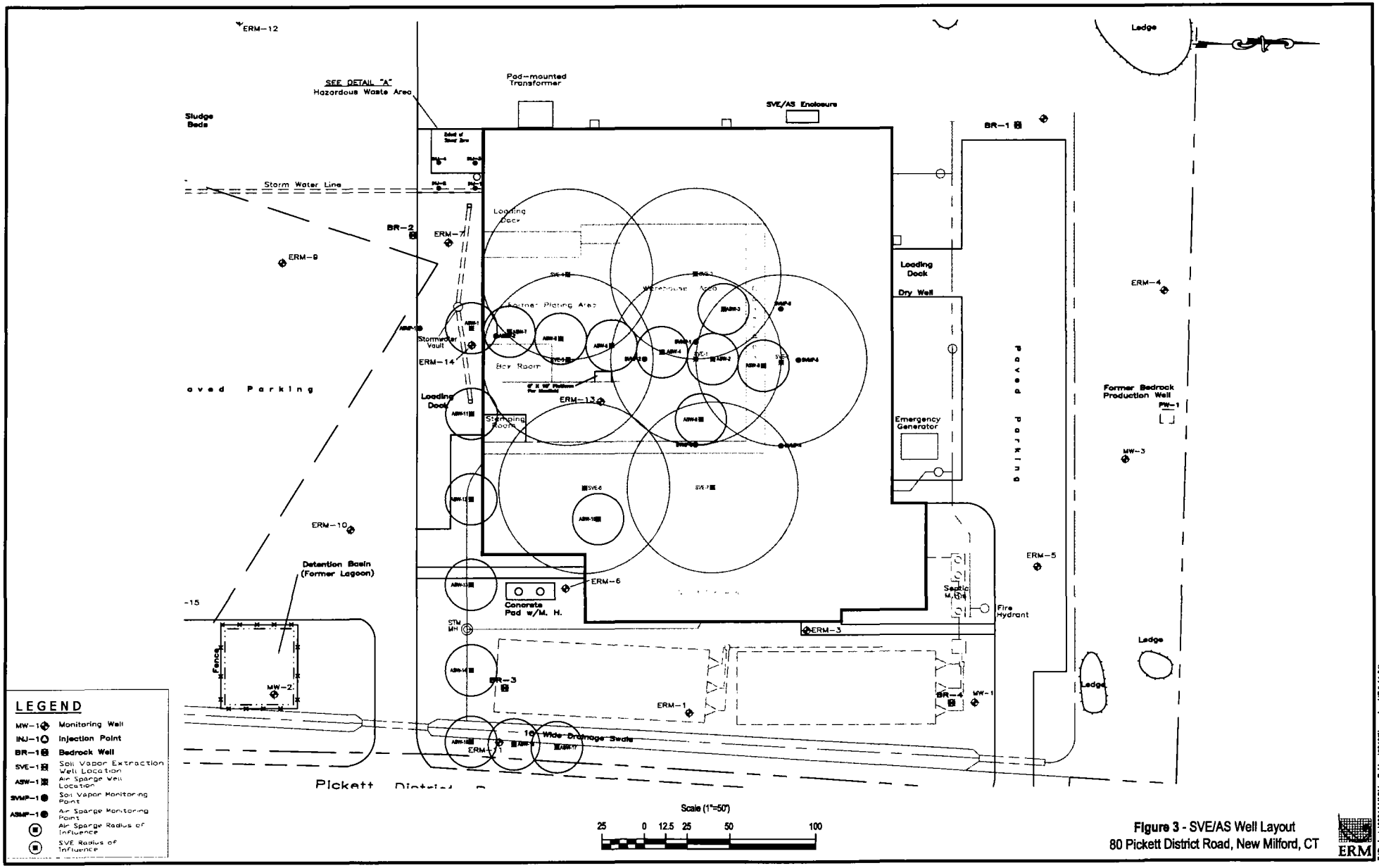

Figure 3 - SVE/AS Well Layout
80 Pickett District Road, New Milford, CT

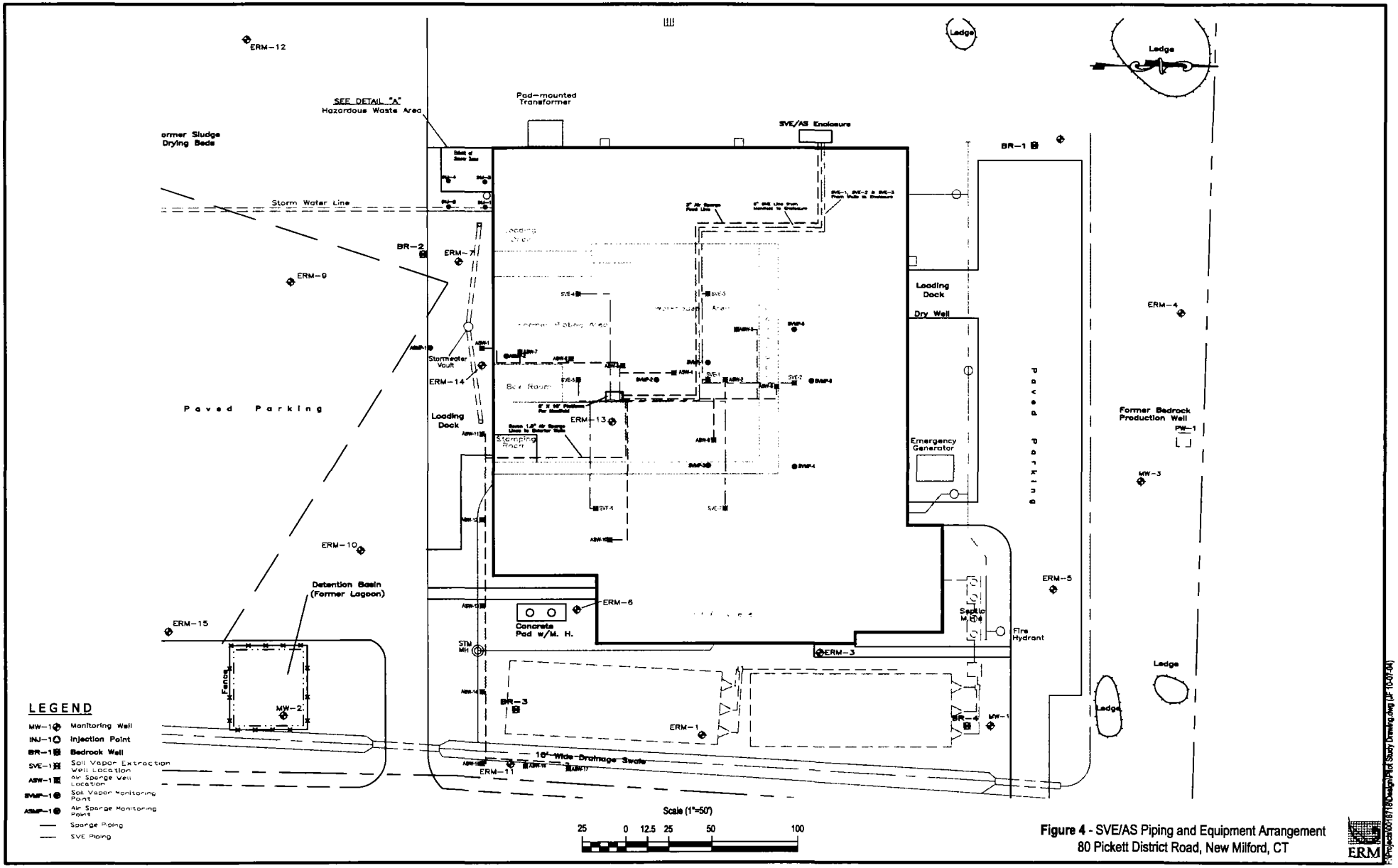

Figure 4 - SVE/AS Piping and Equipment Arrangement
80 Pickett District Road, New Milford, CT

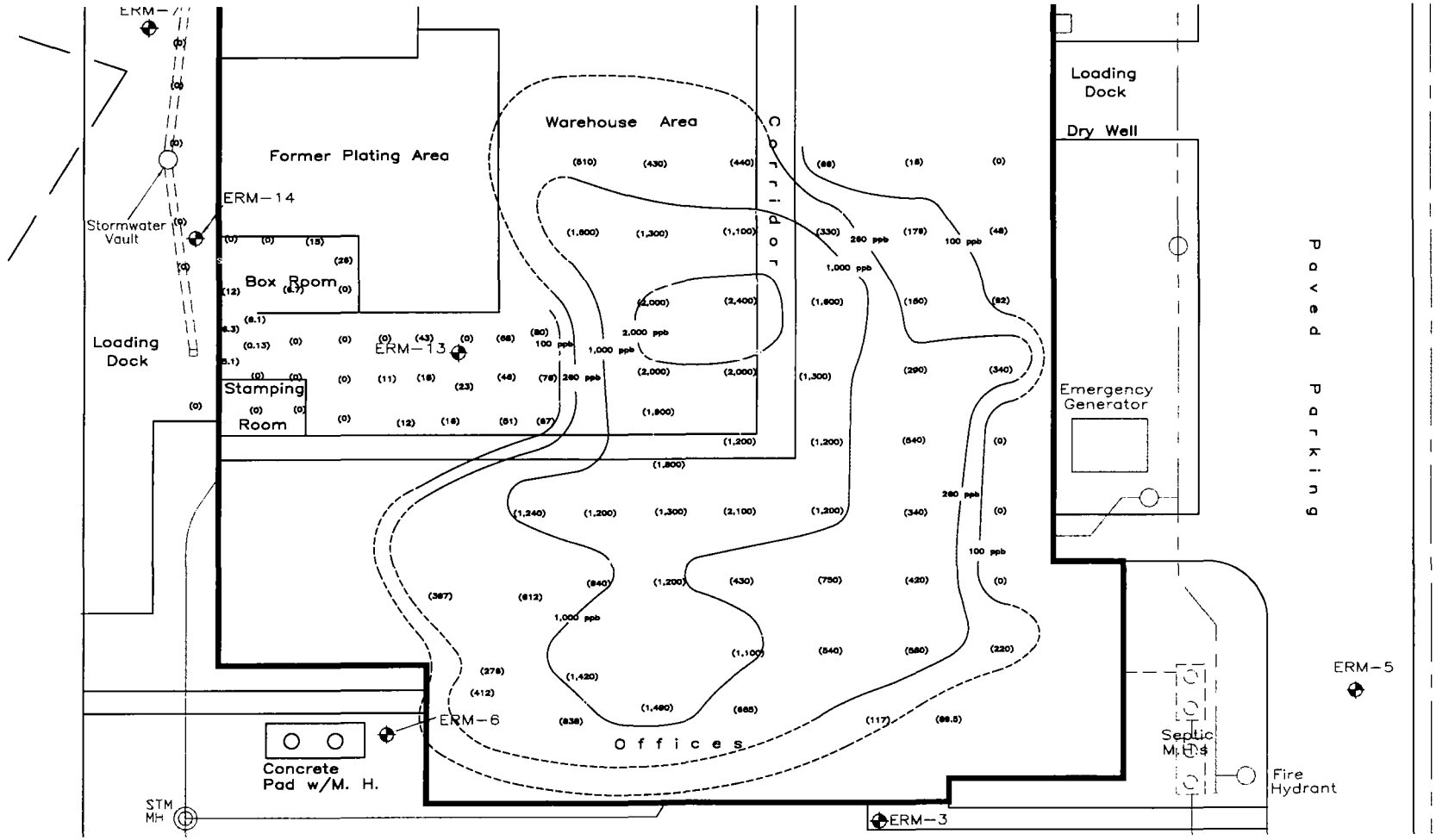

LEGEND

(45.0) TCE Concentration (ppb)

----- TCE Concentration Contours (Dashed where inferred)

Scale (1"=30')

15 0 7.5 15 30 60

Figure 5 - TCE Soil Vapor Concentration Contours
80 Pickett District Road, New Milford, CT

ERM

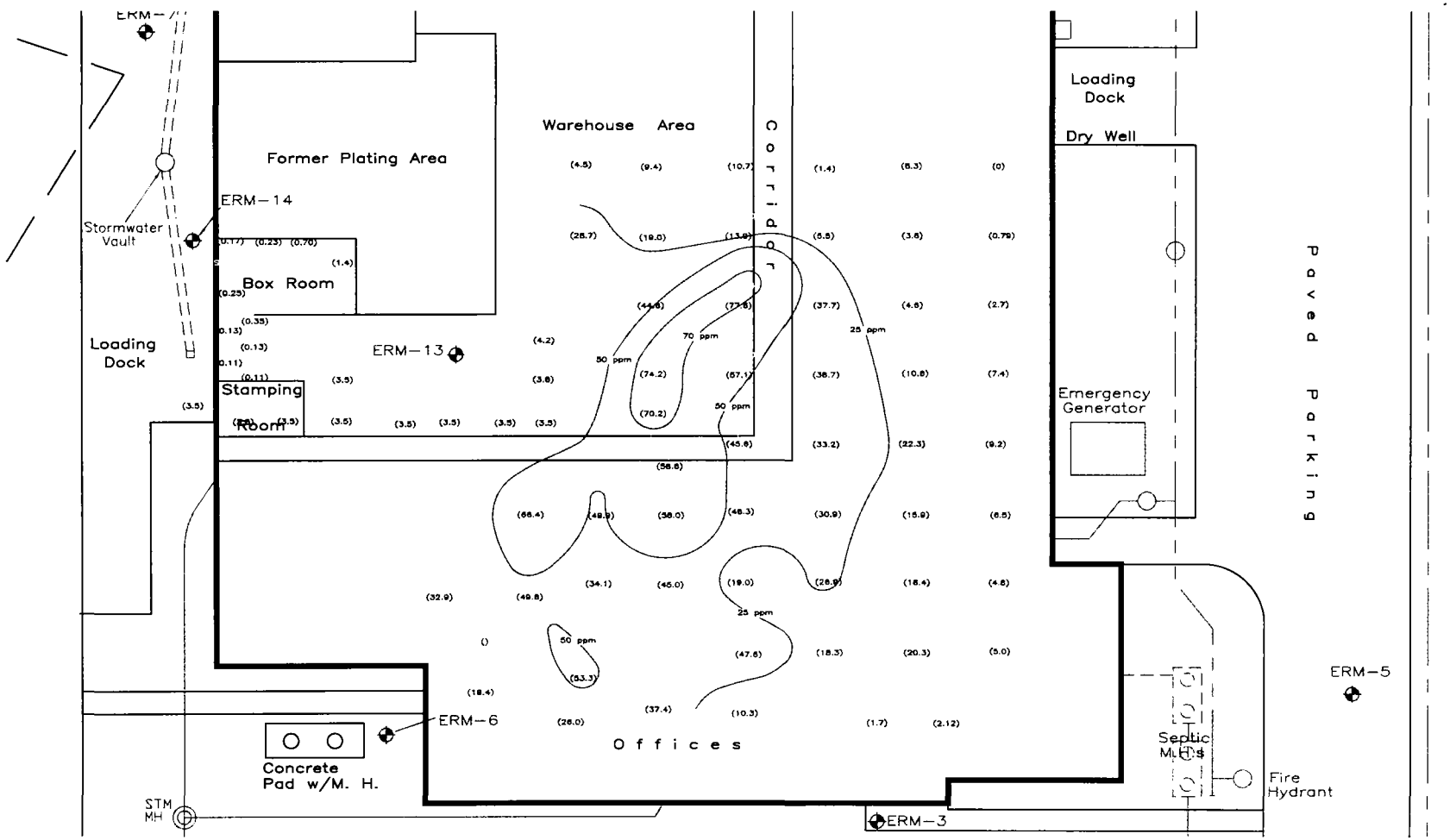

LEGEND

(45.0) TCE Concentration (ppb)

----- TCE Concentration Contours (Dashed where inferred)

Scale (1"=30')

15 0 7.5 15 30 60

Figure 6 - Total VOC Soil Vapor Concentration Contours
80 Pickett District Road, New Milford, CT

ERM

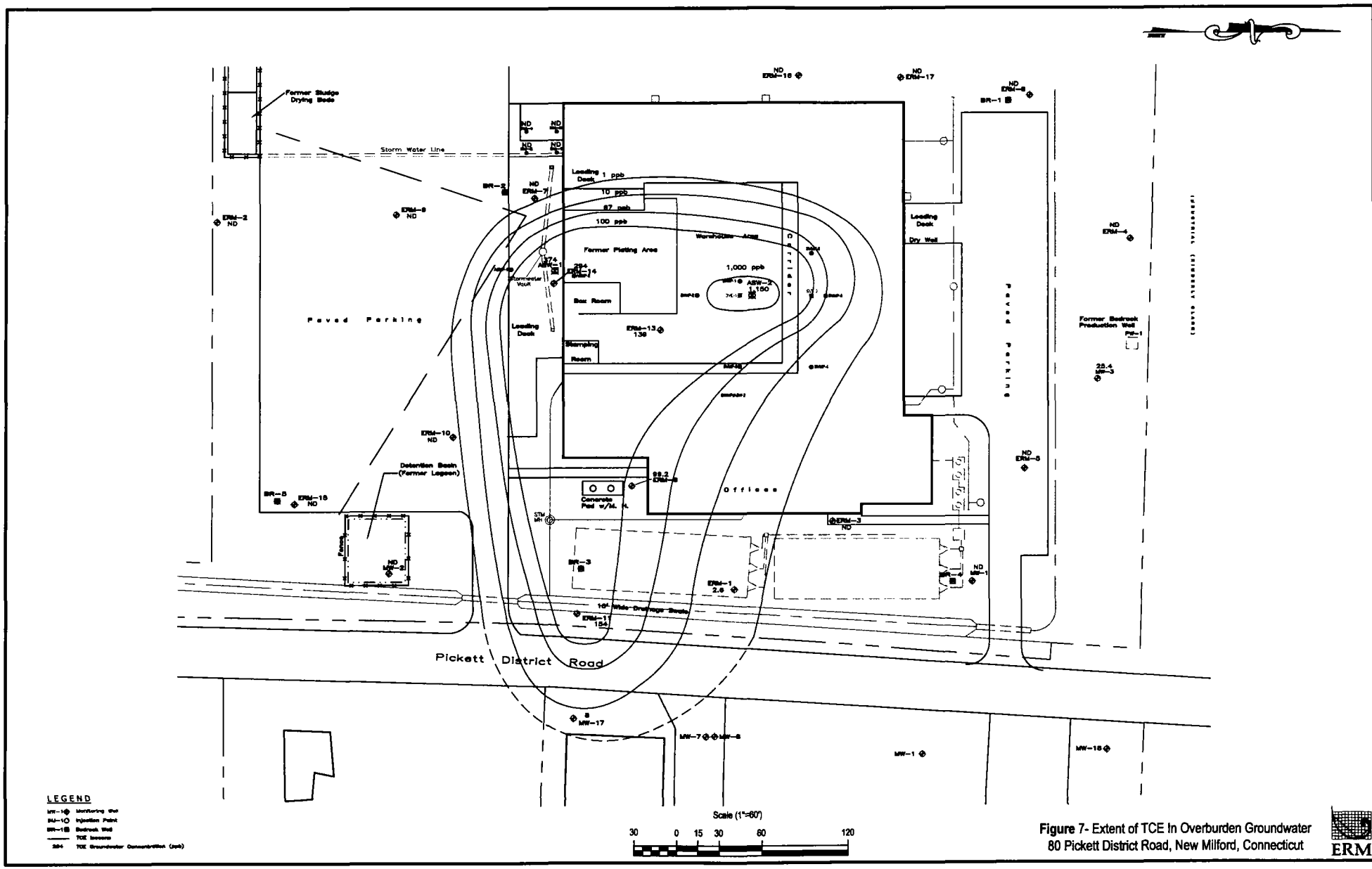

Figure 7- Extent of TCE In Overburden Groundwater
80 Pickett District Road, New Milford, Connecticut

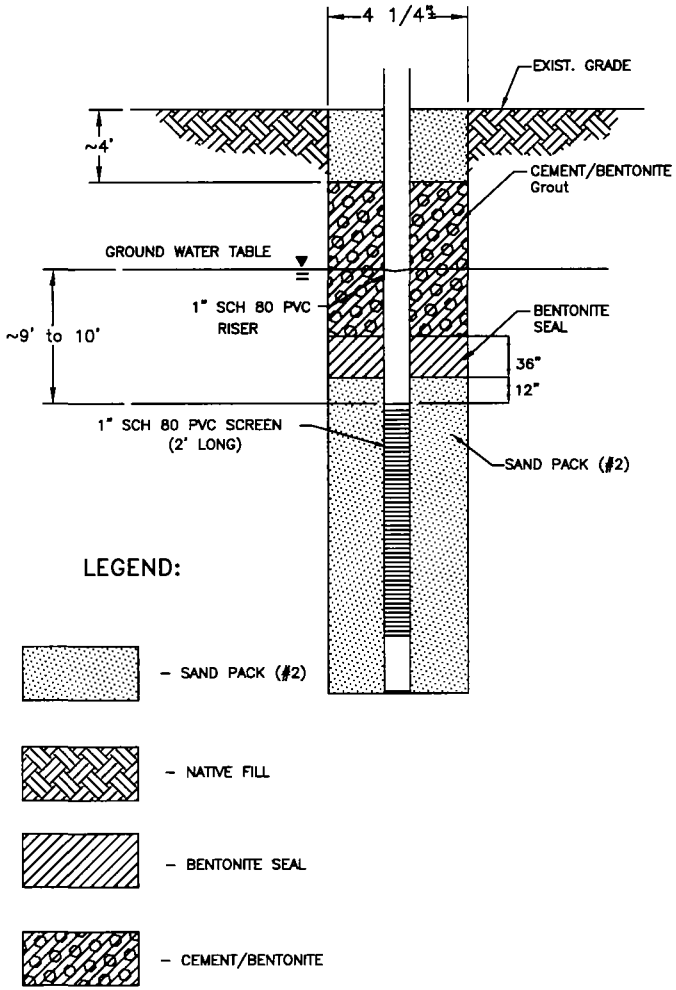

AIR SPARGE WELL SCHEMATIC
N.T.S.

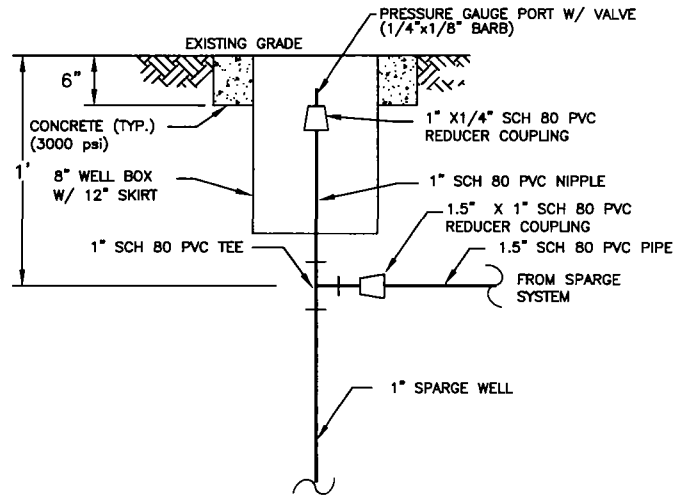

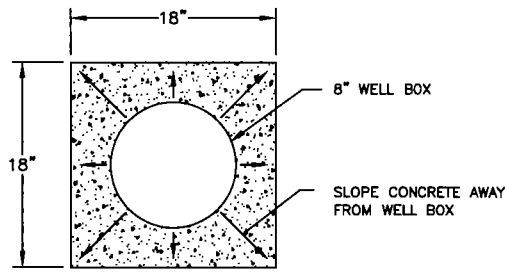

WELL HEAD DETAIL (EXTERIOR)
N.T.S.

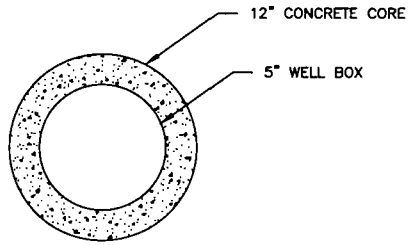

WELL HEAD DETAIL (INTERIOR)
N.T.S.

Figure 8 -Sparge Well Schematic/Well Head Details
80 Pickett District Road, New Milford, CT

ERM

F:\Projects\0016718\Design\Figure 8.dwg

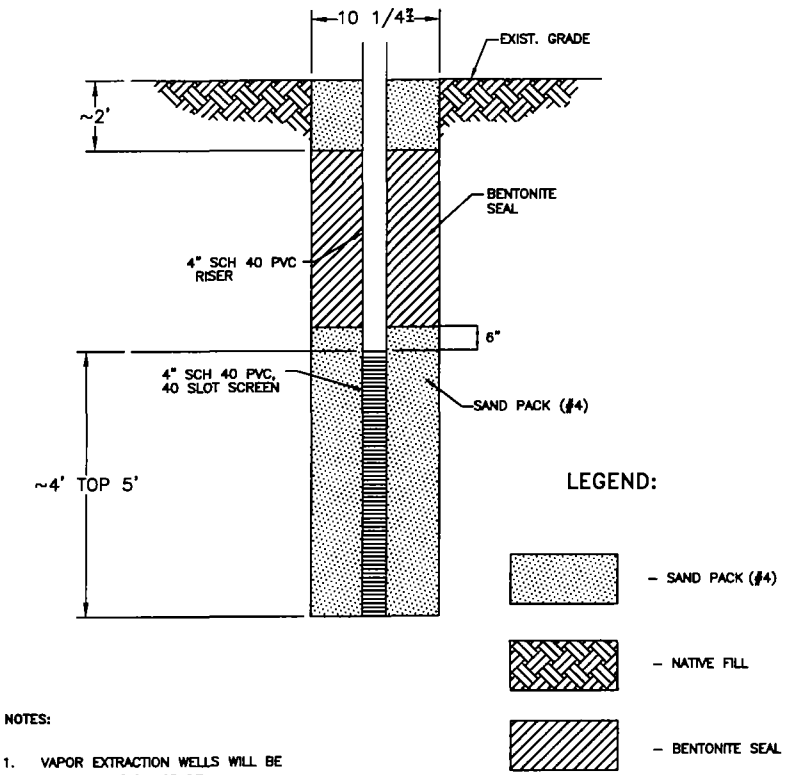

NOTES:

1. VAPOR EXTRACTION WELLS WILL BE FINISHED BELOW GRADE

SVE WELL SCHEMATIC

N.T.S.

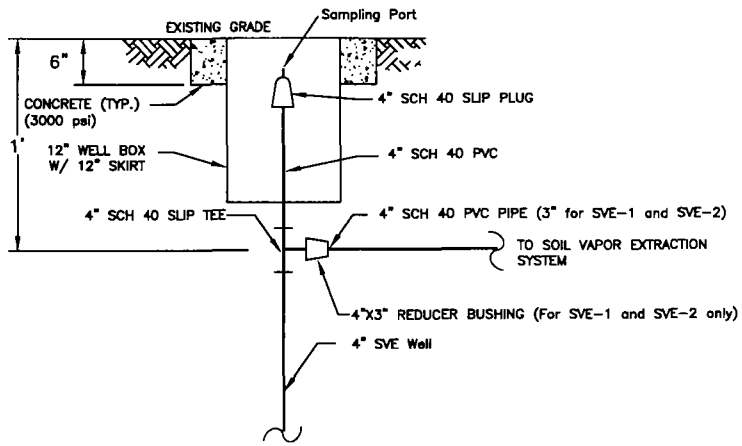

TYPICAL SVE WELL HEAD DETAIL (ONE-LINE)

N.T.S.

NOTES:

1. PIPING TO SOIL VAPOR EXTRACTION SYSTEM SHALL BE PITCHED TOWARDS THE WELL AT A MINIMUM OF 1/2%.
2. TAP SAMPLE PORT DIRECTLY INTO PVC.

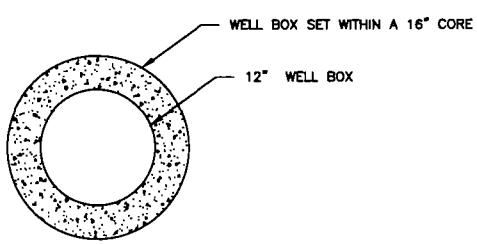

WELL HEAD DETAIL (ONE-LINE)

N.T.S.

Figure 9 - SVE Well Sechematic/Well Head Details
80 Pickett District Road, New Milford, CT

ERM

F:\Projects\0016718\Design\Figure 9.dwg

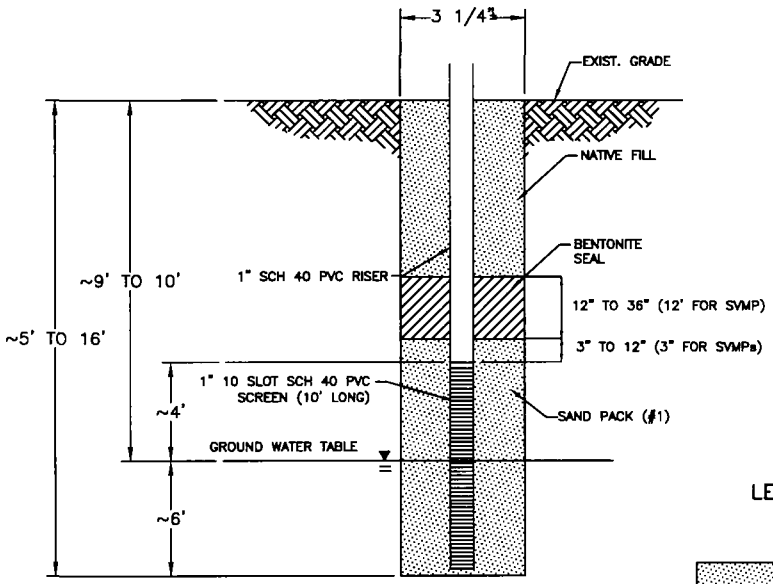

NOTES:

1. VAPOR OBSERVATION WELLS WILL BE FINISHED BELOW GRADE
2. DEPTH OF OVERBURDEN GROUNDWATER VARIES SEASONALLY
3. SHALLOW VOW (SVMPs) INSTALLED ~5' BELOW GRADE WITH 3" SCREEN

VABOR OBSERVATION WELL SCHEMATIC
N.T.S.

LEGEND:

- SAND PACK (#1)
- NATIVE FILL
- BENTONITE SEAL

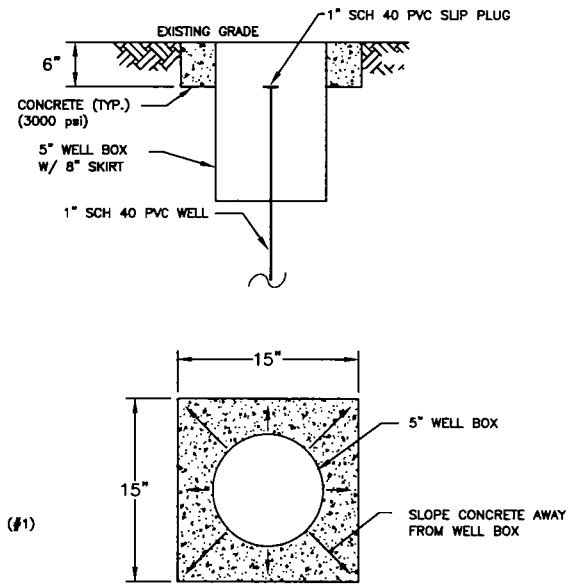

WELL HEAD DETAIL
N.T.S.

NOTES:

1. INTERIOR WELLS BOXES SET IN 10' CORED HOLE

Figure 10 -Vapor Observation Well Schematic/Well Head Details
80 Pickett District Road, New Milford, CT

ERM

F:\Projects\0016718\Design\Figure 10.dwg

LEGEND

TG	TEMPERATURE GAUGE
PG	PRESSURE GAUGE
VG	VACUUM GAUGE
DPG	DIFFERENTIAL PRESSURE GAUGE
TSH	TEMPERATURE SWITCH HIGH
PSH	PRESSURE SWITCH HIGH
LSH	LEVEL SWITCH HIGH
TAH	TEMPERATURE ALARM HIGH
PAH	PRESSURE ALARM HIGH
PAL	PRESSURE ALARM LOW
LAH	LEVEL ALARM HIGH
VRV	VACUUM RELIEF VALVE
PRV	PRESSURE RELIEF VALVE
AFC	AFTER COOLER
VSD	VARABLE SPEED DRIVE

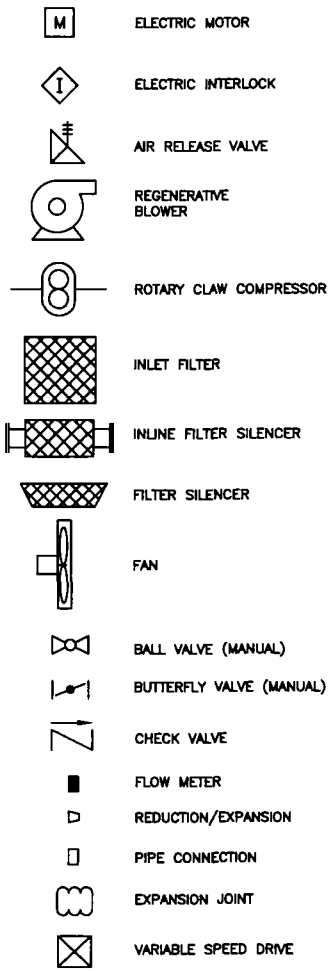

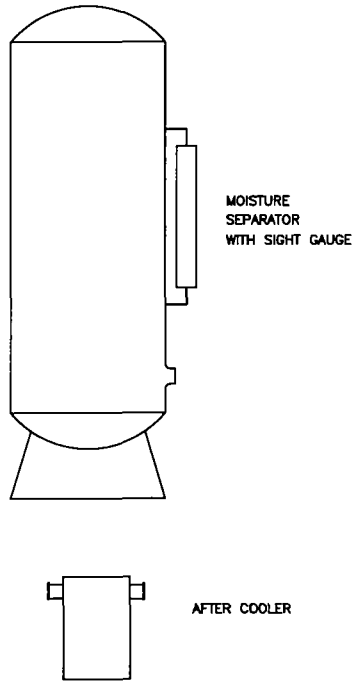

ABBREVIATIONS

GAC	GRANULAR ACTIVATED CARBON
MS	MOISTURE SEPARATOR
AF	AIR FILTER
B	BLOWER
VS	VENT SILENCER
VV	VENT VALVE
IV	ISOLATION VALVE
DV	DILUTION VALVE
CV	CHECK VALVE
SP	SAMPLE PORT
VGP	VACUUM GAUGE PORT
PGP	PRESSURE GAUGE PORT
E	ENCLOSURE
FM	FLOW METER
ASW	AIR SPARGING WELL
VEW	VAPOR EXTRACTION WELL
S/D	SHUT DOWN
FCV	FLOW CONTROL VALVE
EJ	EXPANSION JOINT
AFC	AFTER COOLER
PGF	PRESSURE GAUGE FEED
FCVF	FLOW CONTROL VALVE FEED
FMF	FLOW METER FEED

LINE TYPE IDENTIFICATION

- - - - - - ELECTRICAL
— · — — ENCLOSURE

Figure 11 - Process and Instrumentation Drawing, Symbols, and Legends
80 Pickett District Road, New Milford, CT

ERM

F:\Projects\0016718\Design\Figure 11.dwg

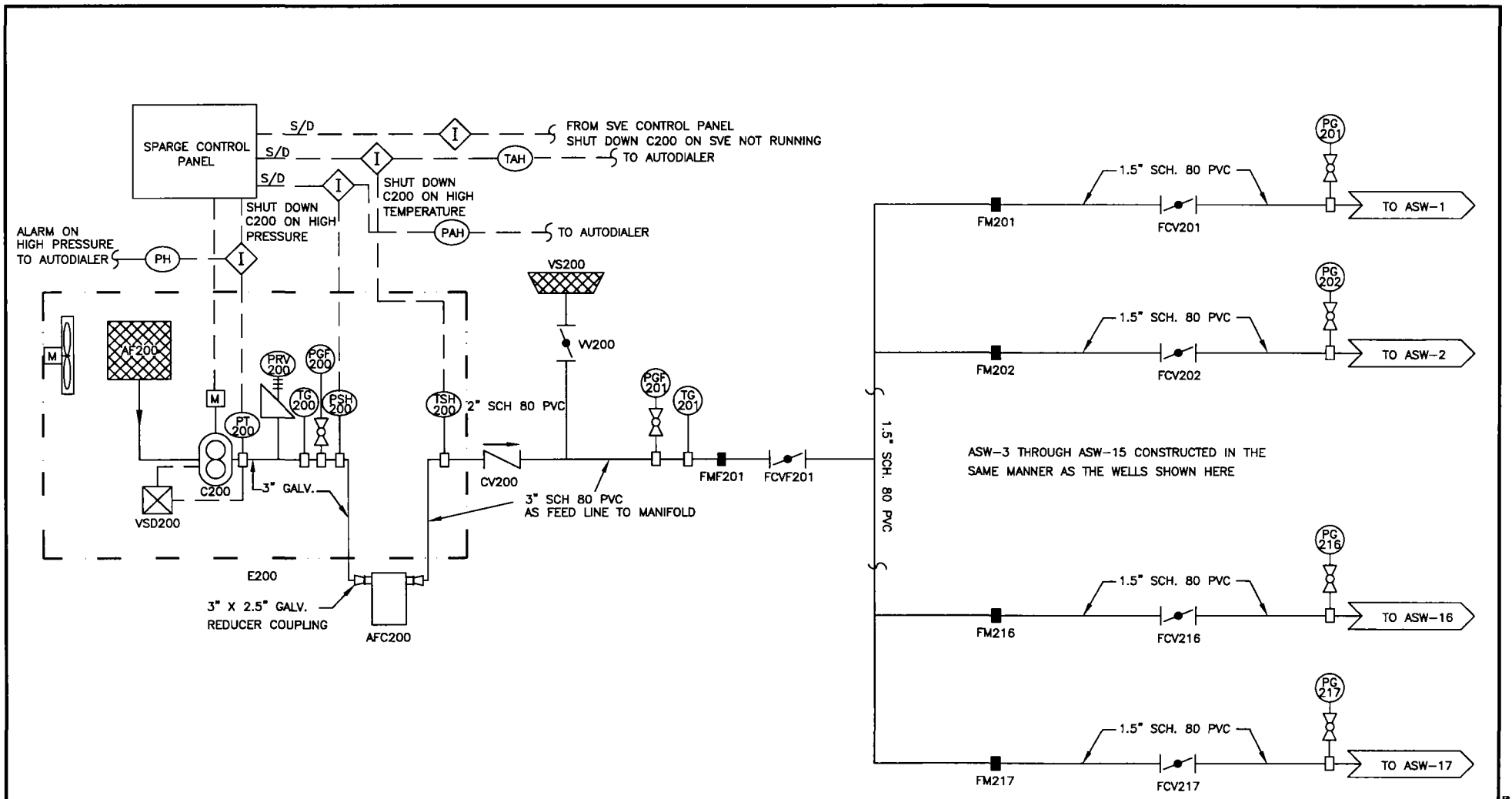

Figure 12 - Process and Instrumentation Drawing, Sparging System
80 Pickett District Road, New Milford, CT

ERM

F:\Projects\001678\Design\Figure 12.dwg

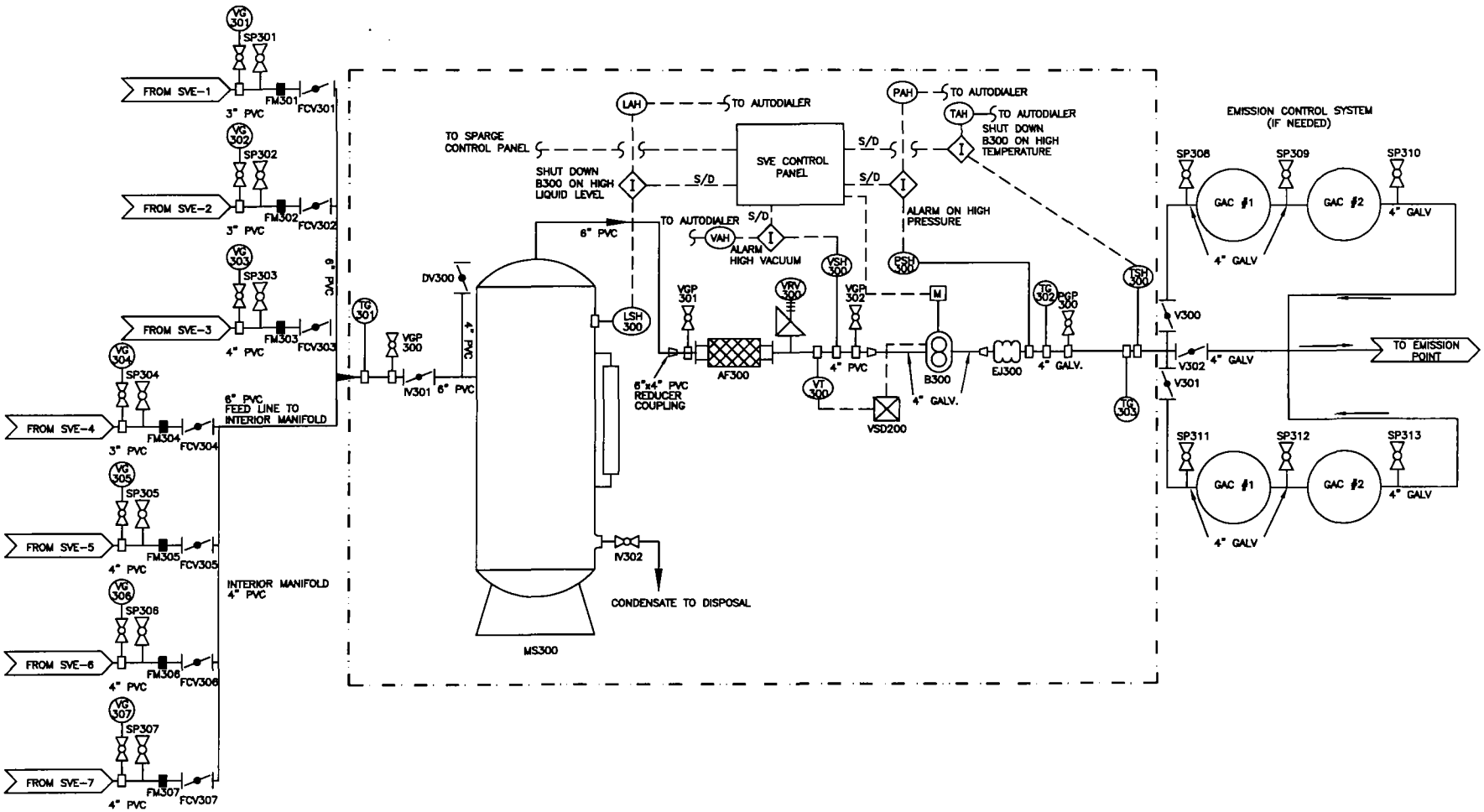

Figure 13 - Process and Instrumentation Drawing, SVE System
80 Pickett District Road, New Milford, CT

ERM

P:\Projects\Design\0018718\Figure 13.dwg

APPENDIX B

Tables

Table 1: Pilot Study Well Installation Soil Sample Results

Intelidata

80 Pickett District Road, New Milford, Connecticut

ERM ID #	RES DEC	IC/DC	GB PMC	SVE-1a	ASW-2a	SVMP-1a	SVE-2a	Svmp-3a	Svmp-4a
Date Sampled				6/11/2004	6/11/2004	6/11/2004	6/11/2004	6/12/2004	6/12/2004
Lab ID #				SA13928-01	SA13928-02	SA13928-03	SA13928-04	SA13928-05	SA13928-06
Sample Depth				4'	8.5'-9'	4'	3'-4'	3'-4'	3'-4'
Time Collected				9:50	11:40	13:50	14:20	10:00	9:10
VOCs (ug/kg)									
Acetone	500,000	1,000,000	140,000	139	BRL	175	171	152	212
2-Butanone	500,000	1,000,000	80,000	BRL	BRL	BRL	BRL	BRL	BRL
1,1,1 - Trichloroethane	500,000	100,000	40,000	BRL	BRL	BRL	BRL	12	BRL
Trichloroethene	56,000	520,000	1,000	BRL	BRL	BRL	BRL	BRL	BRL

ERM ID #	RES DEC	IC/DC	GB PMC	Svmp-5a	Svmp-6a	ASMP-2a	ASW-1a	Char Drum	Trip Blank
Date Sampled				6/11/2004	6/11/2004	6/12/2004	6/12/2004	6/14/2004	6/5/2004
Lab ID #				SA13928-07	SA13928-08	SA13928-09	SA13928-10	SA13928-11	SA13928-12
Sample Depth				3'-4'	3'-4'	9'	8'-9'	-	-
Time Collected				16:30	17:25	10:50	14:00	10:20	-
VOCs (ug/kg)									
Acetone	500,000	1,000,000	140,000	153	213	191	BRL	110	BRL
2-Butanone	500,000	1,000,000	80,000	BRL	BRL	BRL	BRL	75	BRL
1,1,1 - Trichloroethane	500,000	100,000	40,000	BRL	BRL	BRL	BRL	BRL	BRL
Trichloroethene	56,000	520,000	1,000	BRL	BRL	BRL	BRL	BRL	BRL

BRL - Below Reporting Limit

Table 2: SVE Operation Parameters

Intelidata

80 Pickett District Road, New Milford, Connecticut

Date	Time	Condition #	Hour Meter	Well ID	Applied Vac. (in w.c.), Flow (scfm), PID (ppmv)			Applied Vacuum (in w.c.)		Flow at Carbon Outlet (scfm)	Discharge Temp (F)	Comments
					Vac	Flow	PID	Before Filter	After Filter			
7/12/2004	-	1	8050.5	SVE-1	17	71.5	10.6	24	24	157	121	
7/12/2004	-	2	8051.2	SVE-1	27	102	12.5	44	41	43	126	
7/12/2004	-	3	8051.6	SVE-1	32	120	13.4	53	50	176	135	
7/12/2004	-	4	8051.9	SVE-1	40	146	19.3	66	66	155	136	
7/12/2004	-	5	8052.7	SVE-2	17	68	0.5	24	23.5	218	115	
7/12/2004	2:47	6	8053	SVE-2	25	104	0.9	42	40	175	127	
7/12/2004	2:57	7	8053.2	SVE-2	31	122	2.3	53	50	160	134	
7/12/2004	3:07	8	8053.3	SVE-2	38	147	3.5	69	65	145	137	
7/14/2004	-	9	8053.8	SVE-1	20	75	6.1	58	56	-	-	Both SVE Wells On
7/14/2004	-	-	-	SVE-2	20	83	-	-	-	135	143	
7/14/2004	9:52	9c	-	SVE-1	21	85	-	60	58	118	159	
7/14/2004	-	-	-	SVE-2	20	90	-	-	-	-	-	
7/15/2004	10:00	9d	8120.1	SVE-1	20.5	84.5	2	60	56	112	157	Running both for 4th day
7/15/2004	-	-	-	SVE-2	20	89.5	1	-	-	-	-	Temp is after carbon
7/19/2004	9:00	9e	8215.3	SVE-1	21	88	2.3	60	56	113	154.8	
7/19/2004	-	-	-	SVE-2	20.5	94	0	-	-	-	-	

Table 3: SVE Vacuum Response Measurements

Intelidata

80 Pickett District Road, New Milford, Connecticut

Date	Time	Operating Condition #	Vacuum Response at Well Head (in w.c.)		Vaccum Response (in w.c.) Distance from SVE-1/SVE-2 (feet)									
			SVE-1	SVE-2	SVMP-1	SVMP-2	SVMP-3	SVMP-4	SVMP-5	SVMP-6	ERM-13	ASMP-2	SVE-1	SVE-2
					10'/50'	30'/80'	50'/70'	70'/50'	60'/10'	58'/30'	60'/110'	120/	NA/50'	50'/NA
7/12/2004	-	1	11.5	-	1.1	0.36	0.18	0.2	0.16	0.215	0.2	0.09	NA	0.39
7/12/2004	-	2	18	-	1.7	0.6	0.22	0.3	0.23	0.2	0.3	0.145	NA	0.7
7/12/2004	-	3	22.8	-	2	0.65	0.3	0.34	0.26	0.33	0.34	0.17	NA	0.75
7/12/2004	-	4	27	-	2.4	0.8	0.36	0.4	0.35	0.4	0.45	0.2	NA	0.9
7/12/2004	-	5	-	9.5	0.28	0.095	0.14	0.26	0.5	0.34	0.09	0.04	0.55	NA
7/12/2004	-	6	-	14.5	0.42	0.165	0.175	0.37	0.8	0.55	0.13	0.07	0.8	NA
7/12/2004	-	7	-	17	0.55	0.175	0.22	0.45	0.9	0.65	0.17	0.07	0.9	NA
7/12/2004	-	8	-	22	0.6	0.22	0.25	0.6	1.1	0.8	0.185	0.08	1.05	NA
7/12/2004	15:30	9a	14	12	1.7	0.6	0.36	0.6	0.8	0.7	0.32	0.17	NA	NA
7/13/2004	9:20	9b	15	13	1.8	0.55	0.35	0.65	0.9	0.75	0.34	0.17	NA	NA
7/13/2004	14:30	12*	15	13	1.75	0.42	0.34	0.6	0.85	0.75	0.33	0.11	NA	NA
7/14/2004	9:52	14**	14.75	12.75	1.75	0.44	0.3	0.6	0.85	0.75	0.32	0.13	NA	NA

* During this condition the sparge well was on at 2 psi, 6 cfm

** During this condition the sparge well was on at 3 psi, 4.2 cfm

NA -- Not Applicable

Table 4: Pilot Study Soil Vapor Results

Intelidata

80 Pickett District Road, New Milford, Connecticut

ERM ID #	Res. DEC	I/C DEC	SVE-1	SVE-1	SVE-1	SVE-2	SVE-2	SVE-2	Effluent
Date Sampled			7/12/2004	7/14/2004	7/16/2004	7/12/2004	7/14/2004	7/16/2004	7/12/2004
Lab ID #			SA15209-01	SA15279-01	SA15509-01	SA15209-02	SA15279-02	SA15509-02	SA15209-03
VOCs (ug/kg)									
Dichlorodifluoromethane	**14,000**	**140,000**	BRL	BRL	BRL	BRL	BRL	BRL	0.84
1,1-Dichloroethane	**14,000**	**150,000**	209	139	BRL	BRL	BRL	BRL	BRL
1,2-Dichloroethane	**13**	**110**	BRL	BRL	BRL	BRL	BRL	**76.4**	BRL
1,1-Dichloroethene	**1,900**	**7,000**	**1,900**	155	2.12	76.8	6.96	57.8	0.96
cis-1,2-Dichloroethene	**3,400**	**35,000**	162	BRL	BRL	BRL	BRL	BRL	BRL
Methylene chloride	**650**	**6,800**	BRL	BRL	2.66	BRL	5.52	125	2.43
1,1,2-Trichlorotrifluoroethane	**50,000**	**120,000**	331	BRL	BRL	BRL	BRL	BRL	BRL
1,1,1 - Trichloroethane	**70,000**	**130,000**	**127,000**	15,900	156	5870	480	6030	0.84
Trichloroethene	**140**	**260**	**2,670**	**537**	23.8	**243**	51.3	**263**	BRL
Tetrachloroethene	**560**	**1,000**	394	555	3.09	BRL	6.32	308	BRL

BRL - Below Reporting Limits

Table 5: Indoor Air Sample Results

Intelidata

80 Pickett District Road, New Milford, Connecticut

ERM ID #	RES TAC	I/C TAC	Indoor	IND-1	IND-2
Date Sampled			7/15/2004	8/17/2004	8/17/2004
Lab ID #			SA15383-01	SA16775-11	SA16775-12
VOCs (ug/m^3)					
Chloromethane	14	80	1.49	BRL	1.32
Ethylbenzene	53	290	3.16	**85.41**	**19.38**
Methylene chloride	3	17	**50.4**	**339.95**	**230.91**
m,p-Xylene	220	500	12.79	**286.13**	63.30
Styrene	52	290	8.93	43.81	13.10
o-Xylene	220	500	4.21	91.48	16.13
1,3,5-Trimethylbenzene	9.3	52	9.29	**15.88**	7.13
4-Ethyltoluene	NE	NE	9.19	14.26	7.96
1,2,4-Trimethylbenzene	9.3	52	31.51	**50.14**	**30.58**
1,4-Dichlorobenzene	24	24	**25.07**	**46.41**	**45.57**
1,1,1 - Trichloroethane	500	500	74.5	10.42	5.73
Toluene	210	500	48.2	108.37	65.47
Tetrachloroethene	5	5	**17.97**	**103.07**	**73.24**
1,1,2-Trichlorotrifluoroethane (Freon 113)	NE	NE	BRL	9.58	BRL

BRL - Below Reporting Limits
NE - Criteria not established

Table 6: Post Pilot Study Sub-Slab Soil Vapor Sample Results

Intelidata

80 Pickett District Road, New Milford, Connecticut

ERM ID #	RES SVVC	Ind/Com SVVC	SVE-1	SVE-2	SVMP-1	SVMP-2	SVMP-3	SVMP-4	SVMP-5	SVMP-6	ASMP-2	ERM-13
Date Sampled			8/18/2004	8/18/2004	8/18/2004	8/18/2004	8/18/2004	8/18/2004	8/18/2004	8/18/2004	8/18/2004	8/18/2004
Lab ID #			SA16775-01	SA16775-02	SA16675-03	SA16775-04	SA16775-05	SA16775-06	SA16775-07	SA16775-08	SA16775-09	SA16775-10
VOCs (ppbv)												
1,1-Dichloroethene	**1,900**	**7,000**	138	122	193	384	259	223	27.1	6.20	101	1,620
1,1-Dichloroethane	**14,000**	**150,000**	BRL	BRL	BRL	BRL	BRL	BRL	BRL	BRL	585	455
Methylene chloride	**650**	**6,800**	35	BRL	90	BRL	BRL	BRL	10.6	1.51	BRL	BRL
cis-1,2-Dichloroethene	**3,400**	**35,000**	16	BRL	BRL	BRL	BRL	BRL	BRL	BRL	BRL	310
Tetrachloroethene	**560**	**1,000**	43	BRL	190	BRL	62	61	12.3	11.3	BRL	BRL
1,1,1 - Trichloroethane	**70,000**	**130,000**	2,960	2,670	4,280	11,200	6,480	4,850	468	138	5,680	45,700
Trichloroethene	**140**	**260**	**190**	**166**	**318**	**420**	**442**	**576**	73.8	47.8	68.7	**1,460**
1,4-Dichlorobenzene	**3,000**	**5,500**	BRL	BRL	BRL	BRL	BRL	BRL	3.26	1.71	BRL	BRL

BRL - Below Reporting Limts

Table 7: Air Sparge Parameters

Intelidata

80 Pickett District Road, New Milford, Connecticut

Date	Time	Operating Condition-Applied Sparge				Response in surrounding monitoring wells							
		#	Applied Pressure (psi)	Flow Rate (scfm)	Pressure at ASW-1 (in H2O)	Parameters	ASMP-1	ASMP-2	ERM-7	ERM-10	ERM-14	ERM-9	ERM-13
7/13/2004	9:20	9b	none	NA	NA	DTW (ft)	7.81	10.17	7.91	7.65	9.25	7.2	9.45
						DO	6.89	0.66	1.1	1.31	1.74	3.03	2.5
7/13/2004	11:03	10	6 to 2	4.25	32	DTW (ft)	7.78	10.16	7.96	-	9.24	-	9.44
						DO	7.34	-	0.44	-	1.8	-	-
						PID (ppm)*	-	-	-	-	-	-	-
						Pressure*	-	-	-	-	-	-	-
7/13/2004	11:30	11a	2	7.75	>100	DTW (ft)	7.8	-	7.96	-	9.21	-	-
						DO	7.33	-	0.33	-	1.92	-	-
						PID (ppm)*	-	-	-	-	-	-	-
						Pressure*	-	-	-	-	-	-	-
7/13/2004	13:25	12	2	6	86	DTW (ft)	7.78	10.14	7.89	7.63	9.22	7.2	9.42
						DO	4.02	0.43	0.41	0.6	0.65	2.87	2.87
						PID (ppm)*	0	0	0	0	0	0	0
						Pressure*	0.035	0.11	0.02	0.025	-0.065	-0.015	-0.33
7/13/2004	15:00	13	2	6	86	DTW (ft)	-	-	-	-	-	-	-
						DO	-	-	-	-	-	-	-
						PID (ppm)*	0.1	0	0.3	0	0	0	0.2
						Pressure*	0.03	0.05	0.04	0.015	0.04	0	0.02
7/14/2004	9:52	14	3	4.2		DTW (ft)	7.77	10.13	7.88	-	9.23	-	9.41
						DO	3.32	0.42	0.47	-	0.62	-	2
						PID (ppm)*	0	0	0	-	0	-	-
						Pressure*	0.02	0.025	0.02	-	0.03	-	-
7/15/2004	13:00	15	3	4.75	42	DTW (ft)	7.85	10.18	7.95	-	9.3	-	9.41
						DO	3.58	0.53	0.38	-	0.5	-	2.24
						PID (ppm)*	0.7	0	0	-	0	-	0
						Pressure*	0	0.01	0.01	-	0.03	-	0.02
7/19/2004	9:00	16	4	7.8	>100	DTW (ft)	7.91	10.27	8.02	-	9.35	-	9.51
						DO	3.08	0.63	0.5	-	0.55	-	2.54
						PID (ppm)*	0	0	0	-	0	-	0
						Pressure*	0	0.04	0.02	-	0.06	-	0.01

* Measurements taken with vaccum turned off

Table 8: Summary of Groundwater Sample Results from Air Sparge Wells

Intelidata

80 Pickett District Road New Milford, Connecticut

ERM ID #	SWPC	RES VC	I/C VC	ASW-1	ASW-1	ASW-2
Date Sampled				6/15/2004	7/20/2004	6/15/2004
Lab ID #				SA13918-01	SA15505-01	SA13918-02
Time Collected				9:30	8:00	10:35
VOCs (ug/kg)						
2-Butanone (MEK)	NE	50,000	50,000	1,040	BRL	BRL
1,1-Dichloroethane	NE	3,000	41,000	1,200	106	256
1,2-Dichloroethane	2,970	6.5	68	BRL	BRL	5.8
1,1-Dichloroethene	96	190	920	377	148	992
cis-1,2-Dichloroethene	NE	830	11,000	184	59	61
Methyl tert-butyl ether	NE	21,000	50,000	BRL	BRL	8
1,1,1 - Trichloroethane	62,000	6,500	16,000	12,900	5,410	10,300
Trichloroethene	2,340	27	67	374	136	1,150
Tetrachloroethene	88	340	810	43	BRL	27.9
1,1,2-Trichloroethane	1,260	220	2,900	6.6	BRL	9.3

BRL - Below Reporting Limits
NE - Criteria not established

Table 9: Air Sparge Equipment List

Intelidata

80 Pickett District Road, New Milford, CT

#	Item	Quant.	Tag Nos.	Manufacturer/Model	Description
1	Sparge Blower	1	B200	Rietschle DLR 400 30Hp claw typ e compressor	255 cfm at 23.2 psi, 230/460/3
3	Sparge Inlet Filter/Silencer	1	AF200		
4	Discharge Silencer	1			
5	8' x 20' Trailer	1	E200		Trailer Enclosure
6	Pressure Relief Valve	1	PRV200		set at 29 psig
7	Pressure Switch	1	PSH200		set at 30 psig
8	Check Valve	1	CV200		2" Swing Check
	After Cooler	1	AFC200	American Industrial ACA-4361 or comparable	Lower temp to within 20 deg F of ambient
9	Temperature Switch	1	TSH200		Set at 140 deg F
10	Vent Silencer	1	VS200		
11	Vent Valve	1	VV200		
12	Pressure Gauge	17	PG200 - PG217		0-25 psi
13	Temperature Gauge	2	TG200-201		
14	Flow Meter Feed	1	FMF200	AMETEK Rotron Model FM30C250Q, P/N 550605	50-250 SCFM
15	Flow Meter	17	FM201 - FM217	Dwyer Model RMC-122-SSV	2-20 scfm or other comparable
16	Flow Control Valve	17	FCV201 - FCV217		1.5" Butterfly Valves
17	Flow Control Valve Feed	1	FCVF200		3" Butterfly Valve
18	Variable Speed Drive	1	VSD200		Variable speed drive with pressure transmitter
19	Sparge Control Panel	1			

Table 10: SVE System Equipment List

Intelidata

80 Pickett District Road, New Milford, CT

#	Item	Quant.	Tag Nos.	Manufacturer/Model	Description
1	SVE Blower	1	B300	AMETEK Rotron Model EN979BK72WL, P/N 020724	20 hp, 230/460/3/60 or Equivalent Blower
2	Flow Meter	7	FM301-307	AMETEK Rotron Model FM30C250Q, P/N 550605	3" Direct read flow meter (50-250)
3	Flow Meter For Blower Inlet	1	FMI301	AMETEK Rotron Model FM40C850Q, P/N 550610	4" Direct read flow meter (170-850)
4	Inlet/Discharge Silencer	1			
5	Flow Control Valve	7	FCV301-307		3" or 4" Butterfly valves
6	Temperature Gauge	1	TG301-303		
7	Isolation Valve	1	IV301		4" Butterfly Valve
8	Dilution Valve	1	DV300		w/inline filter /silencer
9	Moisture Separator	1	MS300	AMETEK Rotron Model MS1000BS, P/N 038914	40 gallon capacity or equivalent can be used
10	Isolation Valve	1	IV302		1" Ball Valve
11	Liquid Level Switch	1	LSH300		
12	Vacuum Relief Valve	1	VRV300		5" Hg
13	Flow Switch	1	FSL300		
14	In-line Filter	1	AF300	AMETEK Rotron Model 516465	or equivalent
15	Pressure Switch	1	PSH300		Set @ 1.5 psig
16	Temperature Switch	1	TSH300		Set at 240F
17	Vacuum Switch	1	VSH300		5" Hg vacuum
18	Emission Control System	4	GAC #1, GAC #2,	Carbtrol G-2	will be installed if needed
19	SVE Control Panel	1		Nema	
20	Autodialer	1		Sensaphone 1104	4-channel
21	Vacuum Gauges	7	VG301-307		3/16" barb
22	Vacuum/Pressure Ports	4	VGP301-303, PGP 300		3/16" barb
23	Variable Speed Drive	1	VSD300		Variable speed drive with vacuum transmitter
24	Sample Ports	6	SP301=> SP310		3/16" barb

APPENDIX C

Well Construction Logs

ERM, Inc.

WELL : ASW-1

Two Hartford Square West, Hartford, CT (860) 524-5678

MONITORING WELL CONSTRUCTION LOG

Project Name & Location	Project No.	Water Level(s) (ft below top of PVC casing)			Total Depth of Well
Intelidata	16718				18'
Drilling Company	Foreman	Date	Time	Level (feet)	
ADT	Scott				
Drilling Equipment					
Geprobe 6610					
Date and Time of Completion	Geologist				
6/11/2004	Jason Fernet				

Generalized Soil Description	**Depth
	0.0
	3"
	1'
	12.5'
	14.5'
	18'

CONSTRUCTION DETAILS

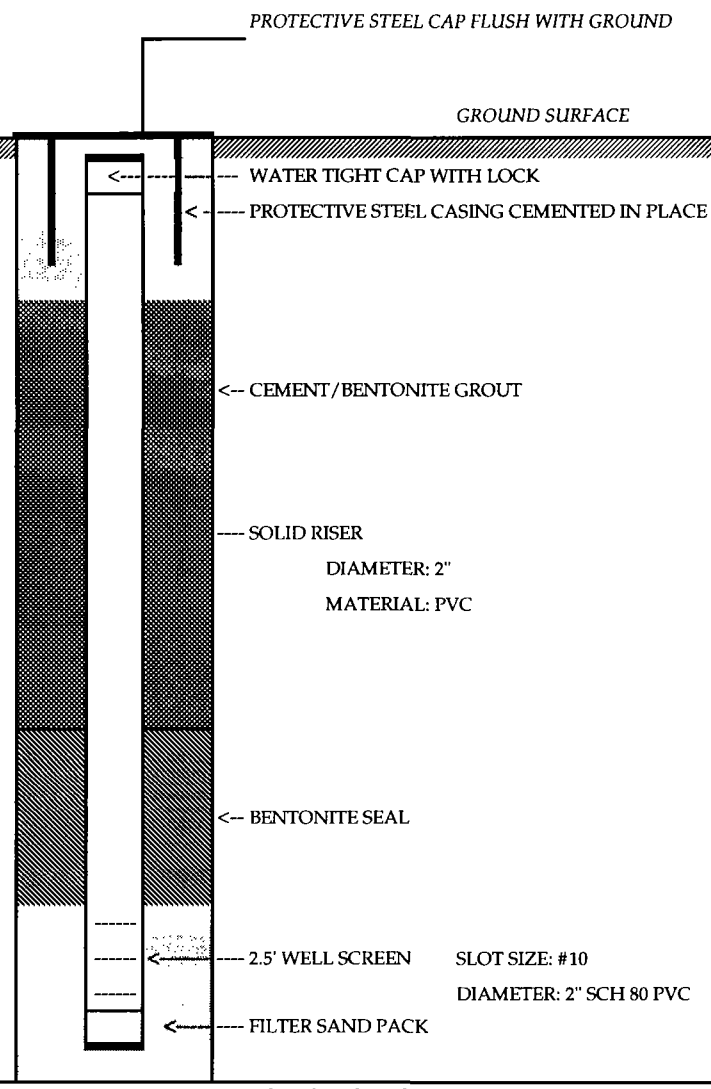

BOTTOM OF BOREHOLE

REMARKS Located northwest corner of facility in parking lot.

** Depth in feet below ground surface

ERM, Inc.

WELL : ASW-2

Two Hartford Square West, Hartford, CT (860) 524-5678

MONITORING WELL CONSTRUCTION LOG

Project Name & Location	Project No.	Water Level(s) (ft below top of PVC casing)			Total Depth of Well
Intelidata	16718				19'
Drilling Company	Foreman	Date	Time	Level (feet)	
ADT	Scott				
Drilling Equipment					
Geprobe 6610					
Date and Time of Completion	Geologist				
6/11/2004	Jason Fernet				

Generalized Soil Description	**Depth
	0.0
	3"
	1'
	14.5'
	16.5'
	19'

CONSTRUCTION DETAILS

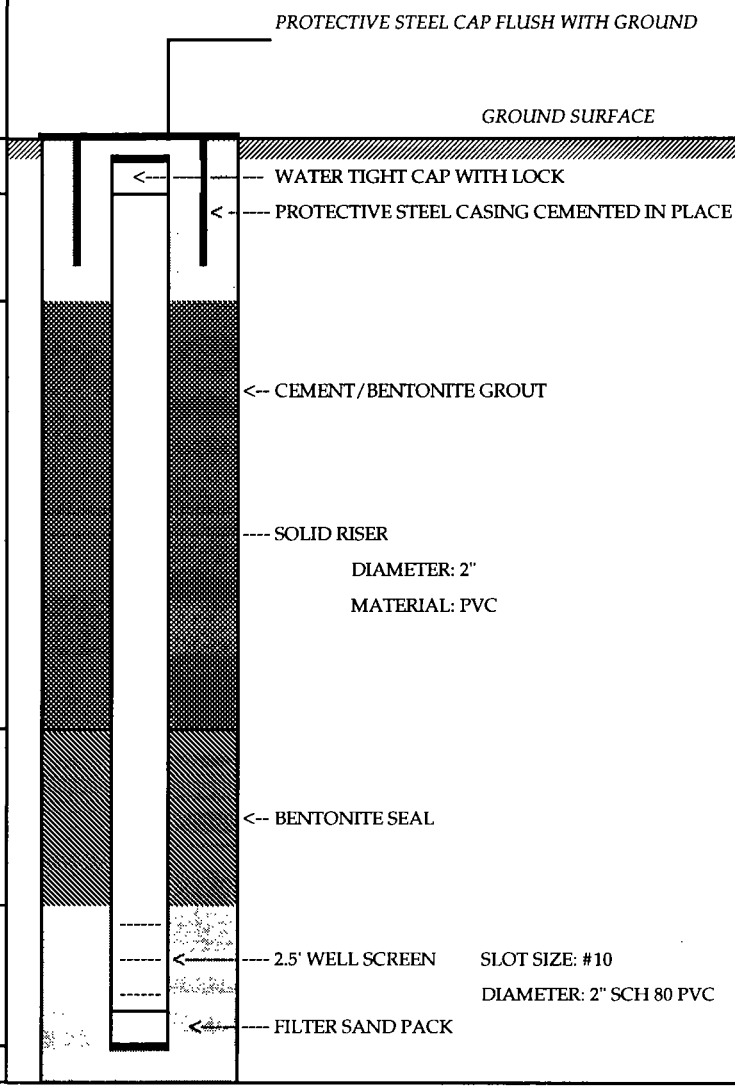

REMARKS _____

** Depth in feet below ground surface

ERM, Inc.

WELL : SVE-1

Two Hartford Square West, Hartford, CT (860) 524-5678

MONITORING WELL CONSTRUCTION LOG

Project Name & Location	Project No.	Water Level(s) (ft below top of PVC casing)			Total Depth of Well
Intelidata	16718				6.5'
Drilling Company	Foreman	Date	Time	Level (feet)	
ADT	Scott				
Drilling Equipment					
Geprobe 6610					
Date and Time of Completion	Geologist				
6/11/2004	Jason Fernet				

Generalized Soil Description	**Depth	CONSTRUCTION DETAILS
	0.0	PROTECTIVE STEEL CAP FLUSH WITH GROUND GROUND SURFACE
	3"	WATER TIGHT CAP WITH LOCK PROTECTIVE STEEL CASING CEMENTED IN PLACE
	1'	BENTONITE SEAL SOLID RISER DIAMETER: 4" MATERIAL: PVC
	2.5'	4' WELL SCREEN — SLOT SIZE: #40 DIAMETER: 4" SCH 40 PVC
	6.5	#4 FILTER SAND PACK BOTTOM OF BOREHOLE

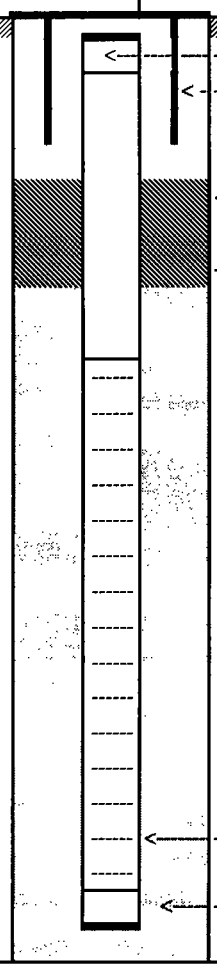

REMARKS

** Depth in feet below ground surface

ERM, Inc.

WELL : SVE-2

Two Hartford Square West, Hartford, CT (860) 524-5678

MONITORING WELL CONSTRUCTION LOG

Project Name & Location	Project No.	Water Level(s) (ft below top of PVC casing)			Total Depth of Well
Intelidata	16718				6.5'
Drilling Company	Foreman	Date	Time	Level (feet)	
ADT	Scott				
Drilling Equipment					
Geprobe 6610					
Date and Time of Completion	Geologist				
6/11/2004	Jason Fernet				

Generalized Soil Description	**Depth	CONSTRUCTION DETAILS
	0.0	PROTECTIVE STEEL CAP FLUSH WITH GROUND GROUND SURFACE
	3"	<-- WATER TIGHT CAP WITH LOCK < ---- PROTECTIVE STEEL CASING CEMENTED IN PLACE
	1'	<-- BENTONITE SEAL
	2.5'	---- SOLID RISER DIAMETER: 4" MATERIAL: PVC
	6.5	<---- 4' WELL SCREEN SLOT SIZE: #40 DIAMETER: 4" SCH 40 PVC <---- #4 FILTER SAND PACK BOTTOM OF BOREHOLE

REMARKS

** Depth in feet below ground surface

APPENDIX D

Catalog Cuts

EN 979 & CP 979
Sealed Regenerative Blower w/Explosion-Proof Motor

FEATURES
- Manufactured in the USA – ISO 9001 compliant
- Maximum flow: 1000 SCFM
- Maximum pressure: 90 IWG
- Maximum vacuum: 5" Hg (70 IWG)
- Standard motor: 20 HP, explosion-proof
- Cast aluminum blower housing, cover, impeller & manifold; cast iron flanges (threaded); teflon lip seal
- UL & CSA approved motor with permanently sealed ball bearings for explosive gas atmospheres Class I Group D minimum
- Sealed blower assembly
- Quiet operation within OSHA standards

MOTOR OPTIONS
- International voltage & frequency (Hz)
- Chemical duty, high efficiency, inverter duty or industry-specific designs
- Various horsepowers for application-specific needs

BLOWER OPTIONS
- Corrosion resistant surface treatments & sealing options
- Remote drive (motorless) models
- Slip-on or face flanges for application-specific needs

ACCESSORIES (See Catalog Accessory Section)
- Flowmeters reading in SCFM
- Filters & moisture separators
- Pressure gauges, vacuum gauges & relief valves
- Switches – air flow, pressure, vacuum or temperature
- External mufflers for additional silencing
- Air knives (used on blow-off applications)
- Variable frequency drive package

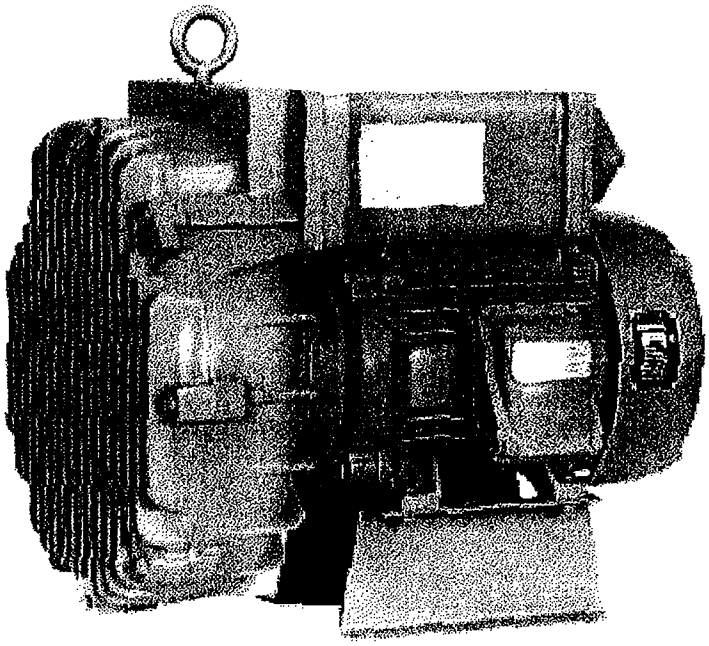

BLOWER PERFORMANCE AT STANDARD CONDITIONS

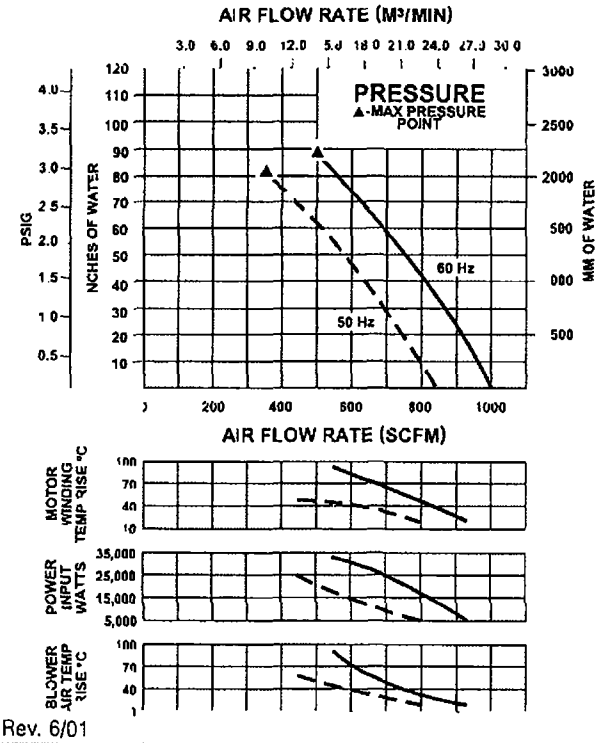

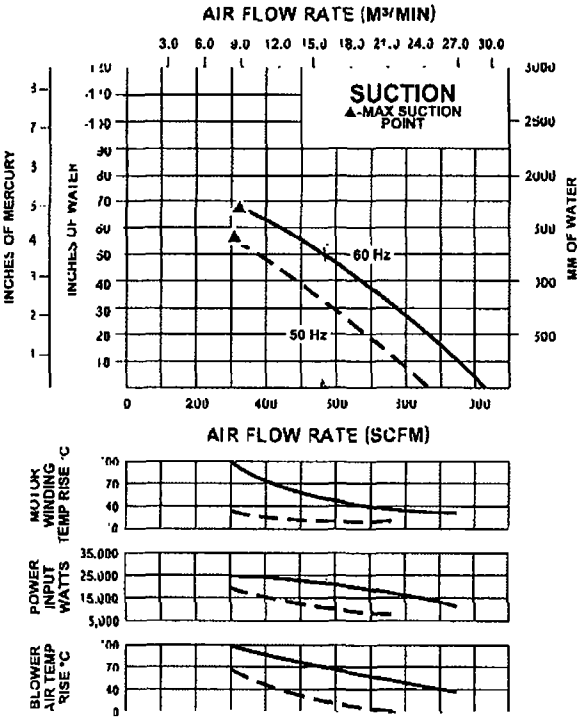

Rev. 6/01

EN 979 & CP 979
Sealed Regenerative Blower w/Explosion-Proof Motor

Scale CAD drawing available upon request.

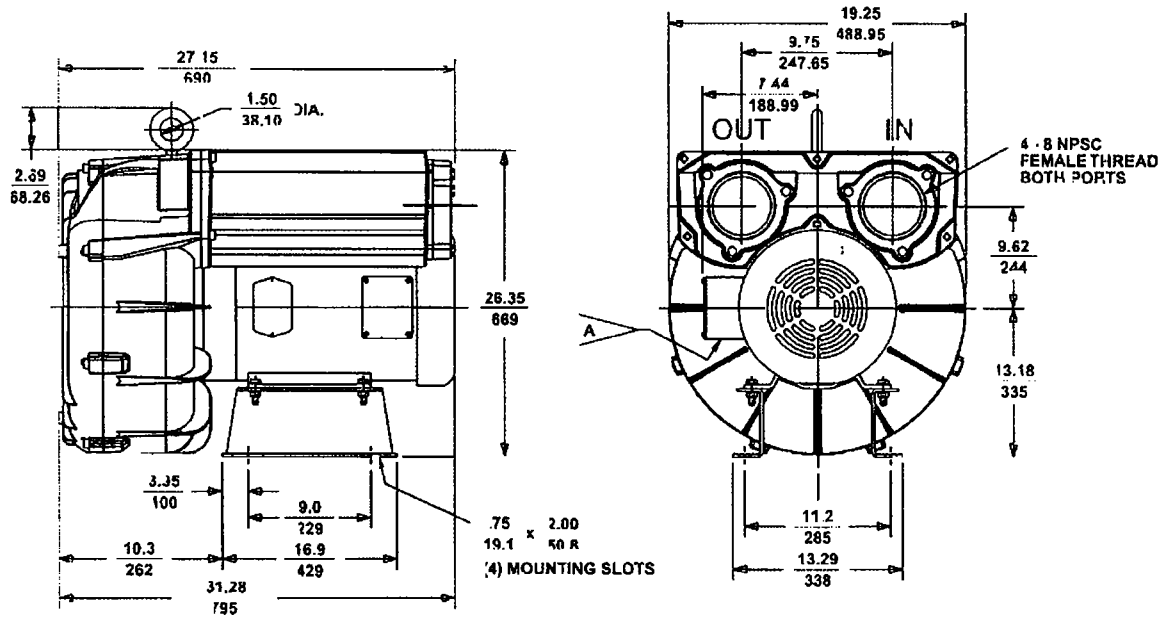

DIMENSIONS: IN / MM
TOLERANCES: .XX ± .1 / 2.5
(UNLESS OTHERWISE NOTED)

A TERMINAL BOX CONNECTOR HOLE 1.09 / 27.7 DIA.

SPECIFICATIONS

MODEL	EN979BK72WL		EN979BK86WL	CP979GB72WLR
Part No.	080724		—	—
Motor Enclosure – Shaft Material	Explosion-proof – **CS**		Explosion-proof – **CS**	Chem XP – **SS**
Horsepower	20		20	Same as EN909BG72WL – 038629 except add Chemical Processing (CP) features from catalog inside front cover
Phase – Frequency [1]	Three - 60 Hz		Three - 60 Hz	
Voltage [1]	230	460	575	
Motor Nameplate Amps	46	23	18.4	
Max. Blower Amps [3]	60	30	24	
Inrush Amps	294	147	118	
Starter Size	3	2	2	
Service Factor	1.0		1.0	
Thermal Protection [2]	Class B - Pilot Duty		Class B - Pilot Duty	
XP Motor Class – Group	I-D, II-F&G		I-D, II-F&G	
Shipping Weight	650 lb (295 kg)		650 lb (295 kg)	

[1] Rotron motors are designed to handle a broad range of world voltages and power supply variations. Our dual voltage 3 phase motors are factory tested and certified to operate on both: **208-230/415-460 VAC-3 ph-60 Hz** and **190-208/380-415 VAC-3 ph-50 Hz**. Our dual voltage 1 phase motors are factory tested and certified to operate on both: **104-115/208-230 VAC-1 ph-60 Hz** and **100-110/200-220 VAC-1 ph-50 Hz**. All voltages above can handle a ±10% voltage fluctuation. Special wound motors can be ordered for voltages outside our certified range.

[2] Maximum operating temperature: Motor winding temperature (winding rise plus ambient) should not exceed 140°C for Class F rated motors or 120°C for Class B rated motors. Blower outlet air temperature should not exceed 140°C (air temperature rise plus inlet temperature). Performance curve maximum pressure and suction points are based on a 40°C inlet and ambient temperature. Consult factory for inlet or ambient temperatures above 40°C.

[3] Maximum blower amps corresponds to the performance point at which the motor or blower temperature rise with a 40°C inlet and/or ambient temperature reaches the maximum operating temperature.

Data

Rietschle

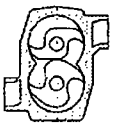

Compressors | Compresores | Compresseurs | Compressores

DLR

ZEPHYR

- DLR 100
- DLR 250
- DLR 300
- DLR 400
- DLR 500

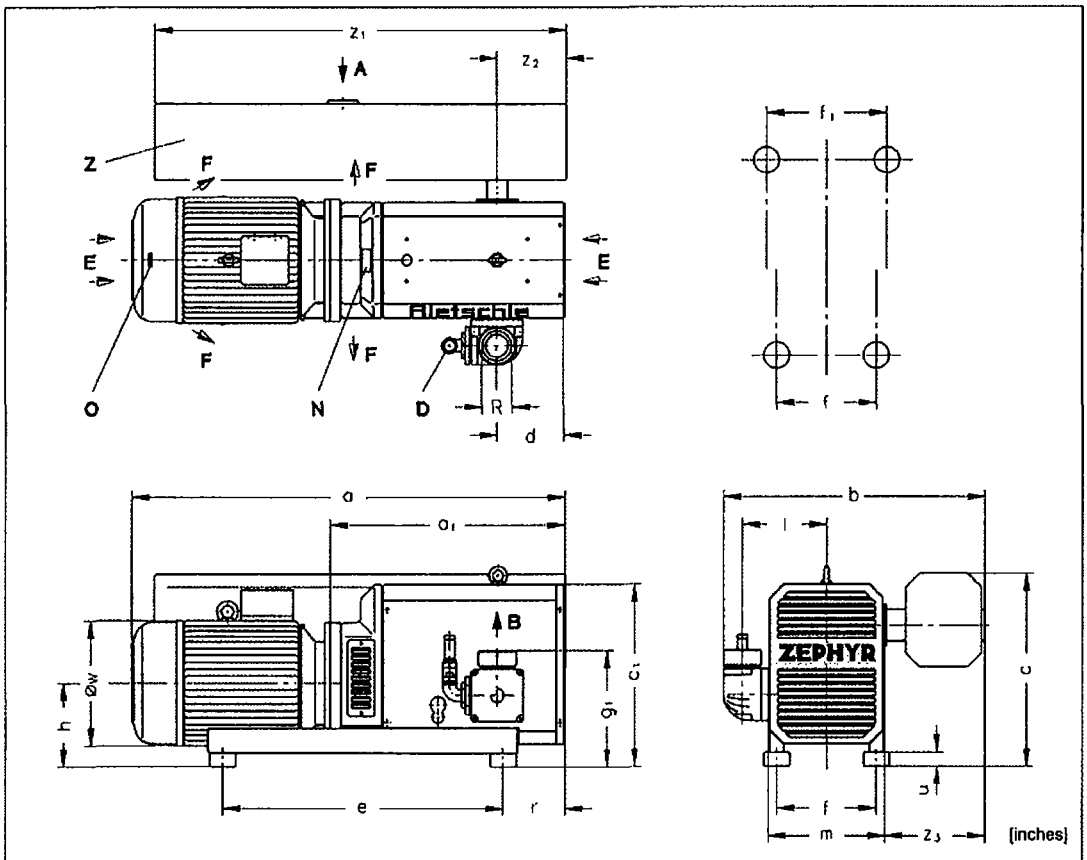

A	Suction	Succión	Aspiration	Sucção
B	Pressure connection	Conexión presión	Raccord surpression	Conexão da pressão
D	Pressure regulating valve	Válvula reguladora de presión	Valve de réglage pression	Válvula de regulagem da pressão
E	Cooling air entry	Entrada aire refrigerante	Entrée air refroidissement	Entrada do ar refrigerante
F	Cooling air exit	Salida aire refrigerante	Sortie air refroidissement	Saída do ar refrigerante
N	Data plate	Placa fecha	Etiquette caractéristique	Placa da data
O	Rotation arrow	Dirección de rotación	Flèche sens rotation	Direção da rotação
Z	Inlet silencer	Silenciador entrada	Silencieux d'aspiration	Silenciador de entrada

DLR		100			250			300			400				500			
kW	50 Hz	3.0	4.0	5.5	7.5	11	-	7.5	11	15	11	15	18.5	22	15	18.5	22	30
hp	60 Hz	5.0	7.5	10	10	15	20	15	20	25	20	25	30	-	-	30	-	40
[inches] a	50 Hz	27.36	28.03	32.17	36.26	40.67	-	36.26	40.67	40.67	47.36	47.36	47.36	49.76	47.36	47.36	49.76	54.09
	60 Hz	31.49	33.07	33.07	37.79	38.85	38.85	38.85	38.85	46.01	45.47	52.70	52.70	-	-	53.21	-	54.85
a_1	50 Hz	15.43	15.43	16.22	20.31	20.31	-	20.31	20.31	20.31	27.01	27.01	27.01	27.01	27.01	27.01	27.01	29.37
	60 Hz	17.56	17.56	17.56	22.28	22.28	22.28	22.28	22.28	22.62	28.90	29.31	29.31	-	-	29.82	-	29.82
b		21.26			28.43			28.43			29.29				30.08			
c / c_1		14.76 / 14.17			21.06 / 20.67			21.06 / 20.67			21.06 / 20.67				21.85 / 20.67			
d		3.62			3.94			3.39			7.76				7.76			
e		17.32			28.35			28.35			32.28				32.28			36.22
f		8.66			11.42			11.42			11.42				11.42			11.42
f_1		-			-			-			-				-			13.78
g_1		8.23			11.54			11.54			13.07				13.07			
h		5.91			9.45			9.45			9.45				9.45			
l		7.17			9.25			9.25			9.65				9.65			
m		10.24			13.39			13.39			13.39				13.39			
r		3.03			4.37			4.37			7.05				7.05			
u		5.91			1.57			1.57			1.57				1.57			
øw	50 Hz	7.72	8.66	9.69	9.69	12.28		9.69	12.28		12.28				12.28		14.17	
	60 Hz	7.88	9.57	9.57	9.57	11.47		11.47	11.47	15.30	11.47	15.30		-	-	15.30	-	16.88
z_1 / z_2 / z_3		25.59 / 3.94 / 7.68			39.37 / 3.15 / 10.63			39.37 / 3.15 / 10.63			39.37 / 3.15 / 10.63				47.24 / 7.87 / 11.42			
R		1½" NPT			2" NPT			2" NPT			3" NPT				3" NPT			

DA 881

2.1.2002

Rietschle Inc.
7222 Parkway Drive
Hanover, MD 21076 USA
☎ 410-712-4100
Fax 410-712-4148
E-Mail:
info@rietschleusa.com
http://
www.rietschleusa.com

DLR		100			250			300			400				500			
cfm	50 Hz	58.9			138			177			227				294			
	60 Hz	70.6			166			212			272				353			
psig	50 Hz	11.6	20.3	31.9	14.5	29.0	-	8.7	20.3	31.9	11.6	20.3	26.1	29.0	11.6	17.4	23.2	29.0
	60 Hz	14.5	29.0	31.9	8.7	23.2	31.9	14.5	26.1	31.9	14.5	23.2	29.0	-	-	20.3	-	29.0
3~	50 Hz	230/400V ± 10%			400/690V ± 10%													
	60 Hz	208-230/460V ± 10%						230/460V ± 10%										
kw	50 Hz	3.0	4.0	5.5	7.5	11	-	7.5	11	15	11	15	18.5	22	15	18.5	22	30
hp	60 Hz	5.0	7.5	10	10	15	20	15	20	25	20	25	30	-	-	30	-	40
rpm	50 Hz	2850																
	60 Hz	3450																
dB(A)	50 Hz	79			81			82			82				82			
	60 Hz	83			85			85			85				85			
lbs	50 Hz	232	243	287	503	562	-	560	621	653	712	747	783	831	759	794	908	1213
	60 Hz	259	307	328	517	595	593	652	650	790	743	883	929	-	-	940	-	1044
l		0.5			0.9			0.9			0.9				0.9			

ZRK	40 (03)	50 (03)	50 (03)	80 (03)	80 (03)
ZAF	40 (00)	50 (00)	50 (00)	80 (00)	80 (00)
ZDR	#	#	#	#	#
ZPD	#	#	#	#	#
ZMS / ZAD	#	#	#	#	#

cfm	Capacity	Capacidad	Volume engendré	Capacidade
psig	Excess pressure	Exceso de presión	Surpression	Pressão excessiva
3~	Motor version	Versión motor	Exécution moteur	Versão do motor
kw / hp	Motor rating	Datos motor	Puissance moteur	Potência do motor
rpm	Speed	Velocidad	Vitesse rotation	Velocidade
dB(A)	Average noise level	Nivel de ruido medio	Niveau sonore moyen	Nível médio de ruído
lbs	Weight	Peso	Poids	Peso
l	Oil capacity (Gear)	Instrumentos capacidad aceite	Charge d'huile (Engrenage)	Engrenagem da capacidade do óleo
	Accessories	Accesorios	Accessoires	Acessórios
ZRK	Non return valve	Válvula retención	Clapet anti-retour	Válvula sem retorno
ZAF	Suction filter	Filtro succión	Filtre d'aspiration	Filtro de sucção
ZDR	Pressure regulating valve	Válvula reguladora de presión	Valve de réglage pression	Válvula de regulagem da pressão
ZPD	Pulsation silencer	Silenciador de pulsación	Absorbeur de pulsations	Silenciador de pulsação
ZMS	Motor starter	Arranque motor	Disjoncteur moteur	Arranque do motor
ZAD	Soft starter	Soft starter	Démarrage progressif	Soft starter

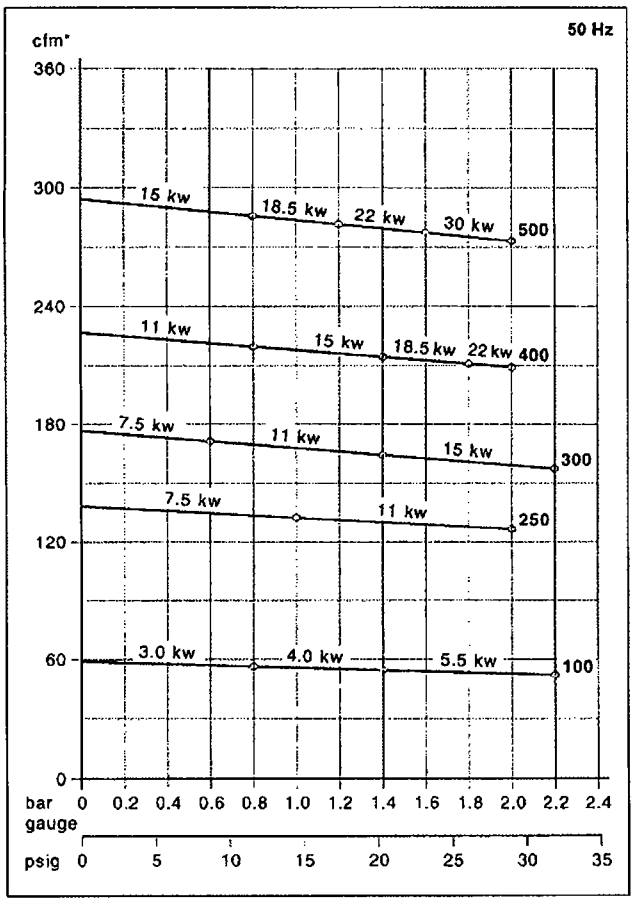

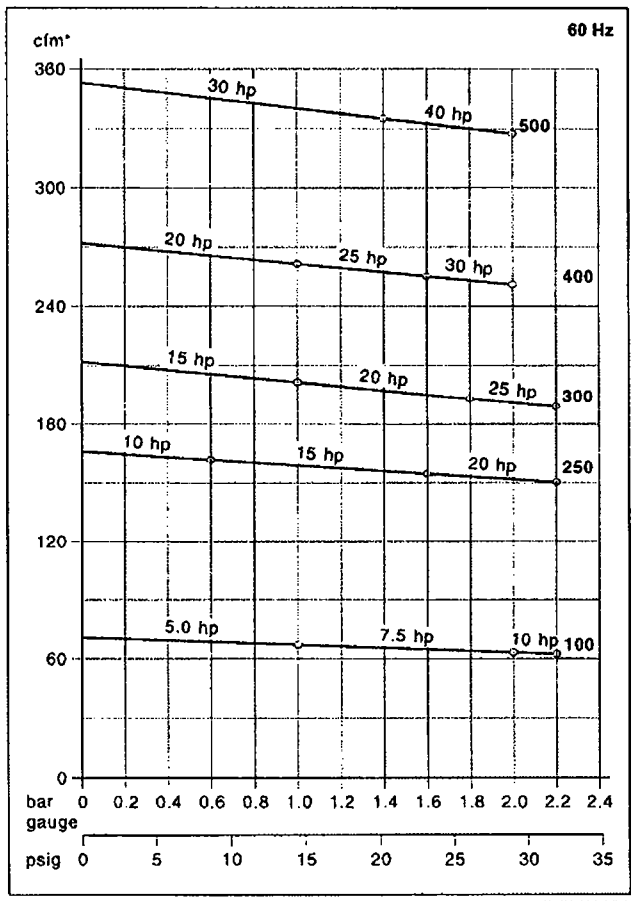

* Capacity refers to free air at 1 standard atmosphere and 20° C (68° F)./ La capacidad se refiere al aire libre a 1 atmosfera estandár de presión y a 20° C (68° F) de temperatura./ Le débit est mesuré à l'atmosphère de 1 bar (abs.) à 20° C (68° F)./ A capacidade refere-se ao ar livre a uma atmosfera padrão 1 e a 20° C (68° F).
Curves and tables refer to compressor at normal operating temperature./ Las curvas y las tablas se refieran al compresor a la temperatura normal de operación./ Les courbes et tableaux sont établies, compresseur à température de functionnement./ As curvas e tabelas referem-se ao compressor a temperatura normal de operação.
Technical information is subject to change without notice!/ La información técnica está sujeta a cambios sin previo aviso!/ Sous réserve de modification technique./ A informação técnica está sujeita a mudança sem aviso prévio!
The listed values for a, e w and full load amperage may vary because of different motor manufacturers./ Los valores listados para e, e w y para el amperaje de carga completa pueden variar para distintos fabicantes de motores./ Les dimensions a et e w ainsi que l'ampérage peuvent différer des données indiquées ci-dessus, selon le fabricant du moteur./ Como variam os fabricantes de motores, poderá haver variação dos valores indicados para a, e w e para uma amperagem da carga total.
on request # on pedido # sur demande # a pedido

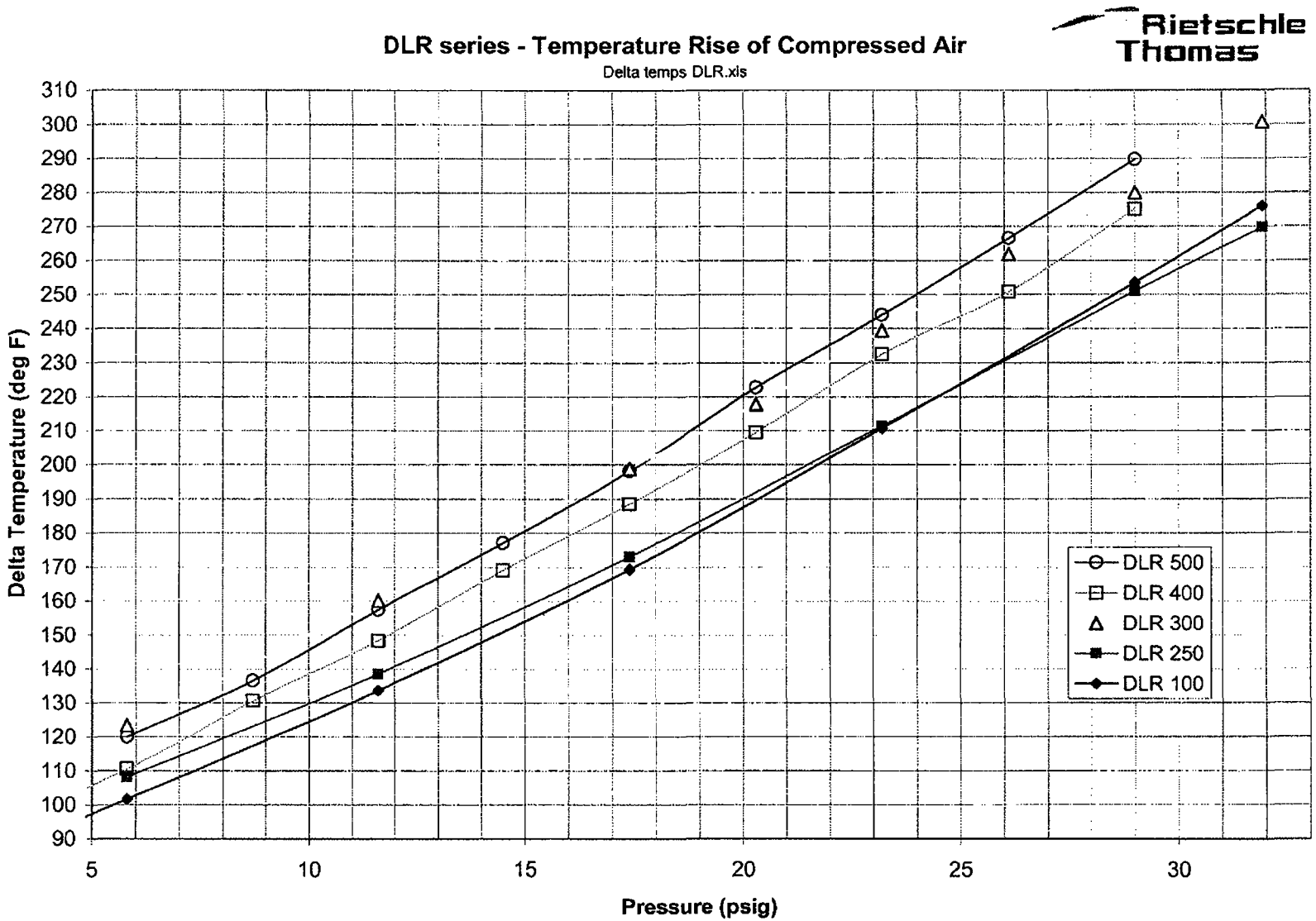

PDF created with pdfFactory trial version www.pdffactory.com

American Industrial Heat Transfer Inc.®

Manufacturers of Quality Heat Exchangers

ACA SERIES

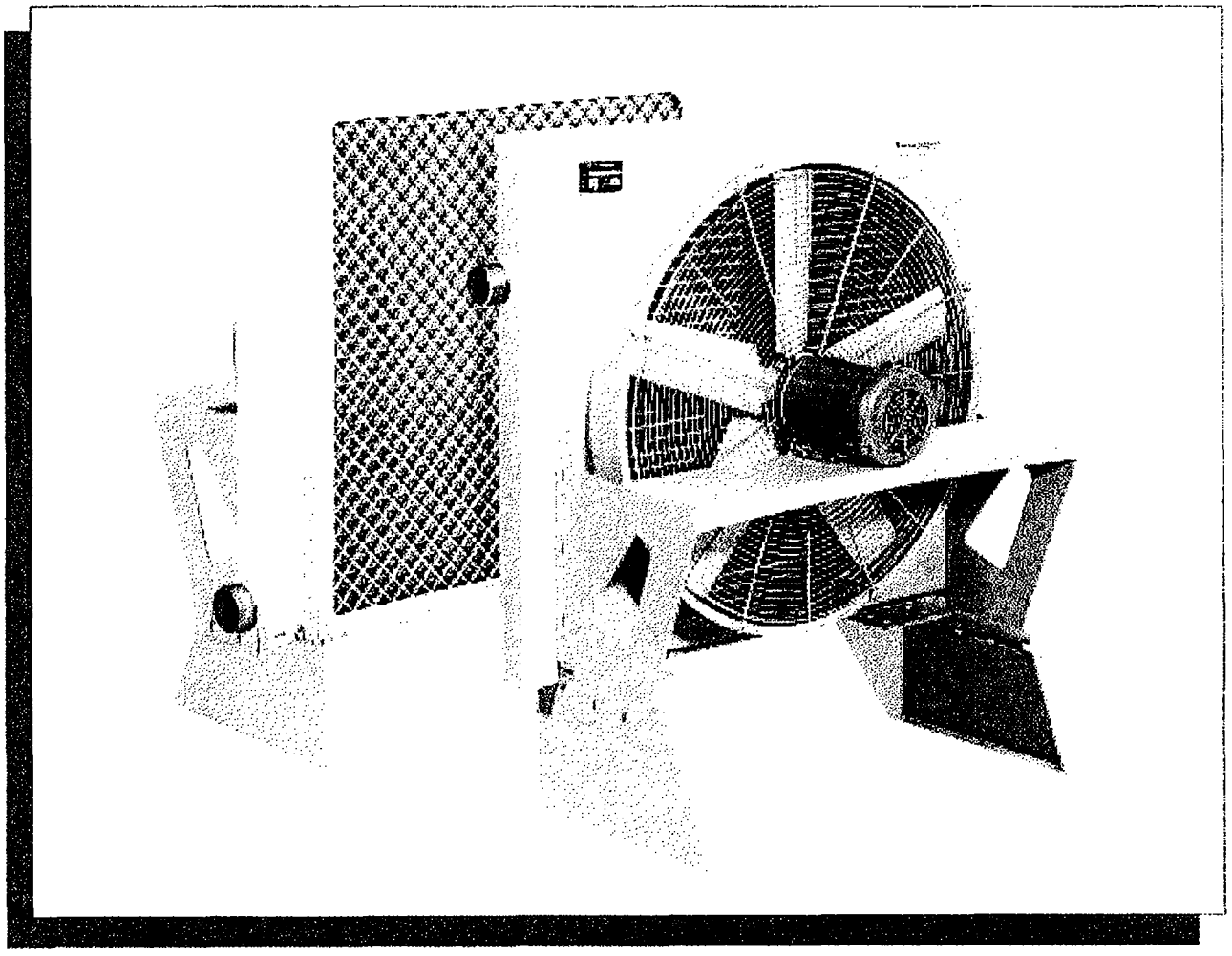

Compressed Gas or Vapor

Visit our Web Site at www.aihti.com

AFTERCOOLERS

AIR COOLED

- Standard ports NPT, optional ANSI flange.
- Operating temperature of 400° F & pressure of 150PSI.
- Custom designs to fit your needs.
- Cools: Air, Compressors, Blowers, Steam vapors, Pneumatic systems, Vapor recovery systems etc...
- This brochure contains important user information such as: installation, serviceability, and warranty information.

ACA-2001 supersedes ACA-2000 and all previous printings.

STANDARD FEATURES

ACA - 3181 through ACA - 4362

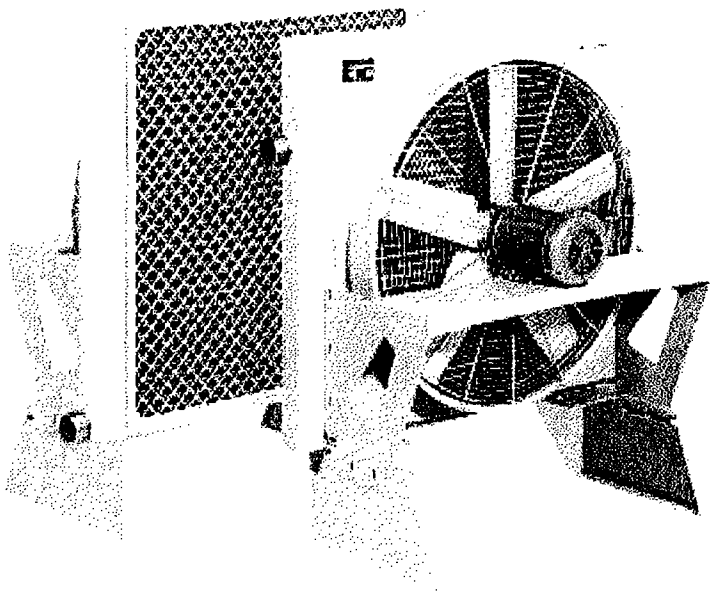

Brazed Core Construction

Air coolers are an essential part of any compressed air system, by cooling the air, and condensing water vapor into a liquid state for removal. When air is compressed, the compression induces heat into both the air and the water entrained in the air.
The American Industrial ACA series heat exchanger cools air with air, making it a simple inexpensive way to cool when compared to other water-cooled or refrigerant cooled systems. The unique compact *brazed* fin/tube design provides efficient cooling and low maintenance under the warmest environmental conditions. By using an ACA series air-cooled after cooler, machine tools will recieve cooler dryer air, provide longer trouble free life, experience less down time, and be cost effective to operate on a continuous basis.

SUPERIOR COOLING FINS

Copper tubes are mechanically bonded to highly efficient aluminum cooling fins. Die-formed fin collars provide a durable precision fit for maximum heat transfer.
Custom fin design forces air to become turbulent and carry heat away more efficiently than old flat fin designs.

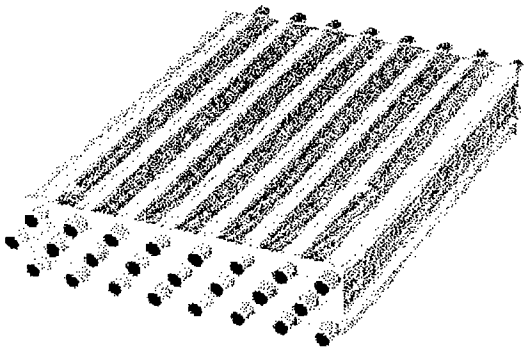

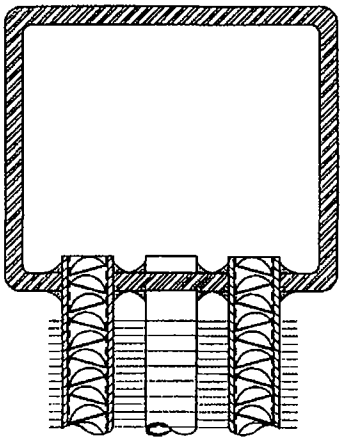

TANKS

State-of-the-art high temperature brazing method insures permanent bond and positive contact of tube to manifold, eliminating leaks and providing maximum service life.

Standard Construction Materials		Standard Unit Ratings	
Tubes	Copper	Operating Pressure	150 psig
Fins	Aluminum	Operating Temperature	400 °F
Cabinet & Pipes	Steel	Consult factory for optional materials and ratings.	
Fan Guard	Zinc plated steel		
Manifolds	Steel		

Copyright © 2001 American Industrial Heat Transfer, Inc.

STANDARD FEATURES

ACA - 6301 through ACA 6602

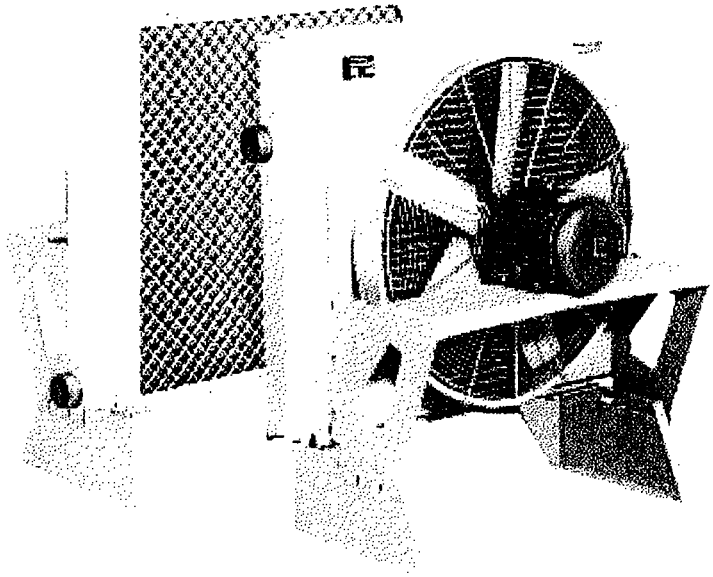

Serviceable Core® Construction

Air coolers are an essential part of any compressed air system, by cooling the air, and condensing water vapor into a liquid state for removal. When air is compressed, the compression induces heat into both the air and the water entrained in the air.
The American Industrial ACA series heat exchanger cools air with air, making it a simple inexpensive way to cool when compared to other water-cooled or refrigerant cooled systems. The unique compact *serviceable core®* design provides efficient cooling and low maintenance under the warmest environmental conditions. By using an ACA series air-cooled after cooler, machine tools will recieve cooler dryer air, provide longer trouble free life, experience less down time, and be cost effective to operate on a continuous basis.

SERVICEABLE CORE®

Core covers disassemble for easy access and cleaning. Repairable design for applications that require limited down time or in the event of a mishap requiring repair. Roller expanded tube to tube-sheet joint. 100% mechanical bond. Positive gasket seal is field replaceable for field maintenance or repair.

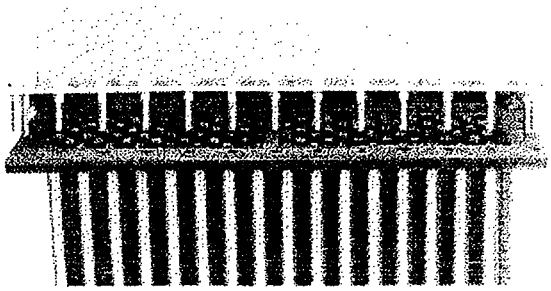

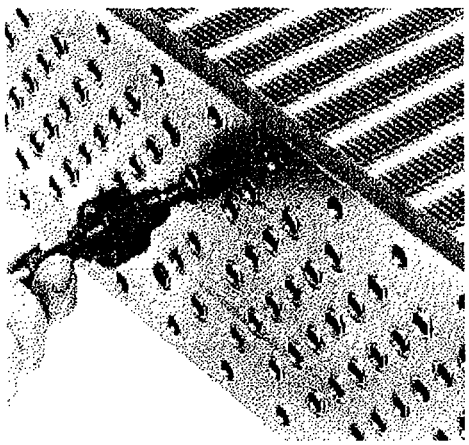

SUPERIOR COOLING FINS

Copper tubes are mechanically bonded to highly efficient aluminum cooling fins. Die-formed fin collars provide a durable precision fit for maximum heat transfer. Custom fin design forces air to become turbulent and carry heat away more efficiently than old flat fin designs.

Standard Construction Materials		Standard Unit Ratings	
Tubes	Copper	Operating Pressure	150 psig
Fins	Aluminum	Operating Temperature	400 °F
Cabinet & Pipes	Steel	Consult factory for optional materials and ratings.	
Fan Guard	Zinc plated steel		
Manifolds	Steel		

Copyright © 2001 American Industrial Heat Transfer, Inc.

SELECTION

Compressed Air

Normally air compressors have airflow rates based upon the horsepower. Rotary Screw compressors normally discharge air at 180 °f - 200 °f, prior to after-cooling. Reciprocating compressors normally discharge air at 250 °f - 275 °f, prior to after-cooling. Compressors are rated in CFM or cubic feet per minute of free air at inlet conditions. For practical purpose we will use sea level at 68f and 36% relative humidity as a norm. Altitude, differing ambient conditions with respect to temperature and humidity will all affect heat exchanger performance to a degree. Moisture content in air actually increases the Btu/hr load requirement for cooling air by adding an additional condensing load to the gas load requirement. As air rapidly coolís, moisture will condense and separate into droplets, the more humidity present the more condensation will occur.

Sizing

The performance curves provided are for air. However, gases other than air may be applied to this cooler with respect to compatibility by applying a correction factor. Please take time to check the operating specifications thoroughly for material compatibility, pressure, and size before applying an American Industrial heat exchanger into your system.

Terms

Approach Temperature is the desired outlet temperature of the compressed gas minus the inlet ambient air temperature of the external air flowing over the coil.
SCFM (Standard Cubic Feet per Minute)
A cubic foot of air at 68 °f, 14.696 psia, & 36% relative humidity, per minute.
CFM (Cubic Feet per Minute)
Air at inlet atmospheric conditions.
ACFM (Actual Cubic Feet per Minute)
Air at current pressure, temperature, & humidity conditions without reference to a standard.

To Determine the Heat Load

If the heat load (Btu/hr) is unknown a value can be calculated based upon system operational requirements. To properly calculate the heat load (Btu/hr) to be rejected, several items must be known with certainty (see below).

- Flow rate SCFM (standard cubic feet pr minute)
- Type of gas and its makeup.
- System inlet pressure to the heat exchanger.
- Ambient temperature where the heat exchanger will be located (hotest condition).
- Temperature of the gas at the heat exchanger inlet.
- Temperature of the gas desired at heat exchanger outlet.
- Maximum acceptable pressure loss or cooled gas.

Using The Chart

American Industrial has created a quick reference chart for selecting ACA heat exchangers for Rotary Screw compressors. (see pg. 6) [This chart offers basic information based upon compressor horsepower and average airflow rates. To properly use the chart, select the compressor horsepower at the left or the air flow rate. Next select the approach to ambient that is desired. Where the two columns intersect is shown the proper ACA model number.]

Using The Graphs

American Industrial provides performance graphs for ease of model selection. The following calculation examples (pg. 5), illustrate formulas to determine model selection sizes. It should be noted that there are some assumptions made when applying the basic principles for calculation in the formula. Altitude, humidity, materials, pressures, etc... all contribute to the final selection. Contact American Industrial for more detailed calculation.

Selection

The selection process is important, many considerations should be made when selecting a heat exchanger. Once the proper Fs requirement is calculated, it is now time to apply the data to the graph and make a selection.
1) Find the Flow rate in SCFM located at the bottom of the graph. Follow the graph line up until it matches the calculated Fs from your calculations. If the point falls just above one of the model graphed lines, select the next larger size. If the point is on a line select it as your choice.
2) Check carefully the pressure differential. Units with operating pressures from 70+ psig will have no greater than 2.0 psid within the published flow range. For lower inlet pressure see the pressure drop curves for more detail.
3) Calculate a Nozzle size using the nozzle size calculation to verify your selection has the proper port sizes for your required inlet pressure.

Formula:

$$\text{Nozzle Size} = \sqrt{\frac{\left[\frac{(\text{SCFM} \times 4.512)}{(270{,}000 \times d)} \times 144\right]}{.7854}}$$

Example:
Flow rate = 200 SCFM
Pressure = 15 psig
Density = (d) from Compressed Air Density Graph

$$\sqrt{\frac{\left[\frac{(200 \times 4.512)}{(270{,}000 \times .14)} \times 144\right]}{.7854}} = 2.09\text{" or (2" Nozzle)}$$

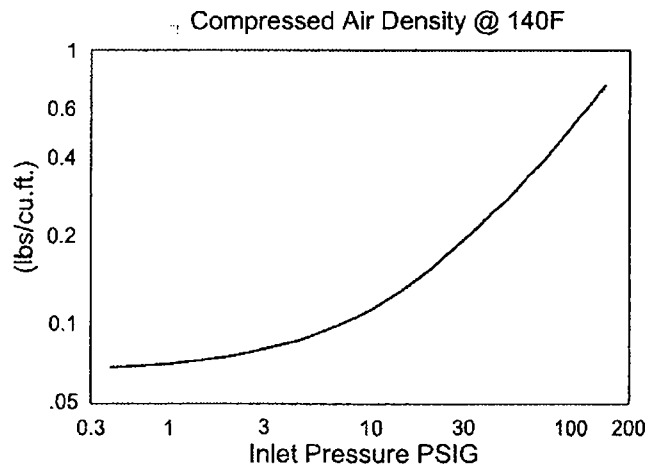

Copyright © 2001 American Industrial Heat Transfer, Inc.

Examples:

Application 1 Air Rotary Screw Compressor

Determine the heat load "Q" =Btu/hr — $Q = [SCFM \times CF \times (T_1 - T_2)]$ or $[350 \times 1.13 \times 105°] = 41{,}528$ Btu/hr

T_1 = Inlet gas temperature: 200°f

T_2 = Outlet gas temperature: Ambient + 10°f= (95°f) — Determine the Fs = $\frac{Btu/hr}{T_2 - T_a}$ or $\frac{41{,}528}{10}$ = **4,153 Fs**

T_a = Ambient temperature: 85°f

Airflow rate: 350 SCFM

PSIG = Operating Pressure 100 psig

CF = Correction factor: 1.13 — $CF = (.0753 \times S \times C \times 60)$ or $(.0753 \times 1.0 \times .25 \times 60) = 1.13$

S = Specific gravity with air being 1.0

C = Specific heat (Btu/Lb °f): .25

Application 2 Methane Gas

Determine the heat load "Q" = Btu/hr — $Q = [SCFM \times CF \times (T_1 - T_2)]$ or $[500 \times 1.428 \times 210°] = 149{,}940$ Btu/hr

T_1 = Inlet gas temperature: 300°f

T_2 = Outlet gas temperature: 90°f — Determine the Fs = $\frac{Btu/hr}{T_2 - T_a}$ or $\frac{149{,}940}{30}$ = **4,998 Fs**

T_a = Ambient temperature: 60°f

Airflow rate: 500 SCFM

PSIG = Operating pressure: 190 psig

CF = Correction factor: 1.428 — $CF = (.0753 \times S \times C \times 60)$ or $(.0753 \times .55 \times .575 \times 60) = 1.428$

S = Specific gravity with air being 1.0: .55

C = Specific heat (Btu/Lb °f)

Application 3 Air Sparge Air Compressor

Determine the heat load "Q" = Btu/hr — $Q = [SCFM \times CF \times (T_1 - T_2)]$ or $[76 \times 1.13 \times 150°] = 12{,}882$ Btu/hr

T_1 = Inlet gas temperature: 250°f

T_2 = Outlet gas temperature: 100°f — Determine the Fs = $\frac{Btu/hr}{T_2 - T_a}$ or $\frac{12{,}882}{10}$ = **1,288 Fs**

T_a = Ambient temperature: 90°f

CF = Correction Factor: 1.13

PSIG = Operating pressure: 2 psig

Airflow rate: 90 ACFM — Convert to SCFM = $\frac{ACFM \times (PSIG + 14.7) \times 528}{(T_1 + 460) \times 14.7} = \frac{90 \times 16.7 \times 528}{710 \times 14.7} = 76$ SCFM

S = Specific gravity with air being 1.0

C = Specific heat (Btu/lb °f): .25

ΔP = 5" water column or less

Pressure Drop

Since gas is compressible the density of the gas changes from one temperature or pressure to the next. While the mass flow rate may not change, the pressure differential across the heat exchanger will change dramatically from high (70-125 psig) to low (1-5 psig) pressure. A low pressure condition requires larger carrying lines to move flow than does the same gas rate under a higher pressure. At lower pressures the differential pressure across the heat exchanger can be quite high compared to the same flow rate at a higher pressure. For that reason it is suggested that you check the pressure differential graphs (pg. 12) when making your selection.

The ACA series heat exchanger is designed to be easily modified to accept larger port sizes in the event your system pressure is low. (See nozzel calculation pg. 4) Consult our engineering department for more exacting information regarding pressure differential issues.

Copyright © 2001 American Industrial Heat Transfer, Inc.

SELECTION

ROTARY SCREW COMPRESSORS
(200°F @125 PSI & 36% relative humidity)

Compressor Horse Power (HP)	Average Air Discharge Cubic feet per minute (SCFM)	Model Size Selection			
		*Approach Temperature °F (T_2 - T_a)			
		5°F	10°F	15°F	20°F
15	60	ACA - 3302	ACA - 3242	ACA - 3242	ACA - 3182
20	80	ACA - 3302	ACA - 3242	ACA - 3242	ACA - 3182
30	130	ACA - 3362	ACA - 3302	ACA - 3242	ACA - 3242
40	165	ACA - 3362	ACA - 3302	ACA - 3302	ACA - 3242
60	250	ACA - 4362	ACA - 3362	ACA - 3302	ACA - 3302
75	350	ACA - 6362	ACA - 4362	ACA - 3362	ACA - 3302
100	470	ACA - 6362	ACA - 6362	ACA - 3362	ACA - 3362
125	590	ACA - 6422	ACA - 6362	ACA - 4362	ACA - 3362
150	710	ACA - 6422	ACA - 6362	ACA - 6362	ACA - 4362
200	945	ACA - 6482	ACA - 6422	ACA - 6362	ACA - 6362
250	1160	ACA - 6482	ACA - 6422	ACA - 6362	ACA - 6362
300	1450	ACA - 6542	ACA - 6482	ACA - 6422	ACA - 6362
350	1630	ACA - 6542	ACA - 6482	ACA - 6422	ACA - 6362
400	1830	ACA - 6602	ACA - 6482	ACA - 6422	ACA - 6422
500	2150	ACA - 6602	ACA - 6542	ACA - 6482	ACA - 6422

***Approach Temperature** - is the desired outlet temperature of the compressed gas minus the inlet ambient air temperature of the external air flowing over the coil.

T_2 - Outlet gas temperature

T_a - Ambient temperature

Example of a model:

ACA - 3242 - 3 - N - ____ - ____

Model
ACA

Size

Number of Passes
1P = 1 pass
2P = 2 pass

Drive Type
1 = 1ph/60hz/115-230v
1EXP = 1ph/60hz/115-230v
3 = 3ph/60hz/230-460v
3EXP = 3ph/60hz/230-460v
5 = 3ph/60hz/575v
0 = no motor

Connections
N = NPT
A = ANSI 150#RF Flange

Core Coating
T = Heresite
X = Epoxy
Blank = Enamel (Standard)

Cabinet Coating
G = Galvanize
X = Epoxy
Blank = Enamel (Standard)

Using the performance graphs

The Flow vs. Fs graph is calculated based upon SCFM units.

To convert volumetric Actual Cubic Feet per Minute (ACFM) into Standard Cubic Feet per Minute (SCFM) see page 5.

To select a model, locate the flow rate in SCFM located at the bottom of the graph. Proceed upward on the graph until the SCFM flow rate intersects with the calculated Fs. The curve closest, on or above the intersection point is the proper selection.

Using the one pass graph or two-pass graph depends upon pressure differential, flow, and performance requirements. The actual surface area for one or two pass units is the same. However, the airflow velocity in the tubes increases with the number of passes giving slightly higher pressure differentials and better cooling performance.

Copyright © 2001 American Industrial Heat Transfer, Inc.

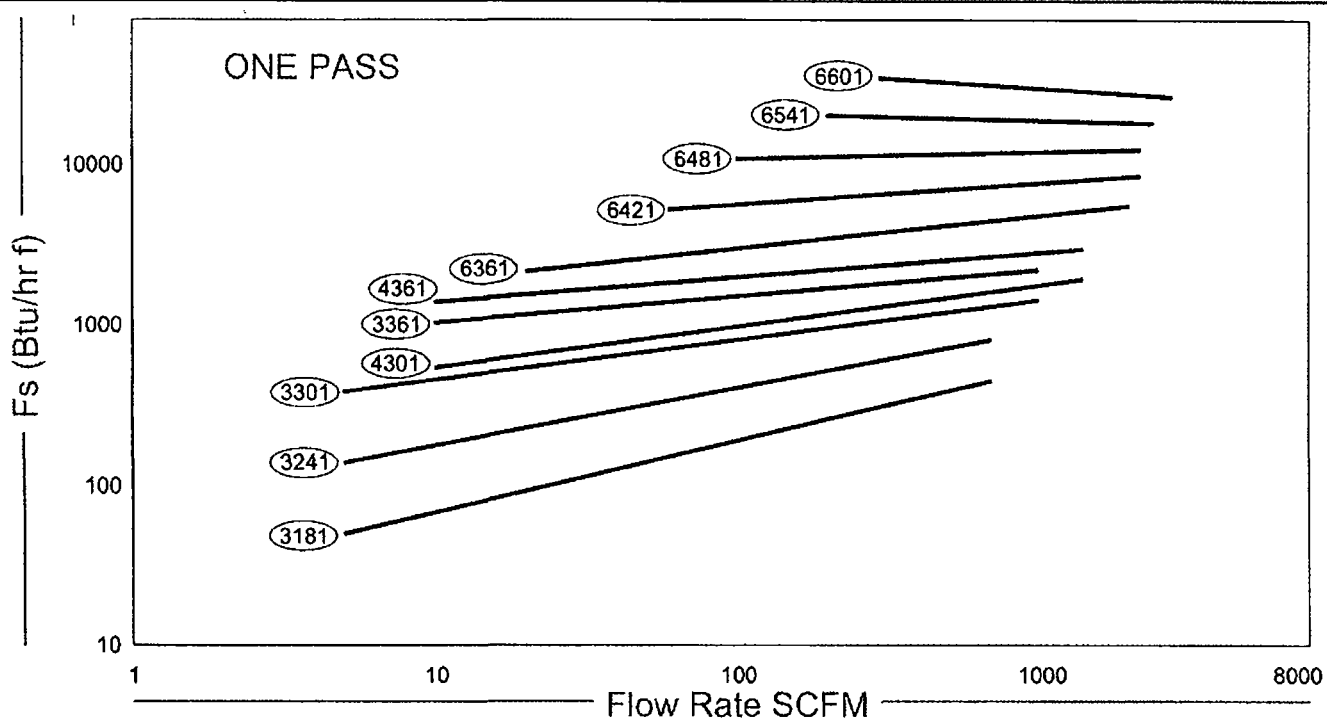

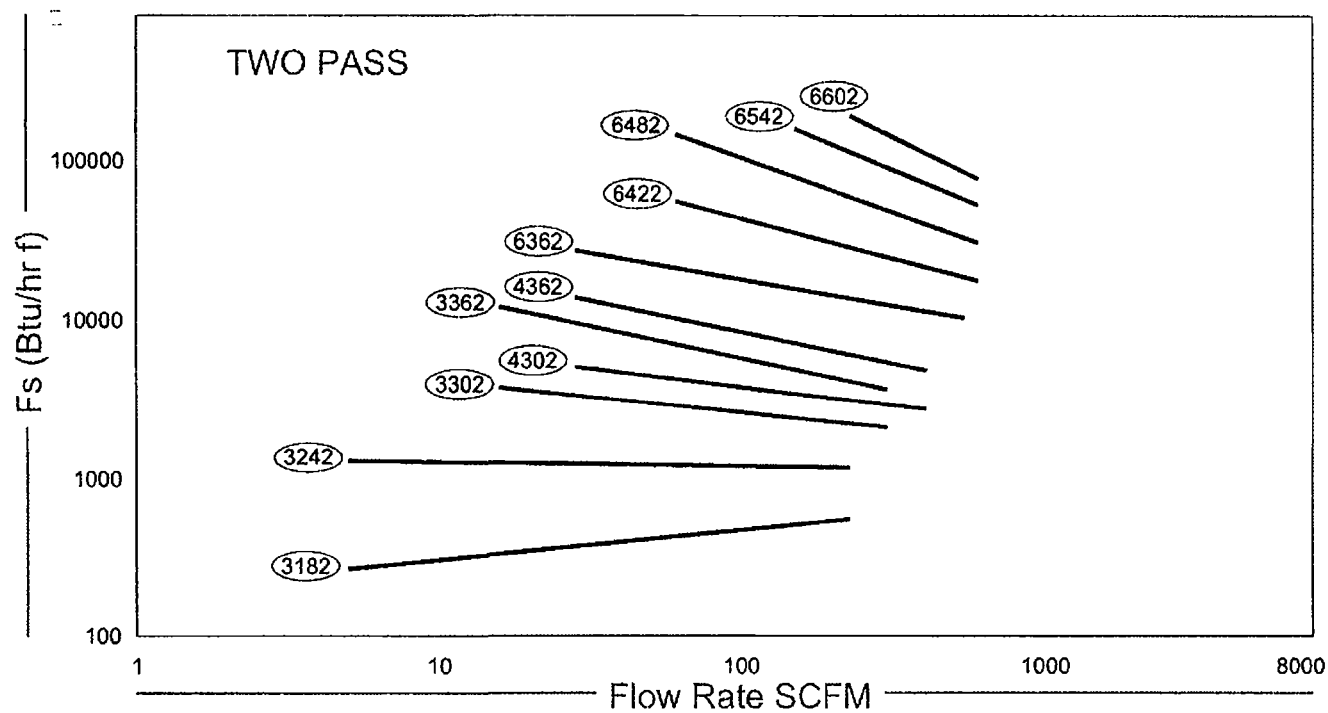

Example

Application #3 (p.5)

$$\mathbf{Fs} = \frac{\text{Heat Load (Btu/hr)}}{\text{Process exiting temperature } (T_2) \text{ from cooler} - \text{Ambient air exiting the cooler } (T_a) \text{ the cooler}}$$

SCFM = 76
ΔPSI required = 5" H2O
Model selection = ACA-6421-3
Fs = 1,288 Nozzle check (p.4) = 3.10 or 3"NPT

Copyright © 2001 American Industrial Heat Transfer, Inc.

ELECTRIC MOTOR

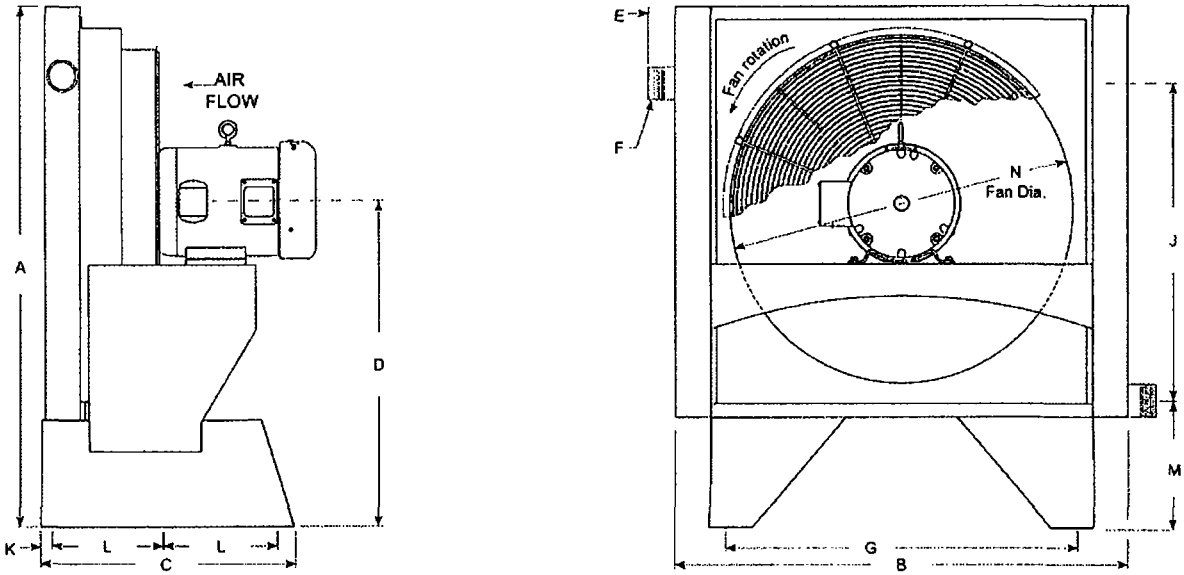

ACA - 3181 through ACA - 4361

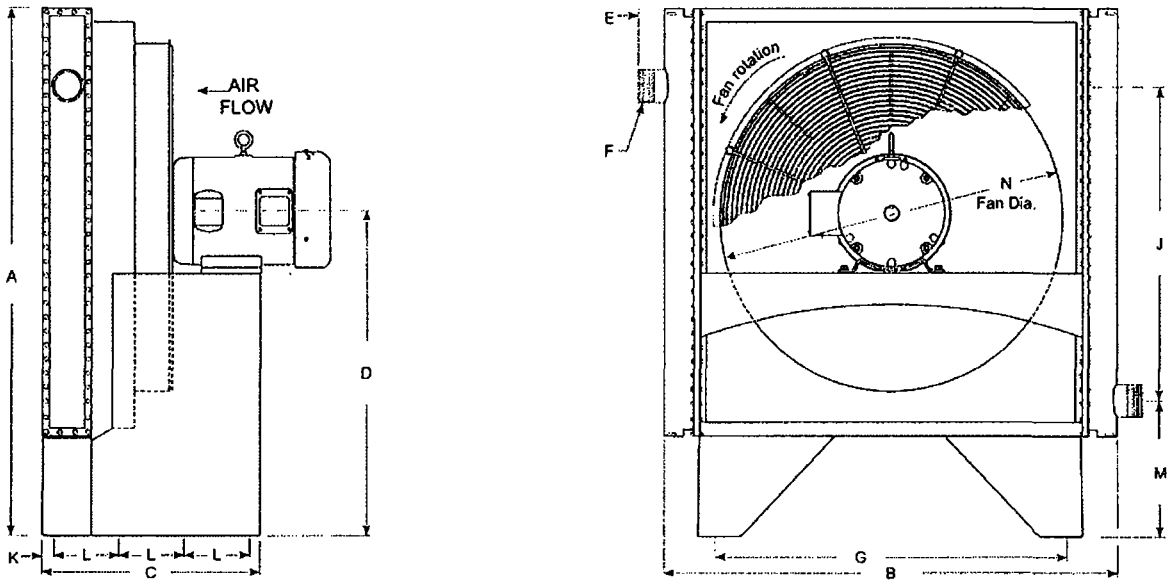

ACA - 6361 through ACA - 6601

DIMENSIONS (inches)												
Model	A	B	C	D	E	F NPT	G	J	K	L	M	N
ACA - 3181	30.6	23.0	19.8	20.25	2.5	1.5	16.3	14.3	1.5	8.38	11.0	14.0
ACA - 3241	36.5	29.0	19.8	23.25	2.5	1.5	22.3	18.9	1.5	8.38	11.0	22.0
ACA - 3301	42.3	35.0	19.8	26.25	2.5	2.0	28.3	23.0	1.5	8.38	11.2	28.0
ACA - 4301	42.3	36.0	19.8	26.25	2.5	2.5	28.3	23.0	1.5	8.38	11.4	28.0
ACA - 3361	48.5	41.0	19.8	29.25	2.5	2.0	34.3	27.4	1.5	8.38	11.2	32.0
ACA - 4361	48.5	42.0	19.8	29.25	2.5	2.5	34.4	27.4	1.5	8.38	11.4	32.0
ACA - 6361	48.5	43.9	19.8	29.25	2.5	3.0	34.3	26.0	1.5	8.38	12.7	32.0
ACA - 6421	54.5	50.8	27.36	32.25	2.5	4.0	40.3	29.4	2.0	6.75	13.3	36.0
ACA - 6481	60.6	56.8	27.36	35.25	2.5	4.0	46.3	34.1	2.0	6.75	13.3	42.0
ACA - 6541	66.6	62.8	28.83	38.25	2.5	4.0	52.3	38.6	2.0	6.75	13.3	48.0
ACA - 6601	72.4	67.9	30.6	41.25	2.5	4.0	58.3	43.05	2.0	6.75	13.3	48.0

NOTES: We reserve the right to make reasonable design changes without notice.
Represents the options for motor drive.

Copyright © 2001 American Industrial Heat Transfer, Inc.

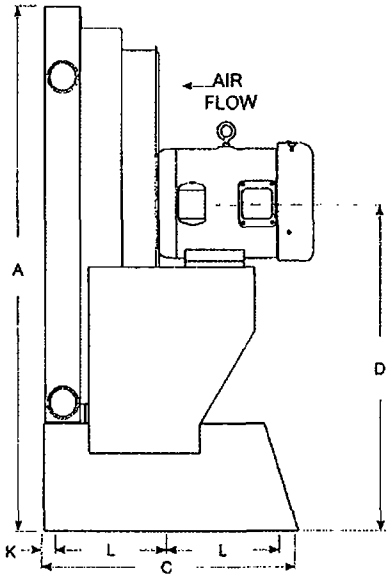

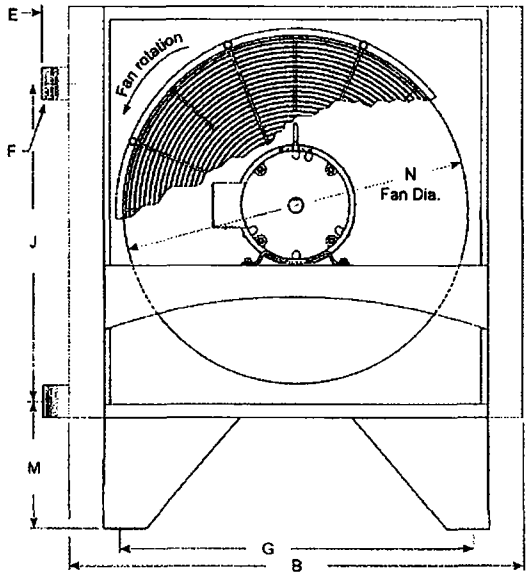

ACA - 3182 through ACA - 4362

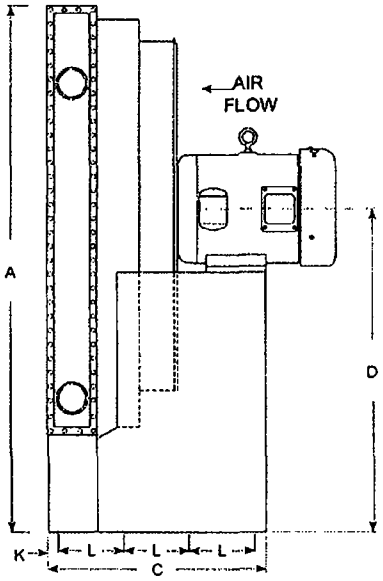

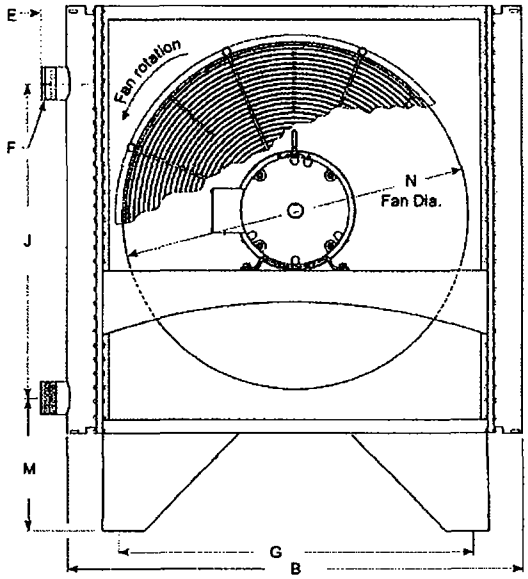

ACA - 6362 through ACA - 6602

DIMENSIONS (inches)												
Model	A	B	C	D	E	F NPT	G	J	K	L	M	N
ACA - 3182	30.6	23.0	19.8	20.25	2.5	1.5	16.3	14.3	1.5	8.38	11.0	14.0
ACA - 3242	36.5	29.0	19.8	23.25	2.5	1.5	22.3	18.9	1.5	8.38	11.0	22.0
ACA - 3302	42.3	35.0	19.8	26.25	2.5	2.0	28.3	23.0	1.5	8.38	11.2	28.0
ACA - 4302	42.3	36.0	19.8	26.25	2.5	2.5	28.3	23.0	1.5	8.38	11.4	28.0
ACA - 3362	48.5	41.0	19.8	29.25	2.5	2.0	34.3	27.4	1.5	8.38	11.2	32.0
ACA - 4362	48.5	42.0	19.8	29.25	2.5	2.5	34.4	27.4	1.5	8.38	11.4	32.0
ACA - 6362	48.5	43.9	19.8	29.25	2.5	3.0	34.3	26.0	1.5	8.38	12.7	32.0
ACA - 6422	54.5	50.8	27.36	32.25	2.5	4.0	40.3	29.4	2.0	6.75	13.3	36.0
ACA - 6482	60.6	56.8	27.36	35.25	2.5	4.0	46.3	34.1	2.0	6.75	13.3	42.0
ACA - 6542	66.6	62.8	28.83	38.25	2.5	4.0	52.3	38.6	2.0	6.75	13.3	48.0
ACA - 6602	72.4	67.9	30.6	41.25	2.5	4.0	58.3	43.05	2.0	6.75	13.3	48.0

Copyright © 2001 American Industrial Heat Transfer, Inc.

STANDARD FEATURES

ELECTRIC MOTOR DATA

Model	Horse Power	Phase	Hz	Volts	RPM	NEMA Frame	Enclosure Type	Full Load Amperes	Service Factor	Thermal Overload
ACA- 3181/2- 1	.25	1	60-50	115/230 - 90/190	1725-1440	48	TEFC	3.2/1.6/2.8-1.4	1.15	NO
ACA- 3181/2 -3	.25	3	60-50	208 - 230/460 - 190/380	1725-1440	48	TEFC	1.3/.65/1.1-.55	1.15	NO
ACA- 3241/2 -1	.25	1	60-50	115/230 - 90/190	1140-950	56	TEFC	6.8/3.1-3.4	1.15	NO
ACA- 3241/2 -3	.25	3	60-50	208 - 230/460 - 190/380	1140-950	56	TEFC	1.7/2.0/1.0	1.15	NO
ACA- 3301/2 -1	.5	1	60-50	115/230 - 90/190	1140-950	56	TEFC	9.6/4.7-4.8/10.4/5.2	1.15	NO
ACA- 3301/2 -3	.5	3	60-50	208 - 230/460 - 190/380	1140-950	56	TEFC	2.4-2.7/1.35-2.5/1.25	1.15	NO
ACA- 4301/2 -1	.5	1	60-50	115/230 - 90/190	1140-950	56	TEFC	9.6/4.7-4.8/10.4/5.2	1.15	NO
ACA- 4301/2 -3	.5	3	60-50	208 - 230/460 - 190/380	1140-950	56	TEFC	2.4-2.7/1.35-2.5/1.25	1.15	NO
ACA- 3361/2 -3	1.0	3	60-50	208 - 230/460 - 190/380	1140-950	56	TEFC	4/2-3.7/1.85	1.15	NO
ACA- 4361/2- 3	1.0	3	60-50	208 - 230/460 - 190/380	1140-950	56	TEFC	4/2-3.7/1.85	1.15	NO
ACA- 6361/2 -3	3.0	3	60-50	208 - 230/460 - 190/380	1725-1440	182T	TEFC	8.4-6.8/3.4	1.15	NO
ACA- 6421/2 -3	5.0	3	60-50	208 - 230/460 - 190/380	1140-950	213T	TEFC	8.2-7.6/3.8	1.15	NO
ACA- 6481/2 -3	5.0	3	60-50	208 - 230/460 - 190/380	1140-950	213T	TEFC	14.0/7.0	1.15	NO
ACA- 6541/2 -3	7.5	3	60-50	208 - 230/460 - 190/380	1140-950	254T	TEFC	20.4/10.2	1.15	NO
ACA- 6601/2 -3	10	3	60-50	208 - 230/460 - 190/380	1140-950	256T	TEFC	28.0/14.0	1.15	NO

ELECTRIC MOTOR NOTES:

1) Motor electrical ratings are an approximate guide and may vary between motor manufacturers. Consult ratings on motor data plate prior to installation and operation.
2) Explosion proof, high temperature, severe duty, chemical, IEC, Canadian Standards Association, and Underwriters Laboratory recognized motors are available upon request.
3) American Industrial reserves the right to enact changes to motor brand, type and ratings regarding horsepower, RPM,FLA,and service factor for standard products without notice. All specific requirements will be honored without change.
4) Fan rotation is clockwise when facing the motor shaft.
5) The above motors contain factory lubricated shielded ball bearings (no additional lubrication is required).
6) Abbreviation Index
   TEFC.....Totally Enclosed. Fan Cooled
   EXP.....Explosion Proof
   CF.....Consult Factory

CLASS I,DIV.1, GROUP D or CLASS II,DIV.2, GROUP F & G EXPLOSION PROOF MOTOR DATA

Model	Horse Power	Phase	Hz	Volts	RPM	NEMA Frame	Enclosure Type	Full Load Amperes	Service Factor	Thermal Overload
ACA- 3181/2 -1	.25	1	60	115/230	1725	48	EXP	5.8/2.8	1.0	YES
ACA- 3241/2 -3	.25	3	60	208-230/460	1725	48	EXP	1.4-1.3/.65	1.0	YES
ACA- 3241/2 -1	.33	1	60	115/230	1140	56	EXP	7.8/3.5	1.0	YES
ACA- 3301/2 -3	.33	3	60	208-230/460	1140	56	EXP	1.18-1.6/8	1.0	YES
ACA- 3301/2 -1	.50	1	60	115/230	1140	56	EXP	9.4/4.8	1.0	YES
ACA- 4301/2 -3	.50	3	60	208-230/460	1140	56	EXP	2.5-2.4/1.2	1.0	YES
ACA- 4301/2 -1	.50	1	60	115/230	1140	56	EXP	9.4/4.8	1.0	YES
ACA- 3361/2 -3	.50	3	60	208-230/460	1140	56	EXP	2.5-2.4/1.2	1.0	YES
ACA- 4361/2 -3	1.0	3	60	230/460	1140	56	EXP	3.8/1.9	1.0	YES
ACA- 6361/2 -3	1.0	3	60	230/460	1140	56	EXP	3.8/1.9	1.15	YES
ACA- 6421/2 -3	3	3	60	230/460	1725	182	EXP	8.8/4.4	1.15	YES
ACA- 6481/2 -3	5	3	60	230/460	1160	215	EXP	15.0-13.8/6.9	1.15	YES
ACA- 6541/2 -3	5	3	60	230/460	1160	215	EXP	15.0-13.8/6.9	1.15	YES
ACA- 6601/2 -3	7.5	3	60	230/460	1160	256	EXP	21.6-20.4/10.2	1.15	YES
ACA- 3181/2 -3	1.0	3	60	230/460	1160	256	EXP	29-26/13	1.15	YES

NOTE: Basic electric drive units are supplied with one of the corresponding above listed motors.

Copyright © 2001 American Industrial Heat Transfer, Inc.

575 VOLT ELECTRIC MOTOR DATA

Model	Horse Power	Phase	Hz	Volts	RPM	NEMA Frame	Enclosure Type	Full Load Amperes	Service Factor	Thermal Overload
ACA- 3181/2 -5	1/3	3	60	575	1725	56	TEFC	.52 .56	1.15	NO
ACA- 3241/2 -5	1/3	3	60	575	1140	56	TEFC	.52 .56	1.15	NO
ACA- 3301/2 -5	1/2	3	60	575	1140	56	TEFC	1.08	1.15	NO
ACA- 4301/2 -5	1/2	3	60	575	1140	56	TEFC	1.08	1.15	NO
ACA- 3361/2 -5	1	3	60	575	1140	56	TEFC	1.6	1.15	*
ACA- 4361/2 -5	1	3	60	575	1140	56	TEFC	1.6	1.15	*
ACA- 6361/2 -5	3	3	60	575	1725	182T	TEFC	3.3	1.15	*
ACA- 6421/2 -5	5	3	60	575	1140	213T	TEFC	5.9	1.15	*
ACA- 6481/2 -5	5	3	60	575	1140	213T	TEFC	5.9	1.15	*
ACA- 6541/2 -5	7.5	3	60	575	1140	254T	TEFC	8.0	1.15	*
ACA- 6601/2 -5	10	3	60	575	1140	256T	TEFC	10.5	1.15	*

COMMON DATA

Model	Air Flow		Sound Level	Weight		Serviceable
	CFM	m^3/s	dB(A) @ 7ft	w/ motor	w/o motor	Core
ACA-3181/2	1550	0.731	72	131	111	NO
ACA-3241/2	2900	1.36	76	154	134	NO
ACA-3301/2	4450	2.10	76	184	160	NO
ACA-4301/2	4450	2.10	76	211	187	NO
ACA-3361/2	6350	2.99	79	243	205	NO
ACA-4361/2	6350	2.99	79	289	251	NO
ACA-6361/2	10500	4.95	91	402	342	YES
ACA-6421/2	14300	6.75	87	636	443	YES
ACA-6481/2	18700	8.82	88	753	560	YES
ACA-6541/2	23350	11.02	91	938	691	YES
ACA-6601/2	29300	13.83	91	1104	835	YES

NOTES:
a) * Represents the options for motor drive.
b) To estimate the sound level at distances other than 7 feet (4 meters) from the cooler, add 6 db for each halving of distance, or substract 6 db for each doubling of the distance.

Pressure Drop Graphs (see page 12)

Each graph represents a specific pressure drop at differing flow rates and inlet pressures. The four graphs for each model series size represents the more popular milestone pressure differentials commonly applied.

To use the graphs for selection purposes follw the steps below.

1) Locate the operating pressure at the bottom of the desired pressure drop chart.
2) Locate the flow rate in SCFM at the left end of the chart.
3) Follow the "Pressure" line vertically and the "Flow" line horizontally until they cross, note the location.
4) The curve on, or closest above will be exact or less pressure drop than requested and suitable for the application.
5) There may be several units shown above the intersection point, all of which will produce less than the desired pressure drop at the required flow.

Example: Application 3 Sparge air compressor

Flow = 76 SCFM
Operating pressure = 2 PSIG
Initial selection from graph page 7 = ACA-3302 or ACA-4361
Desired pressure drop = 5" H2O or less. (USE the "Pressure Drop 5" H20" curves page 12)
From the pressure drop graph, page 12. Acceptable choices - ACA-3302 is on the line, ACA-4361 is well below the line. Either unit could fulfill the requirement, however, other considerations should be made prior to selection such as unit physical size, cost, availability, and port size.

Copyright © 2001 American Industrial Heat Transfer, Inc.

PRESSURE DROP GRAPHS (selection instructions see page 11)

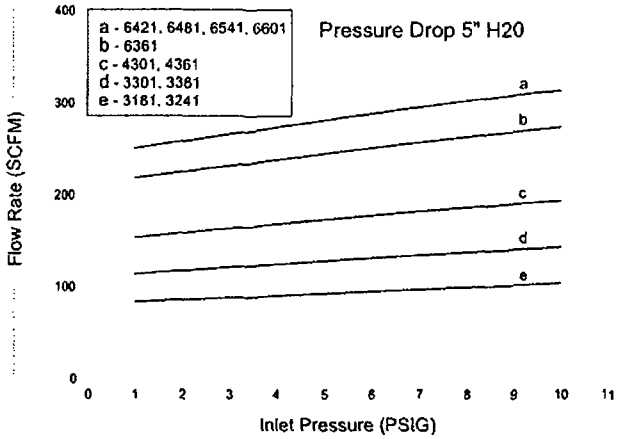

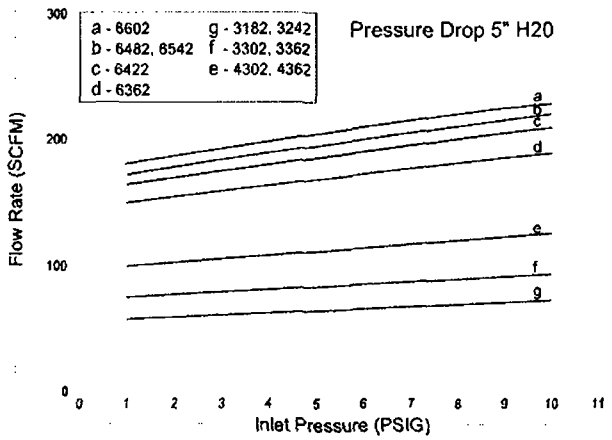

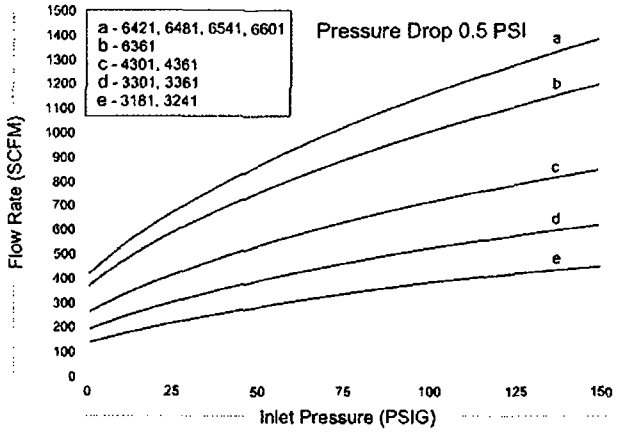

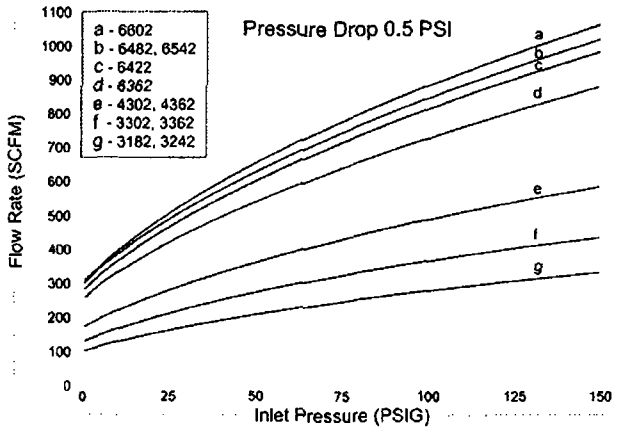

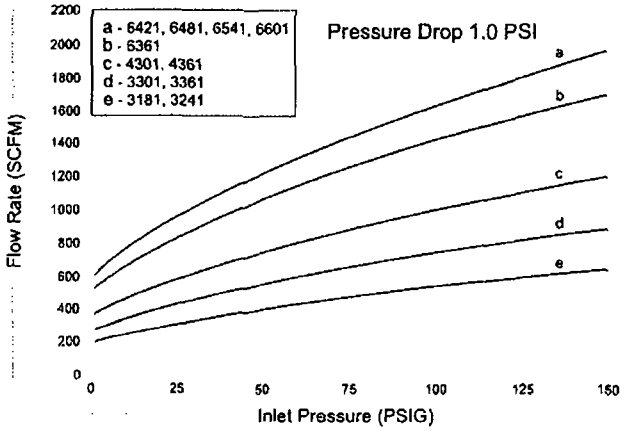

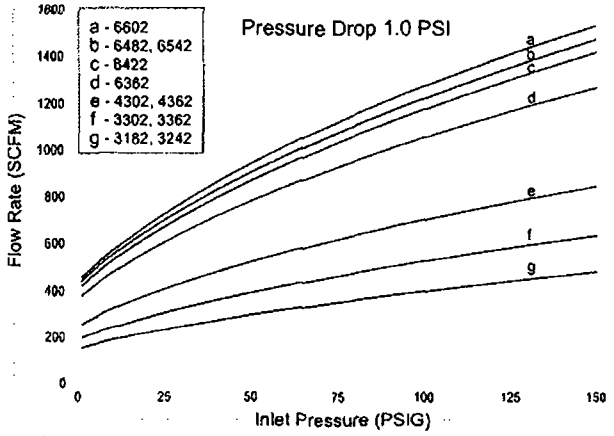

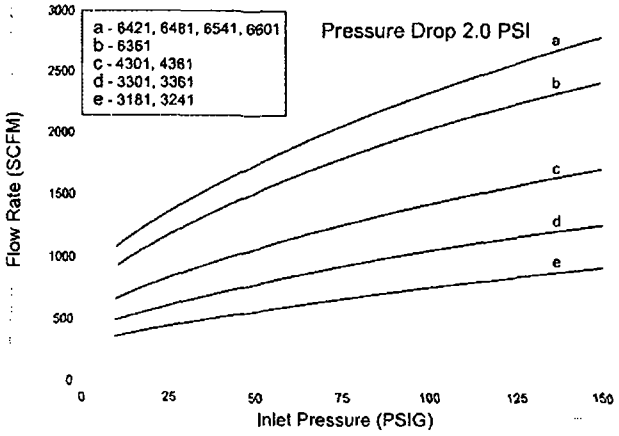

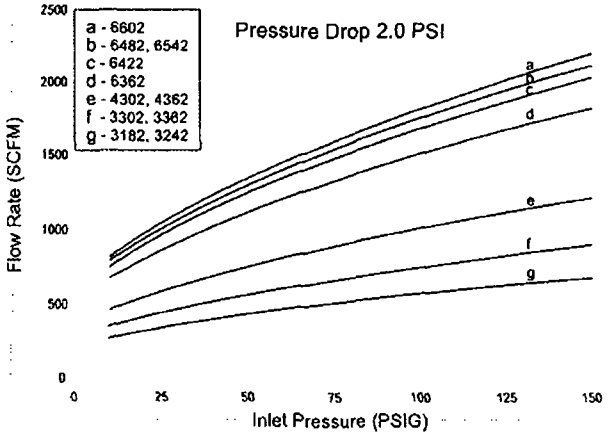

Copyright © 2001 American Industrial Heat Transfer, Inc.

PIPING HOOK UP

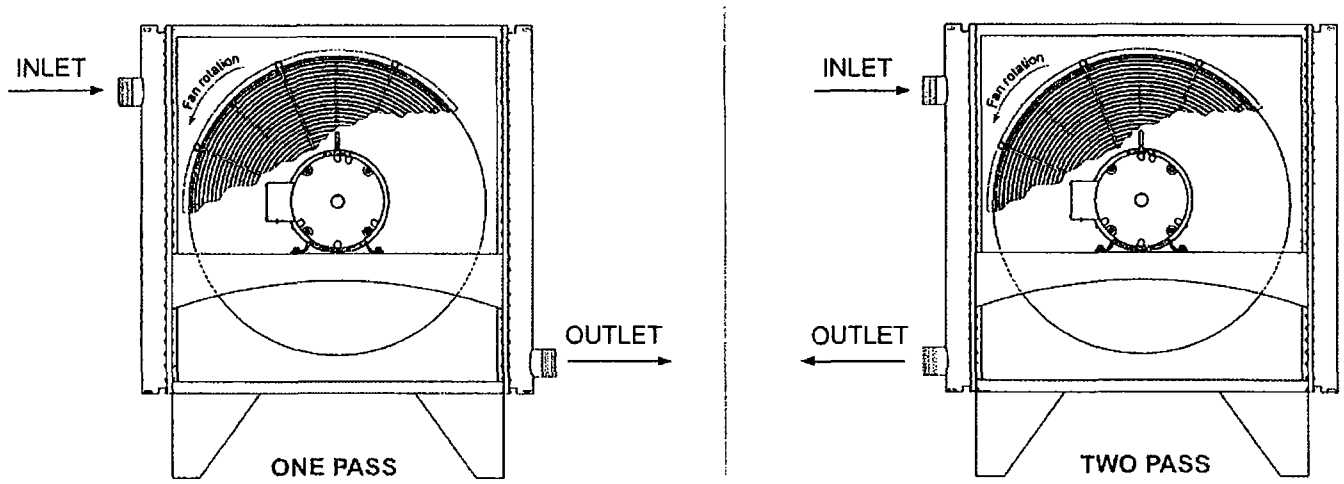

Receiving:

a) Inspect unit for any shipping damage before uncrating. Indicate all damages to the trucking firms' delivery person and mark it on the receiving bill before accepting the freight. Make sure that the core and fan are not damaged. Rotate the fan blade to make sure that it moves freely. *Since the warranty is based upon the unit date code located on the model identification tag, removal or manipulation of the identification tag will void the manufacturers warranty.*

b) When handling the ACA heat exchanger, special care should be taken to avoid damage to the core and fan. All units are shipped with wood skids for easy forklift handling

c) Standard Enamel Coating: American Industrial provides its standard products with a normal base coat of oil base air cure enamel paint. The enamel paint is applied as a temporary protective and esthetic coating prior to shipment. While the standard enamel coating is durable, American Industrial does not warrantee it as a long-term finish coating. It is strongly suggested that a more durable final coating be applied after installation or prior to long-term storage in a corrosive environment to cover any accidental scratches, enhance esthetics, and further prevent corrosion. It is the responsibility of the customer to provide regular maintenance against chips, scratches, etc... and regular touch up maintenance must be provided for long-term benefits and corrosion prevention.

Installation:

a) American Industrial recommends that the equipment supplied should be installed by qualified personal who have solid understanding of system design, pressure and temperature ratings, and piping assembly. Verify the service conditions of the system prior to applying any ACA series cooler. If the system pressure or temperature does not fall within the parameters on ACA rating tag located on the heat exchanger, contact our factory prior to installation or operation.

b) In order for the heat exchanger to properly function, installation should be made with minimum airflow obstruction distance of not less than twenty (20) inches on both fan intake and exiting side of the heat exchanger.

c) Process piping should be as indicated above with the process flow entering into the upper port and exiting out the lower port (see illustration). This configuration will allow for condensate moisture to drain completely from the equipment. It is recommended that an air separator or automatic drip leg be applied to the outlet side of the heat exchanger to trap any moisture that develops.

d) Flow line sizes should be sized to handle the appropriate flow to meet the system pressure drop requirements. If the nozzle size of the heat exchanger is smaller than the process line size an increased pressure differential at the heat exchanger may occur.

e) ACA series coolers are produced with both brazed ACA-3181 through ACA-4362, and serviceable core® ACA-6301 through ACA-6602 style coils. A brazed construction coil does not allow internal tube access. A serviceable core® will allow full accessibility to the internal tubes for cleaning and maintenance. ACA series coolers are rated for 150 PSIG working pressure, and a 400°f working temperature.

f) Special Coatings: American Industrial offers as customer options, Air-Dry Epoxy, and Heresite (Air-Dry Phenolic) coatings at additional cost. American Industrial offers special coatings upon request, however American Industrial does not warrantee coatings to be a permanent solution for any equipment against corrosion. It is the responsibility of the customer to provide regular maintenance against chips, scratches, etc... and regular touch up maintenance must be provided for long-term benefits and corrosion prevention.

g) Electric motors should be connected only to supply source of the same characteristics as indicated on the electric motor infor-

Copyright © 2001 American Industrial Heat Transfer, Inc.

mation plate. Prior to starting, verify that the motor and fan spin freely without obstruction. Check carefully that the fan turns in the correct rotation direction normally counter clockwise from the motor side (fan direction arrow). Failure to operate the fan in the proper direction could reduce performance or cause serious damage to the heat exchanger or other components. Fan blades should be rechecked for tightness after the first 100 hours of operation.

Maintenance

Regular maintenance intervals based upon the surrounding and operational conditions should be maintained to verify equipment performance and to prevent premature component failure. Since some of the components such as, motors, fans, load adapters, etc... are not manufactured by American Industrial maintenance requirements provided by the manufacture must be followed.

a) Inspect the entire heat exchanger and motor/fan assembly for loosened bolts, loose connections, broken components, rust spots, corrosion, fin/coil clogging, or external leakage. Make immediate repairs to all affected areas prior to restarting and operating the heat exchanger or its components.

b) Heat exchangers operating in oily or dusty environments will often need to have the coil cooling fins cleaned. Oily or clogged fins should be cleaned by carefully brushing the fins and tubes with water or a non-aggressive degreasing agent mixture (Note: Cleaning agents that are not compatible with copper, brass, aluminum, steel or stainless steel should not be used). A compressed air or a water stream can be used to dislodge dirt and clean the coil further. Any external dirt or oil on the electric motor and fan assembly should be removed. Caution: Be sure to disconnect the electric motor from its power source prior to doing any maintenance.

c) In most cases it is not necessary to internally flush the coil. In circumstances where the coil has become plugged or has a substantial buildup of material, flushing the coil with water or a solvent may be done. Flushing solvents should be non-aggressive suitable for the materials of construction. Serviceable Core® models can be disassembled and inspected or cleaned if required.

d) Most low horsepower electric motors do not require any additional lubrication. However, larger motors must be lubricated with good quality grease as specified by the manufacture at least once every 6-9 months or as directed by the manufacture. T.E.F.C. air ventilation slots should be inspected and cleaned regularly to prevent clogging and starving the motor of cooling air. To maintain the electric motor properly see the manufactures requirements and specifications.

e) Fan blades should be cleaned and inspected for tightness during the regular maintenance schedule when handling a fan blade care must be given to avoid bending or striking any of the blades. Fan blades are factory balanced and will not operate properly if damaged or unbalanced. Damaged fan blades can cause excessive vibration and severe damage to the heat exchanger or drive motor. Replace any damaged fan with an American industrial suggested replacement.

f) ACA heat exchanger cabinets are constructed using 7ga. through 18ga. steel that may be bent back into position if damaged. Parts that are not repairable can be purchased through American Industrial.

g) Coil fins that become flattened can be combed back into position. This process may require removal of the coil from the cabinet.

h) It is not advisable to attempt repairs to brazed joints of a brazed construction coil unless it will be done by an expert in silver solder brazing. Brazed coils are heated uniformly during the original manufacturing process to prevent weak zones from occurring. Uncontrolled reheating of the coil may result in weakening of the tube joints surrounding the repair area. In many instances brazed units that are repaired will not hold up as well to the rigors of the system as will a new coil. American Industrial will not warranty or be responsible for any repairs done by unauthorized sources. Manipulation in any way other than normal application will void the manufactures warranty.

i) Units containing a Serviceable Core® have bolted manifold covers that can be removed for cleaning or repair purposes.

Servicing Sequence

American Industrial has gone to great lengths to provide components that are repairable. If the ACA unit requires internal cleaning or attention the following steps will explain what must be done to access the internal tubes. Be sure to order gasket kits or repair parts prior to removal and disassembly to minimize down time.

a) To clean the internal tubes first remove all connection pipes from the unit.

b) Be sure the unit is drained of all water etc...

c) Place the ACA unit in an area that it can be accessed from all sides.

d) Remove the manifold cover bolts and hardware and place them into a secure place.

e) The manifold covers are tightly compressed and may need some prying to separate them from the gasket, physically remove the cover assemblies from both sides.

f) The tubes are now accessible for cleaning. We suggest a mild water-soluble degreaser be used with a brush. Tubing I.D. is .325 a plastic bristle brush on a rod will work best for cleaning the tubes. Steel brushes should be avoided since the steel is harder than the copper tubing and may heavily score the tubes if used.

g) If there are any leaking tubes you may plug them be forcing a soft metal plug into the hole and tapping it tight. You may in some cases weld the leaking tube shut however, care should be taken since excessive heat may cause surrounding tube joints to loosen and leak.

h) When finished reattach the manifold covers using new gaskets, bolts, and hardware. We suggest using a torque wrench to final tighten the bolts. *For 5/16" bolts 22-23 ft.-lbs, for 3/8" bolts to 38-42 ft.-lbs.* Since bolts and hardware can physically fatigue during application we suggest new bolt kits be used when reassembling.

Copyright © 2001 American Industrial Heat Transfer, Inc.

Limited Warranty

Seller makes no warranties expressed or implied, including but not by way of limitation, any implied warranty of merchantability and any implied warranty of fitness for a particular purpose, on any order except that seller warrants title to all goods furnished by seller and except that seller warrants for a period of one year from the date mark located on the seller's identification tag that all goods described on seller's acknowledgment of purchaser's purchase order will be manufactured in accordance with the specifications, if any, set forth in said purchase order and expressly accepted in seller's acknowledgment subject to seller's standard manufacturing variations and practices. In the case of components or accessories furnished by suppliers to seller, purchaser's warranty from seller shall be limited to the warranty of the component or accessory supplier. The foregoing warranties are the sole and exclusive warranties applicable to the goods delivered under this order, and all other warranties, express or implied, including without limitation any warranty of merchantability, are hereby expressly disclaimed and negated. Without limiting the generality of the foregoing, purchaser acknowledges that seller's products are not packaged or protected for long periods of storage and thus may corrode or rust over time.

Limitation of Purchaser's Remedies; Exclusive of Damages

Purchaser's remedies with respect to any claim arising out of any order, any goods delivered pursuant to any order and expressly accepted in seller's acknowledgment, or seller's performance in connection with any order, including, without limitation, any claim arising out of any recall, defect or alleged defect in any goods or services furnished by seller, shall be limited exclusively to the right of repair or replacement of such goods or services, at seller's option. Without in any way limiting the generality of the foregoing, in no event shall seller be liable for any consequential or incidental damages, including, without limitation, any loss of anticipated profits incurred by purchaser with respect to any goods or services furnished by seller, or any damages arising from injuries to persons as a result of purchaser's or a third party's negligence. Seller's warranty does not cover failures resulting from the improper installation, mounting design or application or from corrosion. The provisions of this paragraph are a material term of this transaction.

Disputes

Seller and purchaser agree to submit any disputes regarding any order, any goods delivered pursuant to any order and expressly accepted in seller's acknowledgment, or seller's performance in connection with any order, including without limitation seller's limited warranty obligation, to mediation by an independent mediator to be mutually agreed upon by seller and purchaser. The cost of such mediation shall be borne equally by seller and purchaser. In the event such mediation does not resolve their dispute, seller and purchaser agree to submit such dispute to an independent arbitrator, to be mutually agreed upon by seller and purchaser or, otherwise, chosen by the mediator. Seller and purchaser agree that all mediation and arbitration shall be conducted in Zion, Illinois. The non-prevailing party at the arbitration shall pay the prevailing party's attorneys' fees and costs incurred in participating in the arbitration.

Governing Law

Seller and Purchaser's agreement shall be governed by and interpreted in accordance with the laws of the State of Illinois of the United States of America. Manufacture, shipment and delivery are subject to any prohibition, restriction, priority, allocation, regulation or condition imposed by or on behalf of the United States of America or any other governmental body with appropriate jurisdiction which may prevent or interfere with fulfillment of any order.

Permissible Variations

Goods shipped by Seller shall be within the limits and sizes published by Seller, subject, however, to Seller's right to ship overages or underages in accordance with Seller's standard practices and goods shipped by Seller will be subject to standard variations provided such variations are non-functional or are not material in nature.

Technical Assistance and Advice

Seller's warranty shall not be enlarged and no obligation or liability shall arise out of Seller's rendering of technical assistance, technical advice facilities, service or recommendations made by Seller in connection with Purchaser's purchases of the goods hereunder. Said technical services, advice, assistance or recommendations made by Seller or any representative of Seller concerning any use or application of any goods furnished hereunder is believed to be reliable, but SELLER MAKES NO WARRANTY, EXPRESS OR IMPLIED, AND THE SAME ARE HEREBY EXPRESSLY DISCLAIMED as to the same and the results to be obtained. Purchaser assumes all responsibility for loss or damage resulting from the use of any such goods.

For standard dimensional information please refer to our corresponding product brochure. For information regarding a special engineered product please contact our company. All specially engineered products specifying a 5-digit suffix will be supplied with a drawing for customer approval at the time of purchase. Additional costs may be added if requirements should change from the original specifications, or have been initially overlooked. Please be aware that "normal shipping" lead-times are estimated based upon components in stock at the time of quotation, extended shipping time up to as much as two weeks or more may be required if changes to inventory availability occur. Cancellation charges will be incurred for special order equipment.

American Industrial Heat Transfer, Inc. provides a complete installation manual included with each unit sold containing a complete copy of our 3 page *"Terms and Conditions of Sale"*. If an installation manual was not received or misplaced for your equipment additional copies may be acquired. To receive a copy of American Industrial Heat Transfer, Inc. Installation Manual including *"Standard Terms and Conditions of Sale"* please refer to the following sources. 1) The American Industrial product catalog. 2) Our Internet site *www.aihti.com*, 3) Contact American Industrial directly at 1-847-731-1000.

Copyright © 2001 American Industrial Heat Transfer, Inc.

AVAILABLE PRODUCTS

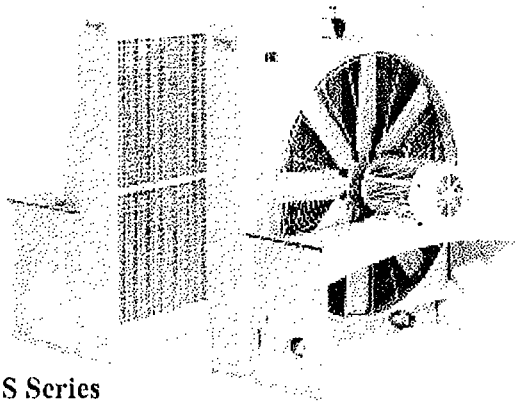

AOCS Series

• *Durable desin offered in eight sized available from stock for fast delivery.*

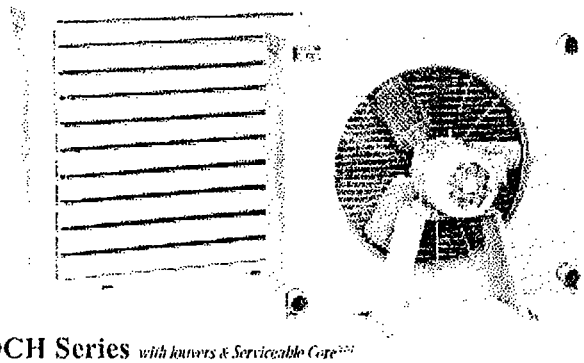

AOCH Series *with louvers & Serviceable Core™*

• *Industrial high capacity air/oil heat exchanger available in 8 standard sizes with electric or hydraulic drive.*

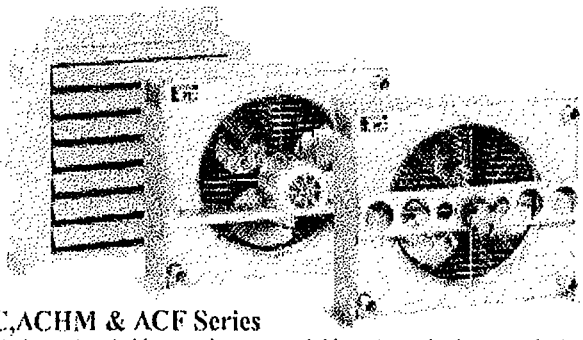

AC,ACHM & ACF Series

• *Industrial air/oil heat exchanger available in 8 standard sizes with electric or hydraulic drive.*

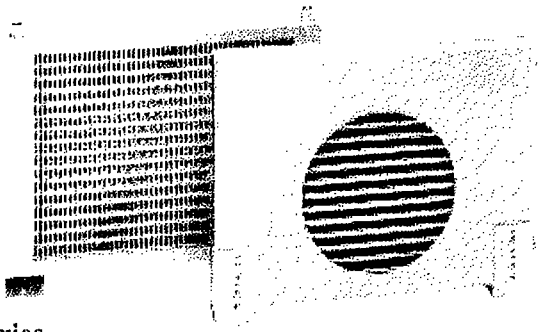

BM Series

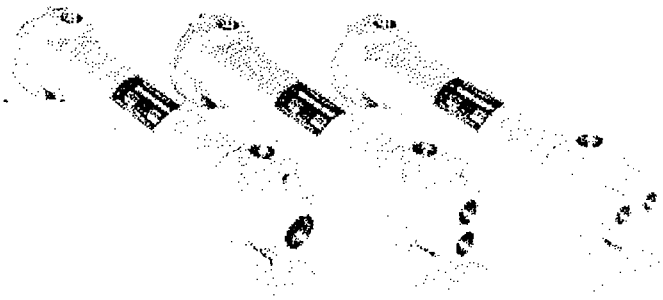

AB Series

• *Variety of sizes from 2"-8" diameters, available in brass, 316L Stainless Steel.*

CS Series

• *Variety of sizes from 2"-8" diameters, available in a wide range of materials.*

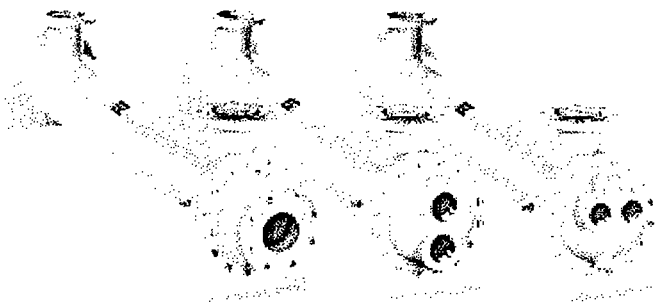

AB 2000 Series

• *High capacity shell & tube heat exchangers, available in sizes from 10"-32" diameters.*

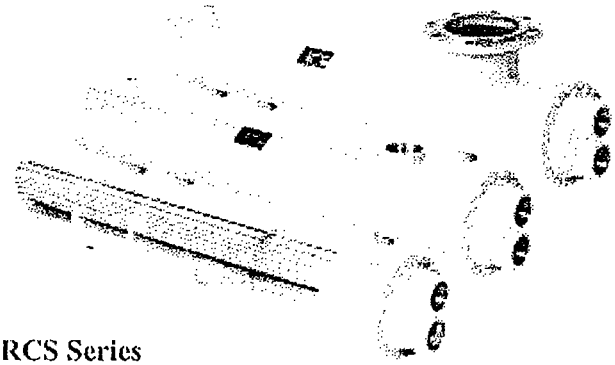

URCS Series

• *U-tube heat exchangers for steam services with removable tubes bundle in copper, 316L SS, or 90/10 Cu Ni.*

3905 Route 173 Zion, Illinois 60099
Telephone: (800) 338-5959 or (847) 731-1000
FAX: (847) 731-1010

Copyright © 2000 American Industrial Heat Transfer, Inc.

American Industrial Heat Transfer Inc.

Manufacturers of Quality Heat Exchangers

Series RM Rate-Master® Flowmeters

Polycarbonate, Gas flow from .1-1800 SCFH, Water Flows to 10 GPM

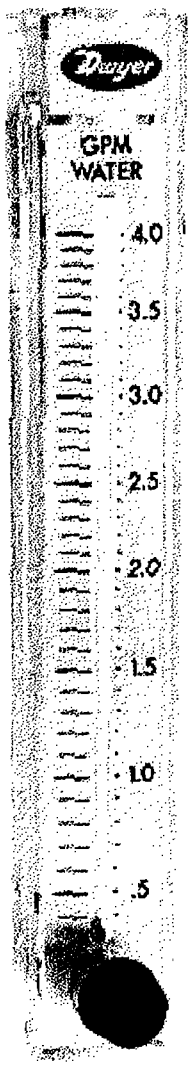

Model RMC-SSV10" scale, 15¾" high

Model RMB-SSV 5" scale, 8¾" high

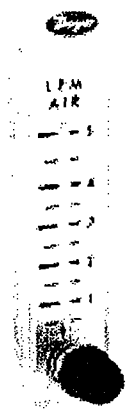

Model RMA-SSV 2" scale, 4 1/16" high

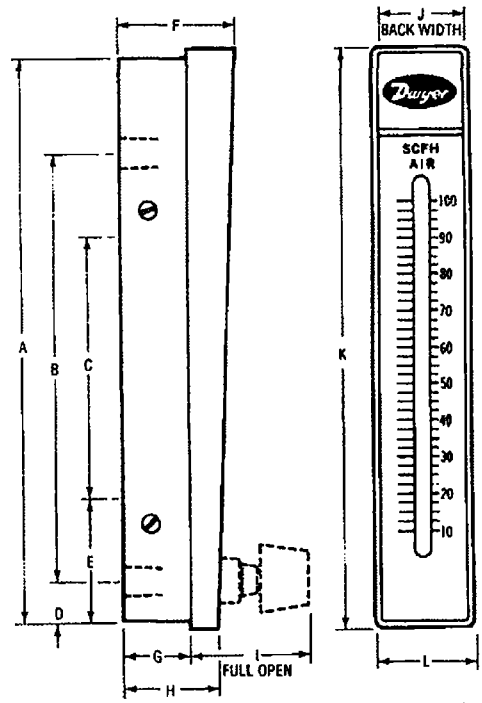

DIMENSION IN INCHES			
	Model RMA	Model RMB	Model RMC
A	4 3/16	8 1/2	15 1/4
B	3 ¼ NPT Conn.	6 1/2 ¼ NPT Conn.	12 1/4 ½ NPT Conn.
C	1 3/4 10-32 Thds.	3 11/16 ¼-20 Thds.	8 1/2 ¼-24 Thds.
D	⅜	¾	1
E	1 1/16	1 3/4	2 1/4
F	1 1/16	1 3/4	2 1/4
G	¾	1	1 7/16
H	1	1 1/4	1 11/16
I (OPEN)	1 3/4	1 13/16 (BV or SSV MODELS ONLY)	2 1/4
J	¾	1 1/4	2
K	4 13/16	8 3/4	15 3/4
L	1	1 1/2	2 1/4

The Dwyer Rate-Master® line of direct reading precision flowmeters incorporates many unique user features at moderate cost. These low cost flowmeters are ideal for general use.

Easy to read design – The direct reading scales eliminate troublesome conversions. The scales are brushed aluminum, coated with epoxy and the graduations are on both sides of the indicating tube. Special integral flow guides stabilize the float throughout the range to keep it from hunting or wandering in the bore. The float is highly visible against a white background.

Construction assures accuracy – All Rate-Master® flowmeter bodies are injection molded of tough, clear, shatter-proof polycarbonate plastic around a precision tapered pin. The result is accurate and repeatable readings. The single piece plastic body is mounted to a stainless steel back bone into which pipe thread inserts are welded to absorb piping torque. Precision metering valves of brass or stainless steel (specify BV or SSV on order) are available as an optional extra and permit precise flow adjustments. For vacuum applications, Model RMA units are available with top mounted valves (specify TMV). The small Series RMA models are accurate within ±4% of full scale reading; Series RMB within ±3%; large Series RMC within ±2%.

Installation is simple – The Rate-Master® can be neatly panel mounted to keep flow tube centers in the same plane as the panel surface or surface mounted on the panel by means of tapped holes in the backbone. When through-panel mounted, the bezel automatically positions the instrument at the correct depth in the panel cutout. Surface mounted units can also be held in place by the piping. All mounting hardware plus installation and operating instructions are included.

Easy-to-Interchange bodies – Within a given Series Rate-Master® flowmeter bodies can be instantly interchanged. Simply "unplug" the body from backbone and replace it with another. "O" rings provide a tight seal on inlet and outlet. Piping remains undisturbed. Interchangeability is useful where different scale ranges are sometimes required at the same location in the laboratory or plant.

Cleaning is easy – To release the plastic flowmeter body from the stainless steel backbone, just remove four screws. Pipe thread flow connections remain undisturbed. Remove the slide cover and the plug ball stop, clean the flow tube with soap and water and reassemble. It's that simple.

How To Order

Series-Range No.-Valve-Option
Example: RMA-2-SSV
Series RMA with .1-1 SCFH Air Range & Stainless Steel Valve

Model RMA
RMA-X, Standard RMA
RMA-X-BV, RMA with Brass Valve
RMA-X-SSV, RMA with Stainless Steel Valve
RMA-X-TMV, RMA with Top Mounted Valve

Model RMB
RMB-X, Standard RMB
RMB-X-BV, RMB with Brass Valve
RMB-X-SSV, RMB with Stainless Steel Valve

Model RMC
RMC-X, Standard RMC
RMC-X-BV, RMC with Brass Valve
RMC-X-SSV, RMA with Stainless Steel Valve

POPULAR RANGES

Model RMA-2" Scale		Model RMB-5" Scale		Model RMC -10" Scale	
Range SCFH Air	Range No.	Range SCFH Air	Range No.	Range SCFH Air	Range No.
.05-.5	1	.5-5	49	5-50	101
.1-1	2	1-10	50	10-100	102
.2-2	3	3-20	51	20-200	103
.5-5	4	4-50	52	40-400	104
1-10	5	10-100	53	60-600	105
2-20	6	20-200	54	100-1000	106
5-50	7	40-400	55	120-1200	107
10-100	8	50-500	56	200-1800	108
15-150	9	60-600	57	SCFM Air	
20-200	10	Gal. Water per hour		1-10	121
CC Air/min.				2-20	122
5-50	151*	1-12	82	4-30	123
10-100	150*	1-20	83		
30-240	11	4-40	84	Gal. Water per hour	
50-500	12	10-100	85		
100-1000	13	SCFH & LPM Air		2-20	134
200-2500	14	1.2-10/0.6-5	50D	8-90	135
LPM Air		3-20/1.5-9.5	51D	Gal.Water per minute	
.5-5	26	4-50/2-23	52D		
1-10	21	10-100/5-50	53D	.1-1	141
2-25	22	20-200/5-95	54D	.2-2.2	142
5-50	23	GPH & LPM Water		.4-4	143
5-70	24	1-12/0.06-0.76	82D	.8-7	144
10-100	25	1-20/0.065-1.25	83D	1.2-10	145
CC Water/min.		10-100/0.8-6.2	85D		
5-50	32				
10-110	33				
20-300	34				
Gal.Water/hr					
1-11	42				
2-24	43				
4-34	44				
5-50	45				

*Accuracy ±8%

SPECIFICATIONS

Service: Compatible gases and liquids.
Wetted Materials: Body: Polycarbonate
O-ring: Neoprene & Buna-N.
Metal Parts: Stainless Steel (except for optional brass valve).
Float: Stainless steel, black glass, aluminum, K monel, tungsten carbide depending on range.
Temperature Limit: 130°F (54°C).
Pressure Limit: 100 psi (6.9 bar).
Accuracy: RMA: 4%, RMB: 3%, RMC: 2% of full scale.
Process Connection: RMA: 1/8", RMB: 1/4", RMC: 1/2" female NPT.
Weight: RMA: 4 oz (113.4 g), RMB: 13 oz (368.5 g), RMC: 39 oz (1105.6 g).

CAUTION

Dwyer Rate-Master® flowmeters are designed to provide satisfactory long term service when used with air, water, or other compatible media. Refer to factory for information on questionable gases or liquids. Caustic solutions, anti-freeze (ethylene glycol) and aromatic solvents should definitely not be used.

OPTIONS & ACCESSORIES

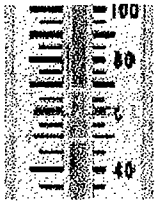

Adjustable pointer flags – Red lined pointer flags provide quick visual reference to a required flow level. Of clear plastic, they snap into place inside bezel and slide to desired level.

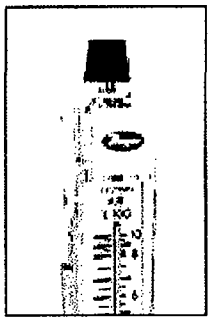

Top Mounted Metering Valves – Same precision construction for vacuum applications. RMA models only.

Specials — Special ranges, scales, mounting arrangements, etc., are available on special order, or in OEM quantities.

RMA-X-APF, Adjustable Pointer Flag for RMA Series
RMB-X-BPF, Adjustable Pointer Flag for RMB Series
RMA-X-CPF, Adjustable Pointer Flag for RMC Series

RKA, Regulator Kit for RMA Series
RK-RMB, Regulator Kit for RMB Series

Measurement Accessories

Blower Connection Key
NPT – American National Standard Taper Pipe Thread (Male)
NPSC – American National Standard Straight Pipe Thread for Coupling (Female)
SO – Slip On (Smooth – No Threads)

Air Flow Meter

FEATURES

- Direct reading in SCFM
- Low pressure drop (2-4" typical) across the flow meter
- Non-clogging, low impedance air stream
- Light weight aluminum
- No moving parts
- Large easy-to-read dial
- Accurate within 2% at standard conditions
- Good repeatability
- Available in 2", 3" and 4" sizes
- Factory configured for quick installation
- .048" Allen key supplied for gauge adjustment

OPTIONS

- Corrosion-resistant version with Chem-Tough™ or in stainless steel
- FDA-approved Food Tough™ surface conversion

BENEFITS

- OPTIMIZE SYSTEM EFFICIENCY
  Measuring the correct air flow can assist you in fine-tuning to your system's optimal efficiency.
- BALANCE MULTI-PIPING SYSTEMS
  When evacuating CFM from more than one pipe, different run lengths or end system impedance can cause one pipe to handle more CFM than the other. With an accurate CFM reading, piping can be balanced by bleeding air in/out or by creating an extra impedance.
- DETECT CHANNELING OR PLUGGING
  For systems in which channeling or plugging can occur, a change in the CFM measured can help indicate the unseen changes in your system.

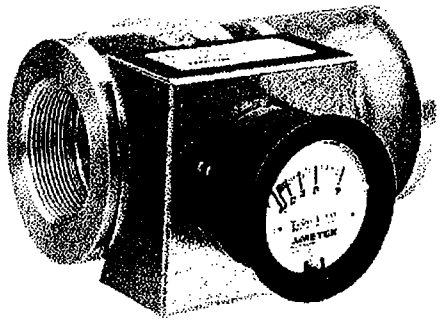

Current Models		Flow Range	B	C	D	E	F
Model	Part #	(SCFM)	Threads	Length	Width		
FM20C030Q	550599	6-30	2" - 11.5 NPSC	7.18"	7.0"	2.0"	3.75"
FM20C045Q	550600	9-45					
FM20C065Q	550601	13-65					
FM20C125Q	550602	25-125			5.6"		
FM20C175Q	550603	35-175					
FM20C225Q	550604	45-225					
FM30C250Q	550605	50-250	3" - 8 NPSC	7.52"	7.4"	2.5"	4.43"
FM30C350Q	550606	70-350					
FM30C475Q	550607	95-475					
FM40C450Q	550608	90-450	4" - 8 NPSC	8.00"	7.7"	2.7"	5.43"
FM40C600Q	550609	120-600					
FM40C850Q	550610	170-850					

Rev. 2/04

ROTRON® Regenerative Blowers

Blower Model Reference Key	
A = SPIRAL	E = DR/EN/CP 656, 6, 623, S7
B = DR/EN/CP 068, 083, 101, 202	F = DR/EN/CP 707, 808, 858, S9, P9 (Inlet Only)
C = DR/EN/CP 303, 312, 313, 353	G = DR/EN/CP 823, S13, P13 (Inlet Only)
D = DR/EN/CP 404, 454, 513, 505, 555, 523	H = DR/EN/CP 909, 979, 1223, 14, S15, P15 (Inlet Only)

Measurement Accessories

TYPICAL FLOW METER ARRANGEMENT

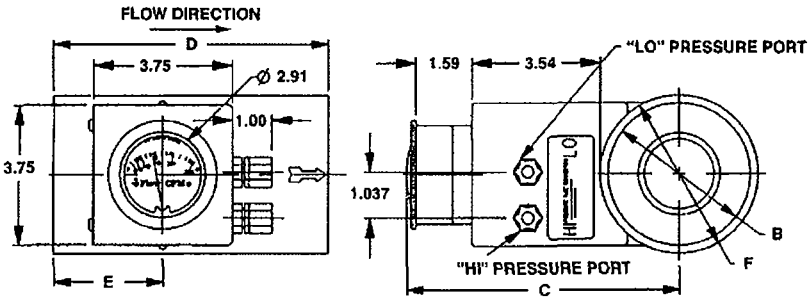

ANALOG FLOW METER

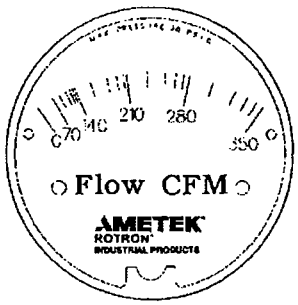

TYPICAL GAUGE FACE

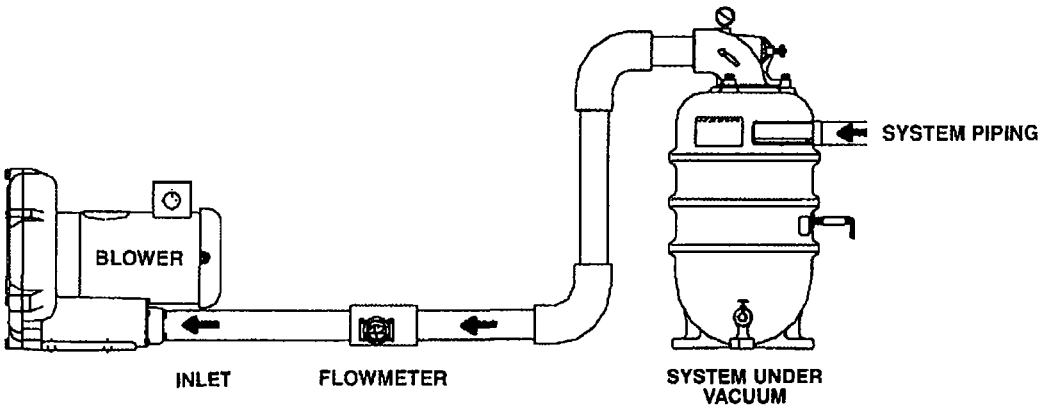

HIGH TEMPERATURE/PRESSURE CORRECTION

$$SCFM_2 = \frac{SCFM_1}{\sqrt{\left(\frac{14.7}{Pf_2}\right) \times \left(\frac{530}{Tf_2 + 460}\right)}}$$

Pf_2 = Absolute Pressure in PSIA

Tf_2 = Temperature in °F

- Use on inlet to limit need to correct for high pressure or elevated outlet temperature
- Standard model limits = 140°F and 30 PSIG

HOW IT WORKS

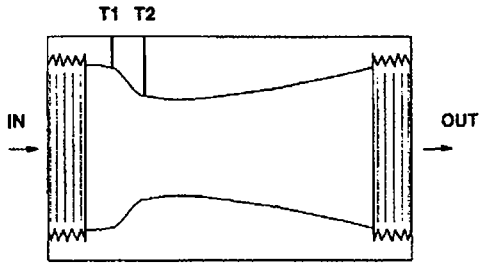

Rotron's flow meter is a venturi style design. After air enters the inlet, the pressure is measured in the T1 tap. The second tap, T2, measures the pressure at the throat. The differential between T1 and T2 registers across a special calibrated CFM gauge to provide accurate readings. The throat is then expanded back to the original size to keep pressure loss to under 2-4 IWG.

Filtration Accessories

Blower Connection Key
NPT – American National Standard Taper Pipe Thread (Male)
NPSC – American National Standard Straight Pipe Thread for Coupling (Female)
SO – Slip On (Smooth – No Threads)

Inlet Filter (Single Connection)

Inlet Filters protect the blower and the air distribution system from dust, and other airborne particles and contaminants. Normally used in pressure systems.

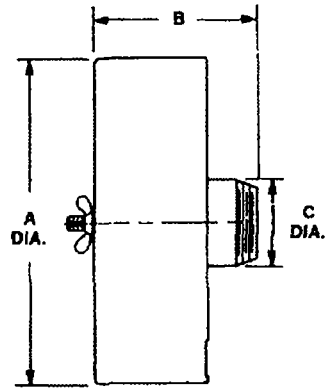

SPECIFICATIONS:

HOUSING – Steel
MEDIA – Polyester
EFFICIENCY – 97-98% (8 to 10 micron particle size)
FILTER ELEMENT – Replaceable (see filter elements)
NOTE: "Z" MEDIA (1 to 3 micron particle size) available

Standard Media Filter P/N	Filter Element	Reference Blower Model	Connection Inlet	Dimensions (Inches) A	B	C	Z Media Filter Part Number
477411	271078	A	2.00 SO	4.56	6.12	2.00	
516466	515132	B	1.00 NPT	6.00	6.50	1.00	517865
515122	515132	C,D	1.50 NPT	6.00	6.50	1.50	517866
515123	515133	E	2.00 NPT	7.75	7.25	2.00	517867
515124	515134	E	2.00 NPT	10.00	12.25	2.00	517868
515125	515134	F	2.50 NPT	10.00	12.50	2.50	517869
515145	515134	G	3.00 NPT	10.00	13.00	3.00	517870
515151	515135	H	4.00 NPT	10.00	14.00	4.00	517871
516511	516515	H	6.00 NPT	16.00	15.00	6.00	517872

Inline Filter (Dual Connection)

Inline Filters protect the blower from harmful dust and other particles that may be drawn into the blower through the air distribution system. Normally used in vacuum systems.

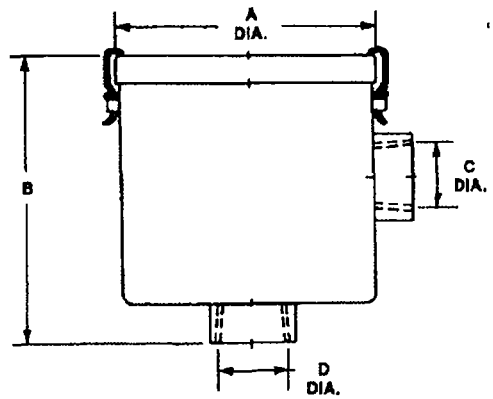

SPECIFICATIONS:

HOUSING – Steel
MEDIA – Polyester
EFFICIENCY – 97-98% (8 to 10 micron particle size)
FILTER ELEMENT – Replaceable (see filter elements)
NOTE: "Z" MEDIA (1 to 3 micron particle size) available

Standard Media Filter P/N	Filter Element	Reference Blower Model	Connection Inlet	Connection Outlet	Dimensions (Inches) A	B	C	D	Z Media Filter Part Number
271200	271078	A	1.75 SO	2.00 SO	5.25	8.31	2.00	1.75	
516461	516434	B	1.00 NPSC-F	1.00 NPSC-F	7.25	6.50	1.00	1.00	517886
515254	516434	C,D	1.50 NPSC-F	1.50 NPSC-F	7.00	6.50	1.50	1.50	517887
515255	516435	E	2.00 NPSC-F	2.00 NPSC-F	8.00	10.25	2.00	2.00	517888
515256	516435	F	2.50 NPSC-F	2.50 NPSC-F	8.00	10.25	2.50	2.50	517889
516463*	515135	G	3.00 NPT-M	3.00 NPT-M	14.00	26.50	3.00	3.00	517890
516465*	515135	H	4.00 NPT-M	4.00 NPT-M	14.00	27.00	4.00	4.00	517891
517611*	516515	H	6.00 NPT-M	6.00 NPT-M	18.00	28.00	6.00	6.00	517892

* Feature 1/4" threaded tap for gauge connection on inlet and outlet

Rev. 2/01

Blower Model Reference Key	
A = SPIRAL	E = DR/EN/CP 656, 6, 623, S7
B = DR/EN/CP 068, 083, 101, 202	F = DR/EN/CP 707, 808, 858, S9, P9 (Inlet Only)
C = DR/EN/CP 303, 312, 313, 353	G = DR/EN/CP 823, S13, P13 (Inlet Only)
D = DR/EN/CP 404, 454, 513, 505, 555, 523	H = DR/EN/CP 909, 979, 1223, 14, S15, P15 (Inlet Only)

Filtration Accessories

Filter Silencers (Single Connection)

* For Supplemental silencing only. (Used to augment existing muffling systems.)

Filter/Silencers reduce noise levels while ensuring clean air is provided to the blower and the air distribution system. Normally used in pressure applications.

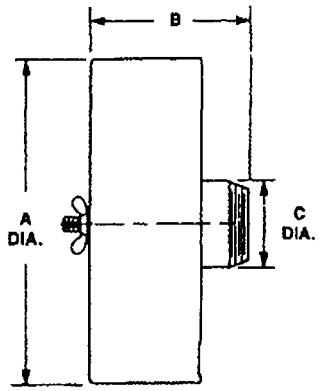

SPECIFICATIONS:

HOUSING – Steel
MEDIA – Polyester
EFFICIENCY – 97-98% (8 to 10 micron particle size)
FILTER ELEMENT – Replaceable (see filter elements)

Standard Media Filter P/N	Filter Element	Reference Blower Model	Connection Inlet	Dimensions (Inches) A	B	C	Z Media Filter Part Number
516487	515132	B	1.00 NPT	6.00	6.50	1.00	517878
516489	515132	C,D	1.50 NPT	6.00	6.50	1.50	517879
516491	515133	E	2.00 NPT	10.00	7.25	2.00	517880
516493	515134	E	2.00 NPT	10.00	12.25	2.00	517881
516495	515134	F	2.50 NPT	10.00	12.50	2.50	517882
516497	515134	G	3.00 NPT	10.00	12.50	3.00	517883
516499	515135	H	4.00 NPT	16.00	14.00	4.00	517884
516513	516515	H	6.00 NPT	16.00	15.00	6.00	517885

Filter Element

All Rotron Air Filters and Filter/Silencers have replaceable filter elements. The filter media is polyester designed for high efficiency over a wide spectrum of industrial applications. See filter element cross reference table.

Standard Replacement Filter Element Cross Reference Table					
Filter	Element	Filter	Element	Filter	Element
271200	271078	515158	515134	516489	515132
477411	271078	515254	516434	516491	515133
515122	515132	515255	516435	516493	515134
515123	515133	515256	516435	516495	515134
515124	515134	516461	516434	516497	515134
515125	515134	516463	515135	516499	515135
515145	515134	516465	515135	516511	516515
515151	515135	516466	515132	516513	516515
515157	515133	516487	515132	517611	516515

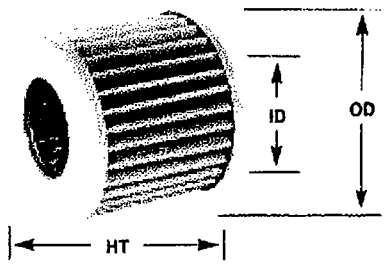

FOR DR BLOWER MODELS

Standard Media Part Number	Z Media Filter Part Number	ID (Inches)	OD (Inches)	HT (Inches)	Area (Sq/Ft)
515132	517873	3.00	4.38	4.75	1.5
515133	517874	3.63	5.88	4.75	2.3
515134	517875	4.63	5.88	9.50	4.5
515135	517876	4.75	7.88	9.63	8.3
516434	517893	2.56	5.00	4.75	2.0
516435	517894	3.50	5.88	8.75	4.5
516515	517877	8.00	11.75	9.63	19.0

Filtration Accessories

Blower Connection Key
NPT – American National Standard Taper Pipe Thread (Male)
NPSC – American National Standard Straight Pipe Thread for Coupling (Female)
SO – Slip On (Smooth – No Threads)

Moisture Separator™

By separating and containing entrained liquids, Rotron's moisture separator helps protect our regenerative blowers and the end treatment system from corrosion and mineralization damage. Recommended for all soil vacuum extraction applications.

SPECIFICATIONS:

SEPARATION METHOD – High Efficiency Cyclonic
RELIEF VALVE MATERIAL – Brass & Stainless Steel
FLOAT MATERIAL – Copper
FLOAT SWITCH – SPDT, Explosion-proof
NEMA 7&9, 5 Amp max.

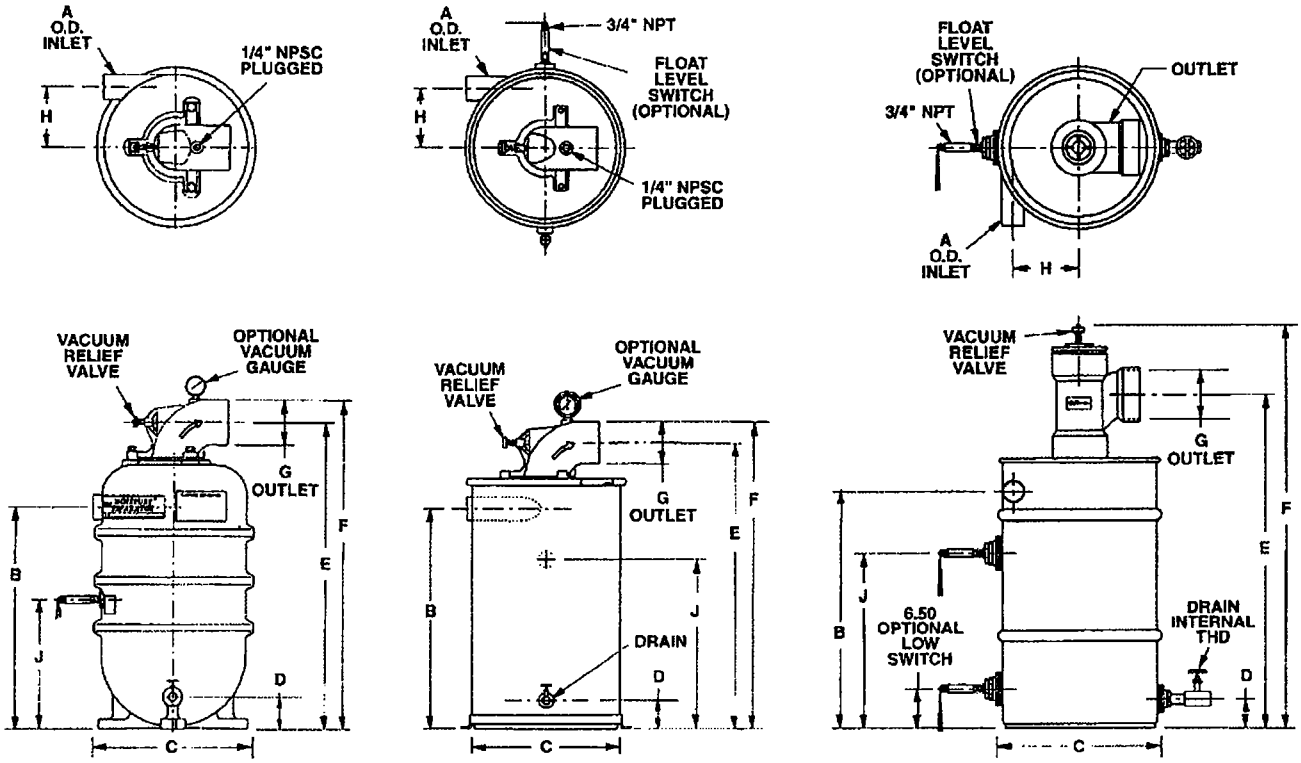

PLASTIC "P" DESIGN

METAL "D" DESIGN

METAL "B" DESIGN

Model	Part No.	CFM Max.	A Dia.	B	C Dia.	D	E	F	G Dia.	H	J Switch	Drain Internal THD	Shipping Weight
MS200PS	038519	200	2.38	22.46	16.00	3.25	31.05	33.30	4.50 OD	6.00	13.25	3/4" NPT	42 lb.
MS300PS	038520	300	2.88										
MS200DS	080086	200	2.00	22.12	16.75	2.75	27.92	30.17		6.56	12.62		
MS300DS	080087	300	2.50							6.81			
MS350BS	038357	350	3.25	28.00	23.00	4.00	37.25	39.50		9.75	17.50	1" NPT	82 lb.
MS500BS	080660	500					37.37	54.50	6.63 ID				95 lb.
MS600BS	080659	600	4.00	27.00						9.25			96 lb.
MS1000BS	038914	1000	6.00	31.00	27.00		47.32	51.70	8.62 OD	10.00	19.88		150 lb.

Models without float switch available. Metal MS200/300DS models are not the standard stocked, but are available.

Rev. 2/01

Blower Model Reference Key	
A = SPIRAL	E = DR/EN/CP 656, 6, 623, S7
B = DR/EN/CP 068, 083, 101, 202	F = DR/EN/CP 707, 808, 858, S9, P9 (Inlet Only)
C = DR/EN/CP 303, 312, 313, 353	G = DR/EN/CP 823, S13, P13 (Inlet Only)
D = DR/EN/CP 404, 454, 513, 505, 555, 523	H = DR/EN/CP 909, 979, 1223, 14, S15, P15 (Inlet Only)

2.0 Moisture Separator™ Specifications

2.1 DUTY

The moisture separator shall be designed for use in a soil vapor extraction system capable of continuous operation with a pressure drop of less than six inches of water at the rated flow of _____ SCFM. The separator shall be capable of operation under various inlet conditions ranging from a fine mist to slugs of water with high efficiency.

2.2 PRINCIPLE OF OPERATION

The moisture separator shall incorporate cyclonic separation to remove entrained water. The separator must protect against an overflow by fail safe mechanical means. An electrical switch or contact(s) alone is not an acceptable means of protection against overflow, but is a good backup.

2.3 CONSTRUCTION

The body of the moisture separator shall be constructed of heavy wall plastic or heavy gauge cold rolled steel. The steel interior and exterior shall be epoxy (powder) coated to resist abrasion, corrosion, and chipping that might expose the surface. The inlet shall be tangentially located and welded to the body. The outlet port shall be constructed of PVC or cast aluminum alloy, flanged and sealed to the center of the top of the separator. The separator shall incorporate a non-sparking copper float ball and an adjustable relief valve to protect against overflow and overheating the blower.

2.4 CAPACITY AND DIMENSIONS

The moisture separator must have a liquid capacity of _____ gallons. The inlet shall be _____ inch OD slip-on type. The outlet shall be _____ inch OD slip-on type.

For DR/EN/CP Blower Model	Selector Moisture Separator Model	Liquid-holding Capacity (gallons)	Inlet (OD)	Outlet	Max Vacuum Allowed (IHg)
404 454 505 513 523 555 623 823	MS200PS	7	2.38	4.5" OD	12
	MS200DS	10	2.0		22
656 6 707	MS300PS	7	2.88		12
	MS300DS	10	2.5		22
808	MS350BS	40	3.25		
858 1223	MS500BS			6.63" ID	
909	MS600BS		4.0"		
979 14	MS1000BS		6.0"	8.62" OD	

2.5 PRESSURE DROP

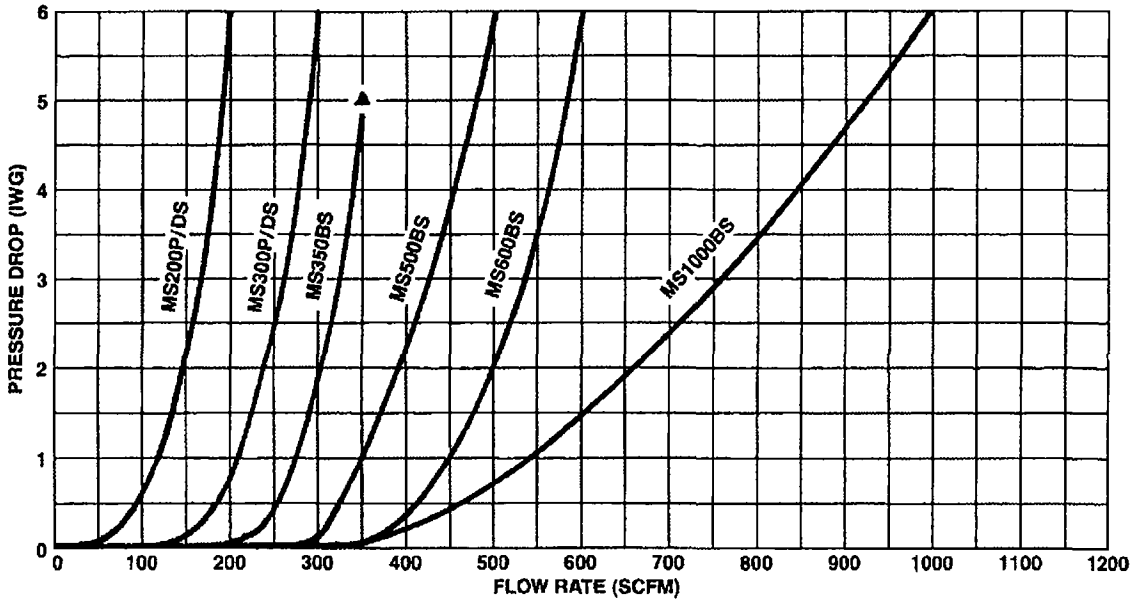

APPENDIX E

Engineering Calculations

Pressure Drop Calculation - Sparge Feed Line

Intelidata

80 Pickett District Road, New Milford, CT

PRESSURE DROP CALCULATION

'E RUN	W LBS/HR	% O2	MW	SCFM (@70 F)	TEMP DEG F	PRES. PSIA	ACFM	DENSITY LBS/SQFT	ID INCHES	/ELOCIT FPS	VISC. CP	Nre	FF	PRES DROI PSI/100FT	EQUIV. LENGTH FEET	PRESS. DROP PSI
A TO B	1140.0	20.9	28.8	255	120.0	26.70	154	0.12367	3.00	52.19	0.0200	119890	0.02042	0.2966	53.30	0.1581
B TO C	1140.0	20.9	28.8	255	120.0	26.54	155	0.12294	3.00	52.50	0.0200	119890	0.02042	0.2984	55.50	0.1656
C TO D	1140.0	20.9	28.8	255	120.0	26.38	156	0.12217	3.00	52.83	0.0200	119890	0.02042	0.3003	78.50	0.2357
D TO E	1140.0	20.9	28.8	255	120.0	26.14	157	0.12108	3.00	53.31	0.0200	119890	0.02042	0.3030	107.50	0.3257
E TO F	1140.0	20.9	28.8	255	120.0	25.81	159	0.11957	3.00	53.98	0.0200	119890	0.02042	0.3068	52.50	0.1611
F TO G	1140.0	20.9	28.8	255	120.0	25.65	160	0.11882	3.00	54.32	0.0200	119890	0.02042	0.3087	35.80	0.1105
G TO H			28.0	0		25.54	0	#DIV/0!		#DIV/0!	0.0200	#DIV/0!	#DIV/0!	#DIV/0!	0.00	#DIV/0!
H TO I			28.0	0		#DIV/0!	#DIV/0!	#DIV/0!		#DIV/0!	0.0200	#DIV/0!	#DIV/0!	#DIV/0!	0.00	#DIV/0!
I TO J			28.0	0		#DIV/0!	#DIV/0!	#DIV/0!		#DIV/0!	0.0200	#DIV/0!	#DIV/0!	#DIV/0!	0.00	#DIV/0!
J TO K			28.0	0		#DIV/0!	#DIV/0!	#DIV/0!		#DIV/0!	0.0200	#DIV/0!	#DIV/0!	#DIV/0!	0.00	#DIV/0!
K TO L			28.0	0		#DIV/0!	#DIV/0!	#DIV/0!		#DIV/0!	0.0200	#DIV/0!	#DIV/0!	#DIV/0!	0.00	#DIV/0!
L TO M			28.0	0		#DIV/0!	#DIV/0!	#DIV/0!		#DIV/0!	0.0200	#DIV/0!	#DIV/0!	#DIV/0!	0.00	#DIV/0!
																1.1568

Pressure Drop Calculation - ASW-1

Intelidata

80 Pickett District Road, New Milford, CT

PRESSURE DROP CALCULATION

'E RUN	W LBS/HR	% O2	MW	SCFM (@70 F)	TEMP DEG F	PRES. PSIA	ACFM	DENSITY LBS/FT^3	ID INCHES	/ELOCIT FPS	VISC. CP	Nre	FF	PRES DRO PSI/100FT	EQUIV. LENGTH FEET	PRESS. DROP PSI
A TO B	65.0	20.9	28.8	15	120.0	26.70	9	0.12367	1.50	11.90	0.0200	13672	0.03080	0.0466	21.25	0.0099
B TO C	65.0	20.9	28.8	15	120.0	26.69	9	0.12362	1.50	11.91	0.0200	13672	0.03080	0.0466	8.75	0.0041
C TO D	65.0	20.9	28.8	15	120.0	26.69	9	0.12361	1.50	11.91	0.0200	13672	0.03080	0.0466	23.75	0.0111
D TO E	65.0	20.9	28.8	15	120.0	26.67	9	0.12355	1.50	11.91	0.0200	13672	0.03080	0.0466	18.75	0.0087
E TO F	65.0	20.9	28.8	15	120.0	26.67	9	0.12351	1.50	11.92	0.0200	13672	0.03080	0.0466	73.75	0.0344
F TO G	65.0	20.9	28.8	15	120.0	26.63	9	0.12335	1.50	11.93	0.0200	13672	0.03080	0.0467	23.75	0.0111
G TO H	65.0	20.9	28.8	15	120.0	26.62	9	0.12330	1.50	11.94	0.0200	13672	0.03080	0.0467	26.65	0.0124
H TO I			28.0	0		26.61	0	#DIV/0!		#DIV/0!	0.0200	#DIV/0!	#DIV/0!	#DIV/0!	0.00	#DIV/0!
I TO J			28.0	0		#DIV/0!	#DIV/0!	#DIV/0!		#DIV/0!	0.0200	#DIV/0!	#DIV/0!	#DIV/0!	0.00	#DIV/0!
J TO K			28.0	0		#DIV/0!	#DIV/0!	#DIV/0!		#DIV/0!	0.0200	#DIV/0!	#DIV/0!	#DIV/0!	0.00	#DIV/0!
K TO L			28.0	0		#DIV/0!	#DIV/0!	#DIV/0!		#DIV/0!	0.0200	#DIV/0!	#DIV/0!	#DIV/0!	0.00	#DIV/0!
L TO M			28.0	0		#DIV/0!	#DIV/0!	#DIV/0!		#DIV/0!	0.0200	#DIV/0!	#DIV/0!	#DIV/0!	0.00	#DIV/0!
																0.0917

Pressure Drop Calculation - ASW-2

Intelidata

80 Pickett District Road, New Milford, CT

PRESSURE DROP CALCULATION

'E RUN	W LBS/HR	% O2	MW	SCFM (@70 F)	TEMP DEG F	PRES. PSIA	ACFM	DENSITY LBS/FT^3	ID INCHES	/ELOCIT FPS	VISC. CP	Nre	FF	PRES DRO PSI/100FT	EQUIV. LENGTH FEET	PRESS. DROP PSI
A TO B	65.0	20.9	28.8	15	120.0	26.70	9	0.12367	1.50	11.90	0.0200	13672	0.03080	0.0466	31.25	0.0146
B TO C	65.0	20.9	28.8	15	120.0	26.69	9	0.12360	1.50	11.91	0.0200	13672	0.03080	0.0466	15.25	0.0071
C TO D	65.0	20.9	28.8	15	120.0	26.68	9	0.12357	1.50	11.91	0.0200	13672	0.03080	0.0466	63.75	0.0297
D TO E	65.0	20.9	28.8	15	120.0	26.65	9	0.12343	1.50	11.93	0.0200	13672	0.03080	0.0467	26.65	0.0124
E TO F			28.0	0		26.64	0	#DIV/0!		#DIV/0!	0.0200	#DIV/0!	#DIV/0!	#DIV/0!	0.00	#DIV/0!
F TO G			28.0	0		#DIV/0!	#DIV/0!	#DIV/0!		#DIV/0!	0.0200	#DIV/0!	#DIV/0!	#DIV/0!	0.00	#DIV/0!
G TO H			28.0	0		#DIV/0!	#DIV/0!	#DIV/0!		#DIV/0!	0.0200	#DIV/0!	#DIV/0!	#DIV/0!	0.00	#DIV/0!
H TO I			28.0	0		#DIV/0!	#DIV/0!	#DIV/0!		#DIV/0!	0.0200	#DIV/0!	#DIV/0!	#DIV/0!	0.00	#DIV/0!
I TO J			28.0	0		#DIV/0!	#DIV/0!	#DIV/0!		#DIV/0!	0.0200	#DIV/0!	#DIV/0!	#DIV/0!	0.00	#DIV/0!
J TO K			28.0	0		#DIV/0!	#DIV/0!	#DIV/0!		#DIV/0!	0.0200	#DIV/0!	#DIV/0!	#DIV/0!	0.00	#DIV/0!
K TO L			28.0	0		#DIV/0!	#DIV/0!	#DIV/0!		#DIV/0!	0.0200	#DIV/0!	#DIV/0!	#DIV/0!	0.00	#DIV/0!
L TO M			28.0	0		#DIV/0!	#DIV/0!	#DIV/0!		#DIV/0!	0.0200	#DIV/0!	#DIV/0!	#DIV/0!	0.00	#DIV/0!
																0.0638

Pressure Drop Calculation - SVE-1

Henlopen, Watertown, CT

PRESSURE DROP CALCULATION

'E RUN	W LBS/HR	% O2	MW	SCFM (@70 F)	TEMP DEG F	PRES. PSIA	ACFM	DENSITY LBS/FT^3	ID INCHES	/ELOCIT FPS	VISC. CP	Nre	FF	PRES DROI PSI/100FT	EQUIV. LENGTH FEET	PRESS. DROP PSI
A TO B	65.0	20.9	28.8	15	120.0	26.70	9	0.12367	1.50	11.90	0.0200	13672	0.03080	0.0466	17.65	0.0082
B TO C	65.0	20.9	28.8	15	120.0	26.69	9	0.12363	1.50	11.91	0.0200	13672	0.03080	0.0466	23.75	0.0111
C TO D	65.0	20.9	28.8	15	120.0	26.68	9	0.12358	1.50	11.91	0.0200	13672	0.03080	0.0466	61.75	0.0288
D TO E	65.0	20.9	28.8	15	120.0	26.65	9	0.12345	1.50	11.92	0.0200	13672	0.03080	0.0466	20.75	0.0097
E TO F	65.0	20.9	28.8	15	120.0	26.64	9	0.12340	1.50	11.93	0.0200	13672	0.03080	0.0467	22.90	0.0107
F TO G			28.0	0		26.63	0	#DIV/0!		#DIV/0!	0.0200	#DIV/0!	#DIV/0!	#DIV/0!	0.00	#DIV/0!
G TO H			28.0	0		#DIV/0!	#DIV/0!	#DIV/0!		#DIV/0!	0.0200	#DIV/0!	#DIV/0!	#DIV/0!	0.00	#DIV/0!
H TO I			28.0	0		#DIV/0!	#DIV/0!	#DIV/0!		#DIV/0!	0.0200	#DIV/0!	#DIV/0!	#DIV/0!	0.00	#DIV/0!
I TO J			28.0	0		#DIV/0!	#DIV/0!	#DIV/0!		#DIV/0!	0.0200	#DIV/0!	#DIV/0!	#DIV/0!	0.00	#DIV/0!
J TO K			28.0	0		#DIV/0!	#DIV/0!	#DIV/0!		#DIV/0!	0.0200	#DIV/0!	#DIV/0!	#DIV/0!	0.00	#DIV/0!
K TO L			28.0	0		#DIV/0!	#DIV/0!	#DIV/0!		#DIV/0!	0.0200	#DIV/0!	#DIV/0!	#DIV/0!	0.00	#DIV/0!
L TO M			28.0	0		#DIV/0!	#DIV/0!	#DIV/0!		#DIV/0!	0.0200	#DIV/0!	#DIV/0!	#DIV/0!	0.00	#DIV/0!
																0.0684

Pressure Drop Calculation - ASW-4

Intelidata

80 Pickett District Road, New Milford, CT

PRESSURE DROP CALCULATION

'E RUN	W LBS/HR	% O2	MW	SCFM (@70 F)	TEMP DEG F	PRES. PSIA	ACFM	DENSITY LBS/FT^3	ID INCHES	/ELOCIT FPS	VISC. CP	Nre	FF	PRES DROI PSI/100FT	EQUIV. LENGTH FEET	PRESS. DROP PSI
A TO B	65.0	20.9	28.8	15	120.0	26.70	9	0.12367	1.50	11.90	0.0200	13672	0.03080	0.0466	16.25	0.0076
B TO C	65.0	20.9	28.8	15	120.0	26.69	9	0.12364	1.50	11.91	0.0200	13672	0.03080	0.0466	23.75	0.0111
C TO D	65.0	20.9	28.8	15	120.0	26.68	9	0.12358	1.50	11.91	0.0200	13672	0.03080	0.0466	35.75	0.0167
D TO E	65.0	20.9	28.8	15	120.0	26.66	9	0.12351	1.50	11.92	0.0200	13672	0.03080	0.0466	20.75	0.0097
E TO F	65.0	20.9	28.8	15	120.0	26.66	9	0.12346	1.50	11.92	0.0200	13672	0.03080	0.0466	22.90	0.0107
F TO G			28.0	0		26.64	0	#DIV/0!		#DIV/0!	0.0200	#DIV/0!	#DIV/0!	#DIV/0!	0.00	#DIV/0!
G TO H			28.0	0		#DIV/0!	#DIV/0!	#DIV/0!		#DIV/0!	0.0200	#DIV/0!	#DIV/0!	#DIV/0!	0.00	#DIV/0!
H TO I			28.0	0		#DIV/0!	#DIV/0!	#DIV/0!		#DIV/0!	0.0200	#DIV/0!	#DIV/0!	#DIV/0!	0.00	#DIV/0!
I TO J			28.0	0		#DIV/0!	#DIV/0!	#DIV/0!		#DIV/0!	0.0200	#DIV/0!	#DIV/0!	#DIV/0!	0.00	#DIV/0!
J TO K			28.0	0		#DIV/0!	#DIV/0!	#DIV/0!		#DIV/0!	0.0200	#DIV/0!	#DIV/0!	#DIV/0!	0.00	#DIV/0!
K TO L			28.0	0		#DIV/0!	#DIV/0!	#DIV/0!		#DIV/0!	0.0200	#DIV/0!	#DIV/0!	#DIV/0!	0.00	#DIV/0!
L TO M			28.0	0		#DIV/0!	#DIV/0!	#DIV/0!		#DIV/0!	0.0200	#DIV/0!	#DIV/0!	#DIV/0!	0.00	#DIV/0!
																0.0556

Pressure Drop Calculation - ASW-5

Intelidata

80 Pickett District Road, New Milford, CT

PRESSURE DROP CALCULATION

'E RUN	W LBS/HR	% O2	MW	SCFM (@70 F)	TEMP DEG F	PRES. PSIA	ACFM	DENSITY LBS/FT^3	ID INCHES	/ELOCIT' FPS	VISC. CP	Nre	FF	PRES DROI PSI/100FT	EQUIV. LENGTH FEET	PRESS. DROP PSI
A TO B	65.0	20.9	28.8	15	120.0	26.70	9	0.12367	1.50	11.90	0.0200	13672	0.03080	0.0466	16.25	0.0076
B TO C	65.0	20.9	28.8	15	120.0	26.69	9	0.12364	1.50	11.91	0.0200	13672	0.03080	0.0466	23.75	0.0111
C TO D	65.0	20.9	28.8	15	120.0	26.68	9	0.12358	1.50	11.91	0.0200	13672	0.03080	0.0466	23.75	0.0111
D TO E	65.0	20.9	28.8	15	120.0	26.67	9	0.12353	1.50	11.92	0.0200	13672	0.03080	0.0466	11.75	0.0055
E TO F	65.0	20.9	28.8	15	120.0	26.66	9	0.12351	1.50	11.92	0.0200	13672	0.03080	0.0466	22.90	0.0107
F TO G			28.0	0		26.65	0	#DIV/0!		#DIV/0!	0.0200	#DIV/0!	#DIV/0!	#DIV/0!	0.00	#DIV/0!
G TO H			28.0	0		#DIV/0!	#DIV/0!	#DIV/0!		#DIV/0!	0.0200	#DIV/0!	#DIV/0!	#DIV/0!	0.00	#DIV/0!
H TO I			28.0	0		#DIV/0!	#DIV/0!	#DIV/0!		#DIV/0!	0.0200	#DIV/0!	#DIV/0!	#DIV/0!	0.00	#DIV/0!
I TO J			28.0	0		#DIV/0!	#DIV/0!	#DIV/0!		#DIV/0!	0.0200	#DIV/0!	#DIV/0!	#DIV/0!	0.00	#DIV/0!
J TO K			28.0	0		#DIV/0!	#DIV/0!	#DIV/0!		#DIV/0!	0.0200	#DIV/0!	#DIV/0!	#DIV/0!	0.00	#DIV/0!
K TO L			28.0	0		#DIV/0!	#DIV/0!	#DIV/0!		#DIV/0!	0.0200	#DIV/0!	#DIV/0!	#DIV/0!	0.00	#DIV/0!
L TO M			28.0	0		#DIV/0!	#DIV/0!	#DIV/0!		#DIV/0!	0.0200	#DIV/0!	#DIV/0!	#DIV/0!	0.00	#DIV/0!
																0.0458

Pressure Drop Calculation - ASW-6

Intelidata

80 Pickett District Road, New Milford, CT

PRESSURE DROP CALCULATION

'E RUN	W LBS/HR	% O2	MW	SCFM (@70 F)	TEMP DEG F	PRES. PSIA	ACFM	DENSITY LBS/FT^3	ID INCHES	/ELOCIT' FPS	VISC. CP	Nre	FF	PRES DROI PSI/100FT	EQUIV. LENGTH FEET	PRESS. DROP PSI
A TO B	65.0	20.9	28.8	15	120.0	26.70	9	0.12367	1.50	11.90	0.0200	13672	0.03080	0.0466	46.00	0.0214
B TO C	65.0	20.9	28.8	15	120.0	26.68	9	0.12357	1.50	11.91	0.0200	13672	0.03080	0.0466	23.75	0.0111
C TO D	65.0	20.9	28.8	15	120.0	26.67	9	0.12352	1.50	11.92	0.0200	13672	0.03080	0.0466	15.75	0.0073
D TO E	65.0	20.9	28.8	15	120.0	26.66	9	0.12349	1.50	11.92	0.0200	13672	0.03080	0.0466	22.90	0.0107
E TO F			28.0	0		26.65	0	#DIV/0!		#DIV/0!	0.0200	#DIV/0!	#DIV/0!	#DIV/0!	0.00	#DIV/0!
F TO G			28.0	0		#DIV/0!	#DIV/0!	#DIV/0!		#DIV/0!	0.0200	#DIV/0!	#DIV/0!	#DIV/0!	0.00	#DIV/0!
G TO H			28.0	0		#DIV/0!	#DIV/0!	#DIV/0!		#DIV/0!	0.0200	#DIV/0!	#DIV/0!	#DIV/0!	0.00	#DIV/0!
H TO I			28.0	0		#DIV/0!	#DIV/0!	#DIV/0!		#DIV/0!	0.0200	#DIV/0!	#DIV/0!	#DIV/0!	0.00	#DIV/0!
I TO J			28.0	0		#DIV/0!	#DIV/0!	#DIV/0!		#DIV/0!	0.0200	#DIV/0!	#DIV/0!	#DIV/0!	0.00	#DIV/0!
J TO K			28.0	0		#DIV/0!	#DIV/0!	#DIV/0!		#DIV/0!	0.0200	#DIV/0!	#DIV/0!	#DIV/0!	0.00	#DIV/0!
K TO L			28.0	0		#DIV/0!	#DIV/0!	#DIV/0!		#DIV/0!	0.0200	#DIV/0!	#DIV/0!	#DIV/0!	0.00	#DIV/0!
L TO M			28.0	0		#DIV/0!	#DIV/0!	#DIV/0!		#DIV/0!	0.0200	#DIV/0!	#DIV/0!	#DIV/0!	0.00	#DIV/0!
																0.0505

Pressure Drop Calculation - ASW-7

Intelidata

80 Pickett District Roads, New Milford, CT

PRESSURE DROP CALCULATION

'E RUN	W LBS/HR	% O2	MW	SCFM (@70 F)	TEMP DEG F	PRES. PSIA	ACFM	DENSITY LBS/FT^3	ID INCHES	/ELOCITY FPS	VISC. CP	Nre	FF	PRES DROP PSI/100FT	EQUIV. LENGTH FEET	PRESS. DROP PSI
A TO B	65.0	20.9	28.8	15	120.0	26.70	9	0.12367	1.50	11.90	0.0200	13672	0.03080	0.0466	18.25	0.0085
B TO C	65.0	20.9	28.8	15	120.0	26.69	9	0.12363	1.50	11.91	0.0200	13672	0.03080	0.0466	23.75	0.0111
C TO D	65.0	20.9	28.8	15	120.0	26.68	9	0.12358	1.50	11.91	0.0200	13672	0.03080	0.0466	93.75	0.0437
D TO E	65.0	20.9	28.8	15	120.0	26.64	9	0.12338	1.50	11.93	0.0200	13672	0.03080	0.0467	22.90	0.0107
E TO F	65.0	20.9	28.8	15	120.0	26.63	9	0.12333		#DIV/0!	0.0200	#DIV/0!	#DIV/0!	#DIV/0!	0.00	#DIV/0!
F TO G			28.0	0		#DIV/0!	#DIV/0!	#DIV/0!		#DIV/0!	0.0200	#DIV/0!	#DIV/0!	#DIV/0!	0.00	#DIV/0!
G TO H			28.0	0		#DIV/0!	#DIV/0!	#DIV/0!		#DIV/0!	0.0200	#DIV/0!	#DIV/0!	#DIV/0!	0.00	#DIV/0!
H TO I			28.0	0		#DIV/0!	#DIV/0!	#DIV/0!		#DIV/0!	0.0200	#DIV/0!	#DIV/0!	#DIV/0!	0.00	#DIV/0!
I TO J			28.0	0		#DIV/0!	#DIV/0!	#DIV/0!		#DIV/0!	0.0200	#DIV/0!	#DIV/0!	#DIV/0!	0.00	#DIV/0!
J TO K			28.0	0		#DIV/0!	#DIV/0!	#DIV/0!		#DIV/0!	0.0200	#DIV/0!	#DIV/0!	#DIV/0!	0.00	#DIV/0!
K TO L			28.0	0		#DIV/0!	#DIV/0!	#DIV/0!		#DIV/0!	0.0200	#DIV/0!	#DIV/0!	#DIV/0!	0.00	#DIV/0!
L TO M			28.0	0		#DIV/0!	#DIV/0!	#DIV/0!		#DIV/0!	0.0200	#DIV/0!	#DIV/0!	#DIV/0!	0.00	#DIV/0!
																0.0739

Pressure Drop Calculation - ASW-8

Intelidata

80 Pickett District Road, New Milford, CT

PRESSURE DROP CALCULATION

'E RUN	W LBS/HR	% O2	MW	SCFM (@70 F)	TEMP DEG F	PRES. PSIA	ACFM	DENSITY LBS/FT³	ID INCHES	/ELOCIT FPS	VISC. CP	Nre	FF	PRES DROI PSI/100FT	EQUIV. LENGTH FEET	PRESS. DROP PSI
A TO B	65.0	20.9	28.8	15	120.0	26.70	9	0.12367	1.50	11.90	0.0200	13672	0.03080	0.0466	24.25	0.0113
B TO C	65.0	20.9	28.8	15	120.0	26.69	9	0.12362	1.50	11.91	0.0200	13672	0.03080	0.0466	23.75	0.0111
C TO D	65.0	20.9	28.8	15	120.0	26.68	9	0.12357	1.50	11.91	0.0200	13672	0.03080	0.0466	44.75	0.0209
D TO E	65.0	20.9	28.8	15	120.0	26.66	9	0.12347	1.50	11.92	0.0200	13672	0.03080	0.0466	89.75	0.0419
E TO F	65.0	20.9	28.8	15	120.0	26.61	9	0.12328	1.50	11.94	0.0200	13672	0.03080	0.0467	22.90	0.0107
F TO G			28.0	0		26.60	0	#DIV/0!		#DIV/0!	0.0200	#DIV/0!	#DIV/0!	#DIV/0!	0.00	#DIV/0!
G TO H			28.0	0		#DIV/0!	#DIV/0!	#DIV/0!		#DIV/0!	0.0200	#DIV/0!	#DIV/0!	#DIV/0!	0.00	#DIV/0!
H TO I			28.0	0		#DIV/0!	#DIV/0!	#DIV/0!		#DIV/0!	0.0200	#DIV/0!	#DIV/0!	#DIV/0!	0.00	#DIV/0!
I TO J			28.0	0		#DIV/0!	#DIV/0!	#DIV/0!		#DIV/0!	0.0200	#DIV/0!	#DIV/0!	#DIV/0!	0.00	#DIV/0!
J TO K			28.0	0		#DIV/0!	#DIV/0!	#DIV/0!		#DIV/0!	0.0200	#DIV/0!	#DIV/0!	#DIV/0!	0.00	#DIV/0!
K TO L			28.0	0		#DIV/0!	#DIV/0!	#DIV/0!		#DIV/0!	0.0200	#DIV/0!	#DIV/0!	#DIV/0!	0.00	#DIV/0!
L TO M			28.0	0		#DIV/0!	#DIV/0!	#DIV/0!		#DIV/0!	0.0200	#DIV/0!	#DIV/0!	#DIV/0!	0.00	#DIV/0!
																0.0958

Pressure Drop Calculation - ASW-9

Intelidata

80 Pickett District Road, New Milford, CT

PRESSURE DROP CALCULATION

'E RUN	W LBS/HR	% O2	MW	SCFM (@70 F)	TEMP DEG F	PRES. PSIA	ACFM	DENSITY LBS/FT^3	ID INCHES	/ELOCIT FPS	VISC. CP	Nre	FF	PRES DRO PSI/100FT	EQUIV. LENGTH FEET	PRESS. DROP PSI
A TO B	65.0	20.9	28.8	15	120.0	26.70	9	0.12367	1.50	11.90	0.0200	13672	0.03080	0.0466	34.25	0.0159
B TO C	65.0	20.9	28.8	15	120.0	26.68	9	0.12360	1.50	11.91	0.0200	13672	0.03080	0.0466	23.75	0.0111
C TO D	65.0	20.9	28.8	15	120.0	26.67	9	0.12355	1.50	11.92	0.0200	13672	0.03080	0.0466	89.75	0.0418
D TO E	65.0	20.9	28.8	15	120.0	26.63	9	0.12335	1.50	11.93	0.0200	13672	0.03080	0.0467	22.90	0.0107
E TO F		20.9	28.8	0	120.0	26.62	0	#DIV/0!		#DIV/0!	0.0200	#DIV/0!	#DIV/0!	#DIV/0!	0.00	#DIV/0!
F TO G			28.0	0		#DIV/0!	#DIV/0!	#DIV/0!		#DIV/0!	0.0200	#DIV/0!	#DIV/0!	#DIV/0!	0.00	#DIV/0!
G TO H			28.0	0		#DIV/0!	#DIV/0!	#DIV/0!		#DIV/0!	0.0200	#DIV/0!	#DIV/0!	#DIV/0!	0.00	#DIV/0!
H TO I			28.0	0		#DIV/0!	#DIV/0!	#DIV/0!		#DIV/0!	0.0200	#DIV/0!	#DIV/0!	#DIV/0!	0.00	#DIV/0!
I TO J			28.0	0		#DIV/0!	#DIV/0!	#DIV/0!		#DIV/0!	0.0200	#DIV/0!	#DIV/0!	#DIV/0!	0.00	#DIV/0!
J TO K			28.0	0		#DIV/0!	#DIV/0!	#DIV/0!		#DIV/0!	0.0200	#DIV/0!	#DIV/0!	#DIV/0!	0.00	#DIV/0!
K TO L			28.0	0		#DIV/0!	#DIV/0!	#DIV/0!		#DIV/0!	0.0200	#DIV/0!	#DIV/0!	#DIV/0!	0.00	#DIV/0!
L TO M			28.0	0		#DIV/0!	#DIV/0!	#DIV/0!		#DIV/0!	0.0200	#DIV/0!	#DIV/0!	#DIV/0!	0.00	#DIV/0!
																0.0795

Pressure Drop Calculation - ASW-10

Intelidata

80 Pickett District Road, New Milford, CT

PRESSURE DROP CALCULATION

'E RUN	W LBS/HR	% O2	MW	SCFM (@70 F)	TEMP DEG F	PRES. PSIA	ACFM	DENSITY LBS/FT^3	ID INCHES	'ELOCIT' FPS	VISC. CP	Nre	FF	PRES DROI PSI/100FT	EQUIV. LENGTH FEET	PRESS. DROP PSI
A TO B	65.0	20.9	28.8	15	120.0	26.70	9	0.12367	1.50	11.90	0.0200	13672	0.03080	0.0466	21.75	0.0101
B TO C	65.0	20.9	28.8	15	120.0	26.69	9	0.12362	1.50	11.91	0.0200	13672	0.03080	0.0466	23.75	0.0111
C TO D	65.0	20.9	28.8	15	120.0	26.68	9	0.12357	1.50	11.91	0.0200	13672	0.03080	0.0466	86.75	0.0404
D TO E	65.0	20.9	28.8	15	120.0	26.64	9	0.12339	1.50	11.93	0.0200	13672	0.03080	0.0467	16.75	0.0078
E TO F	65.0	20.9	28.8	15	120.0	26.63	9	0.12335	1.50	11.93	0.0200	13672	0.03080	0.0467	22.90	0.0107
F TO G			28.0	0		26.62	0	#DIV/0!		#DIV/0!	0.0200	#DIV/0!	#DIV/0!	#DIV/0!	0.00	#DIV/0!
G TO H			28.0	0		#DIV/0!	#DIV/0!	#DIV/0!		#DIV/0!	0.0200	#DIV/0!	#DIV/0!	#DIV/0!	0.00	#DIV/0!
H TO I			28.0	0		#DIV/0!	#DIV/0!	#DIV/0!		#DIV/0!	0.0200	#DIV/0!	#DIV/0!	#DIV/0!	0.00	#DIV/0!
I TO J			28.0	0		#DIV/0!	#DIV/0!	#DIV/0!		#DIV/0!	0.0200	#DIV/0!	#DIV/0!	#DIV/0!	0.00	#DIV/0!
J TO K			28.0	0		#DIV/0!	#DIV/0!	#DIV/0!		#DIV/0!	0.0200	#DIV/0!	#DIV/0!	#DIV/0!	0.00	#DIV/0!
K TO L			28.0	0		#DIV/0!	#DIV/0!	#DIV/0!		#DIV/0!	0.0200	#DIV/0!	#DIV/0!	#DIV/0!	0.00	#DIV/0!
L TO M			28.0	0		#DIV/0!	#DIV/0!	#DIV/0!		#DIV/0!	0.0200	#DIV/0!	#DIV/0!	#DIV/0!	0.00	#DIV/0!
																0.0801

Pressure Drop Calculation - ASW-11

Intelidata

80 Pickett District Road, New Milford, CT

PRESSURE DROP CALCULATION

'E RUN	W LBS/HR	% O2	MW	SCFM (@70 F)	TEMP DEG F	PRES. PSIA	ACFM	DENSITY LBS/FT^3	ID INCHES	/ELOCIT FPS	VISC. CP	Nre	FF	PRES DROI PSI/100FT	EQUIV. LENGTH FEET	PRESS. DROP PSI
A TO B	65.0	20.9	28.8	15	120.0	26.70	9	0.12367	1.50	11.90	0.0200	13672	0.03080	0.0466	26.65	0.0124
B TO C	65.0	20.9	28.8	15	120.0	26.69	9	0.12361	1.50	11.91	0.0200	13672	0.03080	0.0466	38.75	0.0181
C TO D	65.0	20.9	28.8	15	120.0	26.67	9	0.12353	1.50	11.92	0.0200	13672	0.03080	0.0466	78.75	0.0367
D TO E	65.0	20.9	28.8	15	120.0	26.63	9	0.12336	1.50	11.93	0.0200	13672	0.03080	0.0467	8.75	0.0041
E TO F	65.0	20.9	28.8	15	120.0	26.63	9	0.12334	1.50	11.93	0.0200	13672	0.03080	0.0467	8.75	0.0041
F TO G	65.0	20.9	28.8	15	120.0	26.62	9	0.12332	1.50	11.94	0.0200	13672	0.03080	0.0467	11.75	0.0055
G TO H	65.0	20.9	28.8	15	120.0	26.62	9	0.12330	1.50	11.94	0.0200	13672	0.03080	0.0467	18.75	0.0088
H TO I	65.0	20.9	28.8	15	120.0	26.61	9	0.12326	1.50	11.94	0.0200	13672	0.03080	0.0467	16.25	0.0076
I TO J			28.0	0		26.60	0	#DIV/0!		#DIV/0!	0.0200	#DIV/0!	#DIV/0!	#DIV/0!	0.00	#DIV/0!
J TO K			28.0	0		#DIV/0!	#DIV/0!	#DIV/0!		#DIV/0!	0.0200	#DIV/0!	#DIV/0!	#DIV/0!	0.00	#DIV/0!
K TO L			28.0	0		#DIV/0!	#DIV/0!	#DIV/0!		#DIV/0!	0.0200	#DIV/0!	#DIV/0!	#DIV/0!	0.00	#DIV/0!
L TO M			28.0	0		#DIV/0!	#DIV/0!	#DIV/0!		#DIV/0!	0.0200	#DIV/0!	#DIV/0!	#DIV/0!	0.00	#DIV/0!
																0.0972

Pressure Drop Calculation - ASW-12

Intelidata

80 Pickett District Road, New Milford, CT

PRESSURE DROP CALCULATION

'E RUN	W LBS/HR	% O2	MW	SCFM (@70 F)	TEMP DEG F	PRES. PSIA	ACFM	DENSITY LBS/FT^3	ID INCHES	/ELOCIT FPS	VISC. CP	Nre	FF	PRES DROI PSI/100FT	EQUIV. LENGTH FEET	PRESS. DROP PSI
A TO B	65.0	20.9	28.8	15	120.0	26.70	9	0.12367	1.50	11.90	0.0200	13672	0.03080	0.0466	26.65	0.0124
B TO C	65.0	20.9	28.8	15	120.0	26.69	9	0.12361	1.50	11.91	0.0200	13672	0.03080	0.0466	38.75	0.0181
C TO D	65.0	20.9	28.8	15	120.0	26.67	9	0.12353	1.50	11.92	0.0200	13672	0.03080	0.0466	78.75	0.0367
D TO E	65.0	20.9	28.8	15	120.0	26.63	9	0.12336	1.50	11.93	0.0200	13672	0.03080	0.0467	8.75	0.0041
E TO F	65.0	20.9	28.8	15	120.0	26.63	9	0.12334	1.50	11.93	0.0200	13672	0.03080	0.0467	8.75	0.0041
F TO G	65.0	20.9	28.8	15	120.0	26.62	9	0.12332	1.50	11.94	0.0200	13672	0.03080	0.0467	11.75	0.0055
G TO H	65.0	20.9	28.8	15	120.0	26.62	9	0.12330	1.50	11.94	0.0200	13672	0.03080	0.0467	41.75	0.0195
H TO I	65.0	20.9	28.8	15	120.0	26.60	9	0.12321	1.50	11.95	0.0200	13672	0.03080	0.0467	16.25	0.0076
I TO J			28.0	0		26.59	0	#DIV/0!		#DIV/0!	0.0200	#DIV/0!	#DIV/0!	#DIV/0!	0.00	#DIV/0!
J TO K			28.0	0		#DIV/0!	#DIV/0!	#DIV/0!		#DIV/0!	0.0200	#DIV/0!	#DIV/0!	#DIV/0!	0.00	#DIV/0!
K TO L			28.0	0		#DIV/0!	#DIV/0!	#DIV/0!		#DIV/0!	0.0200	#DIV/0!	#DIV/0!	#DIV/0!	0.00	#DIV/0!
L TO M			28.0	0		#DIV/0!	#DIV/0!	#DIV/0!		#DIV/0!	0.0200	#DIV/0!	#DIV/0!	#DIV/0!	0.00	#DIV/0!
																0.1079

Pressure Drop Calculation - ASW-13

Intelidata

80 Pickett District Road, New Milford, CT

PRESSURE DROP CALCULATION

'E RUN	W LBS/HR	% O2	MW	SCFM (@70 F)	TEMP DEG F	PRES. PSIA	ACFM	DENSITY LBS/FT^3	ID INCHES	/ELOCIT FPS	VISC. CP	Nre	FF	PRES DROI PSI/100FT	EQUIV. LENGTH FEET	PRESS. DROP PSI
A TO B	65.0	20.9	28.8	15	120.0	26.70	9	0.12367	1.50	11.90	0.0200	13672	0.03080	0.0466	26.65	0.0124
B TO C	65.0	20.9	28.8	15	120.0	26.69	9	0.12361	1.50	11.91	0.0200	13672	0.03080	0.0466	38.75	0.0181
C TO D	65.0	20.9	28.8	15	120.0	26.67	9	0.12353	1.50	11.92	0.0200	13672	0.03080	0.0466	78.75	0.0367
D TO E	65.0	20.9	28.8	15	120.0	26.63	9	0.12336	1.50	11.93	0.0200	13672	0.03080	0.0467	8.75	0.0041
E TO F	65.0	20.9	28.8	15	120.0	26.63	9	0.12334	1.50	11.93	0.0200	13672	0.03080	0.0467	8.75	0.0041
F TO G	65.0	20.9	28.8	15	120.0	26.62	9	0.12332	1.50	11.94	0.0200	13672	0.03080	0.0467	11.75	0.0055
G TO H	65.0	20.9	28.8	15	120.0	26.62	9	0.12330	1.50	11.94	0.0200	13672	0.03080	0.0467	88.75	0.0414
H TO I	65.0	20.9	28.8	15	120.0	26.58	9	0.12310	1.50	11.96	0.0200	13672	0.03080	0.0468	16.25	0.0076
I TO J			28.0	0		26.57	0	#DIV/0!		#DIV/0!	0.0200	#DIV/0!	#DIV/0!	#DIV/0!	0.00	#DIV/0!
J TO K			28.0	0		#DIV/0!	#DIV/0!	#DIV/0!		#DIV/0!	0.0200	#DIV/0!	#DIV/0!	#DIV/0!	0.00	#DIV/0!
K TO L			28.0	0		#DIV/0!	#DIV/0!	#DIV/0!		#DIV/0!	0.0200	#DIV/0!	#DIV/0!	#DIV/0!	0.00	#DIV/0!
L TO M			28.0	0		#DIV/0!	#DIV/0!	#DIV/0!		#DIV/0!	0.0200	#DIV/0!	#DIV/0!	#DIV/0!	0.00	#DIV/0!
																0.1299

Pressure Drop Calculation - ASW-14

Intelidata

80 Pickett District Road, New Milford, CT

PRESSURE DROP CALCULATION

'E RUN	W LBS/HR	% O2	MW	SCFM (@70 F)	TEMP DEG F	PRES. PSIA	ACFM	DENSITY LBS/FT^3	ID INCHES	/ELOCIT FPS	VISC. CP	Nre	FF	PRES DROI PSI/100FT	EQUIV. LENGTH FEET	PRESS. DROP PSI
A TO B	65.0	20.9	28.8	15	120.0	26.70	9	0.12367	1.50	11.90	0.0200	13672	0.03080	0.0466	26.65	0.0124
B TO C	65.0	20.9	28.8	15	120.0	26.69	9	0.12361	1.50	11.91	0.0200	13672	0.03080	0.0466	38.75	0.0181
C TO D	65.0	20.9	28.8	15	120.0	26.67	9	0.12353	1.50	11.92	0.0200	13672	0.03080	0.0466	78.75	0.0367
D TO E	65.0	20.9	28.8	15	120.0	26.63	9	0.12336	1.50	11.93	0.0200	13672	0.03080	0.0467	8.75	0.0041
E TO F	65.0	20.9	28.8	15	120.0	26.63	9	0.12334	1.50	11.93	0.0200	13672	0.03080	0.0467	8.75	0.0041
F TO G	65.0	20.9	28.8	15	120.0	26.62	9	0.12332	1.50	11.94	0.0200	13672	0.03080	0.0467	11.75	0.0055
G TO H	65.0	20.9	28.8	15	120.0	26.62	9	0.12330	1.50	11.94	0.0200	13672	0.03080	0.0467	139.75	0.0653
H TO I	65.0	20.9	28.8	15	120.0	26.55	9	0.12299	1.50	11.97	0.0200	13672	0.03080	0.0468	16.25	0.0076
I TO J			28.0	0		26.55	0	#DIV/0!		#DIV/0!	0.0200	#DIV/0!	#DIV/0!	#DIV/0!	0.00	#DIV/0!
J TO K			28.0	0		#DIV/0!	#DIV/0!	#DIV/0!		#DIV/0!	0.0200	#DIV/0!	#DIV/0!	#DIV/0!	0.00	#DIV/0!
K TO L			28.0	0		#DIV/0!	#DIV/0!	#DIV/0!		#DIV/0!	0.0200	#DIV/0!	#DIV/0!	#DIV/0!	0.00	#DIV/0!
L TO M			28.0	0		#DIV/0!	#DIV/0!	#DIV/0!		#DIV/0!	0.0200	#DIV/0!	#DIV/0!	#DIV/0!	0.00	#DIV/0!
																0.1537

Pressure Drop Calculation - ASW-15

Intelidata

80 Pickett District Road, New Milford, CT

PRESSURE DROP CALCULATION

'E RUN	W LBS/HR	% O2	MW	SCFM (@70 F)	TEMP DEG F	PRES. PSIA	ACFM	DENSITY LBS/FT^3	ID INCHES	/ELOCIT' FPS	VISC. CP	Nre	FF	PRES DRO PSI/100FT	EQUIV. LENGTH FEET	PRESS. DROP PSI
A TO B	65.0	20.9	28.8	15	120.0	26.70	9	0.12367	1.50	11.90	0.0200	13672	0.03080	0.0466	26.65	0.0124
B TO C	65.0	20.9	28.8	15	120.0	26.69	9	0.12361	1.50	11.91	0.0200	13672	0.03080	0.0466	38.75	0.0181
C TO D	65.0	20.9	28.8	15	120.0	26.67	9	0.12353	1.50	11.92	0.0200	13672	0.03080	0.0466	78.75	0.0367
D TO E	65.0	20.9	28.8	15	120.0	26.63	9	0.12336	1.50	11.93	0.0200	13672	0.03080	0.0467	8.75	0.0041
E TO F	65.0	20.9	28.8	15	120.0	26.63	9	0.12334	1.50	11.93	0.0200	13672	0.03080	0.0467	8.75	0.0041
F TO G	65.0	20.9	28.8	15	120.0	26.62	9	0.12332	1.50	11.94	0.0200	13672	0.03080	0.0467	11.75	0.0055
G TO H	65.0	20.9	28.8	15	120.0	26.62	9	0.12330	1.50	11.94	0.0200	13672	0.03080	0.0467	181.75	0.0849
H TO I	65.0	20.9	28.8	15	120.0	26.53	9	0.12290	1.50	11.98	0.0200	13672	0.03080	0.0469	16.25	0.0076
I TO J			28.0	0		26.53	0	#DIV/0!		#DIV/0!	0.0200	#DIV/0!	#DIV/0!	#DIV/0!	0.00	#DIV/0!
J TO K			28.0	0		#DIV/0!	#DIV/0!	#DIV/0!		#DIV/0!	0.0200	#DIV/0!	#DIV/0!	#DIV/0!	0.00	#DIV/0!
K TO L			28.0	0		#DIV/0!	#DIV/0!	#DIV/0!		#DIV/0!	0.0200	#DIV/0!	#DIV/0!	#DIV/0!	0.00	#DIV/0!
L TO M			28.0	0		#DIV/0!	#DIV/0!	#DIV/0!		#DIV/0!	0.0200	#DIV/0!	#DIV/0!	#DIV/0!	0.00	#DIV/0!
																0.1733

Pressure Drop Calculation - ASW-16

Intelidata

80 Pickett District Road, New Milford, CT

PRESSURE DROP CALCULATION

'E RUN	W LBS/HR	% O2	MW	SCFM (@70 F)	TEMP DEG F	PRES. PSIA	ACFM	DENSITY LBS/FT^3	ID INCHES	/ELOCIT' FPS	VISC. CP	Nre	FF	PRES DROI PSI/100FT	EQUIV. LENGTH FEET	PRESS. DROP PSI
A TO B	65.0	20.9	28.8	15	120.0	26.70	9	0.12367	1.50	11.90	0.0200	13672	0.03080	0.0466	26.65	0.0124
B TO C	65.0	20.9	28.8	15	120.0	26.69	9	0.12361	1.50	11.91	0.0200	13672	0.03080	0.0466	38.75	0.0181
C TO D	65.0	20.9	28.8	15	120.0	26.67	9	0.12353	1.50	11.92	0.0200	13672	0.03080	0.0466	78.75	0.0367
D TO E	65.0	20.9	28.8	15	120.0	26.63	9	0.12336	1.50	11.93	0.0200	13672	0.03080	0.0467	8.75	0.0041
E TO F	65.0	20.9	28.8	15	120.0	26.63	9	0.12334	1.50	11.93	0.0200	13672	0.03080	0.0467	8.75	0.0041
F TO G	65.0	20.9	28.8	15	120.0	26.62	9	0.12332	1.50	11.94	0.0200	13672	0.03080	0.0467	11.75	0.0055
G TO H	65.0	20.9	28.8	15	120.0	26.62	9	0.12330	1.50	11.94	0.0200	13672	0.03080	0.0467	181.75	0.0849
H TO I	65.0	20.9	28.8	15	120.0	26.53	9	0.12290	1.50	11.98	0.0200	13672	0.03080	0.0469	27.75	0.0130
I TO J	65.0	20.9	28.8	15	120.0	26.52	9	0.12284	1.50	11.98	0.0200	13672	0.03080	0.0469	16.25	0.0076
J TO K			28.0	0		26.51	0	#DIV/0!		#DIV/0!	0.0200	#DIV/0!	#DIV/0!	#DIV/0!	0.00	#DIV/0!
K TO L			28.0	0		#DIV/0!	#DIV/0!	#DIV/0!		#DIV/0!	0.0200	#DIV/0!	#DIV/0!	#DIV/0!	0.00	#DIV/0!
L TO M			28.0	0		#DIV/0!	#DIV/0!	#DIV/0!		#DIV/0!	0.0200	#DIV/0!	#DIV/0!	#DIV/0!	0.00	#DIV/0!
																0.1863

Pressure Drop Calculation - ASW-17

Intelidata

80 Pickett District Road, New Milford, CT

PRESSURE DROP CALCULATION

'E RUN	W LBS/HR	% O2	MW	SCFM (@70 F)	TEMP DEG F	PRES. PSIA	ACFM	DENSITY LBS/FT^3	ID INCHES	/ELOCIT FPS	VISC. CP	Nre	FF	PRES DRO PSI/100FT	EQUIV. LENGTH FEET	PRESS. DROP PSI
A TO B	65.0	20.9	28.8	15	120.0	26.70	9	0.12367	1.50	11.90	0.0200	13672	0.03080	0.0466	26.65	0.0124
B TO C	65.0	20.9	28.8	15	120.0	26.69	9	0.12361	1.50	11.91	0.0200	13672	0.03080	0.0466	38.75	0.0181
C TO D	65.0	20.9	28.8	15	120.0	26.67	9	0.12353	1.50	11.92	0.0200	13672	0.03080	0.0466	78.75	0.0367
D TO E	65.0	20.9	28.8	15	120.0	26.63	9	0.12336	1.50	11.93	0.0200	13672	0.03080	0.0467	8.75	0.0041
E TO F	65.0	20.9	28.8	15	120.0	26.63	9	0.12334	1.50	11.93	0.0200	13672	0.03080	0.0467	8.75	0.0041
F TO G	65.0	20.9	28.8	15	120.0	26.62	9	0.12332	1.50	11.94	0.0200	13672	0.03080	0.0467	11.75	0.0055
G TO H	65.0	20.9	28.8	15	120.0	26.62	9	0.12330	1.50	11.94	0.0200	13672	0.03080	0.0467	181.75	0.0849
H TO I	65.0	20.9	28.8	15	120.0	26.53	9	0.12290	1.50	11.98	0.0200	13672	0.03080	0.0469	51.75	0.0242
I TO J	65.0	20.9	28.8	15	120.0	26.51	9	0.12279	1.50	11.99	0.0200	13672	0.03080	0.0469	16.25	0.0076
J TO K			28.0	0		26.50	0	#DIV/0!		#DIV/0!	0.0200	#DIV/0!	#DIV/0!	#DIV/0!	0.00	#DIV/0!
K TO L			28.0	0		#DIV/0!	#DIV/0!	#DIV/0!		#DIV/0!	0.0200	#DIV/0!	#DIV/0!	#DIV/0!	0.00	#DIV/0!
L TO M			28.0	0		#DIV/0!	#DIV/0!	#DIV/0!		#DIV/0!	0.0200	#DIV/0!	#DIV/0!	#DIV/0!	0.00	#DIV/0!
																0.1976

Pressure Drop Calculation - SVE-1

Intelidata

80 Pickett District Road, New Milford, CT

PRESSURE DROP CALCULATION

'E RUN	W LBS/HR	% O2	MW	SCFM (@70 F)	TEMP DEG F	PRES. PSIA	ACFM	DENSITY LBS/FT^3	ID INCHES	/ELOCIT FPS	VISC. CP	Nre	FF	PRES DROI PSI/100FT	EQUIV. LENGTH FEET	PRESS. DROP PSI
A TO B	357.0	20.9	28.8	80	60.0	13.70	84	0.07078	3.00	28.56	0.0200	37545	0.02411	0.0600	53.30	0.0320
B TO C	357.0	20.9	28.8	80	60.0	13.67	84	0.07061	3.00	28.62	0.0200	37545	0.02411	0.0602	57.50	0.0346
C TO D	357.0	20.9	28.8	80	60.0	13.63	84	0.07043	3.00	28.70	0.0200	37545	0.02411	0.0603	79.50	0.0479
D TO E	357.0	20.9	28.8	80	60.0	13.59	85	0.07019	3.00	28.80	0.0200	37545	0.02411	0.0605	95.50	0.0578
E TO F	357.0	20.9	28.8	80	60.0	13.53	85	0.06989	3.00	28.92	0.0200	37545	0.02411	0.0608	27.50	0.0167
F TO G	357.0	20.9	28.8	80	60.0	13.51	85	0.06980	3.00	28.96	0.0200	37545	0.02411	0.0609	20.00	0.0122
G TO H			28.0	0		13.50	0	#DIV/0!		#DIV/0!	0.0200	#DIV/0!	#DIV/0!	#DIV/0!	0.00	#DIV/0!
H TO I			28.0	0		#DIV/0!	#DIV/0!	#DIV/0!		#DIV/0!	0.0200	#DIV/0!	#DIV/0!	#DIV/0!	0.00	#DIV/0!
I TO J			28.0	0		#DIV/0!	#DIV/0!	#DIV/0!		#DIV/0!	0.0200	#DIV/0!	#DIV/0!	#DIV/0!	0.00	#DIV/0!
J TO K			28.0	0		#DIV/0!	#DIV/0!	#DIV/0!		#DIV/0!	0.0200	#DIV/0!	#DIV/0!	#DIV/0!	0.00	#DIV/0!
K TO L			28.0	0		#DIV/0!	#DIV/0!	#DIV/0!		#DIV/0!	0.0200	#DIV/0!	#DIV/0!	#DIV/0!	0.00	#DIV/0!
L TO M			28.0	0		#DIV/0!	#DIV/0!	#DIV/0!		#DIV/0!	0.0200	#DIV/0!	#DIV/0!	#DIV/0!	0.00	#DIV/0!
																0.2012

Pressure Drop Calculation - SVE-2

Intelidata

80 Pickett District Road, New Milford, CT

PRESSURE DROP CALCULATION

'E RUN	W LBS/HR	% O2	MW	SCFM (@70 F)	TEMP DEG F	PRES. PSIA	ACFM	DENSITY LBS/FT^3	ID INCHES	'ELOCIT FPS	VISC. CP	Nre	FF	PRES DROI PSI/100FT	EQUIV. LENGTH FEET	PRESS. DROP PSI
A TO B	357.0	20.9	28.8	80	60.0	13.70	84	0.07078	3.00	28.56	0.0200	37545	0.02411	0.0600	53.30	0.0320
B TO C	357.0	20.9	28.8	80	60.0	13.67	84	0.07061	3.00	28.62	0.0200	37545	0.02411	0.0602	57.50	0.0346
C TO D	357.0	20.9	28.8	80	60.0	13.63	84	0.07043	3.00	28.70	0.0200	37545	0.02411	0.0603	79.50	0.0479
D TO E	357.0	20.9	28.8	80	60.0	13.59	85	0.07019	3.00	28.80	0.0200	37545	0.02411	0.0605	95.50	0.0578
E TO F	357.0	20.9	28.8	80	60.0	13.53	85	0.06989	3.00	28.92	0.0200	37545	0.02411	0.0608	27.50	0.0167
F TO G	357.0	20.9	28.8	80	60.0	13.51	85	0.06980	3.00	28.96	0.0200	37545	0.02411	0.0609	68.00	0.0414
G TO H			28.0	0		13.47	0	#DIV/0!		#DIV/0!	0.0200	#DIV/0!	#DIV/0!	#DIV/0!	0.00	#DIV/0!
H TO I			28.0	0		#DIV/0!	#DIV/0!	#DIV/0!		#DIV/0!	0.0200	#DIV/0!	#DIV/0!	#DIV/0!	0.00	#DIV/0!
I TO J			28.0	0		#DIV/0!	#DIV/0!	#DIV/0!		#DIV/0!	0.0200	#DIV/0!	#DIV/0!	#DIV/0!	0.00	#DIV/0!
J TO K			28.0	0		#DIV/0!	#DIV/0!	#DIV/0!		#DIV/0!	0.0200	#DIV/0!	#DIV/0!	#DIV/0!	0.00	#DIV/0!
K TO L			28.0	0		#DIV/0!	#DIV/0!	#DIV/0!		#DIV/0!	0.0200	#DIV/0!	#DIV/0!	#DIV/0!	0.00	#DIV/0!
L TO M			28.0	0		#DIV/0!	#DIV/0!	#DIV/0!		#DIV/0!	0.0200	#DIV/0!	#DIV/0!	#DIV/0!	0.00	#DIV/0!
																0.2304

Pressure Drop Calculation - SVE-3

Intelidata

80 Pickett District Road, New Milford, CT

PRESSURE DROP CALCULATION

'E RUN	W LBS/HR	% O2	MW	SCFM (@70 F)	TEMP DEG F	PRES. PSIA	ACFM	DENSITY LBS/FT^3	ID INCHES	/ELOCIT FPS	VISC. CP	Nre	FF	PRES DRO PSI/100FT	EQUIV. LENGTH FEET	PRESS. DROP PSI
A TO B	357.0	20.9	28.8	80	60.0	13.70	84	0.07078	4.00	16.06	0.0200	28158	0.02503	0.0148	64.40	0.0095
B TO C	357.0	20.9	28.8	80	60.0	13.69	84	0.07073	4.00	16.07	0.0200	28158	0.02503	0.0148	60.00	0.0089
C TO D	357.0	20.9	28.8	80	60.0	13.68	84	0.07068	4.00	16.09	0.0200	28158	0.02503	0.0148	82.00	0.0121
D TO E	357.0	20.9	28.8	80	60.0	13.67	84	0.07062	4.00	16.10	0.0200	28158	0.02503	0.0148	46.00	0.0068
E TO F	357.0	20.9	28.8	80	60.0	13.66	84	0.07059	4.00	16.11	0.0200	28158	0.02503	0.0148	30.00	0.0044
F TO G	357.0	20.9	28.8	80	60.0	13.66	84	0.07056	4.00	16.11	0.0200	28158	0.02503	0.0148	30.00	0.0045
G TO H			28.0	0		13.65	0	#DIV/0!		#DIV/0!	0.0200	#DIV/0!	#DIV/0!	#DIV/0!	0.00	#DIV/0!
H TO I			28.0	0		#DIV/0!	#DIV/0!	#DIV/0!		#DIV/0!	0.0200	#DIV/0!	#DIV/0!	#DIV/0!	0.00	#DIV/0!
I TO J			28.0	0		#DIV/0!	#DIV/0!	#DIV/0!		#DIV/0!	0.0200	#DIV/0!	#DIV/0!	#DIV/0!	0.00	#DIV/0!
J TO K			28.0	0		#DIV/0!	#DIV/0!	#DIV/0!		#DIV/0!	0.0200	#DIV/0!	#DIV/0!	#DIV/0!	0.00	#DIV/0!
K TO L			28.0	0		#DIV/0!	#DIV/0!	#DIV/0!		#DIV/0!	0.0200	#DIV/0!	#DIV/0!	#DIV/0!	0.00	#DIV/0!
L TO M			28.0	0		#DIV/0!	#DIV/0!	#DIV/0!		#DIV/0!	0.0200	#DIV/0!	#DIV/0!	#DIV/0!	0.00	#DIV/0!
																0.0463

Pressure Drop Calculation - SVE Interior Feed Line

Intelidata

80 Pickett District Road, New Milford, CT

PRESSURE DROP CALCULATION

'E RUN	W LBS/HR	% O2	MW	SCFM (@70 F)	TEMP DEG F	PRES. PSIA	ACFM	DENSITY LBS/FT^3	ID INCHES	/ELOCIT FPS	VISC. CP	Nre	FF	PRES DRO PSI/100FT	EQUIV. LENGTH FEET	PRESS. DROP PSI
A TO B	1430.0	20.9	28.8	320	60.0	13.70	337	0.07078	6.00	28.60	0.0200	75194	0.02041	0.0255	86.60	0.0221
B TO C	1430.0	20.9	28.8	320	60.0	13.68	337	0.07066	6.00	28.64	0.0200	75194	0.02041	0.0255	65.00	0.0166
C TO D	1430.0	20.9	28.8	320	60.0	13.66	338	0.07058	6.00	28.68	0.0200	75194	0.02041	0.0256	116.00	0.0296
D TO E	1430.0	20.9	28.8	320	60.0	13.63	338	0.07043	6.00	28.74	0.0200	75194	0.02041	0.0256	65.00	0.0166
E TO F	1430.0	20.9	28.8	320	60.0	13.62	339	0.07034	6.00	28.78	0.0200	75194	0.02041	0.0256	76.60	0.0196
F TO G			28.0	0		13.60	0	#DIV/0!		#DIV/0!	0.0200	#DIV/0!	#DIV/0!	#DIV/0!	0.00	#DIV/0!
G TO H			28.0	0		#DIV/0!	#DIV/0!	#DIV/0!		#DIV/0!	0.0200	#DIV/0!	#DIV/0!	#DIV/0!	0.00	#DIV/0!
H TO I			28.0	0		#DIV/0!	#DIV/0!	#DIV/0!		#DIV/0!	0.0200	#DIV/0!	#DIV/0!	#DIV/0!	0.00	#DIV/0!
I TO J			28.0	0		#DIV/0!	#DIV/0!	#DIV/0!		#DIV/0!	0.0200	#DIV/0!	#DIV/0!	#DIV/0!	0.00	#DIV/0!
J TO K			28.0	0		#DIV/0!	#DIV/0!	#DIV/0!		#DIV/0!	0.0200	#DIV/0!	#DIV/0!	#DIV/0!	0.00	#DIV/0!
K TO L			28.0	0		#DIV/0!	#DIV/0!	#DIV/0!		#DIV/0!	0.0200	#DIV/0!	#DIV/0!	#DIV/0!	0.00	#DIV/0!
L TO M			28.0	0		#DIV/0!	#DIV/0!	#DIV/0!		#DIV/0!	0.0200	#DIV/0!	#DIV/0!	#DIV/0!	0.00	#DIV/0!
																0.1046

Pressure Drop Calculation - SVE-4

Intelidata

80 Pickett District Road, New Milford, CT

PRESSURE DROP CALCULATION

'E RUN	W LBS/HR	% O2	MW	SCFM (@70 F)	TEMP DEG F	PRES. PSIA	ACFM	DENSITY LBS/FT^3	ID INCHES	/ELOCIT FPS	VISC. CP	Nre	FF	PRES DROI PSI/100FT	EQUIV. LENGTH FEET	PRESS. DROP PSI
A TO B	357.0	20.9	28.8	80	60.0	13.70	84	0.07078	4.00	16.06	0.0200	28158	0.02503	0.0148	50.00	0.0074
B TO C	357.0	20.9	28.8	80	60.0	13.69	84	0.07074	4.00	16.07	0.0200	28158	0.02503	0.0148	83.00	0.0123
C TO D	357.0	20.9	28.8	80	60.0	13.68	84	0.07068	4.00	16.09	0.0200	28158	0.02503	0.0148	75.00	0.0111
D TO E	357.0	20.9	28.8	80	60.0	13.67	84	0.07062	4.00	16.10	0.0200	28158	0.02503	0.0148	44.40	0.0066
E TO F			28.0	0		13.66	0	#DIV/0!		#DIV/0!	0.0200	#DIV/0!	#DIV/0!	#DIV/0!	0.00	#DIV/0!
F TO G			28.0	0		#DIV/0!	#DIV/0!	#DIV/0!		#DIV/0!	0.0200	#DIV/0!	#DIV/0!	#DIV/0!	0.00	#DIV/0!
G TO H			28.0	0		#DIV/0!	#DIV/0!	#DIV/0!		#DIV/0!	0.0200	#DIV/0!	#DIV/0!	#DIV/0!	0.00	#DIV/0!
H TO I			28.0	0		#DIV/0!	#DIV/0!	#DIV/0!		#DIV/0!	0.0200	#DIV/0!	#DIV/0!	#DIV/0!	0.00	#DIV/0!
I TO J			28.0	0		#DIV/0!	#DIV/0!	#DIV/0!		#DIV/0!	0.0200	#DIV/0!	#DIV/0!	#DIV/0!	0.00	#DIV/0!
J TO K			28.0	0		#DIV/0!	#DIV/0!	#DIV/0!		#DIV/0!	0.0200	#DIV/0!	#DIV/0!	#DIV/0!	0.00	#DIV/0!
K TO L			28.0	0		#DIV/0!	#DIV/0!	#DIV/0!		#DIV/0!	0.0200	#DIV/0!	#DIV/0!	#DIV/0!	0.00	#DIV/0!
L TO M			28.0	0		#DIV/0!	#DIV/0!	#DIV/0!		#DIV/0!	0.0200	#DIV/0!	#DIV/0!	#DIV/0!	0.00	#DIV/0!
																0.0374

Pressure Drop Calculation - SVE-5

Intelidata

80 Pickett District Road, New Milford, CT

PRESSURE DROP CALCULATION

'E RUN	W LBS/HR	% O2	MW	SCFM (@70 F)	TEMP DEG F	PRES. PSIA	ACFM	DENSITY LBS/FT^3	ID INCHES	/ELOCIT' FPS	VISC. CP	Nre	FF	PRES DRO PSI/100FT	EQUIV. LENGTH FEET	PRESS. DROP PSI
A TO B	357.0	20.9	28.8	80	60.0	13.70	84	0.07078	4.00	16.06	0.0200	28158	0.02503	0.0148	35.00	0.0052
B TO C	357.0	20.9	28.8	80	60.0	13.69	84	0.07075	4.00	16.07	0.0200	28158	0.02503	0.0148	30.00	0.0044
C TO D	357.0	20.9	28.8	80	60.0	13.69	84	0.07073	4.00	16.07	0.0200	28158	0.02503	0.0148	73.00	0.0108
D TO E	357.0	20.9	28.8	80	60.0	13.68	84	0.07067	4.00	16.09	0.0200	28158	0.02503	0.0148	20.00	0.0030
E TO F	357.0	20.9	28.8	80	60.0	13.68	84	0.07066	4.00	16.09	0.0200	28158	0.02503	0.0148	44.40	0.0066
F TO G			28.0	0		13.67	0	#DIV/0!		#DIV/0!	0.0200	#DIV/0!	#DIV/0!	#DIV/0!	0.00	#DIV/0!
G TO H			28.0	0		#DIV/0!	#DIV/0!	#DIV/0!		#DIV/0!	0.0200	#DIV/0!	#DIV/0!	#DIV/0!	0.00	#DIV/0!
H TO I			28.0	0		#DIV/0!	#DIV/0!	#DIV/0!		#DIV/0!	0.0200	#DIV/0!	#DIV/0!	#DIV/0!	0.00	#DIV/0!
I TO J			28.0	0		#DIV/0!	#DIV/0!	#DIV/0!		#DIV/0!	0.0200	#DIV/0!	#DIV/0!	#DIV/0!	0.00	#DIV/0!
J TO K			28.0	0		#DIV/0!	#DIV/0!	#DIV/0!		#DIV/0!	0.0200	#DIV/0!	#DIV/0!	#DIV/0!	0.00	#DIV/0!
K TO L			28.0	0		#DIV/0!	#DIV/0!	#DIV/0!		#DIV/0!	0.0200	#DIV/0!	#DIV/0!	#DIV/0!	0.00	#DIV/0!
L TO M			28.0	0		#DIV/0!	#DIV/0!	#DIV/0!		#DIV/0!	0.0200	#DIV/0!	#DIV/0!	#DIV/0!	0.00	#DIV/0!
																0.0300

Pressure Drop Calculation - SVE-6

Intelidata

80 Pickett District Road, New Milford, CT

PRESSURE DROP CALCULATION

'E RUN	W LBS/HR	% O2	MW	SCFM (@70 F)	TEMP DEG F	PRES. PSIA	ACFM	DENSITY LBS/FT^3	ID INCHES	/ELOCIT FPS	VISC. CP	Nre	FF	PRES DROI PSI/100FT	EQUIV. LENGTH FEET	PRESS. DROP PSI
A TO B	357.0	20.9	28.8	80	60.0	13.70	84	0.07078	4.00	16.06	0.0200	28158	0.02503	0.0148	43.00	0.0064
B TO C	357.0	20.9	28.8	80	60.0	13.69	84	0.07075	4.00	16.07	0.0200	28158	0.02503	0.0148	30.00	0.0044
C TO D	357.0	20.9	28.8	80	60.0	13.69	84	0.07072	4.00	16.08	0.0200	28158	0.02503	0.0148	27.00	0.0040
D TO E	357.0	20.9	28.8	80	60.0	13.69	84	0.07070	4.00	16.08	0.0200	28158	0.02503	0.0148	44.40	0.0066
E TO F			28.0	0		13.68	0	#DIV/0!		#DIV/0!	0.0200	#DIV/0!	#DIV/0!	#DIV/0!	0.00	#DIV/0!
F TO G			28.0	0		#DIV/0!	#DIV/0!	#DIV/0!		#DIV/0!	0.0200	#DIV/0!	#DIV/0!	#DIV/0!	0.00	#DIV/0!
G TO H			28.0	0		#DIV/0!	#DIV/0!	#DIV/0!		#DIV/0!	0.0200	#DIV/0!	#DIV/0!	#DIV/0!	0.00	#DIV/0!
H TO I			28.0	0		#DIV/0!	#DIV/0!	#DIV/0!		#DIV/0!	0.0200	#DIV/0!	#DIV/0!	#DIV/0!	0.00	#DIV/0!
I TO J			28.0	0		#DIV/0!	#DIV/0!	#DIV/0!		#DIV/0!	0.0200	#DIV/0!	#DIV/0!	#DIV/0!	0.00	#DIV/0!
J TO K			28.0	0		#DIV/0!	#DIV/0!	#DIV/0!		#DIV/0!	0.0200	#DIV/0!	#DIV/0!	#DIV/0!	0.00	#DIV/0!
K TO L			28.0	0		#DIV/0!	#DIV/0!	#DIV/0!		#DIV/0!	0.0200	#DIV/0!	#DIV/0!	#DIV/0!	0.00	#DIV/0!
L TO M			28.0	0		#DIV/0!	#DIV/0!	#DIV/0!		#DIV/0!	0.0200	#DIV/0!	#DIV/0!	#DIV/0!	0.00	#DIV/0!
																0.0214

Pressure Drop Calculation - SVE-7

Intelidata

80 Pickett District Road, New Milford, CT

PRESSURE DROP CALCULATION

'E RUN	W LBS/HR	% O2	MW	SCFM (@70 F)	TEMP DEG F	PRES. PSIA	ACFM	DENSITY LBS/FT^3	ID INCHES	/ELOCIT FPS	VISC. CP	Nre	FF	PRES DRO PSI/100FT	EQUIV. LENGTH FEET	PRESS. DROP PSI
A TO B	357.0	20.9	28.8	80	60.0	13.70	84	0.07078	4.00	16.06	0.0200	28158	0.02503	0.0148	49.00	0.0072
B TO C	357.0	20.9	28.8	80	60.0	13.69	84	0.07074	4.00	16.07	0.0200	28158	0.02503	0.0148	30.00	0.0044
C TO D	357.0	20.9	28.8	80	60.0	13.69	84	0.07072	4.00	16.08	0.0200	28158	0.02503	0.0148	72.00	0.0107
D TO E	357.0	20.9	28.8	80	60.0	13.68	84	0.07066	4.00	16.09	0.0200	28158	0.02503	0.0148	44.40	0.0066
E TO F			28.0	0		13.67	0	#DIV/0!		#DIV/0!	0.0200	#DIV/0!	#DIV/0!	#DIV/0!	0.00	#DIV/0!
F TO G			28.0	0		#DIV/0!	#DIV/0!	#DIV/0!		#DIV/0!	0.0200	#DIV/0!	#DIV/0!	#DIV/0!	0.00	#DIV/0!
G TO H			28.0	0		#DIV/0!	#DIV/0!	#DIV/0!		#DIV/0!	0.0200	#DIV/0!	#DIV/0!	#DIV/0!	0.00	#DIV/0!
H TO I			28.0	0		#DIV/0!	#DIV/0!	#DIV/0!		#DIV/0!	0.0200	#DIV/0!	#DIV/0!	#DIV/0!	0.00	#DIV/0!
I TO J			28.0	0		#DIV/0!	#DIV/0!	#DIV/0!		#DIV/0!	0.0200	#DIV/0!	#DIV/0!	#DIV/0!	0.00	#DIV/0!
J TO K			28.0	0		#DIV/0!	#DIV/0!	#DIV/0!		#DIV/0!	0.0200	#DIV/0!	#DIV/0!	#DIV/0!	0.00	#DIV/0!
K TO L			28.0	0		#DIV/0!	#DIV/0!	#DIV/0!		#DIV/0!	0.0200	#DIV/0!	#DIV/0!	#DIV/0!	0.00	#DIV/0!
L TO M			28.0	0		#DIV/0!	#DIV/0!	#DIV/0!		#DIV/0!	0.0200	#DIV/0!	#DIV/0!	#DIV/0!	0.00	#DIV/0!
																0.0289

Total Estimated Pressure Loss in the Air Sparge and SVE Systems

Intelidata

80 Pickett District Road, New Milford, Connecticut

Pressure Loss Estimation for Air Sparge System		
Equipment	Estimated Pressure Loss (psi)	Source
Piping to wells	2.83	Attached pressure drop calcs
Aftercooler	0.50	Manufacturer Specs (Appendix D)
Inlet filter	0.22	Typical value
Flowmeter	0.07	Manufacturer Specs (Appendix D)
Connections in trailer	1.00	estimated
Total Pressure loss	4.62	
Estimated Pressure at Well Head	12.0	(operating pressure, breakthrough pressure estimated at 15 psi)
Total estimated pressure required	16.6	
Compressor Rating	23.2	(excess pressure will be vented through VV200)

Pressure Loss Estimation for SVE System		
Equipment	Estimated Pressure Loss (inches of water)	Source
Piping to wells	19.5	Attached pressure drop calcs
Connection in trailer		
Moisture Separator	1.5	Manufacturer Specs (Appendix D)
Inline filter	6.0	Typical value
Flowmeter	3.0	Manufacturer Specs (Appendix D)
Piping	4.0	estimated
Total Pressure loss	34.0	
Estimated Vacuum at Well Head	14.0	(will produce approximately 80 cfm)
Total estimated Vacuum required	48.0	
Blower Rating @ 560 cfm	50	

APPENDIX F

Laboratory Data Sheets

Report Date:
23-Jul-04 16:07

SPECTRUM ANALYTICAL, INC.
Featuring
HANIBAL TECHNOLOGY

☑ Final Report
☐ Re-Issued Report
☐ Revised Report

Laboratory Report

Environmental Resources Management
146 Wyllys Street, Suite 300
Hartford, CT 06106
Attn: Robert Drake

Project: Intelidata - New Milford, CT
Project #: 0016718

Laboratory ID	Client Sample ID	Container	Matrix	Date Sampled	Date Received
SA15509-01	SVE-1	Summa canister	Air	16-Jul-04 15:10	21-Jul-04 15:30
SA15509-02	SVE-2	Summa canister	Air	16-Jul-04 15:15	21-Jul-04 15:30

I attest that the information contained within the report has been reviewed for accuracy and checked against the quality control requirements for each method. All applicable NELAC requirements have been met.
Please note that this report contains 5 pages of analytical data plus Chain of Custody document(s).
This report may not be reproduced, except in full, without written approval from Spectrum Analytical, Inc.

Massachusetts Certification # M-MA138/MA1110
Connecticut # PH-0777
Florida # E87600/E87936
Maine # MA138
New Hampshire # 2538
New York # 11393/11840
Rhode Island # 98
USDA # S-51435

ACCREDITED IN ACCORDANCE WITH nelac

Authorized by:

Hanibal C. Tayeh, Ph.D.
President/Laboratory Director

Spectrum Analytical, Inc. is a NELAC accredited laboratory organization and meets NELAC testing standards. Use of the NELAC logo however does not insure that Spectrum is currently accredited for the specific method indicated. Please refer to our "Quality" webpage at www.spectrum-analytical.com for a full listing of our current certifications.

Sample Identification	Client Project #	Matrix	Collection Date/Time	Received
SVE-1 SA15509-01	0016718	Air	16-Jul-04 15:10	21-Jul-04

Analyte(s)	*Result ppbv*	**RDL*	*Result ug/m³*	**RDL*	*Method Ref.*	*Analyzed*	*Batch*	*Analyst*	*Flag*
Air Quality Analyses									
Chlorinated VOCs by EPA TO-14									
Chloromethane	BRL	1.56	BRL	3.22	Mod. EPA TO-14A	23-Jul-04	4071242	DG	
Vinyl chloride	BRL	1.56	BRL	3.99	"	"	"	"	
Chloroethane	BRL	1.56	BRL	4.12	"	"	"	"	
1,1-Dichloroethene	2.12	1.56	8.41	6.19	"	"	"	"	
Methylene chloride	2.66	1.56	9.24	5.42	"	"	"	"	
1,1-Dichloroethane	BRL	1.56	BRL	6.32	"	"	"	"	
cis-1,2-Dichloroethene	BRL	1.56	BRL	6.19	"	"	"	"	
Chloroform	BRL	1.56	BRL	7.59	"	"	"	"	
1,2-Dichloroethane	BRL	1.56	BRL	6.32	"	"	"	"	
1,1,1-Trichloroethane	156	1.56	851.14	8.51	"	"	"	"	
Carbon tetrachloride	BRL	1.56	BRL	9.81	"	"	"	"	
1,2-Dichloropropane	BRL	1.56	BRL	7.21	"	"	"	"	
Trichloroethene	23.8	1.56	127.91	8.38	"	"	"	"	
cis-1,3-Dichloropropene	BRL	1.56	BRL	7.08	"	"	"	"	
trans-1,3-Dichloropropene	BRL	1.56	BRL	7.08	"	"	"	"	
1,1,2-Trichloroethane	BRL	1.56	BRL	8.51	"	"	"	"	
Tetrachloroethene	3.09	1.56	20.95	10.58	"	"	"	"	
Chlorobenzene	BRL	1.56	BRL	7.18	"	"	"	"	
1,1,2,2-Tetrachloroethane	BRL	1.56	BRL	10.71	"	"	"	"	
1,3-Dichlorobenzene	BRL	1.56	BRL	9.38	"	"	"	"	
1,4-Dichlorobenzene	BRL	1.56	BRL	9.38	"	"	"	"	
1,2-Dichlorobenzene	BRL	1.56	BRL	9.38	"	"	"	"	
Hexachlorobutadiene	BRL	1.56	BRL	16.63	"	"	"	"	
Surrogate: 4-Bromofluorobenzene	*96.8*	*75-125 %*			"	"	"	"	

Sample Identification	Client Project #	Matrix	Collection Date/Time	Received
SVE-2 SA15509-02	0016718	Air	16-Jul-04 15:15	21-Jul-04

Analyte(s)	*Result ppbv*	**RDL*	*Result ug/m³*	**RDL*	*Method Ref.*	*Analyzed*	*Batch*	*Analyst*	*Flag*
Air Quality Analyses									
Chlorinated VOCs by EPA TO-14									
Chloromethane	BRL	51.6	BRL	106.58	Mod. EPA TO-14A	23-Jul-04	4071242	DG	
Vinyl chloride	BRL	51.6	BRL	131.90	"	"	"	"	
Chloroethane	BRL	51.6	BRL	136.12	"	"	"	"	
1,1-Dichloroethene	57.8	51.6	229.31	204.71	"	"	"	"	
Methylene chloride	125	51.6	434.05	179.18	"	"	"	"	
1,1-Dichloroethane	76.4	51.6	309.35	208.93	"	"	"	"	
cis-1,2-Dichloroethene	BRL	51.6	BRL	204.61	"	"	"	"	
Chloroform	BRL	51.6	BRL	251.14	"	"	"	"	
1,2-Dichloroethane	BRL	51.6	BRL	208.93	"	"	"	"	
1,1,1-Trichloroethane	6030	51.6	32,899.88	281.53	"	"	"	"	
Carbon tetrachloride	BRL	51.6	BRL	324.58	"	"	"	"	
1,2-Dichloropropane	BRL	51.6	BRL	238.48	"	"	"	"	
Trichloroethene	263	51.6	1,413.42	277.31	"	"	"	"	
cis-1,3-Dichloropropene	BRL	51.6	BRL	234.26	"	"	"	"	
trans-1,3-Dichloropropene	BRL	51.6	BRL	234.26	"	"	"	"	
1,1,2-Trichloroethane	BRL	51.6	BRL	281.53	"	"	"	"	
Tetrachloroethene	308	51.6	2,088.61	349.91	"	"	"	"	
Chlorobenzene	BRL	51.6	BRL	237.63	"	"	"	"	
1,1,2,2-Tetrachloroethane	BRL	51.6	BRL	354.34	"	"	"	"	
1,3-Dichlorobenzene	BRL	51.6	BRL	310.23	"	"	"	"	
1,4-Dichlorobenzene	BRL	51.6	BRL	310.23	"	"	"	"	
1,2-Dichlorobenzene	BRL	51.6	BRL	310.23	"	"	"	"	
Hexachlorobutadiene	BRL	51.6	BRL	550.19	"	"	"	"	
Surrogate: 4-Bromofluorobenzene	*95.2*	*75-125 %*			"	"	"	"	

This laboratory report is not valid without an authorized signature on the cover page.

*Reportable Detection Limit BRL = Below Reporting Limit

Air Quality Analyses - Quality Control

Analyte(s)	Result	*RDL	Units	Spike Level	Source Result	%REC	%REC Limits	RPD	RPD Limit	Flag
Batch 4071242 - General Air Prep										
Blank (4071242-BLK1)				Prepared & Analyzed: 22-Jul-04						
Chloromethane	BRL	0.500	ppbv							
Vinyl chloride	BRL	0.500	ppbv							
Chloroethane	BRL	0.500	ppbv							
1,1-Dichloroethene	BRL	0.500	ppbv							
Methylene chloride	BRL	0.500	ppbv							
1,1-Dichloroethane	BRL	0.500	ppbv							
cis-1,2-Dichloroethene	BRL	0.500	ppbv							
Chloroform	BRL	0.500	ppbv							
1,2-Dichloroethane	BRL	0.500	ppbv							
1,1,1-Trichloroethane	BRL	0.500	ppbv							
Carbon tetrachloride	BRL	0.500	ppbv							
1,2-Dichloropropane	BRL	0.500	ppbv							
Trichloroethene	BRL	0.500	ppbv							
cis-1,3-Dichloropropene	BRL	0.500	ppbv							
trans-1,3-Dichloropropene	BRL	0.500	ppbv							
1,1,2-Trichloroethane	BRL	0.500	ppbv							
Tetrachloroethene	BRL	0.500	ppbv							
Chlorobenzene	BRL	0.500	ppbv							
1,1,2,2-Tetrachloroethane	BRL	0.500	ppbv							
1,3-Dichlorobenzene	BRL	0.500	ppbv							
1,4-Dichlorobenzene	BRL	0.500	ppbv							
1,2-Dichlorobenzene	BRL	0.500	ppbv							
Hexachlorobutadiene	BRL	0.500	ppbv							
Surrogate: 4-Bromofluorobenzene	*11.8*		ppbv	*12.5*		*94.4*	*75-125*			
LCS (4071242-BS1)				Prepared & Analyzed: 22-Jul-04						
Chloromethane	8.30		ppbv	10.0		83.0	70-130			
Vinyl chloride	10.0		ppbv	10.0		100	70-130			
Chloroethane	11.9		ppbv	10.0		119	70-130			
1,1-Dichloroethene	10.2		ppbv	10.0		102	70-130			
Methylene chloride	9.32		ppbv	10.0		93.2	70-130			
1,1-Dichloroethane	9.98		ppbv	10.0		99.8	70-130			
cis-1,2-Dichloroethene	10.7		ppbv	10.0		107	70-130			
Chloroform	9.49		ppbv	10.0		94.9	70-130			
1,2-Dichloroethane	10.0		ppbv	10.0		100	70-130			
1,1,1-Trichloroethane	10.3		ppbv	10.0		103	70-130			
Carbon tetrachloride	9.75		ppbv	10.0		97.5	70-130			
1,2-Dichloropropane	10.4		ppbv	10.0		104	70-130			
Trichloroethene	10.6		ppbv	10.0		106	70-130			
cis-1,3-Dichloropropene	11.2		ppbv	10.0		112	70-130			
trans-1,3-Dichloropropene	10.2		ppbv	10.0		102	70-130			
1,1,2-Trichloroethane	9.59		ppbv	10.0		95.9	70-130			
Tetrachloroethene	9.83		ppbv	10.0		98.3	70-130			
Chlorobenzene	9.41		ppbv	10.0		94.1	70-130			
1,1,2,2-Tetrachloroethane	10.5		ppbv	10.0		105	70-130			
1,3-Dichlorobenzene	10.6		ppbv	10.0		106	70-130			
1,4-Dichlorobenzene	10.8		ppbv	10.0		108	70-130			
1,2-Dichlorobenzene	10.8		ppbv	10.0		108	70-130			
Hexachlorobutadiene	8.51		ppbv	10.0		85.1	70-130			
Surrogate: 4-Bromofluorobenzene	*12.7*		ppbv	*12.5*		*102*	*75-125*			

Notes and Definitions

BRL	Below Reporting Limit - Analyte NOT DETECTED at or above the reporting limit
dry	Sample results reported on a dry weight basis
NR	Not Reported
RPD	Relative Percent Difference

A plus sign (+) in the Method Reference column indicates the method is not accredited by NELAC.

Laboratory Control Sample (LCS): A known matrix spiked with compound(s) representative of the target analytes, which is used to document laboratory performance.

Matrix Duplicate: An intra-laboratory split sample which is used to document the precision of a method in a given sample matrix.

Matrix Spike: An aliquot of a sample spiked with a known concentration of target analyte(s). The spiking occurs prior to sample preparation and analysis. A matrix spike is used to document the bias of a method in a given sample matrix.

Method Blank: An analyte-free matrix to which all reagents are added in the same volumes or proportions as used in sample processing. The method blank should be carried through the complete sample preparation and analytical procedure. The method blank is used to document contamination resulting from the analytical process.

Method Detection Limit (MDL): The minimum concentration of a substance that can be measured and reported with 99% confidence that the analyte concentration is greater than zero and is determined from analysis of a sample in a given matrix type containing the analyte.

Reportable Detection Limit (RDL): The lowest concentration that can be reliably achieved within specified limits of precision and accuracy during routine laboratory operating conditions. The RDL is generally 5 to 10 times the MDL. However, it may be nominally chosen within these guidelines to simplify data reporting. For many analytes the RDL analyte concentration is selected as the lowest non-zero standard in the calibration curve. Sample RDLs are highly matrix-dependent.

Surrogate: An organic compound which is similar to the target analyte(s) in chemical composition and behavior in the analytical process, but which is not normally found in environmental samples. These compounds are spiked into all blanks, standards, and samples prior to analysis. Percent recoveries are calculated for each surrogate.

Validated by:
Hanibal C. Tayeh, Ph.D.
Dan DeAlmeida

SA15509

SPECTRUM ANALYTICAL, INC.
Featuring
HANIBAL TECHNOLOGY

CHAIN OF CUSTODY RECORD

Page 1 of 1

Special Handling:
- ☐ Standard TAT - 7 to 10 business days
- ☒ Rush TAT - Date Needed: 7/23/04
- All TATs subject to laboratory approval. Min. 24-hour notification needed for rushes.
- Samples disposed of after 60 days unless otherwise instructed.

Report To: ERM
Two Hartford Sq. West, Suite 300
146 Hayllys Street
Hartford CT 06106
Project Mgr.: Bob Drake

Invoice To: WA#400 2484 (01)
SAME
P.O. No.: ____ RQN: ____

Project No.: 0016718
Site Name: Antelidata
Location: New Milford State: CT
Sampler(s): J. Ferret

1=$Na_2S_2O_3$ 2=HCl 3=H_2SO_4 4=HNO_3 5=NaOH 6=Ascorbic Acid
7=CH_3OH 8= $NaHSO_4$ 9=____ 10=____

DW=Drinking Water GW=Groundwater WW=Wastewater
O=Oil SW= Surface Water SO=Soil SL=Sludge A=Air
X1=____ X2=____ X3=____

G=Grab C=Composite

QA Reporting Notes: (check if needed)
State specific reporting standards *If applicable, please list below.*
☐ Provide MCP CAM Report
Were all field QC requirements met as per MADEP CAM Section 2.0?
☐ Yes ☐ No
(Response required for CAM report)

Lab Id:	Sample Id:	Date:	Time:	Type	Matrix	Preservative	# of VOA Vials	# of Amber Glass	# of Clear Glass	# of Plastic	Summa can	TO-14 CVOCs only						
SA15509-01	SVE-1	7/16/04	1510	G	A	–					1	X						
↓ 02	SVE-2	7/16/04	1515	G	A	–					1	X						

☒ Fax results when available to (AEO) 524-5680
☐ E-mail to ____
EDD Format ____

Condition upon receipt: ☐ Iced ☒ Ambient °C 23

Relinquished by:	Received by:	Date:	Time:
Cynthia E. Vodzyn	[signature]	7/21/04	1:25
[signature]	J. Knowles	7/21/04	330

SPECTRUM ANALYTICAL, INC.
Featuring
HANIBAL TECHNOLOGY

CHAIN OF CUSTODY RECORD

Page 1 of 1

Special Handling:
- ☐ Standard TAT - 7 to 10 business days
- ☒ Rush TAT - Date Needed: 7/23/04
- All TATs subject to laboratory approval. Min. 24-hour notification needed for rushes.
- Samples disposed of after 60 days unless otherwise instructed.

Report To: SMI
[illegible]
Project Mgr.: [illegible]

Invoice To: [illegible]
P.O. No.: _____ RQN: _____

Project No.: [illegible]
Site Name: [illegible]
Location: [illegible] State: [illegible]
Sampler(s): [illegible]

1=$Na_2S_2O_3$ 2=HCl 3=H_2SO_4 4=HNO_3 5=NaOH 6=Ascorbic Acid
7=CH_3OH 8= $NaHSO_4$ 9=_____ 10=_____

DW=Drinking Water GW=Groundwater WW=Wastewater
O=Oil SW= Surface Water SO=Soil SL=Sludge A=Air
X1=_____ X2=_____ X3=_____

G=Grab C=Composite

Lab Id:	Sample Id:	Date:	Time:	Type	Matrix	Preservative	# of VOA Vials	# of Amber Glass	# of Clear Glass	# of Plastic	Sample Gas	TC-14 Accessories								QA Reporting Notes: (check if needed)
	SVE-1	7/16/04	1510	G	A	–					1	X								State specific reporting standards *If applicable, please list below.*
	SVE-2	7/16/04	1515	G	A	–					1	X								☐ Provide MCP CAM Report Were all field QC requirements met as per MADEP CAM Section 2.0? ☐ Yes ☐ No *(Response required for CAM report)*

☒ Fax results when available to (AL) 524 5680
☐ E-mail to _____
EDD Format _____

Condition upon receipt: ☐ Iced ☐ Ambient ☐ °C _____

Relinquished by:	Received by:	Date:	Time:
[illegible]	[illegible]	7/21/04	1:25

11 Almgren Drive • Agawam, Massachusetts 01001 • 413-789-9018 • Fax 413-789-4076 • www.spectrum-analytical.com

Report Date:
29-Jul-04 11:22

SPECTRUM ANALYTICAL, INC.
Featuring
HANIBAL TECHNOLOGY

☑ Final Report
☐ Re-Issued Report
☐ Revised Report

Laboratory Report

Environmental Resources Management
146 Wyllys Street, Suite 300
Hartford, CT 06106
Attn: Robert Drake

Project: Intelidata - New Milford, CT
Project #: 0016718

Laboratory ID	Client Sample ID	Container	Matrix	Date Sampled	Date Received
SA15383-01	Indoor	Summa canister	Air	15-Jul-04 16:00	19-Jul-04 13:15

I attest that the information contained within the report has been reviewed for accuracy and checked against the quality control requirements for each method. All applicable NELAC requirements have been met.
Please note that this report contains 6 pages of analytical data plus Chain of Custody document(s).
This report may not be reproduced, except in full, without written approval from Spectrum Analytical, Inc.

Massachusetts Certification # M-MA138/MA1110
Connecticut # PH-0777
Florida # E87600/E87936
Maine # MA138
New Hampshire # 2538
New York # 11393/11840
Rhode Island # 98
USDA # S-51435

ACCREDITED IN ACCORDANCE WITH nelac

Authorized by:

Hanibal C. Tayeh, Ph.D.
President/Laboratory Director

Spectrum Analytical, Inc. is a NELAC accredited laboratory organization and meets NELAC testing standards. Use of the NELAC logo however does not insure that Spectrum is currently accredited for the specific method indicated. Please refer to our "Quality" webpage at www.spectrum-analytical.com for a full listing of our current certifications.

Sample Identification	Client Project #	Matrix	Collection Date/Time	Received
Indoor	0016718	Air	15-Jul-04 16:00	19-Jul-04
SA15383-01				

Analyte(s)	*Result ppbv*	**RDL*	*Result ug/m³*	**RDL*	*Method Ref.*	*Analyzed*	*Batch*	*Analyst*	*Flag*
Air Quality Analyses									
Modified EPA TO-14A									
Dichlorodifluoromethane (Freon12)	BRL	0.500	BRL	2.47	Mod. EPA TO-14A	20-Jul-04	4071072	DG	
Chloromethane	0.720	0.500	1.49	1.03	"	"	"	"	
1,2-Dichlorotetrafluoroethane (Freon 114)	BRL	0.500	BRL	3.49	"	"	"	"	
Vinyl chloride	BRL	0.500	BRL	1.28	"	"	"	"	
Bromomethane	BRL	0.500	BRL	1.94	"	"	"	"	
Chloroethane	BRL	0.500	BRL	1.32	"	"	"	"	
Trichlorofluoromethane (Freon 11)	BRL	0.500	BRL	2.81	"	"	"	"	
1,1-Dichloroethene	BRL	0.500	BRL	1.98	"	"	"	"	
Methylene chloride	14.5	0.500	50.35	1.74	"	"	"	"	
1,1,2-Trichlorotrifluoroethane (Freon 113)	BRL	0.500	BRL	3.83	"	"	"	"	
1,1-Dichloroethane	BRL	0.500	BRL	2.02	"	"	"	"	
cis-1,2-Dichloroethene	BRL	0.500	BRL	1.98	"	"	"	"	
Chloroform	BRL	0.500	BRL	2.43	"	"	"	"	
1,2-Dichloroethane	BRL	0.500	BRL	2.02	"	"	"	"	
1,1,1-Trichloroethane	13.7	0.500	74.75	2.73	"	"	"	"	
Benzene	BRL	0.500	BRL	1.60	"	"	"	"	
Carbon tetrachloride	BRL	0.500	BRL	3.15	"	"	"	"	
1,2-Dichloropropane	BRL	0.500	BRL	2.31	"	"	"	"	
Trichloroethene	BRL	0.500	BRL	2.69	"	"	"	"	
cis-1,3-Dichloropropene	BRL	0.500	BRL	2.27	"	"	"	"	
trans-1,3-Dichloropropene	BRL	0.500	BRL	2.27	"	"	"	"	
1,1,2-Trichloroethane	BRL	0.500	BRL	2.73	"	"	"	"	
Toluene	12.8	0.500	48.16	1.88	"	"	"	"	
1,2-Dibromoethane (EDB)	BRL	0.500	BRL	3.84	"	"	"	"	
Tetrachloroethene	2.65	0.500	17.97	3.39	"	"	"	"	
Chlorobenzene	BRL	0.500	BRL	2.30	"	"	"	"	
Ethylbenzene	0.730	0.500	3.16	2.17	"	"	"	"	
m,p-Xylene	2.95	0.500	12.79	2.17	"	"	"	"	
Styrene	2.10	0.500	8.93	2.13	"	"	"	"	
o-Xylene	0.970	0.500	4.21	2.17	"	"	"	"	
1,1,2,2-Tetrachloroethane	BRL	0.500	BRL	3.43	"	"	"	"	
1,3,5-Trimethylbenzene	1.89	0.500	9.29	2.46	"	"	"	"	
4-Ethyltoluene	1.87	0.500	9.19	2.46	"	"	"	"	
1,2,4-Trimethylbenzene	6.41	0.500	31.51	2.46	"	"	"	"	
1,3-Dichlorobenzene	BRL	0.500	BRL	3.01	"	"	"	"	
Benzyl chloride	BRL	0.500	BRL	2.58	"	"	"	"	
1,4-Dichlorobenzene	4.17	0.500	25.07	3.01	"	"	"	"	
1,2-Dichlorobenzene	BRL	0.500	BRL	3.01	"	"	"	"	
1,2,4-Trichlorobenzene	BRL	0.500	BRL	3.71	"	"	"	"	
Hexachlorobutadiene	BRL	0.500	BRL	5.33	"	"	"	"	
Surrogate: 4-Bromofluorobenzene	*117*	*75-125 %*			"	"	"	"	

This laboratory report is not valid without an authorized signature on the cover page.

*Reportable Detection Limit BRL = Below Reporting Limit

Air Quality Analyses - Quality Control

Analyte(s)	Result	*RDL	Units	Spike Level	Source Result	%REC	%REC Limits	RPD	RPD Limit	Flag
Batch 4071072 - General Air Prep										
Blank (4071072-BLK1)				Prepared & Analyzed: 20-Jul-04						
Dichlorodifluoromethane (Freon12)	BRL	0.500	ppbv							
Chloromethane	BRL	0.500	ppbv							
1,2-Dichlorotetrafluoroethane (Freon 114)	BRL	0.500	ppbv							
Vinyl chloride	BRL	0.500	ppbv							
Bromomethane	BRL	0.500	ppbv							
Chloroethane	BRL	0.500	ppbv							
Trichlorofluoromethane (Freon 11)	BRL	0.500	ppbv							
1,1-Dichloroethene	BRL	0.500	ppbv							
Methylene chloride	BRL	0.500	ppbv							
1,1,2-Trichlorotrifluoroethane (Freon 113)	BRL	0.500	ppbv							
1,1-Dichloroethane	BRL	0.500	ppbv							
cis-1,2-Dichloroethene	BRL	0.500	ppbv							
Chloroform	BRL	0.500	ppbv							
1,2-Dichloroethane	BRL	0.500	ppbv							
1,1,1-Trichloroethane	BRL	0.500	ppbv							
Benzene	BRL	0.500	ppbv							
Carbon tetrachloride	BRL	0.500	ppbv							
1,2-Dichloropropane	BRL	0.500	ppbv							
Trichloroethene	BRL	0.500	ppbv							
cis-1,3-Dichloropropene	BRL	0.500	ppbv							
trans-1,3-Dichloropropene	BRL	0.500	ppbv							
1,1,2-Trichloroethane	BRL	0.500	ppbv							
Toluene	BRL	0.500	ppbv							
1,2-Dibromoethane (EDB)	BRL	0.500	ppbv							
Tetrachloroethene	BRL	0.500	ppbv							
Chlorobenzene	BRL	0.500	ppbv							
Ethylbenzene	BRL	0.500	ppbv							
m,p-Xylene	BRL	0.500	ppbv							
Styrene	BRL	0.500	ppbv							
o-Xylene	BRL	0.500	ppbv							
1,1,2,2-Tetrachloroethane	BRL	0.500	ppbv							
1,3,5-Trimethylbenzene	BRL	0.500	ppbv							
4-Ethyltoluene	BRL	0.500	ppbv							
1,2,4-Trimethylbenzene	BRL	0.500	ppbv							
1,3-Dichlorobenzene	BRL	0.500	ppbv							
Benzyl chloride	BRL	0.500	ppbv							
1,4-Dichlorobenzene	BRL	0.500	ppbv							
1,2-Dichlorobenzene	BRL	0.500	ppbv							
1,2,4-Trichlorobenzene	BRL	0.500	ppbv							
Hexachlorobutadiene	BRL	0.500	ppbv							
Surrogate: 4-Bromofluorobenzene	*11.9*		ppbv	*12.5*		*95.2*	*75-125*			
LCS (4071072-BS1)				Prepared & Analyzed: 20-Jul-04						
Dichlorodifluoromethane (Freon12)	8.76		ppbv	10.0		87.6	70-130			
Chloromethane	7.75		ppbv	10.0		77.5	70-130			
1,2-Dichlorotetrafluoroethane (Freon 114)	8.58		ppbv	10.0		85.8	70-130			
Vinyl chloride	9.21		ppbv	10.0		92.1	70-130			
Bromomethane	10.4		ppbv	10.0		104	70-130			
Chloroethane	11.5		ppbv	10.0		115	70-130			
Trichlorofluoromethane (Freon 11)	9.23		ppbv	10.0		92.3	70-130			
1,1-Dichloroethene	9.14		ppbv	10.0		91.4	70-130			
Methylene chloride	9.19		ppbv	10.0		91.9	70-130			
1,1,2-Trichlorotrifluoroethane (Freon 113)	8.82		ppbv	10.0		88.2	70-130			
1,1-Dichloroethane	9.53		ppbv	10.0		95.3	70-130			
cis-1,2-Dichloroethene	9.52		ppbv	10.0		95.2	70-130			

Air Quality Analyses - Quality Control

Analyte(s)	Result	*RDL	Units	Spike Level	Source Result	%REC	%REC Limits	RPD	RPD Limit	Flag
Batch 4071072 - General Air Prep										
LCS (4071072-BS1)				Prepared & Analyzed: 20-Jul-04						
Chloroform	9.58		ppbv	10.0		95.8	70-130			
1,2-Dichloroethane	9.83		ppbv	10.0		98.3	70-130			
1,1,1-Trichloroethane	10.2		ppbv	10.0		102	70-130			
Benzene	9.68		ppbv	10.0		96.8	70-130			
Carbon tetrachloride	9.24		ppbv	10.0		92.4	70-130			
1,2-Dichloropropane	9.25		ppbv	10.0		92.5	70-130			
Trichloroethene	8.93		ppbv	10.0		89.3	70-130			
cis-1,3-Dichloropropene	9.61		ppbv	10.0		96.1	70-130			
trans-1,3-Dichloropropene	8.91		ppbv	10.0		89.1	70-130			
1,1,2-Trichloroethane	9.03		ppbv	10.0		90.3	70-130			
Toluene	8.89		ppbv	10.0		88.9	70-130			
1,2-Dibromoethane (EDB)	8.92		ppbv	10.0		89.2	70-130			
Tetrachloroethene	8.22		ppbv	10.0		82.2	70-130			
Chlorobenzene	8.51		ppbv	10.0		85.1	70-130			
Ethylbenzene	8.70		ppbv	10.0		87.0	70-130			
m,p-Xylene	17.5		ppbv	20.0		87.5	70-130			
Styrene	11.2		ppbv	10.0		112	70-130			
o-Xylene	9.34		ppbv	10.0		93.4	70-130			
1,1,2,2-Tetrachloroethane	10.4		ppbv	10.0		104	70-130			
1,3,5-Trimethylbenzene	11.0		ppbv	10.0		110	70-130			
4-Ethyltoluene	9.09		ppbv	10.0		90.9	70-130			
1,2,4-Trimethylbenzene	9.69		ppbv	10.0		96.9	70-130			
1,3-Dichlorobenzene	8.88		ppbv	10.0		88.8	70-130			
Benzyl chloride	13.4		ppbv	10.0		134	70-130			QC-1
1,4-Dichlorobenzene	8.96		ppbv	10.0		89.6	70-130			
1,2-Dichlorobenzene	8.83		ppbv	10.0		88.3	70-130			
1,2,4-Trichlorobenzene	9.60		ppbv	10.0		96.0	70-130			
Hexachlorobutadiene	6.15		ppbv	10.0		61.5	70-130			QC-1
Surrogate: 4-Bromofluorobenzene	*13.4*		ppbv	*12.5*		*107*	*75-125*			
Duplicate (4071072-DUP1)		**Source: SA15332-01**		Prepared & Analyzed: 20-Jul-04						
Dichlorodifluoromethane (Freon12)	1.58	0.500	ppbv		1.56			1.27	30	
Chloromethane	0.490	0.500	ppbv		0.480			2.06	30	
1,2-Dichlorotetrafluoroethane (Freon 114)	BRL	0.500	ppbv		BRL				30	
Vinyl chloride	BRL	0.500	ppbv		BRL				30	
Bromomethane	BRL	0.500	ppbv		BRL				30	
Chloroethane	BRL	0.500	ppbv		BRL				30	
Trichlorofluoromethane (Freon 11)	3.87	0.500	ppbv		3.74			3.42	30	
1,1-Dichloroethene	BRL	0.500	ppbv		BRL				30	
Methylene chloride	BRL	0.500	ppbv		BRL				30	
1,1,2-Trichlorotrifluoroethane (Freon 113)	BRL	0.500	ppbv		BRL				30	
1,1-Dichloroethane	BRL	0.500	ppbv		BRL				30	
cis-1,2-Dichloroethene	BRL	0.500	ppbv		BRL				30	
Chloroform	BRL	0.500	ppbv		BRL				30	
1,2-Dichloroethane	BRL	0.500	ppbv		BRL				30	
1,1,1-Trichloroethane	BRL	0.500	ppbv		BRL				30	
Benzene	1.02	0.500	ppbv		0.990			2.99	30	
Carbon tetrachloride	BRL	0.500	ppbv		BRL				30	
1,2-Dichloropropane	BRL	0.500	ppbv		BRL				30	
Trichloroethene	BRL	0.500	ppbv		BRL				30	
cis-1,3-Dichloropropene	BRL	0.500	ppbv		BRL				30	
trans-1,3-Dichloropropene	BRL	0.500	ppbv		BRL				30	
1,1,2-Trichloroethane	BRL	0.500	ppbv		BRL				30	
Toluene	1.87	0.500	ppbv		1.82			2.71	30	
1,2-Dibromoethane (EDB)	BRL	0.500	ppbv		BRL				30	

Air Quality Analyses - Quality Control

Analyte(s)	Result	*RDL	Units	Spike Level	Source Result	%REC	%REC Limits	RPD	RPD Limit	Flag
Batch 4071072 - General Air Prep										
Duplicate (4071072-DUP1)		**Source: SA15332-01**		Prepared & Analyzed: 20-Jul-04						
Tetrachloroethene	1.58	0.500	ppbv		1.52			3.87	30	
Chlorobenzene	BRL	0.500	ppbv		BRL				30	
Ethylbenzene	BRL	0.500	ppbv		0.310				30	
m,p-Xylene	1.23	0.500	ppbv		1.20			2.47	30	
Styrene	0.480	0.500	ppbv		0.470			2.11	30	
o-Xylene	0.410	0.500	ppbv		0.390			5.00	30	
1,1,2,2-Tetrachloroethane	BRL	0.500	ppbv		BRL				30	
1,3,5-Trimethylbenzene	BRL	0.500	ppbv		BRL				30	
4-Ethyltoluene	BRL	0.500	ppbv		BRL				30	
1,2,4-Trimethylbenzene	0.510	0.500	ppbv		0.520			1.94	30	
1,3-Dichlorobenzene	BRL	0.500	ppbv		BRL				30	
Benzyl chloride	BRL	0.500	ppbv		BRL				30	
1,4-Dichlorobenzene	BRL	0.500	ppbv		BRL				30	
1,2-Dichlorobenzene	BRL	0.500	ppbv		BRL				30	
1,2,4-Trichlorobenzene	BRL	0.500	ppbv		BRL				30	
Hexachlorobutadiene	BRL	0.500	ppbv		BRL				30	
Surrogate: 4-Bromofluorobenzene	*12.6*		ppbv	*12.5*		*101*	*75-125*			

Notes and Definitions

QC-1 Analyte out of acceptance range.

BRL Below Reporting Limit - Analyte NOT DETECTED at or above the reporting limit

dry Sample results reported on a dry weight basis

NR Not Reported

RPD Relative Percent Difference

A plus sign (+) in the Method Reference column indicates the method is not accredited by NELAC.

Laboratory Control Sample (LCS): A known matrix spiked with compound(s) representative of the target analytes, which is used to document laboratory performance.

Matrix Duplicate: An intra-laboratory split sample which is used to document the precision of a method in a given sample matrix.

Matrix Spike: An aliquot of a sample spiked with a known concentration of target analyte(s). The spiking occurs prior to sample preparation and analysis. A matrix spike is used to document the bias of a method in a given sample matrix.

Method Blank: An analyte-free matrix to which all reagents are added in the same volumes or proportions as used in sample processing. The method blank should be carried through the complete sample preparation and analytical procedure. The method blank is used to document contamination resulting from the analytical process.

Method Detection Limit (MDL): The minimum concentration of a substance that can be measured and reported with 99% confidence that the analyte concentration is greater than zero and is determined from analysis of a sample in a given matrix type containing the analyte.

Reportable Detection Limit (RDL): The lowest concentration that can be reliably achieved within specified limits of precision and accuracy during routine laboratory operating conditions. The RDL is generally 5 to 10 times the MDL. However, it may be nominally chosen within these guidelines to simplify data reporting. For many analytes the RDL analyte concentration is selected as the lowest non-zero standard in the calibration curve. Sample RDLs are highly matrix-dependent.

Surrogate: An organic compound which is similar to the target analyte(s) in chemical composition and behavior in the analytical process, but which is not normally found in environmental samples. These compounds are spiked into all blanks, standards, and samples prior to analysis. Percent recoveries are calculated for each surrogate.

Validated by:
Hanibal C. Tayeh, Ph.D.
Dan DeAlmeida

SA15383

SPECTRUM ANALYTICAL, INC.
Featuring
HANIBAL TECHNOLOGY

CHAIN OF CUSTODY RECORD

Page 1 of 1

Special Handling:
☐ Standard TAT - 7 to 10 business days
☐ Rush TAT - Date Needed: _____
· All TATs subject to laboratory approval. Min. 24-hour notification needed for rushes.
· Samples disposed of after 60 days unless otherwise instructed.

Report To: ERM-New England, Inc
Two Hartford Square West Suite 300
146 Wyllys ST
Hartford, CT 06106
Project Mgr.: ~~[illegible]~~ Bob Drake

Invoice To: Same
WH 4002812

P.O. No.: _____ RQN: _____

Project No.: 0016718
Site Name: Intelidata
Location: New Milford State: CT
Sampler(s): J. Fernet

1=Na_2S2O_3 2=HCl 3=H_2SO_4 4=HNO_3 5=NaOH 6=Ascorbic Acid
7=CH_3OH 8= $NaHSO_4$ 9=_____ 10=_____

DW=Drinking Water GW=Groundwater WW=Wastewater
O=Oil SW= Surface Water SO=Soil SL=Sludge A=Air
X1=_____ X2=_____ X3=_____

G=Grab C=Composite

Lab Id:	Sample Id:	Date:	Time:	Type	Matrix	Preservative	# of VOA Vials	# of Amber Glass	# of Clear Glass	Containers: 8 hour regulator	Summa	Analyses: TO-14								QA Reporting Notes: (check if needed)
SA 15383-01	INDOOR	7/15/04	1600	C	A	-				X	X	X								

State specific reporting standards *If applicable, please list below.*

☐ Provide MCP CAM Report
Were all field QC requirements met as per MADEP CAM Section 2.0?
☐ Yes ☐ No
(Response required for CAM report)

☒ Fax results when available to (860) 524-5680
☐ E-mail to _____
EDD Format _____

Condition upon receipt: ☐ Iced ☐ Ambient ☐ °C 5 [illegible]

Relinquished by:	Received by:	Date:	Time:
[signature]	[signature]	7/19/04	12:30
Jeremy [signature]	Maria Mileck	7/19/04	13:15

SPECTRUM ANALYTICAL, INC.
Featuring
HANIBAL TECHNOLOGY

CHAIN OF CUSTODY RECORD

Page 1 of 1

Special Handling:
☐ Standard TAT - 7 to 10 business days
☐ Rush TAT - Date Needed: _____
· All TATs subject to laboratory approval. Min. 24-hour notification needed for rushes.
· Samples disposed of after 60 days unless otherwise instructed.

Report To: ERM-New England Inc
Two Hartford Square West Suite 300
146 Wallis St
Hartford CT 06106
Project Mgr.: Bob Drake

Invoice To: Same
P.O. No.: _____ RQN: _____

Project No.: 0016718
Site Name: Intelidata
Location: New Milford State: CT
Sampler(s): J Fernick

1=Na_2S2O_3 2=HCl 3=H_2SO_4 4=HNO_3 5=NaOH 6=Ascorbic Acid
7=CH_3OH 8= $NaHSO_4$ 9=_____ 10=_____

DW=Drinking Water GW=Groundwater WW=Wastewater
O=Oil SW= Surface Water SO=Soil SL=Sludge A=Air
X1=_____ X2=_____ X3=_____

G=Grab C=Composite

Lab Id:	Sample Id:	Date:	Time:	Type	Matrix	Preservative	# of VOA Vials	# of Amber Glass	# of Clear Glass	# of Plastic (8 hour regulator)	Summa	TO-14								QA Reporting Notes: (check if needed)
	INDOOR	7/15/04	1600	C	A	-				X	X	X								State specific reporting standards *If applicable, please list below.* ☐ Provide MCP CAM Report Were all field QC requirements met as per MADEP CAM Section 2.0? ☐ Yes ☐ No *(Response required for CAM report)*

☑ Fax results when available to (860) 324-5680
☐ E-mail to _____
EDD Format _____

Relinquished by:	Received by:	Date:	Time:
[signature] 7/15/04	[signature]	7/15/04	12:30

Condition upon receipt: ☐ Iced ☐ Ambient ☐ °C 5

11 Almgren Drive • Agawam, Massachusetts 01001 • 413-789-9018 • Fax 413-789-4076 • www.spectrum-analytical.com

Report Date:
28-Sep-04 12:05

SPECTRUM ANALYTICAL, INC.
Featuring
HANIBAL TECHNOLOGY

☐ Final Report
☐ Re-Issued Report
☑ Revised Report

Laboratory Report

Environmental Resources Management
146 Wyllys Street, Suite 300
Hartford, CT 06106
Attn: Robert Drake

Project: Intelidata - New Milford, CT
Project #: 0016718

Laboratory ID	Client Sample ID	Container	Matrix	Date Sampled	Date Received
SA15279-01	SVE-1	Summa canister	Air	14-Jul-04 11:45	15-Jul-04 13:05
SA15279-02	SVE-2	Summa canister	Air	14-Jul-04 11:50	15-Jul-04 13:05

I attest that the information contained within the report has been reviewed for accuracy and checked against the quality control requirements for each method. All applicable NELAC requirements have been met.
Please note that this report contains 5 pages of analytical data plus Chain of Custody document(s).
This report may not be reproduced, except in full, without written approval from Spectrum Analytical, Inc.

Massachusetts Certification # M-MA138/MA1110
Connecticut # PH-0777
Florida # E87600/E87936
Maine # MA138
New Hampshire # 2538
New York # 11393/11840
Rhode Island # 98
USDA # S-51435

ACCREDITED IN ACCORDANCE WITH nelac

Authorized by:

Hanibal C. Tayeh, Ph.D.
President/Laboratory Director

Spectrum Analytical, Inc. is a NELAC accredited laboratory organization and meets NELAC testing standards. Use of the NELAC logo however does not insure that Spectrum is currently accredited for the specific method indicated. Please refer to our "Quality" webpage at www.spectrum-analytical.com for a full listing of our current certifications.

Sample Identification	Client Project #	Matrix	Collection Date/Time	Received
SVE-1 SA15279-01	0016718	Air	14-Jul-04 11:45	15-Jul-04

Analyte(s)	*Result*	*Units*	**RDL*	*Result ug/m³*	**RDL*	*Method Ref.*	*Analyzed*	*Batch*	*Analyst*	*Flag*
Air Quality Analyses										
Chlorinated VOCs by EPA TO-14		*ppbv*								
Chloromethane	BRL		129	BRL	266.44	Mod. EPA TO-14A	16-Jul-04	4070827	DG	
Vinyl chloride	BRL		129	BRL	329.75	"	"	"	"	
Chloroethane	BRL		129	BRL	340.31	"	"	"	"	
1,1-Dichloroethene	155		129	614.93	511.78	"	"	"	"	
Methylene chloride	BRL		129	BRL	447.94	"	"	"	"	
1,1-Dichloroethane	139		129	562.82	522.33	"	"	"	"	
cis-1,2-Dichloroethene	BRL		129	BRL	511.52	"	"	"	"	
Chloroform	BRL		129	BRL	627.85	"	"	"	"	
1,2-Dichloroethane	BRL		129	BRL	522.33	"	"	"	"	
1,1,1-Trichloroethane	15900		129	86,750.92	703.83	"	"	"	"	
Carbon tetrachloride	BRL		129	BRL	811.46	"	"	"	"	
1,2-Dichloropropane	BRL		129	BRL	596.20	"	"	"	"	
Trichloroethene	537		129	2,885.96	693.28	"	"	"	"	
cis-1,3-Dichloropropene	BRL		129	BRL	585.64	"	"	"	"	
trans-1,3-Dichloropropene	BRL		129	BRL	585.64	"	"	"	"	
1,1,2-Trichloroethane	BRL		129	BRL	703.83	"	"	"	"	
Tetrachloroethene	555		129	3,763.56	874.77	"	"	"	"	
Chlorobenzene	BRL		129	BRL	594.09	"	"	"	"	
1,1,2,2-Tetrachloroethane	BRL		129	BRL	885.85	"	"	"	"	
1,3-Dichlorobenzene	BRL		129	BRL	775.58	"	"	"	"	
1,4-Dichlorobenzene	BRL		129	BRL	775.58	"	"	"	"	
1,2-Dichlorobenzene	BRL		129	BRL	775.58	"	"	"	"	
Hexachlorobutadiene	BRL		129	BRL	1,375.47	"	"	"	"	
Surrogate: 4-Bromofluorobenzene	*91.2*		*75-125 %*			"	"	"	"	

This laboratory report is not valid without an authorized signature on the cover page.

*Reportable Detection Limit BRL = Below Reporting Limit

Sample Identification	Client Project #	Matrix	Collection Date/Time	Received
SVE-2 SA15279-02	0016718	Air	14-Jul-04 11:50	15-Jul-04

Analyte(s)	*Result Units*	**RDL*	*Result ug/m³*	**RDL*	*Method Ref.*	*Analyzed*	*Batch*	*Analyst*	*Flag*
Air Quality Analyses									
Chlorinated VOCs by EPA TO-14	*ppbv*								
Chloromethane	BRL	4.00	BRL	8.26	Mod. EPA TO-14A	16-Jul-04	4070827	DG	
Vinyl chloride	BRL	4.00	BRL	10.22	"	"	"	"	
Chloroethane	BRL	4.00	BRL	10.55	"	"	"	"	
1,1-Dichloroethene	6.96	4.00	27.61	15.87	"	"	"	"	
Methylene chloride	5.52	4.00	19.17	13.89	"	"	"	"	
1,1-Dichloroethane	BRL	4.00	BRL	16.20	"	"	"	"	
cis-1,2-Dichloroethene	BRL	4.00	BRL	15.86	"	"	"	"	
Chloroform	BRL	4.00	BRL	19.47	"	"	"	"	
1,2-Dichloroethane	BRL	4.00	BRL	16.20	"	"	"	"	
1,1,1-Trichloroethane	480	4.00	2,618.90	21.82	"	"	"	"	
Carbon tetrachloride	BRL	4.00	BRL	25.16	"	"	"	"	
1,2-Dichloropropane	BRL	4.00	BRL	18.49	"	"	"	"	
Trichloroethene	51.3	4.00	275.70	21.50	"	"	"	"	
cis-1,3-Dichloropropene	BRL	4.00	BRL	18.16	"	"	"	"	
trans-1,3-Dichloropropene	BRL	4.00	BRL	18.16	"	"	"	"	
1,1,2-Trichloroethane	BRL	4.00	BRL	21.82	"	"	"	"	
Tetrachloroethene	6.32	4.00	42.86	27.12	"	"	"	"	
Chlorobenzene	BRL	4.00	BRL	18.42	"	"	"	"	
1,1,2,2-Tetrachloroethane	BRL	4.00	BRL	27.47	"	"	"	"	
1,3-Dichlorobenzene	BRL	4.00	BRL	24.05	"	"	"	"	
1,4-Dichlorobenzene	BRL	4.00	BRL	24.05	"	"	"	"	
1,2-Dichlorobenzene	BRL	4.00	BRL	24.05	"	"	"	"	
Hexachlorobutadiene	BRL	4.00	BRL	42.65	"	"	"	"	
Surrogate: 4-Bromofluorobenzene	*90.4*	*75-125 %*			"	"	"	"	

Air Quality Analyses - Quality Control

Analyte(s)	Result	*RDL	Units	Spike Level	Source Result	%REC	%REC Limits	RPD	RPD Limit	Flag
Batch 4070827 - General Air Prep										
Blank (4070827-BLK1)				Prepared & Analyzed: 15-Jul-04						
Chloromethane	BRL	0.500	ppbv							
Vinyl chloride	BRL	0.500	ppbv							
Chloroethane	BRL	0.500	ppbv							
1,1-Dichloroethene	BRL	0.500	ppbv							
Methylene chloride	BRL	0.500	ppbv							
1,1-Dichloroethane	BRL	0.500	ppbv							
cis-1,2-Dichloroethene	BRL	0.500	ppbv							
Chloroform	BRL	0.500	ppbv							
1,2-Dichloroethane	BRL	0.500	ppbv							
1,1,1-Trichloroethane	BRL	0.500	ppbv							
Carbon tetrachloride	BRL	0.500	ppbv							
1,2-Dichloropropane	BRL	0.500	ppbv							
Trichloroethene	BRL	0.500	ppbv							
cis-1,3-Dichloropropene	BRL	0.500	ppbv							
trans-1,3-Dichloropropene	BRL	0.500	ppbv							
1,1,2-Trichloroethane	BRL	0.500	ppbv							
Tetrachloroethene	BRL	0.500	ppbv							
Chlorobenzene	BRL	0.500	ppbv							
1,1,2,2-Tetrachloroethane	BRL	0.500	ppbv							
1,3-Dichlorobenzene	BRL	0.500	ppbv							
1,4-Dichlorobenzene	BRL	0.500	ppbv							
1,2-Dichlorobenzene	BRL	0.500	ppbv							
Hexachlorobutadiene	BRL	0.500	ppbv							
Surrogate: 4-Bromofluorobenzene	*11.8*		ppbv	*12.5*		*94.4*	*75-125*			
LCS (4070827-BS1)				Prepared & Analyzed: 15-Jul-04						
Chloromethane	7.89		ppbv	10.0		78.9	70-130			
Vinyl chloride	9.39		ppbv	10.0		93.9	70-130			
Chloroethane	11.4		ppbv	10.0		114	70-130			
1,1-Dichloroethene	8.85		ppbv	10.0		88.5	70-130			
Methylene chloride	9.20		ppbv	10.0		92.0	70-130			
1,1-Dichloroethane	9.38		ppbv	10.0		93.8	70-130			
cis-1,2-Dichloroethene	9.43		ppbv	10.0		94.3	70-130			
Chloroform	9.56		ppbv	10.0		95.6	70-130			
1,2-Dichloroethane	9.52		ppbv	10.0		95.2	70-130			
1,1,1-Trichloroethane	10.2		ppbv	10.0		102	70-130			
Carbon tetrachloride	9.88		ppbv	10.0		98.8	70-130			
1,2-Dichloropropane	9.74		ppbv	10.0		97.4	70-130			
Trichloroethene	10.2		ppbv	10.0		102	70-130			
cis-1,3-Dichloropropene	9.91		ppbv	10.0		99.1	70-130			
trans-1,3-Dichloropropene	8.82		ppbv	10.0		88.2	70-130			
1,1,2-Trichloroethane	9.37		ppbv	10.0		93.7	70-130			
Tetrachloroethene	9.25		ppbv	10.0		92.5	70-130			
Chlorobenzene	10.7		ppbv	10.0		107	70-130			
1,1,2,2-Tetrachloroethane	10.9		ppbv	10.0		109	70-130			
1,3-Dichlorobenzene	11.1		ppbv	10.0		111	70-130			
1,4-Dichlorobenzene	11.1		ppbv	10.0		111	70-130			
1,2-Dichlorobenzene	10.7		ppbv	10.0		107	70-130			
Hexachlorobutadiene	10.2		ppbv	10.0		102	70-130			
Surrogate: 4-Bromofluorobenzene	*12.8*		ppbv	*12.5*		*102*	*75-125*			

Notes and Definitions

BRL	Below Reporting Limit - Analyte NOT DETECTED at or above the reporting limit
dry	Sample results reported on a dry weight basis
NR	Not Reported
RPD	Relative Percent Difference

A plus sign (+) in the Method Reference column indicates the method is not accredited by NELAC.

Laboratory Control Sample (LCS): A known matrix spiked with compound(s) representative of the target analytes, which is used to document laboratory performance.

Matrix Duplicate: An intra-laboratory split sample which is used to document the precision of a method in a given sample matrix.

Matrix Spike: An aliquot of a sample spiked with a known concentration of target analyte(s). The spiking occurs prior to sample preparation and analysis. A matrix spike is used to document the bias of a method in a given sample matrix.

Method Blank: An analyte-free matrix to which all reagents are added in the same volumes or proportions as used in sample processing. The method blank should be carried through the complete sample preparation and analytical procedure. The method blank is used to document contamination resulting from the analytical process.

Method Detection Limit (MDL): The minimum concentration of a substance that can be measured and reported with 99% confidence that the analyte concentration is greater than zero and is determined from analysis of a sample in a given matrix type containing the analyte.

Reportable Detection Limit (RDL): The lowest concentration that can be reliably achieved within specified limits of precision and accuracy during routine laboratory operating conditions. For many analytes the RDL analyte concentration is selected as the lowest non-zero standard in the calibration curve. While the RDL is approximately 5 to 10 times the MDL, the RDL for each sample takes into account the sample volume/weight, extract/digestate volume, cleanup procedures and, if applicable, dry weight correction. Sample RDLs are highly matrix-dependent.

Surrogate: An organic compound which is similar to the target analyte(s) in chemical composition and behavior in the analytical process, but which is not normally found in environmental samples. These compounds are spiked into all blanks, standards, and samples prior to analysis. Percent recoveries are calculated for each surrogate.

Validated by:
Hanibal C. Tayeh, Ph.D.
Nicole Brown

SA 15279 (m)

SPECTRUM ANALYTICAL, INC.
Featuring
HANIBAL TECHNOLOGY

CHAIN OF CUSTODY RECORD

Page 1 of 1

Special Handling:
☐ Standard TAT - 7 to 10 business days
☒ Rush TAT - Date Needed: 7-19-04
· All TATs subject to laboratory approval. Min. 24-hour notification needed for rushes.
· Samples disposed of after 60 days unless otherwise instructed.

Report To: ERM-New England Inc
two Hartford Sq. West, Suite 300
Hartford, CT

Project Mgr.: Bob Drake

Invoice To: WH4002183 (OK)
SAME

P.O. No.: RQN:

Project No.: 0016718
Site Name: intelidata
Location: New Milford State: CT
Sampler(s): CA JFenet

1=Na_2S2O_3 2=HCl 3=H_2SO_4 4=HNO_3 5=NaOH 6=Ascorbic Acid
7=CH_3OH 8= $NaHSO_4$ 9=____ 10=____

DW=Drinking Water GW=Groundwater WW=Wastewater
O=Oil SW= Surface Water SO=Soil SL=Sludge A=Air
X1=____ X2=____ X3=____

G=Grab C=Composite

Lab Id:	Sample Id:	Date:	Time:	Type	Matrix	Preservative	# of VOA Vials	# of Amber Glass	# of Clear Glass	# of Plastic	Summa canister	TO14 CVOCs							
SA15279-01	SVE-1 J.F.	~~7-12-04~~ 7-14-04	1145	G	A	–					1	✓							
↓ 02	SVE-2	~~7-12-04~~ 7-14-04	1150	G	A	–					1	✓							
	added	9/23/04 by J Fenet																	

QA Reporting Notes:
(check if needed)

State specific reporting standards
If applicable, please list below.

☐ Provide MCP CAM Report
Were all field QC requirements met as per MADEP CAM Section 2.0?
☐ Yes ☐ No
(Response required for CAM report)

☒ Fax results when available to (860) 524-5680
☐ E-mail to ____
EDD Format ____

Condition upon receipt: ☐ Iced ☐ Ambient ☐°C 23

Relinquished by:	Received by:	Date:	Time:
Connie Ann	[signature]	7/15/04	11:P
[signature]	[signature]	7/15/04	105

Counter

11 Almgren Drive • Agawam, Massachusetts 01001 • 413-789-9018 • Fax 413-789-4076 • www.spectrum-analytical.com

SA 15279 (m)

SPECTRUM ANALYTICAL, INC.
Featuring
HANIBAL TECHNOLOGY

CHAIN OF CUSTODY RECORD

Page 1 of 1

Special Handling:
- ☐ Standard TAT - 7 to 10 business days
- ☒ Rush TAT - Date Needed: 7-19-04
- All TATs subject to laboratory approval. Min. 24-hour notification needed for rushes.
- Samples disposed of after 60 days unless otherwise instructed.

Report To: ERM-New England Inc
two Hartford Sq. West, Suite 300
Hartford, CT

Project Mgr.: Bob Drake

Invoice To: IWH4002183 (OH)
SAME

P.O. No.: RQN:

Project No.: 0016718
Site Name: intelidata
Location: New Milford State: CT
Sampler(s): CA JFeret

1=$Na_2S_2O_3$ 2=HCl 3=H_2SO_4 4=HNO_3 5=NaOH 6=Ascorbic Acid
7=CH_3OH 8= $NaHSO_4$ 9=____ 10=____

DW=Drinking Water GW=Groundwater WW=Wastewater
O=Oil SW= Surface Water SO=Soil SL=Sludge A=Air
X1=____ X2=____ X3=____

G=Grab C=Composite

Lab Id:	Sample Id:	Date:	Time:	Type	Matrix	Preservative	# of VOA Vials	# of Amber Glass	# of Clear Glass	# of Plastic	Summa canister	TO14 CVOCs							
SA15279-01	SVE-1	7-12-04	1145	G	A	–					1	✓							
↓ 02	SVE	7-12-04	1150	G	A	–					1	✓							

QA Reporting Notes: (check if needed)

State specific reporting standards
If applicable, please list below.

☐ Provide MCP CAM Report
Were all field QC requirements met as per MADEP CAM Section 2.0?
☐ Yes ☐ No
(Response required for CAM report)

☒ Fax results when available to (860) 524-5680
☐ E-mail to ____
EDD Format ____

Condition upon receipt: ☐ Iced ☐ Ambient ☐ °C 23

Relinquished by:	Received by:	Date:	Time:
[signature]	[signature]	7/15/04	11:P
[signature]	[signature]	7/15/04	105

COUNTER

11 Almgren Drive • Agawam, Massachusetts 01001 • 413-789-9018 • Fax 413-789-4076 • www.spectrum-analytical.com

SPECTRUM ANALYTICAL, INC.
Featuring
HANIBAL TECHNOLOGY

CHAIN OF CUSTODY RECORD

Page 1 of 1

Special Handling:
- ☐ Standard TAT - 7 to 10 business days
- ☑ Rush TAT - Date Needed: 7-[illegible]
- All TATs subject to laboratory approval. Min. 24-hour notification needed for rushes.
- Samples disposed of after 60 days unless otherwise instructed.

Report To: ERM New England Inc.
[illegible] Hartford [illegible] West Suite 300
Hartford CT [illegible]

Project Mgr.: [illegible]

Invoice To: SAME

P.O. No.: RQN:

Project No.: [illegible]
Site Name: [illegible]
Location: [illegible] State: CT
Sampler(s): [illegible]

1=Na_2S2O_3 2=HCl 3=H_2SO_4 4=HNO_3 5=NaOH 6=Ascorbic Acid
7=CH_3OH 8= $NaHSO_4$ 9=____ 10=____

DW=Drinking Water GW=Groundwater WW=Wastewater
O=Oil SW= Surface Water SO=Soil SL=Sludge A=Air
X1=____ X2=____ X3=____

G=Grab C=Composite

Lab Id:	Sample Id:	Date:	Time:	Type	Matrix	Preservative	# of VOA Vials	# of Amber Glass	# of Clear Glass	# of Plastic	[illegible]	TPH	[illegible]							QA Reporting Notes: (check if needed)
	SVE-1	7-12-04	1520	G	A	–					1	✓								
	SVE-2	7-12-04	1525	G	A	–					1	✓								
	effluent	7-12-04	1530	G	A	–					1	✓								

State specific reporting standards
If applicable, please list below.

☐ Provide MCP CAM Report
Were all field QC requirements met as per MADEP CAM Section 2.0?
☐ Yes ☐ No
(Response required for CAM report)

☑ Fax results when available to ([illegible]) [illegible]
☐ E-mail to ____
EDD Format ____

Condition upon receipt: ☐ Iced ☐ Ambient ☐ °C ____

Relinquished by:	Received by:	Date:	Time:
[illegible]	[illegible]	7/14/04	10:06

11 Almgren Drive • Agawam, Massachusetts 01001 • 413-789-9018 • Fax 413-789-4076 • www.spectrum-analytical.com

Report Date:
23-Jul-04 14:11

SPECTRUM ANALYTICAL, INC.
Featuring
HANIBAL TECHNOLOGY

☑ Final Report
☐ Re-Issued Report
☐ Revised Report

Laboratory Report

Environmental Resources Management
146 Wyllys Street, Suite 300
Hartford, CT 06106
Attn: Robert Drake

Project:Intelidata - New Milford, CT
Project #:0016718

Laboratory ID	Client Sample ID	Matrix	Date Sampled	Date Received
SA15505-01	ASW-1	Ground Water	20-Jul-04 08:00	21-Jul-04 15:40

I attest that the information contained within the report has been reviewed for accuracy and checked against the quality control requirements for each method. All applicable NELAC requirements have been met.
Please note that this report contains 5 pages of analytical data plus Chain of Custody document(s).
This report may not be reproduced, except in full, without written approval from Spectrum Analytical, Inc.

Massachusetts Certification # M-MA138/MA1110
Connecticut # PH-0777
Florida # E87600/E87936
Maine # MA138
New Hampshire # 2538
New York # 11393/11840
Rhode Island # 98

ACCREDITED IN ACCORDANCE WITH nelac

Authorized by:

Hanibal C. Tayeh, Ph.D.
President/Laboratory Director

Spectrum Analytical, Inc. is a NELAC accredited laboratory organization and meets NELAC testing standards. Use of the NELAC logo however does not insure that Spectrum is currently accredited for the specific method indicated. Please refer to our "Quality" webpage at www.spectrum-analytical.com for a full listing of our current certifications.

Sample Identification	Client Project #	Matrix	Collection Date/Time	Received
ASW-1 SA15505-01	0016718	Ground Water	20-Jul-04 08:00	21-Jul-04

Analyte(s)	*Result*	**RDL/Units*	*Dilution*	*Method Ref.*	*Prepared*	*Analyzed*	*Batch*	*Analyst*	*Flag*
Volatile Organic Compounds									
Volatile Organic Halocarbons by SW846 8260B		Prepared by method Volatiles							
Bromodichloromethane	BRL	50.0 ug/l	50	SW 846 8260B	22-Jul-04	22-Jul-04	4071159	RLJ	
Bromoform	BRL	50.0 ug/l	50	"	"	"	"	"	
Bromomethane	BRL	100 ug/l	50	"	"	"	"	"	
Carbon tetrachloride	BRL	50.0 ug/l	50	"	"	"	"	"	
Chlorobenzene	BRL	50.0 ug/l	50	"	"	"	"	"	
Chloroethane	BRL	100 ug/l	50	"	"	"	"	"	
Chloroform	BRL	50.0 ug/l	50	"	"	"	"	"	
Chloromethane	BRL	100 ug/l	50	"	"	"	"	"	
Dibromochloromethane	BRL	50.0 ug/l	50	"	"	"	"	"	
1,2-Dichlorobenzene	BRL	50.0 ug/l	50	"	"	"	"	"	
1,3-Dichlorobenzene	BRL	50.0 ug/l	50	"	"	"	"	"	
1,4-Dichlorobenzene	BRL	50.0 ug/l	50	"	"	"	"	"	
Dichlorodifluoromethane (Freon12)	BRL	100 ug/l	50	"	"	"	"	"	
1,1-Dichloroethane	106	50.0 ug/l	50	"	"	"	"	"	
1,2-Dichloroethane	BRL	50.0 ug/l	50	"	"	"	"	"	
1,1-Dichloroethene	148	50.0 ug/l	50	"	"	"	"	"	
cis-1,2-Dichloroethene	58.5	50.0 ug/l	50	"	"	"	"	"	
trans-1,2-Dichloroethene	BRL	50.0 ug/l	50	"	"	"	"	"	
1,2-Dichloropropane	BRL	50.0 ug/l	50	"	"	"	"	"	
cis-1,3-Dichloropropene	BRL	50.0 ug/l	50	"	"	"	"	"	
trans-1,3-Dichloropropene	BRL	50.0 ug/l	50	"	"	"	"	"	
Methylene chloride	BRL	500 ug/l	50	"	"	"	"	"	
1,1,2,2-Tetrachloroethane	BRL	50.0 ug/l	50	"	"	"	"	"	
Tetrachloroethene	BRL	50.0 ug/l	50	"	"	"	"	"	
1,1,1-Trichloroethane	5,410	50.0 ug/l	50	"	"	"	"	"	
1,1,2-Trichloroethane	BRL	50.0 ug/l	50	"	"	"	"	"	
Trichloroethene	136	50.0 ug/l	50	"	"	"	"	"	
Trichlorofluoromethane (Freon 11)	BRL	50.0 ug/l	50	"	"	"	"	"	
Vinyl chloride	BRL	50.0 ug/l	50	"	"	"	"	"	
Surrogate: 4-Bromofluorobenzene	*95.0*	*70-130 %*		"	"	"	"	"	
Surrogate: Toluene-d8	*97.2*	*70-130 %*		"	"	"	"	"	
Surrogate: 1,2-Dichloroethane-d4	*121*	*70-130 %*		"	"	"	"	"	
Surrogate: Dibromofluoromethane	*114*	*70-130 %*		"	"	"	"	"	

This laboratory report is not valid without an authorized signature on the cover page.

*Reportable Detection Limit BRL = Below Reporting Limit

Volatile Organic Compounds - Quality Control

Analyte(s)	Result	*RDL	Units	Spike Level	Source Result	%REC	%REC Limits	RPD	RPD Limit	Flag
Batch 4071159 - Volatiles										
Blank (4071159-BLK1)				Prepared & Analyzed: 22-Jul-04						
Bromodichloromethane	BRL	1.0	ug/l							
Bromoform	BRL	1.0	ug/l							
Bromomethane	BRL	2.0	ug/l							
Carbon tetrachloride	BRL	1.0	ug/l							
Chlorobenzene	BRL	1.0	ug/l							
Chloroethane	BRL	2.0	ug/l							
Chloroform	BRL	1.0	ug/l							
Chloromethane	BRL	2.0	ug/l							
Dibromochloromethane	BRL	1.0	ug/l							
1,2-Dichlorobenzene	BRL	1.0	ug/l							
1,3-Dichlorobenzene	BRL	1.0	ug/l							
1,4-Dichlorobenzene	BRL	1.0	ug/l							
Dichlorodifluoromethane (Freon12)	BRL	2.0	ug/l							
1,1-Dichloroethane	BRL	1.0	ug/l							
1,2-Dichloroethane	BRL	1.0	ug/l							
1,1-Dichloroethene	BRL	1.0	ug/l							
cis-1,2-Dichloroethene	BRL	1.0	ug/l							
trans-1,2-Dichloroethene	BRL	1.0	ug/l							
1,2-Dichloropropane	BRL	1.0	ug/l							
cis-1,3-Dichloropropene	BRL	1.0	ug/l							
trans-1,3-Dichloropropene	BRL	1.0	ug/l							
Methylene chloride	BRL	10.0	ug/l							
1,1,2,2-Tetrachloroethane	BRL	1.0	ug/l							
Tetrachloroethene	BRL	1.0	ug/l							
1,1,1-Trichloroethane	BRL	1.0	ug/l							
1,1,2-Trichloroethane	BRL	1.0	ug/l							
Trichloroethene	BRL	1.0	ug/l							
Trichlorofluoromethane (Freon 11)	BRL	1.0	ug/l							
Vinyl chloride	BRL	1.0	ug/l							
Surrogate: 4-Bromofluorobenzene	*46.5*		ug/l	*50.0*		*93.0*	*70-130*			
Surrogate: Toluene-d8	*51.4*		ug/l	*50.0*		*103*	*70-130*			
Surrogate: 1,2-Dichloroethane-d4	*53.7*		ug/l	*50.0*		*107*	*70-130*			
Surrogate: Dibromofluoromethane	*56.6*		ug/l	*50.0*		*113*	*70-130*			
LCS Dup (4071159-BSD1)				Prepared & Analyzed: 22-Jul-04						
Bromodichloromethane	20.1		ug/l	20.0		100	70-130	3.56	25	
Bromoform	19.7		ug/l	20.0		98.5	70-130	7.92	25	
Bromomethane	17.4		ug/l	20.0		87.0	70-130	0.00	50	
Carbon tetrachloride	22.0		ug/l	20.0		110	70-130	3.70	25	
Chlorobenzene	18.7		ug/l	20.0		93.5	70-130	6.63	25	
Chloroethane	20.5		ug/l	20.0		102	70-130	1.98	50	
Chloroform	19.8		ug/l	20.0		99.0	70-130	4.12	25	
Chloromethane	18.0		ug/l	20.0		90.0	70-130	2.25	25	
Dibromochloromethane	20.4		ug/l	20.0		102	70-130	4.51	50	
1,2-Dichlorobenzene	19.7		ug/l	20.0		98.5	70-130	3.09	25	
1,3-Dichlorobenzene	19.3		ug/l	20.0		96.5	70-130	5.87	25	
1,4-Dichlorobenzene	20.2		ug/l	20.0		101	70-130	4.04	25	
1,1-Dichloroethane	19.8		ug/l	20.0		99.0	70-130	3.08	25	
1,2-Dichloroethane	20.2		ug/l	20.0		101	70-130	4.04	25	
1,1-Dichloroethene	20.8		ug/l	20.0		104	70-130	1.94	25	
cis-1,2-Dichloroethene	20.7		ug/l	20.0		104	70-130	5.43	25	
trans-1,2-Dichloroethene	20.5		ug/l	20.0		102	70-130	1.98	25	
1,2-Dichloropropane	18.4		ug/l	20.0		92.0	70-130	5.01	25	
cis-1,3-Dichloropropene	18.3		ug/l	20.0		91.5	70-130	4.47	25	
trans-1,3-Dichloropropene	19.6		ug/l	20.0		98.0	70-130	4.17	25	

This laboratory report is not valid without an authorized signature on the cover page.

*Reportable Detection Limit BRL = Below Reporting Limit

Volatile Organic Compounds - Quality Control

Analyte(s)	Result	*RDL	Units	Spike Level	Source Result	%REC	%REC Limits	RPD	RPD Limit	Flag
Batch 4071159 - Volatiles										
LCS Dup (4071159-BSD1)				Prepared & Analyzed: 22-Jul-04						
Methylene chloride	20.1		ug/l	20.0		100	70-130	0.501	25	
1,1,2,2-Tetrachloroethane	19.4		ug/l	20.0		97.0	70-130	8.60	25	
Tetrachloroethene	19.3		ug/l	20.0		96.5	70-130	4.23	25	
1,1,1-Trichloroethane	20.9		ug/l	20.0		104	70-130	4.42	25	
1,1,2-Trichloroethane	19.2		ug/l	20.0		96.0	70-130	7.57	25	
Trichloroethene	18.7		ug/l	20.0		93.5	70-130	3.26	25	
Trichlorofluoromethane (Freon 11)	22.6		ug/l	20.0		113	70-130	1.79	50	
Vinyl chloride	23.4		ug/l	20.0		117	70-130	2.53	25	
Surrogate: 4-Bromofluorobenzene	*46.9*		ug/l	*50.0*		*93.8*	*70-130*			
Surrogate: Toluene-d8	*48.2*		ug/l	*50.0*		*96.4*	*70-130*			
Surrogate: 1,2-Dichloroethane-d4	*51.6*		ug/l	*50.0*		*103*	*70-130*			
Surrogate: Dibromofluoromethane	*52.4*		ug/l	*50.0*		*105*	*70-130*			
Matrix Spike (4071159-MS1)		**Source: SA15458-01**		Prepared & Analyzed: 22-Jul-04						
Chlorobenzene	17.5		ug/l	20.0	0.500	85.0	70-130			
1,1-Dichloroethene	20.5		ug/l	20.0	BRL	102	70-130			
Trichloroethene	17.7		ug/l	20.0	BRL	88.5	70-130			
Surrogate: 4-Bromofluorobenzene	*47.2*		ug/l	*50.0*		*94.4*	*70-130*			
Surrogate: Toluene-d8	*49.3*		ug/l	*50.0*		*98.6*	*70-130*			
Surrogate: 1,2-Dichloroethane-d4	*55.4*		ug/l	*50.0*		*111*	*70-130*			
Surrogate: Dibromofluoromethane	*54.0*		ug/l	*50.0*		*108*	*70-130*			
Matrix Spike Dup (4071159-MSD1)		**Source: SA15458-01**		Prepared & Analyzed: 22-Jul-04						
Chlorobenzene	18.5		ug/l	20.0	0.500	90.0	70-130	5.71	30	
1,1-Dichloroethene	20.8		ug/l	20.0	BRL	104	70-130	1.94	30	
Trichloroethene	19.1		ug/l	20.0	BRL	95.5	70-130	7.61	30	
Surrogate: 4-Bromofluorobenzene	*47.2*		ug/l	*50.0*		*94.4*	*70-130*			
Surrogate: Toluene-d8	*50.1*		ug/l	*50.0*		*100*	*70-130*			
Surrogate: 1,2-Dichloroethane-d4	*56.8*		ug/l	*50.0*		*114*	*70-130*			
Surrogate: Dibromofluoromethane	*55.6*		ug/l	*50.0*		*111*	*70-130*			

Notes and Definitions

BRL	Below Reporting Limit - Analyte NOT DETECTED at or above the reporting limit
dry	Sample results reported on a dry weight basis
NR	Not Reported
RPD	Relative Percent Difference

A plus sign (+) in the Method Reference column indicates the method is not accredited by NELAC.

Laboratory Control Sample (LCS): A known matrix spiked with compound(s) representative of the target analytes, which is used to document laboratory performance.

Matrix Duplicate: An intra-laboratory split sample which is used to document the precision of a method in a given sample matrix.

Matrix Spike: An aliquot of a sample spiked with a known concentration of target analyte(s). The spiking occurs prior to sample preparation and analysis. A matrix spike is used to document the bias of a method in a given sample matrix.

Method Blank: An analyte-free matrix to which all reagents are added in the same volumes or proportions as used in sample processing. The method blank should be carried through the complete sample preparation and analytical procedure. The method blank is used to document contamination resulting from the analytical process.

Method Detection Limit (MDL): The minimum concentration of a substance that can be measured and reported with 99% confidence that the analyte concentration is greater than zero and is determined from analysis of a sample in a given matrix type containing the analyte.

Reportable Detection Limit (RDL): The lowest concentration that can be reliably achieved within specified limits of precision and accuracy during routine laboratory operating conditions. The RDL is generally 5 to 10 times the MDL. However, it may be nominally chosen within these guidelines to simplify data reporting. For many analytes the RDL analyte concentration is selected as the lowest non-zero standard in the calibration curve. Sample RDLs are highly matrix-dependent.

Surrogate: An organic compound which is similar to the target analyte(s) in chemical composition and behavior in the analytical process, but which is not normally found in environmental samples. These compounds are spiked into all blanks, standards, and samples prior to analysis. Percent recoveries are calculated for each surrogate.

Validated by:
Hanibal C. Tayeh, Ph.D.
Dan DeAlmeida

SA15505 MM

SPECTRUM ANALYTICAL, INC.
Featuring
HANIBAL TECHNOLOGY

CHAIN OF CUSTODY RECORD

Page 1 of 1

Special Handling:
☐ Standard TAT - 7 to 10 business days
☒ Rush TAT - Date Needed: 7/23/04
· All TATs subject to laboratory approval. Min. 24-hour notification needed for rushes.
· Samples disposed of after 60 days unless otherwise instructed.

Report To: ERM-New England, Inc
Two Hartford Square West, Suite 300
146 Wyllys St.
Hartford, CT 06106
Project Mgr.: Bob Druce

Invoice To: Same
IW#40024603 (OK)
P.O. No.: RQN:

Project No.: 0016718
Site Name: Intelidata
Location: New Milford State: CT
Sampler(s): J. Fernet

1=Na_2S2O_3 2=HCl 3=H_2SO_4 4=HNO_3 5=NaOH 6=Ascorbic Acid
7=CH_3OH 8= $NaHSO_4$ 9=____ 10=____

DW=Drinking Water GW=Groundwater WW=Wastewater
O=Oil SW= Surface Water SO=Soil SL=Sludge A=Air
X1=____ X2=____ X3=____

G=Grab C=Composite

Lab Id:	Sample Id:	Date:	Time:	Type	Matrix	Preservative	Containers: # of VOA Vials	# of Amber Glass	# of Clear Glass	# of Plastic		Analyses: 8260 Cuts only								QA Reporting Notes: (check if needed)
SA15505-01	ASW-1	7/20/04	0800	G	GW	2	2					X								

State specific reporting standards
If applicable, please list below.

☐ Provide MCP CAM Report
Were all field QC requirements met as per MADEP CAM Section 2.0?
☐ Yes ☐ No
(Response required for CAM report)

☒ Fax results when available to (860) 524-5680
☐ E-mail to
EDD Format

Condition upon receipt: ☐ Iced ☐ Ambient ☐ °C 2C

Relinquished by:	Received by:	Date:	Time:
[signature]	[signature]	7/21/04	1:20
[signature]	[signature]	7/21/04	340

11 Almgren Drive • Agawam, Massachusetts 01001 • 413-789-9018 • Fax 413-789-4076 • www.spectrum-analytical.com

Refrig

SPECTRUM ANALYTICAL, INC.
Featuring
HANIBAL TECHNOLOGY

CHAIN OF CUSTODY RECORD

Page 1 of 1

Special Handling:
- ☐ Standard TAT - 7 to 10 business days
- ☒ Rush TAT - Date Needed: [illegible]
- All TATs subject to laboratory approval. Min. 24-hour notification needed for rushes.
- Samples disposed of after 60 days unless otherwise instructed.

Report To: [illegible]
[illegible]
[illegible] CT

Project Mgr.: [illegible]

Invoice To: SAME

P.O. No.: _____ RQN: _____

Project No.: [illegible]
Site Name: [illegible]
Location: New Milford State: CT
Sampler(s): [illegible]

1=Na_2S2O_3 2=HCl 3=H_2SO_4 4=HNO_3 5=NaOH 6=Ascorbic Acid
7=CH_3OH 8= $NaHSO_4$ 9=_____ 10=_____

DW=Drinking Water GW=Groundwater WW=Wastewater
O=Oil SW= Surface Water SO=Soil SL=Sludge A=Air
X1=_____ X2=_____ X3=_____

G=Grab C=Composite

Lab Id:	Sample Id:	Date:	Time:	Type	Matrix	Preservative	# of VOA Vials	# of Amber Glass	# of Clear Glass	# of Plastic	[illegible]	TAH CVOCs							QA Reporting Notes: (check if needed)
	[illegible]	[illegible]	1145	G	A	-					1	✓							
	[illegible]	[illegible]	1150	G	A	-					1	✓							

State specific reporting standards
If applicable, please list below.

☐ Provide MCP CAM Report
Were all field QC requirements met as per MADEP CAM Section 2.0?
☐ Yes ☐ No
(Response required for CAM report)

☐ Fax results when available to ([illegible]) [illegible]
☐ E-mail to _____
EDD Format _____

Condition upon receipt: ☐ Iced ☐ Ambient ☐ °C 23

Relinquished by:	Received by:	Date:	Time:
[illegible]	[signature]	7/15/04	11:10

11 Almgren Drive • Agawam, Massachusetts 01001 • 413-789-9018 • Fax 413-789-4076 • www.spectrum-analytical.com

SPECTRUM ANALYTICAL, INC.
Featuring
HANIBAL TECHNOLOGY

CHAIN OF CUSTODY RECORD

Page 1 of 1

Special Handling:
☐ Standard TAT - 7 to 10 business days
☒ Rush TAT - Date Needed: 7/21/04
· All TATs subject to laboratory approval. Min. 24-hour notification needed for rushes.
· Samples disposed of after 60 days unless otherwise instructed.

Report To: ERM-New England Inc
Two Hartford Square West Suite 300
146 Wallace St
Hartford CT 06106
Project Mgr.: Bob Drucci

Invoice To: Same
P.O. No.: RQN:

Project No.: 0016718
Site Name: Intel Auto
Location: New Milford State: CT
Sampler(s): J. Ferrat

1=Na_2S2O_3 2=HCl 3=H_2SO_4 4=HNO_3 5=NaOH 6=Ascorbic Acid
7=CH_3OH 8= $NaHSO_4$ 9=____ 10=____

DW=Drinking Water GW=Groundwater WW=Wastewater
O=Oil SW= Surface Water SO=Soil SL=Sludge A=Air
X1=____ X2=____ X3=____

G=Grab C=Composite

Lab Id:	Sample Id:	Date:	Time:	Type	Matrix	Preservative	Containers: # of VOA Vials	# of Amber Glass	# of Clear Glass	# of Plastic		Analyses: 8260 Cuoc only								QA Reporting Notes: (check if needed)
	ASW-1	7/20/04	0800	G	GW	2	2					X								

State specific reporting standards
If applicable, please list below.

☐ Provide MCP CAM Report
Were all field QC requirements met as per MADEP CAM Section 2.0?
☐ Yes ☐ No
(Response required for CAM report)

☒ Fax results when available to (860) 521-5680
☐ E-mail to ____
EDD Format ____

Relinquished by:	Received by:	Date:	Time:
[signature]	[signature]	7/21/04	1:20

Condition upon receipt: ☐ Iced ☐ Ambient ☐ °C 2C

11 Almgren Drive • Agawam, Massachusetts 01001 • 413-789-9018 • Fax 413-789-4076 • www.spectrum-analytical.com

REFRIG

Report Date:
19-Jul-04 15:35

SPECTRUM ANALYTICAL, INC.
Featuring
HANIBAL TECHNOLOGY

☑ Final Report
☐ Re-Issued Report
☐ Revised Report

Laboratory Report

Environmental Resources Management
146 Wyllys Street, Suite 300
Hartford, CT 06106
Attn: Robert Drake

Project: Intelidata - New Milford, CT
Project #: 0016718

Laboratory ID	Client Sample ID	Container	Matrix	Date Sampled	Date Received
SA15209-01	SVE-1	Summa canister	Air	12-Jul-04 15:20	14-Jul-04 13:15
SA15209-02	SVE-2	Summa canister	Air	12-Jul-04 15:25	14-Jul-04 13:15
SA15209-03	Effluent	Summa canister	Air	12-Jul-04 15:30	14-Jul-04 13:15

I attest that the information contained within the report has been reviewed for accuracy and checked against the quality control requirements for each method. All applicable NELAC requirements have been met.
Please note that this report contains 8 pages of analytical data plus Chain of Custody document(s).
This report may not be reproduced, except in full, without written approval from Spectrum Analytical, Inc.

Massachusetts Certification # M-MA138/MA1110
Connecticut # PH-0777
Florida # E87600/E87936
Maine # MA138
New Hampshire # 2538
New York # 11393/11840
Rhode Island # 98
USDA # S-51435

ACCREDITED IN ACCORDANCE WITH nelac

Authorized by:

Hanibal C. Tayeh, Ph.D.
President/Laboratory Director

Spectrum Analytical, Inc. is a NELAC accredited laboratory organization and meets NELAC testing standards. Use of the NELAC logo however does not insure that Spectrum is currently accredited for the specific method indicated. Please refer to our "Quality" webpage at www.spectrum-analytical.com for a full listing of our current certifications.

Sample Identification	Client Project #	Matrix	Collection Date/Time	Received
SVE-1 SA15209-01	0016718	Air	12-Jul-04 15:20	14-Jul-04

Analyte(s)	*Result ppbv*	**RDL*	*Result ug/m³*	**RDL*	*Method Ref.*	*Analyzed*	*Batch*	*Analyst*	*Flag*
Air Quality Analyses									
Modified EPA TO-14A									
Dichlorodifluoromethane (Freon12)	BRL	156	BRL	771.39	Mod. EPA TO-14A	15-Jul-04	4070757	DG	
Chloromethane	BRL	156	BRL	322.21	"	"	"	"	
1,2-Dichlorotetrafluoroethane (Freon 114)	BRL	156	BRL	1,090.40	"	"	"	"	
Vinyl chloride	BRL	156	BRL	398.77	"	"	"	"	
Bromomethane	BRL	156	BRL	605.50	"	"	"	"	
Chloroethane	BRL	156	BRL	411.53	"	"	"	"	
Trichlorofluoromethane (Freon 11)	BRL	156	BRL	876.66	"	"	"	"	
1,1-Dichloroethene	1900	156	7,537.83	618.90	"	"	"	"	
Methylene chloride	BRL	156	BRL	541.69	"	"	"	"	
1,1,2-Trichlorotrifluoroethane (Freon 113)	331	156	2,536.99	1,195.68	"	"	"	"	
1,1-Dichloroethane	209	156	846.26	631.66	"	"	"	"	
cis-1,2-Dichloroethene	162	156	642.37	618.58	"	"	"	"	
Chloroform	BRL	156	BRL	759.26	"	"	"	"	
1,2-Dichloroethane	BRL	156	BRL	631.66	"	"	"	"	
1,1,1-Trichloroethane	127000	625	692,916.16	3,410.02	"	15-Jul-04	"	"	
Benzene	BRL	156	BRL	497.67	"	15-Jul-04	"	"	
Carbon tetrachloride	BRL	156	BRL	981.30	"	"	"	"	
1,2-Dichloropropane	BRL	156	BRL	720.98	"	"	"	"	
Trichloroethene	2670	156	14,349.20	838.38	"	"	"	"	
cis-1,3-Dichloropropene	BRL	156	BRL	708.22	"	"	"	"	
trans-1,3-Dichloropropene	BRL	156	BRL	708.22	"	"	"	"	
1,1,2-Trichloroethane	BRL	156	BRL	851.14	"	"	"	"	
Toluene	BRL	156	BRL	586.99	"	"	"	"	
1,2-Dibromoethane (EDB)	BRL	156	BRL	1,198.87	"	"	"	"	
Tetrachloroethene	394	156	2,671.79	1,057.87	"	"	"	"	
Chlorobenzene	BRL	156	BRL	718.43	"	"	"	"	
Ethylbenzene	BRL	156	BRL	676.32	"	"	"	"	
m,p-Xylene	BRL	156	BRL	676.32	"	"	"	"	
Styrene	BRL	156	BRL	663.56	"	"	"	"	
o-Xylene	BRL	156	BRL	676.32	"	"	"	"	
1,1,2,2-Tetrachloroethane	BRL	156	BRL	1,071.26	"	"	"	"	
1,3,5-Trimethylbenzene	BRL	156	BRL	766.92	"	"	"	"	
4-Ethyltoluene	BRL	156	BRL	766.92	"	"	"	"	
1,2,4-Trimethylbenzene	BRL	156	BRL	766.92	"	"	"	"	
1,3-Dichlorobenzene	BRL	156	BRL	937.91	"	"	"	"	
Benzyl chloride	BRL	156	BRL	803.93	"	"	"	"	
1,4-Dichlorobenzene	BRL	156	BRL	937.91	"	"	"	"	
1,2-Dichlorobenzene	BRL	156	BRL	937.91	"	"	"	"	
1,2,4-Trichlorobenzene	BRL	156	BRL	1,158.04	"	"	"	"	
Hexachlorobutadiene	BRL	156	BRL	1,663.36	"	"	"	"	
Surrogate: 4-Bromofluorobenzene	*88.8*	*75-125 %*			"	"	"	"	

Sample Identification	Client Project #	Matrix	Collection Date/Time	Received
SVE-2 SA15209-02	0016718	Air	12-Jul-04 15:25	14-Jul-04

Analyte(s)	*Result ppbv*	**RDL*	*Result ug/m³*	**RDL*	*Method Ref.*	*Analyzed*	*Batch*	*Analyst*	*Flag*
Air Quality Analyses									
Modified EPA TO-14A									
Dichlorodifluoromethane (Freon12)	BRL	64.0	BRL	316.47	Mod. EPA TO-14A	15-Jul-04	4070757	DG	
Chloromethane	BRL	64.0	BRL	132.19	"	"	"	"	
1,2-Dichlorotetrafluoroethane (Freon 114)	BRL	64.0	BRL	447.35	"	"	"	"	
Vinyl chloride	BRL	64.0	BRL	163.60	"	"	"	"	
Bromomethane	BRL	64.0	BRL	248.41	"	"	"	"	
Chloroethane	BRL	64.0	BRL	168.83	"	"	"	"	
Trichlorofluoromethane (Freon 11)	BRL	64.0	BRL	359.66	"	"	"	"	
1,1-Dichloroethene	76.8	64.0	304.69	253.91	"	"	"	"	
Methylene chloride	BRL	64.0	BRL	222.23	"	"	"	"	
1,1,2-Trichlorotrifluoroethane (Freon 113)	BRL	64.0	BRL	490.54	"	"	"	"	
1,1-Dichloroethane	BRL	64.0	BRL	259.14	"	"	"	"	
cis-1,2-Dichloroethene	BRL	64.0	BRL	253.78	"	"	"	"	
Chloroform	BRL	64.0	BRL	311.49	"	"	"	"	
1,2-Dichloroethane	BRL	64.0	BRL	259.14	"	"	"	"	
1,1,1-Trichloroethane	5870	64.0	32,026.91	349.19	"	"	"	"	
Benzene	BRL	64.0	BRL	204.17	"	"	"	"	
Carbon tetrachloride	BRL	64.0	BRL	402.58	"	"	"	"	
1,2-Dichloropropane	BRL	64.0	BRL	295.79	"	"	"	"	
Trichloroethene	243	64.0	1,305.94	343.95	"	"	"	"	
cis-1,3-Dichloropropene	BRL	64.0	BRL	290.55	"	"	"	"	
trans-1,3-Dichloropropene	BRL	64.0	BRL	290.55	"	"	"	"	
1,1,2-Trichloroethane	BRL	64.0	BRL	349.19	"	"	"	"	
Toluene	BRL	64.0	BRL	240.82	"	"	"	"	
1,2-Dibromoethane (EDB)	BRL	64.0	BRL	491.84	"	"	"	"	
Tetrachloroethene	BRL	64.0	BRL	434.00	"	"	"	"	
Chlorobenzene	BRL	64.0	BRL	294.74	"	"	"	"	
Ethylbenzene	BRL	64.0	BRL	277.46	"	"	"	"	
m,p-Xylene	BRL	64.0	BRL	277.46	"	"	"	"	
Styrene	BRL	64.0	BRL	272.23	"	"	"	"	
o-Xylene	BRL	64.0	BRL	277.46	"	"	"	"	
1,1,2,2-Tetrachloroethane	BRL	64.0	BRL	439.49	"	"	"	"	
1,3,5-Trimethylbenzene	BRL	64.0	BRL	314.63	"	"	"	"	
4-Ethyltoluene	BRL	64.0	BRL	314.63	"	"	"	"	
1,2,4-Trimethylbenzene	BRL	64.0	BRL	314.63	"	"	"	"	
1,3-Dichlorobenzene	BRL	64.0	BRL	384.79	"	"	"	"	
Benzyl chloride	BRL	64.0	BRL	329.82	"	"	"	"	
1,4-Dichlorobenzene	BRL	64.0	BRL	384.79	"	"	"	"	
1,2-Dichlorobenzene	BRL	64.0	BRL	384.79	"	"	"	"	
1,2,4-Trichlorobenzene	BRL	64.0	BRL	475.09	"	"	"	"	
Hexachlorobutadiene	BRL	64.0	BRL	682.40	"	"	"	"	
Surrogate: 4-Bromofluorobenzene	*95.2*	*75-125 %*			"	"	"	"	

This laboratory report is not valid without an authorized signature on the cover page.

*Reportable Detection Limit BRL = Below Reporting Limit

Sample Identification	Client Project #	Matrix	Collection Date/Time	Received
Effluent SA15209-03	0016718	Air	12-Jul-04 15:30	14-Jul-04

Analyte(s)	*Result ppbv*	**RDL*	*Result ug/m³*	**RDL*	*Method Ref.*	*Analyzed*	*Batch*	*Analyst*	*Flag*
Air Quality Analyses									
Modified EPA TO-14A									
Dichlorodifluoromethane (Freon12)	0.840	0.500	4.15	2.47	Mod. EPA TO-14A	15-Jul-04	4070757	DG	
Chloromethane	BRL	0.500	BRL	1.03	"	"	"	"	
1,2-Dichlorotetrafluoroethane (Freon 114)	BRL	0.500	BRL	3.49	"	"	"	"	
Vinyl chloride	BRL	0.500	BRL	1.28	"	"	"	"	
Bromomethane	BRL	0.500	BRL	1.94	"	"	"	"	
Chloroethane	BRL	0.500	BRL	1.32	"	"	"	"	
Trichlorofluoromethane (Freon 11)	BRL	0.500	BRL	2.81	"	"	"	"	
1,1-Dichloroethene	0.960	0.500	3.81	1.98	"	"	"	"	
Methylene chloride	2.43	0.500	8.44	1.74	"	"	"	"	
1,1,2-Trichlorotrifluoroethane (Freon 113)	BRL	0.500	BRL	3.83	"	"	"	"	
1,1-Dichloroethane	BRL	0.500	BRL	2.02	"	"	"	"	
cis-1,2-Dichloroethene	BRL	0.500	BRL	1.98	"	"	"	"	
Chloroform	BRL	0.500	BRL	2.43	"	"	"	"	
1,2-Dichloroethane	BRL	0.500	BRL	2.02	"	"	"	"	
1,1,1-Trichloroethane	0.840	0.500	4.58	2.73	"	"	"	"	
Benzene	BRL	0.500	BRL	1.60	"	"	"	"	
Carbon tetrachloride	BRL	0.500	BRL	3.15	"	"	"	"	
1,2-Dichloropropane	BRL	0.500	BRL	2.31	"	"	"	"	
Trichloroethene	BRL	0.500	BRL	2.69	"	"	"	"	
cis-1,3-Dichloropropene	BRL	0.500	BRL	2.27	"	"	"	"	
trans-1,3-Dichloropropene	BRL	0.500	BRL	2.27	"	"	"	"	
1,1,2-Trichloroethane	BRL	0.500	BRL	2.73	"	"	"	"	
Toluene	BRL	0.500	BRL	1.88	"	"	"	"	
1,2-Dibromoethane (EDB)	BRL	0.500	BRL	3.84	"	"	"	"	
Tetrachloroethene	BRL	0.500	BRL	3.39	"	"	"	"	
Chlorobenzene	BRL	0.500	BRL	2.30	"	"	"	"	
Ethylbenzene	BRL	0.500	BRL	2.17	"	"	"	"	
m,p-Xylene	BRL	0.500	BRL	2.17	"	"	"	"	
Styrene	BRL	0.500	BRL	2.13	"	"	"	"	
o-Xylene	BRL	0.500	BRL	2.17	"	"	"	"	
1,1,2,2-Tetrachloroethane	BRL	0.500	BRL	3.43	"	"	"	"	
1,3,5-Trimethylbenzene	BRL	0.500	BRL	2.46	"	"	"	"	
4-Ethyltoluene	BRL	0.500	BRL	2.46	"	"	"	"	
1,2,4-Trimethylbenzene	BRL	0.500	BRL	2.46	"	"	"	"	
1,3-Dichlorobenzene	BRL	0.500	BRL	3.01	"	"	"	"	
Benzyl chloride	BRL	0.500	BRL	2.58	"	"	"	"	
1,4-Dichlorobenzene	BRL	0.500	BRL	3.01	"	"	"	"	
1,2-Dichlorobenzene	BRL	0.500	BRL	3.01	"	"	"	"	
1,2,4-Trichlorobenzene	BRL	0.500	BRL	3.71	"	"	"	"	
Hexachlorobutadiene	BRL	0.500	BRL	5.33	"	"	"	"	
Surrogate: 4-Bromofluorobenzene	*96.0*	*75-125 %*			"	"	"	"	

Air Quality Analyses - Quality Control

Analyte(s)	Result	*RDL	Units	Spike Level	Source Result	%REC	%REC Limits	RPD	RPD Limit	Flag
Batch 4070757 - General Air Prep										
Blank (4070757-BLK1)				Prepared & Analyzed: 14-Jul-04						
Dichlorodifluoromethane (Freon12)	BRL	0.500	ppbv							
Chloromethane	BRL	0.500	ppbv							
1,2-Dichlorotetrafluoroethane (Freon 114)	BRL	0.500	ppbv							
Vinyl chloride	BRL	0.500	ppbv							
Bromomethane	BRL	0.500	ppbv							
Chloroethane	BRL	0.500	ppbv							
Trichlorofluoromethane (Freon 11)	BRL	0.500	ppbv							
1,1-Dichloroethene	BRL	0.500	ppbv							
Methylene chloride	BRL	0.500	ppbv							
1,1,2-Trichlorotrifluoroethane (Freon 113)	BRL	0.500	ppbv							
1,1-Dichloroethane	BRL	0.500	ppbv							
cis-1,2-Dichloroethene	BRL	0.500	ppbv							
Chloroform	BRL	0.500	ppbv							
1,2-Dichloroethane	BRL	0.500	ppbv							
1,1,1-Trichloroethane	BRL	0.500	ppbv							
Benzene	BRL	0.500	ppbv							
Carbon tetrachloride	BRL	0.500	ppbv							
1,2-Dichloropropane	BRL	0.500	ppbv							
Trichloroethene	BRL	0.500	ppbv							
cis-1,3-Dichloropropene	BRL	0.500	ppbv							
trans-1,3-Dichloropropene	BRL	0.500	ppbv							
1,1,2-Trichloroethane	BRL	0.500	ppbv							
Toluene	BRL	0.500	ppbv							
1,2-Dibromoethane (EDB)	BRL	0.500	ppbv							
Tetrachloroethene	BRL	0.500	ppbv							
Chlorobenzene	BRL	0.500	ppbv							
Ethylbenzene	BRL	0.500	ppbv							
m,p-Xylene	BRL	0.500	ppbv							
Styrene	BRL	0.500	ppbv							
o-Xylene	BRL	0.500	ppbv							
1,1,2,2-Tetrachloroethane	BRL	0.500	ppbv							
1,3,5-Trimethylbenzene	BRL	0.500	ppbv							
4-Ethyltoluene	BRL	0.500	ppbv							
1,2,4-Trimethylbenzene	BRL	0.500	ppbv							
1,3-Dichlorobenzene	BRL	0.500	ppbv							
Benzyl chloride	BRL	0.500	ppbv							
1,4-Dichlorobenzene	BRL	0.500	ppbv							
1,2-Dichlorobenzene	BRL	0.500	ppbv							
1,2,4-Trichlorobenzene	BRL	0.500	ppbv							
Hexachlorobutadiene	BRL	0.500	ppbv							
Surrogate: 4-Bromofluorobenzene	*11.5*		ppbv	*12.5*		*92.0*	*75-125*			

Air Quality Analyses - Quality Control

Analyte(s)	Result	*RDL	Units	Spike Level	Source Result	%REC	%REC Limits	RPD	RPD Limit	Flag
Batch 4070757 - General Air Prep										
LCS (4070757-BS1)				Prepared & Analyzed: 14-Jul-04						
Dichlorodifluoromethane (Freon12)	9.87		ppbv	10.0		98.7	70-130			
Chloromethane	8.29		ppbv	10.0		82.9	70-130			
1,2-Dichlorotetrafluoroethane (Freon 114)	9.80		ppbv	10.0		98.0	70-130			
Vinyl chloride	10.0		ppbv	10.0		100	70-130			
Bromomethane	11.3		ppbv	10.0		113	70-130			
Chloroethane	11.9		ppbv	10.0		119	70-130			
Trichlorofluoromethane (Freon 11)	9.87		ppbv	10.0		98.7	70-130			
1,1-Dichloroethene	9.70		ppbv	10.0		97.0	70-130			
Methylene chloride	9.47		ppbv	10.0		94.7	70-130			
1,1,2-Trichlorotrifluoroethane (Freon 113)	9.42		ppbv	10.0		94.2	70-130			
1,1-Dichloroethane	9.71		ppbv	10.0		97.1	70-130			
cis-1,2-Dichloroethene	10.3		ppbv	10.0		103	70-130			
Chloroform	9.73		ppbv	10.0		97.3	70-130			
1,2-Dichloroethane	9.91		ppbv	10.0		99.1	70-130			
1,1,1-Trichloroethane	10.5		ppbv	10.0		105	70-130			
Benzene	10.0		ppbv	10.0		100	70-130			
Carbon tetrachloride	9.99		ppbv	10.0		99.9	70-130			
1,2-Dichloropropane	10.0		ppbv	10.0		100	70-130			
Trichloroethene	10.2		ppbv	10.0		102	70-130			
cis-1,3-Dichloropropene	10.5		ppbv	10.0		105	70-130			
trans-1,3-Dichloropropene	9.44		ppbv	10.0		94.4	70-130			
1,1,2-Trichloroethane	9.43		ppbv	10.0		94.3	70-130			
Toluene	10.4		ppbv	10.0		104	70-130			
1,2-Dibromoethane (EDB)	9.69		ppbv	10.0		96.9	70-130			
Tetrachloroethene	9.60		ppbv	10.0		96.0	70-130			
Chlorobenzene	9.79		ppbv	10.0		97.9	70-130			
Ethylbenzene	10.6		ppbv	10.0		106	70-130			
m,p-Xylene	22.2		ppbv	20.0		111	70-130			
Styrene	12.8		ppbv	10.0		128	70-130			
o-Xylene	11.4		ppbv	10.0		114	70-130			
1,1,2,2-Tetrachloroethane	9.80		ppbv	10.0		98.0	70-130			
1,3,5-Trimethylbenzene	12.9		ppbv	10.0		129	70-130			
4-Ethyltoluene	10.7		ppbv	10.0		107	70-130			
1,2,4-Trimethylbenzene	11.5		ppbv	10.0		115	70-130			
1,3-Dichlorobenzene	9.96		ppbv	10.0		99.6	70-130			
Benzyl chloride	11.7		ppbv	10.0		117	70-130			
1,4-Dichlorobenzene	10.0		ppbv	10.0		100	70-130			
1,2-Dichlorobenzene	9.75		ppbv	10.0		97.5	70-130			
1,2,4-Trichlorobenzene	9.32		ppbv	10.0		93.2	70-130			
Hexachlorobutadiene	9.16		ppbv	10.0		91.6	70-130			
Surrogate: 4-Bromofluorobenzene	*12.2*		ppbv	*12.5*		*97.6*	*75-125*			

Air Quality Analyses - Quality Control

Analyte(s)	Result	*RDL	Units	Spike Level	Source Result	%REC	%REC Limits	RPD	RPD Limit	Flag
Batch 4070757 - General Air Prep										
Duplicate (4070757-DUP1)		**Source: SA15218-01**		Prepared & Analyzed: 14-Jul-04						
Dichlorodifluoromethane (Freon12)	0.580	0.500	ppbv		0.570			1.74	30	
Chloromethane	0.500	0.500	ppbv		0.470			6.19	30	
1,2-Dichlorotetrafluoroethane (Freon 114)	BRL	0.500	ppbv		BRL				30	
Vinyl chloride	BRL	0.500	ppbv		BRL				30	
Bromomethane	BRL	0.500	ppbv		BRL				30	
Chloroethane	BRL	0.500	ppbv		BRL				30	
Trichlorofluoromethane (Freon 11)	0.390	0.500	ppbv		0.380			2.60	30	
1,1-Dichloroethene	BRL	0.500	ppbv		BRL				30	
Methylene chloride	BRL	0.500	ppbv		BRL				30	
1,1,2-Trichlorotrifluoroethane (Freon 113)	BRL	0.500	ppbv		BRL				30	
1,1-Dichloroethane	BRL	0.500	ppbv		BRL				30	
cis-1,2-Dichloroethene	BRL	0.500	ppbv		BRL				30	
Chloroform	BRL	0.500	ppbv		BRL				30	
1,2-Dichloroethane	BRL	0.500	ppbv		BRL				30	
1,1,1-Trichloroethane	BRL	0.500	ppbv		BRL				30	
Benzene	BRL	0.500	ppbv		BRL				30	
Carbon tetrachloride	BRL	0.500	ppbv		BRL				30	
1,2-Dichloropropane	BRL	0.500	ppbv		BRL				30	
Trichloroethene	BRL	0.500	ppbv		BRL				30	
cis-1,3-Dichloropropene	BRL	0.500	ppbv		BRL				30	
trans-1,3-Dichloropropene	BRL	0.500	ppbv		BRL				30	
1,1,2-Trichloroethane	BRL	0.500	ppbv		BRL				30	
Toluene	BRL	0.500	ppbv		BRL				30	
1,2-Dibromoethane (EDB)	BRL	0.500	ppbv		BRL				30	
Tetrachloroethene	BRL	0.500	ppbv		BRL				30	
Chlorobenzene	BRL	0.500	ppbv		BRL				30	
Ethylbenzene	BRL	0.500	ppbv		BRL				30	
m,p-Xylene	BRL	0.500	ppbv		BRL				30	
Styrene	BRL	0.500	ppbv		BRL				30	
o-Xylene	BRL	0.500	ppbv		BRL				30	
1,1,2,2-Tetrachloroethane	BRL	0.500	ppbv		BRL				30	
1,3,5-Trimethylbenzene	BRL	0.500	ppbv		BRL				30	
4-Ethyltoluene	BRL	0.500	ppbv		BRL				30	
1,2,4-Trimethylbenzene	BRL	0.500	ppbv		BRL				30	
1,3-Dichlorobenzene	BRL	0.500	ppbv		BRL				30	
Benzyl chloride	BRL	0.500	ppbv		BRL				30	
1,4-Dichlorobenzene	BRL	0.500	ppbv		BRL				30	
1,2-Dichlorobenzene	BRL	0.500	ppbv		BRL				30	
1,2,4-Trichlorobenzene	BRL	0.500	ppbv		BRL				30	
Hexachlorobutadiene	BRL	0.500	ppbv		BRL				30	
Surrogate: 4-Bromofluorobenzene	*11.8*		ppbv	*12.5*		*94.4*	*75-125*			

Notes and Definitions

BRL	Below Reporting Limit - Analyte NOT DETECTED at or above the reporting limit
dry	Sample results reported on a dry weight basis
NR	Not Reported
RPD	Relative Percent Difference

A plus sign (+) in the Method Reference column indicates the method is not accredited by NELAC.

Laboratory Control Sample (LCS): A known matrix spiked with compound(s) representative of the target analytes, which is used to document laboratory performance.

Matrix Duplicate: An intra-laboratory split sample which is used to document the precision of a method in a given sample matrix.

Matrix Spike: An aliquot of a sample spiked with a known concentration of target analyte(s). The spiking occurs prior to sample preparation and analysis. A matrix spike is used to document the bias of a method in a given sample matrix.

Method Blank: An analyte-free matrix to which all reagents are added in the same volumes or proportions as used in sample processing. The method blank should be carried through the complete sample preparation and analytical procedure. The method blank is used to document contamination resulting from the analytical process.

Method Detection Limit (MDL): The minimum concentration of a substance that can be measured and reported with 99% confidence that the analyte concentration is greater than zero and is determined from analysis of a sample in a given matrix type containing the analyte.

Reportable Detection Limit (RDL): The lowest concentration that can be reliably achieved within specified limits of precision and accuracy during routine laboratory operating conditions. The RDL is generally 5 to 10 times the MDL. However, it may be nominally chosen within these guidelines to simplify data reporting. For many analytes the RDL analyte concentration is selected as the lowest non-zero standard in the calibration curve. Sample RDLs are highly matrix-dependent.

Surrogate: An organic compound which is similar to the target analyte(s) in chemical composition and behavior in the analytical process, but which is not normally found in environmental samples. These compounds are spiked into all blanks, standards, and samples prior to analysis. Percent recoveries are calculated for each surrogate.

Validated by:
Hanibal C. Tayeh, Ph.D.
Nicole Brown

SA15209 (m3)

SPECTRUM ANALYTICAL, INC.
Featuring
HANIBAL TECHNOLOGY

CHAIN OF CUSTODY RECORD

Page 1 of 1

Special Handling:
- ☐ Standard TAT - 7 to 10 business days
- ☒ Rush TAT - Date Needed: 7-19-04
- All TATs subject to laboratory approval. Min. 24-hour notification needed for rushes.
- Samples disposed of after 60 days unless otherwise instructed.

Report To: ERM New England, Inc
Two Hartford Sq. West Suite 300
Hartford, CT 06106

Project Mgr.: Bob Drake

Invoice To: SAME
IW#40021520

P.O. No.: RQN:

Project No.: 0016718
Site Name: Intelidata
Location: New Milford State: CT
Sampler(s): Peter J Ernst

1=$Na_2S_2O_3$ 2=HCl 3=H_2SO_4 4=HNO_3 5=NaOH 6=Ascorbic Acid
7=CH_3OH 8= $NaHSO_4$ 9= 10=

DW=Drinking Water GW=Groundwater WW=Wastewater
O=Oil SW= Surface Water SO=Soil SL=Sludge A=Air
X1= 1 X2= X3=

G=Grab C=Composite

QA Reporting Notes: (check if needed)
State specific reporting standards *If applicable, please list below.*
☐ Provide MCP CAM Report
Were all field QC requirements met as per MADEP CAM Section 2.0?
☐ Yes ☐ No
(Response required for CAM report)

Lab Id:	Sample Id:	Date:	Time:	Type	Matrix	Preservative	# of VOA Vials	# of Amber Glass	# of Clear Glass	# of Plastic	Summa Canister	TO14	~~TO15~~ CA						
SA15209-01	SVE-1	7-12-04	1520	G	A	–					1	✓							
-02	SVE-2	7-12-04	1525	G	A	–					1	✓							
-03	Effluent	7-12-04	1530	G	A	–					1	✓							

☒ Fax results when available to (860) 524-5080
☐ E-mail to
EDD Format

Condition upon receipt: ☒ Iced ☒ Ambient ☒ °C 25

Relinquished by:	Received by:	Date:	Time:
Corene Auer	[signature]	7/14/04	10:06
[signature]	[signature]	7/14/04	13:15

SPECTRUM ANALYTICAL, INC.
Featuring
ERM ANALYTICAL TECHNOLOGY Inc.

CHAIN OF CUSTODY RECORD

Page 1 of 1

Special Handling:
- ☐ Standard TAT - 7 to 10 business days
- ☒ Rush TAT - Date Needed: 6/18/04
- All TATs subject to laboratory approval. Min. 24-hour notification needed for rushes.
- Samples disposed of after 60 days unless otherwise instructed.

Report To: Two Hartford Square West Suite 200
146 Wyllys Street
Hartford, CT 06106

Project Mgr.: Bob Drake

Invoice To: Same

P.O. No.: _____ RQN: _____

Project No.: 0016718
Site Name: Intelidata
Location: New Milford State: CT
Sampler(s): J Fermet

1=Na_2S2O_3 2=HCl 3=H_2SO_4 4=HNO_3 5=NaOH 6=Ascorbic Acid
7=CH_3OH 8= $NaHSO_4$ 9=_____ 10=_____

DW=Drinking Water GW=Groundwater WW=Wastewater
O=Oil SW= Surface Water SO=Soil SL=Sludge A=Air
X1=_____ X2=_____ X3=_____

G=Grab C=Composite

Lab Id:	Sample Id:	Date:	Time:	Type	Matrix	Preservative	Containers: # of VOA Vials	# of Amber Glass	# of Clear Glass	# of Plastic		Analyses: 8260								QA Reporting Notes: (check if needed)
	ASW-1	6/15/04	0930	G	GW	2	2					X								
	ASW-2	6/15/04	1035	G	GW	2	2					X								
	Trip Blank	~~[illegible]~~	—	G	—	2	1					X								

State specific reporting standards
If applicable, please list below.

☐ Provide MCP CAM Report
Were all field QC requirements met as per MADEP CAM Section 2.0?
☐ Yes ☐ No
(Response required for CAM report)

☒ Fax results when available to (860) 524-5680
☐ E-mail to _____
EDD Format _____

Relinquished by:	Received by:	Date:	Time:
[signature]	[signature]	6/15/04	1320

Condition upon receipt: ☐ Iced ☐ Ambient ☐ °C 0

11 Almgren Drive • Agawam, Massachusetts 01001 • 413-789-9018 • Fax 413-789-4076 • www.spectrum-analytical.com

in refrigerator

SPECTRUM ANALYTICAL, INC.
Featuring
HANIBAL TECHNOLOGY

CHAIN OF CUSTODY RECORD

Page 2 of 2

Special Handling:
☐ Standard TAT - 7 to 10 business days
☒ Rush TAT - Date Needed: 6/18/04
· All TATs subject to laboratory approval. Min. 24-hour notification needed for rushes.
· Samples disposed of after 60 days unless otherwise instructed.

Report To: See Page 1

Project Mgr.:

Invoice To: Same

P.O. No.: RQN:

Project No.: 00 16 17 18
Site Name: Intelidata
Location: New Milford State: CT
Sampler(s): Internet

1=Na_2S2O_3 2=HCl 3=H_2SO_4 4=HNO_3 5=NaOH 6=Ascorbic Acid
7=CH_3OH 8= $NaHSO_4$ 9=____ 10=____

DW=Drinking Water GW=Groundwater WW=Wastewater
O=Oil SW= Surface Water SO=Soil SL=Sludge A=Air
X1=____ X2=____ X3=____

G=Grab C=Composite

Lab Id:	Sample Id:	Date:	Time:	Type	Matrix	Preservative	# of VOA Vials	# of Amber Glass	# of Clear Glass	# of Plastic		8260								QA Reporting Notes: (check if needed)
	CHAR Drum	6/14/04	1020	C	SO	7.8	3	2				X								
	Trip Blank	~~6~~		G	-	2	1					X								

State specific reporting standards *If applicable, please list below.*

☐ Provide MCP CAM Report
Were all field QC requirements met as per MADEP CAM Section 2.0?
☐ Yes ☐ No
(Response required for CAM report)

☒ Fax results when available to (860) 524-5680
☐ E-mail to
EDD Format

Condition upon receipt: ☐ Iced ☐ Ambient ☐ °C 0

Relinquished by:	Received by:	Date:	Time:
[signature]	[signature]	6/14/04	1320

11 Almgren Drive • Agawam, Massachusetts 01001 • 413-789-9018 • Fax 413-789-4076 • www.spectrum-analytical.com

no refrigeration

Report Date:
27-Sep-04 08:50

SPECTRUM ANALYTICAL, INC.
Featuring
HANIBAL TECHNOLOGY

☐ Final Report
☐ Re-Issued Report
☑ Revised Report

Laboratory Report

Environmental Resources Management
146 Wyllys Street, Suite 300
Hartford, CT 06106
Attn: Robert Drake

Project: Intelidata - New Milford, CT
Project #: 0016718

Laboratory ID	Client Sample ID	Container	Matrix	Date Sampled	Date Received
SA16775-01	SVE-1	Summa canister	Air	18-Aug-04 09:57	19-Aug-04 13:00
SA16775-02	SVE-2	Summa canister	Air	18-Aug-04 10:30	19-Aug-04 13:00
SA16775-03	SVMP-1	Summa canister	Air	18-Aug-04 09:40	19-Aug-04 13:00
SA16775-04	SVMP-2	Summa canister	Air	18-Aug-04 09:06	19-Aug-04 13:00
SA16775-05	SVMP-3	Summa canister	Air	18-Aug-04 11:20	19-Aug-04 13:00
SA16775-06	SVMP-4	Summa canister	Air	18-Aug-04 11:02	19-Aug-04 13:00
SA16775-07	SVMP-5	Summa canister	Air	18-Aug-04 10:46	19-Aug-04 13:00
SA16775-08	SVMP-6	Summa canister	Air	18-Aug-04 10:13	19-Aug-04 13:00
SA16775-09	ASMP-2	Summa canister	Air	18-Aug-04 09:23	19-Aug-04 13:00
SA16775-10	ERM-13	Summa canister	Air	18-Aug-04 08:50	19-Aug-04 13:00
SA16775-11	IND-1	Summa canister	Air	17-Aug-04 08:08	19-Aug-04 13:00
SA16775-12	IND-2	Summa canister	Air	17-Aug-04 08:12	19-Aug-04 13:00

I attest that the information contained within the report has been reviewed for accuracy and checked against the quality control requirements for each method. All applicable NELAC requirements have been met.
Please note that this report contains 21 pages of analytical data plus Chain of Custody document(s).
This report may not be reproduced, except in full, without written approval from Spectrum Analytical, Inc.

Massachusetts Certification # M-MA138/MA1110
Connecticut # PH-0777
Florida # E87600/E87936
Maine # MA138
New Hampshire # 2538
New York # 11393/11840
Rhode Island # 98
USDA # S-51435

ACCREDITED IN ACCORDANCE WITH nelac

Authorized by:

Hanibal G. Tayeh, Ph.D.
President/Laboratory Director

Spectrum Analytical, Inc. is a NELAC accredited laboratory organization and meets NELAC testing standards. Use of the NELAC logo however does not insure that Spectrum is currently accredited for the specific method indicated. Please refer to our "Quality" webpage at www.spectrum-analytical.com for a full listing of our current certifications.

Sample Identification	Client Project #	Matrix	Collection Date/Time	Received
SVE-1 SA16775-01	0016718	Air	18-Aug-04 09:57	19-Aug-04

Analyte(s)	*Result*	*Units*	**RDL*	*Result ug/m³*	**RDL*	*Method Ref.*	*Analyzed*	*Batch*	*Analyst*	*Flag*
Air Quality Analyses										
Chlorinated VOCs by EPA TO-14		*ppbv*								
Chloromethane	BRL		16.0	BRL	33.05	Mod. EPA TO-14A	20-Aug-04	4081299	WB	
Vinyl chloride	BRL		16.0	BRL	40.90	"	"	"	"	
Chloroethane	BRL		16.0	BRL	42.21	"	"	"	"	
1,1-Dichloroethene	138		16.0	547.48	63.48	"	"	"	"	
Methylene chloride	34.9		16.0	121.19	55.56	"	"	"	"	
1,1-Dichloroethane	BRL		16.0	BRL	64.79	"	"	"	"	
cis-1,2-Dichloroethene	16.0		16.0	63.44	63.44	"	"	"	"	
Chloroform	BRL		16.0	BRL	77.87	"	"	"	"	
1,2-Dichloroethane	BRL		16.0	BRL	64.79	"	"	"	"	
1,1,1-Trichloroethane	2960		16.0	16,149.86	87.30	"	"	"	"	
Carbon tetrachloride	BRL		16.0	BRL	100.65	"	"	"	"	
1,2-Dichloropropane	BRL		16.0	BRL	73.95	"	"	"	"	
Trichloroethene	190		16.0	1,021.10	85.99	"	"	"	"	
cis-1,3-Dichloropropene	BRL		16.0	BRL	72.64	"	"	"	"	
trans-1,3-Dichloropropene	BRL		16.0	BRL	72.64	"	"	"	"	
1,1,2-Trichloroethane	BRL		16.0	BRL	87.30	"	"	"	"	
Tetrachloroethene	43.2		16.0	292.95	108.50	"	"	"	"	
Chlorobenzene	BRL		16.0	BRL	73.69	"	"	"	"	
1,1,2,2-Tetrachloroethane	BRL		16.0	BRL	109.87	"	"	"	"	
1,3-Dichlorobenzene	BRL		16.0	BRL	96.20	"	"	"	"	
1,4-Dichlorobenzene	BRL		16.0	BRL	96.20	"	"	"	"	
1,2-Dichlorobenzene	BRL		16.0	BRL	96.20	"	"	"	"	
Hexachlorobutadiene	BRL		16.0	BRL	170.60	"	"	"	"	
Surrogate: 4-Bromofluorobenzene	*98.4*		*75-125 %*			"	"	"	"	

Sample Identification	Client Project #	Matrix	Collection Date/Time	Received
SVE-2 SA16775-02	0016718	Air	18-Aug-04 10:30	19-Aug-04

Analyte(s)	*Result Units*	**RDL*	*Result ug/m³*	**RDL*	*Method Ref.*	*Analyzed*	*Batch*	*Analyst*	*Flag*
Air Quality Analyses									
Chlorinated VOCs by EPA TO-14	*ppbv*								
Chloromethane	BRL	46.8	BRL	96.66	Mod. EPA TO-14A	23-Aug-04	4081440	WB	
Vinyl chloride	BRL	46.8	BRL	119.63	"	"	"	"	
Chloroethane	BRL	46.8	BRL	123.46	"	"	"	"	
1,1-Dichloroethene	122	46.8	484.01	185.67	"	"	"	"	
Methylene chloride	BRL	46.8	BRL	162.51	"	"	"	"	
1,1-Dichloroethane	BRL	46.8	BRL	189.50	"	"	"	"	
cis-1,2-Dichloroethene	BRL	46.8	BRL	185.57	"	"	"	"	
Chloroform	BRL	46.8	BRL	227.78	"	"	"	"	
1,2-Dichloroethane	BRL	46.8	BRL	189.50	"	"	"	"	
1,1,1-Trichloroethane	2670	46.8	14,567.61	255.34	"	"	"	"	
Carbon tetrachloride	BRL	46.8	BRL	294.39	"	"	"	"	
1,2-Dichloropropane	BRL	46.8	BRL	216.29	"	"	"	"	
Trichloroethene	166	46.8	892.12	251.51	"	"	"	"	
cis-1,3-Dichloropropene	BRL	46.8	BRL	212.47	"	"	"	"	
trans-1,3-Dichloropropene	BRL	46.8	BRL	212.47	"	"	"	"	
1,1,2-Trichloroethane	BRL	46.8	BRL	255.34	"	"	"	"	
Tetrachloroethene	BRL	46.8	BRL	317.36	"	"	"	"	
Chlorobenzene	BRL	46.8	BRL	215.53	"	"	"	"	
1,1,2,2-Tetrachloroethane	BRL	46.8	BRL	321.38	"	"	"	"	
1,3-Dichlorobenzene	BRL	46.8	BRL	281.37	"	"	"	"	
1,4-Dichlorobenzene	BRL	46.8	BRL	281.37	"	"	"	"	
1,2-Dichlorobenzene	BRL	46.8	BRL	281.37	"	"	"	"	
Hexachlorobutadiene	BRL	46.8	BRL	499.01	"	"	"	"	
Surrogate: 4-Bromofluorobenzene	*99.2*	*75-125 %*			"	"	"	"	

This laboratory report is not valid without an authorized signature on the cover page.

*Reportable Detection Limit BRL = Below Reporting Limit

Sample Identification	Client Project #	Matrix	Collection Date/Time	Received
SVMP-1 SA16775-03	0016718	Air	18-Aug-04 09:40	19-Aug-04

Analyte(s)	*Result*	*Units*	**RDL*	*Result ug/m³*	**RDL*	*Method Ref.*	*Analyzed*	*Batch*	*Analyst*	*Flag*
Air Quality Analyses										
Chlorinated VOCs by EPA TO-14		*ppbv*								
Chloromethane	BRL		50.0	BRL	103.27	Mod. EPA TO-14A	20-Aug-04	4081294	WB	
Vinyl chloride	BRL		50.0	BRL	127.81	"	"	"	"	
Chloroethane	BRL		50.0	BRL	131.90	"	"	"	"	
1,1-Dichloroethene	193		50.0	765.69	198.36	"	"	"	"	
Methylene chloride	90.0		50.0	312.52	173.62	"	"	"	"	
1,1-Dichloroethane	BRL		50.0	BRL	202.45	"	"	"	"	
cis-1,2-Dichloroethene	BRL		50.0	BRL	198.26	"	"	"	"	
Chloroform	BRL		50.0	BRL	243.35	"	"	"	"	
1,2-Dichloroethane	BRL		50.0	BRL	202.45	"	"	"	"	
1,1,1-Trichloroethane	4280		50.0	23,351.82	272.80	"	"	"	"	
Carbon tetrachloride	BRL		50.0	BRL	314.52	"	"	"	"	
1,2-Dichloropropane	BRL		50.0	BRL	231.08	"	"	"	"	
Trichloroethene	318		50.0	1,709.01	268.71	"	"	"	"	
cis-1,3-Dichloropropene	BRL		50.0	BRL	226.99	"	"	"	"	
trans-1,3-Dichloropropene	BRL		50.0	BRL	226.99	"	"	"	"	
1,1,2-Trichloroethane	BRL		50.0	BRL	272.80	"	"	"	"	
Tetrachloroethene	190		50.0	1,288.43	339.06	"	"	"	"	
Chlorobenzene	BRL		50.0	BRL	230.27	"	"	"	"	
1,1,2,2-Tetrachloroethane	BRL		50.0	BRL	343.35	"	"	"	"	
1,3-Dichlorobenzene	BRL		50.0	BRL	300.61	"	"	"	"	
1,4-Dichlorobenzene	BRL		50.0	BRL	300.61	"	"	"	"	
1,2-Dichlorobenzene	BRL		50.0	BRL	300.61	"	"	"	"	
Hexachlorobutadiene	BRL		50.0	BRL	533.13	"	"	"	"	
Surrogate: 4-Bromofluorobenzene	*93.6*		*75-125 %*			"	"	"	"	

Sample Identification	Client Project #	Matrix	Collection Date/Time	Received
SVMP-2 SA16775-04	0016718	Air	18-Aug-04 09:06	19-Aug-04

Analyte(s)	*Result*	*Units*	**RDL*	*Result ug/m³*	**RDL*	*Method Ref.*	*Analyzed*	*Batch*	*Analyst*	*Flag*
Air Quality Analyses										
Chlorinated VOCs by EPA TO-14		*ppbv*								
Chloromethane	BRL		100	BRL	206.54	Mod. EPA TO-14A	19-Aug-04	4081294	WB	
Vinyl chloride	BRL		100	BRL	255.62	"	"	"	"	
Chloroethane	BRL		100	BRL	263.80	"	"	"	"	
1,1-Dichloroethene	384		100	1,523.44	396.73	"	"	"	"	
Methylene chloride	BRL		100	BRL	347.24	"	"	"	"	
1,1-Dichloroethane	BRL		100	BRL	404.91	"	"	"	"	
cis-1,2-Dichloroethene	BRL		100	BRL	396.52	"	"	"	"	
Chloroform	BRL		100	BRL	486.71	"	"	"	"	
1,2-Dichloroethane	BRL		100	BRL	404.91	"	"	"	"	
1,1,1-Trichloroethane	11200		100	61,107.57	545.60	"	"	"	"	
Carbon tetrachloride	BRL		100	BRL	629.04	"	"	"	"	
1,2-Dichloropropane	BRL		100	BRL	462.17	"	"	"	"	
Trichloroethene	420		100	2,257.18	537.42	"	"	"	"	
cis-1,3-Dichloropropene	BRL		100	BRL	453.99	"	"	"	"	
trans-1,3-Dichloropropene	BRL		100	BRL	453.99	"	"	"	"	
1,1,2-Trichloroethane	BRL		100	BRL	545.60	"	"	"	"	
Tetrachloroethene	BRL		100	BRL	678.12	"	"	"	"	
Chlorobenzene	BRL		100	BRL	460.53	"	"	"	"	
1,1,2,2-Tetrachloroethane	BRL		100	BRL	686.71	"	"	"	"	
1,3-Dichlorobenzene	BRL		100	BRL	601.23	"	"	"	"	
1,4-Dichlorobenzene	BRL		100	BRL	601.23	"	"	"	"	
1,2-Dichlorobenzene	BRL		100	BRL	601.23	"	"	"	"	
Hexachlorobutadiene	BRL		100	BRL	1,066.26	"	"	"	"	
Surrogate: 4-Bromofluorobenzene	*94.4*		*75-125 %*			"	"	"	"	

Sample Identification	Client Project #	Matrix	Collection Date/Time	Received
SVMP-3	0016718	Air	18-Aug-04 11:20	19-Aug-04
SA16775-05				

Analyte(s)	*Result Units*	**RDL*	*Result ug/m³*	**RDL*	*Method Ref.*	*Analyzed*	*Batch*	*Analyst*	*Flag*
Air Quality Analyses									
Chlorinated VOCs by EPA TO-14	*ppbv*								
Chloromethane	BRL	48.4	BRL	99.97	Mod. EPA TO-14A	20-Aug-04	4081299	WB	
Vinyl chloride	BRL	48.4	BRL	123.72	"	"	"	"	
Chloroethane	BRL	48.4	BRL	127.68	"	"	"	"	
1,1-Dichloroethene	259	48.4	1,027.53	192.02	"	"	"	"	
Methylene chloride	BRL	48.4	BRL	168.06	"	"	"	"	
1,1-Dichloroethane	BRL	48.4	BRL	195.98	"	"	"	"	
cis-1,2-Dichloroethene	BRL	48.4	BRL	191.92	"	"	"	"	
Chloroform	BRL	48.4	BRL	235.57	"	"	"	"	
1,2-Dichloroethane	BRL	48.4	BRL	195.98	"	"	"	"	
1,1,1-Trichloroethane	6480	48.4	35,355.09	264.07	"	"	"	"	
Carbon tetrachloride	BRL	48.4	BRL	304.45	"	"	"	"	
1,2-Dichloropropane	BRL	48.4	BRL	223.69	"	"	"	"	
Trichloroethene	442	48.4	2,375.41	260.11	"	"	"	"	
cis-1,3-Dichloropropene	BRL	48.4	BRL	219.73	"	"	"	"	
trans-1,3-Dichloropropene	BRL	48.4	BRL	219.73	"	"	"	"	
1,1,2-Trichloroethane	BRL	48.4	BRL	264.07	"	"	"	"	
Tetrachloroethene	62.0	48.4	420.43	328.21	"	"	"	"	
Chlorobenzene	BRL	48.4	BRL	222.90	"	"	"	"	
1,1,2,2-Tetrachloroethane	BRL	48.4	BRL	332.37	"	"	"	"	
1,3-Dichlorobenzene	BRL	48.4	BRL	290.99	"	"	"	"	
1,4-Dichlorobenzene	BRL	48.4	BRL	290.99	"	"	"	"	
1,2-Dichlorobenzene	BRL	48.4	BRL	290.99	"	"	"	"	
Hexachlorobutadiene	BRL	48.4	BRL	516.07	"	"	"	"	
Surrogate: 4-Bromofluorobenzene	*100*	*75-125 %*			"	"	"	"	

Sample Identification	Client Project #	Matrix	Collection Date/Time	Received
SVMP-4 SA16775-06	0016718	Air	18-Aug-04 11:02	19-Aug-04

Analyte(s)	*Result Units*	**RDL*	*Result ug/m³*	**RDL*	*Method Ref.*	*Analyzed*	*Batch*	*Analyst*	*Flag*
Air Quality Analyses									
Chlorinated VOCs by EPA TO-14	*ppbv*								
Chloromethane	BRL	49.2	BRL	101.62	Mod. EPA TO-14A	20-Aug-04	4081299	WB	
Vinyl chloride	BRL	49.2	BRL	125.77	"	"	"	"	
Chloroethane	BRL	49.2	BRL	129.79	"	"	"	"	
1,1-Dichloroethene	223	49.2	884.70	195.19	"	"	"	"	
Methylene chloride	BRL	49.2	BRL	170.84	"	"	"	"	
1,1-Dichloroethane	BRL	49.2	BRL	199.21	"	"	"	"	
cis-1,2-Dichloroethene	BRL	49.2	BRL	195.09	"	"	"	"	
Chloroform	BRL	49.2	BRL	239.46	"	"	"	"	
1,2-Dichloroethane	BRL	49.2	BRL	199.21	"	"	"	"	
1,1,1-Trichloroethane	4850	49.2	26,461.76	268.44	"	"	"	"	
Carbon tetrachloride	BRL	49.2	BRL	309.49	"	"	"	"	
1,2-Dichloropropane	BRL	49.2	BRL	227.39	"	"	"	"	
Trichloroethene	576	49.2	3,095.56	264.41	"	"	"	"	
cis-1,3-Dichloropropene	BRL	49.2	BRL	223.36	"	"	"	"	
trans-1,3-Dichloropropene	BRL	49.2	BRL	223.36	"	"	"	"	
1,1,2-Trichloroethane	BRL	49.2	BRL	268.44	"	"	"	"	
Tetrachloroethene	61.0	49.2	413.65	333.63	"	"	"	"	
Chlorobenzene	BRL	49.2	BRL	226.58	"	"	"	"	
1,1,2,2-Tetrachloroethane	BRL	49.2	BRL	337.86	"	"	"	"	
1,3-Dichlorobenzene	BRL	49.2	BRL	295.80	"	"	"	"	
1,4-Dichlorobenzene	BRL	49.2	BRL	295.80	"	"	"	"	
1,2-Dichlorobenzene	BRL	49.2	BRL	295.80	"	"	"	"	
Hexachlorobutadiene	BRL	49.2	BRL	524.60	"	"	"	"	
Surrogate: 4-Bromofluorobenzene	*101*	*75-125 %*			"	"	"	"	

Sample Identification	Client Project #	Matrix	Collection Date/Time	Received
SVMP-5 SA16775-07	0016718	Air	18-Aug-04 10:46	19-Aug-04

Analyte(s)	*Result Units*	**RDL*	*Result ug/m³*	**RDL*	*Method Ref.*	*Analyzed*	*Batch*	*Analyst*	*Flag*
Air Quality Analyses									
Chlorinated VOCs by EPA TO-14	*ppbv*								
Chloromethane	BRL	3.08	BRL	6.36	Mod. EPA TO-14A	21-Aug-04	4081299	WB	
Vinyl chloride	BRL	3.08	BRL	7.87	"	"	"	"	
Chloroethane	BRL	3.08	BRL	8.13	"	"	"	"	
1,1-Dichloroethene	27.1	3.08	107.51	12.22	"	"	"	"	
Methylene chloride	10.6	3.08	36.81	10.69	"	"	"	"	
1,1-Dichloroethane	BRL	3.08	BRL	12.47	"	"	"	"	
cis-1,2-Dichloroethene	BRL	3.08	BRL	12.21	"	"	"	"	
Chloroform	BRL	3.08	BRL	14.99	"	"	"	"	
1,2-Dichloroethane	BRL	3.08	BRL	12.47	"	"	"	"	
1,1,1-Trichloroethane	468	3.08	2,553.42	16.80	"	"	"	"	
Carbon tetrachloride	BRL	3.08	BRL	19.37	"	"	"	"	
1,2-Dichloropropane	BRL	3.08	BRL	14.23	"	"	"	"	
Trichloroethene	73.8	3.08	396.62	16.55	"	"	"	"	
cis-1,3-Dichloropropene	BRL	3.08	BRL	13.98	"	"	"	"	
trans-1,3-Dichloropropene	BRL	3.08	BRL	13.98	"	"	"	"	
1,1,2-Trichloroethane	BRL	3.08	BRL	16.80	"	"	"	"	
Tetrachloroethene	12.3	3.08	83.41	20.89	"	"	"	"	
Chlorobenzene	BRL	3.08	BRL	14.18	"	"	"	"	
1,1,2,2-Tetrachloroethane	BRL	3.08	BRL	21.15	"	"	"	"	
1,3-Dichlorobenzene	BRL	3.08	BRL	18.52	"	"	"	"	
1,4-Dichlorobenzene	3.26	3.08	19.60	18.52	"	"	"	"	
1,2-Dichlorobenzene	BRL	3.08	BRL	18.52	"	"	"	"	
Hexachlorobutadiene	BRL	3.08	BRL	32.84	"	"	"	"	
Surrogate: 4-Bromofluorobenzene	*100*	*75-125 %*			"	"	"	"	

Sample Identification	Client Project #	Matrix	Collection Date/Time	Received
SVMP-6 SA16775-08	0016718	Air	18-Aug-04 10:13	19-Aug-04

Analyte(s)	*Result*	*Units*	**RDL*	*Result ug/m³*	**RDL*	*Method Ref.*	*Analyzed*	*Batch*	*Analyst*	*Flag*
Air Quality Analyses										
Chlorinated VOCs by EPA TO-14		*ppbv*								
Chloromethane		BRL	1.24	BRL	2.56	Mod. EPA TO-14A	21-Aug-04	4081299	WB	
Vinyl chloride		BRL	1.24	BRL	3.17	"	"	"	"	
Chloroethane		BRL	1.24	BRL	3.27	"	"	"	"	
1,1-Dichloroethene		6.20	1.24	24.60	4.92	"	"	"	"	
Methylene chloride		1.51	1.24	5.24	4.31	"	"	"	"	
1,1-Dichloroethane		BRL	1.24	BRL	5.02	"	"	"	"	
cis-1,2-Dichloroethene		BRL	1.24	BRL	4.92	"	"	"	"	
Chloroform		BRL	1.24	BRL	6.04	"	"	"	"	
1,2-Dichloroethane		BRL	1.24	BRL	5.02	"	"	"	"	
1,1,1-Trichloroethane		138	1.24	752.93	6.77	"	"	"	"	
Carbon tetrachloride		BRL	1.24	BRL	7.80	"	"	"	"	
1,2-Dichloropropane		BRL	1.24	BRL	5.73	"	"	"	"	
Trichloroethene		47.8	1.24	256.89	6.66	"	"	"	"	
cis-1,3-Dichloropropene		BRL	1.24	BRL	5.63	"	"	"	"	
trans-1,3-Dichloropropene		BRL	1.24	BRL	5.63	"	"	"	"	
1,1,2-Trichloroethane		BRL	1.24	BRL	6.77	"	"	"	"	
Tetrachloroethene		11.3	1.24	76.63	8.41	"	"	"	"	
Chlorobenzene		BRL	1.24	BRL	5.71	"	"	"	"	
1,1,2,2-Tetrachloroethane		BRL	1.24	BRL	8.52	"	"	"	"	
1,3-Dichlorobenzene		BRL	1.24	BRL	7.46	"	"	"	"	
1,4-Dichlorobenzene		1.71	1.24	10.28	7.46	"	"	"	"	
1,2-Dichlorobenzene		BRL	1.24	BRL	7.46	"	"	"	"	
Hexachlorobutadiene		BRL	1.24	BRL	13.22	"	"	"	"	
Surrogate: 4-Bromofluorobenzene	*99.2*		*75-125 %*			"	"	"	"	

Sample Identification	Client Project #	Matrix	Collection Date/Time	Received
ASMP-2 SA16775-09	0016718	Air	18-Aug-04 09:23	19-Aug-04

Analyte(s)	*Result*	*Units*	**RDL*	*Result ug/m³*	**RDL*	*Method Ref.*	*Analyzed*	*Batch*	*Analyst*	*Flag*
Air Quality Analyses										
Chlorinated VOCs by EPA TO-14		*ppbv*								
Chloromethane	BRL		48.4	BRL	99.97	Mod. EPA TO-14A	21-Aug-04	4081299	WB	
Vinyl chloride	BRL		48.4	BRL	123.72	"	"	"	"	
Chloroethane	BRL		48.4	BRL	127.68	"	"	"	"	
1,1-Dichloroethene	101		48.4	400.70	192.02	"	"	"	"	
Methylene chloride	BRL		48.4	BRL	168.06	"	"	"	"	
1,1-Dichloroethane	585		48.4	2,368.71	195.98	"	"	"	"	
cis-1,2-Dichloroethene	BRL		48.4	BRL	191.92	"	"	"	"	
Chloroform	BRL		48.4	BRL	235.57	"	"	"	"	
1,2-Dichloroethane	BRL		48.4	BRL	195.98	"	"	"	"	
1,1,1-Trichloroethane	5680		48.4	30,990.27	264.07	"	"	"	"	
Carbon tetrachloride	BRL		48.4	BRL	304.45	"	"	"	"	
1,2-Dichloropropane	BRL		48.4	BRL	223.69	"	"	"	"	
Trichloroethene	68.7		48.4	369.21	260.11	"	"	"	"	
cis-1,3-Dichloropropene	BRL		48.4	BRL	219.73	"	"	"	"	
trans-1,3-Dichloropropene	BRL		48.4	BRL	219.73	"	"	"	"	
1,1,2-Trichloroethane	BRL		48.4	BRL	264.07	"	"	"	"	
Tetrachloroethene	BRL		48.4	BRL	328.21	"	"	"	"	
Chlorobenzene	BRL		48.4	BRL	222.90	"	"	"	"	
1,1,2,2-Tetrachloroethane	BRL		48.4	BRL	332.37	"	"	"	"	
1,3-Dichlorobenzene	BRL		48.4	BRL	290.99	"	"	"	"	
1,4-Dichlorobenzene	BRL		48.4	BRL	290.99	"	"	"	"	
1,2-Dichlorobenzene	BRL		48.4	BRL	290.99	"	"	"	"	
Hexachlorobutadiene	BRL		48.4	BRL	516.07	"	"	"	"	
Surrogate: 4-Bromofluorobenzene	*100*		*75-125 %*			"	"	"	"	

Sample Identification	Client Project #	Matrix	Collection Date/Time	Received
ERM-13 SA16775-10	0016718	Air	18-Aug-04 08:50	19-Aug-04

Analyte(s)	*Result*	*Units*	**RDL*	*Result ug/m³*	**RDL*	*Method Ref.*	*Analyzed*	*Batch*	*Analyst*	*Flag*
Air Quality Analyses										
Chlorinated VOCs by EPA TO-14		*ppbv*								
Chloromethane	BRL		250	BRL	516.36	Mod. EPA TO-14A	20-Aug-04	4081294	WB	
Vinyl chloride	BRL		250	BRL	639.06	"	"	"	"	
Chloroethane	BRL		250	BRL	659.51	"	"	"	"	
1,1-Dichloroethene	1620		250	6,426.99	991.82	"	"	"	"	
Methylene chloride	BRL		250	BRL	868.10	"	"	"	"	
1,1-Dichloroethane	455		250	1,842.33	1,012.27	"	"	"	"	
cis-1,2-Dichloroethene	310		250	1,229.22	991.31	"	"	"	"	
Chloroform	BRL		250	BRL	1,216.77	"	"	"	"	
1,2-Dichloroethane	BRL		250	BRL	1,012.27	"	"	"	"	
1,1,1-Trichloroethane	45700		250	249,340.70	1,364.01	"	"	"	"	
Carbon tetrachloride	BRL		250	BRL	1,572.60	"	"	"	"	
1,2-Dichloropropane	BRL		250	BRL	1,155.42	"	"	"	"	
Trichloroethene	1460		250	7,846.38	1,343.56	"	"	"	"	
cis-1,3-Dichloropropene	BRL		250	BRL	1,134.97	"	"	"	"	
trans-1,3-Dichloropropene	BRL		250	BRL	1,134.97	"	"	"	"	
1,1,2-Trichloroethane	BRL		250	BRL	1,364.01	"	"	"	"	
Tetrachloroethene	BRL		250	BRL	1,695.30	"	"	"	"	
Chlorobenzene	BRL		250	BRL	1,151.33	"	"	"	"	
1,1,2,2-Tetrachloroethane	BRL		250	BRL	1,716.77	"	"	"	"	
1,3-Dichlorobenzene	BRL		250	BRL	1,503.07	"	"	"	"	
1,4-Dichlorobenzene	BRL		250	BRL	1,503.07	"	"	"	"	
1,2-Dichlorobenzene	BRL		250	BRL	1,503.07	"	"	"	"	
Hexachlorobutadiene	BRL		250	BRL	2,665.64	"	"	"	"	
Surrogate: 4-Bromofluorobenzene	*95.2*		*75-125 %*			"	20-Aug-04	"	"	

This laboratory report is not valid without an authorized signature on the cover page.

*Reportable Detection Limit BRL = Below Reporting Limit

Sample Identification	Client Project #	Matrix	Collection Date/Time	Received
IND-1 SA16775-11	0016718	Air	17-Aug-04 08:08	19-Aug-04

Analyte(s)	*Result*	*Units*	**RDL*	*Result ug/m³*	**RDL*	*Method Ref.*	*Analyzed*	*Batch*	*Analyst*	*Flag*
Air Quality Analyses										
Modified EPA TO-14A		*ppbv*								
Dichlorodifluoromethane (Freon12)	BRL		1.18	BRL	5.83	Mod. EPA TO-14A	21-Aug-04	4081299	WB	
Chloromethane	BRL		1.18	BRL	2.44	"	"	"	"	
1,2-Dichlorotetrafluoroethane (Freon 114)	BRL		1.18	BRL	8.25	"	"	"	"	
Vinyl chloride	BRL		1.18	BRL	3.02	"	"	"	"	
Bromomethane	BRL		1.18	BRL	4.58	"	"	"	"	
Chloroethane	BRL		1.18	BRL	3.11	"	"	"	"	
Trichlorofluoromethane (Freon 11)	BRL		1.18	BRL	6.63	"	"	"	"	
1,1-Dichloroethene	BRL		1.18	BRL	4.68	"	"	"	"	
Methylene chloride	97.9		1.18	339.95	4.10	"	"	"	"	
1,1,2-Trichlorotrifluoroethane (Freon 113)	1.25		1.18	9.58	9.04	"	"	"	"	
1,1-Dichloroethane	BRL		1.18	BRL	4.78	"	"	"	"	
cis-1,2-Dichloroethene	BRL		1.18	BRL	4.68	"	"	"	"	
Chloroform	BRL		1.18	BRL	5.74	"	"	"	"	
1,2-Dichloroethane	BRL		1.18	BRL	4.78	"	"	"	"	
1,1,1-Trichloroethane	1.91		1.18	10.42	6.44	"	"	"	"	
Benzene	BRL		1.18	BRL	3.76	"	"	"	"	
Carbon tetrachloride	BRL		1.18	BRL	7.42	"	"	"	"	
1,2-Dichloropropane	BRL		1.18	BRL	5.45	"	"	"	"	
Trichloroethene	BRL		1.18	BRL	6.34	"	"	"	"	
cis-1,3-Dichloropropene	BRL		1.18	BRL	5.36	"	"	"	"	
trans-1,3-Dichloropropene	BRL		1.18	BRL	5.36	"	"	"	"	
1,1,2-Trichloroethane	BRL		1.18	BRL	6.44	"	"	"	"	
Toluene	28.8		1.18	108.37	4.44	"	"	"	"	
1,2-Dibromoethane (EDB)	BRL		1.18	BRL	9.07	"	"	"	"	
Tetrachloroethene	15.2		1.18	103.07	8.00	"	"	"	"	
Chlorobenzene	BRL		1.18	BRL	5.43	"	"	"	"	
Ethylbenzene	19.7		1.18	85.41	5.12	"	"	"	"	
m,p-Xylene	66.0		1.18	286.13	5.12	"	"	"	"	
Styrene	10.3		1.18	43.81	5.02	"	"	"	"	
o-Xylene	21.1		1.18	91.48	5.12	"	"	"	"	
1,1,2,2-Tetrachloroethane	BRL		1.18	BRL	8.10	"	"	"	"	
1,3,5-Trimethylbenzene	3.23		1.18	15.88	5.80	"	"	"	"	
4-Ethyltoluene	2.90		1.18	14.26	5.80	"	"	"	"	
1,2,4-Trimethylbenzene	10.2		1.18	50.14	5.80	"	"	"	"	
1,3-Dichlorobenzene	BRL		1.18	BRL	7.09	"	"	"	"	
Benzyl chloride	BRL		1.18	BRL	6.08	"	"	"	"	
1,4-Dichlorobenzene	7.72		1.18	46.41	7.09	"	"	"	"	
1,2-Dichlorobenzene	BRL		1.18	BRL	7.09	"	"	"	"	
1,2,4-Trichlorobenzene	BRL		1.18	BRL	8.76	"	"	"	"	
Hexachlorobutadiene	BRL		1.18	BRL	12.58	"	"	"	"	
Surrogate: 4-Bromofluorobenzene	*111*		*75-125 %*			"	"	"	"	

Sample Identification	Client Project #	Matrix	Collection Date/Time	Received
IND-2 SA16775-12	0016718	Air	17-Aug-04 08:12	19-Aug-04

Analyte(s)	*Result Units*	**RDL*	*Result ug/m³*	**RDL*	*Method Ref.*	*Analyzed*	*Batch*	*Analyst*	*Flag*
Air Quality Analyses									
Modified EPA TO-14A	*ppbv*								
Dichlorodifluoromethane (Freon12)	BRL	0.590	BRL	2.92	Mod. EPA TO-14A	21-Aug-04	4081299	WB	
Chloromethane	0.637	0.590	1.32	1.22	"	"	"	"	
1,2-Dichlorotetrafluoroethane (Freon 114)	BRL	0.590	BRL	4.12	"	"	"	"	
Vinyl chloride	BRL	0.590	BRL	1.51	"	"	"	"	
Bromomethane	BRL	0.590	BRL	2.29	"	"	"	"	
Chloroethane	BRL	0.590	BRL	1.56	"	"	"	"	
Trichlorofluoromethane (Freon 11)	BRL	0.590	BRL	3.32	"	"	"	"	
1,1-Dichloroethene	BRL	0.590	BRL	2.34	"	"	"	"	
Methylene chloride	66.5	0.590	230.91	2.05	"	"	"	"	
1,1,2-Trichlorotrifluoroethane (Freon 113)	BRL	0.590	BRL	4.52	"	"	"	"	
1,1-Dichloroethane	BRL	0.590	BRL	2.39	"	"	"	"	
cis-1,2-Dichloroethene	BRL	0.590	BRL	2.34	"	"	"	"	
Chloroform	BRL	0.590	BRL	2.87	"	"	"	"	
1,2-Dichloroethane	BRL	0.590	BRL	2.39	"	"	"	"	
1,1,1-Trichloroethane	1.05	0.590	5.73	3.22	"	"	"	"	
Benzene	BRL	0.590	BRL	1.88	"	"	"	"	
Carbon tetrachloride	BRL	0.590	BRL	3.71	"	"	"	"	
1,2-Dichloropropane	BRL	0.590	BRL	2.73	"	"	"	"	
Trichloroethene	BRL	0.590	BRL	3.17	"	"	"	"	
cis-1,3-Dichloropropene	BRL	0.590	BRL	2.68	"	"	"	"	
trans-1,3-Dichloropropene	BRL	0.590	BRL	2.68	"	"	"	"	
1,1,2-Trichloroethane	BRL	0.590	BRL	3.22	"	"	"	"	
Toluene	17.4	0.590	65.47	2.22	"	"	"	"	
1,2-Dibromoethane (EDB)	BRL	0.590	BRL	4.53	"	"	"	"	
Tetrachloroethene	10.8	0.590	73.24	4.00	"	"	"	"	
Chlorobenzene	BRL	0.590	BRL	2.72	"	"	"	"	
Ethylbenzene	4.47	0.590	19.38	2.56	"	"	"	"	
m,p-Xylene	14.6	0.590	63.30	2.56	"	"	"	"	
Styrene	3.08	0.590	13.10	2.51	"	"	"	"	
o-Xylene	3.72	0.590	16.13	2.56	"	"	"	"	
1,1,2,2-Tetrachloroethane	BRL	0.590	BRL	4.05	"	"	"	"	
1,3,5-Trimethylbenzene	1.45	0.590	7.13	2.90	"	"	"	"	
4-Ethyltoluene	1.62	0.590	7.96	2.90	"	"	"	"	
1,2,4-Trimethylbenzene	6.22	0.590	30.58	2.90	"	"	"	"	
1,3-Dichlorobenzene	BRL	0.590	BRL	3.55	"	"	"	"	
Benzyl chloride	BRL	0.590	BRL	3.04	"	"	"	"	
1,4-Dichlorobenzene	7.58	0.590	45.57	3.55	"	"	"	"	
1,2-Dichlorobenzene	BRL	0.590	BRL	3.55	"	"	"	"	
1,2,4-Trichlorobenzene	BRL	0.590	BRL	4.38	"	"	"	"	
Hexachlorobutadiene	BRL	0.590	BRL	6.29	"	"	"	"	
Surrogate: 4-Bromofluorobenzene	*99.2*	*75-125 %*			"	"	"	"	

This laboratory report is not valid without an authorized signature on the cover page.

*Reportable Detection Limit BRL = Below Reporting Limit

Air Quality Analyses - Quality Control

Analyte(s)	Result	*RDL	Units	Spike Level	Source Result	%REC	%REC Limits	RPD	RPD Limit	Flag
Batch 4081294 - General Air Prep										
Blank (4081294-BLK1)				Prepared & Analyzed: 19-Aug-04						
Chloromethane	BRL	0.500	ppbv							
Vinyl chloride	BRL	0.500	ppbv							
Chloroethane	BRL	0.500	ppbv							
1,1-Dichloroethene	BRL	0.500	ppbv							
Methylene chloride	BRL	0.500	ppbv							
1,1-Dichloroethane	BRL	0.500	ppbv							
cis-1,2-Dichloroethene	BRL	0.500	ppbv							
Chloroform	BRL	0.500	ppbv							
1,2-Dichloroethane	BRL	0.500	ppbv							
1,1,1-Trichloroethane	BRL	0.500	ppbv							
Carbon tetrachloride	BRL	0.500	ppbv							
1,2-Dichloropropane	BRL	0.500	ppbv							
Trichloroethene	BRL	0.500	ppbv							
cis-1,3-Dichloropropene	BRL	0.500	ppbv							
trans-1,3-Dichloropropene	BRL	0.500	ppbv							
1,1,2-Trichloroethane	BRL	0.500	ppbv							
Tetrachloroethene	BRL	0.500	ppbv							
Chlorobenzene	BRL	0.500	ppbv							
1,1,2,2-Tetrachloroethane	BRL	0.500	ppbv							
1,3-Dichlorobenzene	BRL	0.500	ppbv							
1,4-Dichlorobenzene	BRL	0.500	ppbv							
1,2-Dichlorobenzene	BRL	0.500	ppbv							
Hexachlorobutadiene	BRL	0.500	ppbv							
Surrogate: 4-Bromofluorobenzene	*11.7*		ppbv	*12.5*		*93.6*	*75-125*			
LCS (4081294-BS1)				Prepared & Analyzed: 19-Aug-04						
Chloromethane	7.50		ppbv	10.0		75.0	70-130			
Vinyl chloride	8.64		ppbv	10.0		86.4	70-130			
Chloroethane	9.57		ppbv	10.0		95.7	70-130			
1,1-Dichloroethene	9.40		ppbv	10.0		94.0	70-130			
Methylene chloride	9.32		ppbv	10.0		93.2	70-130			
1,1-Dichloroethane	9.43		ppbv	10.0		94.3	70-130			
cis-1,2-Dichloroethene	9.47		ppbv	10.0		94.7	70-130			
Chloroform	9.28		ppbv	10.0		92.8	70-130			
1,2-Dichloroethane	9.14		ppbv	10.0		91.4	70-130			
1,1,1-Trichloroethane	9.81		ppbv	10.0		98.1	70-130			
Carbon tetrachloride	9.61		ppbv	10.0		96.1	70-130			
1,2-Dichloropropane	9.68		ppbv	10.0		96.8	70-130			
Trichloroethene	9.78		ppbv	10.0		97.8	70-130			
cis-1,3-Dichloropropene	9.94		ppbv	10.0		99.4	70-130			
trans-1,3-Dichloropropene	8.93		ppbv	10.0		89.3	70-130			
1,1,2-Trichloroethane	9.38		ppbv	10.0		93.8	70-130			
Tetrachloroethene	9.04		ppbv	10.0		90.4	70-130			
Chlorobenzene	9.75		ppbv	10.0		97.5	70-130			
1,1,2,2-Tetrachloroethane	11.0		ppbv	10.0		110	70-130			
1,3-Dichlorobenzene	10.4		ppbv	10.0		104	70-130			
1,4-Dichlorobenzene	10.2		ppbv	10.0		102	70-130			
1,2-Dichlorobenzene	10.1		ppbv	10.0		101	70-130			
Hexachlorobutadiene	8.45		ppbv	10.0		84.5	70-130			
Surrogate: 4-Bromofluorobenzene	*12.3*		ppbv	*12.5*		*98.4*	*75-125*			
Duplicate (4081294-DUP1)		Source: SA16775-10		Prepared: 19-Aug-04 Analyzed: 20-Aug-04						
Chloromethane	BRL	250	ppbv		BRL				30	
Vinyl chloride	BRL	250	ppbv		BRL				30	
Chloroethane	BRL	250	ppbv		BRL				30	

This laboratory report is not valid without an authorized signature on the cover page.

*Reportable Detection Limit BRL = Below Reporting Limit

Air Quality Analyses - Quality Control

Analyte(s)	Result	*RDL	Units	Spike Level	Source Result	%REC	%REC Limits	RPD	RPD Limit	Flag
Batch 4081294 - General Air Prep										
Duplicate (4081294-DUP1)		**Source: SA16775-10**		Prepared: 19-Aug-04 Analyzed: 20-Aug-04						
1,1-Dichloroethene	1620	250	ppbv		1620			0.00	30	
Methylene chloride	BRL	250	ppbv		BRL				30	
1,1-Dichloroethane	455	250	ppbv		455			0.00	30	
cis-1,2-Dichloroethene	310	250	ppbv		310			0.00	30	
Chloroform	BRL	250	ppbv		BRL				30	
1,2-Dichloroethane	BRL	250	ppbv		BRL				30	
1,1,1-Trichloroethane	45700	250	ppbv		45700			0.00	30	
Carbon tetrachloride	BRL	250	ppbv		BRL				30	
1,2-Dichloropropane	BRL	250	ppbv		BRL				30	
Trichloroethene	1460	250	ppbv		1460			0.00	30	
cis-1,3-Dichloropropene	BRL	250	ppbv		BRL				30	
trans-1,3-Dichloropropene	BRL	250	ppbv		BRL				30	
1,1,2-Trichloroethane	BRL	250	ppbv		BRL				30	
Tetrachloroethene	220	250	ppbv		220			0.00	30	
Chlorobenzene	BRL	250	ppbv		BRL				30	
1,1,2,2-Tetrachloroethane	BRL	250	ppbv		BRL				30	
1,3-Dichlorobenzene	BRL	250	ppbv		BRL				30	
1,4-Dichlorobenzene	BRL	250	ppbv		BRL				30	
1,2-Dichlorobenzene	BRL	250	ppbv		BRL				30	
Hexachlorobutadiene	BRL	250	ppbv		BRL				30	
Surrogate: 4-Bromofluorobenzene	*11.7*		ppbv	*12.5*		*93.6*	*75-125*			
Batch 4081299 - General Air Prep										
Blank (4081299-BLK1)				Prepared & Analyzed: 20-Aug-04						
Dichlorodifluoromethane (Freon12)	BRL	0.500	ppbv							
Chloromethane	BRL	0.500	ppbv							
Chloromethane	BRL	0.500	ppbv							
1,2-Dichlorotetrafluoroethane (Freon 114)	BRL	0.500	ppbv							
Vinyl chloride	BRL	0.500	ppbv							
Vinyl chloride	BRL	0.500	ppbv							
Bromomethane	BRL	0.500	ppbv							
Chloroethane	BRL	0.500	ppbv							
Chloroethane	BRL	0.500	ppbv							
Trichlorofluoromethane (Freon 11)	BRL	0.500	ppbv							
1,1-Dichloroethene	BRL	0.500	ppbv							
1,1-Dichloroethene	BRL	0.500	ppbv							
Methylene chloride	BRL	0.500	ppbv							
Methylene chloride	BRL	0.500	ppbv							
1,1,2-Trichlorotrifluoroethane (Freon 113)	BRL	0.500	ppbv							
1,1-Dichloroethane	BRL	0.500	ppbv							
1,1-Dichloroethane	BRL	0.500	ppbv							
cis-1,2-Dichloroethene	BRL	0.500	ppbv							
cis-1,2-Dichloroethene	BRL	0.500	ppbv							
Chloroform	BRL	0.500	ppbv							
Chloroform	BRL	0.500	ppbv							
1,2-Dichloroethane	BRL	0.500	ppbv							
1,2-Dichloroethane	BRL	0.500	ppbv							
1,1,1-Trichloroethane	BRL	0.500	ppbv							
1,1,1-Trichloroethane	BRL	0.500	ppbv							
Benzene	BRL	0.500	ppbv							
Carbon tetrachloride	BRL	0.500	ppbv							
Carbon tetrachloride	BRL	0.500	ppbv							
1,2-Dichloropropane	BRL	0.500	ppbv							
1,2-Dichloropropane	BRL	0.500	ppbv							

Air Quality Analyses - Quality Control

Analyte(s)	Result	*RDL	Units	Spike Level	Source Result	%REC	%REC Limits	RPD	RPD Limit	Flag
Batch 4081299 - General Air Prep										
Blank (4081299-BLK1)				Prepared & Analyzed: 20-Aug-04						
Trichloroethene	BRL	0.500	ppbv							
Trichloroethene	BRL	0.500	ppbv							
cis-1,3-Dichloropropene	BRL	0.500	ppbv							
cis-1,3-Dichloropropene	BRL	0.500	ppbv							
trans-1,3-Dichloropropene	BRL	0.500	ppbv							
trans-1,3-Dichloropropene	BRL	0.500	ppbv							
1,1,2-Trichloroethane	BRL	0.500	ppbv							
1,1,2-Trichloroethane	BRL	0.500	ppbv							
Toluene	BRL	0.500	ppbv							
1,2-Dibromoethane (EDB)	BRL	0.500	ppbv							
Tetrachloroethene	BRL	0.500	ppbv							
Tetrachloroethene	BRL	0.500	ppbv							
Chlorobenzene	BRL	0.500	ppbv							
Chlorobenzene	BRL	0.500	ppbv							
Ethylbenzene	BRL	0.500	ppbv							
m,p-Xylene	BRL	0.500	ppbv							
Styrene	BRL	0.500	ppbv							
o-Xylene	BRL	0.500	ppbv							
1,1,2,2-Tetrachloroethane	BRL	0.500	ppbv							
1,1,2,2-Tetrachloroethane	BRL	0.500	ppbv							
1,3,5-Trimethylbenzene	BRL	0.500	ppbv							
4-Ethyltoluene	BRL	0.500	ppbv							
1,2,4-Trimethylbenzene	BRL	0.500	ppbv							
1,3-Dichlorobenzene	BRL	0.500	ppbv							
1,3-Dichlorobenzene	BRL	0.500	ppbv							
Benzyl chloride	BRL	0.500	ppbv							
1,4-Dichlorobenzene	BRL	0.500	ppbv							
1,4-Dichlorobenzene	BRL	0.500	ppbv							
1,2-Dichlorobenzene	BRL	0.500	ppbv							
1,2-Dichlorobenzene	BRL	0.500	ppbv							
1,2,4-Trichlorobenzene	BRL	0.500	ppbv							
Hexachlorobutadiene	BRL	0.500	ppbv							
Hexachlorobutadiene	BRL	0.500	ppbv							
Surrogate: 4-Bromofluorobenzene	*12.1*		ppbv	*12.5*		*96.8*	*75-125*			
Surrogate: 4-Bromofluorobenzene	*12.1*		ppbv	*12.5*		*96.8*	*75-125*			
LCS (4081299-BS1)				Prepared & Analyzed: 20-Aug-04						
Dichlorodifluoromethane (Freon12)	9.33		ppbv	10.0		93.3	70-130			
Chloromethane	7.90		ppbv	10.0		79.0	70-130			
Chloromethane	7.90		ppbv	10.0		79.0	70-130			
1,2-Dichlorotetrafluoroethane (Freon 114)	9.10		ppbv	10.0		91.0	70-130			
Vinyl chloride	8.99		ppbv	10.0		89.9	70-130			
Vinyl chloride	8.99		ppbv	10.0		89.9	70-130			
Bromomethane	9.38		ppbv	10.0		93.8	70-130			
Chloroethane	9.96		ppbv	10.0		99.6	70-130			
Chloroethane	9.96		ppbv	10.0		99.6	70-130			
Trichlorofluoromethane (Freon 11)	9.55		ppbv	10.0		95.5	70-130			
1,1-Dichloroethene	9.67		ppbv	10.0		96.7	70-130			
1,1-Dichloroethene	9.67		ppbv	10.0		96.7	70-130			
Methylene chloride	9.58		ppbv	10.0		95.8	70-130			
Methylene chloride	9.58		ppbv	10.0		95.8	70-130			
1,1,2-Trichlorotrifluoroethane (Freon 113)	9.57		ppbv	10.0		95.7	70-130			
1,1-Dichloroethane	9.70		ppbv	10.0		97.0	70-130			
1,1-Dichloroethane	9.70		ppbv	10.0		97.0	70-130			
cis-1,2-Dichloroethene	9.76		ppbv	10.0		97.6	70-130			

Air Quality Analyses - Quality Control

Analyte(s)	Result	*RDL	Units	Spike Level	Source Result	%REC	%REC Limits	RPD	RPD Limit	Flag
Batch 4081299 - General Air Prep										
LCS (4081299-BS1)				Prepared & Analyzed: 20-Aug-04						
cis-1,2-Dichloroethene	9.76		ppbv	10.0		97.6	70-130			
Chloroform	9.44		ppbv	10.0		94.4	70-130			
Chloroform	9.44		ppbv	10.0		94.4	70-130			
1,2-Dichloroethane	9.43		ppbv	10.0		94.3	70-130			
1,2-Dichloroethane	9.43		ppbv	10.0		94.3	70-130			
1,1,1-Trichloroethane	9.94		ppbv	10.0		99.4	70-130			
1,1,1-Trichloroethane	9.94		ppbv	10.0		99.4	70-130			
Benzene	9.69		ppbv	10.0		96.9	70-130			
Carbon tetrachloride	9.52		ppbv	10.0		95.2	70-130			
Carbon tetrachloride	9.52		ppbv	10.0		95.2	70-130			
1,2-Dichloropropane	10.2		ppbv	10.0		102	70-130			
1,2-Dichloropropane	10.2		ppbv	10.0		102	70-130			
Trichloroethene	10.0		ppbv	10.0		100	70-130			
Trichloroethene	10.0		ppbv	10.0		100	70-130			
cis-1,3-Dichloropropene	10.4		ppbv	10.0		104	70-130			
cis-1,3-Dichloropropene	10.4		ppbv	10.0		104	70-130			
trans-1,3-Dichloropropene	9.18		ppbv	10.0		91.8	70-130			
trans-1,3-Dichloropropene	9.18		ppbv	10.0		91.8	70-130			
1,1,2-Trichloroethane	9.60		ppbv	10.0		96.0	70-130			
1,1,2-Trichloroethane	9.60		ppbv	10.0		96.0	70-130			
Toluene	9.11		ppbv	10.0		91.1	70-130			
1,2-Dibromoethane (EDB)	9.53		ppbv	10.0		95.3	70-130			
Tetrachloroethene	9.32		ppbv	10.0		93.2	70-130			
Tetrachloroethene	9.32		ppbv	10.0		93.2	70-130			
Chlorobenzene	9.78		ppbv	10.0		97.8	70-130			
Chlorobenzene	9.78		ppbv	10.0		97.8	70-130			
Ethylbenzene	10.1		ppbv	10.0		101	70-130			
m,p-Xylene	21.4		ppbv	20.0		107	70-130			
Styrene	12.3		ppbv	10.0		123	70-130			
o-Xylene	11.0		ppbv	10.0		110	70-130			
1,1,2,2-Tetrachloroethane	11.1		ppbv	10.0		111	70-130			
1,1,2,2-Tetrachloroethane	11.1		ppbv	10.0		111	70-130			
1,3,5-Trimethylbenzene	12.5		ppbv	10.0		125	70-130			
4-Ethyltoluene	10.8		ppbv	10.0		108	70-130			
1,2,4-Trimethylbenzene	11.2		ppbv	10.0		112	70-130			
1,3-Dichlorobenzene	10.4		ppbv	10.0		104	70-130			
1,3-Dichlorobenzene	10.4		ppbv	10.0		104	70-130			
Benzyl chloride	12.2		ppbv	10.0		122	70-130			
1,4-Dichlorobenzene	10.3		ppbv	10.0		103	70-130			
1,4-Dichlorobenzene	10.3		ppbv	10.0		103	70-130			
1,2-Dichlorobenzene	10.2		ppbv	10.0		102	70-130			
1,2-Dichlorobenzene	10.2		ppbv	10.0		102	70-130			
1,2,4-Trichlorobenzene	8.58		ppbv	10.0		85.8	70-130			
Hexachlorobutadiene	8.54		ppbv	10.0		85.4	70-130			
Hexachlorobutadiene	8.54		ppbv	10.0		85.4	70-130			
Surrogate: 4-Bromofluorobenzene	*12.2*		ppbv	*12.5*		*97.6*	*75-125*			
Surrogate: 4-Bromofluorobenzene	*12.2*		ppbv	*12.5*		*97.6*	*75-125*			
Duplicate (4081299-DUP1)		Source: SA16775-12		Prepared: 20-Aug-04 Analyzed: 21-Aug-04						
Dichlorodifluoromethane (Freon12)	BRL	0.590	ppbv		BRL				30	
Chloromethane	0.673	0.590	ppbv		0.637			5.50	30	
Chloromethane	0.673	0.590	ppbv		0.637			5.50	30	
1,2-Dichlorotetrafluoroethane (Freon 114)	BRL	0.590	ppbv		BRL				30	
Vinyl chloride	BRL	0.590	ppbv		BRL				30	
Vinyl chloride	BRL	0.590	ppbv		BRL				30	

This laboratory report is not valid without an authorized signature on the cover page.

*Reportable Detection Limit BRL = Below Reporting Limit

Air Quality Analyses - Quality Control

Analyte(s)	Result	*RDL	Units	Spike Level	Source Result	%REC	%REC Limits	RPD	RPD Limit	Flag
Batch 4081299 - General Air Prep										
Duplicate (4081299-DUP1)		**Source: SA16775-12**		Prepared: 20-Aug-04 Analyzed: 21-Aug-04						
Bromomethane	BRL	0.590	ppbv		BRL				30	
Chloroethane	BRL	0.590	ppbv		BRL				30	
Chloroethane	BRL	0.590	ppbv		BRL				30	
Trichlorofluoromethane (Freon 11)	BRL	0.590	ppbv		BRL				30	
1,1-Dichloroethene	BRL	0.590	ppbv		BRL				30	
1,1-Dichloroethene	BRL	0.590	ppbv		BRL				30	
Methylene chloride	67.8	0.590	ppbv		66.5			1.94	30	
Methylene chloride	67.8	0.590	ppbv		66.5			1.94	30	
1,1,2-Trichlorotrifluoroethane (Freon 113)	0.354	0.590	ppbv		0.354			0.00	30	
1,1-Dichloroethane	BRL	0.590	ppbv		BRL				30	
1,1-Dichloroethane	BRL	0.590	ppbv		BRL				30	
cis-1,2-Dichloroethene	BRL	0.590	ppbv		BRL				30	
cis-1,2-Dichloroethene	BRL	0.590	ppbv		BRL				30	
Chloroform	BRL	0.590	ppbv		BRL				30	
Chloroform	BRL	0.590	ppbv		BRL				30	
1,2-Dichloroethane	BRL	0.590	ppbv		BRL				30	
1,2-Dichloroethane	BRL	0.590	ppbv		BRL				30	
1,1,1-Trichloroethane	1.09	0.590	ppbv		1.05			3.74	30	
1,1,1-Trichloroethane	1.09	0.590	ppbv		1.05			3.74	30	
Benzene	0.307	0.590	ppbv		0.295			3.99	30	
Carbon tetrachloride	BRL	0.590	ppbv		BRL				30	
Carbon tetrachloride	BRL	0.590	ppbv		BRL				30	
1,2-Dichloropropane	BRL	0.590	ppbv		BRL				30	
1,2-Dichloropropane	BRL	0.590	ppbv		BRL				30	
Trichloroethene	BRL	0.590	ppbv		BRL				30	
Trichloroethene	BRL	0.590	ppbv		BRL				30	
cis-1,3-Dichloropropene	BRL	0.590	ppbv		BRL				30	
cis-1,3-Dichloropropene	BRL	0.590	ppbv		BRL				30	
trans-1,3-Dichloropropene	BRL	0.590	ppbv		BRL				30	
trans-1,3-Dichloropropene	BRL	0.590	ppbv		BRL				30	
1,1,2-Trichloroethane	BRL	0.590	ppbv		BRL				30	
1,1,2-Trichloroethane	BRL	0.590	ppbv		BRL				30	
Toluene	17.8	0.590	ppbv		17.4			2.27	30	
1,2-Dibromoethane (EDB)	BRL	0.590	ppbv		BRL				30	
Tetrachloroethene	11.0	0.590	ppbv		10.8			1.83	30	
Tetrachloroethene	11.0	0.590	ppbv		10.8			1.83	30	
Chlorobenzene	BRL	0.590	ppbv		BRL				30	
Chlorobenzene	BRL	0.590	ppbv		BRL				30	
Ethylbenzene	4.57	0.590	ppbv		4.47			2.21	30	
m,p-Xylene	14.8	0.590	ppbv		14.6			1.36	30	
Styrene	3.12	0.590	ppbv		3.08			1.29	30	
o-Xylene	3.78	0.590	ppbv		3.72			1.60	30	
1,1,2,2-Tetrachloroethane	0.472	0.590	ppbv		0.460			2.58	30	
1,1,2,2-Tetrachloroethane	0.472	0.590	ppbv		0.460			2.58	30	
1,3,5-Trimethylbenzene	1.49	0.590	ppbv		1.45			2.72	30	
4-Ethyltoluene	1.65	0.590	ppbv		1.62			1.83	30	
1,2,4-Trimethylbenzene	6.37	0.590	ppbv		6.22			2.38	30	
1,3-Dichlorobenzene	BRL	0.590	ppbv		BRL				30	
1,3-Dichlorobenzene	BRL	0.590	ppbv		BRL				30	
Benzyl chloride	BRL	0.590	ppbv		BRL				30	
1,4-Dichlorobenzene	7.68	0.590	ppbv		7.58			1.31	30	
1,4-Dichlorobenzene	7.68	0.590	ppbv		7.58			1.31	30	
1,2-Dichlorobenzene	BRL	0.590	ppbv		BRL				30	
1,2-Dichlorobenzene	BRL	0.590	ppbv		BRL				30	
1,2,4-Trichlorobenzene	BRL	0.590	ppbv		BRL				30	

Air Quality Analyses - Quality Control

Analyte(s)	Result	*RDL	Units	Spike Level	Source Result	%REC	%REC Limits	RPD	RPD Limit	Flag
Batch 4081299 - General Air Prep										
Duplicate (4081299-DUP1)		Source: SA16775-12		Prepared: 20-Aug-04 Analyzed: 21-Aug-04						
Hexachlorobutadiene	BRL	0.590	ppbv		BRL				30	
Hexachlorobutadiene	BRL	0.590	ppbv		BRL				30	
Surrogate: 4-Bromofluorobenzene	*12.4*		ppbv	*12.5*		*99.2*	*75-125*			
Surrogate: 4-Bromofluorobenzene	*12.4*		ppbv	*12.5*		*99.2*	*75-125*			
Batch 4081440 - General Air Prep										
Blank (4081440-BLK1)				Prepared & Analyzed: 23-Aug-04						
Chloromethane	BRL	0.500	ppbv							
Vinyl chloride	BRL	0.500	ppbv							
Chloroethane	BRL	0.500	ppbv							
1,1-Dichloroethene	BRL	0.500	ppbv							
Methylene chloride	BRL	0.500	ppbv							
1,1-Dichloroethane	BRL	0.500	ppbv							
cis-1,2-Dichloroethene	BRL	0.500	ppbv							
Chloroform	BRL	0.500	ppbv							
1,2-Dichloroethane	BRL	0.500	ppbv							
1,1,1-Trichloroethane	BRL	0.500	ppbv							
Carbon tetrachloride	BRL	0.500	ppbv							
1,2-Dichloropropane	BRL	0.500	ppbv							
Trichloroethene	BRL	0.500	ppbv							
cis-1,3-Dichloropropene	BRL	0.500	ppbv							
trans-1,3-Dichloropropene	BRL	0.500	ppbv							
1,1,2-Trichloroethane	BRL	0.500	ppbv							
Tetrachloroethene	BRL	0.500	ppbv							
Chlorobenzene	BRL	0.500	ppbv							
1,1,2,2-Tetrachloroethane	BRL	0.500	ppbv							
1,3-Dichlorobenzene	BRL	0.500	ppbv							
1,4-Dichlorobenzene	BRL	0.500	ppbv							
1,2-Dichlorobenzene	BRL	0.500	ppbv							
Hexachlorobutadiene	BRL	0.500	ppbv							
Surrogate: 4-Bromofluorobenzene	*12.4*		ppbv	*12.5*		*99.2*	*75-125*			
LCS (4081440-BS1)				Prepared & Analyzed: 23-Aug-04						
Chloromethane	7.65		ppbv	10.0		76.5	70-130			
Vinyl chloride	9.00		ppbv	10.0		90.0	70-130			
Chloroethane	10.1		ppbv	10.0		101	70-130			
1,1-Dichloroethene	9.20		ppbv	10.0		92.0	70-130			
Methylene chloride	8.99		ppbv	10.0		89.9	70-130			
1,1-Dichloroethane	9.23		ppbv	10.0		92.3	70-130			
cis-1,2-Dichloroethene	9.30		ppbv	10.0		93.0	70-130			
Chloroform	8.88		ppbv	10.0		88.8	70-130			
1,2-Dichloroethane	8.75		ppbv	10.0		87.5	70-130			
1,1,1-Trichloroethane	10.0		ppbv	10.0		100	70-130			
Carbon tetrachloride	9.21		ppbv	10.0		92.1	70-130			
1,2-Dichloropropane	9.65		ppbv	10.0		96.5	70-130			
Trichloroethene	9.55		ppbv	10.0		95.5	70-130			
cis-1,3-Dichloropropene	9.86		ppbv	10.0		98.6	70-130			
trans-1,3-Dichloropropene	8.77		ppbv	10.0		87.7	70-130			
1,1,2-Trichloroethane	9.09		ppbv	10.0		90.9	70-130			
Tetrachloroethene	8.81		ppbv	10.0		88.1	70-130			
Chlorobenzene	8.75		ppbv	10.0		87.5	70-130			
1,1,2,2-Tetrachloroethane	9.85		ppbv	10.0		98.5	70-130			
1,3-Dichlorobenzene	9.14		ppbv	10.0		91.4	70-130			
1,4-Dichlorobenzene	9.05		ppbv	10.0		90.5	70-130			

Air Quality Analyses - Quality Control

Analyte(s)	Result	*RDL	Units	Spike Level	Source Result	%REC	%REC Limits	RPD	RPD Limit	Flag
Batch 4081440 - General Air Prep										
LCS (4081440-BS1)				Prepared & Analyzed: 23-Aug-04						
1,2-Dichlorobenzene	8.97		ppbv	10.0		89.7	70-130			
Hexachlorobutadiene	7.25		ppbv	10.0		72.5	70-130			
Surrogate: 4-Bromofluorobenzene	*12.7*		ppbv	*12.5*		*102*	*75-125*			
Duplicate (4081440-DUP1)		**Source: SA16775-02**		Prepared & Analyzed: 23-Aug-04						
Chloromethane	BRL	46.8	ppbv		BRL				30	
Vinyl chloride	BRL	46.8	ppbv		BRL				30	
Chloroethane	BRL	46.8	ppbv		BRL				30	
1,1-Dichloroethene	117	46.8	ppbv		122			4.18	30	
Methylene chloride	BRL	46.8	ppbv		BRL				30	
1,1-Dichloroethane	BRL	46.8	ppbv		BRL				30	
cis-1,2-Dichloroethene	BRL	46.8	ppbv		BRL				30	
Chloroform	BRL	46.8	ppbv		BRL				30	
1,2-Dichloroethane	BRL	46.8	ppbv		BRL				30	
1,1,1-Trichloroethane	2590	46.8	ppbv		2670			3.04	30	
Carbon tetrachloride	BRL	46.8	ppbv		BRL				30	
1,2-Dichloropropane	BRL	46.8	ppbv		BRL				30	
Trichloroethene	160	46.8	ppbv		166			3.68	30	
cis-1,3-Dichloropropene	BRL	46.8	ppbv		BRL				30	
trans-1,3-Dichloropropene	BRL	46.8	ppbv		BRL				30	
1,1,2-Trichloroethane	BRL	46.8	ppbv		BRL				30	
Tetrachloroethene	BRL	46.8	ppbv		BRL				30	
Chlorobenzene	BRL	46.8	ppbv		BRL				30	
1,1,2,2-Tetrachloroethane	BRL	46.8	ppbv		BRL				30	
1,3-Dichlorobenzene	BRL	46.8	ppbv		BRL				30	
1,4-Dichlorobenzene	BRL	46.8	ppbv		BRL				30	
1,2-Dichlorobenzene	BRL	46.8	ppbv		BRL				30	
Hexachlorobutadiene	BRL	46.8	ppbv		BRL				30	
Surrogate: 4-Bromofluorobenzene	*12.4*		ppbv	*12.5*		*99.2*	*75-125*			

Notes and Definitions

BRL	Below Reporting Limit - Analyte NOT DETECTED at or above the reporting limit
dry	Sample results reported on a dry weight basis
NR	Not Reported
RPD	Relative Percent Difference

A plus sign (+) in the Method Reference column indicates the method is not accredited by NELAC.

Laboratory Control Sample (LCS): A known matrix spiked with compound(s) representative of the target analytes, which is used to document laboratory performance.

Matrix Duplicate: An intra-laboratory split sample which is used to document the precision of a method in a given sample matrix.

Matrix Spike: An aliquot of a sample spiked with a known concentration of target analyte(s). The spiking occurs prior to sample preparation and analysis. A matrix spike is used to document the bias of a method in a given sample matrix.

Method Blank: An analyte-free matrix to which all reagents are added in the same volumes or proportions as used in sample processing. The method blank should be carried through the complete sample preparation and analytical procedure. The method blank is used to document contamination resulting from the analytical process.

Method Detection Limit (MDL): The minimum concentration of a substance that can be measured and reported with 99% confidence that the analyte concentration is greater than zero and is determined from analysis of a sample in a given matrix type containing the analyte.

Reportable Detection Limit (RDL): The lowest concentration that can be reliably achieved within specified limits of precision and accuracy during routine laboratory operating conditions. For many analytes the RDL analyte concentration is selected as the lowest non-zero standard in the calibration curve. While the RDL is approximately 5 to 10 times the MDL, the RDL for each sample takes into account the sample volume/weight, extract/digestate volume, cleanup procedures and, if applicable, dry weight correction. Sample RDLs are highly matrix-dependent.

Surrogate: An organic compound which is similar to the target analyte(s) in chemical composition and behavior in the analytical process, but which is not normally found in environmental samples. These compounds are spiked into all blanks, standards, and samples prior to analysis. Percent recoveries are calculated for each surrogate.

Validated by:
Hanibal C. Tayeh, Ph.D.
Dan DeAlmeida

8A16775

SPECTRUM ANALYTICAL, INC.
Featuring
HANIBAL TECHNOLOGY

CHAIN OF CUSTODY RECORD

Page 1 of 2

Special Handling:
- ☐ Standard TAT - 7 to 10 business days
- ☒ Rush TAT - Date Needed: 8/25/04
- All TATs subject to laboratory approval. Min. 24-hour notification needed for rushes.
- Samples disposed of after 60 days unless otherwise instructed.

Report To: ERM-New England, Inc.
Two Hartford Square West, Suite 300
146 Wyllys ST
Hartford CT 06106
Project Mgr.: Bob Drake

Invoice To: IWH4004013 (JB)
Same
P.O. No.: _____ RQN: _____

Project No.: 0016718
Site Name: Intelidata
Location: New Milford State: CT
Sampler(s): J. Fernet

1=Na_2S2O_3 2=HCl 3=H_2SO_4 4=HNO_3 5=NaOH 6=Ascorbic Acid
7=CH_3OH 8=$NaHSO_4$ 9=_____ 10=_____

DW=Drinking Water GW=Groundwater WW=Wastewater
O=Oil SW=Surface Water SO=Soil SL=Sludge A=Air
X1=_____ X2=_____ X3=_____

G=Grab C=Composite

Lab Id:	Sample Id:	Date:	Time:	Type	Matrix	Preservative	# of VOA Vials	# of Amber Glass	# of Clear Glass	~~# of Plastic~~ Filter	Summa Canister	TO-14 CVOCs only							
16775-01	SUE-1	8/18/04	0957	G	A	—				1	1	X							
-02	SUE-2		1030							1	1	X							
-03	SVMP-1	SVMP	0940							1	1	X							
-04	SVMP-2	Vas in	0906							1	1	X							
-05	SVMP-3	Victor	1120							1	1	X							
-06	SVMP-4	9/23/04 J.F	1102							1	1	X							
-07	SVMP-5		1046							1	1	X							
-08	SVMP-6		1013							1	1	X							
-09	ASMP-2		0923							1	1	X							
-10	ERM-13		0850							1	1	X							

QA Reporting Notes: (check if needed)
State specific reporting standards
If applicable, please list below.
☐ Provide MCP CAM Report
Were all field QC requirements met as per MADEP CAM Section 2.0?
☐ Yes ☐ No
(Response required for CAM report)

☒ Fax results when available to (860) 524-5680
☐ E-mail to _____
EDD Format _____

Condition upon receipt: ☐ Iced ☒ Ambient ☐ °C 23

Relinquished by:	Received by:	Date:	Time:
[signature]	[signature]	8/18/04	1130
[signature]	[signature]	8/19/04	1300

16775

SPECTRUM ANALYTICAL, INC.
Featuring
HANIBAL TECHNOLOGY

CHAIN OF CUSTODY RECORD

Page 2 of 2

Special Handling:
- ☐ Standard TAT - 7 to 10 business days
- ☒ Rush TAT - Date Needed: 8/25/04
- All TATs subject to laboratory approval. Min. 24-hour notification needed for rushes.
- Samples disposed of after 60 days unless otherwise instructed.

Report To: See Page 1

Project Mgr.:

Invoice To: Same

P.O. No.: RQN:

Project No.: 0016718
Site Name: Intel data
Location: New Milford State: CT
Sampler(s): J. Ferrick

1=$Na_2S_2O_3$ 2=HCl 3=H_2SO_4 4=HNO_3 5=NaOH 6=Ascorbic Acid
7=CH_3OH 8= $NaHSO_4$ 9= 10=

DW=Drinking Water GW=Groundwater WW=Wastewater
O=Oil SW= Surface Water SO=Soil SL=Sludge A=Air
X1= X2= X3=

G=Grab C=Composite

Lab Id:	Sample Id:	Date:	Time:	Type	Matrix	Preservative	# of VOA Vials	# of Amber Glass	# of Clear Glass	~~# of Plastic~~ 24 hour volatile	Summa	TO-14 Full List							QA Reporting Notes: (check if needed)
16775-11	IND-1	8/17/04	0808	G	A	–				1	1	X							
-12	IND-2	8/17/04	0812	G	A	–				1	1	X							

State specific reporting standards
If applicable, please list below.

☐ Provide MCP CAM Report
Were all field QC requirements met as per MADEP CAM Section 2.0?
☐ Yes ☐ No
(Response required for CAM report)

☒ Fax results when available to (860) 524-5686
☐ E-mail to
EDD Format

Condition upon receipt: ☐ Iced ☒ Ambient ☐ °C 23

Relinquished by:	Received by:	Date:	Time:
[illegible]	[illegible]	8/18/04	1130
[illegible]	[illegible]	8/19/04	1200

8A16775

SPECTRUM ANALYTICAL, INC.
Featuring
HANIBAL TECHNOLOGY

CHAIN OF CUSTODY RECORD

Page 1 of 2

Special Handling:
- ☐ Standard TAT - 7 to 10 business days
- ☒ Rush TAT - Date Needed: 8/25/04
- All TATs subject to laboratory approval. Min. 24-hour notification needed for rushes.
- Samples disposed of after 60 days unless otherwise instructed.

Report To: ERM-New England, Inc
Two Hartford Square West, Suite 300
146 Wyllys ST
Hartford, CT 06106
Project Mgr.: Bob Drake

Invoice To: IWH4004013 (JH)
Same
P.O. No.: _____ RQN: _____

Project No.: 0016718
Site Name: Intelidata
Location: New Milford State: CT
Sampler(s): J. Fernt

1=Na_2S2O_3 2=HCl 3=H_2SO_4 4=HNO_3 5=NaOH 6=Ascorbic Acid
7=CH_3OH 8= $NaHSO_4$ 9=_____ 10=_____

DW=Drinking Water GW=Groundwater WW=Wastewater
O=Oil SW= Surface Water SO=Soil SL=Sludge A=Air
X1=_____ X2=_____ X3=_____

G=Grab C=Composite

Containers: Analyses:

Lab Id:	Sample Id:	Date:	Time:	Type	Matrix	Preservative	# of VOA Vials	# of Amber Glass	# of Clear Glass	~~# of Plastic~~ Filter	Summa Canister	TO-14 CVOCs only							
16775-01	SUE-1	8/18/04	0957	G	A	—				1	1	X							
-02	SUE-2		1030							1	1	X							
-03	SVMP-1		0940							1	1	X							
-04	SUMP-2		0906							1	1	X							
-05	SUMP-3		1120							1	1	X							
-06	SUMP-4		1102							1	1	X							
-07	SUMP-5		1046							1	1	X							
-08	SUMP-6		1013							1	1	X							
-09	ASMP-2		0923							1	1	X							
-10	ERM-13		0850							1	1	X							

QA Reporting Notes: (check if needed)

State specific reporting standards *If applicable, please list below.*

☐ Provide MCP CAM Report
Were all field QC requirements met as per MADEP CAM Section 2.0?
☐ Yes ☐ No
(Response required for CAM report)

☒ Fax results when available to (860) 524-5680
☐ E-mail to _____
EDD Format _____

Condition upon receipt: ☐ Iced ☒ Ambient ☐ °C 23

Relinquished by:	Received by:	Date:	Time:
[signature]	[signature]	8/19/04	1130
[signature]	[signature]	8/19/04	1300

16775

SPECTRUM ANALYTICAL, INC.
Featuring
HANIBAL TECHNOLOGY

CHAIN OF CUSTODY RECORD

Page 2 of 3

Special Handling:
- ☐ Standard TAT - 7 to 10 business days
- ☒ Rush TAT - Date Needed: 8/25/04
- All TATs subject to laboratory approval. Min. 24-hour notification needed for rushes.
- Samples disposed of after 60 days unless otherwise instructed.

Report To: See Page 1

Project Mgr.:

Invoice To: Same

P.O. No.: RQN:

Project No.: 0016718
Site Name: Intel. data
Location: New Milford State: CT
Sampler(s): J. Ferrat

1=Na_2S2O_3 2=HCl 3=H_2SO_4 4=HNO_3 5=NaOH 6=Ascorbic Acid
7=CH_3OH 8= $NaHSO_4$ 9= 10=

DW=Drinking Water GW=Groundwater WW=Wastewater
O=Oil SW= Surface Water SO=Soil SL=Sludge A=Air
X1= X2= X3=

G=Grab C=Composite

Lab Id:	Sample Id:	Date:	Time:	Type	Matrix	Preservative	# of VOA Vials	# of Amber Glass	# of Clear Glass	~~# of Plastic~~ 24 hour valve	Summa	TO-14 Full List							QA Reporting Notes: (check if needed)
16775-11	IND-1	8/17/04	0808	G	A	–				1	1	X							
↓ -12	IND-2	8/17/04	0812	G	A	–				1	1	X							

State specific reporting standards
If applicable, please list below.

☐ Provide MCP CAM Report
Were all field QC requirements met as per MADEP CAM Section 2.0?
☐ Yes ☐ No
(Response required for CAM report)

☒ Fax results when available to (860 524-5686
☐ E-mail to
EDD Format

Condition upon receipt: ☐ Iced ☒ Ambient ☐ °C 23

Relinquished by:	Received by:	Date:	Time:
[signature]	[signature]	8/18/04	1130
[signature]	[signature]	8/19/04	1200

11 Almgren Drive • Agawam, Massachusetts 01001 • 413-789-9018 • Fax 413-789-4076 • www.spectrum-analytical.com

SPECTRUM ANALYTICAL, INC.
Featuring
HANIBAL TECHNOLOGY

CHAIN OF CUSTODY RECORD

Page 1 of 2

Special Handling:
- ☐ Standard TAT - 7 to 10 business days
- ☒ Rush TAT - Date Needed: 8/25/04
- All TATs subject to laboratory approval. Min. 24-hour notification needed for rushes.
- Samples disposed of after 60 days unless otherwise instructed.

Report To: ERM-New England, Inc.
Two Hartford Square West, Suite 300
Milk Wallis St
Hartford CT 06106
Project Mgr.: Bob Drake

Invoice To: Same
P.O. No.: RQN:

Project No.: 0016718
Site Name: Intelidata
Location: New Milford State: CT
Sampler(s): J. Ferrant

1=$Na_2S_2O_3$ 2=HCl 3=H_2SO_4 4=HNO_3 5=NaOH 6=Ascorbic Acid
7=CH_3OH 8= $NaHSO_4$ 9=____ 10=____

DW=Drinking Water GW=Groundwater WW=Wastewater
O=Oil SW= Surface Water SO=Soil SL=Sludge A=Air
X1=____ X2=____ X3=____

G=Grab C=Composite

Lab Id:	Sample Id:	Date:	Time:	Type	Matrix	Preservative	# of VOA Vials	# of Amber Glass	# of Clear Glass	~~# of Plastic~~ Filter	Summa Canister	TO-14 CVOCs only							
	SUE-1	8/18/04	0957	G	A	—				1	1	X							
	SUE-2		1030							1	1	X							
	SUMP-1		0940							1	1	X							
	SUMP-2		0906							1	1	X							
	SUMP-3		1120							1	1	X							
	SUMP-4		1102							1	1	X							
	SUMP-5		1046							1	1	X							
	SUMP-6		1013							1	1	X							
	ASMP-2		0923							1	1	X							
	ERM-13		0850							1	1	X							

QA Reporting Notes: (check if needed)

State specific reporting standards
If applicable, please list below.

☐ Provide MCP CAM Report
Were all field QC requirements met as per MADEP CAM Section 2.0?
☐ Yes ☐ No
(Response required for CAM report)

☒ Fax results when available to (860) 524-5680
☐ E-mail to ____
EDD Format ____

Condition upon receipt: ☐ Iced ☒ Ambient ☐ °C 23

Relinquished by:	Received by:	Date:	Time:
[signature]	[signature]	8/18/04	1130

11 Almgren Drive • Agawam, Massachusetts 01001 • 413-789-9018 • Fax 413-789-4076 • www.spectrum-analytical.com

SPECTRUM ANALYTICAL, INC.
Featuring
HANIBAL TECHNOLOGY

CHAIN OF CUSTODY RECORD

Page 2 of 2

Special Handling:
- ☐ Standard TAT - 7 to 10 business days
- ☒ Rush TAT - Date Needed: 8/25/04
- All TATs subject to laboratory approval. Min. 24-hour notification needed for rushes.
- Samples disposed of after 60 days unless otherwise instructed.

Report To: See Page 1

Project Mgr.:

Invoice To: Same

P.O. No.: RQN:

Project No.: 0016718
Site Name: Intel data
Location: New Milford State: SC
Sampler(s): J Ferrick

1=Na_2S2O_3 2=HCl 3=H_2SO_4 4=HNO_3 5=NaOH 6=Ascorbic Acid
7=CH_3OH 8= $NaHSO_4$ 9=____ 10=____

DW=Drinking Water GW=Groundwater WW=Wastewater
O=Oil SW= Surface Water SO=Soil SL=Sludge A=Air
X1=____ X2=____ X3=____

G=Grab C=Composite

Lab Id:	Sample Id:	Date:	Time:	Type	Matrix	Preservative	Containers: # of VOA Vials	# of Amber Glass	# of Clear Glass	~~# of Plastic~~ 24 hour vials	Summa	Analyses: TO-14 Full								QA Reporting Notes: (check if needed)
	IND-1	8/17/04	0808	G	A	–				1	1	X								State specific reporting standards *If applicable, please list below.*
	IND-2	8/17/04	0812	G	A	–				1	1	X								☐ Provide MCP CAM Report Were all field QC requirements met as per MADEP CAM Section 2.0? ☐ Yes ☐ No *(Response required for CAM report)*

☒ Fax results when available to (860) 524 5686
☐ E-mail to
EDD Format

Condition upon receipt: ☐ Iced ☒ Ambient ☐ °C 23

Relinquished by:	Received by:	Date:	Time:
[signature]	[signature]	8/18/04	430

Report Date:
18-Jun-04 16:59

SPECTRUM ANALYTICAL, INC.
Featuring
HANIBAL TECHNOLOGY

☑ Final Report
☐ Re-Issued Report
☐ Revised Report

Laboratory Report

Environmental Resources Management
146 Wyllys Street, Suite 300
Hartford, CT 06106
Attn: Robert Drake

Project:Intelidata - New Milford, CT
Project #:0016718

Laboratory ID	Client Sample ID	Matrix	Date Sampled	Date Received
SA13918-01	ASW-1	Ground Water	15-Jun-04 09:30	15-Jun-04 14:38
SA13918-02	ASW-2	Ground Water	15-Jun-04 10:35	15-Jun-04 14:38
SA13918-03	TRIP BLANK	Aqueous	15-Jun-04 00:00	15-Jun-04 14:38

I attest that the information contained within the report has been reviewed for accuracy and checked against the quality control requirements for each method. All applicable NELAC requirements have been met.
Please note that this report contains 15 pages of analytical data plus Chain of Custody document(s).
This report may not be reproduced, except in full, without written approval from Spectrum Analytical, Inc.

Massachusetts Certification # M-MA138/MA1110
Connecticut # PH-0777
Florida # E87600
Maine # MA138
New Hampshire # 2538
New York # 11393
Rhode Island # 98
USDA # S-51435

ACCREDITED IN ACCORDANCE WITH nelac

Authorized by:

Hanibal C. Tayeh, Ph.D.
President/Laboratory Director

Please refer to our "Quality" webpage at www.spectrum-analytical.com for a full listing of our current certifications.

Sample Identification	Client Project #	Matrix	Collection Date/Time	Received
ASW-1 SA13918-01	0016718	Ground Water	15-Jun-04 09:30	15-Jun-04

Analyte(s)	*Result*	**RDL/Units*	*Dilution*	*Method Ref.*	*Prepared*	*Analyzed*	*Batch*	*Analyst*	*Flag*
Volatile Organic Compounds									
Volatile Organic Compounds by SW846 8260B		Prepared by method		Volatiles					
Acetone	BRL	100 ug/l	5	SW846 8260B	17-Jun-04	17-Jun-04	4061079	RLJ	
Acrylonitrile	BRL	5.0 ug/l	5	"	"	"	"	"	
Benzene	BRL	5.0 ug/l	5	"	"	"	"	"	
Bromobenzene	BRL	5.0 ug/l	5	"	"	"	"	"	
Bromochloromethane	BRL	5.0 ug/l	5	"	"	"	"	"	
Bromodichloromethane	BRL	5.0 ug/l	5	"	"	"	"	"	
Bromoform	BRL	5.0 ug/l	5	"	"	"	"	"	
Bromomethane	BRL	10.0 ug/l	5	"	"	"	"	"	
2-Butanone (MEK)	1,040	50.0 ug/l	5	"	"	"	"	"	
n-Butylbenzene	BRL	5.0 ug/l	5	"	"	"	"	"	
sec-Butylbenzene	BRL	5.0 ug/l	5	"	"	"	"	"	
tert-Butylbenzene	BRL	5.0 ug/l	5	"	"	"	"	"	
Carbon disulfide	BRL	25.0 ug/l	5	"	"	"	"	"	
Carbon tetrachloride	BRL	5.0 ug/l	5	"	"	"	"	"	
Chlorobenzene	BRL	5.0 ug/l	5	"	"	"	"	"	
Chloroethane	BRL	10.0 ug/l	5	"	"	"	"	"	
Chloroform	BRL	5.0 ug/l	5	"	"	"	"	"	
Chloromethane	BRL	10.0 ug/l	5	"	"	"	"	"	
2-Chlorotoluene	BRL	5.0 ug/l	5	"	"	"	"	"	
4-Chlorotoluene	BRL	5.0 ug/l	5	"	"	"	"	"	
1,2-Dibromo-3-chloropropane	BRL	10.0 ug/l	5	"	"	"	"	"	
Dibromochloromethane	BRL	5.0 ug/l	5	"	"	"	"	"	
1,2-Dibromoethane (EDB)	BRL	5.0 ug/l	5	"	"	"	"	"	
Dibromomethane	BRL	5.0 ug/l	5	"	"	"	"	"	
1,2-Dichlorobenzene	BRL	5.0 ug/l	5	"	"	"	"	"	
1,3-Dichlorobenzene	BRL	5.0 ug/l	5	"	"	"	"	"	
1,4-Dichlorobenzene	BRL	5.0 ug/l	5	"	"	"	"	"	
Dichlorodifluoromethane (Freon12)	BRL	10.0 ug/l	5	"	"	"	"	"	
1,1-Dichloroethane	1,200	5.0 ug/l	5	"	"	"	"	"	
1,2-Dichloroethane	BRL	5.0 ug/l	5	"	"	"	"	"	
1,1-Dichloroethene	377	5.0 ug/l	5	"	"	"	"	"	
cis-1,2-Dichloroethene	184	5.0 ug/l	5	"	"	"	"	"	
trans-1,2-Dichloroethene	BRL	5.0 ug/l	5	"	"	"	"	"	
1,2-Dichloropropane	BRL	5.0 ug/l	5	"	"	"	"	"	
1,3-Dichloropropane	BRL	5.0 ug/l	5	"	"	"	"	"	
2,2-Dichloropropane	BRL	5.0 ug/l	5	"	"	"	"	"	
1,1-Dichloropropene	BRL	5.0 ug/l	5	"	"	"	"	"	
cis-1,3-Dichloropropene	BRL	5.0 ug/l	5	"	"	"	"	"	
trans-1,3-Dichloropropene	BRL	5.0 ug/l	5	"	"	"	"	"	
Ethylbenzene	BRL	5.0 ug/l	5	"	"	"	"	"	
Hexachlorobutadiene	BRL	5.0 ug/l	5	"	"	"	"	"	
2-Hexanone (MBK)	BRL	50.0 ug/l	5	"	"	"	"	"	
Isopropylbenzene	BRL	5.0 ug/l	5	"	"	"	"	"	
4-Isopropyltoluene	BRL	5.0 ug/l	5	"	"	"	"	"	
Methyl tert-butyl ether	BRL	5.0 ug/l	5	"	"	"	"	"	
4-Methyl-2-pentanone (MIBK)	BRL	50.0 ug/l	5	"	"	"	"	"	

Sample Identification	Client Project #	Matrix	Collection Date/Time	Received
ASW-1 SA13918-01	0016718	Ground Water	15-Jun-04 09:30	15-Jun-04

Analyte(s)	*Result*	**RDL/Units*	*Dilution*	*Method Ref.*	*Prepared*	*Analyzed*	*Batch*	*Analyst*	*Flag*
Volatile Organic Compounds									
Volatile Organic Compounds by SW846 8260B		Prepared by method		Volatiles					
Methylene chloride	BRL	50.0 ug/l	5	SW846 8260B	17-Jun-04	17-Jun-04	4061079	RLJ	
Naphthalene	BRL	5.0 ug/l	5	"	"	"	"	"	
n-Propylbenzene	BRL	5.0 ug/l	5	"	"	"	"	"	
Styrene	BRL	5.0 ug/l	5	"	"	"	"	"	
1,1,1,2-Tetrachloroethane	BRL	5.0 ug/l	5	"	"	"	"	"	
1,1,2,2-Tetrachloroethane	BRL	5.0 ug/l	5	"	"	"	"	"	
Tetrachloroethene	42.7	5.0 ug/l	5	"	"	"	"	"	
Toluene	BRL	5.0 ug/l	5	"	"	"	"	"	
1,2,3-Trichlorobenzene	BRL	5.0 ug/l	5	"	"	"	"	"	
1,2,4-Trichlorobenzene	BRL	5.0 ug/l	5	"	"	"	"	"	
1,1,1-Trichloroethane	12,900	5.0 ug/l	5	"	"	"	"	"	E
1,1,2-Trichloroethane	6.6	5.0 ug/l	5	"	"	"	"	"	
Trichloroethene	374	5.0 ug/l	5	"	"	"	"	"	
Trichlorofluoromethane (Freon 11)	BRL	5.0 ug/l	5	"	"	"	"	"	
1,2,3-Trichloropropane	BRL	5.0 ug/l	5	"	"	"	"	"	
1,2,4-Trimethylbenzene	BRL	5.0 ug/l	5	"	"	"	"	"	
1,3,5-Trimethylbenzene	BRL	5.0 ug/l	5	"	"	"	"	"	
Vinyl chloride	BRL	5.0 ug/l	5	"	"	"	"	"	
m,p-Xylene	BRL	10.0 ug/l	5	"	"	"	"	"	
o-Xylene	BRL	5.0 ug/l	5	"	"	"	"	"	
Surrogate: 4-Bromofluorobenzene	*96.6*	*70-130 %*		"	"	"	"	"	
Surrogate: Toluene-d8	*95.6*	*70-130 %*		"	"	"	"	"	
Surrogate: 1,2-Dichloroethane-d4	*111*	*70-130 %*		"	"	"	"	"	
Surrogate: Dibromofluoromethane	*109*	*70-130 %*		"	"	"	"	"	

Sample Identification	Client Project #	Matrix	Collection Date/Time	Received
ASW-1 SA13918-01RE1	0016718	Ground Water	15-Jun-04 09:30	15-Jun-04

Analyte(s)	*Result*	**RDL/Units*	*Dilution*	*Method Ref.*	*Prepared*	*Analyzed*	*Batch*	*Analyst*	*Flag*
Volatile Organic Compounds									
Volatile Organic Compounds by SW846 8260B		Prepared by method		Volatiles					
1,1,1-Trichloroethane	15,700	200 ug/l	200	SW846 8260B	18-Jun-04	18-Jun-04	4061136	RLJ	
Surrogate: 4-Bromofluorobenzene	*97.0*	*70-130 %*		"	"	"	"	"	
Surrogate: Toluene-d8	*94.4*	*70-130 %*		"	"	"	"	"	
Surrogate: 1,2-Dichloroethane-d4	*113*	*70-130 %*		"	"	"	"	"	
Surrogate: Dibromofluoromethane	*110*	*70-130 %*		"	"	"	"	"	

Sample Identification	Client Project #	Matrix	Collection Date/Time	Received
ASW-2 SA13918-02	0016718	Ground Water	15-Jun-04 10:35	15-Jun-04

Analyte(s)	*Result*	**RDL/Units*	*Dilution*	*Method Ref.*	*Prepared*	*Analyzed*	*Batch*	*Analyst*	*Flag*
Volatile Organic Compounds									
Volatile Organic Compounds by SW846 8260B		Prepared by method		Volatiles					
Acetone	BRL	100 ug/l	5	SW846 8260B	17-Jun-04	17-Jun-04	4061079	RLJ	
Acrylonitrile	BRL	5.0 ug/l	5	"	"	"	"	"	
Benzene	BRL	5.0 ug/l	5	"	"	"	"	"	
Bromobenzene	BRL	5.0 ug/l	5	"	"	"	"	"	
Bromochloromethane	BRL	5.0 ug/l	5	"	"	"	"	"	
Bromodichloromethane	BRL	5.0 ug/l	5	"	"	"	"	"	
Bromoform	BRL	5.0 ug/l	5	"	"	"	"	"	
Bromomethane	BRL	10.0 ug/l	5	"	"	"	"	"	
2-Butanone (MEK)	BRL	50.0 ug/l	5	"	"	"	"	"	
n-Butylbenzene	BRL	5.0 ug/l	5	"	"	"	"	"	
sec-Butylbenzene	BRL	5.0 ug/l	5	"	"	"	"	"	
tert-Butylbenzene	BRL	5.0 ug/l	5	"	"	"	"	"	
Carbon disulfide	BRL	25.0 ug/l	5	"	"	"	"	"	
Carbon tetrachloride	BRL	5.0 ug/l	5	"	"	"	"	"	
Chlorobenzene	BRL	5.0 ug/l	5	"	"	"	"	"	
Chloroethane	BRL	10.0 ug/l	5	"	"	"	"	"	
Chloroform	BRL	5.0 ug/l	5	"	"	"	"	"	
Chloromethane	BRL	10.0 ug/l	5	"	"	"	"	"	
2-Chlorotoluene	BRL	5.0 ug/l	5	"	"	"	"	"	
4-Chlorotoluene	BRL	5.0 ug/l	5	"	"	"	"	"	
1,2-Dibromo-3-chloropropane	BRL	10.0 ug/l	5	"	"	"	"	"	
Dibromochloromethane	BRL	5.0 ug/l	5	"	"	"	"	"	
1,2-Dibromoethane (EDB)	BRL	5.0 ug/l	5	"	"	"	"	"	
Dibromomethane	BRL	5.0 ug/l	5	"	"	"	"	"	
1,2-Dichlorobenzene	BRL	5.0 ug/l	5	"	"	"	"	"	
1,3-Dichlorobenzene	BRL	5.0 ug/l	5	"	"	"	"	"	
1,4-Dichlorobenzene	BRL	5.0 ug/l	5	"	"	"	"	"	
Dichlorodifluoromethane (Freon12)	BRL	10.0 ug/l	5	"	"	"	"	"	
1,1-Dichloroethane	256	5.0 ug/l	5	"	"	"	"	"	
1,2-Dichloroethane	5.8	5.0 ug/l	5	"	"	"	"	"	
1,1-Dichloroethene	992	5.0 ug/l	5	"	"	"	"	"	
cis-1,2-Dichloroethene	61.0	5.0 ug/l	5	"	"	"	"	"	
trans-1,2-Dichloroethene	BRL	5.0 ug/l	5	"	"	"	"	"	
1,2-Dichloropropane	BRL	5.0 ug/l	5	"	"	"	"	"	
1,3-Dichloropropane	BRL	5.0 ug/l	5	"	"	"	"	"	
2,2-Dichloropropane	BRL	5.0 ug/l	5	"	"	"	"	"	
1,1-Dichloropropene	BRL	5.0 ug/l	5	"	"	"	"	"	
cis-1,3-Dichloropropene	BRL	5.0 ug/l	5	"	"	"	"	"	
trans-1,3-Dichloropropene	BRL	5.0 ug/l	5	"	"	"	"	"	
Ethylbenzene	BRL	5.0 ug/l	5	"	"	"	"	"	
Hexachlorobutadiene	BRL	5.0 ug/l	5	"	"	"	"	"	
2-Hexanone (MBK)	BRL	50.0 ug/l	5	"	"	"	"	"	
Isopropylbenzene	BRL	5.0 ug/l	5	"	"	"	"	"	
4-Isopropyltoluene	BRL	5.0 ug/l	5	"	"	"	"	"	
Methyl tert-butyl ether	8.0	5.0 ug/l	5	"	"	"	"	"	
4-Methyl-2-pentanone (MIBK)	BRL	50.0 ug/l	5	"	"	"	"	"	

This laboratory report is not valid without an authorized signature on the cover page.

*Reportable Detection Limit BRL = Below Reporting Limit

Sample Identification	Client Project #	Matrix	Collection Date/Time	Received
ASW-2 SA13918-02	0016718	Ground Water	15-Jun-04 10:35	15-Jun-04

Analyte(s)	*Result*	**RDL/Units*	*Dilution*	*Method Ref.*	*Prepared*	*Analyzed*	*Batch*	*Analyst*	*Flag*
Volatile Organic Compounds									
Volatile Organic Compounds by SW846 8260B		Prepared by method		Volatiles					
Methylene chloride	BRL	50.0 ug/l	5	SW846 8260B	17-Jun-04	17-Jun-04	4061079	RLJ	
Naphthalene	BRL	5.0 ug/l	5	"	"	"	"	"	
n-Propylbenzene	BRL	5.0 ug/l	5	"	"	"	"	"	
Styrene	BRL	5.0 ug/l	5	"	"	"	"	"	
1,1,1,2-Tetrachloroethane	BRL	5.0 ug/l	5	"	"	"	"	"	
1,1,2,2-Tetrachloroethane	BRL	5.0 ug/l	5	"	"	"	"	"	
Tetrachloroethene	27.9	5.0 ug/l	5	"	"	"	"	"	
Toluene	BRL	5.0 ug/l	5	"	"	"	"	"	
1,2,3-Trichlorobenzene	BRL	5.0 ug/l	5	"	"	"	"	"	
1,2,4-Trichlorobenzene	BRL	5.0 ug/l	5	"	"	"	"	"	
1,1,1-Trichloroethane	10,300	5.0 ug/l	5	"	"	"	"	"	E
1,1,2-Trichloroethane	9.3	5.0 ug/l	5	"	"	"	"	"	
Trichloroethene	1,150	5.0 ug/l	5	"	"	"	"	"	
Trichlorofluoromethane (Freon 11)	BRL	5.0 ug/l	5	"	"	"	"	"	
1,2,3-Trichloropropane	BRL	5.0 ug/l	5	"	"	"	"	"	
1,2,4-Trimethylbenzene	BRL	5.0 ug/l	5	"	"	"	"	"	
1,3,5-Trimethylbenzene	BRL	5.0 ug/l	5	"	"	"	"	"	
Vinyl chloride	BRL	5.0 ug/l	5	"	"	"	"	"	
m,p-Xylene	BRL	10.0 ug/l	5	"	"	"	"	"	
o-Xylene	BRL	5.0 ug/l	5	"	"	"	"	"	
Surrogate: 4-Bromofluorobenzene	*93.2*	*70-130 %*		"	"	"	"	"	
Surrogate: Toluene-d8	*99.6*	*70-130 %*		"	"	"	"	"	
Surrogate: 1,2-Dichloroethane-d4	*116*	*70-130 %*		"	"	"	"	"	
Surrogate: Dibromofluoromethane	*115*	*70-130 %*		"	"	"	"	"	

Sample Identification	Client Project #	Matrix	Collection Date/Time	Received
ASW-2 SA13918-02RE1	0016718	Ground Water	15-Jun-04 10:35	15-Jun-04

Analyte(s)	*Result*	**RDL/Units*	*Dilution*	*Method Ref.*	*Prepared*	*Analyzed*	*Batch*	*Analyst*	*Flag*
Volatile Organic Compounds									
Volatile Organic Compounds by SW846 8260B		Prepared by method		Volatiles					
1,1,1-Trichloroethane	11,900	200 ug/l	200	SW846 8260B	18-Jun-04	18-Jun-04	4061136	RLJ	
Surrogate: 4-Bromofluorobenzene	*94.4*	*70-130 %*		"	"	"	"	"	
Surrogate: Toluene-d8	*102*	*70-130 %*		"	"	"	"	"	
Surrogate: 1,2-Dichloroethane-d4	*113*	*70-130 %*		"	"	"	"	"	
Surrogate: Dibromofluoromethane	*113*	*70-130 %*		"	"	"	"	"	

Sample Identification	Client Project #	Matrix	Collection Date/Time	Received
TRIP BLANK SA13918-03	0016718	Aqueous	15-Jun-04 00:00	15-Jun-04

Analyte(s)	*Result*	**RDL/Units*	*Dilution*	*Method Ref.*	*Prepared*	*Analyzed*	*Batch*	*Analyst*	*Flag*
Volatile Organic Compounds									
Volatile Organic Compounds by SW846 8260B		Prepared by method		Volatiles					
Acetone	BRL	20.0 ug/l	1	SW846 8260B	17-Jun-04	17-Jun-04	4061079	RLJ	
Acrylonitrile	BRL	1.0 ug/l	1	"	"	"	"	"	
Benzene	BRL	1.0 ug/l	1	"	"	"	"	"	
Bromobenzene	BRL	1.0 ug/l	1	"	"	"	"	"	
Bromochloromethane	BRL	1.0 ug/l	1	"	"	"	"	"	
Bromodichloromethane	BRL	1.0 ug/l	1	"	"	"	"	"	
Bromoform	BRL	1.0 ug/l	1	"	"	"	"	"	
Bromomethane	BRL	2.0 ug/l	1	"	"	"	"	"	
2-Butanone (MEK)	BRL	10.0 ug/l	1	"	"	"	"	"	
n-Butylbenzene	BRL	1.0 ug/l	1	"	"	"	"	"	
sec-Butylbenzene	BRL	1.0 ug/l	1	"	"	"	"	"	
tert-Butylbenzene	BRL	1.0 ug/l	1	"	"	"	"	"	
Carbon disulfide	BRL	5.0 ug/l	1	"	"	"	"	"	
Carbon tetrachloride	BRL	1.0 ug/l	1	"	"	"	"	"	
Chlorobenzene	BRL	1.0 ug/l	1	"	"	"	"	"	
Chloroethane	BRL	2.0 ug/l	1	"	"	"	"	"	
Chloroform	BRL	1.0 ug/l	1	"	"	"	"	"	
Chloromethane	BRL	2.0 ug/l	1	"	"	"	"	"	
2-Chlorotoluene	BRL	1.0 ug/l	1	"	"	"	"	"	
4-Chlorotoluene	BRL	1.0 ug/l	1	"	"	"	"	"	
1,2-Dibromo-3-chloropropane	BRL	2.0 ug/l	1	"	"	"	"	"	
Dibromochloromethane	BRL	1.0 ug/l	1	"	"	"	"	"	
1,2-Dibromoethane (EDB)	BRL	1.0 ug/l	1	"	"	"	"	"	
Dibromomethane	BRL	1.0 ug/l	1	"	"	"	"	"	
1,2-Dichlorobenzene	BRL	1.0 ug/l	1	"	"	"	"	"	
1,3-Dichlorobenzene	BRL	1.0 ug/l	1	"	"	"	"	"	
1,4-Dichlorobenzene	BRL	1.0 ug/l	1	"	"	"	"	"	
Dichlorodifluoromethane (Freon12)	BRL	2.0 ug/l	1	"	"	"	"	"	
1,1-Dichloroethane	BRL	1.0 ug/l	1	"	"	"	"	"	
1,2-Dichloroethane	BRL	1.0 ug/l	1	"	"	"	"	"	
1,1-Dichloroethene	BRL	1.0 ug/l	1	"	"	"	"	"	
cis-1,2-Dichloroethene	BRL	1.0 ug/l	1	"	"	"	"	"	
trans-1,2-Dichloroethene	BRL	1.0 ug/l	1	"	"	"	"	"	
1,2-Dichloropropane	BRL	1.0 ug/l	1	"	"	"	"	"	
1,3-Dichloropropane	BRL	1.0 ug/l	1	"	"	"	"	"	
2,2-Dichloropropane	BRL	1.0 ug/l	1	"	"	"	"	"	
1,1-Dichloropropene	BRL	1.0 ug/l	1	"	"	"	"	"	
cis-1,3-Dichloropropene	BRL	1.0 ug/l	1	"	"	"	"	"	
trans-1,3-Dichloropropene	BRL	1.0 ug/l	1	"	"	"	"	"	
Ethylbenzene	BRL	1.0 ug/l	1	"	"	"	"	"	
Hexachlorobutadiene	BRL	1.0 ug/l	1	"	"	"	"	"	
2-Hexanone (MBK)	BRL	10.0 ug/l	1	"	"	"	"	"	
Isopropylbenzene	BRL	1.0 ug/l	1	"	"	"	"	"	
4-Isopropyltoluene	BRL	1.0 ug/l	1	"	"	"	"	"	
Methyl tert-butyl ether	BRL	1.0 ug/l	1	"	"	"	"	"	
4-Methyl-2-pentanone (MIBK)	BRL	10.0 ug/l	1	"	"	"	"	"	

Sample Identification	Client Project #	Matrix	Collection Date/Time	Received
TRIP BLANK SA13918-03	0016718	Aqueous	15-Jun-04 00:00	15-Jun-04

Analyte(s)	*Result*	**RDL/Units*	*Dilution*	*Method Ref.*	*Prepared*	*Analyzed*	*Batch*	*Analyst*	*Flag*
Volatile Organic Compounds									
Volatile Organic Compounds by SW846 8260B		Prepared by method		Volatiles					
Methylene chloride	BRL	10.0 ug/l	1	SW846 8260B	17-Jun-04	17-Jun-04	4061079	RLJ	
Naphthalene	BRL	1.0 ug/l	1	"	"	"	"	"	
n-Propylbenzene	BRL	1.0 ug/l	1	"	"	"	"	"	
Styrene	BRL	1.0 ug/l	1	"	"	"	"	"	
1,1,1,2-Tetrachloroethane	BRL	1.0 ug/l	1	"	"	"	"	"	
1,1,2,2-Tetrachloroethane	BRL	1.0 ug/l	1	"	"	"	"	"	
Tetrachloroethene	BRL	1.0 ug/l	1	"	"	"	"	"	
Toluene	BRL	1.0 ug/l	1	"	"	"	"	"	
1,2,3-Trichlorobenzene	BRL	1.0 ug/l	1	"	"	"	"	"	
1,2,4-Trichlorobenzene	BRL	1.0 ug/l	1	"	"	"	"	"	
1,1,1-Trichloroethane	BRL	1.0 ug/l	1	"	"	"	"	"	
1,1,2-Trichloroethane	BRL	1.0 ug/l	1	"	"	"	"	"	
Trichloroethene	BRL	1.0 ug/l	1	"	"	"	"	"	
Trichlorofluoromethane (Freon 11)	BRL	1.0 ug/l	1	"	"	"	"	"	
1,2,3-Trichloropropane	BRL	1.0 ug/l	1	"	"	"	"	"	
1,2,4-Trimethylbenzene	BRL	1.0 ug/l	1	"	"	"	"	"	
1,3,5-Trimethylbenzene	BRL	1.0 ug/l	1	"	"	"	"	"	
Vinyl chloride	BRL	1.0 ug/l	1	"	"	"	"	"	
m,p-Xylene	BRL	2.0 ug/l	1	"	"	"	"	"	
o-Xylene	BRL	1.0 ug/l	1	"	"	"	"	"	
Surrogate: 4-Bromofluorobenzene	*92.8*	*70-130 %*		"	"	"	"	"	
Surrogate: Toluene-d8	*100*	*70-130 %*		"	"	"	"	"	
Surrogate: 1,2-Dichloroethane-d4	*119*	*70-130 %*		"	"	"	"	"	
Surrogate: Dibromofluoromethane	*116*	*70-130 %*		"	"	"	"	"	

Volatile Organic Compounds - Quality Control

Analyte(s)	Result	*RDL	Units	Spike Level	Source Result	%REC	%REC Limits	RPD	RPD Limit	Flag
Batch 4061079 - Volatiles										
Blank (4061079-BLK1)				Prepared & Analyzed: 17-Jun-04						
Acetone	BRL	20.0	ug/l							
Acrylonitrile	BRL	1.0	ug/l							
Benzene	BRL	1.0	ug/l							
Bromobenzene	BRL	1.0	ug/l							
Bromochloromethane	BRL	1.0	ug/l							
Bromodichloromethane	BRL	1.0	ug/l							
Bromoform	BRL	1.0	ug/l							
Bromomethane	BRL	2.0	ug/l							
2-Butanone (MEK)	BRL	10.0	ug/l							
n-Butylbenzene	BRL	1.0	ug/l							
sec-Butylbenzene	BRL	1.0	ug/l							
tert-Butylbenzene	BRL	1.0	ug/l							
Carbon disulfide	BRL	5.0	ug/l							
Carbon tetrachloride	BRL	1.0	ug/l							
Chlorobenzene	BRL	1.0	ug/l							
Chloroethane	BRL	2.0	ug/l							
Chloroform	BRL	1.0	ug/l							
Chloromethane	BRL	2.0	ug/l							
2-Chlorotoluene	BRL	1.0	ug/l							
4-Chlorotoluene	BRL	1.0	ug/l							
1,2-Dibromo-3-chloropropane	BRL	2.0	ug/l							
Dibromochloromethane	BRL	1.0	ug/l							
1,2-Dibromoethane (EDB)	BRL	1.0	ug/l							
Dibromomethane	BRL	1.0	ug/l							
1,2-Dichlorobenzene	BRL	1.0	ug/l							
1,3-Dichlorobenzene	BRL	1.0	ug/l							
1,4-Dichlorobenzene	BRL	1.0	ug/l							
Dichlorodifluoromethane (Freon12)	BRL	2.0	ug/l							
1,1-Dichloroethane	BRL	1.0	ug/l							
1,2-Dichloroethane	BRL	1.0	ug/l							
1,1-Dichloroethene	BRL	1.0	ug/l							
cis-1,2-Dichloroethene	BRL	1.0	ug/l							
trans-1,2-Dichloroethene	BRL	1.0	ug/l							
1,2-Dichloropropane	BRL	1.0	ug/l							
1,3-Dichloropropane	BRL	1.0	ug/l							
2,2-Dichloropropane	BRL	1.0	ug/l							
1,1-Dichloropropene	BRL	1.0	ug/l							
cis-1,3-Dichloropropene	BRL	1.0	ug/l							
trans-1,3-Dichloropropene	BRL	1.0	ug/l							
Ethylbenzene	BRL	1.0	ug/l							
Hexachlorobutadiene	BRL	1.0	ug/l							
2-Hexanone (MBK)	BRL	10.0	ug/l							
Isopropylbenzene	BRL	1.0	ug/l							
4-Isopropyltoluene	BRL	1.0	ug/l							
Methyl tert-butyl ether	BRL	1.0	ug/l							
4-Methyl-2-pentanone (MIBK)	BRL	10.0	ug/l							
Methylene chloride	BRL	10.0	ug/l							
Naphthalene	BRL	1.0	ug/l							
n-Propylbenzene	BRL	1.0	ug/l							
Styrene	BRL	1.0	ug/l							
1,1,1,2-Tetrachloroethane	BRL	1.0	ug/l							
1,1,2,2-Tetrachloroethane	BRL	1.0	ug/l							
Tetrachloroethene	BRL	1.0	ug/l							
Toluene	BRL	1.0	ug/l							

Volatile Organic Compounds - Quality Control

Analyte(s)	Result	*RDL	Units	Spike Level	Source Result	%REC	%REC Limits	RPD	RPD Limit	Flag
Batch 4061079 - Volatiles										
Blank (4061079-BLK1)				Prepared & Analyzed: 17-Jun-04						
1,2,3-Trichlorobenzene	BRL	1.0	ug/l							
1,2,4-Trichlorobenzene	BRL	1.0	ug/l							
1,1,1-Trichloroethane	BRL	1.0	ug/l							
1,1,2-Trichloroethane	BRL	1.0	ug/l							
Trichloroethene	BRL	1.0	ug/l							
Trichlorofluoromethane (Freon 11)	BRL	1.0	ug/l							
1,2,3-Trichloropropane	BRL	1.0	ug/l							
1,2,4-Trimethylbenzene	BRL	1.0	ug/l							
1,3,5-Trimethylbenzene	BRL	1.0	ug/l							
Vinyl chloride	BRL	1.0	ug/l							
m,p-Xylene	BRL	2.0	ug/l							
o-Xylene	BRL	1.0	ug/l							
Surrogate: 4-Bromofluorobenzene	*46.0*		ug/l	*50.0*		*92.0*	*70-130*			
Surrogate: Toluene-d8	*48.8*		ug/l	*50.0*		*97.6*	*70-130*			
Surrogate: 1,2-Dichloroethane-d4	*57.0*		ug/l	*50.0*		*114*	*70-130*			
Surrogate: Dibromofluoromethane	*55.8*		ug/l	*50.0*		*112*	*70-130*			
Duplicate (4061079-DUP1)		Source: SA13872-04		Prepared & Analyzed: 17-Jun-04						
Acetone	BRL	20.0	ug/l		BRL				30	
Acrylonitrile	BRL	1.0	ug/l		BRL				30	
Benzene	BRL	1.0	ug/l		BRL				30	
Bromobenzene	BRL	1.0	ug/l		BRL				30	
Bromochloromethane	BRL	1.0	ug/l		BRL				30	
Bromodichloromethane	BRL	1.0	ug/l		BRL				30	
Bromoform	BRL	1.0	ug/l		BRL				30	
Bromomethane	BRL	2.0	ug/l		BRL				30	
2-Butanone (MEK)	BRL	10.0	ug/l		BRL				30	
n-Butylbenzene	BRL	1.0	ug/l		BRL				30	
sec-Butylbenzene	BRL	1.0	ug/l		BRL				30	
tert-Butylbenzene	BRL	1.0	ug/l		BRL				30	
Carbon disulfide	BRL	5.0	ug/l		BRL				30	
Carbon tetrachloride	BRL	1.0	ug/l		BRL				30	
Chlorobenzene	BRL	1.0	ug/l		BRL				30	
Chloroethane	BRL	2.0	ug/l		BRL				30	
Chloroform	BRL	1.0	ug/l		BRL				30	
Chloromethane	BRL	2.0	ug/l		BRL				30	
2-Chlorotoluene	BRL	1.0	ug/l		BRL				30	
4-Chlorotoluene	BRL	1.0	ug/l		BRL				30	
1,2-Dibromo-3-chloropropane	BRL	2.0	ug/l		BRL				30	
Dibromochloromethane	BRL	1.0	ug/l		BRL				30	
1,2-Dibromoethane (EDB)	BRL	1.0	ug/l		BRL				30	
Dibromomethane	BRL	1.0	ug/l		BRL				30	
1,2-Dichlorobenzene	BRL	1.0	ug/l		BRL				30	
1,3-Dichlorobenzene	BRL	1.0	ug/l		BRL				30	
1,4-Dichlorobenzene	BRL	1.0	ug/l		BRL				30	
Dichlorodifluoromethane (Freon12)	BRL	2.0	ug/l		BRL				30	
1,1-Dichloroethane	BRL	1.0	ug/l		BRL				30	
1,2-Dichloroethane	BRL	1.0	ug/l		BRL				30	
1,1-Dichloroethene	BRL	1.0	ug/l		BRL				30	
cis-1,2-Dichloroethene	BRL	1.0	ug/l		BRL				30	
trans-1,2-Dichloroethene	BRL	1.0	ug/l		BRL				30	
1,2-Dichloropropane	BRL	1.0	ug/l		BRL				30	
1,3-Dichloropropane	BRL	1.0	ug/l		BRL				30	
2,2-Dichloropropane	BRL	1.0	ug/l		BRL				30	
1,1-Dichloropropene	BRL	1.0	ug/l		BRL				30	

Volatile Organic Compounds - Quality Control

Analyte(s)	Result	*RDL	Units	Spike Level	Source Result	%REC	%REC Limits	RPD	RPD Limit	Flag
Batch 4061079 - Volatiles										
Duplicate (4061079-DUP1)		**Source: SA13872-04**		Prepared & Analyzed: 17-Jun-04						
cis-1,3-Dichloropropene	BRL	1.0	ug/l		BRL				30	
trans-1,3-Dichloropropene	BRL	1.0	ug/l		BRL				30	
Ethylbenzene	BRL	1.0	ug/l		BRL				30	
Hexachlorobutadiene	BRL	1.0	ug/l		BRL				30	
2-Hexanone (MBK)	BRL	10.0	ug/l		BRL				30	
Isopropylbenzene	BRL	1.0	ug/l		BRL				30	
4-Isopropyltoluene	BRL	1.0	ug/l		BRL				30	
Methyl tert-butyl ether	4.5	1.0	ug/l		4.5			0.00	30	
4-Methyl-2-pentanone (MIBK)	BRL	10.0	ug/l		BRL				30	
Methylene chloride	BRL	10.0	ug/l		BRL				30	
Naphthalene	BRL	1.0	ug/l		BRL				30	
n-Propylbenzene	BRL	1.0	ug/l		BRL				30	
Styrene	BRL	1.0	ug/l		BRL				30	
1,1,1,2-Tetrachloroethane	BRL	1.0	ug/l		BRL				30	
1,1,2,2-Tetrachloroethane	BRL	1.0	ug/l		BRL				30	
Tetrachloroethene	BRL	1.0	ug/l		BRL				30	
Toluene	BRL	1.0	ug/l		BRL				30	
1,2,3-Trichlorobenzene	BRL	1.0	ug/l		BRL				30	
1,2,4-Trichlorobenzene	BRL	1.0	ug/l		BRL				30	
1,1,1-Trichloroethane	BRL	1.0	ug/l		BRL				30	
1,1,2-Trichloroethane	BRL	1.0	ug/l		BRL				30	
Trichloroethene	BRL	1.0	ug/l		BRL				30	
Trichlorofluoromethane (Freon 11)	BRL	1.0	ug/l		BRL				30	
1,2,3-Trichloropropane	BRL	1.0	ug/l		BRL				30	
1,2,4-Trimethylbenzene	BRL	1.0	ug/l		BRL				30	
1,3,5-Trimethylbenzene	BRL	1.0	ug/l		BRL				30	
Vinyl chloride	BRL	1.0	ug/l		BRL				30	
m,p-Xylene	BRL	2.0	ug/l		BRL				30	
o-Xylene	BRL	1.0	ug/l		BRL				30	
Surrogate: 4-Bromofluorobenzene	*46.2*		ug/l	*50.0*		*92.4*	*70-130*			
Surrogate: Toluene-d8	*47.0*		ug/l	*50.0*		*94.0*	*70-130*			
Surrogate: 1,2-Dichloroethane-d4	*54.8*		ug/l	*50.0*		*110*	*70-130*			
Surrogate: Dibromofluoromethane	*54.4*		ug/l	*50.0*		*109*	*70-130*			
Matrix Spike (4061079-MS1)		**Source: SA13872-04**		Prepared & Analyzed: 17-Jun-04						
Benzene	17.2		ug/l	20.0	BRL	86.0	70-130			
Chlorobenzene	17.8		ug/l	20.0	BRL	89.0	70-130			
1,1-Dichloroethene	17.1		ug/l	20.0	BRL	85.5	70-130			
Toluene	18.0		ug/l	20.0	BRL	90.0	70-130			
Trichloroethene	17.7		ug/l	20.0	BRL	88.5	70-130			
Surrogate: 4-Bromofluorobenzene	*45.9*		ug/l	*50.0*		*91.8*	*70-130*			
Surrogate: Toluene-d8	*49.4*		ug/l	*50.0*		*98.8*	*70-130*			
Surrogate: 1,2-Dichloroethane-d4	*55.5*		ug/l	*50.0*		*111*	*70-130*			
Surrogate: Dibromofluoromethane	*55.5*		ug/l	*50.0*		*111*	*70-130*			
Matrix Spike Dup (4061079-MSD1)		**Source: SA13872-04**		Prepared & Analyzed: 17-Jun-04						
Benzene	17.3		ug/l	20.0	BRL	86.5	70-130	0.580	30	
Chlorobenzene	18.2		ug/l	20.0	BRL	91.0	70-130	2.22	30	
1,1-Dichloroethene	17.2		ug/l	20.0	BRL	86.0	70-130	0.583	30	
Toluene	18.4		ug/l	20.0	BRL	92.0	70-130	2.20	30	
Trichloroethene	18.0		ug/l	20.0	BRL	90.0	70-130	1.68	30	
Surrogate: 4-Bromofluorobenzene	*46.2*		ug/l	*50.0*		*92.4*	*70-130*			
Surrogate: Toluene-d8	*49.1*		ug/l	*50.0*		*98.2*	*70-130*			
Surrogate: 1,2-Dichloroethane-d4	*55.2*		ug/l	*50.0*		*110*	*70-130*			
Surrogate: Dibromofluoromethane	*54.1*		ug/l	*50.0*		*108*	*70-130*			

This laboratory report is not valid without an authorized signature on the cover page.

*Reportable Detection Limit BRL = Below Reporting Limit

Volatile Organic Compounds - Quality Control

Analyte(s)	Result	*RDL	Units	Spike Level	Source Result	%REC	%REC Limits	RPD	RPD Limit	Flag
Batch 4061136 - Volatiles										
Blank (4061136-BLK1)				Prepared & Analyzed: 18-Jun-04						
Acetone	BRL	20.0	ug/l							
Acrylonitrile	BRL	1.0	ug/l							
Benzene	BRL	1.0	ug/l							
Bromobenzene	BRL	1.0	ug/l							
Bromochloromethane	BRL	1.0	ug/l							
Bromodichloromethane	BRL	1.0	ug/l							
Bromoform	BRL	1.0	ug/l							
Bromomethane	BRL	2.0	ug/l							
2-Butanone (MEK)	BRL	10.0	ug/l							
n-Butylbenzene	BRL	1.0	ug/l							
sec-Butylbenzene	BRL	1.0	ug/l							
tert-Butylbenzene	BRL	1.0	ug/l							
Carbon disulfide	BRL	5.0	ug/l							
Carbon tetrachloride	BRL	1.0	ug/l							
Chlorobenzene	BRL	1.0	ug/l							
Chloroethane	BRL	2.0	ug/l							
Chloroform	BRL	1.0	ug/l							
Chloromethane	BRL	2.0	ug/l							
2-Chlorotoluene	BRL	1.0	ug/l							
4-Chlorotoluene	BRL	1.0	ug/l							
1,2-Dibromo-3-chloropropane	BRL	2.0	ug/l							
Dibromochloromethane	BRL	1.0	ug/l							
1,2-Dibromoethane (EDB)	BRL	1.0	ug/l							
Dibromomethane	BRL	1.0	ug/l							
1,2-Dichlorobenzene	BRL	1.0	ug/l							
1,3-Dichlorobenzene	BRL	1.0	ug/l							
1,4-Dichlorobenzene	BRL	1.0	ug/l							
Dichlorodifluoromethane (Freon12)	BRL	2.0	ug/l							
1,1-Dichloroethane	BRL	1.0	ug/l							
1,2-Dichloroethane	BRL	1.0	ug/l							
1,1-Dichloroethene	BRL	1.0	ug/l							
cis-1,2-Dichloroethene	BRL	1.0	ug/l							
trans-1,2-Dichloroethene	BRL	1.0	ug/l							
1,2-Dichloropropane	BRL	1.0	ug/l							
1,3-Dichloropropane	BRL	1.0	ug/l							
2,2-Dichloropropane	BRL	1.0	ug/l							
1,1-Dichloropropene	BRL	1.0	ug/l							
cis-1,3-Dichloropropene	BRL	1.0	ug/l							
trans-1,3-Dichloropropene	BRL	1.0	ug/l							
Ethylbenzene	BRL	1.0	ug/l							
Hexachlorobutadiene	BRL	1.0	ug/l							
2-Hexanone (MBK)	BRL	10.0	ug/l							
Isopropylbenzene	BRL	1.0	ug/l							
4-Isopropyltoluene	BRL	1.0	ug/l							
Methyl tert-butyl ether	BRL	1.0	ug/l							
4-Methyl-2-pentanone (MIBK)	BRL	10.0	ug/l							
Methylene chloride	BRL	10.0	ug/l							
Naphthalene	BRL	1.0	ug/l							
n-Propylbenzene	BRL	1.0	ug/l							
Styrene	BRL	1.0	ug/l							
1,1,1,2-Tetrachloroethane	BRL	1.0	ug/l							
1,1,2,2-Tetrachloroethane	BRL	1.0	ug/l							
Tetrachloroethene	BRL	1.0	ug/l							
Toluene	BRL	1.0	ug/l							

Volatile Organic Compounds - Quality Control

Analyte(s)	Result	*RDL	Units	Spike Level	Source Result	%REC	%REC Limits	RPD	RPD Limit	Flag
Batch 4061136 - Volatiles										
Blank (4061136-BLK1)				Prepared & Analyzed: 18-Jun-04						
1,2,3-Trichlorobenzene	BRL	1.0	ug/l							
1,2,4-Trichlorobenzene	BRL	1.0	ug/l							
1,1,1-Trichloroethane	BRL	1.0	ug/l							
1,1,2-Trichloroethane	BRL	1.0	ug/l							
Trichloroethene	BRL	1.0	ug/l							
Trichlorofluoromethane (Freon 11)	BRL	1.0	ug/l							
1,2,3-Trichloropropane	BRL	1.0	ug/l							
1,2,4-Trimethylbenzene	BRL	1.0	ug/l							
1,3,5-Trimethylbenzene	BRL	1.0	ug/l							
Vinyl chloride	BRL	1.0	ug/l							
m,p-Xylene	BRL	2.0	ug/l							
o-Xylene	BRL	1.0	ug/l							
Surrogate: 4-Bromofluorobenzene	*47.5*		ug/l	*50.0*		*95.0*	*70-130*			
Surrogate: Toluene-d8	*45.4*		ug/l	*50.0*		*90.8*	*70-130*			
Surrogate: 1,2-Dichloroethane-d4	*50.2*		ug/l	*50.0*		*100*	*70-130*			
Surrogate: Dibromofluoromethane	*52.3*		ug/l	*50.0*		*105*	*70-130*			
Matrix Spike (4061136-MS1)		**Source: SA13934-04**		Prepared & Analyzed: 18-Jun-04						
Benzene	16.9		ug/l	20.0	BRL	84.5	70-130			
Chlorobenzene	17.6		ug/l	20.0	BRL	88.0	70-130			
1,1-Dichloroethene	16.0		ug/l	20.0	BRL	80.0	70-130			
Toluene	17.7		ug/l	20.0	BRL	88.5	70-130			
Trichloroethene	18.0		ug/l	20.0	BRL	90.0	70-130			
Surrogate: 4-Bromofluorobenzene	*48.7*		ug/l	*50.0*		*97.4*	*70-130*			
Surrogate: Toluene-d8	*49.7*		ug/l	*50.0*		*99.4*	*70-130*			
Surrogate: 1,2-Dichloroethane-d4	*57.0*		ug/l	*50.0*		*114*	*70-130*			
Surrogate: Dibromofluoromethane	*55.9*		ug/l	*50.0*		*112*	*70-130*			
Matrix Spike Dup (4061136-MSD1)		**Source: SA13934-04**		Prepared & Analyzed: 18-Jun-04						
Benzene	17.1		ug/l	20.0	BRL	85.5	70-130	1.18	30	
Chlorobenzene	18.1		ug/l	20.0	BRL	90.5	70-130	2.80	30	
1,1-Dichloroethene	16.5		ug/l	20.0	BRL	82.5	70-130	3.08	30	
Toluene	18.6		ug/l	20.0	BRL	93.0	70-130	4.96	30	
Trichloroethene	18.1		ug/l	20.0	BRL	90.5	70-130	0.554	30	
Surrogate: 4-Bromofluorobenzene	*47.9*		ug/l	*50.0*		*95.8*	*70-130*			
Surrogate: Toluene-d8	*51.2*		ug/l	*50.0*		*102*	*70-130*			
Surrogate: 1,2-Dichloroethane-d4	*54.4*		ug/l	*50.0*		*109*	*70-130*			
Surrogate: Dibromofluoromethane	*54.7*		ug/l	*50.0*		*109*	*70-130*			

Notes and Definitions

E	The concentration indicated for this analyte is an estimated value above the calibration range of the instrument. This value is considered an estimate (CLP E-flag).
BRL	Below Reporting Limit - Analyte NOT DETECTED at or above the reporting limit
dry	Sample results reported on a dry weight basis
NR	Not Reported
RPD	Relative Percent Difference

Laboratory Control Sample (LCS): A known matrix spiked with compound(s) representative of the target analytes, which is used to document laboratory performance.

Matrix Duplicate: An intra-laboratory split sample which is used to document the precision of a method in a given sample matrix.

Matrix Spike: An aliquot of a sample spiked with a known concentration of target analyte(s). The spiking occurs prior to sample preparation and analysis. A matrix spike is used to document the bias of a method in a given sample matrix.

Method Blank: An analyte-free matrix to which all reagents are added in the same volumes or proportions as used in sample processing. The method blank should be carried through the complete sample preparation and analytical procedure. The method blank is used to document contamination resulting from the analytical process.

Method Detection Limit (MDL): The minimum concentration of a substance that can be measured and reported with 99% confidence that the analyte concentration is greater than zero and is determined from analysis of a sample in a given matrix type containing the analyte.

Reportable Detection Limit (RDL): The lowest concentration that can be reliably achieved within specified limits of precision and accuracy during routine laboratory operating conditions. The RDL is generally 5 to 10 times the MDL. However, it may be nominally chosen within these guidelines to simplify data reporting. For many analytes the RDL analyte concentration is selected as the lowest non-zero standard in the calibration curve. Sample RDLs are highly matrix-dependent.

Surrogate: An organic compound which is similar to the target analyte(s) in chemical composition and behavior in the analytical process, but which is not normally found in environmental samples. These compounds are spiked into all blanks, standards, and samples prior to analysis. Percent recoveries are calculated for each surrogate.

Validated by:
Hanibal C. Tayeh, Ph.D.
Nicole Brown

SA13918HM

SPECTRUM ANALYTICAL, INC.
Featuring
ERM-Mitchell Technology, Inc.

CHAIN OF CUSTODY RECORD

Page 1 of 1

Special Handling:
- ☐ Standard TAT - 7 to 10 business days
- ☒ Rush TAT - Date Needed: 6/18/04
- All TATs subject to laboratory approval. Min. 24-hour notification needed for rushes.
- Samples disposed of after 60 days unless otherwise instructed.

Report To: Two Hartford Square West, Suite 310
146 Wyllys Street
Hartford, CT 06106

Project Mgr.: Bob Drake

Invoice To: Same
WH 4000434 (OK)

P.O. No.: _____ RQN: _____

Project No.: 0016718
Site Name: Intelidata
Location: New Milford State: CT
Sampler(s): J. Fernet

1=Na_2S2O_3 2=HCl 3=H_2SO_4 4=HNO_3 5=NaOH 6=Ascorbic Acid
7=CH_3OH 8= $NaHSO_4$ 9=_____ 10=_____

DW=Drinking Water GW=Groundwater WW=Wastewater
O=Oil SW= Surface Water SO=Soil SL=Sludge A=Air
X1=_____ X2=_____ X3=_____

G=Grab C=Composite

Lab Id:	Sample Id:	Date:	Time:	Type	Matrix	Preservative	Containers: # of VOA Vials	# of Amber Glass	# of Clear Glass	# of Plastic		Analyses: 8260								QA Reporting Notes: (check if needed)
SA13918-01	ASW-1	6/15/04	0930	G	GW	2	2					X								State specific reporting standards *If applicable, please list below.*
-02	ASW-2	6/15/04	1035	G	GW	2	2					X								☐ Provide MCP CAM Report Were all field QC requirements met as per MADEP CAM Section 2.0? ☐ Yes ☐ No *(Response required for CAM report)*
-03	Trip Blank	~~6/15/04~~	—	G	-	2	1					X								

☒ Fax results when available to (860) 524-5680
☐ E-mail to _____
EDD Format _____

Condition upon receipt: ☐ Iced ☐ Ambient ☐ °C 0

Relinquished by:	Received by:	Date:	Time:
[signature]	[signature]	6/15/04	1320
[signature]	[signature]	6/15/04	1438

11 Almgren Drive • Agawam, Massachusetts 01001 • 413-789-9018 • Fax 413-789-4076 • www.spectrum-analytical.com

in refrigerator

Report Date:
27-Sep-04 08:52

☐ Final Report
☐ Re-Issued Report
☑ Revised Report

SPECTRUM ANALYTICAL, INC.
Featuring
HANIBAL TECHNOLOGY

Laboratory Report

Environmental Resources Management
146 Wyllys Street, Suite 300
Hartford, CT 06106
Attn: Robert Drake

Project:Intelidata - New Milford, CT
Project #:0016718

Laboratory ID	Client Sample ID	Matrix	Date Sampled	Date Received
SA13928-01	SVE-1a	Soil	11-Jun-04 09:50	15-Jun-04 14:30
SA13928-02	ASW-2a	Soil	11-Jun-04 11:40	15-Jun-04 14:30
SA13928-03	SVMP-1a	Soil	11-Jun-04 13:50	15-Jun-04 14:30
SA13928-04	SVE-2a	Soil	11-Jun-04 14:20	15-Jun-04 14:30
SA13928-05	SVMP-5a	Soil	11-Jun-04 16:30	15-Jun-04 14:30
SA13928-06	SVMP-6a	Soil	11-Jun-04 17:25	15-Jun-04 14:30
SA13928-07	SVMP-4a	Soil	12-Jun-04 09:10	15-Jun-04 14:30
SA13928-08	SVMP-3a	Soil	12-Jun-04 10:00	15-Jun-04 14:30
SA13928-09	ASMP-2a	Soil	12-Jun-04 10:50	15-Jun-04 14:30
SA13928-10	ASW-1a	Soil	12-Jun-04 14:00	15-Jun-04 14:30
SA13928-11	Char Drum	Soil	14-Jun-04 10:20	15-Jun-04 14:30
SA13928-12	Trip Blank	Aqueous	05-Jun-04 00:00	15-Jun-04 14:30

I attest that the information contained within the report has been reviewed for accuracy and checked against the quality control requirements for each method. All applicable NELAC requirements have been met.
Please note that this report contains 34 pages of analytical data plus Chain of Custody document(s).
This report may not be reproduced, except in full, without written approval from Spectrum Analytical, Inc.

Massachusetts Certification # M-MA138/MA1110
Connecticut # PH-0777
Florida # E87600/E87936
Maine # MA138
New Hampshire # 2538
New York # 11393/11840
Rhode Island # 98

ACCREDITED IN ACCORDANCE WITH nelac

Authorized by:

Hanibal C. Tayeh, Ph.D.
President/Laboratory Director

Spectrum Analytical, Inc. is a NELAC accredited laboratory organization and meets NELAC testing standards. Use of the NELAC logo however does not insure that Spectrum is currently accredited for the specific method indicated. Please refer to our "Quality" webpage at www.spectrum-analytical.com for a full listing of our current certifications.

Sample Identification	Client Project #	Matrix	Collection Date/Time	Received
SVE-1a	0016718	Soil	11-Jun-04 09:50	15-Jun-04
SA13928-01				

Analyte(s)	*Result*	**RDL/Units*	*Dilution*	*Method Ref.*	*Prepared*	*Analyzed*	*Batch*	*Analyst*	*Flag*
Volatile Organic Compounds									
VOC Extraction	Field extracted	N/A	1	VOC	16-Jun-04	16-Jun-04	4061032	LN	
Volatile Organic Compounds by SW846 8260B		Prepared by method SW846 5035A Soil (low level)							VOC10
Acetone	139	79.4 ug/kg dry	1	SW846 8260B	17-Jun-04	17-Jun-04	4061088	tim	VOC6
Acrylonitrile	BRL	4.0 ug/kg dry	1	"	"	"	"	"	
Benzene	BRL	4.0 ug/kg dry	1	"	"	"	"	"	
Bromobenzene	BRL	4.0 ug/kg dry	1	"	"	"	"	"	
Bromochloromethane	BRL	4.0 ug/kg dry	1	"	"	"	"	"	
Bromodichloromethane	BRL	4.0 ug/kg dry	1	"	"	"	"	"	
Bromoform	BRL	4.0 ug/kg dry	1	"	"	"	"	"	
Bromomethane	BRL	7.9 ug/kg dry	1	"	"	"	"	"	
2-Butanone (MEK)	BRL	39.7 ug/kg dry	1	"	"	"	"	"	
n-Butylbenzene	BRL	4.0 ug/kg dry	1	"	"	"	"	"	
sec-Butylbenzene	BRL	4.0 ug/kg dry	1	"	"	"	"	"	
tert-Butylbenzene	BRL	4.0 ug/kg dry	1	"	"	"	"	"	
Carbon disulfide	BRL	19.9 ug/kg dry	1	"	"	"	"	"	
Carbon tetrachloride	BRL	4.0 ug/kg dry	1	"	"	"	"	"	
Chlorobenzene	BRL	4.0 ug/kg dry	1	"	"	"	"	"	
Chloroethane	BRL	7.9 ug/kg dry	1	"	"	"	"	"	
Chloroform	BRL	4.0 ug/kg dry	1	"	"	"	"	"	
Chloromethane	BRL	7.9 ug/kg dry	1	"	"	"	"	"	
2-Chlorotoluene	BRL	4.0 ug/kg dry	1	"	"	"	"	"	
4-Chlorotoluene	BRL	4.0 ug/kg dry	1	"	"	"	"	"	
1,2-Dibromo-3-chloropropane	BRL	7.9 ug/kg dry	1	"	"	"	"	"	
Dibromochloromethane	BRL	4.0 ug/kg dry	1	"	"	"	"	"	
1,2-Dibromoethane (EDB)	BRL	4.0 ug/kg dry	1	"	"	"	"	"	
Dibromomethane	BRL	4.0 ug/kg dry	1	"	"	"	"	"	
1,2-Dichlorobenzene	BRL	4.0 ug/kg dry	1	"	"	"	"	"	
1,3-Dichlorobenzene	BRL	4.0 ug/kg dry	1	"	"	"	"	"	
1,4-Dichlorobenzene	BRL	4.0 ug/kg dry	1	"	"	"	"	"	
Dichlorodifluoromethane (Freon12)	BRL	7.9 ug/kg dry	1	"	"	"	"	"	
1,1-Dichloroethane	BRL	4.0 ug/kg dry	1	"	"	"	"	"	
1,2-Dichloroethane	BRL	4.0 ug/kg dry	1	"	"	"	"	"	
1,1-Dichloroethene	BRL	4.0 ug/kg dry	1	"	"	"	"	"	
cis-1,2-Dichloroethene	BRL	4.0 ug/kg dry	1	"	"	"	"	"	
trans-1,2-Dichloroethene	BRL	4.0 ug/kg dry	1	"	"	"	"	"	
1,2-Dichloropropane	BRL	4.0 ug/kg dry	1	"	"	"	"	"	
1,3-Dichloropropane	BRL	4.0 ug/kg dry	1	"	"	"	"	"	
2,2-Dichloropropane	BRL	4.0 ug/kg dry	1	"	"	"	"	"	
1,1-Dichloropropene	BRL	4.0 ug/kg dry	1	"	"	"	"	"	
cis-1,3-Dichloropropene	BRL	4.0 ug/kg dry	1	"	"	"	"	"	
trans-1,3-Dichloropropene	BRL	4.0 ug/kg dry	1	"	"	"	"	"	
Ethylbenzene	BRL	4.0 ug/kg dry	1	"	"	"	"	"	
Hexachlorobutadiene	BRL	4.0 ug/kg dry	1	"	"	"	"	"	
2-Hexanone (MBK)	BRL	39.7 ug/kg dry	1	"	"	"	"	"	
Isopropylbenzene	BRL	4.0 ug/kg dry	1	"	"	"	"	"	
4-Isopropyltoluene	BRL	4.0 ug/kg dry	1	"	"	"	"	"	
Methyl tert-butyl ether	BRL	4.0 ug/kg dry	1	"	"	"	"	"	

Sample Identification	Client Project #	Matrix	Collection Date/Time	Received
SVE-1a SA13928-01	0016718	Soil	11-Jun-04 09:50	15-Jun-04

Analyte(s)	*Result*	**RDL/Units*	*Dilution*	*Method Ref.*	*Prepared*	*Analyzed*	*Batch*	*Analyst*	*Flag*
Volatile Organic Compounds									
Volatile Organic Compounds by SW846 8260B		Prepared by method SW846 5035A Soil (low level)							VOC10
4-Methyl-2-pentanone (MIBK)	BRL	39.7 ug/kg dry	1	SW846 8260B	17-Jun-04	17-Jun-04	4061088	tim	
Methylene chloride	BRL	39.7 ug/kg dry	1	"	"	"	"	"	
Naphthalene	BRL	4.0 ug/kg dry	1	"	"	"	"	"	
n-Propylbenzene	BRL	4.0 ug/kg dry	1	"	"	"	"	"	
Styrene	BRL	4.0 ug/kg dry	1	"	"	"	"	"	
1,1,1,2-Tetrachloroethane	BRL	4.0 ug/kg dry	1	"	"	"	"	"	
1,1,2,2-Tetrachloroethane	BRL	4.0 ug/kg dry	1	"	"	"	"	"	
Tetrachloroethene	BRL	4.0 ug/kg dry	1	"	"	"	"	"	
Toluene	BRL	4.0 ug/kg dry	1	"	"	"	"	"	
1,2,3-Trichlorobenzene	BRL	4.0 ug/kg dry	1	"	"	"	"	"	
1,2,4-Trichlorobenzene	BRL	4.0 ug/kg dry	1	"	"	"	"	"	
1,1,1-Trichloroethane	BRL	4.0 ug/kg dry	1	"	"	"	"	"	
1,1,2-Trichloroethane	BRL	4.0 ug/kg dry	1	"	"	"	"	"	
Trichloroethene	BRL	4.0 ug/kg dry	1	"	"	"	"	"	
Trichlorofluoromethane (Freon 11)	BRL	4.0 ug/kg dry	1	"	"	"	"	"	
1,2,3-Trichloropropane	BRL	4.0 ug/kg dry	1	"	"	"	"	"	
1,2,4-Trimethylbenzene	BRL	4.0 ug/kg dry	1	"	"	"	"	"	
1,3,5-Trimethylbenzene	BRL	4.0 ug/kg dry	1	"	"	"	"	"	
Vinyl chloride	BRL	4.0 ug/kg dry	1	"	"	"	"	"	
m,p-Xylene	BRL	7.9 ug/kg dry	1	"	"	"	"	"	
o-Xylene	BRL	4.0 ug/kg dry	1	"	"	"	"	"	
Surrogate: 4-Bromofluorobenzene	*93.6*	*70-130 %*		"	"	"	"	"	
Surrogate: Toluene-d8	*101*	*70-130 %*		"	"	"	"	"	
Surrogate: 1,2-Dichloroethane-d4	*112*	*70-130 %*		"	"	"	"	"	
Surrogate: Dibromofluoromethane	*105*	*70-130 %*		"	"	"	"	"	
General Chemistry Parameters									
% Solids	95.6	%	1	SM2540 G Mod.	16-Jun-04	17-Jun-04	4061002	LN	

Sample Identification	Client Project #	Matrix	Collection Date/Time	Received
ASW-2a SA13928-02	0016718	Soil	11-Jun-04 11:40	15-Jun-04

Analyte(s)	*Result*	**RDL/Units*	*Dilution*	*Method Ref.*	*Prepared*	*Analyzed*	*Batch*	*Analyst*	*Flag*
Volatile Organic Compounds									
VOC Extraction	Field extracted	N/A	1	VOC	16-Jun-04	16-Jun-04	4061032	LN	
Volatile Organic Compounds by SW846 8260B		Prepared by method SW846 5035A Soil (low level)							**VOC10**
Acetone	BRL	75.3 ug/kg dry	1	SW846 8260B	17-Jun-04	17-Jun-04	4061088	tim	
Acrylonitrile	BRL	3.8 ug/kg dry	1	"	"	"	"	"	
Benzene	BRL	3.8 ug/kg dry	1	"	"	"	"	"	
Bromobenzene	BRL	3.8 ug/kg dry	1	"	"	"	"	"	
Bromochloromethane	BRL	3.8 ug/kg dry	1	"	"	"	"	"	
Bromodichloromethane	BRL	3.8 ug/kg dry	1	"	"	"	"	"	
Bromoform	BRL	3.8 ug/kg dry	1	"	"	"	"	"	
Bromomethane	BRL	7.5 ug/kg dry	1	"	"	"	"	"	
2-Butanone (MEK)	BRL	37.7 ug/kg dry	1	"	"	"	"	"	
n-Butylbenzene	BRL	3.8 ug/kg dry	1	"	"	"	"	"	
sec-Butylbenzene	BRL	3.8 ug/kg dry	1	"	"	"	"	"	
tert-Butylbenzene	BRL	3.8 ug/kg dry	1	"	"	"	"	"	
Carbon disulfide	BRL	18.8 ug/kg dry	1	"	"	"	"	"	
Carbon tetrachloride	BRL	3.8 ug/kg dry	1	"	"	"	"	"	
Chlorobenzene	BRL	3.8 ug/kg dry	1	"	"	"	"	"	
Chloroethane	BRL	7.5 ug/kg dry	1	"	"	"	"	"	
Chloroform	BRL	3.8 ug/kg dry	1	"	"	"	"	"	
Chloromethane	BRL	7.5 ug/kg dry	1	"	"	"	"	"	
2-Chlorotoluene	BRL	3.8 ug/kg dry	1	"	"	"	"	"	
4-Chlorotoluene	BRL	3.8 ug/kg dry	1	"	"	"	"	"	
1,2-Dibromo-3-chloropropane	BRL	7.5 ug/kg dry	1	"	"	"	"	"	
Dibromochloromethane	BRL	3.8 ug/kg dry	1	"	"	"	"	"	
1,2-Dibromoethane (EDB)	BRL	3.8 ug/kg dry	1	"	"	"	"	"	
Dibromomethane	BRL	3.8 ug/kg dry	1	"	"	"	"	"	
1,2-Dichlorobenzene	BRL	3.8 ug/kg dry	1	"	"	"	"	"	
1,3-Dichlorobenzene	BRL	3.8 ug/kg dry	1	"	"	"	"	"	
1,4-Dichlorobenzene	BRL	3.8 ug/kg dry	1	"	"	"	"	"	
Dichlorodifluoromethane (Freon12)	BRL	7.5 ug/kg dry	1	"	"	"	"	"	
1,1-Dichloroethane	BRL	3.8 ug/kg dry	1	"	"	"	"	"	
1,2-Dichloroethane	BRL	3.8 ug/kg dry	1	"	"	"	"	"	
1,1-Dichloroethene	BRL	3.8 ug/kg dry	1	"	"	"	"	"	
cis-1,2-Dichloroethene	BRL	3.8 ug/kg dry	1	"	"	"	"	"	
trans-1,2-Dichloroethene	BRL	3.8 ug/kg dry	1	"	"	"	"	"	
1,2-Dichloropropane	BRL	3.8 ug/kg dry	1	"	"	"	"	"	
1,3-Dichloropropane	BRL	3.8 ug/kg dry	1	"	"	"	"	"	
2,2-Dichloropropane	BRL	3.8 ug/kg dry	1	"	"	"	"	"	
1,1-Dichloropropene	BRL	3.8 ug/kg dry	1	"	"	"	"	"	
cis-1,3-Dichloropropene	BRL	3.8 ug/kg dry	1	"	"	"	"	"	
trans-1,3-Dichloropropene	BRL	3.8 ug/kg dry	1	"	"	"	"	"	
Ethylbenzene	BRL	3.8 ug/kg dry	1	"	"	"	"	"	
Hexachlorobutadiene	BRL	3.8 ug/kg dry	1	"	"	"	"	"	
2-Hexanone (MBK)	BRL	37.7 ug/kg dry	1	"	"	"	"	"	
Isopropylbenzene	BRL	3.8 ug/kg dry	1	"	"	"	"	"	
4-Isopropyltoluene	BRL	3.8 ug/kg dry	1	"	"	"	"	"	
Methyl tert-butyl ether	BRL	3.8 ug/kg dry	1	"	"	"	"	"	

Sample Identification	Client Project #	Matrix	Collection Date/Time	Received
ASW-2a SA13928-02	0016718	Soil	11-Jun-04 11:40	15-Jun-04

Analyte(s)	*Result*	**RDL/Units*	*Dilution*	*Method Ref.*	*Prepared*	*Analyzed*	*Batch*	*Analyst*	*Flag*
Volatile Organic Compounds									
Volatile Organic Compounds by SW846 8260B		Prepared by method SW846 5035A Soil (low level)							VOC10
4-Methyl-2-pentanone (MIBK)	BRL	37.7 ug/kg dry	1	SW846 8260B	17-Jun-04	17-Jun-04	4061088	tim	
Methylene chloride	BRL	37.7 ug/kg dry	1	"	"	"	"	"	
Naphthalene	BRL	3.8 ug/kg dry	1	"	"	"	"	"	
n-Propylbenzene	BRL	3.8 ug/kg dry	1	"	"	"	"	"	
Styrene	BRL	3.8 ug/kg dry	1	"	"	"	"	"	
1,1,1,2-Tetrachloroethane	BRL	3.8 ug/kg dry	1	"	"	"	"	"	
1,1,2,2-Tetrachloroethane	BRL	3.8 ug/kg dry	1	"	"	"	"	"	
Tetrachloroethene	BRL	3.8 ug/kg dry	1	"	"	"	"	"	
Toluene	BRL	3.8 ug/kg dry	1	"	"	"	"	"	
1,2,3-Trichlorobenzene	BRL	3.8 ug/kg dry	1	"	"	"	"	"	
1,2,4-Trichlorobenzene	BRL	3.8 ug/kg dry	1	"	"	"	"	"	
1,1,1-Trichloroethane	BRL	3.8 ug/kg dry	1	"	"	"	"	"	
1,1,2-Trichloroethane	BRL	3.8 ug/kg dry	1	"	"	"	"	"	
Trichloroethene	BRL	3.8 ug/kg dry	1	"	"	"	"	"	
Trichlorofluoromethane (Freon 11)	BRL	3.8 ug/kg dry	1	"	"	"	"	"	
1,2,3-Trichloropropane	BRL	3.8 ug/kg dry	1	"	"	"	"	"	
1,2,4-Trimethylbenzene	BRL	3.8 ug/kg dry	1	"	"	"	"	"	
1,3,5-Trimethylbenzene	BRL	3.8 ug/kg dry	1	"	"	"	"	"	
Vinyl chloride	BRL	3.8 ug/kg dry	1	"	"	"	"	"	
m,p-Xylene	BRL	7.5 ug/kg dry	1	"	"	"	"	"	
o-Xylene	BRL	3.8 ug/kg dry	1	"	"	"	"	"	
Surrogate: 4-Bromofluorobenzene	*95.8*	*70-130 %*		"	"	"	"	"	
Surrogate: Toluene-d8	*102*	*70-130 %*		"	"	"	"	"	
Surrogate: 1,2-Dichloroethane-d4	*115*	*70-130 %*		"	"	"	"	"	
Surrogate: Dibromofluoromethane	*106*	*70-130 %*		"	"	"	"	"	
General Chemistry Parameters									
% Solids	86.1	%	1	SM2540 G Mod.	16-Jun-04	17-Jun-04	4061002	LN	

Sample Identification	Client Project #	Matrix	Collection Date/Time	Received
SVMP-1a SA13928-03	0016718	Soil	11-Jun-04 13:50	15-Jun-04

Analyte(s)	*Result*	**RDL/Units*	*Dilution*	*Method Ref.*	*Prepared*	*Analyzed*	*Batch*	*Analyst*	*Flag*
Volatile Organic Compounds									
VOC Extraction	Field extracted	N/A	1	VOC	16-Jun-04	16-Jun-04	4061032	LN	
Volatile Organic Compounds by SW846 8260B		Prepared by method SW846 5035A Soil (low level)							
Acetone	175	92.3 ug/kg dry	1	SW846 8260B	17-Jun-04	17-Jun-04	4061088	tim	VOC6
Acrylonitrile	BRL	4.6 ug/kg dry	1	"	"	"	"	"	
Benzene	BRL	4.6 ug/kg dry	1	"	"	"	"	"	
Bromobenzene	BRL	4.6 ug/kg dry	1	"	"	"	"	"	
Bromochloromethane	BRL	4.6 ug/kg dry	1	"	"	"	"	"	
Bromodichloromethane	BRL	4.6 ug/kg dry	1	"	"	"	"	"	
Bromoform	BRL	4.6 ug/kg dry	1	"	"	"	"	"	
Bromomethane	BRL	9.2 ug/kg dry	1	"	"	"	"	"	
2-Butanone (MEK)	BRL	46.1 ug/kg dry	1	"	"	"	"	"	
n-Butylbenzene	BRL	4.6 ug/kg dry	1	"	"	"	"	"	
sec-Butylbenzene	BRL	4.6 ug/kg dry	1	"	"	"	"	"	
tert-Butylbenzene	BRL	4.6 ug/kg dry	1	"	"	"	"	"	
Carbon disulfide	BRL	23.1 ug/kg dry	1	"	"	"	"	"	
Carbon tetrachloride	BRL	4.6 ug/kg dry	1	"	"	"	"	"	
Chlorobenzene	BRL	4.6 ug/kg dry	1	"	"	"	"	"	
Chloroethane	BRL	9.2 ug/kg dry	1	"	"	"	"	"	
Chloroform	BRL	4.6 ug/kg dry	1	"	"	"	"	"	
Chloromethane	BRL	9.2 ug/kg dry	1	"	"	"	"	"	
2-Chlorotoluene	BRL	4.6 ug/kg dry	1	"	"	"	"	"	
4-Chlorotoluene	BRL	4.6 ug/kg dry	1	"	"	"	"	"	
1,2-Dibromo-3-chloropropane	BRL	9.2 ug/kg dry	1	"	"	"	"	"	
Dibromochloromethane	BRL	4.6 ug/kg dry	1	"	"	"	"	"	
1,2-Dibromoethane (EDB)	BRL	4.6 ug/kg dry	1	"	"	"	"	"	
Dibromomethane	BRL	4.6 ug/kg dry	1	"	"	"	"	"	
1,2-Dichlorobenzene	BRL	4.6 ug/kg dry	1	"	"	"	"	"	
1,3-Dichlorobenzene	BRL	4.6 ug/kg dry	1	"	"	"	"	"	
1,4-Dichlorobenzene	BRL	4.6 ug/kg dry	1	"	"	"	"	"	
Dichlorodifluoromethane (Freon12)	BRL	9.2 ug/kg dry	1	"	"	"	"	"	
1,1-Dichloroethane	BRL	4.6 ug/kg dry	1	"	"	"	"	"	
1,2-Dichloroethane	BRL	4.6 ug/kg dry	1	"	"	"	"	"	
1,1-Dichloroethene	BRL	4.6 ug/kg dry	1	"	"	"	"	"	
cis-1,2-Dichloroethene	BRL	4.6 ug/kg dry	1	"	"	"	"	"	
trans-1,2-Dichloroethene	BRL	4.6 ug/kg dry	1	"	"	"	"	"	
1,2-Dichloropropane	BRL	4.6 ug/kg dry	1	"	"	"	"	"	
1,3-Dichloropropane	BRL	4.6 ug/kg dry	1	"	"	"	"	"	
2,2-Dichloropropane	BRL	4.6 ug/kg dry	1	"	"	"	"	"	
1,1-Dichloropropene	BRL	4.6 ug/kg dry	1	"	"	"	"	"	
cis-1,3-Dichloropropene	BRL	4.6 ug/kg dry	1	"	"	"	"	"	
trans-1,3-Dichloropropene	BRL	4.6 ug/kg dry	1	"	"	"	"	"	
Ethylbenzene	BRL	4.6 ug/kg dry	1	"	"	"	"	"	
Hexachlorobutadiene	BRL	4.6 ug/kg dry	1	"	"	"	"	"	
2-Hexanone (MBK)	BRL	46.1 ug/kg dry	1	"	"	"	"	"	
Isopropylbenzene	BRL	4.6 ug/kg dry	1	"	"	"	"	"	
4-Isopropyltoluene	BRL	4.6 ug/kg dry	1	"	"	"	"	"	
Methyl tert-butyl ether	BRL	4.6 ug/kg dry	1	"	"	"	"	"	

Sample Identification	Client Project #	Matrix	Collection Date/Time	Received
SVMP-1a SA13928-03	0016718	Soil	11-Jun-04 13:50	15-Jun-04

Analyte(s)	*Result*	**RDL/Units*	*Dilution*	*Method Ref.*	*Prepared*	*Analyzed*	*Batch*	*Analyst*	*Flag*
Volatile Organic Compounds									
Volatile Organic Compounds by SW846 8260B		Prepared by method SW846 5035A Soil (low level)							
4-Methyl-2-pentanone (MIBK)	BRL	46.1 ug/kg dry	1	SW846 8260B	17-Jun-04	17-Jun-04	4061088	tim	
Methylene chloride	BRL	46.1 ug/kg dry	1	"	"	"	"	"	
Naphthalene	BRL	4.6 ug/kg dry	1	"	"	"	"	"	
n-Propylbenzene	BRL	4.6 ug/kg dry	1	"	"	"	"	"	
Styrene	BRL	4.6 ug/kg dry	1	"	"	"	"	"	
1,1,1,2-Tetrachloroethane	BRL	4.6 ug/kg dry	1	"	"	"	"	"	
1,1,2,2-Tetrachloroethane	BRL	4.6 ug/kg dry	1	"	"	"	"	"	
Tetrachloroethene	BRL	4.6 ug/kg dry	1	"	"	"	"	"	
Toluene	BRL	4.6 ug/kg dry	1	"	"	"	"	"	
1,2,3-Trichlorobenzene	BRL	4.6 ug/kg dry	1	"	"	"	"	"	
1,2,4-Trichlorobenzene	BRL	4.6 ug/kg dry	1	"	"	"	"	"	
1,1,1-Trichloroethane	BRL	4.6 ug/kg dry	1	"	"	"	"	"	
1,1,2-Trichloroethane	BRL	4.6 ug/kg dry	1	"	"	"	"	"	
Trichloroethene	BRL	4.6 ug/kg dry	1	"	"	"	"	"	
Trichlorofluoromethane (Freon 11)	BRL	4.6 ug/kg dry	1	"	"	"	"	"	
1,2,3-Trichloropropane	BRL	4.6 ug/kg dry	1	"	"	"	"	"	
1,2,4-Trimethylbenzene	BRL	4.6 ug/kg dry	1	"	"	"	"	"	
1,3,5-Trimethylbenzene	BRL	4.6 ug/kg dry	1	"	"	"	"	"	
Vinyl chloride	BRL	4.6 ug/kg dry	1	"	"	"	"	"	
m,p-Xylene	BRL	9.2 ug/kg dry	1	"	"	"	"	"	
o-Xylene	BRL	4.6 ug/kg dry	1	"	"	"	"	"	
Surrogate: 4-Bromofluorobenzene	*95.4*	*70-130 %*		"	"	"	"	"	
Surrogate: Toluene-d8	*101*	*70-130 %*		"	"	"	"	"	
Surrogate: 1,2-Dichloroethane-d4	*115*	*70-130 %*		"	"	"	"	"	
Surrogate: Dibromofluoromethane	*106*	*70-130 %*		"	"	"	"	"	
General Chemistry Parameters									
% Solids	95.2	%	1	SM2540 G Mod.	16-Jun-04	17-Jun-04	4061002	LN	

Sample Identification	Client Project #	Matrix	Collection Date/Time	Received
SVE-2a SA13928-04	0016718	Soil	11-Jun-04 14:20	15-Jun-04

Analyte(s)	*Result*	**RDL/Units*	*Dilution*	*Method Ref.*	*Prepared*	*Analyzed*	*Batch*	*Analyst*	*Flag*
Volatile Organic Compounds									
VOC Extraction	Field extracted	N/A	1	VOC	16-Jun-04	16-Jun-04	4061032	LN	
Volatile Organic Compounds by SW846 8260B		Prepared by method SW846 5035A Soil (low level)							VOC10
Acetone	171	105 ug/kg dry	1	SW846 8260B	17-Jun-04	17-Jun-04	4061088	tim	VOC6
Acrylonitrile	BRL	5.2 ug/kg dry	1	"	"	"	"	"	
Benzene	BRL	5.2 ug/kg dry	1	"	"	"	"	"	
Bromobenzene	BRL	5.2 ug/kg dry	1	"	"	"	"	"	
Bromochloromethane	BRL	5.2 ug/kg dry	1	"	"	"	"	"	
Bromodichloromethane	BRL	5.2 ug/kg dry	1	"	"	"	"	"	
Bromoform	BRL	5.2 ug/kg dry	1	"	"	"	"	"	
Bromomethane	BRL	10.5 ug/kg dry	1	"	"	"	"	"	
2-Butanone (MEK)	BRL	52.3 ug/kg dry	1	"	"	"	"	"	
n-Butylbenzene	BRL	5.2 ug/kg dry	1	"	"	"	"	"	
sec-Butylbenzene	BRL	5.2 ug/kg dry	1	"	"	"	"	"	
tert-Butylbenzene	BRL	5.2 ug/kg dry	1	"	"	"	"	"	
Carbon disulfide	BRL	26.1 ug/kg dry	1	"	"	"	"	"	
Carbon tetrachloride	BRL	5.2 ug/kg dry	1	"	"	"	"	"	
Chlorobenzene	BRL	5.2 ug/kg dry	1	"	"	"	"	"	
Chloroethane	BRL	10.5 ug/kg dry	1	"	"	"	"	"	
Chloroform	BRL	5.2 ug/kg dry	1	"	"	"	"	"	
Chloromethane	BRL	10.5 ug/kg dry	1	"	"	"	"	"	
2-Chlorotoluene	BRL	5.2 ug/kg dry	1	"	"	"	"	"	
4-Chlorotoluene	BRL	5.2 ug/kg dry	1	"	"	"	"	"	
1,2-Dibromo-3-chloropropane	BRL	10.5 ug/kg dry	1	"	"	"	"	"	
Dibromochloromethane	BRL	5.2 ug/kg dry	1	"	"	"	"	"	
1,2-Dibromoethane (EDB)	BRL	5.2 ug/kg dry	1	"	"	"	"	"	
Dibromomethane	BRL	5.2 ug/kg dry	1	"	"	"	"	"	
1,2-Dichlorobenzene	BRL	5.2 ug/kg dry	1	"	"	"	"	"	
1,3-Dichlorobenzene	BRL	5.2 ug/kg dry	1	"	"	"	"	"	
1,4-Dichlorobenzene	BRL	5.2 ug/kg dry	1	"	"	"	"	"	
Dichlorodifluoromethane (Freon12)	BRL	10.5 ug/kg dry	1	"	"	"	"	"	
1,1-Dichloroethane	BRL	5.2 ug/kg dry	1	"	"	"	"	"	
1,2-Dichloroethane	BRL	5.2 ug/kg dry	1	"	"	"	"	"	
1,1-Dichloroethene	BRL	5.2 ug/kg dry	1	"	"	"	"	"	
cis-1,2-Dichloroethene	BRL	5.2 ug/kg dry	1	"	"	"	"	"	
trans-1,2-Dichloroethene	BRL	5.2 ug/kg dry	1	"	"	"	"	"	
1,2-Dichloropropane	BRL	5.2 ug/kg dry	1	"	"	"	"	"	
1,3-Dichloropropane	BRL	5.2 ug/kg dry	1	"	"	"	"	"	
2,2-Dichloropropane	BRL	5.2 ug/kg dry	1	"	"	"	"	"	
1,1-Dichloropropene	BRL	5.2 ug/kg dry	1	"	"	"	"	"	
cis-1,3-Dichloropropene	BRL	5.2 ug/kg dry	1	"	"	"	"	"	
trans-1,3-Dichloropropene	BRL	5.2 ug/kg dry	1	"	"	"	"	"	
Ethylbenzene	BRL	5.2 ug/kg dry	1	"	"	"	"	"	
Hexachlorobutadiene	BRL	5.2 ug/kg dry	1	"	"	"	"	"	
2-Hexanone (MBK)	BRL	52.3 ug/kg dry	1	"	"	"	"	"	
Isopropylbenzene	BRL	5.2 ug/kg dry	1	"	"	"	"	"	
4-Isopropyltoluene	BRL	5.2 ug/kg dry	1	"	"	"	"	"	
Methyl tert-butyl ether	BRL	5.2 ug/kg dry	1	"	"	"	"	"	

Sample Identification	Client Project #	Matrix	Collection Date/Time	Received
SVE-2a SA13928-04	0016718	Soil	11-Jun-04 14:20	15-Jun-04

Analyte(s)	*Result*	**RDL/Units*	*Dilution*	*Method Ref.*	*Prepared*	*Analyzed*	*Batch*	*Analyst*	*Flag*
Volatile Organic Compounds									
Volatile Organic Compounds by SW846 8260B		Prepared by method SW846 5035A Soil (low level)							VOC10
4-Methyl-2-pentanone (MIBK)	BRL	52.3 ug/kg dry	1	SW846 8260B	17-Jun-04	17-Jun-04	4061088	tim	
Methylene chloride	BRL	52.3 ug/kg dry	1	"	"	"	"	"	
Naphthalene	BRL	5.2 ug/kg dry	1	"	"	"	"	"	
n-Propylbenzene	BRL	5.2 ug/kg dry	1	"	"	"	"	"	
Styrene	BRL	5.2 ug/kg dry	1	"	"	"	"	"	
1,1,1,2-Tetrachloroethane	BRL	5.2 ug/kg dry	1	"	"	"	"	"	
1,1,2,2-Tetrachloroethane	BRL	5.2 ug/kg dry	1	"	"	"	"	"	
Tetrachloroethene	BRL	5.2 ug/kg dry	1	"	"	"	"	"	
Toluene	BRL	5.2 ug/kg dry	1	"	"	"	"	"	
1,2,3-Trichlorobenzene	BRL	5.2 ug/kg dry	1	"	"	"	"	"	
1,2,4-Trichlorobenzene	BRL	5.2 ug/kg dry	1	"	"	"	"	"	
1,1,1-Trichloroethane	BRL	5.2 ug/kg dry	1	"	"	"	"	"	
1,1,2-Trichloroethane	BRL	5.2 ug/kg dry	1	"	"	"	"	"	
Trichloroethene	BRL	5.2 ug/kg dry	1	"	"	"	"	"	
Trichlorofluoromethane (Freon 11)	BRL	5.2 ug/kg dry	1	"	"	"	"	"	
1,2,3-Trichloropropane	BRL	5.2 ug/kg dry	1	"	"	"	"	"	
1,2,4-Trimethylbenzene	BRL	5.2 ug/kg dry	1	"	"	"	"	"	
1,3,5-Trimethylbenzene	BRL	5.2 ug/kg dry	1	"	"	"	"	"	
Vinyl chloride	BRL	5.2 ug/kg dry	1	"	"	"	"	"	
m,p-Xylene	BRL	10.5 ug/kg dry	1	"	"	"	"	"	
o-Xylene	BRL	5.2 ug/kg dry	1	"	"	"	"	"	
Surrogate: 4-Bromofluorobenzene	*94.2*	*70-130 %*		"	"	"	"	"	
Surrogate: Toluene-d8	*102*	*70-130 %*		"	"	"	"	"	
Surrogate: 1,2-Dichloroethane-d4	*112*	*70-130 %*		"	"	"	"	"	
Surrogate: Dibromofluoromethane	*104*	*70-130 %*		"	"	"	"	"	
General Chemistry Parameters									
% Solids	87.2	%	1	SM2540 G Mod.	16-Jun-04	17-Jun-04	4061002	LN	

Sample Identification	Client Project #	Matrix	Collection Date/Time	Received
SVMP-5a SA13928-05	0016718	Soil	11-Jun-04 16:30	15-Jun-04

Analyte(s)	*Result*	**RDL/Units*	*Dilution*	*Method Ref.*	*Prepared*	*Analyzed*	*Batch*	*Analyst*	*Flag*
Volatile Organic Compounds									
VOC Extraction	Field extracted	N/A	1	VOC	16-Jun-04	16-Jun-04	4061032	LN	
Volatile Organic Compounds by SW846 8260B		Prepared by method SW846 5035A Soil (low level)							VOC10
Acetone	153	85.9 ug/kg dry	1	SW846 8260B	17-Jun-04	17-Jun-04	4061088	tim	VOC6
Acrylonitrile	BRL	4.3 ug/kg dry	1	"	"	"	"	"	
Benzene	BRL	4.3 ug/kg dry	1	"	"	"	"	"	
Bromobenzene	BRL	4.3 ug/kg dry	1	"	"	"	"	"	
Bromochloromethane	BRL	4.3 ug/kg dry	1	"	"	"	"	"	
Bromodichloromethane	BRL	4.3 ug/kg dry	1	"	"	"	"	"	
Bromoform	BRL	4.3 ug/kg dry	1	"	"	"	"	"	
Bromomethane	BRL	8.6 ug/kg dry	1	"	"	"	"	"	
2-Butanone (MEK)	BRL	42.9 ug/kg dry	1	"	"	"	"	"	
n-Butylbenzene	BRL	4.3 ug/kg dry	1	"	"	"	"	"	
sec-Butylbenzene	BRL	4.3 ug/kg dry	1	"	"	"	"	"	
tert-Butylbenzene	BRL	4.3 ug/kg dry	1	"	"	"	"	"	
Carbon disulfide	BRL	21.5 ug/kg dry	1	"	"	"	"	"	
Carbon tetrachloride	BRL	4.3 ug/kg dry	1	"	"	"	"	"	
Chlorobenzene	BRL	4.3 ug/kg dry	1	"	"	"	"	"	
Chloroethane	BRL	8.6 ug/kg dry	1	"	"	"	"	"	
Chloroform	BRL	4.3 ug/kg dry	1	"	"	"	"	"	
Chloromethane	BRL	8.6 ug/kg dry	1	"	"	"	"	"	
2-Chlorotoluene	BRL	4.3 ug/kg dry	1	"	"	"	"	"	
4-Chlorotoluene	BRL	4.3 ug/kg dry	1	"	"	"	"	"	
1,2-Dibromo-3-chloropropane	BRL	8.6 ug/kg dry	1	"	"	"	"	"	
Dibromochloromethane	BRL	4.3 ug/kg dry	1	"	"	"	"	"	
1,2-Dibromoethane (EDB)	BRL	4.3 ug/kg dry	1	"	"	"	"	"	
Dibromomethane	BRL	4.3 ug/kg dry	1	"	"	"	"	"	
1,2-Dichlorobenzene	BRL	4.3 ug/kg dry	1	"	"	"	"	"	
1,3-Dichlorobenzene	BRL	4.3 ug/kg dry	1	"	"	"	"	"	
1,4-Dichlorobenzene	BRL	4.3 ug/kg dry	1	"	"	"	"	"	
Dichlorodifluoromethane (Freon12)	BRL	8.6 ug/kg dry	1	"	"	"	"	"	
1,1-Dichloroethane	BRL	4.3 ug/kg dry	1	"	"	"	"	"	
1,2-Dichloroethane	BRL	4.3 ug/kg dry	1	"	"	"	"	"	
1,1-Dichloroethene	BRL	4.3 ug/kg dry	1	"	"	"	"	"	
cis-1,2-Dichloroethene	BRL	4.3 ug/kg dry	1	"	"	"	"	"	
trans-1,2-Dichloroethene	BRL	4.3 ug/kg dry	1	"	"	"	"	"	
1,2-Dichloropropane	BRL	4.3 ug/kg dry	1	"	"	"	"	"	
1,3-Dichloropropane	BRL	4.3 ug/kg dry	1	"	"	"	"	"	
2,2-Dichloropropane	BRL	4.3 ug/kg dry	1	"	"	"	"	"	
1,1-Dichloropropene	BRL	4.3 ug/kg dry	1	"	"	"	"	"	
cis-1,3-Dichloropropene	BRL	4.3 ug/kg dry	1	"	"	"	"	"	
trans-1,3-Dichloropropene	BRL	4.3 ug/kg dry	1	"	"	"	"	"	
Ethylbenzene	BRL	4.3 ug/kg dry	1	"	"	"	"	"	
Hexachlorobutadiene	BRL	4.3 ug/kg dry	1	"	"	"	"	"	
2-Hexanone (MBK)	BRL	42.9 ug/kg dry	1	"	"	"	"	"	
Isopropylbenzene	BRL	4.3 ug/kg dry	1	"	"	"	"	"	
4-Isopropyltoluene	BRL	4.3 ug/kg dry	1	"	"	"	"	"	
Methyl tert-butyl ether	BRL	4.3 ug/kg dry	1	"	"	"	"	"	

Sample Identification	Client Project #	Matrix	Collection Date/Time	Received
SVMP-5a SA13928-05	0016718	Soil	11-Jun-04 16:30	15-Jun-04

Analyte(s)	*Result*	**RDL/Units*	*Dilution*	*Method Ref.*	*Prepared*	*Analyzed*	*Batch*	*Analyst*	*Flag*
Volatile Organic Compounds									
Volatile Organic Compounds by SW846 8260B		Prepared by method SW846 5035A Soil (low level)							VOC10
4-Methyl-2-pentanone (MIBK)	BRL	42.9 ug/kg dry	1	SW846 8260B	17-Jun-04	17-Jun-04	4061088	tim	
Methylene chloride	BRL	42.9 ug/kg dry	1	"	"	"	"	"	
Naphthalene	BRL	4.3 ug/kg dry	1	"	"	"	"	"	
n-Propylbenzene	BRL	4.3 ug/kg dry	1	"	"	"	"	"	
Styrene	BRL	4.3 ug/kg dry	1	"	"	"	"	"	
1,1,1,2-Tetrachloroethane	BRL	4.3 ug/kg dry	1	"	"	"	"	"	
1,1,2,2-Tetrachloroethane	BRL	4.3 ug/kg dry	1	"	"	"	"	"	
Tetrachloroethene	BRL	4.3 ug/kg dry	1	"	"	"	"	"	
Toluene	BRL	4.3 ug/kg dry	1	"	"	"	"	"	
1,2,3-Trichlorobenzene	BRL	4.3 ug/kg dry	1	"	"	"	"	"	
1,2,4-Trichlorobenzene	BRL	4.3 ug/kg dry	1	"	"	"	"	"	
1,1,1-Trichloroethane	BRL	4.3 ug/kg dry	1	"	"	"	"	"	
1,1,2-Trichloroethane	BRL	4.3 ug/kg dry	1	"	"	"	"	"	
Trichloroethene	BRL	4.3 ug/kg dry	1	"	"	"	"	"	
Trichlorofluoromethane (Freon 11)	BRL	4.3 ug/kg dry	1	"	"	"	"	"	
1,2,3-Trichloropropane	BRL	4.3 ug/kg dry	1	"	"	"	"	"	
1,2,4-Trimethylbenzene	BRL	4.3 ug/kg dry	1	"	"	"	"	"	
1,3,5-Trimethylbenzene	BRL	4.3 ug/kg dry	1	"	"	"	"	"	
Vinyl chloride	BRL	4.3 ug/kg dry	1	"	"	"	"	"	
m,p-Xylene	BRL	8.6 ug/kg dry	1	"	"	"	"	"	
o-Xylene	BRL	4.3 ug/kg dry	1	"	"	"	"	"	
Surrogate: 4-Bromofluorobenzene	*93.6*	*70-130 %*		"	"	"	"	"	
Surrogate: Toluene-d8	*101*	*70-130 %*		"	"	"	"	"	
Surrogate: 1,2-Dichloroethane-d4	*112*	*70-130 %*		"	"	"	"	"	
Surrogate: Dibromofluoromethane	*104*	*70-130 %*		"	"	"	"	"	
General Chemistry Parameters									
% Solids	92.9	%	1	SM2540 G Mod.	16-Jun-04	17-Jun-04	4061002	LN	

Sample Identification	Client Project #	Matrix	Collection Date/Time	Received
SVMP-6a SA13928-06	0016718	Soil	11-Jun-04 17:25	15-Jun-04

Analyte(s)	*Result*	**RDL/Units*	*Dilution*	*Method Ref.*	*Prepared*	*Analyzed*	*Batch*	*Analyst*	*Flag*
Volatile Organic Compounds									
VOC Extraction	Field extracted	N/A	1	VOC	16-Jun-04	16-Jun-04	4061032	LN	
Volatile Organic Compounds by SW846 8260B		Prepared by method SW846 5035A Soil (low level)							
Acetone	213	107 ug/kg dry	1	SW846 8260B	17-Jun-04	17-Jun-04	4061088	tim	VOC6
Acrylonitrile	BRL	5.4 ug/kg dry	1	"	"	"	"	"	
Benzene	BRL	5.4 ug/kg dry	1	"	"	"	"	"	
Bromobenzene	BRL	5.4 ug/kg dry	1	"	"	"	"	"	
Bromochloromethane	BRL	5.4 ug/kg dry	1	"	"	"	"	"	
Bromodichloromethane	BRL	5.4 ug/kg dry	1	"	"	"	"	"	
Bromoform	BRL	5.4 ug/kg dry	1	"	"	"	"	"	
Bromomethane	BRL	10.7 ug/kg dry	1	"	"	"	"	"	
2-Butanone (MEK)	BRL	53.6 ug/kg dry	1	"	"	"	"	"	
n-Butylbenzene	BRL	5.4 ug/kg dry	1	"	"	"	"	"	
sec-Butylbenzene	BRL	5.4 ug/kg dry	1	"	"	"	"	"	
tert-Butylbenzene	BRL	5.4 ug/kg dry	1	"	"	"	"	"	
Carbon disulfide	BRL	26.8 ug/kg dry	1	"	"	"	"	"	
Carbon tetrachloride	BRL	5.4 ug/kg dry	1	"	"	"	"	"	
Chlorobenzene	BRL	5.4 ug/kg dry	1	"	"	"	"	"	
Chloroethane	BRL	10.7 ug/kg dry	1	"	"	"	"	"	
Chloroform	BRL	5.4 ug/kg dry	1	"	"	"	"	"	
Chloromethane	BRL	10.7 ug/kg dry	1	"	"	"	"	"	
2-Chlorotoluene	BRL	5.4 ug/kg dry	1	"	"	"	"	"	
4-Chlorotoluene	BRL	5.4 ug/kg dry	1	"	"	"	"	"	
1,2-Dibromo-3-chloropropane	BRL	10.7 ug/kg dry	1	"	"	"	"	"	
Dibromochloromethane	BRL	5.4 ug/kg dry	1	"	"	"	"	"	
1,2-Dibromoethane (EDB)	BRL	5.4 ug/kg dry	1	"	"	"	"	"	
Dibromomethane	BRL	5.4 ug/kg dry	1	"	"	"	"	"	
1,2-Dichlorobenzene	BRL	5.4 ug/kg dry	1	"	"	"	"	"	
1,3-Dichlorobenzene	BRL	5.4 ug/kg dry	1	"	"	"	"	"	
1,4-Dichlorobenzene	BRL	5.4 ug/kg dry	1	"	"	"	"	"	
Dichlorodifluoromethane (Freon12)	BRL	10.7 ug/kg dry	1	"	"	"	"	"	
1,1-Dichloroethane	BRL	5.4 ug/kg dry	1	"	"	"	"	"	
1,2-Dichloroethane	BRL	5.4 ug/kg dry	1	"	"	"	"	"	
1,1-Dichloroethene	BRL	5.4 ug/kg dry	1	"	"	"	"	"	
cis-1,2-Dichloroethene	BRL	5.4 ug/kg dry	1	"	"	"	"	"	
trans-1,2-Dichloroethene	BRL	5.4 ug/kg dry	1	"	"	"	"	"	
1,2-Dichloropropane	BRL	5.4 ug/kg dry	1	"	"	"	"	"	
1,3-Dichloropropane	BRL	5.4 ug/kg dry	1	"	"	"	"	"	
2,2-Dichloropropane	BRL	5.4 ug/kg dry	1	"	"	"	"	"	
1,1-Dichloropropene	BRL	5.4 ug/kg dry	1	"	"	"	"	"	
cis-1,3-Dichloropropene	BRL	5.4 ug/kg dry	1	"	"	"	"	"	
trans-1,3-Dichloropropene	BRL	5.4 ug/kg dry	1	"	"	"	"	"	
Ethylbenzene	BRL	5.4 ug/kg dry	1	"	"	"	"	"	
Hexachlorobutadiene	BRL	5.4 ug/kg dry	1	"	"	"	"	"	
2-Hexanone (MBK)	BRL	53.6 ug/kg dry	1	"	"	"	"	"	
Isopropylbenzene	BRL	5.4 ug/kg dry	1	"	"	"	"	"	
4-Isopropyltoluene	BRL	5.4 ug/kg dry	1	"	"	"	"	"	
Methyl tert-butyl ether	BRL	5.4 ug/kg dry	1	"	"	"	"	"	

Sample Identification	Client Project #	Matrix	Collection Date/Time	Received
SVMP-6a SA13928-06	0016718	Soil	11-Jun-04 17:25	15-Jun-04

Analyte(s)	*Result*	**RDL/Units*	*Dilution*	*Method Ref.*	*Prepared*	*Analyzed*	*Batch*	*Analyst*	*Flag*
Volatile Organic Compounds									
Volatile Organic Compounds by SW846 8260B		Prepared by method SW846 5035A Soil (low level)							
4-Methyl-2-pentanone (MIBK)	BRL	53.6 ug/kg dry	1	SW846 8260B	17-Jun-04	17-Jun-04	4061088	tim	
Methylene chloride	BRL	53.6 ug/kg dry	1	"	"	"	"	"	
Naphthalene	BRL	5.4 ug/kg dry	1	"	"	"	"	"	
n-Propylbenzene	BRL	5.4 ug/kg dry	1	"	"	"	"	"	
Styrene	BRL	5.4 ug/kg dry	1	"	"	"	"	"	
1,1,1,2-Tetrachloroethane	BRL	5.4 ug/kg dry	1	"	"	"	"	"	
1,1,2,2-Tetrachloroethane	BRL	5.4 ug/kg dry	1	"	"	"	"	"	
Tetrachloroethene	BRL	5.4 ug/kg dry	1	"	"	"	"	"	
Toluene	BRL	5.4 ug/kg dry	1	"	"	"	"	"	
1,2,3-Trichlorobenzene	BRL	5.4 ug/kg dry	1	"	"	"	"	"	
1,2,4-Trichlorobenzene	BRL	5.4 ug/kg dry	1	"	"	"	"	"	
1,1,1-Trichloroethane	BRL	5.4 ug/kg dry	1	"	"	"	"	"	
1,1,2-Trichloroethane	BRL	5.4 ug/kg dry	1	"	"	"	"	"	
Trichloroethene	BRL	5.4 ug/kg dry	1	"	"	"	"	"	
Trichlorofluoromethane (Freon 11)	BRL	5.4 ug/kg dry	1	"	"	"	"	"	
1,2,3-Trichloropropane	BRL	5.4 ug/kg dry	1	"	"	"	"	"	
1,2,4-Trimethylbenzene	BRL	5.4 ug/kg dry	1	"	"	"	"	"	
1,3,5-Trimethylbenzene	BRL	5.4 ug/kg dry	1	"	"	"	"	"	
Vinyl chloride	BRL	5.4 ug/kg dry	1	"	"	"	"	"	
m,p-Xylene	BRL	10.7 ug/kg dry	1	"	"	"	"	"	
o-Xylene	BRL	5.4 ug/kg dry	1	"	"	"	"	"	
Surrogate: 4-Bromofluorobenzene	*93.2*	*70-130 %*		"	"	"	"	"	
Surrogate: Toluene-d8	*101*	*70-130 %*		"	"	"	"	"	
Surrogate: 1,2-Dichloroethane-d4	*113*	*70-130 %*		"	"	"	"	"	
Surrogate: Dibromofluoromethane	*104*	*70-130 %*		"	"	"	"	"	
General Chemistry Parameters									
% Solids	94.4	%	1	SM2540 G Mod.	16-Jun-04	17-Jun-04	4061002	LN	

Sample Identification	Client Project #	Matrix	Collection Date/Time	Received
SVMP-4a SA13928-07	0016718	Soil	12-Jun-04 09:10	15-Jun-04

Analyte(s)	*Result*	**RDL/Units*	*Dilution*	*Method Ref.*	*Prepared*	*Analyzed*	*Batch*	*Analyst*	*Flag*
Volatile Organic Compounds									
VOC Extraction	Field extracted	N/A	1	VOC	16-Jun-04	16-Jun-04	4061032	LN	
Volatile Organic Compounds by SW846 8260B		Prepared by method SW846 5035A Soil (low level)							
Acetone	212	138 ug/kg dry	1	SW846 8260B	17-Jun-04	18-Jun-04	4061069	tim	VOC6
Acrylonitrile	BRL	6.9 ug/kg dry	1	"	"	"	"	"	
Benzene	BRL	6.9 ug/kg dry	1	"	"	"	"	"	
Bromobenzene	BRL	6.9 ug/kg dry	1	"	"	"	"	"	
Bromochloromethane	BRL	6.9 ug/kg dry	1	"	"	"	"	"	
Bromodichloromethane	BRL	6.9 ug/kg dry	1	"	"	"	"	"	
Bromoform	BRL	6.9 ug/kg dry	1	"	"	"	"	"	
Bromomethane	BRL	13.8 ug/kg dry	1	"	"	"	"	"	
2-Butanone (MEK)	BRL	68.9 ug/kg dry	1	"	"	"	"	"	
n-Butylbenzene	BRL	6.9 ug/kg dry	1	"	"	"	"	"	
sec-Butylbenzene	BRL	6.9 ug/kg dry	1	"	"	"	"	"	
tert-Butylbenzene	BRL	6.9 ug/kg dry	1	"	"	"	"	"	
Carbon disulfide	BRL	34.5 ug/kg dry	1	"	"	"	"	"	
Carbon tetrachloride	BRL	6.9 ug/kg dry	1	"	"	"	"	"	
Chlorobenzene	BRL	6.9 ug/kg dry	1	"	"	"	"	"	
Chloroethane	BRL	13.8 ug/kg dry	1	"	"	"	"	"	
Chloroform	BRL	6.9 ug/kg dry	1	"	"	"	"	"	
Chloromethane	BRL	13.8 ug/kg dry	1	"	"	"	"	"	
2-Chlorotoluene	BRL	6.9 ug/kg dry	1	"	"	"	"	"	
4-Chlorotoluene	BRL	6.9 ug/kg dry	1	"	"	"	"	"	
1,2-Dibromo-3-chloropropane	BRL	13.8 ug/kg dry	1	"	"	"	"	"	
Dibromochloromethane	BRL	6.9 ug/kg dry	1	"	"	"	"	"	
1,2-Dibromoethane (EDB)	BRL	6.9 ug/kg dry	1	"	"	"	"	"	
Dibromomethane	BRL	6.9 ug/kg dry	1	"	"	"	"	"	
1,2-Dichlorobenzene	BRL	6.9 ug/kg dry	1	"	"	"	"	"	
1,3-Dichlorobenzene	BRL	6.9 ug/kg dry	1	"	"	"	"	"	
1,4-Dichlorobenzene	BRL	6.9 ug/kg dry	1	"	"	"	"	"	
Dichlorodifluoromethane (Freon12)	BRL	13.8 ug/kg dry	1	"	"	"	"	"	
1,1-Dichloroethane	BRL	6.9 ug/kg dry	1	"	"	"	"	"	
1,2-Dichloroethane	BRL	6.9 ug/kg dry	1	"	"	"	"	"	
1,1-Dichloroethene	BRL	6.9 ug/kg dry	1	"	"	"	"	"	
cis-1,2-Dichloroethene	BRL	6.9 ug/kg dry	1	"	"	"	"	"	
trans-1,2-Dichloroethene	BRL	6.9 ug/kg dry	1	"	"	"	"	"	
1,2-Dichloropropane	BRL	6.9 ug/kg dry	1	"	"	"	"	"	
1,3-Dichloropropane	BRL	6.9 ug/kg dry	1	"	"	"	"	"	
2,2-Dichloropropane	BRL	6.9 ug/kg dry	1	"	"	"	"	"	
1,1-Dichloropropene	BRL	6.9 ug/kg dry	1	"	"	"	"	"	
cis-1,3-Dichloropropene	BRL	6.9 ug/kg dry	1	"	"	"	"	"	
trans-1,3-Dichloropropene	BRL	6.9 ug/kg dry	1	"	"	"	"	"	
Ethylbenzene	BRL	6.9 ug/kg dry	1	"	"	"	"	"	
Hexachlorobutadiene	BRL	6.9 ug/kg dry	1	"	"	"	"	"	
2-Hexanone (MBK)	BRL	68.9 ug/kg dry	1	"	"	"	"	"	
Isopropylbenzene	BRL	6.9 ug/kg dry	1	"	"	"	"	"	
4-Isopropyltoluene	BRL	6.9 ug/kg dry	1	"	"	"	"	"	
Methyl tert-butyl ether	BRL	6.9 ug/kg dry	1	"	"	"	"	"	

Sample Identification	Client Project #	Matrix	Collection Date/Time	Received
SVMP-4a SA13928-07	0016718	Soil	12-Jun-04 09:10	15-Jun-04

Analyte(s)	*Result*	**RDL/Units*	*Dilution*	*Method Ref.*	*Prepared*	*Analyzed*	*Batch*	*Analyst*	*Flag*
Volatile Organic Compounds									
Volatile Organic Compounds by SW846 8260B		Prepared by method SW846 5035A Soil (low level)							
4-Methyl-2-pentanone (MIBK)	BRL	68.9 ug/kg dry	1	SW846 8260B	17-Jun-04	18-Jun-04	4061069	tim	
Methylene chloride	BRL	68.9 ug/kg dry	1	"	"	"	"	"	
Naphthalene	BRL	6.9 ug/kg dry	1	"	"	"	"	"	
n-Propylbenzene	BRL	6.9 ug/kg dry	1	"	"	"	"	"	
Styrene	BRL	6.9 ug/kg dry	1	"	"	"	"	"	
1,1,1,2-Tetrachloroethane	BRL	6.9 ug/kg dry	1	"	"	"	"	"	
1,1,2,2-Tetrachloroethane	BRL	6.9 ug/kg dry	1	"	"	"	"	"	
Tetrachloroethene	BRL	6.9 ug/kg dry	1	"	"	"	"	"	
Toluene	BRL	6.9 ug/kg dry	1	"	"	"	"	"	
1,2,3-Trichlorobenzene	BRL	6.9 ug/kg dry	1	"	"	"	"	"	
1,2,4-Trichlorobenzene	BRL	6.9 ug/kg dry	1	"	"	"	"	"	
1,1,1-Trichloroethane	BRL	6.9 ug/kg dry	1	"	"	"	"	"	
1,1,2-Trichloroethane	BRL	6.9 ug/kg dry	1	"	"	"	"	"	
Trichloroethene	BRL	6.9 ug/kg dry	1	"	"	"	"	"	
Trichlorofluoromethane (Freon 11)	BRL	6.9 ug/kg dry	1	"	"	"	"	"	
1,2,3-Trichloropropane	BRL	6.9 ug/kg dry	1	"	"	"	"	"	
1,2,4-Trimethylbenzene	BRL	6.9 ug/kg dry	1	"	"	"	"	"	
1,3,5-Trimethylbenzene	BRL	6.9 ug/kg dry	1	"	"	"	"	"	
Vinyl chloride	BRL	6.9 ug/kg dry	1	"	"	"	"	"	
m,p-Xylene	BRL	13.8 ug/kg dry	1	"	"	"	"	"	
o-Xylene	BRL	6.9 ug/kg dry	1	"	"	"	"	"	
Surrogate: 4-Bromofluorobenzene	*94.0*	*70-130 %*		"	"	"	"	"	
Surrogate: Toluene-d8	*102*	*70-130 %*		"	"	"	"	"	
Surrogate: 1,2-Dichloroethane-d4	*111*	*70-130 %*		"	"	"	"	"	
Surrogate: Dibromofluoromethane	*104*	*70-130 %*		"	"	"	"	"	
General Chemistry Parameters									
% Solids	76.8	%	1	SM2540 G Mod.	16-Jun-04	17-Jun-04	4061002	LN	

Sample Identification	Client Project #	Matrix	Collection Date/Time	Received
SVMP-3a	0016718	Soil	12-Jun-04 10:00	15-Jun-04
SA13928-08				

Analyte(s)	*Result*	**RDL/Units*	*Dilution*	*Method Ref.*	*Prepared*	*Analyzed*	*Batch*	*Analyst*	*Flag*
Volatile Organic Compounds									
VOC Extraction	Field extracted	N/A	1	VOC	16-Jun-04	16-Jun-04	4061032	LN	
Volatile Organic Compounds by SW846 8260B		Prepared by method SW846 5035A Soil (low level)							
Acetone	152	139 ug/kg dry	1	SW846 8260B	17-Jun-04	18-Jun-04	4061069	tim	VOC6
Acrylonitrile	BRL	7.0 ug/kg dry	1	"	"	"	"	"	
Benzene	BRL	7.0 ug/kg dry	1	"	"	"	"	"	
Bromobenzene	BRL	7.0 ug/kg dry	1	"	"	"	"	"	
Bromochloromethane	BRL	7.0 ug/kg dry	1	"	"	"	"	"	
Bromodichloromethane	BRL	7.0 ug/kg dry	1	"	"	"	"	"	
Bromoform	BRL	7.0 ug/kg dry	1	"	"	"	"	"	
Bromomethane	BRL	13.9 ug/kg dry	1	"	"	"	"	"	
2-Butanone (MEK)	BRL	69.6 ug/kg dry	1	"	"	"	"	"	
n-Butylbenzene	BRL	7.0 ug/kg dry	1	"	"	"	"	"	
sec-Butylbenzene	BRL	7.0 ug/kg dry	1	"	"	"	"	"	
tert-Butylbenzene	BRL	7.0 ug/kg dry	1	"	"	"	"	"	
Carbon disulfide	BRL	34.8 ug/kg dry	1	"	"	"	"	"	
Carbon tetrachloride	BRL	7.0 ug/kg dry	1	"	"	"	"	"	
Chlorobenzene	BRL	7.0 ug/kg dry	1	"	"	"	"	"	
Chloroethane	BRL	13.9 ug/kg dry	1	"	"	"	"	"	
Chloroform	BRL	7.0 ug/kg dry	1	"	"	"	"	"	
Chloromethane	BRL	13.9 ug/kg dry	1	"	"	"	"	"	
2-Chlorotoluene	BRL	7.0 ug/kg dry	1	"	"	"	"	"	
4-Chlorotoluene	BRL	7.0 ug/kg dry	1	"	"	"	"	"	
1,2-Dibromo-3-chloropropane	BRL	13.9 ug/kg dry	1	"	"	"	"	"	
Dibromochloromethane	BRL	7.0 ug/kg dry	1	"	"	"	"	"	
1,2-Dibromoethane (EDB)	BRL	7.0 ug/kg dry	1	"	"	"	"	"	
Dibromomethane	BRL	7.0 ug/kg dry	1	"	"	"	"	"	
1,2-Dichlorobenzene	BRL	7.0 ug/kg dry	1	"	"	"	"	"	
1,3-Dichlorobenzene	BRL	7.0 ug/kg dry	1	"	"	"	"	"	
1,4-Dichlorobenzene	BRL	7.0 ug/kg dry	1	"	"	"	"	"	
Dichlorodifluoromethane (Freon12)	BRL	13.9 ug/kg dry	1	"	"	"	"	"	
1,1-Dichloroethane	BRL	7.0 ug/kg dry	1	"	"	"	"	"	
1,2-Dichloroethane	BRL	7.0 ug/kg dry	1	"	"	"	"	"	
1,1-Dichloroethene	BRL	7.0 ug/kg dry	1	"	"	"	"	"	
cis-1,2-Dichloroethene	BRL	7.0 ug/kg dry	1	"	"	"	"	"	
trans-1,2-Dichloroethene	BRL	7.0 ug/kg dry	1	"	"	"	"	"	
1,2-Dichloropropane	BRL	7.0 ug/kg dry	1	"	"	"	"	"	
1,3-Dichloropropane	BRL	7.0 ug/kg dry	1	"	"	"	"	"	
2,2-Dichloropropane	BRL	7.0 ug/kg dry	1	"	"	"	"	"	
1,1-Dichloropropene	BRL	7.0 ug/kg dry	1	"	"	"	"	"	
cis-1,3-Dichloropropene	BRL	7.0 ug/kg dry	1	"	"	"	"	"	
trans-1,3-Dichloropropene	BRL	7.0 ug/kg dry	1	"	"	"	"	"	
Ethylbenzene	BRL	7.0 ug/kg dry	1	"	"	"	"	"	
Hexachlorobutadiene	BRL	7.0 ug/kg dry	1	"	"	"	"	"	
2-Hexanone (MBK)	BRL	69.6 ug/kg dry	1	"	"	"	"	"	
Isopropylbenzene	BRL	7.0 ug/kg dry	1	"	"	"	"	"	
4-Isopropyltoluene	BRL	7.0 ug/kg dry	1	"	"	"	"	"	
Methyl tert-butyl ether	BRL	7.0 ug/kg dry	1	"	"	"	"	"	

Sample Identification	Client Project #	Matrix	Collection Date/Time	Received
SVMP-3a SA13928-08	0016718	Soil	12-Jun-04 10:00	15-Jun-04

Analyte(s)	*Result*	**RDL/Units*	*Dilution*	*Method Ref.*	*Prepared*	*Analyzed*	*Batch*	*Analyst*	*Flag*
Volatile Organic Compounds									
Volatile Organic Compounds by SW846 8260B		Prepared by method SW846 5035A Soil (low level)							
4-Methyl-2-pentanone (MIBK)	BRL	69.6 ug/kg dry	1	SW846 8260B	17-Jun-04	18-Jun-04	4061069	tim	
Methylene chloride	BRL	69.6 ug/kg dry	1	"	"	"	"	"	
Naphthalene	BRL	7.0 ug/kg dry	1	"	"	"	"	"	
n-Propylbenzene	BRL	7.0 ug/kg dry	1	"	"	"	"	"	
Styrene	BRL	7.0 ug/kg dry	1	"	"	"	"	"	
1,1,1,2-Tetrachloroethane	BRL	7.0 ug/kg dry	1	"	"	"	"	"	
1,1,2,2-Tetrachloroethane	BRL	7.0 ug/kg dry	1	"	"	"	"	"	
Tetrachloroethene	BRL	7.0 ug/kg dry	1	"	"	"	"	"	
Toluene	BRL	7.0 ug/kg dry	1	"	"	"	"	"	
1,2,3-Trichlorobenzene	BRL	7.0 ug/kg dry	1	"	"	"	"	"	
1,2,4-Trichlorobenzene	BRL	7.0 ug/kg dry	1	"	"	"	"	"	
1,1,1-Trichloroethane	11.8	7.0 ug/kg dry	1	"	"	"	"	"	
1,1,2-Trichloroethane	BRL	7.0 ug/kg dry	1	"	"	"	"	"	
Trichloroethene	BRL	7.0 ug/kg dry	1	"	"	"	"	"	
Trichlorofluoromethane (Freon 11)	BRL	7.0 ug/kg dry	1	"	"	"	"	"	
1,2,3-Trichloropropane	BRL	7.0 ug/kg dry	1	"	"	"	"	"	
1,2,4-Trimethylbenzene	BRL	7.0 ug/kg dry	1	"	"	"	"	"	
1,3,5-Trimethylbenzene	BRL	7.0 ug/kg dry	1	"	"	"	"	"	
Vinyl chloride	BRL	7.0 ug/kg dry	1	"	"	"	"	"	
m,p-Xylene	BRL	13.9 ug/kg dry	1	"	"	"	"	"	
o-Xylene	BRL	7.0 ug/kg dry	1	"	"	"	"	"	
Surrogate: 4-Bromofluorobenzene	*94.8*	*70-130 %*		"	"	"	"	"	
Surrogate: Toluene-d8	*102*	*70-130 %*		"	"	"	"	"	
Surrogate: 1,2-Dichloroethane-d4	*114*	*70-130 %*		"	"	"	"	"	
Surrogate: Dibromofluoromethane	*105*	*70-130 %*		"	"	"	"	"	
General Chemistry Parameters									
% Solids	77.3	%	1	SM2540 G Mod.	16-Jun-04	17-Jun-04	4061002	LN	

Sample Identification	Client Project #	Matrix	Collection Date/Time	Received
ASMP-2a SA13928-09	0016718	Soil	12-Jun-04 10:50	15-Jun-04

Analyte(s)	*Result*	**RDL/Units*	*Dilution*	*Method Ref.*	*Prepared*	*Analyzed*	*Batch*	*Analyst*	*Flag*
Volatile Organic Compounds									
VOC Extraction	Field extracted	N/A	1	VOC	16-Jun-04	16-Jun-04	4061032	LN	
Volatile Organic Compounds by SW846 8260B		Prepared by method SW846 5035A Soil (low level)							**VOC10**
Acetone	191	86.5 ug/kg dry	1	SW846 8260B	17-Jun-04	18-Jun-04	4061069	tim	**VOC6**
Acrylonitrile	BRL	4.3 ug/kg dry	1	"	"	"	"	"	
Benzene	BRL	4.3 ug/kg dry	1	"	"	"	"	"	
Bromobenzene	BRL	4.3 ug/kg dry	1	"	"	"	"	"	
Bromochloromethane	BRL	4.3 ug/kg dry	1	"	"	"	"	"	
Bromodichloromethane	BRL	4.3 ug/kg dry	1	"	"	"	"	"	
Bromoform	BRL	4.3 ug/kg dry	1	"	"	"	"	"	
Bromomethane	BRL	8.6 ug/kg dry	1	"	"	"	"	"	
2-Butanone (MEK)	BRL	43.2 ug/kg dry	1	"	"	"	"	"	
n-Butylbenzene	BRL	4.3 ug/kg dry	1	"	"	"	"	"	
sec-Butylbenzene	BRL	4.3 ug/kg dry	1	"	"	"	"	"	
tert-Butylbenzene	BRL	4.3 ug/kg dry	1	"	"	"	"	"	
Carbon disulfide	BRL	21.6 ug/kg dry	1	"	"	"	"	"	
Carbon tetrachloride	BRL	4.3 ug/kg dry	1	"	"	"	"	"	
Chlorobenzene	BRL	4.3 ug/kg dry	1	"	"	"	"	"	
Chloroethane	BRL	8.6 ug/kg dry	1	"	"	"	"	"	
Chloroform	BRL	4.3 ug/kg dry	1	"	"	"	"	"	
Chloromethane	BRL	8.6 ug/kg dry	1	"	"	"	"	"	
2-Chlorotoluene	BRL	4.3 ug/kg dry	1	"	"	"	"	"	
4-Chlorotoluene	BRL	4.3 ug/kg dry	1	"	"	"	"	"	
1,2-Dibromo-3-chloropropane	BRL	8.6 ug/kg dry	1	"	"	"	"	"	
Dibromochloromethane	BRL	4.3 ug/kg dry	1	"	"	"	"	"	
1,2-Dibromoethane (EDB)	BRL	4.3 ug/kg dry	1	"	"	"	"	"	
Dibromomethane	BRL	4.3 ug/kg dry	1	"	"	"	"	"	
1,2-Dichlorobenzene	BRL	4.3 ug/kg dry	1	"	"	"	"	"	
1,3-Dichlorobenzene	BRL	4.3 ug/kg dry	1	"	"	"	"	"	
1,4-Dichlorobenzene	BRL	4.3 ug/kg dry	1	"	"	"	"	"	
Dichlorodifluoromethane (Freon12)	BRL	8.6 ug/kg dry	1	"	"	"	"	"	
1,1-Dichloroethane	BRL	4.3 ug/kg dry	1	"	"	"	"	"	
1,2-Dichloroethane	BRL	4.3 ug/kg dry	1	"	"	"	"	"	
1,1-Dichloroethene	BRL	4.3 ug/kg dry	1	"	"	"	"	"	
cis-1,2-Dichloroethene	BRL	4.3 ug/kg dry	1	"	"	"	"	"	
trans-1,2-Dichloroethene	BRL	4.3 ug/kg dry	1	"	"	"	"	"	
1,2-Dichloropropane	BRL	4.3 ug/kg dry	1	"	"	"	"	"	
1,3-Dichloropropane	BRL	4.3 ug/kg dry	1	"	"	"	"	"	
2,2-Dichloropropane	BRL	4.3 ug/kg dry	1	"	"	"	"	"	
1,1-Dichloropropene	BRL	4.3 ug/kg dry	1	"	"	"	"	"	
cis-1,3-Dichloropropene	BRL	4.3 ug/kg dry	1	"	"	"	"	"	
trans-1,3-Dichloropropene	BRL	4.3 ug/kg dry	1	"	"	"	"	"	
Ethylbenzene	BRL	4.3 ug/kg dry	1	"	"	"	"	"	
Hexachlorobutadiene	BRL	4.3 ug/kg dry	1	"	"	"	"	"	
2-Hexanone (MBK)	BRL	43.2 ug/kg dry	1	"	"	"	"	"	
Isopropylbenzene	BRL	4.3 ug/kg dry	1	"	"	"	"	"	
4-Isopropyltoluene	BRL	4.3 ug/kg dry	1	"	"	"	"	"	
Methyl tert-butyl ether	BRL	4.3 ug/kg dry	1	"	"	"	"	"	

Sample Identification	Client Project #	Matrix	Collection Date/Time	Received
ASMP-2a SA13928-09	0016718	Soil	12-Jun-04 10:50	15-Jun-04

Analyte(s)	*Result*	**RDL/Units*	*Dilution*	*Method Ref.*	*Prepared*	*Analyzed*	*Batch*	*Analyst*	*Flag*
Volatile Organic Compounds									
Volatile Organic Compounds by SW846 8260B		Prepared by method SW846 5035A Soil (low level)							VOC10
4-Methyl-2-pentanone (MIBK)	BRL	43.2 ug/kg dry	1	SW846 8260B	17-Jun-04	18-Jun-04	4061069	tim	
Methylene chloride	BRL	43.2 ug/kg dry	1	"	"	"	"	"	
Naphthalene	BRL	4.3 ug/kg dry	1	"	"	"	"	"	
n-Propylbenzene	BRL	4.3 ug/kg dry	1	"	"	"	"	"	
Styrene	BRL	4.3 ug/kg dry	1	"	"	"	"	"	
1,1,1,2-Tetrachloroethane	BRL	4.3 ug/kg dry	1	"	"	"	"	"	
1,1,2,2-Tetrachloroethane	BRL	4.3 ug/kg dry	1	"	"	"	"	"	
Tetrachloroethene	BRL	4.3 ug/kg dry	1	"	"	"	"	"	
Toluene	BRL	4.3 ug/kg dry	1	"	"	"	"	"	
1,2,3-Trichlorobenzene	BRL	4.3 ug/kg dry	1	"	"	"	"	"	
1,2,4-Trichlorobenzene	BRL	4.3 ug/kg dry	1	"	"	"	"	"	
1,1,1-Trichloroethane	BRL	4.3 ug/kg dry	1	"	"	"	"	"	
1,1,2-Trichloroethane	BRL	4.3 ug/kg dry	1	"	"	"	"	"	
Trichloroethene	BRL	4.3 ug/kg dry	1	"	"	"	"	"	
Trichlorofluoromethane (Freon 11)	BRL	4.3 ug/kg dry	1	"	"	"	"	"	
1,2,3-Trichloropropane	BRL	4.3 ug/kg dry	1	"	"	"	"	"	
1,2,4-Trimethylbenzene	BRL	4.3 ug/kg dry	1	"	"	"	"	"	
1,3,5-Trimethylbenzene	BRL	4.3 ug/kg dry	1	"	"	"	"	"	
Vinyl chloride	BRL	4.3 ug/kg dry	1	"	"	"	"	"	
m,p-Xylene	BRL	8.6 ug/kg dry	1	"	"	"	"	"	
o-Xylene	BRL	4.3 ug/kg dry	1	"	"	"	"	"	
Surrogate: 4-Bromofluorobenzene	*94.6*	*70-130 %*		"	"	"	"	"	
Surrogate: Toluene-d8	*101*	*70-130 %*		"	"	"	"	"	
Surrogate: 1,2-Dichloroethane-d4	*114*	*70-130 %*		"	"	"	"	"	
Surrogate: Dibromofluoromethane	*103*	*70-130 %*		"	"	"	"	"	
General Chemistry Parameters									
% Solids	83.0	%	1	SM2540 G Mod.	16-Jun-04	17-Jun-04	4061002	LN	

Sample Identification	Client Project #	Matrix	Collection Date/Time	Received
ASW-1a SA13928-10	0016718	Soil	12-Jun-04 14:00	15-Jun-04

Analyte(s)	*Result*	**RDL/Units*	*Dilution*	*Method Ref.*	*Prepared*	*Analyzed*	*Batch*	*Analyst*	*Flag*
Volatile Organic Compounds									
VOC Extraction	Field extracted	N/A	1	VOC	16-Jun-04	16-Jun-04	4061032	LN	
Volatile Organic Compounds by SW846 8260B		Prepared by method SW846 5035A Soil (low level)							VOC10
Acetone	BRL	95.3 ug/kg dry	1	SW846 8260B	17-Jun-04	18-Jun-04	4061069	tim	
Acrylonitrile	BRL	4.8 ug/kg dry	1	"	"	"	"	"	
Benzene	BRL	4.8 ug/kg dry	1	"	"	"	"	"	
Bromobenzene	BRL	4.8 ug/kg dry	1	"	"	"	"	"	
Bromochloromethane	BRL	4.8 ug/kg dry	1	"	"	"	"	"	
Bromodichloromethane	BRL	4.8 ug/kg dry	1	"	"	"	"	"	
Bromoform	BRL	4.8 ug/kg dry	1	"	"	"	"	"	
Bromomethane	BRL	9.5 ug/kg dry	1	"	"	"	"	"	
2-Butanone (MEK)	BRL	47.6 ug/kg dry	1	"	"	"	"	"	
n-Butylbenzene	BRL	4.8 ug/kg dry	1	"	"	"	"	"	
sec-Butylbenzene	BRL	4.8 ug/kg dry	1	"	"	"	"	"	
tert-Butylbenzene	BRL	4.8 ug/kg dry	1	"	"	"	"	"	
Carbon disulfide	BRL	23.8 ug/kg dry	1	"	"	"	"	"	
Carbon tetrachloride	BRL	4.8 ug/kg dry	1	"	"	"	"	"	
Chlorobenzene	BRL	4.8 ug/kg dry	1	"	"	"	"	"	
Chloroethane	BRL	9.5 ug/kg dry	1	"	"	"	"	"	
Chloroform	BRL	4.8 ug/kg dry	1	"	"	"	"	"	
Chloromethane	BRL	9.5 ug/kg dry	1	"	"	"	"	"	
2-Chlorotoluene	BRL	4.8 ug/kg dry	1	"	"	"	"	"	
4-Chlorotoluene	BRL	4.8 ug/kg dry	1	"	"	"	"	"	
1,2-Dibromo-3-chloropropane	BRL	9.5 ug/kg dry	1	"	"	"	"	"	
Dibromochloromethane	BRL	4.8 ug/kg dry	1	"	"	"	"	"	
1,2-Dibromoethane (EDB)	BRL	4.8 ug/kg dry	1	"	"	"	"	"	
Dibromomethane	BRL	4.8 ug/kg dry	1	"	"	"	"	"	
1,2-Dichlorobenzene	BRL	4.8 ug/kg dry	1	"	"	"	"	"	
1,3-Dichlorobenzene	BRL	4.8 ug/kg dry	1	"	"	"	"	"	
1,4-Dichlorobenzene	BRL	4.8 ug/kg dry	1	"	"	"	"	"	
Dichlorodifluoromethane (Freon12)	BRL	9.5 ug/kg dry	1	"	"	"	"	"	
1,1-Dichloroethane	BRL	4.8 ug/kg dry	1	"	"	"	"	"	
1,2-Dichloroethane	BRL	4.8 ug/kg dry	1	"	"	"	"	"	
1,1-Dichloroethene	BRL	4.8 ug/kg dry	1	"	"	"	"	"	
cis-1,2-Dichloroethene	BRL	4.8 ug/kg dry	1	"	"	"	"	"	
trans-1,2-Dichloroethene	BRL	4.8 ug/kg dry	1	"	"	"	"	"	
1,2-Dichloropropane	BRL	4.8 ug/kg dry	1	"	"	"	"	"	
1,3-Dichloropropane	BRL	4.8 ug/kg dry	1	"	"	"	"	"	
2,2-Dichloropropane	BRL	4.8 ug/kg dry	1	"	"	"	"	"	
1,1-Dichloropropene	BRL	4.8 ug/kg dry	1	"	"	"	"	"	
cis-1,3-Dichloropropene	BRL	4.8 ug/kg dry	1	"	"	"	"	"	
trans-1,3-Dichloropropene	BRL	4.8 ug/kg dry	1	"	"	"	"	"	
Ethylbenzene	BRL	4.8 ug/kg dry	1	"	"	"	"	"	
Hexachlorobutadiene	BRL	4.8 ug/kg dry	1	"	"	"	"	"	
2-Hexanone (MBK)	BRL	47.6 ug/kg dry	1	"	"	"	"	"	
Isopropylbenzene	BRL	4.8 ug/kg dry	1	"	"	"	"	"	
4-Isopropyltoluene	BRL	4.8 ug/kg dry	1	"	"	"	"	"	
Methyl tert-butyl ether	BRL	4.8 ug/kg dry	1	"	"	"	"	"	

Sample Identification	Client Project #	Matrix	Collection Date/Time	Received
ASW-1a SA13928-10	0016718	Soil	12-Jun-04 14:00	15-Jun-04

Analyte(s)	*Result*	**RDL/Units*	*Dilution*	*Method Ref.*	*Prepared*	*Analyzed*	*Batch*	*Analyst*	*Flag*
Volatile Organic Compounds									
Volatile Organic Compounds by SW846 8260B		Prepared by method SW846 5035A Soil (low level)							VOC10
4-Methyl-2-pentanone (MIBK)	BRL	47.6 ug/kg dry	1	SW846 8260B	17-Jun-04	18-Jun-04	4061069	tim	
Methylene chloride	BRL	47.6 ug/kg dry	1	"	"	"	"	"	
Naphthalene	BRL	4.8 ug/kg dry	1	"	"	"	"	"	
n-Propylbenzene	BRL	4.8 ug/kg dry	1	"	"	"	"	"	
Styrene	BRL	4.8 ug/kg dry	1	"	"	"	"	"	
1,1,1,2-Tetrachloroethane	BRL	4.8 ug/kg dry	1	"	"	"	"	"	
1,1,2,2-Tetrachloroethane	BRL	4.8 ug/kg dry	1	"	"	"	"	"	
Tetrachloroethene	BRL	4.8 ug/kg dry	1	"	"	"	"	"	
Toluene	BRL	4.8 ug/kg dry	1	"	"	"	"	"	
1,2,3-Trichlorobenzene	BRL	4.8 ug/kg dry	1	"	"	"	"	"	
1,2,4-Trichlorobenzene	BRL	4.8 ug/kg dry	1	"	"	"	"	"	
1,1,1-Trichloroethane	BRL	4.8 ug/kg dry	1	"	"	"	"	"	
1,1,2-Trichloroethane	BRL	4.8 ug/kg dry	1	"	"	"	"	"	
Trichloroethene	BRL	4.8 ug/kg dry	1	"	"	"	"	"	
Trichlorofluoromethane (Freon 11)	BRL	4.8 ug/kg dry	1	"	"	"	"	"	
1,2,3-Trichloropropane	BRL	4.8 ug/kg dry	1	"	"	"	"	"	
1,2,4-Trimethylbenzene	BRL	4.8 ug/kg dry	1	"	"	"	"	"	
1,3,5-Trimethylbenzene	BRL	4.8 ug/kg dry	1	"	"	"	"	"	
Vinyl chloride	BRL	4.8 ug/kg dry	1	"	"	"	"	"	
m,p-Xylene	BRL	9.5 ug/kg dry	1	"	"	"	"	"	
o-Xylene	BRL	4.8 ug/kg dry	1	"	"	"	"	"	
Surrogate: 4-Bromofluorobenzene	*94.4*	*70-130 %*		"	"	"	"	"	
Surrogate: Toluene-d8	*102*	*70-130 %*		"	"	"	"	"	
Surrogate: 1,2-Dichloroethane-d4	*115*	*70-130 %*		"	"	"	"	"	
Surrogate: Dibromofluoromethane	*107*	*70-130 %*		"	"	"	"	"	
General Chemistry Parameters									
% Solids	83.7	%	1	SM2540 G Mod.	16-Jun-04	17-Jun-04	4061002	LN	

Sample Identification	Client Project #	Matrix	Collection Date/Time	Received
Char Drum SA13928-11	0016718	Soil	14-Jun-04 10:20	15-Jun-04

Analyte(s)	*Result*	**RDL/Units*	*Dilution*	*Method Ref.*	*Prepared*	*Analyzed*	*Batch*	*Analyst*	*Flag*
Volatile Organic Compounds									
VOC Extraction	Field extracted	N/A	1	VOC	16-Jun-04	16-Jun-04	4061032	LN	
Volatile Organic Compounds by SW846 8260B		Prepared by method SW846 5035A Soil (low level)							VOC10
Acetone	110	71.7 ug/kg dry	1	SW846 8260B	17-Jun-04	18-Jun-04	4061069	tim	VOC6
Acrylonitrile	BRL	3.6 ug/kg dry	1	"	"	"	"	"	
Benzene	BRL	3.6 ug/kg dry	1	"	"	"	"	"	
Bromobenzene	BRL	3.6 ug/kg dry	1	"	"	"	"	"	
Bromochloromethane	BRL	3.6 ug/kg dry	1	"	"	"	"	"	
Bromodichloromethane	BRL	3.6 ug/kg dry	1	"	"	"	"	"	
Bromoform	BRL	3.6 ug/kg dry	1	"	"	"	"	"	
Bromomethane	BRL	7.2 ug/kg dry	1	"	"	"	"	"	
2-Butanone (MEK)	75.2	35.9 ug/kg dry	1	"	"	"	"	"	VOC6
n-Butylbenzene	BRL	3.6 ug/kg dry	1	"	"	"	"	"	
sec-Butylbenzene	BRL	3.6 ug/kg dry	1	"	"	"	"	"	
tert-Butylbenzene	BRL	3.6 ug/kg dry	1	"	"	"	"	"	
Carbon disulfide	BRL	17.9 ug/kg dry	1	"	"	"	"	"	
Carbon tetrachloride	BRL	3.6 ug/kg dry	1	"	"	"	"	"	
Chlorobenzene	BRL	3.6 ug/kg dry	1	"	"	"	"	"	
Chloroethane	BRL	7.2 ug/kg dry	1	"	"	"	"	"	
Chloroform	BRL	3.6 ug/kg dry	1	"	"	"	"	"	
Chloromethane	BRL	7.2 ug/kg dry	1	"	"	"	"	"	
2-Chlorotoluene	BRL	3.6 ug/kg dry	1	"	"	"	"	"	
4-Chlorotoluene	BRL	3.6 ug/kg dry	1	"	"	"	"	"	
1,2-Dibromo-3-chloropropane	BRL	7.2 ug/kg dry	1	"	"	"	"	"	
Dibromochloromethane	BRL	3.6 ug/kg dry	1	"	"	"	"	"	
1,2-Dibromoethane (EDB)	BRL	3.6 ug/kg dry	1	"	"	"	"	"	
Dibromomethane	BRL	3.6 ug/kg dry	1	"	"	"	"	"	
1,2-Dichlorobenzene	BRL	3.6 ug/kg dry	1	"	"	"	"	"	
1,3-Dichlorobenzene	BRL	3.6 ug/kg dry	1	"	"	"	"	"	
1,4-Dichlorobenzene	BRL	3.6 ug/kg dry	1	"	"	"	"	"	
Dichlorodifluoromethane (Freon12)	BRL	7.2 ug/kg dry	1	"	"	"	"	"	
1,1-Dichloroethane	BRL	3.6 ug/kg dry	1	"	"	"	"	"	
1,2-Dichloroethane	BRL	3.6 ug/kg dry	1	"	"	"	"	"	
1,1-Dichloroethene	BRL	3.6 ug/kg dry	1	"	"	"	"	"	
cis-1,2-Dichloroethene	BRL	3.6 ug/kg dry	1	"	"	"	"	"	
trans-1,2-Dichloroethene	BRL	3.6 ug/kg dry	1	"	"	"	"	"	
1,2-Dichloropropane	BRL	3.6 ug/kg dry	1	"	"	"	"	"	
1,3-Dichloropropane	BRL	3.6 ug/kg dry	1	"	"	"	"	"	
2,2-Dichloropropane	BRL	3.6 ug/kg dry	1	"	"	"	"	"	
1,1-Dichloropropene	BRL	3.6 ug/kg dry	1	"	"	"	"	"	
cis-1,3-Dichloropropene	BRL	3.6 ug/kg dry	1	"	"	"	"	"	
trans-1,3-Dichloropropene	BRL	3.6 ug/kg dry	1	"	"	"	"	"	
Ethylbenzene	BRL	3.6 ug/kg dry	1	"	"	"	"	"	
Hexachlorobutadiene	BRL	3.6 ug/kg dry	1	"	"	"	"	"	
2-Hexanone (MBK)	BRL	35.9 ug/kg dry	1	"	"	"	"	"	
Isopropylbenzene	BRL	3.6 ug/kg dry	1	"	"	"	"	"	
4-Isopropyltoluene	BRL	3.6 ug/kg dry	1	"	"	"	"	"	
Methyl tert-butyl ether	BRL	3.6 ug/kg dry	1	"	"	"	"	"	

Sample Identification	Client Project #	Matrix	Collection Date/Time	Received
Char Drum SA13928-11	0016718	Soil	14-Jun-04 10:20	15-Jun-04

Analyte(s)	*Result*	**RDL/Units*	*Dilution*	*Method Ref.*	*Prepared*	*Analyzed*	*Batch*	*Analyst*	*Flag*
Volatile Organic Compounds									
Volatile Organic Compounds by SW846 8260B		Prepared by method SW846 5035A Soil (low level)							VOC10
4-Methyl-2-pentanone (MIBK)	BRL	35.9 ug/kg dry	1	SW846 8260B	17-Jun-04	18-Jun-04	4061069	tim	
Methylene chloride	BRL	35.9 ug/kg dry	1	"	"	"	"	"	
Naphthalene	BRL	3.6 ug/kg dry	1	"	"	"	"	"	
n-Propylbenzene	BRL	3.6 ug/kg dry	1	"	"	"	"	"	
Styrene	BRL	3.6 ug/kg dry	1	"	"	"	"	"	
1,1,1,2-Tetrachloroethane	BRL	3.6 ug/kg dry	1	"	"	"	"	"	
1,1,2,2-Tetrachloroethane	BRL	3.6 ug/kg dry	1	"	"	"	"	"	
Tetrachloroethene	BRL	3.6 ug/kg dry	1	"	"	"	"	"	
Toluene	BRL	3.6 ug/kg dry	1	"	"	"	"	"	
1,2,3-Trichlorobenzene	BRL	3.6 ug/kg dry	1	"	"	"	"	"	
1,2,4-Trichlorobenzene	BRL	3.6 ug/kg dry	1	"	"	"	"	"	
1,1,1-Trichloroethane	BRL	3.6 ug/kg dry	1	"	"	"	"	"	
1,1,2-Trichloroethane	BRL	3.6 ug/kg dry	1	"	"	"	"	"	
Trichloroethene	BRL	3.6 ug/kg dry	1	"	"	"	"	"	
Trichlorofluoromethane (Freon 11)	BRL	3.6 ug/kg dry	1	"	"	"	"	"	
1,2,3-Trichloropropane	BRL	3.6 ug/kg dry	1	"	"	"	"	"	
1,2,4-Trimethylbenzene	BRL	3.6 ug/kg dry	1	"	"	"	"	"	
1,3,5-Trimethylbenzene	BRL	3.6 ug/kg dry	1	"	"	"	"	"	
Vinyl chloride	BRL	3.6 ug/kg dry	1	"	"	"	"	"	
m,p-Xylene	BRL	7.2 ug/kg dry	1	"	"	"	"	"	
o-Xylene	BRL	3.6 ug/kg dry	1	"	"	"	"	"	
Surrogate: 4-Bromofluorobenzene	*93.0*	*70-130 %*		"	"	"	"	"	
Surrogate: Toluene-d8	*96.2*	*70-130 %*		"	"	"	"	"	
Surrogate: 1,2-Dichloroethane-d4	*114*	*70-130 %*		"	"	"	"	"	
Surrogate: Dibromofluoromethane	*105*	*70-130 %*		"	"	"	"	"	
General Chemistry Parameters									
% Solids	92.8	%	1	SM2540 G Mod.	16-Jun-04	17-Jun-04	4061002	LN	

Sample Identification	Client Project #	Matrix	Collection Date/Time	Received
Trip Blank SA13928-12	0016718	Aqueous	05-Jun-04 00:00	15-Jun-04

Analyte(s)	*Result*	**RDL/Units*	*Dilution*	*Method Ref.*	*Prepared*	*Analyzed*	*Batch*	*Analyst*	*Flag*
Volatile Organic Compounds									
Volatile Organic Compounds by SW846 8260B		Prepared by method		Volatiles					
Acetone	BRL	20.0 ug/l	1	SW846 8260B	17-Jun-04	18-Jun-04	4061079	RLJ	
Acrylonitrile	BRL	1.0 ug/l	1	"	"	"	"	"	
Benzene	BRL	1.0 ug/l	1	"	"	"	"	"	
Bromobenzene	BRL	1.0 ug/l	1	"	"	"	"	"	
Bromochloromethane	BRL	1.0 ug/l	1	"	"	"	"	"	
Bromodichloromethane	BRL	1.0 ug/l	1	"	"	"	"	"	
Bromoform	BRL	1.0 ug/l	1	"	"	"	"	"	
Bromomethane	BRL	2.0 ug/l	1	"	"	"	"	"	
2-Butanone (MEK)	BRL	10.0 ug/l	1	"	"	"	"	"	
n-Butylbenzene	BRL	1.0 ug/l	1	"	"	"	"	"	
sec-Butylbenzene	BRL	1.0 ug/l	1	"	"	"	"	"	
tert-Butylbenzene	BRL	1.0 ug/l	1	"	"	"	"	"	
Carbon disulfide	BRL	5.0 ug/l	1	"	"	"	"	"	
Carbon tetrachloride	BRL	1.0 ug/l	1	"	"	"	"	"	
Chlorobenzene	BRL	1.0 ug/l	1	"	"	"	"	"	
Chloroethane	BRL	2.0 ug/l	1	"	"	"	"	"	
Chloroform	BRL	1.0 ug/l	1	"	"	"	"	"	
Chloromethane	BRL	2.0 ug/l	1	"	"	"	"	"	
2-Chlorotoluene	BRL	1.0 ug/l	1	"	"	"	"	"	
4-Chlorotoluene	BRL	1.0 ug/l	1	"	"	"	"	"	
1,2-Dibromo-3-chloropropane	BRL	2.0 ug/l	1	"	"	"	"	"	
Dibromochloromethane	BRL	1.0 ug/l	1	"	"	"	"	"	
1,2-Dibromoethane (EDB)	BRL	1.0 ug/l	1	"	"	"	"	"	
Dibromomethane	BRL	1.0 ug/l	1	"	"	"	"	"	
1,2-Dichlorobenzene	BRL	1.0 ug/l	1	"	"	"	"	"	
1,3-Dichlorobenzene	BRL	1.0 ug/l	1	"	"	"	"	"	
1,4-Dichlorobenzene	BRL	1.0 ug/l	1	"	"	"	"	"	
Dichlorodifluoromethane (Freon12)	BRL	2.0 ug/l	1	"	"	"	"	"	
1,1-Dichloroethane	BRL	1.0 ug/l	1	"	"	"	"	"	
1,2-Dichloroethane	BRL	1.0 ug/l	1	"	"	"	"	"	
1,1-Dichloroethene	BRL	1.0 ug/l	1	"	"	"	"	"	
cis-1,2-Dichloroethene	BRL	1.0 ug/l	1	"	"	"	"	"	
trans-1,2-Dichloroethene	BRL	1.0 ug/l	1	"	"	"	"	"	
1,2-Dichloropropane	BRL	1.0 ug/l	1	"	"	"	"	"	
1,3-Dichloropropane	BRL	1.0 ug/l	1	"	"	"	"	"	
2,2-Dichloropropane	BRL	1.0 ug/l	1	"	"	"	"	"	
1,1-Dichloropropene	BRL	1.0 ug/l	1	"	"	"	"	"	
cis-1,3-Dichloropropene	BRL	1.0 ug/l	1	"	"	"	"	"	
trans-1,3-Dichloropropene	BRL	1.0 ug/l	1	"	"	"	"	"	
Ethylbenzene	BRL	1.0 ug/l	1	"	"	"	"	"	
Hexachlorobutadiene	BRL	1.0 ug/l	1	"	"	"	"	"	
2-Hexanone (MBK)	BRL	10.0 ug/l	1	"	"	"	"	"	
Isopropylbenzene	BRL	1.0 ug/l	1	"	"	"	"	"	
4-Isopropyltoluene	BRL	1.0 ug/l	1	"	"	"	"	"	
Methyl tert-butyl ether	BRL	1.0 ug/l	1	"	"	"	"	"	
4-Methyl-2-pentanone (MIBK)	BRL	10.0 ug/l	1	"	"	"	"	"	

This laboratory report is not valid without an authorized signature on the cover page.

*Reportable Detection Limit BRL = Below Reporting Limit

Sample Identification	Client Project #	Matrix	Collection Date/Time	Received
Trip Blank SA13928-12	0016718	Aqueous	05-Jun-04 00:00	15-Jun-04

Analyte(s)	*Result*	**RDL/Units*	*Dilution*	*Method Ref.*	*Prepared*	*Analyzed*	*Batch*	*Analyst*	*Flag*
Volatile Organic Compounds									
Volatile Organic Compounds by SW846 8260B		Prepared by method Volatiles							
Methylene chloride	BRL	10.0 ug/l	1	SW846 8260B	17-Jun-04	18-Jun-04	4061079	RLJ	
Naphthalene	BRL	1.0 ug/l	1	"	"	"	"	"	
n-Propylbenzene	BRL	1.0 ug/l	1	"	"	"	"	"	
Styrene	BRL	1.0 ug/l	1	"	"	"	"	"	
1,1,1,2-Tetrachloroethane	BRL	1.0 ug/l	1	"	"	"	"	"	
1,1,2,2-Tetrachloroethane	BRL	1.0 ug/l	1	"	"	"	"	"	
Tetrachloroethene	BRL	1.0 ug/l	1	"	"	"	"	"	
Toluene	BRL	1.0 ug/l	1	"	"	"	"	"	
1,2,3-Trichlorobenzene	BRL	1.0 ug/l	1	"	"	"	"	"	
1,2,4-Trichlorobenzene	BRL	1.0 ug/l	1	"	"	"	"	"	
1,1,1-Trichloroethane	BRL	1.0 ug/l	1	"	"	"	"	"	
1,1,2-Trichloroethane	BRL	1.0 ug/l	1	"	"	"	"	"	
Trichloroethene	BRL	1.0 ug/l	1	"	"	"	"	"	
Trichlorofluoromethane (Freon 11)	BRL	1.0 ug/l	1	"	"	"	"	"	
1,2,3-Trichloropropane	BRL	1.0 ug/l	1	"	"	"	"	"	
1,2,4-Trimethylbenzene	BRL	1.0 ug/l	1	"	"	"	"	"	
1,3,5-Trimethylbenzene	BRL	1.0 ug/l	1	"	"	"	"	"	
Vinyl chloride	BRL	1.0 ug/l	1	"	"	"	"	"	
m,p-Xylene	BRL	2.0 ug/l	1	"	"	"	"	"	
o-Xylene	BRL	1.0 ug/l	1	"	"	"	"	"	
Surrogate: 4-Bromofluorobenzene	*92.8*	*70-130 %*		"	"	"	"	"	
Surrogate: Toluene-d8	*100*	*70-130 %*		"	"	"	"	"	
Surrogate: 1,2-Dichloroethane-d4	*121*	*70-130 %*		"	"	"	"	"	
Surrogate: Dibromofluoromethane	*118*	*70-130 %*		"	"	"	"	"	

Volatile Organic Compounds - Quality Control

Analyte(s)	Result	*RDL	Units	Spike Level	Source Result	%REC	%REC Limits	RPD	RPD Limit	Flag
Batch 4060990 - SW846 5030 Soil (high level)										
Blank (4060990-BLK1)				Prepared & Analyzed: 17-Jun-04						
Acetone	BRL	20.0	ug/kg wet							
Acrylonitrile	BRL	1.0	ug/kg wet							
Benzene	BRL	1.0	ug/kg wet							
Bromobenzene	BRL	1.0	ug/kg wet							
Bromochloromethane	BRL	1.0	ug/kg wet							
Bromodichloromethane	BRL	1.0	ug/kg wet							
Bromoform	BRL	1.0	ug/kg wet							
Bromomethane	BRL	2.0	ug/kg wet							
2-Butanone (MEK)	BRL	10.0	ug/kg wet							
n-Butylbenzene	BRL	1.0	ug/kg wet							
sec-Butylbenzene	BRL	1.0	ug/kg wet							
tert-Butylbenzene	BRL	1.0	ug/kg wet							
Carbon disulfide	BRL	5.0	ug/kg wet							
Carbon tetrachloride	BRL	1.0	ug/kg wet							
Chlorobenzene	BRL	1.0	ug/kg wet							
Chloroethane	BRL	2.0	ug/kg wet							
Chloroform	BRL	1.0	ug/kg wet							
Chloromethane	BRL	2.0	ug/kg wet							
2-Chlorotoluene	BRL	1.0	ug/kg wet							
4-Chlorotoluene	BRL	1.0	ug/kg wet							
1,2-Dibromo-3-chloropropane	BRL	2.0	ug/kg wet							
Dibromochloromethane	BRL	1.0	ug/kg wet							
1,2-Dibromoethane (EDB)	BRL	1.0	ug/kg wet							
Dibromomethane	BRL	1.0	ug/kg wet							
1,2-Dichlorobenzene	BRL	1.0	ug/kg wet							
1,3-Dichlorobenzene	BRL	1.0	ug/kg wet							
1,4-Dichlorobenzene	BRL	1.0	ug/kg wet							
Dichlorodifluoromethane (Freon12)	BRL	2.0	ug/kg wet							
1,1-Dichloroethane	BRL	1.0	ug/kg wet							
1,2-Dichloroethane	BRL	1.0	ug/kg wet							
1,1-Dichloroethene	BRL	1.0	ug/kg wet							
cis-1,2-Dichloroethene	BRL	1.0	ug/kg wet							
trans-1,2-Dichloroethene	BRL	1.0	ug/kg wet							
1,2-Dichloropropane	BRL	1.0	ug/kg wet							
1,3-Dichloropropane	BRL	1.0	ug/kg wet							
2,2-Dichloropropane	BRL	1.0	ug/kg wet							
1,1-Dichloropropene	BRL	1.0	ug/kg wet							
cis-1,3-Dichloropropene	BRL	1.0	ug/kg wet							
trans-1,3-Dichloropropene	BRL	1.0	ug/kg wet							
Ethylbenzene	BRL	1.0	ug/kg wet							
Hexachlorobutadiene	BRL	1.0	ug/kg wet							
2-Hexanone (MBK)	BRL	10.0	ug/kg wet							
Isopropylbenzene	BRL	1.0	ug/kg wet							
4-Isopropyltoluene	BRL	1.0	ug/kg wet							
Methyl tert-butyl ether	BRL	1.0	ug/kg wet							
4-Methyl-2-pentanone (MIBK)	BRL	10.0	ug/kg wet							
Methylene chloride	BRL	10.0	ug/kg wet							
Naphthalene	BRL	1.0	ug/kg wet							
n-Propylbenzene	BRL	1.0	ug/kg wet							
Styrene	BRL	1.0	ug/kg wet							
1,1,1,2-Tetrachloroethane	BRL	1.0	ug/kg wet							
1,1,2,2-Tetrachloroethane	BRL	1.0	ug/kg wet							
Tetrachloroethene	BRL	1.0	ug/kg wet							
Toluene	BRL	1.0	ug/kg wet							

Volatile Organic Compounds - Quality Control

Analyte(s)	Result	*RDL	Units	Spike Level	Source Result	%REC	%REC Limits	RPD	RPD Limit	Flag
Batch 4060990 - SW846 5030 Soil (high level)										
Blank (4060990-BLK1)				Prepared & Analyzed: 17-Jun-04						
1,2,3-Trichlorobenzene	BRL	1.0	ug/kg wet							
1,2,4-Trichlorobenzene	BRL	1.0	ug/kg wet							
1,1,1-Trichloroethane	BRL	1.0	ug/kg wet							
1,1,2-Trichloroethane	BRL	1.0	ug/kg wet							
Trichloroethene	BRL	1.0	ug/kg wet							
Trichlorofluoromethane (Freon 11)	BRL	1.0	ug/kg wet							
1,2,3-Trichloropropane	BRL	1.0	ug/kg wet							
1,2,4-Trimethylbenzene	BRL	1.0	ug/kg wet							
1,3,5-Trimethylbenzene	BRL	1.0	ug/kg wet							
Vinyl chloride	BRL	1.0	ug/kg wet							
m,p-Xylene	BRL	2.0	ug/kg wet							
o-Xylene	BRL	1.0	ug/kg wet							
Surrogate: 4-Bromofluorobenzene	*46.4*		ug/kg wet	*50.0*		*92.8*	*70-130*			
Surrogate: Toluene-d8	*51.4*		ug/kg wet	*50.0*		*103*	*70-130*			
Surrogate: 1,2-Dichloroethane-d4	*51.7*		ug/kg wet	*50.0*		*103*	*70-130*			
Surrogate: Dibromofluoromethane	*50.9*		ug/kg wet	*50.0*		*102*	*70-130*			
Matrix Spike (4060990-MS1)				**Source: SA13928-06RE1**	Prepared & Analyzed: 16-Jun-04					
Benzene	102000	4780	ug/kg dry		BRL		70-130			
Chlorobenzene	92700	4780	ug/kg dry		BRL		70-130			
1,1-Dichloroethene	105000	4780	ug/kg dry		BRL		70-130			
Toluene	90300	4780	ug/kg dry		BRL		70-130			
Trichloroethene	97400	4780	ug/kg dry		BRL		70-130			
Surrogate: 4-Bromofluorobenzene	*45.7*		ug/kg dry	*50.0*		*91.4*	*70-130*			
Surrogate: Toluene-d8	*47.6*		ug/kg dry	*50.0*		*95.2*	*70-130*			
Surrogate: 1,2-Dichloroethane-d4	*49.4*		ug/kg dry	*50.0*		*98.8*	*70-130*			
Surrogate: Dibromofluoromethane	*52.0*		ug/kg dry	*50.0*		*104*	*70-130*			
Matrix Spike Dup (4060990-MSD1)				**Source: SA13928-06RE1**	Prepared & Analyzed: 16-Jun-04					
Benzene	113000	4780	ug/kg dry		BRL		70-130		30	
Chlorobenzene	107000	4780	ug/kg dry		BRL		70-130		30	
1,1-Dichloroethene	124000	4780	ug/kg dry		BRL		70-130		30	
Toluene	111000	4780	ug/kg dry		BRL		70-130		30	
Trichloroethene	113000	4780	ug/kg dry		BRL		70-130		30	
Surrogate: 4-Bromofluorobenzene	*44.2*		ug/kg dry	*50.0*		*88.4*	*70-130*			
Surrogate: Toluene-d8	*48.1*		ug/kg dry	*50.0*		*96.2*	*70-130*			
Surrogate: 1,2-Dichloroethane-d4	*49.6*		ug/kg dry	*50.0*		*99.2*	*70-130*			
Surrogate: Dibromofluoromethane	*52.0*		ug/kg dry	*50.0*		*104*	*70-130*			
Batch 4061069 - SW846 5035A Soil (low level)										
Blank (4061069-BLK1)				Prepared & Analyzed: 17-Jun-04						
Acetone	BRL	100	ug/kg wet							
Acrylonitrile	BRL	5.0	ug/kg wet							
Benzene	BRL	5.0	ug/kg wet							
Bromobenzene	BRL	5.0	ug/kg wet							
Bromochloromethane	BRL	5.0	ug/kg wet							
Bromodichloromethane	BRL	5.0	ug/kg wet							
Bromoform	BRL	5.0	ug/kg wet							
Bromomethane	BRL	10.0	ug/kg wet							
2-Butanone (MEK)	BRL	50.0	ug/kg wet							
n-Butylbenzene	BRL	5.0	ug/kg wet							
sec-Butylbenzene	BRL	5.0	ug/kg wet							
tert-Butylbenzene	BRL	5.0	ug/kg wet							
Carbon disulfide	BRL	25.0	ug/kg wet							
Carbon tetrachloride	BRL	5.0	ug/kg wet							

Volatile Organic Compounds - Quality Control

Analyte(s)	Result	*RDL	Units	Spike Level	Source Result	%REC	%REC Limits	RPD	RPD Limit	Flag
Batch 4061069 - SW846 5035A Soil (low level)										
Blank (4061069-BLK1)				Prepared & Analyzed: 17-Jun-04						
Chlorobenzene	BRL	5.0	ug/kg wet							
Chloroethane	BRL	10.0	ug/kg wet							
Chloroform	BRL	5.0	ug/kg wet							
Chloromethane	BRL	10.0	ug/kg wet							
2-Chlorotoluene	BRL	5.0	ug/kg wet							
4-Chlorotoluene	BRL	5.0	ug/kg wet							
1,2-Dibromo-3-chloropropane	BRL	10.0	ug/kg wet							
Dibromochloromethane	BRL	5.0	ug/kg wet							
1,2-Dibromoethane (EDB)	BRL	5.0	ug/kg wet							
Dibromomethane	BRL	5.0	ug/kg wet							
1,2-Dichlorobenzene	BRL	5.0	ug/kg wet							
1,3-Dichlorobenzene	BRL	5.0	ug/kg wet							
1,4-Dichlorobenzene	BRL	5.0	ug/kg wet							
Dichlorodifluoromethane (Freon12)	BRL	10.0	ug/kg wet							
1,1-Dichloroethane	BRL	5.0	ug/kg wet							
1,2-Dichloroethane	BRL	5.0	ug/kg wet							
1,1-Dichloroethene	BRL	5.0	ug/kg wet							
cis-1,2-Dichloroethene	BRL	5.0	ug/kg wet							
trans-1,2-Dichloroethene	BRL	5.0	ug/kg wet							
1,2-Dichloropropane	BRL	5.0	ug/kg wet							
1,3-Dichloropropane	BRL	5.0	ug/kg wet							
2,2-Dichloropropane	BRL	5.0	ug/kg wet							
1,1-Dichloropropene	BRL	5.0	ug/kg wet							
cis-1,3-Dichloropropene	BRL	5.0	ug/kg wet							
trans-1,3-Dichloropropene	BRL	5.0	ug/kg wet							
Ethylbenzene	BRL	5.0	ug/kg wet							
Hexachlorobutadiene	BRL	5.0	ug/kg wet							
2-Hexanone (MBK)	BRL	50.0	ug/kg wet							
Isopropylbenzene	BRL	5.0	ug/kg wet							
4-Isopropyltoluene	BRL	5.0	ug/kg wet							
Methyl tert-butyl ether	BRL	5.0	ug/kg wet							
4-Methyl-2-pentanone (MIBK)	BRL	50.0	ug/kg wet							
Methylene chloride	BRL	50.0	ug/kg wet							
Naphthalene	BRL	5.0	ug/kg wet							
n-Propylbenzene	BRL	5.0	ug/kg wet							
Styrene	BRL	5.0	ug/kg wet							
1,1,1,2-Tetrachloroethane	BRL	5.0	ug/kg wet							
1,1,2,2-Tetrachloroethane	BRL	5.0	ug/kg wet							
Tetrachloroethene	BRL	5.0	ug/kg wet							
Toluene	BRL	5.0	ug/kg wet							
1,2,3-Trichlorobenzene	BRL	5.0	ug/kg wet							
1,2,4-Trichlorobenzene	BRL	5.0	ug/kg wet							
1,1,1-Trichloroethane	BRL	5.0	ug/kg wet							
1,1,2-Trichloroethane	BRL	5.0	ug/kg wet							
Trichloroethene	BRL	5.0	ug/kg wet							
Trichlorofluoromethane (Freon 11)	BRL	5.0	ug/kg wet							
1,2,3-Trichloropropane	BRL	5.0	ug/kg wet							
1,2,4-Trimethylbenzene	BRL	5.0	ug/kg wet							
1,3,5-Trimethylbenzene	BRL	5.0	ug/kg wet							
Vinyl chloride	BRL	5.0	ug/kg wet							
m,p-Xylene	BRL	10.0	ug/kg wet							
o-Xylene	BRL	5.0	ug/kg wet							
Surrogate: 4-Bromofluorobenzene	*46.4*		ug/kg wet	*50.0*		*92.8*	*70-130*			
Surrogate: Toluene-d8	*50.4*		ug/kg wet	*50.0*		*101*	*70-130*			

This laboratory report is not valid without an authorized signature on the cover page.

*Reportable Detection Limit BRL = Below Reporting Limit

Volatile Organic Compounds - Quality Control

Analyte(s)	Result	*RDL	Units	Spike Level	Source Result	%REC	%REC Limits	RPD	RPD Limit	Flag
Batch 4061069 - SW846 5035A Soil (low level)										
Blank (4061069-BLK1)				Prepared & Analyzed: 17-Jun-04						
Surrogate: 1,2-Dichloroethane-d4	*55.0*		ug/kg wet	*50.0*		*110*	*70-130*			
Surrogate: Dibromofluoromethane	*51.7*		ug/kg wet	*50.0*		*103*	*70-130*			
Batch 4061079 - Volatiles										
Blank (4061079-BLK1)				Prepared & Analyzed: 17-Jun-04						
Acetone	BRL	20.0	ug/l							
Acrylonitrile	BRL	1.0	ug/l							
Benzene	BRL	1.0	ug/l							
Bromobenzene	BRL	1.0	ug/l							
Bromochloromethane	BRL	1.0	ug/l							
Bromodichloromethane	BRL	1.0	ug/l							
Bromoform	BRL	1.0	ug/l							
Bromomethane	BRL	2.0	ug/l							
2-Butanone (MEK)	BRL	10.0	ug/l							
n-Butylbenzene	BRL	1.0	ug/l							
sec-Butylbenzene	BRL	1.0	ug/l							
tert-Butylbenzene	BRL	1.0	ug/l							
Carbon disulfide	BRL	5.0	ug/l							
Carbon tetrachloride	BRL	1.0	ug/l							
Chlorobenzene	BRL	1.0	ug/l							
Chloroethane	BRL	2.0	ug/l							
Chloroform	BRL	1.0	ug/l							
Chloromethane	BRL	2.0	ug/l							
2-Chlorotoluene	BRL	1.0	ug/l							
4-Chlorotoluene	BRL	1.0	ug/l							
1,2-Dibromo-3-chloropropane	BRL	2.0	ug/l							
Dibromochloromethane	BRL	1.0	ug/l							
1,2-Dibromoethane (EDB)	BRL	1.0	ug/l							
Dibromomethane	BRL	1.0	ug/l							
1,2-Dichlorobenzene	BRL	1.0	ug/l							
1,3-Dichlorobenzene	BRL	1.0	ug/l							
1,4-Dichlorobenzene	BRL	1.0	ug/l							
Dichlorodifluoromethane (Freon12)	BRL	2.0	ug/l							
1,1-Dichloroethane	BRL	1.0	ug/l							
1,2-Dichloroethane	BRL	1.0	ug/l							
1,1-Dichloroethene	BRL	1.0	ug/l							
cis-1,2-Dichloroethene	BRL	1.0	ug/l							
trans-1,2-Dichloroethene	BRL	1.0	ug/l							
1,2-Dichloropropane	BRL	1.0	ug/l							
1,3-Dichloropropane	BRL	1.0	ug/l							
2,2-Dichloropropane	BRL	1.0	ug/l							
1,1-Dichloropropene	BRL	1.0	ug/l							
cis-1,3-Dichloropropene	BRL	1.0	ug/l							
trans-1,3-Dichloropropene	BRL	1.0	ug/l							
Ethylbenzene	BRL	1.0	ug/l							
Hexachlorobutadiene	BRL	1.0	ug/l							
2-Hexanone (MBK)	BRL	10.0	ug/l							
Isopropylbenzene	BRL	1.0	ug/l							
4-Isopropyltoluene	BRL	1.0	ug/l							
Methyl tert-butyl ether	BRL	1.0	ug/l							
4-Methyl-2-pentanone (MIBK)	BRL	10.0	ug/l							
Methylene chloride	BRL	10.0	ug/l							
Naphthalene	BRL	1.0	ug/l							
n-Propylbenzene	BRL	1.0	ug/l							

Volatile Organic Compounds - Quality Control

Analyte(s)	Result	*RDL Units	Spike Level	Source Result	%REC	%REC Limits	RPD	RPD Limit	Flag
Batch 4061079 - Volatiles									
Blank (4061079-BLK1)			Prepared & Analyzed: 17-Jun-04						
Styrene	BRL	1.0 ug/l							
1,1,1,2-Tetrachloroethane	BRL	1.0 ug/l							
1,1,2,2-Tetrachloroethane	BRL	1.0 ug/l							
Tetrachloroethene	BRL	1.0 ug/l							
Toluene	BRL	1.0 ug/l							
1,2,3-Trichlorobenzene	BRL	1.0 ug/l							
1,2,4-Trichlorobenzene	BRL	1.0 ug/l							
1,1,1-Trichloroethane	BRL	1.0 ug/l							
1,1,2-Trichloroethane	BRL	1.0 ug/l							
Trichloroethene	BRL	1.0 ug/l							
Trichlorofluoromethane (Freon 11)	BRL	1.0 ug/l							
1,2,3-Trichloropropane	BRL	1.0 ug/l							
1,2,4-Trimethylbenzene	BRL	1.0 ug/l							
1,3,5-Trimethylbenzene	BRL	1.0 ug/l							
Vinyl chloride	BRL	1.0 ug/l							
m,p-Xylene	BRL	2.0 ug/l							
o-Xylene	BRL	1.0 ug/l							
Surrogate: 4-Bromofluorobenzene	*46.0*	ug/l	*50.0*		*92.0*	*70-130*			
Surrogate: Toluene-d8	*48.8*	ug/l	*50.0*		*97.6*	*70-130*			
Surrogate: 1,2-Dichloroethane-d4	*57.0*	ug/l	*50.0*		*114*	*70-130*			
Surrogate: Dibromofluoromethane	*55.8*	ug/l	*50.0*		*112*	*70-130*			
Duplicate (4061079-DUP1)		**Source: SA13872-04**	Prepared & Analyzed: 17-Jun-04						
Acetone	BRL	20.0 ug/l		BRL				30	
Acrylonitrile	BRL	1.0 ug/l		BRL				30	
Benzene	BRL	1.0 ug/l		BRL				30	
Bromobenzene	BRL	1.0 ug/l		BRL				30	
Bromochloromethane	BRL	1.0 ug/l		BRL				30	
Bromodichloromethane	BRL	1.0 ug/l		BRL				30	
Bromoform	BRL	1.0 ug/l		BRL				30	
Bromomethane	BRL	2.0 ug/l		BRL				30	
2-Butanone (MEK)	BRL	10.0 ug/l		BRL				30	
n-Butylbenzene	BRL	1.0 ug/l		BRL				30	
sec-Butylbenzene	BRL	1.0 ug/l		BRL				30	
tert-Butylbenzene	BRL	1.0 ug/l		BRL				30	
Carbon disulfide	BRL	5.0 ug/l		BRL				30	
Carbon tetrachloride	BRL	1.0 ug/l		BRL				30	
Chlorobenzene	BRL	1.0 ug/l		BRL				30	
Chloroethane	BRL	2.0 ug/l		BRL				30	
Chloroform	BRL	1.0 ug/l		BRL				30	
Chloromethane	BRL	2.0 ug/l		BRL				30	
2-Chlorotoluene	BRL	1.0 ug/l		BRL				30	
4-Chlorotoluene	BRL	1.0 ug/l		BRL				30	
1,2-Dibromo-3-chloropropane	BRL	2.0 ug/l		BRL				30	
Dibromochloromethane	BRL	1.0 ug/l		BRL				30	
1,2-Dibromoethane (EDB)	BRL	1.0 ug/l		BRL				30	
Dibromomethane	BRL	1.0 ug/l		BRL				30	
1,2-Dichlorobenzene	BRL	1.0 ug/l		BRL				30	
1,3-Dichlorobenzene	BRL	1.0 ug/l		BRL				30	
1,4-Dichlorobenzene	BRL	1.0 ug/l		BRL				30	
Dichlorodifluoromethane (Freon12)	BRL	2.0 ug/l		BRL				30	
1,1-Dichloroethane	BRL	1.0 ug/l		BRL				30	
1,2-Dichloroethane	BRL	1.0 ug/l		BRL				30	
1,1-Dichloroethene	BRL	1.0 ug/l		BRL				30	
cis-1,2-Dichloroethene	BRL	1.0 ug/l		BRL				30	

Volatile Organic Compounds - Quality Control

Analyte(s)	Result	*RDL	Units	Spike Level	Source Result	%REC	%REC Limits	RPD	RPD Limit	Flag
Batch 4061079 - Volatiles										
Duplicate (4061079-DUP1)		**Source: SA13872-04**		Prepared & Analyzed: 17-Jun-04						
trans-1,2-Dichloroethene	BRL	1.0	ug/l		BRL				30	
1,2-Dichloropropane	BRL	1.0	ug/l		BRL				30	
1,3-Dichloropropane	BRL	1.0	ug/l		BRL				30	
2,2-Dichloropropane	BRL	1.0	ug/l		BRL				30	
1,1-Dichloropropene	BRL	1.0	ug/l		BRL				30	
cis-1,3-Dichloropropene	BRL	1.0	ug/l		BRL				30	
trans-1,3-Dichloropropene	BRL	1.0	ug/l		BRL				30	
Ethylbenzene	BRL	1.0	ug/l		BRL				30	
Hexachlorobutadiene	BRL	1.0	ug/l		BRL				30	
2-Hexanone (MBK)	BRL	10.0	ug/l		BRL				30	
Isopropylbenzene	BRL	1.0	ug/l		BRL				30	
4-Isopropyltoluene	BRL	1.0	ug/l		BRL				30	
Methyl tert-butyl ether	4.5	1.0	ug/l		4.5			0.00	30	
4-Methyl-2-pentanone (MIBK)	BRL	10.0	ug/l		BRL				30	
Methylene chloride	BRL	10.0	ug/l		BRL				30	
Naphthalene	BRL	1.0	ug/l		BRL				30	
n-Propylbenzene	BRL	1.0	ug/l		BRL				30	
Styrene	BRL	1.0	ug/l		BRL				30	
1,1,1,2-Tetrachloroethane	BRL	1.0	ug/l		BRL				30	
1,1,2,2-Tetrachloroethane	BRL	1.0	ug/l		BRL				30	
Tetrachloroethene	BRL	1.0	ug/l		BRL				30	
Toluene	BRL	1.0	ug/l		BRL				30	
1,2,3-Trichlorobenzene	BRL	1.0	ug/l		BRL				30	
1,2,4-Trichlorobenzene	BRL	1.0	ug/l		BRL				30	
1,1,1-Trichloroethane	BRL	1.0	ug/l		BRL				30	
1,1,2-Trichloroethane	BRL	1.0	ug/l		BRL				30	
Trichloroethene	BRL	1.0	ug/l		BRL				30	
Trichlorofluoromethane (Freon 11)	BRL	1.0	ug/l		BRL				30	
1,2,3-Trichloropropane	BRL	1.0	ug/l		BRL				30	
1,2,4-Trimethylbenzene	BRL	1.0	ug/l		BRL				30	
1,3,5-Trimethylbenzene	BRL	1.0	ug/l		BRL				30	
Vinyl chloride	BRL	1.0	ug/l		BRL				30	
m,p-Xylene	BRL	2.0	ug/l		BRL				30	
o-Xylene	BRL	1.0	ug/l		BRL				30	
Surrogate: 4-Bromofluorobenzene	*46.2*		ug/l	*50.0*		*92.4*	*70-130*			
Surrogate: Toluene-d8	*47.0*		ug/l	*50.0*		*94.0*	*70-130*			
Surrogate: 1,2-Dichloroethane-d4	*54.8*		ug/l	*50.0*		*110*	*70-130*			
Surrogate: Dibromofluoromethane	*54.4*		ug/l	*50.0*		*109*	*70-130*			
Matrix Spike (4061079-MS1)		**Source: SA13872-04**		Prepared & Analyzed: 17-Jun-04						
Benzene	17.2	1.0	ug/l		BRL		70-130			
Chlorobenzene	17.8	1.0	ug/l		BRL		70-130			
1,1-Dichloroethene	17.1	1.0	ug/l		BRL		70-130			
Toluene	18.0	1.0	ug/l		BRL		70-130			
Trichloroethene	17.7	1.0	ug/l		BRL		70-130			
Surrogate: 4-Bromofluorobenzene	*45.9*		ug/l	*50.0*		*91.8*	*70-130*			
Surrogate: Toluene-d8	*49.4*		ug/l	*50.0*		*98.8*	*70-130*			
Surrogate: 1,2-Dichloroethane-d4	*55.5*		ug/l	*50.0*		*111*	*70-130*			
Surrogate: Dibromofluoromethane	*55.5*		ug/l	*50.0*		*111*	*70-130*			
Matrix Spike Dup (4061079-MSD1)		**Source: SA13872-04**		Prepared & Analyzed: 17-Jun-04						
Benzene	17.3	1.0	ug/l		BRL		70-130		30	
Chlorobenzene	18.2	1.0	ug/l		BRL		70-130		30	
1,1-Dichloroethene	17.2	1.0	ug/l		BRL		70-130		30	
Toluene	18.4	1.0	ug/l		BRL		70-130		30	

Volatile Organic Compounds - Quality Control

Analyte(s)	Result	*RDL	Units	Spike Level	Source Result	%REC	%REC Limits	RPD	RPD Limit	Flag
Batch 4061079 - Volatiles										
Matrix Spike Dup (4061079-MSD1)		**Source: SA13872-04**		Prepared & Analyzed: 17-Jun-04						
Trichloroethene	18.0	1.0	ug/l		BRL		70-130		30	
Surrogate: 4-Bromofluorobenzene	*46.2*		ug/l	*50.0*		*92.4*	*70-130*			
Surrogate: Toluene-d8	*49.1*		ug/l	*50.0*		*98.2*	*70-130*			
Surrogate: 1,2-Dichloroethane-d4	*55.2*		ug/l	*50.0*		*110*	*70-130*			
Surrogate: Dibromofluoromethane	*54.1*		ug/l	*50.0*		*108*	*70-130*			
Batch 4061088 - SW846 5035A Soil (low level)										
Blank (4061088-BLK1)				Prepared & Analyzed: 17-Jun-04						
Acetone	BRL	100	ug/kg wet							
Acrylonitrile	BRL	5.0	ug/kg wet							
Benzene	BRL	5.0	ug/kg wet							
Bromobenzene	BRL	5.0	ug/kg wet							
Bromochloromethane	BRL	5.0	ug/kg wet							
Bromodichloromethane	BRL	5.0	ug/kg wet							
Bromoform	BRL	5.0	ug/kg wet							
Bromomethane	BRL	10.0	ug/kg wet							
2-Butanone (MEK)	BRL	50.0	ug/kg wet							
n-Butylbenzene	BRL	5.0	ug/kg wet							
sec-Butylbenzene	BRL	5.0	ug/kg wet							
tert-Butylbenzene	BRL	5.0	ug/kg wet							
Carbon disulfide	BRL	25.0	ug/kg wet							
Carbon tetrachloride	BRL	5.0	ug/kg wet							
Chlorobenzene	BRL	5.0	ug/kg wet							
Chloroethane	BRL	10.0	ug/kg wet							
Chloroform	BRL	5.0	ug/kg wet							
Chloromethane	BRL	10.0	ug/kg wet							
2-Chlorotoluene	BRL	5.0	ug/kg wet							
4-Chlorotoluene	BRL	5.0	ug/kg wet							
1,2-Dibromo-3-chloropropane	BRL	10.0	ug/kg wet							
Dibromochloromethane	BRL	5.0	ug/kg wet							
1,2-Dibromoethane (EDB)	BRL	5.0	ug/kg wet							
Dibromomethane	BRL	5.0	ug/kg wet							
1,2-Dichlorobenzene	BRL	5.0	ug/kg wet							
1,3-Dichlorobenzene	BRL	5.0	ug/kg wet							
1,4-Dichlorobenzene	BRL	5.0	ug/kg wet							
Dichlorodifluoromethane (Freon12)	BRL	10.0	ug/kg wet							
1,1-Dichloroethane	BRL	5.0	ug/kg wet							
1,2-Dichloroethane	BRL	5.0	ug/kg wet							
1,1-Dichloroethene	BRL	5.0	ug/kg wet							
cis-1,2-Dichloroethene	BRL	5.0	ug/kg wet							
trans-1,2-Dichloroethene	BRL	5.0	ug/kg wet							
1,2-Dichloropropane	BRL	5.0	ug/kg wet							
1,3-Dichloropropane	BRL	5.0	ug/kg wet							
2,2-Dichloropropane	BRL	5.0	ug/kg wet							
1,1-Dichloropropene	BRL	5.0	ug/kg wet							
cis-1,3-Dichloropropene	BRL	5.0	ug/kg wet							
trans-1,3-Dichloropropene	BRL	5.0	ug/kg wet							
Ethylbenzene	BRL	5.0	ug/kg wet							
Hexachlorobutadiene	BRL	5.0	ug/kg wet							
2-Hexanone (MBK)	BRL	50.0	ug/kg wet							
Isopropylbenzene	BRL	5.0	ug/kg wet							
4-Isopropyltoluene	BRL	5.0	ug/kg wet							
Methyl tert-butyl ether	BRL	5.0	ug/kg wet							
4-Methyl-2-pentanone (MIBK)	BRL	50.0	ug/kg wet							

Volatile Organic Compounds - Quality Control

Analyte(s)	Result	*RDL	Units	Spike Level	Source Result	%REC	%REC Limits	RPD	RPD Limit	Flag
Batch 4061088 - SW846 5035A Soil (low level)										
Blank (4061088-BLK1)				Prepared & Analyzed: 17-Jun-04						
Methylene chloride	BRL	50.0	ug/kg wet							
Naphthalene	BRL	5.0	ug/kg wet							
n-Propylbenzene	BRL	5.0	ug/kg wet							
Styrene	BRL	5.0	ug/kg wet							
1,1,1,2-Tetrachloroethane	BRL	5.0	ug/kg wet							
1,1,2,2-Tetrachloroethane	BRL	5.0	ug/kg wet							
Tetrachloroethene	BRL	5.0	ug/kg wet							
Toluene	BRL	5.0	ug/kg wet							
1,2,3-Trichlorobenzene	BRL	5.0	ug/kg wet							
1,2,4-Trichlorobenzene	BRL	5.0	ug/kg wet							
1,1,1-Trichloroethane	BRL	5.0	ug/kg wet							
1,1,2-Trichloroethane	BRL	5.0	ug/kg wet							
Trichloroethene	BRL	5.0	ug/kg wet							
Trichlorofluoromethane (Freon 11)	BRL	5.0	ug/kg wet							
1,2,3-Trichloropropane	BRL	5.0	ug/kg wet							
1,2,4-Trimethylbenzene	BRL	5.0	ug/kg wet							
1,3,5-Trimethylbenzene	BRL	5.0	ug/kg wet							
Vinyl chloride	BRL	5.0	ug/kg wet							
m,p-Xylene	BRL	10.0	ug/kg wet							
o-Xylene	BRL	5.0	ug/kg wet							
Surrogate: 4-Bromofluorobenzene	*46.3*		ug/kg wet	*50.0*		*92.6*	*70-130*			
Surrogate: Toluene-d8	*51.1*		ug/kg wet	*50.0*		*102*	*70-130*			
Surrogate: 1,2-Dichloroethane-d4	*57.3*		ug/kg wet	*50.0*		*115*	*70-130*			
Surrogate: Dibromofluoromethane	*52.1*		ug/kg wet	*50.0*		*104*	*70-130*			

General Chemistry Parameters - Quality Control

Analyte(s)	Result	*RDL	Units	Spike Level	Source Result	%REC	%REC Limits	RPD	RPD Limit	Flag
Batch 4061002 - General Preparation										
Duplicate (4061002-DUP1)		Source: SA13930-05		Prepared: 16-Jun-04 Analyzed: 17-Jun-04						
% Solids	88.7		%		89.0			0.338	20	

Notes and Definitions

VOC6	The production of Acetone and other ketones is commonly seen when using Sodium Bisulfate in the SW 846 5035A extraction technique.
VOC10	The VOC field preserved soil sample is not within the 1:1 weight to volume ratio as recommended by SW846 methods 5030 and 5035 but may be within the 1:1 volume to volume ratio.
vext2	Field extracted
S-GC	Surrogate recovery outside of control limits. The data was accepted based on valid recovery of the remaining surrogate.
QC-1	Analyte out of acceptance range.
BRL	Below Reporting Limit - Analyte NOT DETECTED at or above the reporting limit
dry	Sample results reported on a dry weight basis
NR	Not Reported
RPD	Relative Percent Difference

A plus sign (+) in the Method Reference column indicates the method is not accredited by NELAC.

Laboratory Control Sample (LCS): A known matrix spiked with compound(s) representative of the target analytes, which is used to document laboratory performance.

Matrix Duplicate: An intra-laboratory split sample which is used to document the precision of a method in a given sample matrix.

Matrix Spike: An aliquot of a sample spiked with a known concentration of target analyte(s). The spiking occurs prior to sample preparation and analysis. A matrix spike is used to document the bias of a method in a given sample matrix.

Method Blank: An analyte-free matrix to which all reagents are added in the same volumes or proportions as used in sample processing. The method blank should be carried through the complete sample preparation and analytical procedure. The method blank is used to document contamination resulting from the analytical process.

Method Detection Limit (MDL): The minimum concentration of a substance that can be measured and reported with 99% confidence that the analyte concentration is greater than zero and is determined from analysis of a sample in a given matrix type containing the analyte.

Reportable Detection Limit (RDL): The lowest concentration that can be reliably achieved within specified limits of precision and accuracy during routine laboratory operating conditions. For many analytes the RDL analyte concentration is selected as the lowest non-zero standard in the calibration curve. While the RDL is approximately 5 to 10 times the MDL, the RDL for each sample takes into account the sample volume/weight, extract/digestate volume, cleanup procedures and, if applicable, dry weight correction. Sample RDLs are highly matrix-dependent.

Surrogate: An organic compound which is similar to the target analyte(s) in chemical composition and behavior in the analytical process, but which is not normally found in environmental samples. These compounds are spiked into all blanks, standards, and samples prior to analysis. Percent recoveries are calculated for each surrogate.

Validated by:
Hanibal C. Tayeh, Ph.D.
Nicole Brown

13928 [illegible]

SPECTRUM ANALYTICAL, INC.
Featuring
HANIBAL TECHNOLOGY

CHAIN OF CUSTODY RECORD

Page 1 of 2

Special Handling:
☐ Standard TAT - 7 to 10 business days
☒ Rush TAT - Date Needed: 6/18/04
· All TATs subject to laboratory approval. Min. 24-hour notification needed for rushes.
· Samples disposed of after 60 days unless otherwise instructed.

Report To: ERM-New England, Inc.
Two Hartford Square West, Suite 300
146 Wyllys Street
Hartford, CT 06106
Project Mgr.: Bob Drake

Invoice To: WH4000425 [illegible]
Same
P.O. No.: RQN:

Project No.: 0016716
Site Name: Intelidata
Location: New Milford State: CT
Sampler(s): J. Fernet

1=$Na_2S_2O_3$ 2=HCl 3=H_2SO_4 4=HNO_3 5=NaOH 6=Ascorbic Acid
7=CH_3OH 8=$NaHSO_4$ 9= 10=

DW=Drinking Water GW=Groundwater WW=Wastewater
O=Oil SW= Surface Water SO=Soil SL=Sludge A=Air
X1= X2= X3=

G=Grab C=Composite

Lab Id:	Sample Id:	Date:	Time:	Type	Matrix	Preservative	# of VOA Vials	# of Amber Glass	# of Clear Glass	# of Plastic		8260								QA Reporting Notes: (check if needed)
13928-01	SVE-1a	6/11/04	0950	G	SO	7,8	3	1				X								State specific reporting standards *If applicable, please list below.*
-02	ASW-2a		1140									X								☐ Provide MCP CAM Report Were all field QC requirements met as per MADEP CAM Section 2.0? ☐ Yes ☐ No *(Response required for CAM report)*
-03	SUMP-1a		1350									X								
-04	SVE-2a		1420									X								
-05	SUMP-5a		1630									X								
-06	SUMP-6a	6/11/04	1725									X								
-07	SUMP-4a	6/12/04	0910									X								
-08	SUMP-3a		1000									X								
-09	ASM-2a		1050									X								id change per C.W.
-10	ASW-1a	6/12/04	1400									X								fax

SUMP vas in victor 6/23/04 JF

☒ Fax results when available to (860) 524-5680
☐ E-mail to
EDD Format

Condition upon receipt: ☐ Iced ☐ Ambient ☐ °C 0

Relinquished by:	Received by:	Date:	Time:
[signature]	[signature]	6/13/04	
[signature]	[signature]	6/14/04	1320
		6/15/04	1430

13928 11

SPECTRUM ANALYTICAL, INC.
Featuring
HANIBAL TECHNOLOGY

CHAIN OF CUSTODY RECORD

Page 2 of 2

Special Handling:
- ☐ Standard TAT - 7 to 10 business days
- ☒ Rush TAT - Date Needed: 6/18/04
- All TATs subject to laboratory approval. Min. 24-hour notification needed for rushes.
- Samples disposed of after 60 days unless otherwise instructed.

Report To: See Page 1

Project Mgr.:

Invoice To: Same

P.O. No.: RQN:

Project No.: 00 161718
Site Name: Intelidata
Location: New Milford State: CT
Sampler(s): J. Fernet

1=$Na_2S_2O_3$ 2=HCl 3=H_2SO_4 4=HNO_3 5=NaOH 6=Ascorbic Acid
7=CH_3OH 8= $NaHSO_4$ 9= 10=

DW=Drinking Water GW=Groundwater WW=Wastewater
O=Oil SW= Surface Water SO=Soil SL=Sludge A=Air
X1= X2= X3=

G=Grab C=Composite

QA Reporting Notes: (check if needed)

State specific reporting standards *If applicable, please list below.*

☐ Provide MCP CAM Report
Were all field QC requirements met as per MADEP CAM Section 2.0?
☐ Yes ☐ No
(Response required for CAM report)

Lab Id:	Sample Id:	Date:	Time:	Type	Matrix	Preservative	# of VOA Vials	# of Amber Glass	# of Clear Glass	# of Plastic		8260							
13928-11	CHAR Drum	6/14/04	1020	C	SO	7,8	3	2				X							
↓ -12	Trip Blank	~~6/15~~		G	-	2	1					X							

☒ Fax results when available to (860) 524-5680
☐ E-mail to
EDD Format

Condition upon receipt: ☐ Iced ☐ Ambient ☐ °C 0

Relinquished by:	Received by:	Date:	Time:
[illegible]	[illegible]	~~6/13/04~~ 6/14/04	1320
[illegible]	[illegible]	6/15/04	1430

11 Almgren Drive • Agawam, Massachusetts 01001 • 413-789-9018 • Fax 413-789-4076 • www.spectrum-analytical.com

in refrigerator

APPENDIX C

Memorandum

Environmental Resources Management, Inc.

77 Hartland Street, Suite 300
East Hartford, CT 06108

(860)-466-8500
(860)-466-8501 Fax

To:	File
From:	Jason Fernet, PE
Date:	December 20, 2005
Subject:	Assessment of Air Permit Requirements 80 Pickett District Road, New Milford, Connecticut ERM Project No. 0037300

ERM-New England, Inc. (ERM) is in the process of performing investigation and remediation activities at the property located at 80 Pickett District Road in New Milford, Connecticut. This work is being performed in accordance with the Connecticut DEP's Remediation Standard Regulations (RSRs) and the obligations under the Connecticut Transfer Act (CTA). This memorandum was prepared to assess whether the remediation activity may require an air permit.

During ERM's subsurface investigation, residual chlorinated volatile organic compounds (CVOCs) were detected in the soil and groundwater under the building on the site property. ERM performed a pilot study to evaluate the use of a Soil Vapor Extraction (SVE) system as a remedial measure to reduce VOC concentrations in soil toward compliance with the applicable remedial criteria. Data collected during the pilot test was used to perform air emission calculations for assessing the need for an air emission permit and/or the use of off-gas treatment. This memorandum summarizes that assessment.

Pilot Test

In July 2005, ERM conducted a one week pilot test using two SVE wells to evaluate the effectiveness of the proposed treatment system and to estimate emissions from the full-scale system. ERM installed the pilot test wells in the locations that were determined to have the highest concentrations of soil and soil gas contamination. Therefore, the concentrations were assumed to represent the worst-case scenario. The SVE offgas was run through a single carbon canister to limit VOC emissions.

ERM collected air samples from the each SVE well, the overall effluent, and after the carbon canister to determine the removal efficiency. The results of the pilot study indicate that due to the low CVOC concentrations, an emission control system will not be required for this system. The emission calculations supporting this are discussed below.

Emission Calculations

The attached tables summarize the highest concentrations of CVOCs detected in the SVE wells during the pilot test. As mentioned above, these concentrations represent the expected worst-case scenario located on the site property. Hourly emission rates were calculated based on the concentrations using the expected design flow rate of 560 CFM. Annual potential to emit rates were calculated based on 8,760 hours per year of operation. As seen in the attached table, the total potential Hazardous Air Pollutant (HAP) emissions were calculated to be 1.2 tons per year and individual HAP emissions were calculated to be a fraction of this amount.

ERM compared the potential emissions to RCSA Section 22a-174-3a to determine permitting needs. These regulations require a permit to be obtained for any individual source that has the potential to emit 10 tons per year or more of each HAP or a total of 25 tons per year or more for total HAP emissions. As noted in the attached table, potential HAP emissions are well below the permitting thresholds, therefore, no permit is required.

ERM also evaluated the Maximum Allowable Stack Concentration (MASC) of HAPs as regulated under RCSA Section 22a-174-29. ERM calculated the actual stack concentration (ASC) for each of the identified HAPs as shown on Table 2, attached. The ASC for each compound was calculated to be below the MASC, and the system is in compliance with this regulation.

Full-Scale System

ERM is anticipating the completion of installation and start-up of the full-scale SVE system by February 1, 2006. This system will be comprised of 7 SVE wells routed to a common blower rated for a design flow rate of 560 CFM.

During initial startup of the system, samples of the blower exhaust will be collected weekly for the first 4 weeks and then monthly thereafter. After each sampling round, the ASC will be compared to the MASC to ensure that the system remains in compliance with the regulations. If the ASC continues to be below the MASC then the emission control system will not be installed. However if the ASC exceeds the MASC at any time during

the systems operation, ERM will connect an emission control system immediately.

If needed, the emission control system will consist of an air cooled heat exchanger followed by two granular activated carbon (GAC) canisters connected in a series. The primary GAC canister will be used to adsorb up to 99+% of PCE, TCE, TCA, DCE, and cisDCE in the blower effluent. The second set of canister will be used to "polish" the discharge from the first, to ensure that the emissions remain below the MASC.

The effluent from each carbon canister will be sampled and analyzed for CVOCs on a weekly basis in order to detect initial breakthrough of the primary carbon canisters. Once breakthrough of the primary canister occurs, the primary canister will be removed from the system, the secondary canister will be placed in primary service, and a new canister will be added in its place. This ensures that there will always be a double level of protection against fugitive emissions. After initial breakthrough, the sampling protocol will be modified accordingly.

Conclusions

Based on the data collected through the pilot study and presented in the attached tables, it appears that the SVE system can be run without emission controls since the calculated potential to emit is well below the 10 tons per year per individual HAP and 25 tons per year for total HAPs emitted from the source. Additionally, the calculated ASCs for the contaminants of concern are below the respective MASC.

ERM will re-evaluate the need for controls on a monthly basis during monitoring activities. If concentrations in the effluent approach MASC concentrations, ERM will immediately connect the system controls as outlined above.

cc: A. Davis, Esq.
R. Drake, PhD, PE. LEP
K. King, LEP

Potential to Emit Calculations

80 Pickett District Road, New Milford, CT

Designed Blower Rating:	560	ft^3/min	Conversions:
	0.26	m^3/sec	35.3 m^3/ft^3
Potential Hrs of operation/year	8760	Potential Hrs/year	454 g/lb
			2,000 lb/ton

[redacted]	209	846	198,935	0.20	4.39E-04	3.84	1.92E-03
	76.4	309	72,721	0.07	1.60E-04	1.40	7.02E-04
	1,900	7,538	1,808,499	1.81	3.99E-03	34.93	1.75E-02
	162	642	154,198	0.15	3.40E-04	2.98	1.49E-03
	331	2,537	315,059	0.32	6.95E-04	6.08	3.04E-03
	127,000	692,916	120,883,853	121	0.266	2335	1.17
	2,670	14,349	2,541,416	2.54	5.60E-03	49.08	2.45E-02
	394	2,672	375,025	0.38	8.27E-04	7.24	3.62E-03
						2440	1.22

Notes:
Maximum concentrations (ug/m3) were obtained from pilot test data
PTE was calculated assuming maximum designed blower rating and continuous operation.

MASC Evaluation for SVE System

80 Pickett District Road, New Milford, CT

Stack Flowrate (ACFM)=	560	0.264 cms
Distance to Property line (feet)=	20	10.00 meters
Stack Height (feet)=	15	4.57 meters

	846	8,000		Pass
	309	20		Pass
	642	15,000		Pass
	2,537	152,000		Pass
	692,916	38,000		Pass
	14,349	1,350		Pass
	2,672	1,700		Pass

Note: ASC numbers above are from the highest concentrations detected during the pilot study.

APPENDIX D

Figures

Environmental
Resources
Management, Inc.

Intelidata
80 Pickett District Road
New Milford, CT

Figure 1:Site Location Map
ERM Project No. 0016718

From TOPO! CD ROM-CT
Scale 1:24,000
USGS Map: New Milford, CT

US EPA New England
RCRA Document Management System
Image Target Sheet

RDMS Document ID # 104506

Facility Name: CEE Assoc.

Facility ID#: CTD044121697

Phase Classification: R-13

Purpose of Target Sheet:

[X] Oversized (in Site File) [ ] Oversized (in Map Drawer)

[ ] Page(s) Missing (Please Specify Below)

[ ] Potential FOIA Exempt [ ] Other (Please Provide Purpose Below)

Description of Oversized Material, if applicable:

Figure 2: SVE / AS Well Layout & AOC Map

[X] Map [ ] Photograph [] Other (Please Specify Below)

* Please Contact the EPA New England RCRA Records Center to View This Document *

US EPA New England
RCRA Document Management System
Image Target Sheet

RDMS Document ID # 104506

Facility Name: CEE Assoc.

Facility ID#: CTD044121697

Phase Classification: R-13

Purpose of Target Sheet:

[X] Oversized (in Site File) [ ] Oversized (in Map Drawer)

[ ] Page(s) Missing (Please Specify Below)

[ ] Potential FOIA Exempt [ ] Other (Please Provide Purpose Below)

Description of Oversized Material, if applicable:

Figure 3: Bedrock Cross Section

[X] Map [ ] Photograph [] Other (Please Specify Below)

* Please Contact the EPA New England RCRA Records Center to View This Document *