J.R. SIMPLOT COMPANY 1130 W. HIGHWAY 30 POCATELLO, IDAHO 83204
P.O. BOX 912 POCATELLO, IDAHO 83204
(208) 235-5602 FAX (208) 235-5699

CORPORATE – POCATELLO OFFICE

June 16, 2015

Mary Kauffman
USDA Forest Service – Caribou National Forest
1405 Hollipark Drive
Idaho Falls, Idaho 83401

Subject: **Smoky Canyon Mine Remedial Investigation/Feasibility Study (RI/FS), Final Pilot Study Work Plan and Sampling and Analysis Plan Biological Selenium Removal Treatment Technology Fluidized Bed Bioreactor, Addendum 02 - June 2015**

Dear Mary:

Attached to this cover in electronic format, please find correspondences between Pharmer Engineering, Simplot's Owner-Engineer and RSCI, the Design-Build Engineer for the treatability study pilot (Biological Selenium Removal Treatment Technology Fluidized Bed Bioreactor) located near Hoopes Spring on Simplot property at the Smoky Canyon Mine. These correspondences are accompanied by a detailed explanation of an in-line booster pump to be added to the operating system; specifically to the treated effluent line from the aeration tank to the sand filter. A deficiency in hydraulics was identified between the aeration tank and the sand filter. The pump is necessary to provide sufficient hydraulic head to operate the sand filter. Although the addition of this pump does not alter the operation of the system or the function of either the aeration tank or the sand filter, it is a minor deviation from the original design, which was dependent solely on elevation to provide the necessary head pressure to operate the sand filter.

With your approval, Simplot intends to operate the treatability study pilot using the booster pump described herein. This submission will be Addendum 02 to the September 2014 Work Plan.

Please contact me if you have any questions.

Sincerely,

Monty Johnson
Environmental Engineering Manager

Enclosures

cc: Submitted to the following in electronic (pdf) format only via email. Paper copies available upon request.

Mary Kauffman - USDA Forest Service, 410 East Hooper, Soda Springs, ID 83276
James Alexander - USDA Office of the General Counsel
Wayne Crowther - IDEQ, 444 Hospital Way, Suite 300, Pocatello, ID 83201
Brady Johnson - IDEQ, 1410 North Hilton, Boise, ID 83706
Colleen O'Hara-Epperly- BLM, 4350 South Cliffs Dr., Pocatello, ID 83204
Sandi Fisher- USFWS, 4425 Burley Dr., Suite A, Chubbuck, ID 83202
Matt Wilkening - USEPA, 950 West Bannock St., Suite 900, Boise, ID 83702
Ted Yackulic - USEPA, 1200 Sixth Avenue, Seattle, WA 98101 (electronic files only)
Kelly Wright - Shoshone-Bannock Tribes, P.O. Box 306, Fort Hall, ID 83203
Susan Hanson -(b) (6) , Pocatello, ID 83202
Gary Billman - IDL, 3563 Ririe Highway, Idaho Falls, ID 83401
Rick McCormick- CH2M Hill, 322 East Front St., Suite 200, Boise, ID 83702
Jeff Osterman - CH2M Hill, 322 East Front St., Suite 200, Boise, ID 83702
Doug Scott - CH2M Hill, 59 Lilac Court, Pagosa Springs, CP 81147 (electronic files only)
Alan Prouty - J.R. Simplot Company, P.O. Box 27, Boise, ID 83707
Burl Ackerman - J.R. Simplot Company, P.O. Box 27, Boise, ID 83707
Chad Gentry - J.R. Simplot Company, P.O. Box 1270, Afton, WY 83110
Andy Koulermos - Formation Environmental, 2500 55th St., Boulder, CO 80301

CERCLA Record: Tina Robison, USDA Forest Service, 410 East Hooper, Soda Springs, ID 83276

Memo

PHARMER ENGINEERING
1998 W. Judith Lane
Boise, Idaho 83705
Phone (208) 433-1900
Fax (208) 433-1901
www.pharmereng.com

To: Monty Johnson, J.R. Simplot

CC: Jonathan Witt, J.R. Simplot

From: Jeremy Aulbach, PE

Date: June 16, 2015

Re: Smoky Canyon Selenium Pilot Treatment System - PH I - HS-0001
Aeration Tank to Sand Filter Hydraulics Solution

Mr. Johnson,

The hydraulics between the aeration tank and the sand filter at the Smoky Canyon Selenium Pilot Treatment System were inadequate to meet the system design requirements. The aeration tank design freeboard of 3 ft 8 inches cannot be maintained while the sand filter is operated within the standard operating headloss range.

The Contractor RSCI and their engineering team MWH, along with support from J.R. Simplot operations staff, has performed exhaustive tests including camera survey to identify any potential obstructions in the piping between the aeration tank and the sand filter.

The Contractors has provided a piping modification and pump addition to remedy the deficient hydraulics between the aeration tank and the sand filter. The design of this pumping system is included as an enclosure to this memorandum. The system modification uses a centrifugal pump to draw water from the aeration tank and pump it to the sand filter. This will allow the aeration tank to maintain adequate freeboard as required for seismic design of the tank.

The new pump and variable frequency drive will be speed controlled via tank level set points programmed into the plant PLC system. Above a maximum water level the pump will increase pumping to lower tank level and below a minimum set point the pump will decrease pumping to maintain water within the operational band.

Sincerely,

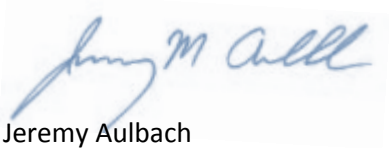

Jeremy Aulbach
Pharmer Engineering

Enclosures: 2015_05_12 - Notice of Deficient Hydraulics
2015_05_16 - SL016 – Proposed Solution to Hydraulic Deficiency – Pharmer Redline
2015_05_21 - Response to Proposed Solution to Hydraulic Deficiency

Memo

PHARMER ENGINEERING
1998 W. Judith Lane
Boise, Idaho 83705
Phone (208) 433-1900
Fax (208) 433-1901
www.pharmereng.com

To: Zeke Johnson, RSCI

CC: Trent Dyksterhouse, RSCI
Monty Johnson, J.R. Simplot
Jonathan Witt, J.R. Simplot

From: Jeremy Aulbach, PE

Date: May 21, 2015

Re: Smoky Canyon Selenium Pilot Treatment System - PH I - HS-0001
Aeration Tank to Sand Filter Hydraulics

Dear Zeke Johnson,

The proposed solution to the hydraulic deficiency between the aeration tank and the sand filter is acceptable. The two phased approach with an interim solution via in line pumping and a final solution of raising the aeration tank is acceptable. A material change of the interim piping from PVC to 304 SST is requested. The final operating water level in the tank will be determined from the headloss monitoring during the interim operation. A final operating water level recommendation from RSCI will be requested during the Phase II aeration tank design. A redline of the "20150516 – SL016 - Proposed Solution to Hydraulic Deficiency" is provided as clarification of this narrative.

Sincerely,

Jeremy Aulbach
Pharmer Engineering

MT 36115
ID RCE-1066
ID 12164-U-1-2-3
WA RECORSO33QK
NV 0067472
www.rscigroup.com

May 16, 2015

Serial No. 016

Acceptable final height of tank to be determined following headloss monitoring during interim operations. Final tank operating height recommendation from RSCI to be provided during Phase II tank design.

Pharmer Engineering
1998 W. Judith Lane
Boise, Idaho 83705

Attention:	Jeremy Aulbach
Subject:	Proposed Solution to Aeration Tank Hydraulic Issue
Reference:	Smoky Canyon Mine Selenium Pilot Water Treatment Plant

Dear Jeremy Aulbach:

We are in receipt of your Memo dated 5/12/15 regarding deficient hydraulics between the Aeration Tank and Sand Filter. We recognize this deficiency and offer the following solution:

TEMPORARY SOLUTION:

A pump will be added to the piping circuit between the Aeration Tank and Sand Filter. The pump will be located inside the building adjacent to Sand Filter. See attached drawing of this proposed configuration. This pump will be driven by a VFD that will have an ethernet connection to communicate the water level in the aeration tank from the existing ultrasonic sensor. A butterfly valve will be provided after the pump to manually throttle flow and ensure proper operation of the system. Product information for the proposed pump and butterfly valve is attached for review. Please note that the valve and temporary piping is proposed as PVC.

When this temporary system is no longer necessary, it can be removed, and a stainless steel spool piece will be installed in its place.

This system can be ordered, delivered, installed, and started-up within 2 weeks from approval.

PERMANENT SOLUTION:

The permanent solution is to raise the elevation of the Aeration Tank. This solution will take time, and it is very expensive. RSCI would propose to raise Aeration Tank #1 by 2ft to 4ft (to be determined) at the same time that Aeration Tank #2 is installed during Phase II of the project, which would be in the Summer of 2016. This will be more cost effective for RSCI, and it will provide the best overall final solution given this deficiency.

Please let us know if this phased solution is acceptable to Simplot.

MT 36115
ID RCE-1066
ID 12164-U-1-2-3
WA RECORSO33QK
NV 0067472
www.rscigroup.com

Thanks for your attention to this matter. If you have any questions regarding this correspondence, then please contact me at (208) 890-4291.

Sincerely,

Zeke Johnson
RSCI

CC: Monty Johnson, Jonathan Witt

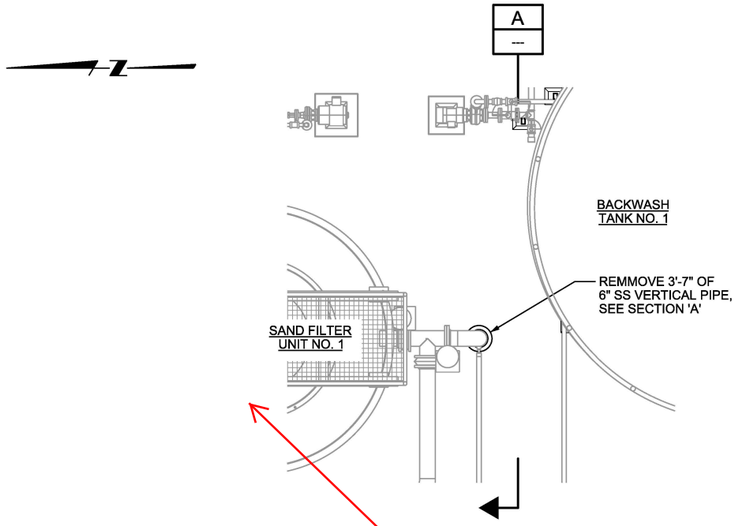

DEMO PLAN

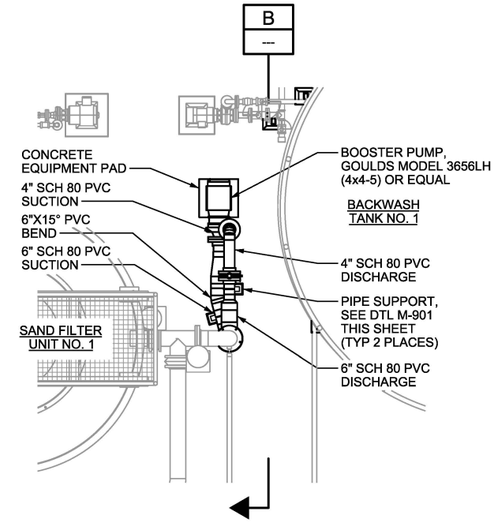

PLAN

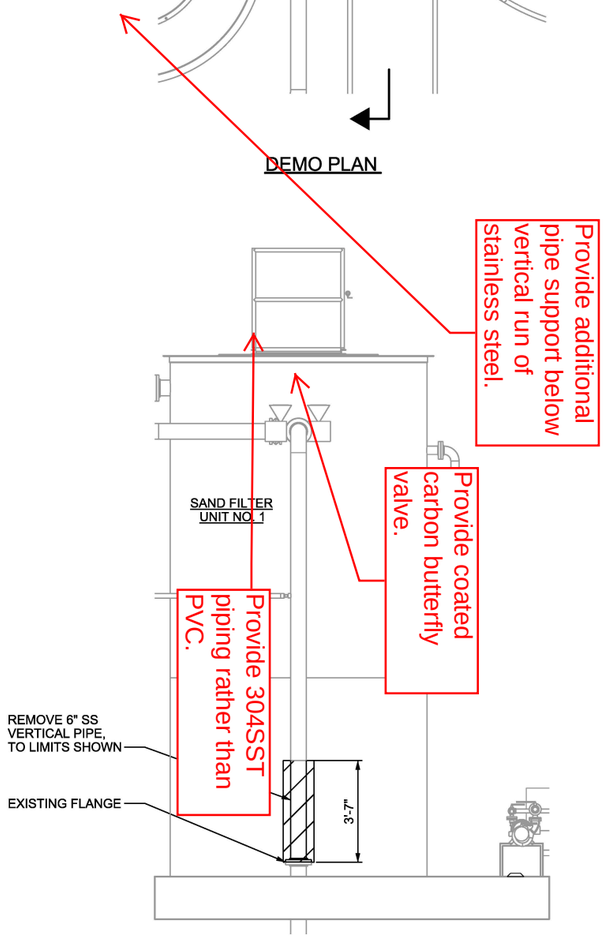

DEMO SECTION A ---

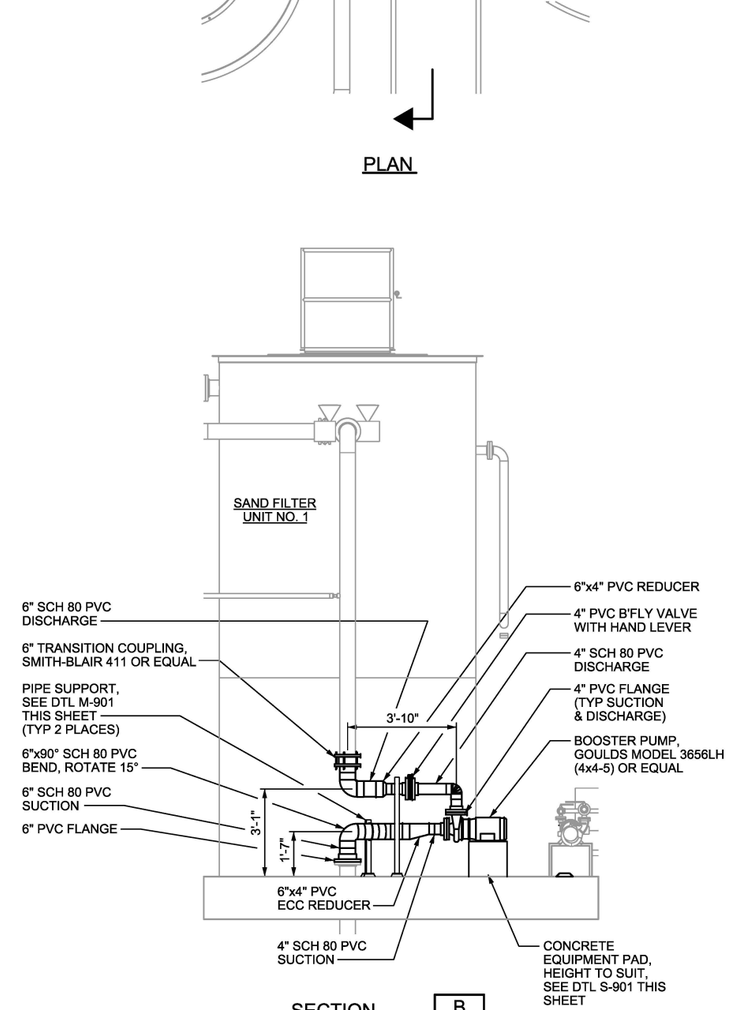

SECTION B ---

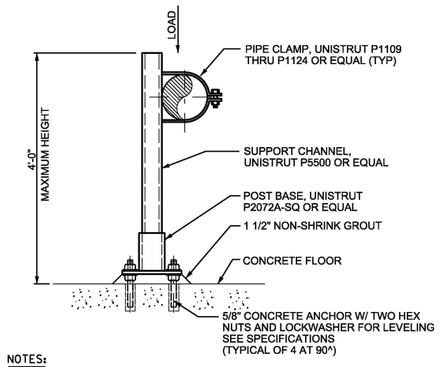

NOTES:
1. FOR ADDITIONAL REQUIREMENTS SEE SPECIFICATION SECTION 'PIPE SUPPORTS'.
2. THIS PIPE SUPPORT IS LIMITED TO PIPES 6" DIAMETER AND SMALLER.

UPRIGHT PIPE SUPPORT (FOR PIPE 6" DIAMETER AND SMALLER) — M-901

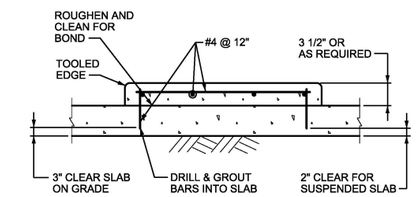

CONCRETE EQUIPMENT PAD — S-901

PROFESSIONAL ENGINEER REGISTERED 9996 STATE OF IDAHO GREGORY A. CLARK 5/20/2015

REV	DATE	BY	DESCRIPTION

SCALE: 3/8" = 1'-0"

WARNING: 0 ½ 1 — IF THIS BAR DOES NOT MEASURE 1" THEN DRAWING IS NOT TO SCALE

DESIGNED G CLARK
DRAWN P UDE
CHECKED D MIKLAS

CONFORMED DRAWING

This drawing is a conformed drawing and is not a part of the contract documents. This drawing is provided as a courtesy to the contractor. In the event of a discrepancy between the conformed drawing and the contract documents, the contract documents shall govern.

MWH. RSCI

SMOKY CANYON MINE
SELENIUM TREATMENT SYSTEM PILOT PROJECT

J.R. SIMPLOT COMPANY
TREATMENT BUILDING
MECHANICAL
EFFLUENT BOOSTER PUMP - PLANS AND SECTIONS

SHEET SUPM-1
JobNo 10704835

File: SUPM-1 Headloss Pump Plans & Sections.dgn Model: Layout1 ColorTable: bw.ctb DesignScript: MWH_plot_Pentable_2012i.pen PlotScale: 0.166667:1 User: paude Plot Date: 15-MAY-2015 17:41

C.H. Spencer & Company

3475 N Cimmeron Circle
Pocatello, Idaho 83204
Phone: 801-975-0300 x.110
Fax: 801-972-5216

To: **RSCI**
Attn: **Sabino**
Date: **May 14, 2015**
Reference: **Smokey Canyon**

Sabino:

C.H. Spencer is pleased to offer the following equipment for the Smokey Mountain Project.
The Gould's Pump being proposed on will operate at the 250 gpm specified, we have oversized the impeller a little bit in order to allow flexibility in the system. We have also provided a VFD that will allow you to ramp up or down the speed in order to meet the desired flow required for your tank level. A level transmitter can be wired to this VFD in order to keep the level in the tank constant. We also would recommend using a valve on the discharge of the pump in order to create additional head due to the low head requirements in the system. With the VFD and discharge valve the desired flow can be achieved while allowing the pump to operate on the proper point on the curve.

I: EQUIPMENT DESCRIPTION:

Pricing for the pump we spoke about yesterday is as follows:
Quantity (1) Gould's 3656 Pump
-Rated for 250 gpm at 6 ft. of head
-1 HP/460V/3Ph/60Hz
-Standard Construction

Quantity (1) Pump Smart ABB ACS 800 VFD
-Nema 1 Rating
-480V/3Ph/60Hz
-Standard Construction

Quantity (1) 6" Valve
-PVC
-150# Flange

Let me know if you have any questions.
Daniel Beck
C.H. Spencer
Sales Engineer

TECHNICAL BROCHURE
B3656LH

3656/3756LH

LOW HEAD, CAST IRON, BRONZE FITTED, END-SUCTION PUMPS

BOMBAS DE SUCCIÓN FINAL, PEQUEÑA CARGA, HIERRO FUNDIDO, RECUBIERTAS DE BRONCE

GOULDS WATER TECHNOLOGY
a xylem brand

A FULL RANGE OF PRODUCT FEATURES
UNA GAMA TOTAL DE CARACTERÍSTICAS DEL PRODUCTO

The 3656LH and 3756LH pumps from Goulds Water Technology have been designed with technical benefits to meet the needs of both manufacturers and users in a variety of refrigeration and cooling applications as well as irrigation applications.

- Performance testing of every pump we manufacture assures trouble free operation.
- Back pull-out to reduce maintenance down time.
- Standard John Crane Type 21 mechanical seal for both reliability and availability.
- Available in all iron or bronze fitted construction for application versatility.
- Replaceable wearing components include stainless steel shaft sleeve and casing wear ring to maintain peak efficiency.
- Enclosed impeller design, dynamic balancing and renewable wear ring reduce losses affecting performance and pump life.
- Suction and discharge connections are NPT threaded except for the 4 x 4-5 and 5 x 5-6 sizes which have ANSI class 125 flat faced flanges.
- Casing mounting is standard with a vertical discharge however can be rotated in 90 degree increments for side discharge arrangements.

Las bombas 3656LH y 3756LH de Goulds Water Technology han sido diseñadas con beneficios técnicos para cumplir con las necesidades de fabricantes y usuarios en una variedad de aplicaciones para refrigeración y enfriamiento, además de aplicaciones de irrigación.

- *Pruebas de funcionamiento de cada bomba que fabricamos, aseguran un funcionamiento sin problemas.*
- *Extracción trasera para reducir el tiempo de mantenimiento.*
- *Sello mecánico estándar John Crane Tipo 21 para funcionalidad y disponibilidad.*
- *Disponibles en todas las construcciones de hierro o recubiertas de bronce para variedad de aplicaciones.*
- *Componentes reemplazables sujetos a desgaste incluyen camisas de eje de acero inoxidable y anillos de desgaste de la carcasa para mantener un rendimiento óptimo.*
- *Las conexiones de succión y descarga son NPT roscadas, excepto por los tamaños de 4 x 4-5 y 5 x 5-6 que tienen bridas de cara plana ANSI Clase 125.*
- *El montaje de la carcasa es estándar con una descarga vertical; sin embargo, se puede rotar en incrementos de 90 grados para disposiciones de descarga lateral.*

3656LH, 3756LH NUMBERING SYSTEM
3656LH, 3756LH SISTEMA DE NUMERACIÓN

The various versions of the 3656LH and 3756LH are identified by a product code number on the pump label. This number is also the catalog number for the pump. The meaning of each digit in the product code number is shown below.

Las diferentes versiones de las 3656LH y 3756LH se identifican con un número de código del producto en la etiqueta de la bomba. Este número es también el número de catálogo para la bomba. El significado de cada dígito en el número de código del producto se muestra abajo.

Example Product Code,
Ejemplo Código del Producto

51 BF 1 F 2 B 0

Mechanical Seal and O-ring,
Sello Mecánico y Anillo '0'

Seal Code, *Código del Sello*	Rotary, *Rotativo*	Stationary, *Estacionario*	Elastomers, *Elastómeros*	Metal Parts, *Partes Metálicas*	Part No., *Pleza Número*
0	Carbon	Ceramic, *Cerámica*	BUNA	Type 316 SS, *Tipo 316 SS*	10K13
1		Sil-Carb., *Caburo de silicona*	EPR		10K19
3			Viton		10K27
5	Sil-Carb.				10K64

Note: 10K27 replaces obsolete 10K25,
***Nota:** La 10K27 reemplace la obsoleta 10K25.*

Impeller Option Code,
Código del Impulsor Opcional

Impeller Code, *Código del Impulsor*	Pump Size, *Tamaño de la Bomba*				
	2 x 2 – 5	2½ x 2½ – 5	3 x 3 – 5	4 x 4 – 5	5 x 5 – 6
	Dia.	Dia.	Dia.	Dia.	Dia.
A	4"	4 3/16"	4 3/8"	4 3/4"	5½ x 4½"
B	3 3/4	3 15/16	4 3/16	4 5/8	5 5/16 x 4 5/16
C	3½	3 3/4	4	4½	5 x 3 7/8
D	3¼	3 9/16	3 13/16	4 3/16	5 x 3 9/16
E	3	3 3/8	3 5/8	4	5 x 3 1/32

Driver, *Conductor*
1 = 1 PH, ODP
2 = 3 PH, ODP
3 = 575 V, ODP
4 = 1 PH, TEFC
5 = 3 PH, TEFC
6 = 575 V, TEFC
7 = 3 PH, XP
8 = 575 V, XP
9 = 3 PH, TEFC, PREFF.
0 = 1 PH, XP

HP Rating, *HP Potencia*
C = ½ E = 1 G = 2 J = 5 L = 10
D = ¾ F = 1½ H = 3 K = 7½ M = 15

Replace with "FRM" for 3756LH
Reemplace con "FRM" para 3756LH

Driver: Hertz/Pole/RPM,
Conductor: Hercios/Polo/RPM
1 = 60 Hz, 2 pole, 3500 RPM
2 = 60 Hz, 4 pole, 1750 RPM
3 = 60 Hz, 6 pole, 1150 RPM
4 = 50 Hz, 2 pole, 2900 RPM
5 = 50 Hz, 4 pole, 1450 RPM

Material
AI = All iron, *Todo hierro*
BF = Bronze fitted, *Recubiertas de bronce*

Pump Size, *Tamaño de la Bomba*
51 = 2 x 2 – 5
52 = 2½ x 2½ – 5
53 = 3 x 3 – 5
54 = 4 x 4 – 5
55 = 5 x 5 – 6

PERFORMANCE CURVES, *CURVAS DE FUNCIONAMIENTO*

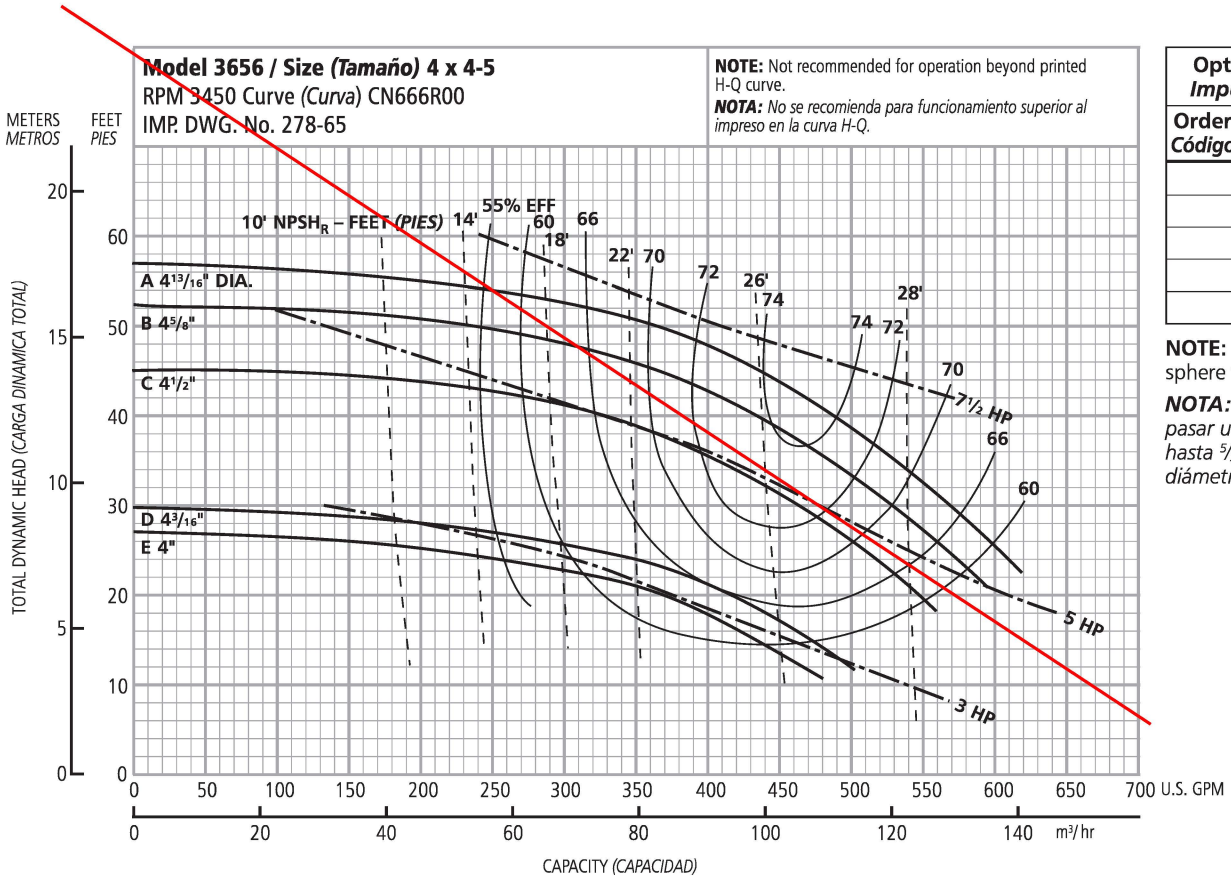

Optional Impeller *Impulsor optativo*	
Ordering Code ***Código de pedido***	**Dia.** ***Diá.***
A	4 3/4"
B	4 5/8
C	4 1/2
D	4 3/16
E	4

NOTE: Pump will pass a sphere to 5/32" diameter.

NOTA: *La bomba dejará pasar una esfera de hasta 5/32 de pulgada de diámetro.*

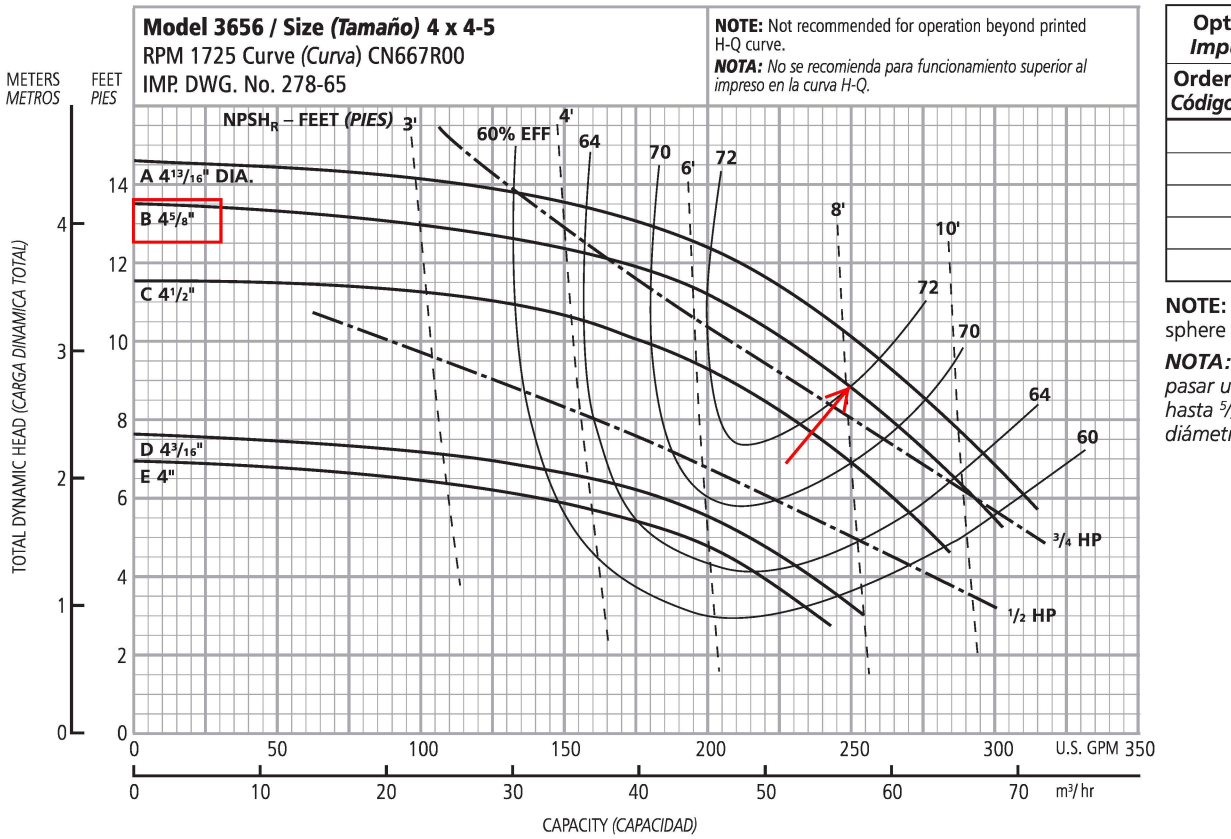

Optional Impeller *Impulsor optativo*	
Ordering Code ***Código de pedido***	**Dia.** ***Diá.***
A	4 3/4"
B	4 5/8
C	4 1/2
D	4 3/16
E	4

NOTE: Pump will pass a sphere to 5/32" diameter.

NOTA: *La bomba dejará pasar una esfera de hasta 5/32 de pulgada de diámetro.*

MATERIALS OF CONSTRUCTION, *MATERIALES DE CONSTRUCCIÓN*

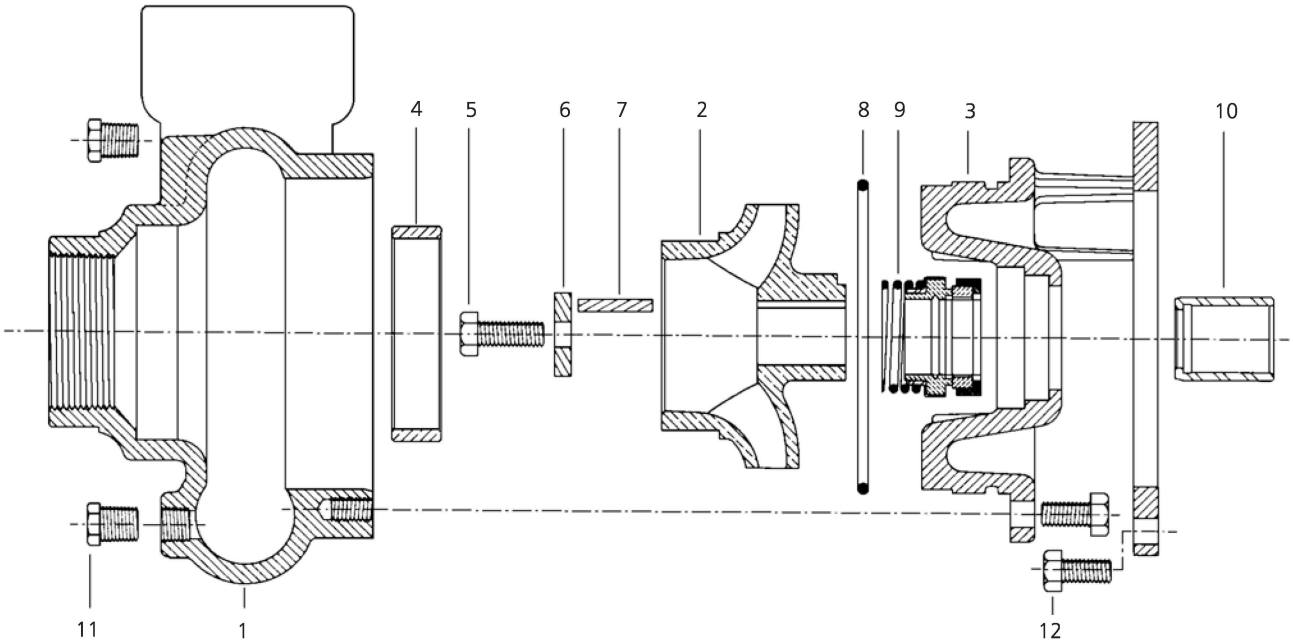

Item No., *Parte No.*	Description, *Descripción*	Material, *Materiales*
1	Casing, *Carcasa*	Cast iron, *Hierro fundido*
2	Impeller, *Impulsor*	Cast iron/Sil-brass, *Hierro fundido/Bronce*
3	Motor adapter, *Adaptador del motor*	Cast iron, *Hierro fundido*
4	Casing wearing ring, *Anillo de desgaste de la carcasa*	Cast iron/Sil-brass, *Hierro fundido/Bronce*
5	Impeller bolt, *Tornillo del impulsor*	304 SS, *304 Acero inoxidable*
6	Impeller washer, *Arandela del impulsor*	
7	Square key way, *Chavetero cuadrado*	
8	O-ring, *Anillo 'O'*	BUNA/EPR/Viton
9		
10	Shaft sleeve, *Camisa del eje*	304 SS, *304 Acero inoxidable*
11	¼" pipe plug, *Tapón macho roscado de ¼"*	Steel, Zinc plated *Acero, cinc plateado*
12	Hex head screw, *Tornillo de cabeza hexagonal*	Steel, zinc plated *Acero, cinc plateado*

Seal Code, *Código del Sello*	Rotary, *Rotativo*	Stationary, *Estacionario*	Elastomers, *Elastómeros*	Metal Parts, *Partes Metálicas*	Part No., *Pleza Número*
0	Carbon	Ceramic	BUNA	Type 316 SS, *Tipo 316 SS*	10K13
1	Carbon	Sil-Carb.	EPR		10K19
3	Carbon	Sil-Carb.	Viton		10K27
5	Sil-Carb.	Sil-Carb.	Viton		10K64

Material, *Materiales*	Engineering Standard, *Estándar Aprobado*
Cast iron, *Hierro fundido*	ASTM A48CL30
Silicon brass (lead free), *Bronce del silicio (sin plomo)*	ASTM B584 C87500 (modified, *modificado*)

3656LH DIMENSIONS AND WEIGHTS, *3656LH DIMENSIONES Y PESOS*

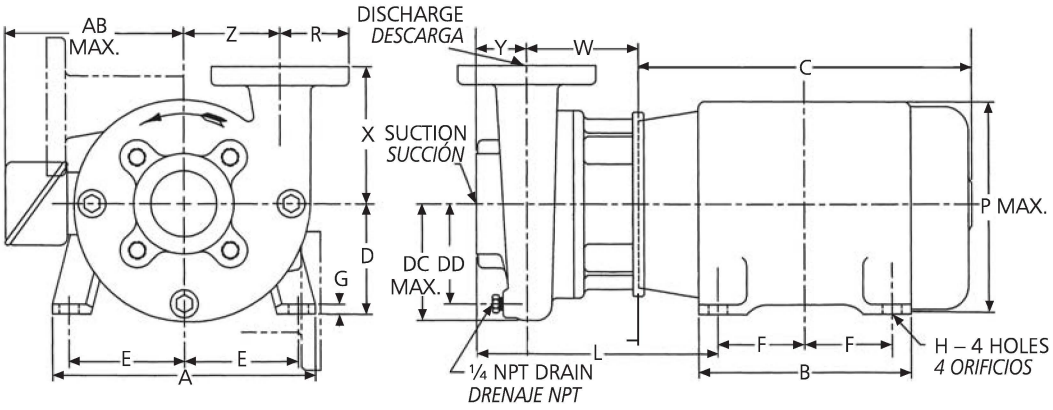

Close Coupled Dimensions Determined by Pump, *Dimensiones del Acople Cerrado Determinadas por la Bomba*

Pump Size, *Tamaño de la Bomba*	Suction*, *Succión*	Discharge*, *Descarga*	DC Max., *DC Máx.*	DD	R	W	X	Y	Z	Wt. (lbs.), *Peso (libras)*	Dimension "L" Motor Frame Size, *Tamaño del bastidor del motor de dimensión "L"*		
											140	180	210
4 x 4 – 5	4		6½	5¼	4½	4¼	7	4	4½	110	11⅜	12	12⅞
5 x 5 – 6	5		8	6¼	5		8		5½	125			

* ANSI Class 125 flanges, *Bridas ANSI Clase 125*

Dimensions Determined by Motor, *Dimensiones Determinadas por el Motor*

Motor Frame, *Armazón del Motor*	A	AB Max., *AB Máx.*	B	C	D	E	F	G	H	P. Max., *P. Máx.*
143JM	6½	5¼	6	11¼	3½	2¾	2	⅛	11/32	6⅝
145JM							2½			
182JM	8½	5⅞	6½	15	4½	3¾	2¼	3/16	13/32	7⅞
184JM							2¾			
213JM	10½	7⅜	8	18½	5¼	4¼	2¾	¼	13/32	9⅝
213TCZ										
215JM				20			3½			

Horsepowers, *Fuerzas*

Motor Frame, *Armazón del Motor*	HP @ 3500 RPM				HP @ 1750 RPM				Wt. (lbs.), *Peso (libras)*
	1 Phase, *Monofásicos*		3 Phase, *Trifásicos*		1 Phase, *Monofásicos*		3 Phase, *Trifásicos*		
	ODP	TEFC	ODP	TEFC	ODP	TEFC	ODP	TEFC	
143JM	¾, 1, 1½	¾, 1, 1½	¾, 1, 1½	¾, 1, 1½	½, ¾	½, ¾	½, ¾, 1	½, ¾, 1	41
145JM	2	2	2,3	2,3	1	1	1½, 2	1½, 2	57
182JM	3	3	5	3	3	–	3	3	77
184JM	5	3, 5	7½	5, 7½	3	–	5	5	97
213JM	7½	–	7½, 10	7½	–	–	–	–	133
213TCZ	–	7½	–	7½	–	–	–	–	133
215JM	10	7½, 10	7½, 10, 15	7½, 10, 15	–	–	–	–	154

NOTES:

1. Pumps will be shipped with top vertical discharge as standard. For other orientations, remove casing bolts, rotate to desired position, replace and tighten bolts to 37 lb. – ft.
2. Dimensions are in inches.
3. Motor dimensions may vary with motor manufacturer.
4. Not to be used for construction purposes.

NOTAS:

1. Las bombas se transportarán con la descarga vertical superior como estándar. Para otras orientaciones, retirar los tornillos de la carcasa, rotar a la posición deseada, reemplazar y apretar los tornillos a 37 libras – pies.

2. Las dimensiones son en pulgadas.

3. Las dimensiones del motor pueden que varíen con los fabricantes.

4. No debe usarse para propósitos de construcción.

ITT	PumpSmart PS200 Drive Dimensions and Ratings Frame R2-NEMA1/IP21	**PUMP**SMART

PumpSmart PS200 Pump and Motor Control System

The PumpSmart PS200 is a pump and motor control system that provides integral starting, right-sizing, pump protection and process control for all pumping applications. The PumpSmart PS200 is based upon the ABB ACS800 variable frequency drive platform. PumpSmart Control Solutions has worked with ABB to incorporate proprietary pump protection, process control and configuration algorithms into the drive to make it more suitable for pumping applications

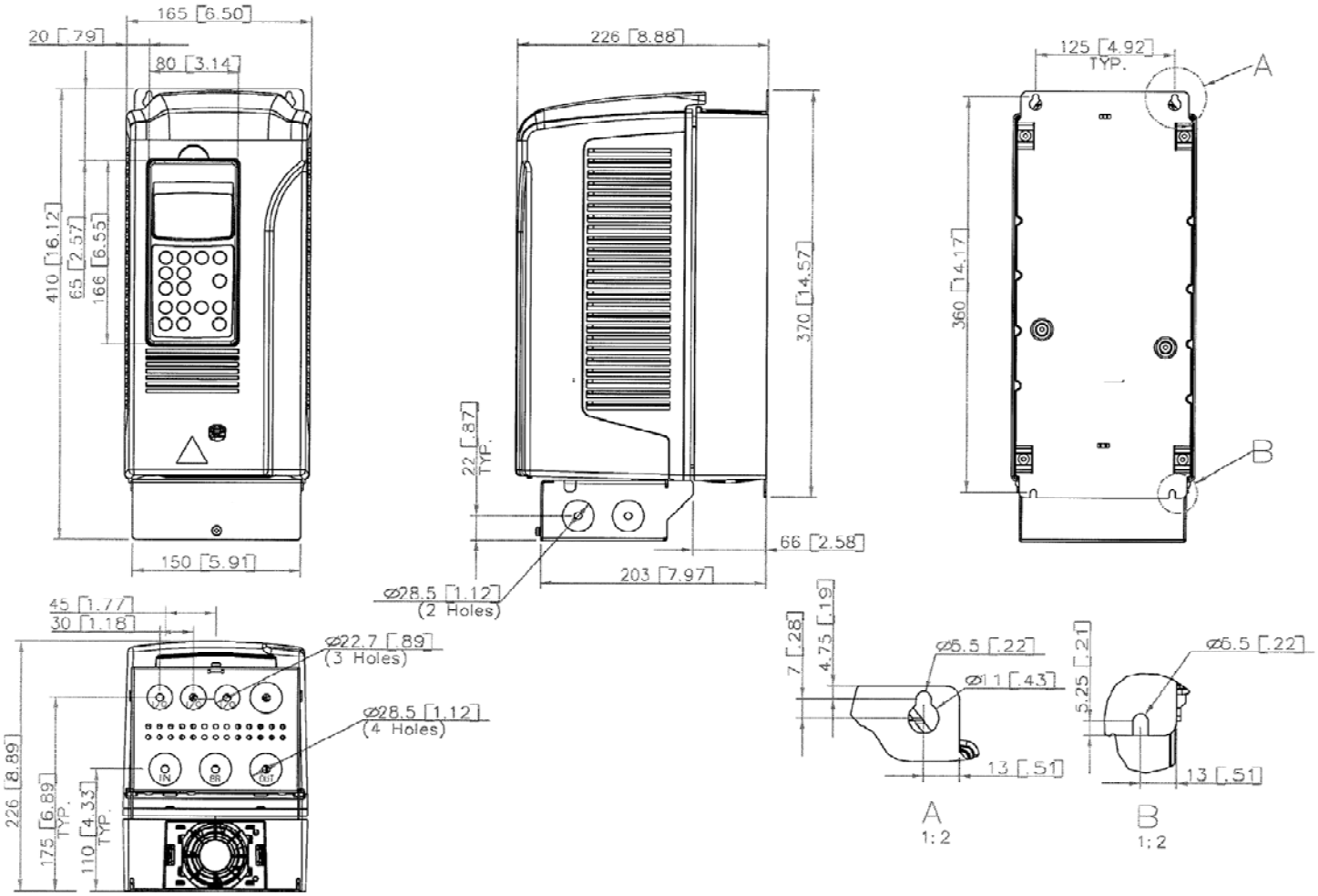

Drive Dimensions

Frame	Height mm [inches]	Width mm [inches]	Depth mm [inches]	Weight kg [lbm]
R2	410 [16.12]	165 [6.5]	226 [8.89]	9 [20]

*Dimensions not for construction

Copyright 2006 ITT Corp. No reproduction without permission	Drawing is not to scale Dimensions in mm(inches)	ISSUE:	Drawn: JCS 5-22-06 Checked: AES 5-22-06	Drawing A08776A	Revision 0	Sheet 1 of 3

ITT	PumpSmart PS200 Drive Dimensions and Ratings Frame R2-NEMA1/IP21	PUMPSMART

Drive Ratings

ITT P/N	Input Voltage VAC	Power P_N[1]		Nominal Current I_{2N}[2] Amps IEC/NEMA	Heat Dissipation		Air Flow		Frame	Enclosure Rating	Recommended Main Fuses		
		KW	HP		Watts	BTU/hr	M^3/hr	CFM			IEC269gG (A)	UL class T (A)	Bussmann Type
A08098A01	230	1.5	2	7.7/8.1	103	350	36	21	R2	NEMA 1 IP21	10	10	JJS-10
A08098A02	230	2.2	3	10.2/11	120	410					16	15	JJS-15
A08100A01	380*/460	2.2	3	5.6/6.2	141	480					10	10	JJS-10
A08100A02	380*/460	3	5	7.7/8.1	161	550					10	10	JJS-10
A08100A03	380*/460	4	7.5	10/11	202	690					16	15	JJS-15
A08100A04	380*/460	5.5	10	12/14	252	860					16	20	JJS-20

[1] P_N - Nominal Power Rating at listed voltage rating for variable torque loads
[2] I_{2N} - Continuous base current with 10% overload for 1 min / 5 minutes
* KW rating applies to drives with 380VAC input voltage

Power Cabling Schematic

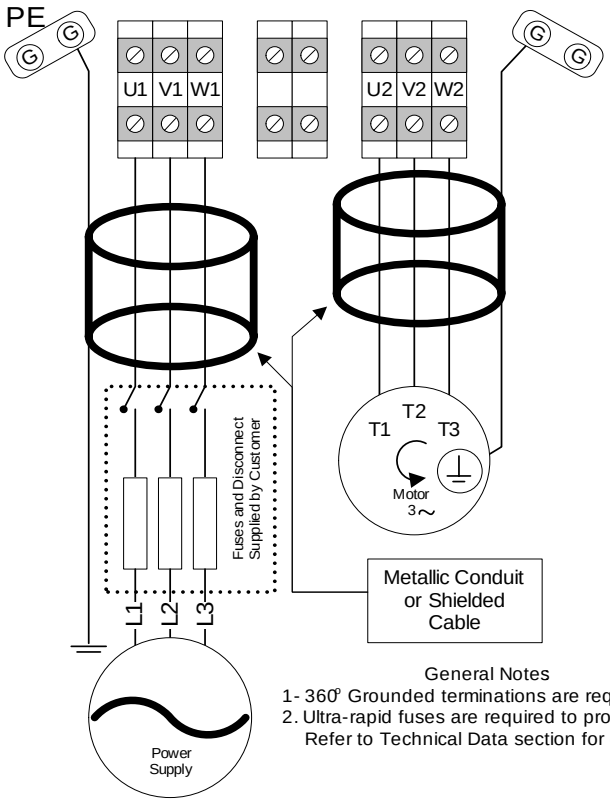

General Notes
1- 360° Grounded terminations are required
2. Ultra-rapid fuses are required to protect drive
Refer to Technical Data section for details

Frame Size	U1/V1/W 1 - U2/V2/W2 R+,R- Terminals				Earthing PE Terminal			
	Max. Wire Size		Torque		Max. Wire Size		Torque	
	mm^2	AWG	Nm	Lb-ft	mm^2	AWG	Nm	Lb-ft
R2	16 *	6 *	1.2-1.5	.9-1.1	10	8	1.5	1.1

* 6 AWG(16 mm^2) rigid solid cable, 8 AWG(10 mm^2) flexible stranded cable

Copyright 2006 ITT Corp. No reproduction without permission	Drawing is not to scale Dimensions in mm (inches)	Issue:	Drawn: JCS 5-6-06 Checked: AES 5-6-06	Drawing A08776A	Revision 0	Sheet 2 of 3

PumpSmart® PS200

Drive Hardware: ABB ACS800 -6 Pulse PWM

CERTIFICATIONS

600 VAC and Below
UL Listed — CSA Certified
Canadian UL Listed — CE Marked

INPUT POWER

Voltage…… 208...690 VAC 3 Phase ±10%
Overload…… 110% for 1 min/5 min, 140-150% for 10 sec at startup
Frequency…… 48...63Hz

Fundamental Power Factor ($COS\Phi_1$)…… $COS\Phi_1$ = 0.98 (fundamental)
$COS\Phi_1$ = 0.93...95 (total)
Efficiency…… 98% (at nominal power)

MOTOR CONNECTION

Voltage…… 0..V_{1in}/V_{3in}

Frequency…… 0...300 Hz
0...120 Hz with dV/dT Filters

Motor Control…… ABB Direct Torque Control Software
Speed Control…… Static Accuracy:10% of Motor Slip
Dynamic Accuracy: 0.3-0.4% second with 100% Torque Step

ENVIRONMENTAL LIMITS

Enclosures…… NEMA 1/IP21
NEMA 12/IP54

Temperature…… 5...104° F(-15 to 40°C) Standard
104..122° F (40-50 C) with de-rating (1%/1 C)

Humidity…… 5...95% Relative Humidity

Altitude…… 0...3300 Ft (0...1000M) Standard
3300..13,123Ft (1000..4000M) with de-rating (1%/100M)

Vibration…… Max. 1 mm (0.04 in.) 5-13.2 HZ
Max. 7 m/s^2 (23 ft/s^2) 13.2 – 100 HZ, Sinusoidal

Shock, Free Fall …… Not Allowed

STANDARD INPUT/OUTPUT

2 Current Analog Inputs…… 4...20mA
100Ω Input Resistance
11 bit resolution

1 Voltage Analog Input…… 2-10 VDC
200Ω Input Resistance
11 bit resolution
Galvanically isolated as a group

2 Current Analog Output…… 4...20mA
700Ω Max load impedance
10 bit resolution
Galvanically isolated as a group

Digital Inputs (7)…… 2 Wire Start/Stop
Hand-off Auto (HOA)
3-Wire Start/Stop
Setpoint 1-2
Speed Override
Specific Gravity
Secondary Protect A/B
Digital Reset
E Stop/Permissive
Motor Thermistor
24 VDC Input Voltage
1 mS filtering time

Relay Outputs (3) *Configurable*…… Form-C Switchover Contact
24 VDC or 250 VAC
2A max continuous current

Reference Voltage Output…… 10 VDC ± 0.5%
10mA max current

Auxiliary Voltage Output… 24 VDC ±10%
250 mA max current output

DRIVE PROTECTION

Keypad Failure	Over Current
Earth Fault	Under Voltage
Over Voltage	Over Temperature (Motor)
Over Temperature (VFD)	Over Torque
Phase Loss	Motor Stall

PUMP PROTECTION

Loss of Suction/Dry Run	General Condition
Low Flow	Sleep Function
Run-out Flow	Sensor Failure
Shut-off/Dead Head	Safe Speed Operation
Critical Speed Lockout	

FEATURES:

Smartflow	Multipump (Synchronous Control)
Smartcontrol (PID Torque)	Multipump (Backup)
Cavitation Control	System Curve Compensation
Automatic Fault Reset	Pump Cleaning Sequence

FIELDBUS

Communication Modules…… Modbus, Profibus DP
Ethernet, DeviceNet
ControlNet

Certified for Construction Purposes only when signed

Date……

Customer Name……

Goulds S/N……

Customer P.O #……

Item No……

Copyright 2006 ITT Corp.
No reproduction without permission

HAYWARD®

FLOW CONTROL

BYV Series Butterfly Valve Product Guide

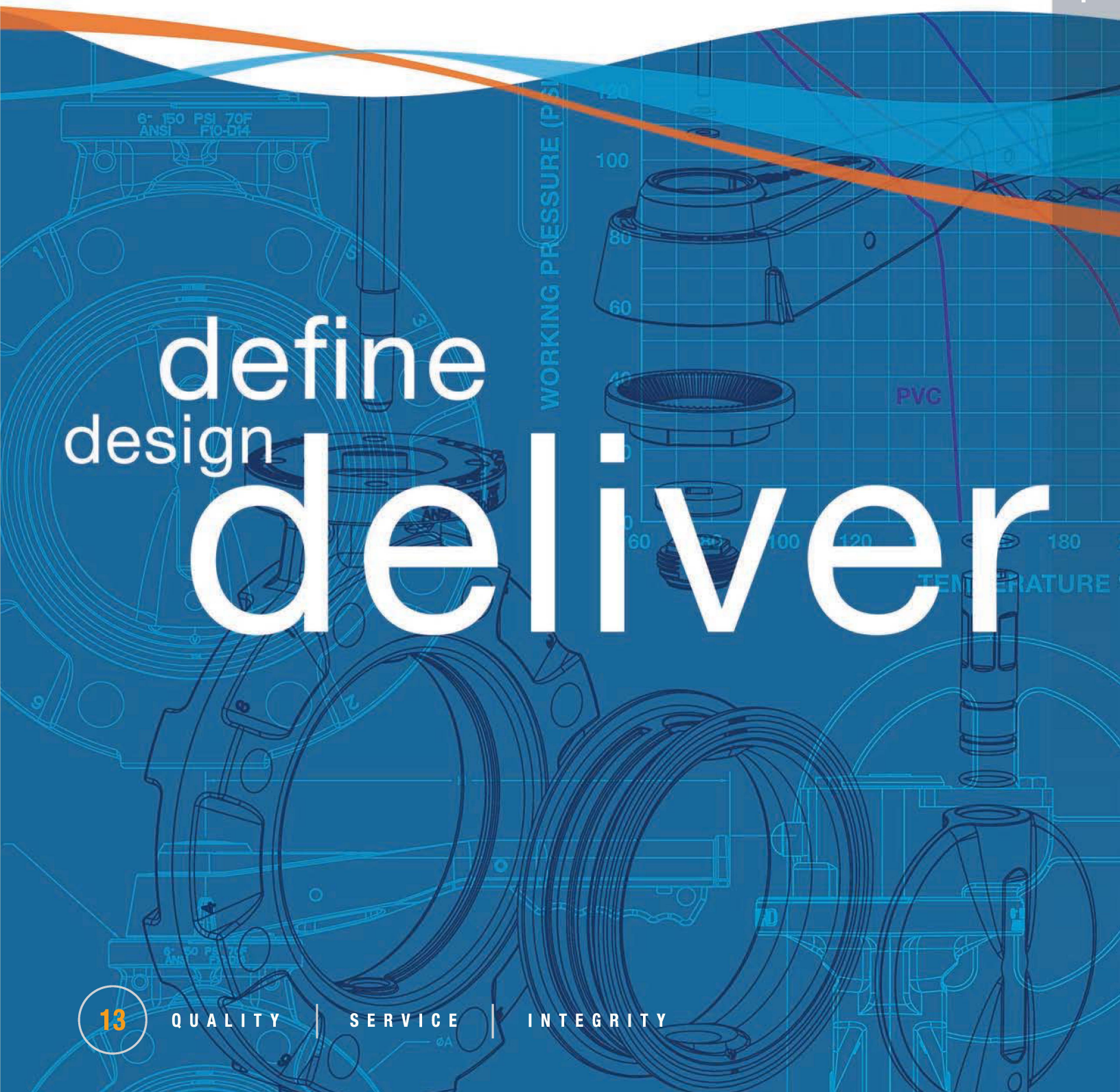

define
design
deliver

BYV Series Butterfly Valve

PVC, CPVC AND GFPP

The Revolutionary and patent-pending BYV Series Butterfly Valve from Hayward features the most advanced thermoplastic design and construction in the industry today.

Available in multiple thermoplastic materials from 2″ through 12″, the BYV has an extremely robust body construction while lighter weight than a metal equivalent. The revolutionary hand lever design features a 72 spline interlock mechanism allowing for 19 stopping positions every 5 degrees. Additionally, the hand lever material incorporates a UV inhibitor for enhanced performance in outdoor applications. The BYV features reinforced lug holes and can be ordered with overmolded 316 stainless steel lugs for dead end service needs.

Designed for global use, the BYV is available in ANSI and DIN/EN flange patterns with a pressure rating of 150 PSI / 10 Bar across all sizes and materials. Finally, the BYV Series is Made by Hayward in the USA!

KEY FEATURES, BENEFITS AND ADVANTAGES

- One Piece Body and Disc in PVC, CPVC and GFPP Materials
- Revolutionary Hand Lever with 19 Lockable Stop Positions and 360° Interlock
- External Disc Position and Flow Indication
- Hydro-dynamic Centric Disc Design for Increased Flow Performance
- Over-Sized Liner Face Maximizes Surface Contact with Flanges
- EPDM, Viton® or Nitrile Liners
- 1-Piece 316 Stainless Steel Stem with Threaded Retaining Gland
- Stem Bearing and Seal Retainer for Absolute Stem Positioning and Sealing
- ISO 5211 Top Flange and Stem Drive
- All Sizes Meet ANSI B16.10 / ISO 5752 Narrow Face-to-Face Dimensions
- Pressure Rated at 150 PSI / 10 Bar in All Sizes @ 70°F Non-Shock

EXPLODED VIEW

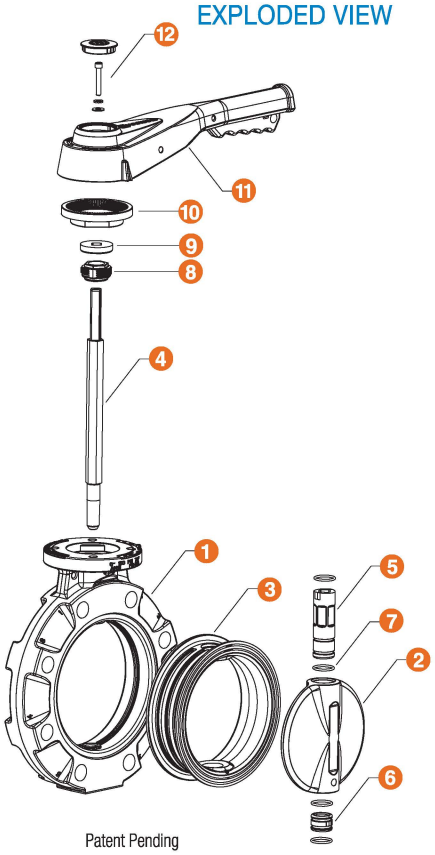

Patent Pending

OPTIONS

- Over-Molded or Field Mountable 316 Stainless Steel Lugs
- Gear Operators
- Complete Range of Pneumatic or Electric Actuators
- Stem Extensions
- 2″ Square Operating Nut
- Chain Operator for Gear Box

TYPICAL APPLICATIONS

- Water and Wastewater Treatment
- Aquatic and Animal Life Support Systems
- Chemical Processing and Handling
- Marine and Corrosive Environments
- Mining
- Metal Plating and Surface Finishing
- Landfills / Environmental Infrastructure
- Water / Theme Parks

MATERIALS

- PVC per ASTM D1784 Cell Class 12454
- CPVC per ASTM D1784 Cell Class 23447
- GFPP per ASTM D4101 Cell Class 85580
- EPDM, Viton® and Nitrile Liners

Viton® is a registered trademark of DuPont

Engineered Hand Lever Design for Enhanced Strength and UV Performance

Ergonomic Grip and Lockouts

72-Spline Interlocking Throttle Plate with 19 Locking Positions

1-pc Stem with Threaded Retaining Gland for Positive Stem Retention

High Visibility Disc Position and Flow Rate Indication

ISO 5211 Top Flange and Stem Drive for Ease of Actuation

Molded-In Hang Tag Holes

Robust 1-Piece Valve Body Construction in PVC, CPVC or GFPP Materials

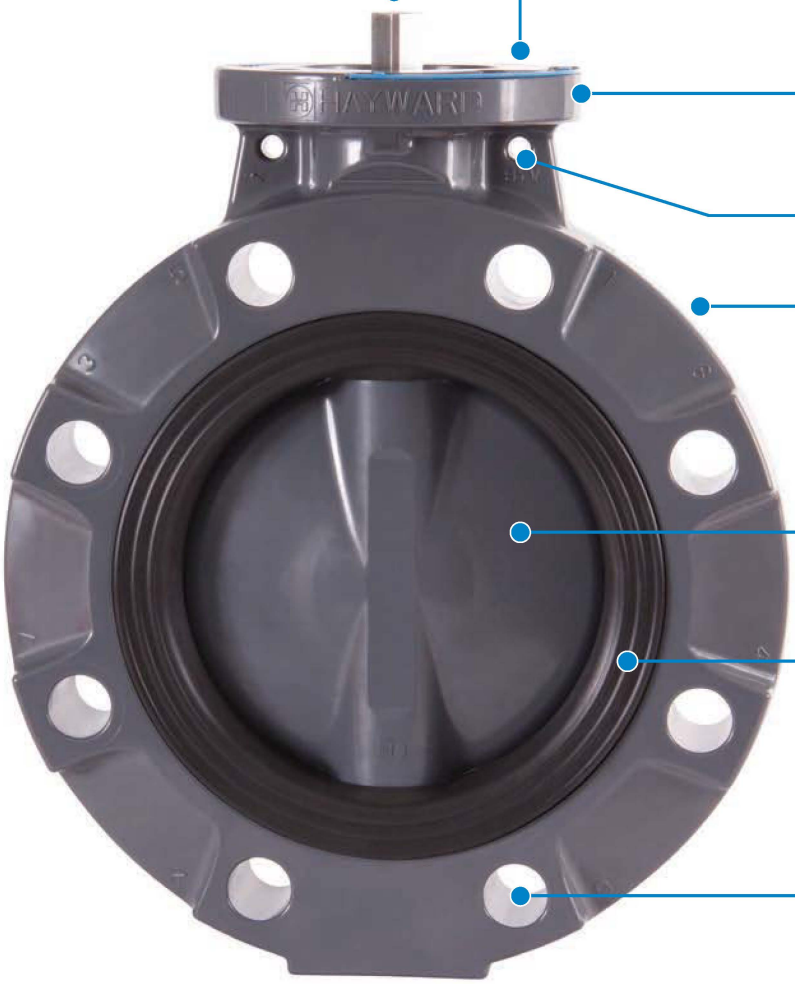

Hydro-dynamic Disc for Increased Flow Performance

Over-sized Liner Face Maximizes Flange Surface Contact

Reinforced Lug Holes Standard. Overmolded or Field Mounted 316 Stainless Steel Lugs Available

BYV Series Key Features and Advantages

Engineered Hand Lever for Enhanced Strength

- Ergonomic grip for ease of use
- Form fitting under grip for all hand sizes
- Lockout and tag-out holes molded into grip
- Made from GFPP with UV Inhibitor for superior outdoor performance
- Exceeds industry standards for strength requirements

19 Position Throttle Plate with 72 Interlocking Splines

- Made from Ultem® material for superior strength, temperature and corrosion resistance
- Provides locking positions every 5 degrees
- Insures absolute control and positioning of disc
- Easy operation with a smooth drive

High Visibility Disc and Flow Indicators

- Allows for exact positioning of the disc to meet flow requirements
- Shows degrees Open and Cv percentage
- High contrast permanent markings
- Made from PP material

Overmolded or Field Mountable Lug Option

- Threaded lugs made from 316 Stainless Steel
- Full width of the valve body for maximum engagement with bolt threads
- Allows for dead end service (Hayward recommends the use of a downstream flange)
- Does not require a different valve body or change of body materials to support threaded lugs

Hydro-dynamic Disc Design

- Contoured shape for increased flow performance and high Cv
- Minimizes turbulence due to reduction of flow
- Allows for maximum flow through valve port
- Centric seat design for bubble tight seal
- One Piece Stem with upper bearing seal and lower seal carrier

BYV Series Butterfly Valve
TECHNICAL INFORMATION

PARTS LIST / 2D DRAWINGS

1. Body
2. Disc
3. Liner
4. Stem
5. Upper Stem Bearings
6. Seal Retainer
7. O-Rings (4)
8. Threaded Retaining Gland
9. Weather Seal
10. Splined Throttle Plate (Ultem®)
11. Hand Lever Assembly
12. Bezel, Washers, Socket Head Cap Screw

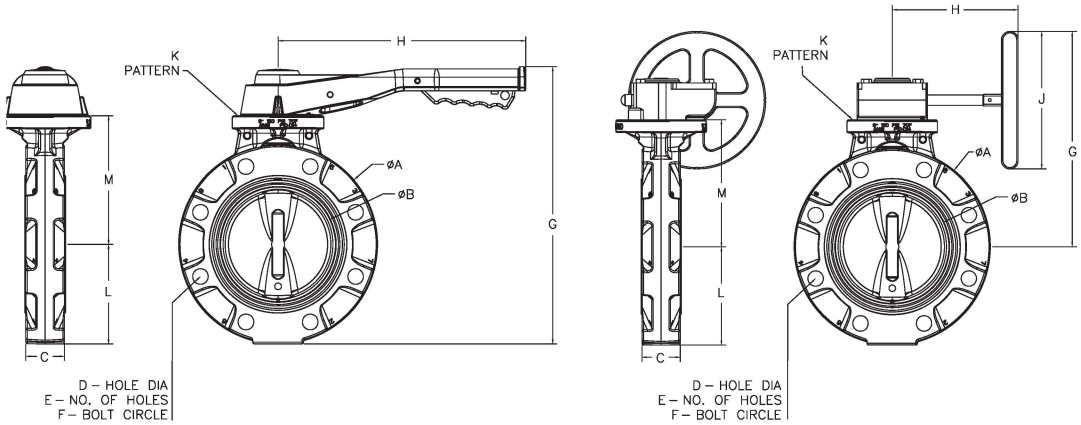

DIMENSIONS – INCHES / MILLIMETERS

SIZE	A	B	C (1)	D, ANSI (2)	D, DIN (3)	E	F, ANSI (2)	F, DIN (3)	G		H		J	K (4)	L	M	WEIGHT w LEVER	WEIGHT w GEAR
inches / DN	in / mm	in / mm	in / mm	in / mm	in / mm	ANSI / DIN	in / mm	in / mm	in / mm	in / mm	in / mm	in / mm	in / mm		in / mm	in / mm	lbs / Kg	lbs / Kg
2 / 50	6.12 / 155	2.03 / 52	1.69 / 43	0.75 / 19	0.71 / 18	4 / 4	4.75 / 121	4.92 / 125	7.53 / 191	6.25 / 159	4.75 / 121	10.5 / 267	5 / 125	F07-D11	3.17 / 81	3.97 / 101	4.0 / 1.8	5.8 / 2.6
2.5 / 65	7.25 / 184	2.50 / 64	1.81 / 46	0.75 / 19	0.71 / 18	4 / 4	5.50 / 140	5.71 / 145	7.96 / 202	6.67 / 169	4.75 / 121	10.5 / 267	5 / 125	F07-D11	3.63 / 92	4.40 / 112	4.9 / 2.2	6.7 / 3.0
3 / 80	7.75 / 197	3.25 / 83	1.81 / 46	0.75 / 19	0.71 / 18	4 / 8	6.00 / 152	6.30 / 160	8.31 / 211	7.00 / 178	4.75 / 121	10.5 / 267	5 / 125	F07-D11	3.88 / 99	4.75 / 121	5.2 / 2.4	7.0 / 3.2
4 / 100	9.13 / 232	4.12 / 105	2.06 / 52	0.75 / 19	0.71 / 18	8 / 8	7.50 / 191	7.09 / 180	9.29 / 236	8.00 / 203	7.28 / 185	12.00 / 305	5 / 125	F07-D14	4.57 / 116	5.69 / 145	7.7 / 3.5	11.1 / 5
6 / 150	11.25 / 286	5.98 / 152	2.19 / 56	0.88 / 22	0.87 / 22	8 / 8	9.50 / 241	9.45 / 240	12.35 / 314	10.00 / 254	7.75 / 197	14.00 / 356	8 / 200	F10-D14	5.63 / 143	7.25 / 184	12.7 / 5.8	16.2 / 7.4
8 / 200	13.75 / 349	7.75 / 197	2.38 / 60	0.88 / 22	0.87 / 22	8 / 8	11.75 / 298	11.61 / 295	13.48 / 342	11.18 / 284	7.75 / 197	16.00 / 406	8 / 200	F10-D17	6.88 / 175	8.38 / 213	18.5 / 8.4	21.9 / 10.0
10 / 250	16.13 / 410	9.63 / 245	2.69 / 68	1.00 / 25	0.87 / 22	12 / 12	14.25 / 362	13.78 / 350	16.37 / 416	N/A	9.00 / 229	N/A	8 / 200	F12-V28	8.06 / 205	10.88 / 276	N/A	34.2 / 15.5
12 / 300	19.13 / 486	11.37 / 289	3.06 / 78	1.00 / 25	0.87 / 22	12 / 12	17.00 / 432	15.75 / 400	17.87 / 454	N/A	9.00 / 229	N/A	8 / 200	F12-V36	9.56 / 243	12.38 / 314	N/A	50.4 / 22.9

1) Dimension per ASME B16.10 Class 150, Steel, Narrow
2) ANSI dimension per ASME B16.5, Class 150
3) Dimension per DIN 2501, PN10
4) ISO 5211 Flange and Drive

CV VALUES

SIZE in / DN	FULL OPEN POSITION
2 / 50	125
2-1/2 / 65	190
3 / 80	280
4 / 100	600
6 / 150	1300
8 / 200	2500
10 / 250	4700
12 / 300	7100

PRESSURE LOSS CALCULATION FORMULA

$$\Delta P = \left[\frac{Q}{Cv}\right]^2$$

ΔP = Pressure Drop
Q = Flow in GPM
Cv = Flow Coefficient

PRESSURE / TEMPERATURE CHART

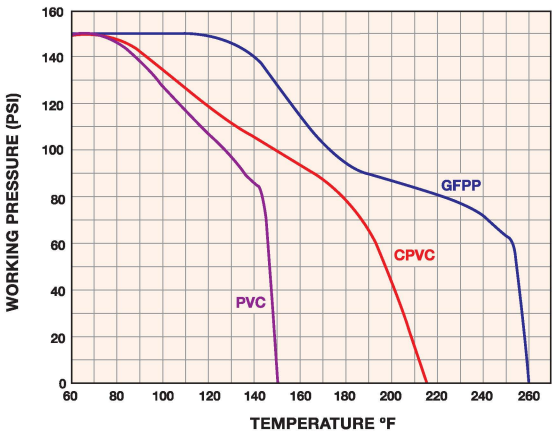

Ultem® is a registered trademark of SABIC

SAMPLE SPECIFICATION

All thermoplastic wafer-style butterfly valves shall be manufactured from PVC Type 1, Grade 1 (ASTM D1784, Cell Classification 12454), CPVC (ASTM D1784, Cell Classification 23447) or glass filled Polypropylene (ASTM D4101, Cell Classification 85580). All valve bodies shall contain integral top mounting flange with dimensions and bolt circles conforming to ISO 5211. Bodies shall contain fully-supported flange bolt holes, be one piece construction and meet ANSI B16.10 narrow face-to-face dimensions in all sizes. If LUGGED butterfly valves are required, lugs shall be over-molded, 316 stainless steel and be the full width of the body. Liners shall be EPDM, Viton® or Nitrile. Liner shall be FULL BOOT design, and shall be retained in the body via rib and groove engagement. Liner shall serve as primary disc seal and face seals for mating flanges. Secondary upper bearing and lower seal retainer o-ring seals to be EPDM or FPM. Stem shall be 316 stainless steel, non-wetted and provide full engagement over length of disc. Stem shall have position retention design.

Lever handle shall be trigger-style with 360° interlocking splines allowing the handle to position the disc in 5° increments. Mounting of stop plate for lever handle shall be non-invasive to the valve body and shall not incorporate self tapping screws or other fasteners that connect directly to the valve body. Trigger shall contain hole for padlock, as well as slot for cable tie, to lockout valve. Lever handle material to be 30% glass filled Polypropylene with UV Inhibitor.

Sizes 2″ through 8″ will be lever-operated as standard, and sizes 10″ and 12″ will be gear-operated as standard. Gear operators will be available for all sizes of valves as needed. All sizes of butterfly valves (2″ through 12″) shall be pressure-rated for 150 PSI at 70°F non-shock.

All butterfly valves shall carry a two-year warranty, and shall be manufactured by Hayward Flow Control products in the USA.

PART NUMBER MATRIX

A		*B*		*C*		*M*		*E*		*F*		*G*		*H*		*I*	
BYV		1		1		040A		0		E		L		I		00	
VALVE SERIES	SUFFIX A	BODY MATERIAL	SUFFIX B	DISC MATERIAL	SUFFIX C	SIZE	SUFFIX M	STEM MATERIAL	SUFFIX E	LINER MATERIAL	SUFFIX F	METHOD OF OPERATION	SUFFIX G	LUG OPTION	SUFFIX H	OPTIONS	SUFFIX I
BYV Butterfly	BYV	PVC	1	PVC	1	2″	020A	316	0	Viton®	V	Lever	L	none	0	none	00
		CPVC	2	CPVC	2	2-1/2″	025A			EPDM	E	Gear	G	316SS	I	PER PO	##
		GFPP	4	GFPP	4	3″	030A			Nitrile	N	Bare Stem	K				
						4″	040A										
						6″	060A										
						8″	080A										
						10″	100A										
						12″	120A										
						DN50	050M										
						DN65	065M										
						DN80	080M										
						DN100	100M										
						DN150	150M										
						DN200	200M										
						DN250	250M										
						DN300	300M										

Inch Size valves have an ANSI flange pattern

Metric Size valves have a DIN flange pattern

Please see table of dimensions for further data.

Hayward is a registered trademark
of Hayward Industries, Inc.
© 2013 Hayward Industries, Inc.

Contact Hayward Flow Control with questions: 1-888-429-4635 • Fax: 1-888-778-8410 • One Hayward Industrial Drive • Clemmons, NC 27012 • USA
Visit us at: www.haywardflowcontrol.com • Email: hflow@haywardnet.com

Terms & Conditions

General Provisions

WARRANTY - Company warrants title to the product(s) and, except as noted with respect to items not of Company's manufacturer, also warrants the product(s) on date of shipment to Purchaser, to be of the kind and quality described herein, and free of defects in workmanship and material. THIS WARRANTY IS EXPRESSLY IN LIEU OF ALL OTHER WARRANTIES, INCLUDING BUT NOT LIMITED TO IMPLIED WARRANTIES OF MERCHANTABILITY AND FITNESS, AND CONSTITUTES THE ONLY WARRANTY OF COMPANY WITH RESPECT TO THE PRODUCT(S).

If within one year from date of initial operation, but not more than eighteen months from date of shipment by Company of any item of product(s), Purchaser discovers that such item was not as warranted above and promptly notifies Company in writing thereof, Company shall remedy such nonconformance by, at Company's option, adjustment or repair or replacement of the item and any affected part of the product(s). Purchaser shall assume all responsibility and expense for removal, reinstallation, and freight in connection with the foregoing remedies. The same obligations and conditions shall extend to replacement parts furnished by Company hereunder. Company shall have the right of disposal of parts replaced by it. Purchaser agrees to notify Company, in writing, of any apparent defects in design, material or workmanship, prior to performing any corrective action back chargeable to the Company. Purchaser shall provide a detailed estimate of the material, labor costs associated with proposed remedy for expeditious review and approval by the Company.

ANY SEPARATELY LISTED ITEM OF THE PRODUCT(S) WHICH IS NOT MANUFACTURED BY THE COMPANY IS NOT WARRANTED BY COMPANY and shall be covered only by the express warranty, if any, of the manufacturer thereof.

THIS STATES PURCHASER'S EXCLUSIVE REMEDY AGAINST COMPANY AND ITS SUPPLIERS RELATING TO THE PRODUCT(S) WHETHER IN CONTRACT OR IN TORT OR UNDER ANY OTHER LEGAL THEORY, AND WHETHER ARISING OUT OF WARRANTIES, REPRESENTATIONS, INSTRUCTIONS, INSTALLATIONS OR DEFECTS FROM ANY CAUSE. Company and its suppliers shall have no obligation as to any product which has been improperly stored or handled, or which has not been operated or maintained according to instructions in Company or supplier furnished manuals.

PATENTS - Company shall pay costs and damages finally awarded in any suit against Purchaser or its vendees to the extent based upon a finding that the design or construction of the product(s) as furnished infringes a United States patent (except infringement occurring as a result of incorporating a design or modification at Purchaser's request) provided that Purchaser promptly notifies Company of any change of such infringement, and Company is given the right at its expense to settle such charge and to defend or control the defense of any suit based upon such charge. THIS PARAGRAPH SETS FORTH COMPANY'S EXCLUSIVE LIABILITY WITH RESPECT TO PATENTS.

BUYER DATA - Timely performance is contingent upon the Purchaser supplying to the Company, when needed, all required technical information, including drawing approval, and all required commercial documentation.

NUCLEAR - Purchaser represents and warrants that the product(s) covered by this contract shall not be used in or in connection with a nuclear facility or application.

NONCANCELLATION - Purchaser may not cancel or terminate for convenience, or direct suspension of manufacture, except on mutually acceptable terms.

DELAYS - If Company suffers delay in performance due to any cause beyond its control, including but not limited to act of God, war, act or failure to act of government, act or omission of Purchaser, fire flood, strike or labor troubles, sabotage, or delay in obtaining from others suitable services, materials, components, equipment or transportation, the time of performance shall be extended a period of time equal to the period of the delay and its consequences. Company will give to Purchaser notice in writing within a reasonable time after Company becomes aware of any such delay.

STORAGE - Any item of the product(s) on which manufacture or shipment is delayed by causes within Purchaser's control, or by causes which affect Purchaser's ability to receive the product(s), may be placed in storage by Company for Purchaser's account and risk.

SHIPMENT - The term "shipment" means delivery to the initial carrier in accordance with the delivery terms of this order. Company may make partial shipments. Company shall select method of transportation and route, unless terms are f.o.b. point of shipment and Purchaser specifies the method and route and is to pay the freight costs in addition to the price. When terms are f.o.b. destination or freight allowed to destination, "destination" means common carrier delivery point (within the continental United States, excluding Alaska) nearest the destination. For movement outside the United States, Company shall arrange for inland carriage to port of exit and shall cooperate with Purchaser's agents in making necessary arrangements for overseas carriage and preparing necessary documents.

SPECIAL SHIPPING DEVICES - On shipments to a destination in the continental United States or Canada, Company has the right to add to the invoice, as a separate item, the value of any special shipping device (barrel, reel, tarpaulin, cradle, crib and the like) used to contain or protect the product(s) invoiced, while in transit. Full credit will be given on the return to Company of the device in a reusable condition, f.o.b. destination, freight prepaid.

TITLE AND INSURANCE - Title to the product(s) and risk of loss or damage shall pass to Purchaser at the f.o.b. point, except that a security interest in the product(s) and proceeds and any replacement shall remain in Company, regardless of mode of attachment to realty or other property, until the full price has been paid in cash. Purchaser agrees to do all acts necessary to perfect and maintain said security interest, and to protect Company's interest by adequately insuring the product(s) against loss or damage from any external cause with Company named as insured or co-insured.

TERMS OF PAYMENT - Unless otherwise stated all payments shall be Net Thirty (30) Days and in United States dollars, and a pro rata payment shall become due as each shipment is made. If shipment is delayed by Purchaser, date of readiness for shipment shall be deemed to be date of shipment for payment purposes. If at any time in Company's judgment Purchaser may be or may become unable or unwilling to meet the terms specified, Company may require satisfactory assurances or full or partial payment as a condition to commencing or continuing manufacture or making shipment; and may, if shipment has been made, recover the product(s) from the carrier, pending receipt of such assurances.

TAXES - Any applicable duties or sales, use, excise, value added or similar taxes will be added to the price and invoiced separately (unless acceptable exemption certificate is furnished).

LIMITATION OF LIABILITY - Neither Company nor its suppliers shall be liable, whether in contract or in tort or under any other legal theory, for loss of use, revenue or profit, or for cost of capital or of substitute use or performance, or for incidental, indirect, or special or consequential damages, or for any other loss or cost of similar type, or for claims by Purchaser for damages of Purchaser's customers. Likewise, Company shall not, under any circumstances, be liable for the fault, negligence, or wrongful acts of Purchaser or Purchaser's employees, or Purchaser's other contractors of suppliers.

IN NO EVENT SHALL COMPANY BE LIABLE IN EXCESS OF THE SALES PRICE OF THE PART(S) OR PRODUCT FOUND DEFECTIVE.

GENERAL - (a) Company will comply with all laws applicable to Company. Compliance with OSHA or similar federal, state or local laws during any operation or use of the product(s) is the sole responsibility of Purchaser. (b) The laws of the State of New York shall govern the validity, interpretation and enforcement of any contract of which these provisions are a part, without giving effect to any rules governing the conflict of laws. (c) This document and any other documents specifically referred to as being a part hereof, constitute the entire contract on the subject matter, and it shall not be modified except in writing signed by both parties. Unless otherwise specified, any reference to Purchaser's order is for identification only. Assignment may be made only with written consent of both parties.

ACCEPTANCE - The determination of compliance with performance guarantees will be based on results of factory tests under controlled conditions with calibrated instruments and tested per standards of the Hydraulic Institute.

INSPECTIONS/EXPEDITING - The Company wishes to clarify that it will have to restrict access to agreed upon reasonable times and only for the purpose of conducting those inspections agreed upon. We request 72 hours notice prior to each visit. We request notification prior to visits to our subcontractors.

PRICES - The prices stated herein will remain firm for the period up to the stated date of shipment providing the shipment is not delayed by the customer. If shipment is delayed by the customer beyond the shipment date quoted herein, the prices will be based on the prices in effect at time of shipment, including storage and material handling costs. In no event shall the adjusted price be less than the original order price, including change orders. Prices are F.O.B. Shipping Point, unless otherwise specified. When price includes transportation and other charges pertaining to the shipment of goods, any increase in transportation rates and other charges will be for the account of the Purchaser. There will be an extra charge for any test other than that which may be normally run by the Company, or for any test performed to suit the convenience of the Purchaser.

CONTROLLING PROVISIONS - These terms and conditions shall control with respect to any purchase order or sale of the Company's products. No waiver, alteration or modification of these terms and conditions whether on Purchaser's purchase order or otherwise shall be valid unless the waiver, alteration or modification is specifically accepted in writing and signed by an authorized representative of the Company.

If this transaction involves EXPORT, the following additional terms and conditions shall apply:

PACKING - Equipment will be packed, boxed or crated in accordance with the Company's standard commercial practice, for underdeck export shipment, unless otherwise agreed.

LETTER OF CREDIT - Unless otherwise specified in writing, payment shall be made by irrevocable letter of credit in form acceptable to Company, confirmed by a major USA bank, acceptable to the Company and providing for payment in full in United States dollars against presentation of United States inland shipping documents and invoices, such letter of credit to be established prior to Company's acceptance of the order. The letter of credit shall also provide that in the event Company is, for any reason beyond its control, prevented from making shipment from Company's factory or delivery at the port of embarkation, a certificate of manufacture of the whole or any part of the goods shall constitute delivery of such whole or any part of the goods and payment in full of any and all drafts drawn against the letter of credit for the goods so "delivered" shall be made upon presentation of such certificates of manufacture in lieu of United States inland shipping documents. In the event that Company is prevented by law, or otherwise, from making shipment from Company's factory or delivery at port of embarkation of the goods or any part thereof, on completion of manufacture, Company reserves the right to place the goods in storage for the Purchaser's account and risk. Any charges incurred in this connection will be for the account of the Purchaser at cost and will be payable upon demand.

COMPANY AS AGENT - If Company makes or arranges for ocean shipment, Company shall act as agent for the Purchaser and reserves the right to procure full insurance coverage, including war risk insurance, at the expense of the Purchaser. All expenses incurred in this connection will be payable upon demand to the Company. If Company as agent applies for or secures manufacturing, financing, exporting or other licenses required by the United States Government, or any department thereof, Company shall make such applications or secure such licenses solely as agent for the Purchaser, and assumes no responsibility therefore

Memo

PHARMER ENGINEERING
1998 W. Judith Lane
Boise, Idaho 83705
Phone (208) 433-1900
Fax (208) 433-1901
www.pharmereng.com

To: Zeke Johnson, RSCI

CC: Trent Dyksterhouse, RSCI
Monty Johnson, J.R. Simplot
Jonathan Witt, J.R. Simplot

From: Jeremy Aulbach, PE

Date: May 12, 2015

Re: Smoky Canyon Selenium Pilot Treatment System - PH I - HS-0001
Aeration Tank to Sand Filter Hydraulics

Zeke,

The hydraulics between the aeration tank and the sand filter at the Smoky Canyon Selenium Pilot Treatment System are inadequate to meet system design. The aeration tank design freeboard of 3 ft 8 inches cannot be maintained while the sand filter is operated within the operating headlosses of 12-48 inches.

Your construction and engineering team, along with support from J.R. Simplot operations staff, has performed exhaustive tests to identify any potential obstructions in the piping via flow tests, camera survey, and pressure gauge installation. The final test of the system with clean sand in the sand filter showed 28 inches of headloss through the sand filter, 4.0 psi on the recently installed pressure gauge 10' AFF, 245 gpm forward flow rate, and resulted in 10 inches of freeboard within the aeration tank.

It is expected that your design build team will provide a no cost change proposal to the owner to remedy the deficient hydraulics between the aeration tank and the sand filter. Please provide a written plan to the J.R. Simplot Company as soon as possible for review and approval prior to implementing the deficient hydraulics remedy.

Sincerely,

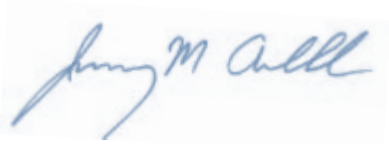

Jeremy Aulbach
Pharmer Engineering