J.R. SIMPLOT COMPANY

SMOKY CANYON MINE

NON-TIME-CRITICAL REMOVAL ACTION (NTCRA)

POLE CANYON OVERBURDEN DISPOSAL AREA (ODA)

AS-BUILT DRAWINGS

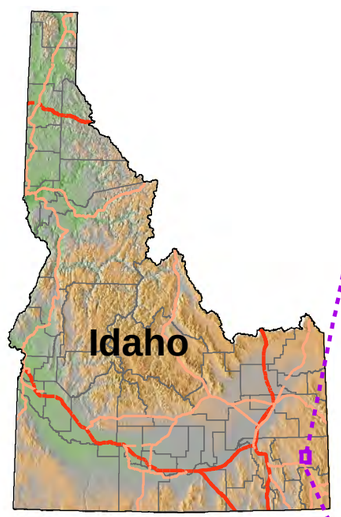

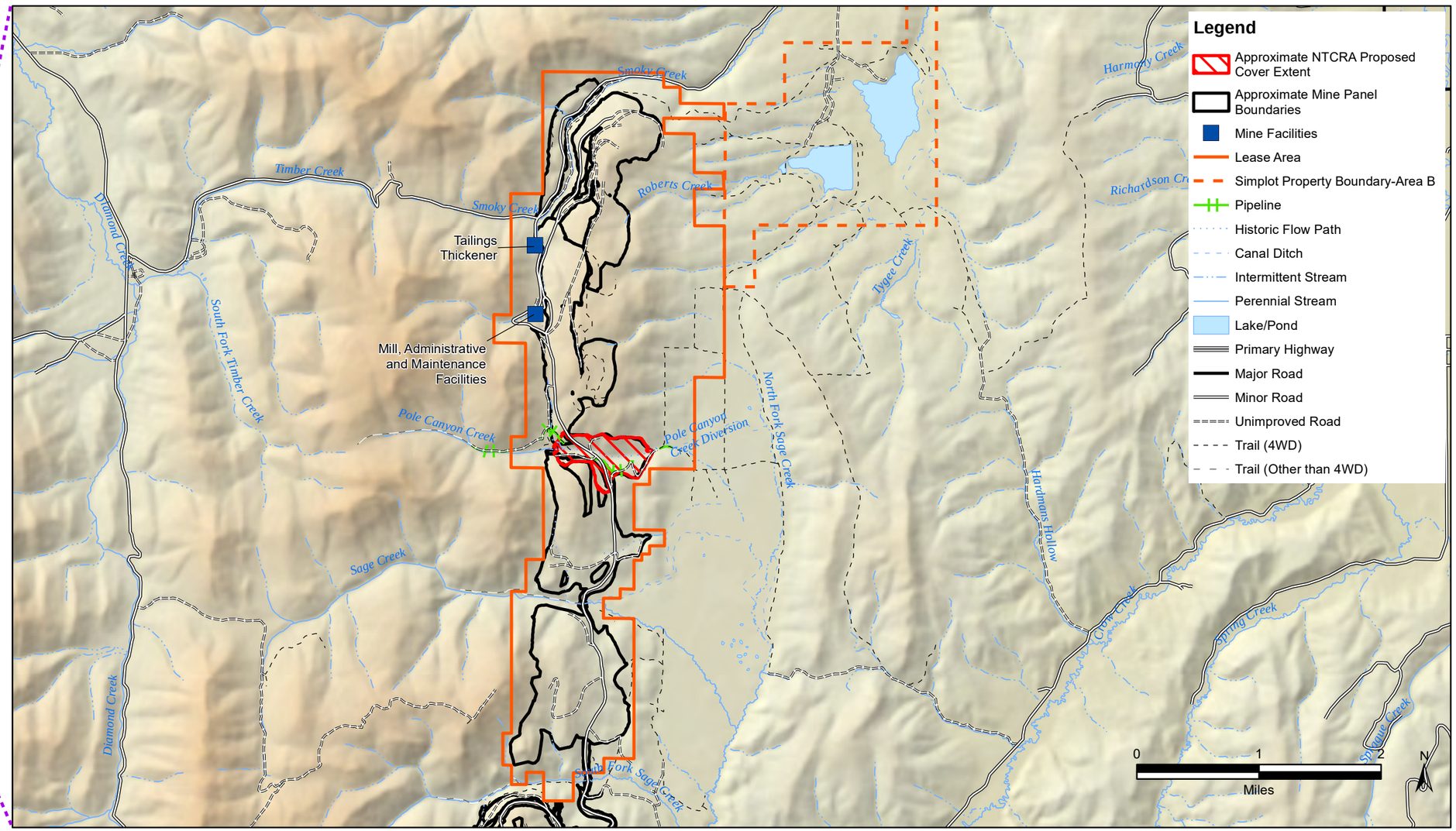

ORIGINAL SIGNED BY: BRIAN G. HANSEN

PROFESSIONAL ENGINEER REGISTERED STATE OF IDAHO BRIAN G. HANSEN

06/13/2017

NOT VALID UNLESS SIGNED

AS-BUILT DRAWINGS
(JUNE 2017)

Drawing
009-004-G1

DRAWING LIST

SHEET NO.	SHEET TITLE
009-004-G1	**PROJECT TITLE SHEET AND LOCATION MAP**
009-004-G2	**DRAWING LIST**
009-004-G2.1	CONSTRUCTION NOTES, LEGEND, AND ABBREVIATIONS
009-004-G2.2	**SURVEY NOTES AND COORDINATE SYSTEM INFORMATION**
009-004-G3	*GENERAL SITE PLAN*
009-004-G4	*PLAN OF POLE CANYON ODA EXISTING CONDITIONS*
009-004-G5	*GENERAL STORMWATER CONTROL PLAN - POLE CANYON ODA*
009-004-G5.1	*GENERAL STORMWATER CONTROL PLAN - DINWOODY BORROW AREA*
009-004-G6	*EROSION AND SEDIMENT CONTROL PLAN*
009-004-C1	**GRADING PLAN POLE CANYON ODA WEST AREA**
009-004-C2	**GRADING PLAN POLE CANYON ODA EAST AREA**
009-004-C3	**POLE CANYON ODA - EAST-WEST SECTION A**
009-004-C3.1	**POLE CANYON ODA - WEST-SIDE SECTION B**
009-004-C3.2	**POLE CANYON ODA - SOUTHWEST-SIDE SECTION C**
009-004-C4	**POLE CANYON ODA - EAST SIDE NORTH-SOUTH SECTION D**
009-004-C5	**TYPICAL SECTIONS AND DETAILS - CHERT/DINWOODY COVER SYSTEM**
009-004-C5.1	MISCELLANEOUS COVER SECTIONS AND DETAILS
009-004-C6	**UPPER EAST FACE RUNOFF DITCH PLAN AND PROFILE**
009-004-C6.1	**LOWER EAST FACE RUNOFF DITCH PLAN AND PROFILE**
009-004-C7	**EAST-SIDE RUNOFF DIVERSION DITCH PLAN**
009-004-C7.1	**EAST-SIDE RUNOFF DIVERSION DITCH PROFILE**
009-004-C7.2	**SOUTH CENTRAL RUNOFF DITCH/CHUTE PLAN AND PROFILE**
009-004-C7.3	**SOUTH EAST RUNOFF DITCH/CHUTE - PLAN AND PROFILE**
009-004-C8	**EAST-SIDE RUNOFF DITCH - SECTIONS AND PROFILES**
009-004-C9	**EAST-SIDE RUNOFF DIVERSION DITCH - SECTIONS AND DETAILS**
009-004-C10	EAST-SIDE RUNOFF DIVERSION DITCH AND OUTFALL SECTIONS
009-004-C11	**EAST ENERGY DISSIPATION STRUCTURE - PLAN AND SECTIONS**
009-004-C12	**EAST SEDIMENTATION BASIN - PLAN AND SECTIONS**
009-004-C13	**SOUTH CENTRAL SEDIMENTATION BASIN - PLAN AND SECTIONS**
009-004-C13.1	**WEST-SIDE SOUTH SEDIMENTATION BASIN - PLAN AND SECTIONS**

SHEET NO.	SHEET TITLE
009-004-C13.2	**SEDIMENTATION BASINS - SPILLWAYS AND LOW-LEVEL DISCHARGE PIPES - PLANS, SECTIONS, PROFILES, AND DETAILS**
009-004-C14	**SADDLE INFILTRATION BASIN - PLAN AND SECTIONS**
009-004-C15	**WEST-SIDE RUNOFF SYSTEM - TYPICAL SECTIONS AND DETAILS**
009-004-C15.1	**WEST-SIDE RUNOFF DITCH LOWER CULVERT - PLAN, PROFILE, AND DETAILS**
009-004-C15.2	**SOUTH RUNOFF DITCH AND CULVERT - PROFILE, SECTIONS, AND DETAILS**
009-004-C16	**WEST-SIDE UPPER RUNOFF DITCH PLAN AND PROFILE**
009-004-C16.1	**WEST-SIDE LOWER RUNOFF DITCH PLAN AND PROFILE**
009-004-C17	**NORTH DRAINAGE INLET STRUCTURE TO CULVERT UNDER ROAD - PLAN AND SECTIONS**
009-004-C18	**WEST ENERGY DISSIPATION STRUCTURE - PLAN AND SECTIONS**
009-004-C19	*ARTICULATED CONCRETE MAT ALTERNATIVE FOR SOUTH EAST-SIDE RUNOFF CHUTE*
009-004-C20	**NORTHWEST BASIN - PLAN**
009-004-C20.1	**NORTHWEST BASIN - SECTIONS**
009-004-C21	**NORTHWEST BASIN OUTLET AND SPILLWAY - SECTIONS AND DETAILS**
009-004-C22	**OUTFALL INTO EXISTING WEST INFILTRATION BASIN - PLANS, SECTIONS AND DETAILS**
009-004-C23	**OUTFALL AND PLAN WEST SEDIMENTATION BASIN - PROFILE AND SECTIONS**
009-004-C24	*DINWOODY BORROW AREA PLAN - EXISTING CONDITIONS*
009-004-C25	**DINWOODY BORROW AREA - REGRADING PLAN**
009-004-C25.1	**DINWOODY BORROW AREA - REGRADING SECTIONS AND RUN-ON DITCH DETAILS**
009-004-C26	**DINWOODY BORROW AREA SEDIMENTATION BASINS - PLANS, SECTIONS AND DETAILS**
009-004-C26.1	*DINWOODY BORROW AREA SEDIMENTATION BASINS - SPILLWAY DETAILS*
009-004-C27	EROSION CONTROL DETAILS - SILT FENCES
009-004-C28	EROSION CONTROL DETAILS - STRAW WATTLES AND BALES

REFERENCE DRAWINGS	
REF. 1	AS-BUILT DRAWINGS OF POLE CANYON DIVERSION PIPELINE (SUNRISE ENGINEERING)
REF. 2	AS-BUILT DRAWINGS OF POLE CANYON DIVERSION PIPELINE (BRIERLEY ASSOCIATES)
REF. 3	AS-BUILT DRAWINGS OF NORTH RUN-ON CHANNEL
REF. 4	AS-BUILT DRAWINGS OF INFILTRATION BASIN

NOTE:
1. BOLDED, UNDERLINED SHEET TITLES INDICATE DRAWINGS THAT HAVE BEEN REVISED TO AS-BUILT DRAWINGS. ALL DRAWINGS IN NORMAL TEXT (NOT GREY OR BOLDED/UNDERLINED) ARE THE SAME AS THE CONSTRUCTION PACKAGE.
2. DESIGN DRAWINGS WHICH DO NOT HAVE A CORRESPONDING AS-BUILT DRAWING ARE DEPICTED WITH GREY FONT AND ARE NOT INCLUDED IN THIS SET OF AS BUILT DRAWINGS.
3. AS-BUILT DRAWINGS OF POLE CANYON DIVERSION PIPELINE FROM SUNRISE ENGINEERING (REF. 1) SHOW ORIGINAL PORTION OF PIPELINE FROM STA 68+30 TO ITS EASTERN (DOWNSTREAM) TERMINUS. THE REBUILT PORTION OF THE PIPELINE, FROM STA 0+00 TO STA 68+30 IS SHOWN IN BRIERLEY ASSOCIATES AS-BUILT DRAWINGS (REF. 2).

REFERENCE	NO.	REVISIONS	BY	DATE

NO.	REVISIONS	BY	DATE
AB2	REVISED AS-BUILT	BGH	06/17
AB	AS-BUILT	BGH	01/17
3	ISSUE FOR BID AND CONSTRUCTION	BGH	01/16
2	ISSUE FOR FINAL REVIEW	BGH	08/14
1	ISSUE FOR 90% REVIEW	BGH	06/14
0	ISSUE FOR REVIEW	BGH	02/14

ORIGINAL SIGNED BY: BRIAN G. HANSEN
PROFESSIONAL ENGINEER REGISTERED 9074 STATE OF IDAHO BRIAN G. HANSEN
06/13/2017
NOT VALID UNLESS SIGNED

FORMATION ENVIRONMENTAL

DESIGNED BY:	JHR
DRAWN BY:	BAP
CHECKED BY:	BGH
APPROVED BY:	BGH
FILE NAME:	DwgG02_DwgLst.DWG

J.R. SIMPLOT COMPANY - SMOKY CANYON MINE
POLE CANYON ODA NTCRA

DRAWING LIST

DATE	JUNE 2017	DWG NO.	009-004-G2	REVISION	AB2

S:\GIS\ARCPRJ\2010109\PLT\POLECANYONNTCRA\PRSC_PLAN\GENDRAWINGS\DWGG02_DWGLST.MXD

ABBREVIATIONS

@	AT	L	LEFT
&	AND	LF	LINEAR FOOT
4WD	FOUR WHEEL DRIVE	MAX.	MAXIMUM
AB	ANCHOR BOLT	MDD	MAXIMUM DRY DENSITY
AC.	ACRE	MIN.	MINIMUM
ACM	ARTICULATED CONCRETE-BLOCK MAT	N	NORTHING
AMSL	ABOVE MEAN SEA LEVEL	NOM.	NOMINAL
APPROX.	APPROXIMATE	NTCRA	NON-TIME-CRITICAL REMOVAL ACTION
AVG.	AVERAGE	NW	NON-WOVEN
BMP	BEST MANAGEMENT PRACTICES	O.C.	ON CENTER
CF	CUBIC FEET	ODA	OVERBURDEN DISPOSAL AREA
CFS	CUBIC FEET PER SECOND	OZ/SY	OUNCES PER SQUARE YARD
CL	CENTERLINE	PREP.	PREPARED
CMP	CORRUGATED METAL PIPE	PSI	POUNDS PER SQUARE INCH
CQC	CONSTRUCTION QUALITY CONTROL	Q	FLOWRATE
CS	CORRUGATED STEEL	R	RIGHT, RADIUS
cu. ft.	CUBIC FEET	S	SLOPE
D	DEPTH	SCH.	SCHEDULE
D50	MEDIAN DIAMETER	SEC.	SECTION
DIA.	DIAMETER	SED.	SEDIMENTATION
DWG.	DRAWING	sq.	SQUARE
E	EASTING	STA.	STATION
EDS	ENERGY DISSIPATION STRUCTURE	STD	STANDARD
EL.	ELEVATION	THK	THICK
ew	EACH WAY	T.O.P.	TOP OF PIPE
FT.	FOOT, FEET	T.O.W.	TOP OF WALL
GA.	GAUGE	TRM	TURF REINFORCEMENT MAT
HDPE	HIGH-DENSITY POLYETHYLENE	TYP.	TYPICAL
HORIZ.	HORIZONTAL	VERT.	VERTICAL
I.E., INV. EL.	INVERT ELEVATION	W	WIDTH
INV.	INVERT	W.S.	WATER SURFACE

LEGEND

SYMBOL	FEATURE
	ACM (PROFILE)
	CHERT
	CHERT (LARGE)
	COLLUVIAL MATERIAL (COMPACTED)
	CONCRETE
	CONTOUR (EXISTING MAJOR)
	CONTOUR (EXISTING MINOR)
	CONTOUR (PROPOSED MAJOR)
	CONTOUR (PROPOSED MINOR)
	DINWOODY
	DINWOODY (COMPACTED)
	EXISTING GROUND

SYMBOL	FEATURE
	FILL (ROCK)
	FILL (COMPACTED/ COMPACTED GRANULAR)
	GEOMEMBRANE LINER ANCHOR
	GRADE (EXISTING PROFILE)
	GRADE (PROPOSED PROFILE)
	GRAVEL SURFACING
	LEASE BOUNDARY
	NON-WOVEN GEOTEXTILE
	ODA
	PIPE BEDDING
	PIPELINE
	RIPRAP

SYMBOL	FEATURE
	RIPRAP (GROUTED)
	ROAD ALIGNMENT
	ROCK (LARGE)
	SAND
	SILT FENCE
	STRAW WATTLE
	TAMPED BACKFILL
	TRM
	VEGETATION
	WATER (EXISTING)
	WELLS FORMATION

POLE CANYON NTCRA CONSTRUCTION GENERAL NOTES

1. ALL CONSTRUCTION SHALL CONFORM TO THESE PLANS AND SPECIFICATIONS.
2. MAJOR EARTHWORK TO BE PERFORMED BY SIMPLOT WITH ASSISTANCE FROM OTHER CONTRACTORS AS NECESSARY.
3. EXISTING MAPPING BASED ON RECENT AERIAL SURVEY. ADDITIONAL FIELD SURVEYING MAY BE NECESSARY. PROVIDE FIELD CQC SURVEYING DURING CONSTRUCTION.
4. PROTECT ALL EXISTING MONUMENTS, PIPELINE, BURIED POWER LINE, OTHER SURVEY MARKERS, SIGNS, UTILITIES, PAVEMENT, TREES, FENCES, AND ANY OTHER IMPORTANT OBJECTS ON THE JOB SITE.
5. PLACE SILT FENCE AROUND CONSTRUCTION AREA AND USE OTHER BMP CONTROLS AS NECESSARY TO MINIMIZE SEDIMENT RUNOFF FROM THE SITE IN ACCORDANCE WITH THE SITE STORMWATER POLLUTION PREVENTION PLAN.
6. PROVIDE FINAL AS-BUILT SURVEYS AT THE COMPLETION OF CONSTRUCTION AT THE ODA AND DINWOODY BORROW AREA.
7. DOWN STREAM BMPS SHALL REMAIN IN PLACE UNTIL VEGETATION IS ESTABLISHED ON THE ODA.
8. IMPLEMENT CONTINUOUS DUST CONTROL MEASURES DURING DRY OR WINDY WEATHER.
9. CONSTRUCTION STAGING/LAYDOWN AREAS WILL BE SUPPLIED AND APPROVED BY SIMPLOT. APPROPRIATE BERMS AND RUNOFF CONTROLS WILL BE INSTALLED.
10. PROVIDE ALL MATERIAL QUANTITIES INSTALLED AT THE ODA AND OTHER INFORMATION NECESSARY FOR CONSTRUCTION DOCUMENTATION.
11. OPEN AND OPERATE DINWOODY BORROW AREA IN ACCORDANCE WITH THE SPECIFICATIONS. REGRADE AND RECLAIM DINWOODY BORROW AREA AS SPECIFIED TO PROMOTE DRAINAGE, REDUCE EROSION, AND ESTABLISH VEGETATION.
12. CONSTRUCTION FEATURES WHERE MATERIAL IS SPECIFIED AS CHERT MAY BE SUBSTITUTED WITH SUITABLE LIMESTONE.
13. ALL WORK SHALL BE CONFINED TO THE LIMITS OF WORK AS SHOWN ON THE PLANS.
14. ALL FINAL SEEDING SHALL BE PERFORMED AT THE ODA AND DINWOODY BORROW AREA PRIOR TO GROUND FREEZING AT THE SITE.
15. VERIFY LOCATIONS AND ELEVATIONS OF EXISTING UNDERGROUND UTILITIES AND PIPELINES PRIOR TO CONSTRUCTION ACTIVITIES AT THE ODA AND DINWOODY BORROW AREA.
16. COVER SOILS (ALSO REFERED TO AS COVER) ARE DINWOODY FORMATION MATERIAL. COVER SOIL LINED DITCHES ARE LINED WITH DINWOODY FORMATION MATERIAL.
17. ALL FINAL GRADES OF THE ODA, INCLUDING GRADES OF RUN-ON AND RUNOFF DITCHES, CHUTES, SEDIMENTATION BASINS, AND ENERGY DISSIPATION STRUCTURES SHALL BE IN ACCORDANCE WITH THE SPECIFICATIONS.

REFERENCE	NO.	REVISIONS	BY	DATE	NO.	REVISIONS	BY	DATE
					2	ISSUE FOR BID AND CONSTRUCTION	BGH	01/15
					1	ISSUE FOR FINAL REVIEW	BGH	08/14
					0	ISSUE FOR 90% REVIEW	BGH	06/14

ORIGINAL SIGNED BY: BRIAN G. HANSEN
PROFESSIONAL ENGINEER REGISTERED STATE OF IDAHO BRIAN G. HANSEN 10674
01/02/2015
NOT VALID UNLESS SIGNED

FORMATION ENVIRONMENTAL

DESIGNED BY:	JHR
DRAWN BY:	BAP
CHECKED BY:	BGH
APPROVED BY:	BGH
FILE NAME: DwgG02p1_Legend.DWG	

J.R. SIMPLOT COMPANY - SMOKY CANYON MINE

POLE CANYON ODA NTCRA

CONSTRUCTION NOTES, LEGEND, AND ABBREVIATIONS

DATE JANUARY 2015 | DWG NO. 009-004-G2.1 | REVISION 2

S:\GIS\ARCPRJ\2010109\PLT\POLECANYONNTCRA\PRSC_PLAN\GENDRAWINGS\DWGG02P1_LEGEND.MXD

POLE CANYON NTCRA AS-BUILT SURVEY INFORMATION

NAME OF SURVEYOR: PIERSON LAND WORKS LLC
LICENSED SURVEYOR: JUSTIN STEFFLER LS-14222
DATE OF THE SURVEY: NOVEMBER 7, 2016

SURVEYER'S CONTROL POINTS USED FOR THE SURVEY; MEASURED NORTHINGS, EASTINGS, AND ELEVATIONS

SIMPLOT - POLE CANYON CONTROL POINTS (Feet)				
1	70863.744	81077.172	7402.871	RBPC
20	70957.32	80286.99	7407.01	RBPC
21	70356.58	82832.34	6919.87	RBPC
22	69176.51	82064.98	7141.55	RBPC
23	66486.8	78848.05	7321.21	RBPC
24	71497.52	79029.02	7490.18	RBPC
25	71094.41	78306.83	7317.54	RBPC

RBPC = REBAR WITH PLASTIC CAP (CONTROL)

DATUM USED TO GENERATE THE FINAL AS-BUILT CONTOURS:
THE LOCAL SMOKY CANYON MINE COORDINATE SYSTEM WAS USED TO GENERATE THE FINAL AS-BUILT CONTOURS. THE PHOTO TARGET POINTS FOR THE SURVEY ARE SHOWN IN THE LOCAL SMOKY COORDINATE SYSTEM AND IN THE STATE PLANE COORDINATE SYSTEM, IDAHO EAST STATE PLANE ZONE. THESE POINTS WERE USED TO TRANSFORM THE DATA FROM THE STATE PLANE TO LOCAL SMOKY COORDINATE SYSTEM. TRIMBLE BUSINESS CENTER (TBC) SOFTWARE WAS USED FOR THIS TRANSFORMATION. IN THE PROGRAM, SMOKY WAS THE “GROUND” AND THE STATE PLANE WAS THE “GRID” – SIMPLE SHIFT IN VERTICAL OF -10.805 FT.

TRANSFORMATION PARAMETERS:
DATA NORTHING: -300084.192
DATA EASTING: -856043.631
DATA ELEVATION: -10.805
Z ROTATION (AZIMUTH): 0 DEGREES 41 MINUTES 33 SECONDS
HORIZONTAL SCALE: 1.0003267774

SURVEYED CONTROL POINTS USED FOR COORDINATE TRANSFORMATIONS

SMOKY LOCAL COORDINATE SYSTEM (Feet)			
SMOKY_LOCAL_ID	X	Y	Z
1	70870.02904	81272.39848	7398.85448
2	70063.83843	81256.82658	7389.97385
3	69494.4848	81346.63083	7229.809
4	70862.89783	81851.49144	7228.98013
5	69217.22747	82105.39921	7137.4828
6	70474.96182	83321.47109	6881.79859
7	70018.12364	82643.25601	6987.17951
8	70417.67975	79824.25097	7392.15269
9	70276.10783	79381.51211	7344.32837
10	71067.88145	78441.40314	7294.29523
11	70631.82362	78592.85704	7246.81246
12	70212.53866	78432.9525	7240.99293
13	71129.78658	79080.68406	7458.5871

STATE PLANE COORDINATE SYSTEM (Horizontal Datum NAD83, Units U.S. Survey Feet; Vertical Datum NAVD88, Units in Feet)			
STATEPLANE_ID	X	Y	Z
101	370960.8384	937308.9229	7409.59007
102	370154.7819	937303.0984	7400.79571
103	369586.7409	937399.7462	7240.69028
104	370960.7072	937887.8706	7239.70784
105	369318.7625	938161.5613	7148.38235
106	370590.6878	939361.9501	6892.54578
107	370125.8374	938689.526	6997.98558
108	370491.1721	935866.8199	7402.95814
109	370344.3072	935425.9686	7355.15554
110	371124.4052	934476.6685	7305.05192
111	370690.3516	934633.3307	7257.61342
112	370269.3021	934478.5563	7251.84102
113	371194.0099	935114.9459	7469.32765

REFERENCE	NO.	REVISIONS	BY	DATE	NO.	REVISIONS	BY	DATE
					0	ISSUE FOR REVISED AS-BUILT	BGH	06/17

ORIGINAL SIGNED BY: BRIAN G. HANSEN
PROFESSIONAL ENGINEER REGISTERED 9074 STATE OF IDAHO BRIAN G. HANSEN
06/13/2017
NOT VALID UNLESS SIGNED

FORMATION ENVIRONMENTAL

DESIGNED BY:	FLC
DRAWN BY:	LLV
CHECKED BY:	BGH
APPROVED BY:	BGH
FILE NAME:	DwgG02-2_SurveyInfo

J.R. SIMPLOT COMPANY - SMOKY CANYON MINE
POLE CANYON ODA NTCRA

SURVEY NOTES AND COORDINATE SYSTEM INFORMATION

DATE	JUNE 2017	DWG NO.	009-004-G2.2	REVISION	0

S:\GIS\ARCPRJ\201\009\PLT\POLECANYONNTCRA\PRSC_PLAN\GEN\DRAWINGS\DWGG02-2_SURVEYINFO.MXD

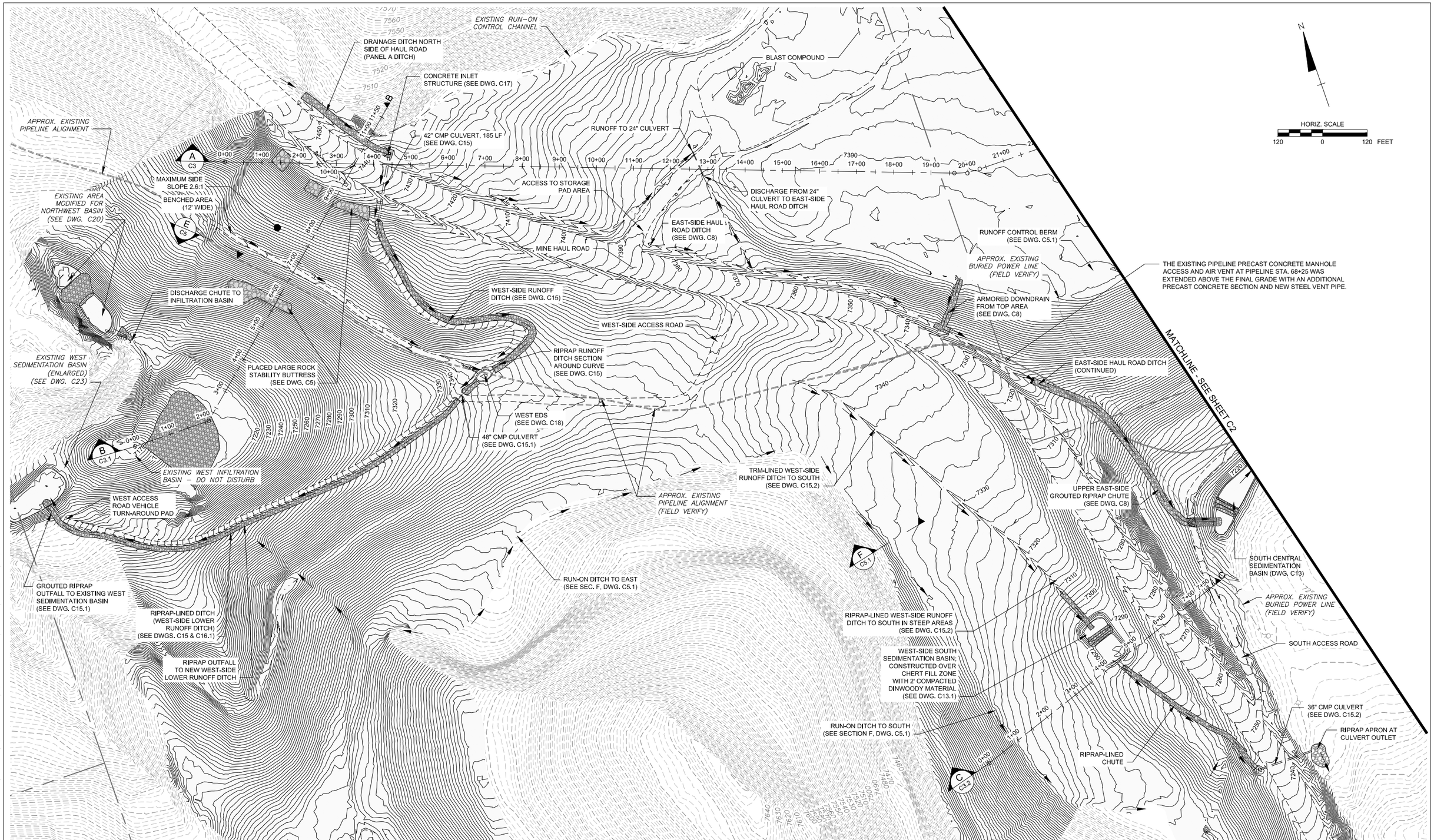

REFERENCE	NO.	REVISIONS	BY	DATE
	AB2	REVISED AS-BUILT	BGH	06/17
	AB	AS-BUILT	BGH	01/17
	4	INTERIM AS-BUILT	BGH	01/16
	3	ISSUE FOR BID AND CONSTRUCTION	BGH	12/14
	2	ISSUE FOR FINAL REVIEW	BGH	08/14
	1	ISSUE FOR 90% REVIEW	BGH	06/14
	0	ISSUE FOR REVIEW	BGH	02/14

KEY MAP

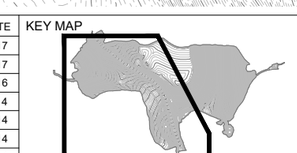

ORIGINAL SIGNED BY: BRIAN G. HANSEN

PROFESSIONAL ENGINEER REGISTERED STATE OF IDAHO BRIAN G. HANSEN 06/02/17

NOT VALID UNLESS SIGNED

FORMATION ENVIRONMENTAL

DESIGNED BY:	JHR
DRAWN BY:	JAY
CHECKED BY:	BGH
APPROVED BY:	BGH
FILE NAME: C1 - C3 Pole Canyon Grading P&P_AB.DWG	

J.R. SIMPLOT COMPANY - SMOKY CANYON MINE

POLE CANYON ODA-NTCRA

AS-BUILT GRADING PLAN
POLE CANYON ODA WEST AREA

DATE	JUNE 2017	DWG. NO.	009-004-C1	REVISION	AB2

E:\JYS Technical\Formation Environmental\Pole Canyon\Drawings\As-Built Drawings\C1 - C3 Pole Canyon Grading P&P_AB.dwg 6/2/2017 5:08 PM

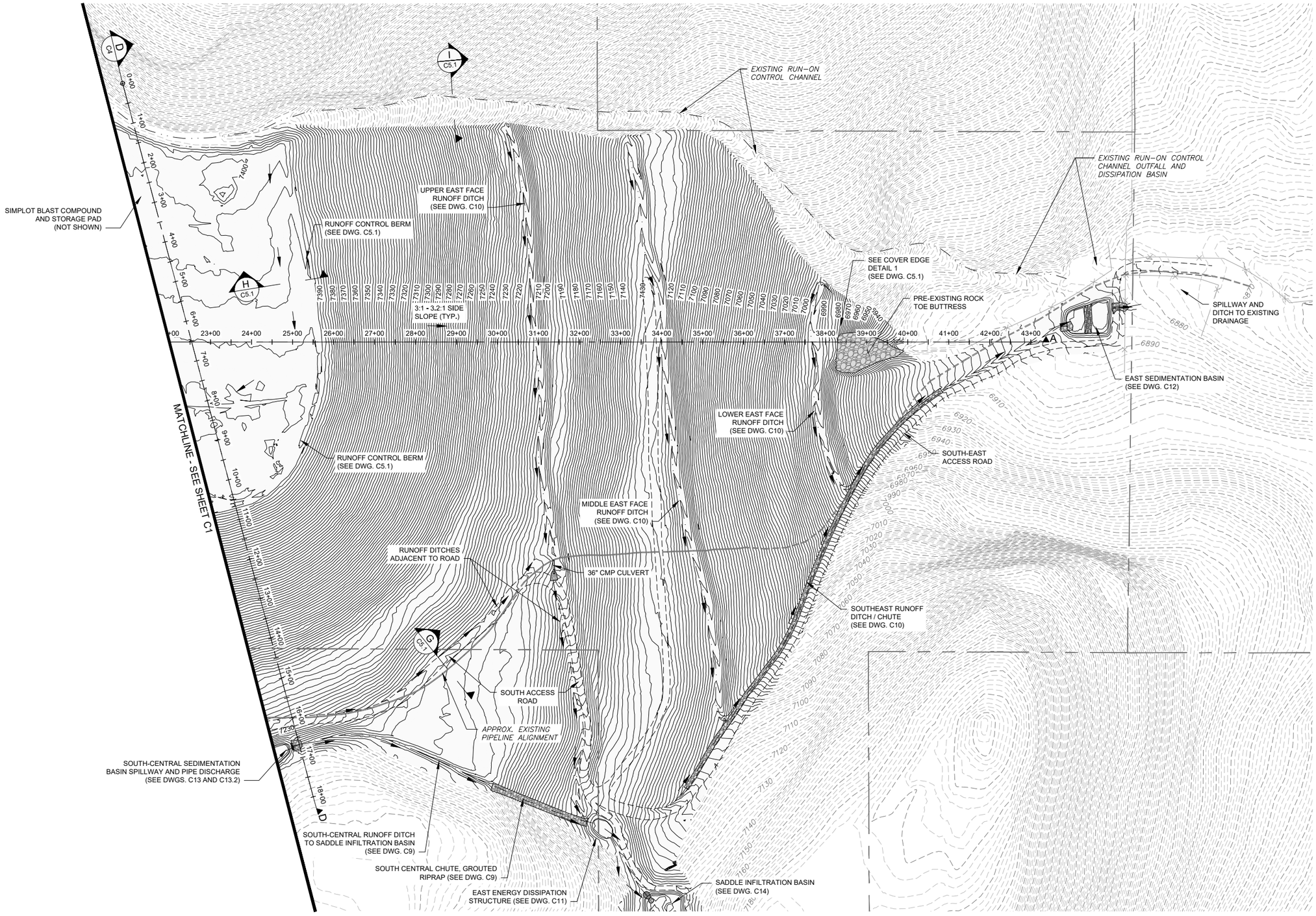

REFERENCE	NO.	REVISIONS	BY	DATE
	AB2	REVISED AS-BUILT	BGH	06/17
	AB	AS-BUILT	BGH	01/17
	4	INTERIM AS-BUILT	BGH	01/16
	3	ISSUE FOR BID AND CONSTRUCTION	BGH	12/14
	2	ISSUE FOR FINAL REVIEW	BGH	08/14
	1	ISSUE FOR 90% REVIEW	BGH	06/14
	0	ISSUE FOR REVIEW	BGH	02/14

KEY MAP

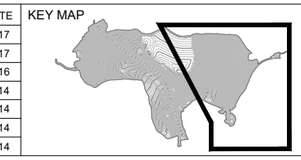

ORIGINAL SIGNED BY: BRIAN G. HANSEN

PROFESSIONAL ENGINEER REGISTERED STATE OF IDAHO BRIAN G. HANSEN 06/02/17

NOT VALID UNLESS SIGNED

FORMATION ENVIRONMENTAL

DESIGNED BY:	JHR
DRAWN BY:	JAY
CHECKED BY:	BGH
APPROVED BY:	BGH
FILE NAME: C1 - C3 Pole Canyon Grading P&P_AB.DWG	

J.R. SIMPLOT COMPANY - SMOKY CANYON MINE

POLE CANYON ODA-NTCRA

AS-BUILT GRADING PLAN
POLE CANYON ODA EAST AREA

DATE	JUNE 2017	DWG. NO.	009-004-C2	REVISION	AB2

E:\JYS Technical\Formation Environmental\Pole Canyon\Drawings\As-Built Drawings\C1 - C3 Pole Canyon Grading P&P_AB.dwg 5/31/2017 9:33 PM

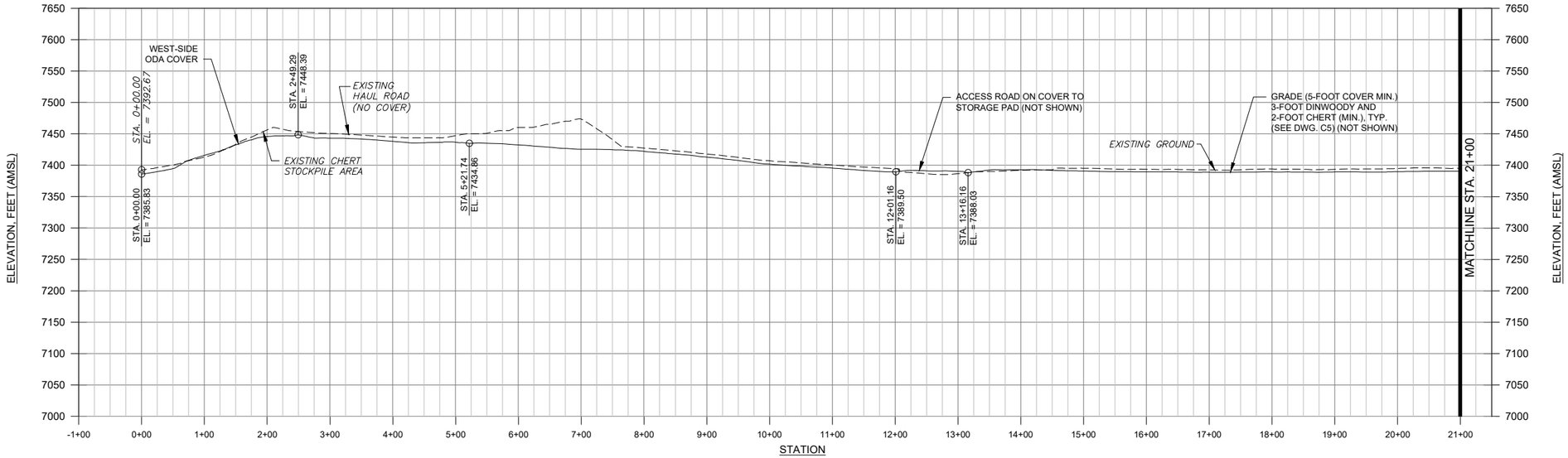

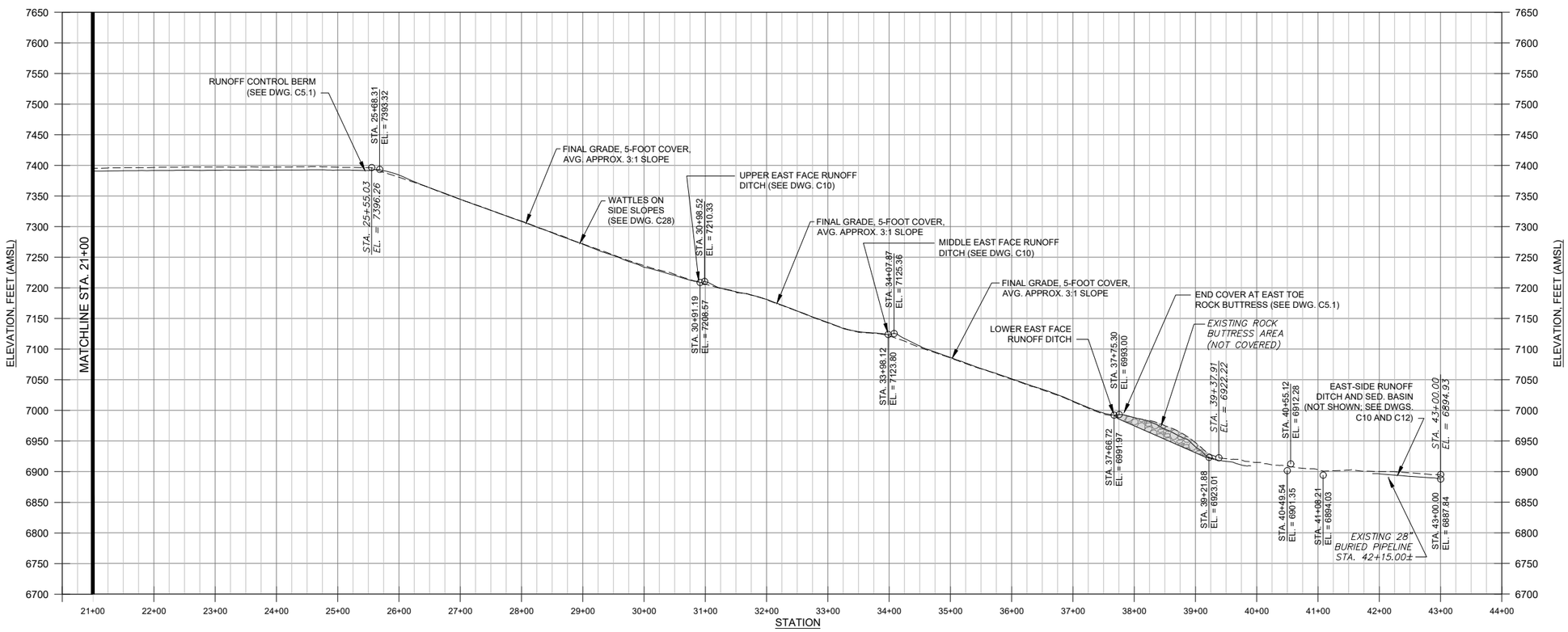

SECTION A C1 / A C2

HORIZ. SCALE 100 0 100 FEET

VERT. SCALE 100 0 100 FEET

REFERENCE	NO.	REVISIONS	BY	DATE
	AB2	REVISED AS-BUILT	BGH	06/17
	AB	AS-BUILT	BGH	01/17
	4	INTERIM AS-BUILT	BGH	01/16
	3	ISSUE FOR BID AND CONSTRUCTION	BGH	12/14
	2	ISSUE FOR FINAL REVIEW	BGH	08/14
	1	ISSUE FOR 90% REVIEW	BGH	06/14
	0	ISSUE FOR REVIEW	BGH	02/14

KEY MAP

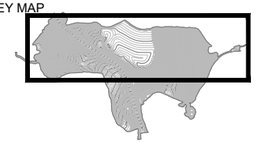

ORIGINAL SIGNED BY: BRIAN G. HANSEN

PROFESSIONAL ENGINEER REGISTERED 06/02/17 STATE OF IDAHO BRIAN G. HANSEN

NOT VALID UNLESS SIGNED

FORMATION ENVIRONMENTAL

DESIGNED BY:	JHR
DRAWN BY:	JAY
CHECKED BY:	BGH
APPROVED BY:	BGH
FILE NAME: C1 - C3 Pole Canyon Grading P&P_AB.DWG	

J.R. SIMPLOT COMPANY - SMOKY CANYON MINE

POLE CANYON ODA-NTCRA

AS-BUILT POLE CANYON ODA EAST-WEST SECTION A

DATE	JUNE 2017	DWG. NO.	009-004-C3	REVISION	AB2

E:\JYS Technical\Formation Environmental\Pole Canyon\Drawings\As-Built Drawings\C1 - C3 Pole Canyon Grading P&P_AB.dwg 5/31/2017 9:52 PM

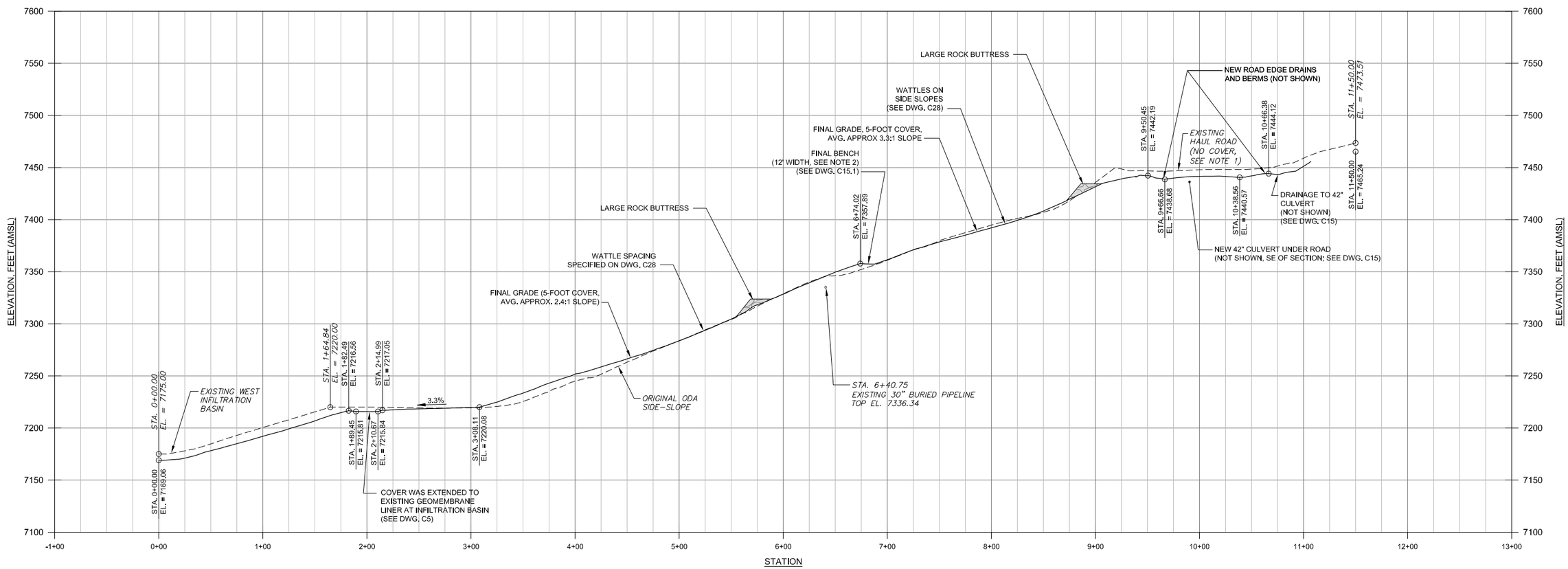

SECTION B / C1

NOTES:

1. A MINIMUM HAUL ROAD WIDTH BETWEEN EDGE BERMS OF 85' WAS MAINTAINED.
2. BENCH WAS SLOPED AT 2% INTO UPHILL SLOPE AND DRAINS SOUTH AT 1% TOWARDS THE WEST-SIDE EDS AS SHOWN ON DWG. C1.
3. VARIOUS PORTIONS OF THE COVER REQUIRE COMPLETION AND FINAL SURVEY IN 2016.

HORIZ. SCALE
50 0 50 FEET
VERT. SCALE
50 0 50 FEET

REFERENCE	NO.	REVISIONS	BY	DATE
	AB	AS-BUILT	BGH	01/17
	4	INTERIM AS-BUILT	BGH	01/16
	3	ISSUE FOR BID AND CONSTRUCTION	BGH	12/14
	2	ISSUE FOR FINAL REVIEW	BGH	08/14
	1	ISSUE FOR 90% REVIEW	BGH	06/14
	0	ISSUE FOR REVIEW	BGH	02/14

KEY MAP

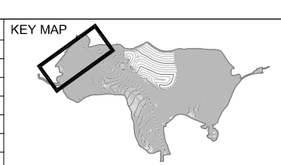

ORIGINAL SIGNED BY: BRIAN G. HANSEN
PROFESSIONAL ENGINEER REGISTERED STATE OF IDAHO 01/27/17 BRIAN G. HANSEN
NOT VALID UNLESS SIGNED

FORMATION ENVIRONMENTAL

DESIGNED BY:	JHR
DRAWN BY:	JAY
CHECKED BY:	BGH
APPROVED BY:	BGH
FILE NAME: C3.1 - C4 Pole Canyon Grading P&P_AB.DWG	

J.R. SIMPLOT COMPANY - SMOKY CANYON MINE
POLE CANYON ODA-NTCRA
AS-BUILT POLE CANYON ODA
WEST-SIDE SECTION B

DATE JANUARY 2017 | DWG. NO. 009-004-C3.1 | REVISION AB

E:\JYS Technical\Formation Environmental\Pole Canyon\Drawings\As-Built Drawings\C3.1 - C4 Pole Canyon Grading P&P_AB.dwg 12/27/2016 5:40 PM

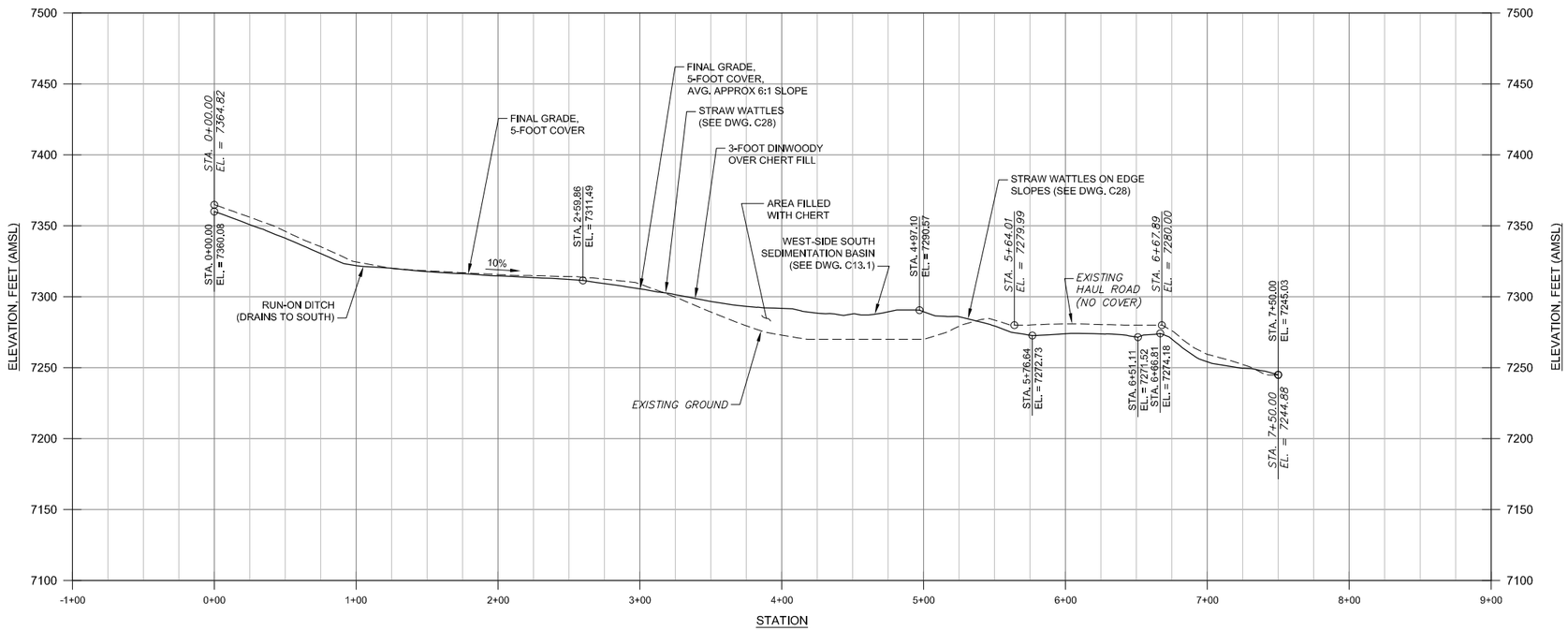

SECTION C / C1

HORIZ. SCALE
50 0 50 FEET

VERT. SCALE
50 0 50 FEET

REFERENCE	NO.	REVISIONS	BY	DATE
	AB	AS-BUILT	BGH	01/17
	4	INTERIM AS-BUILT	BGH	01/16
	3	ISSUE FOR BID AND CONSTRUCTION	BGH	12/14
	2	ISSUE FOR FINAL REVIEW	BGH	08/14
	1	ISSUE FOR 90% REVIEW	BGH	06/14
	0	ISSUE FOR REVIEW	BGH	02/14

KEY MAP

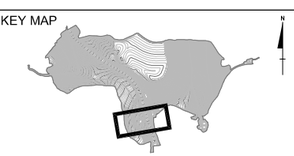

ORIGINAL SIGNED BY: BRIAN G. HANSEN

PROFESSIONAL ENGINEER REGISTERED STATE OF IDAHO BRIAN G. HANSEN 01/27/17

NOT VALID UNLESS SIGNED

FORMATION ENVIRONMENTAL

DESIGNED BY:	JHR
DRAWN BY:	JAY
CHECKED BY:	BGH
APPROVED BY:	BGH
FILE NAME: C3.1 - C4 Pole Canyon Grading P&P_AB.DWG	

J.R. SIMPLOT COMPANY - SMOKY CANYON MINE

POLE CANYON ODA-NTCRA

AS-BUILT POLE CANYON ODA
SOUTHWEST-SIDE SECTION C

DATE JANUARY 2017 | DWG. NO. 009-004-C3.2 | REVISION AB

E:\JYS Technical\Formation Environmental\Pole Canyon\Drawings\As-Built Drawings\C3.1 - C4 Pole Canyon Grading P&P_AB.dwg 12/27/2016 5:40 PM

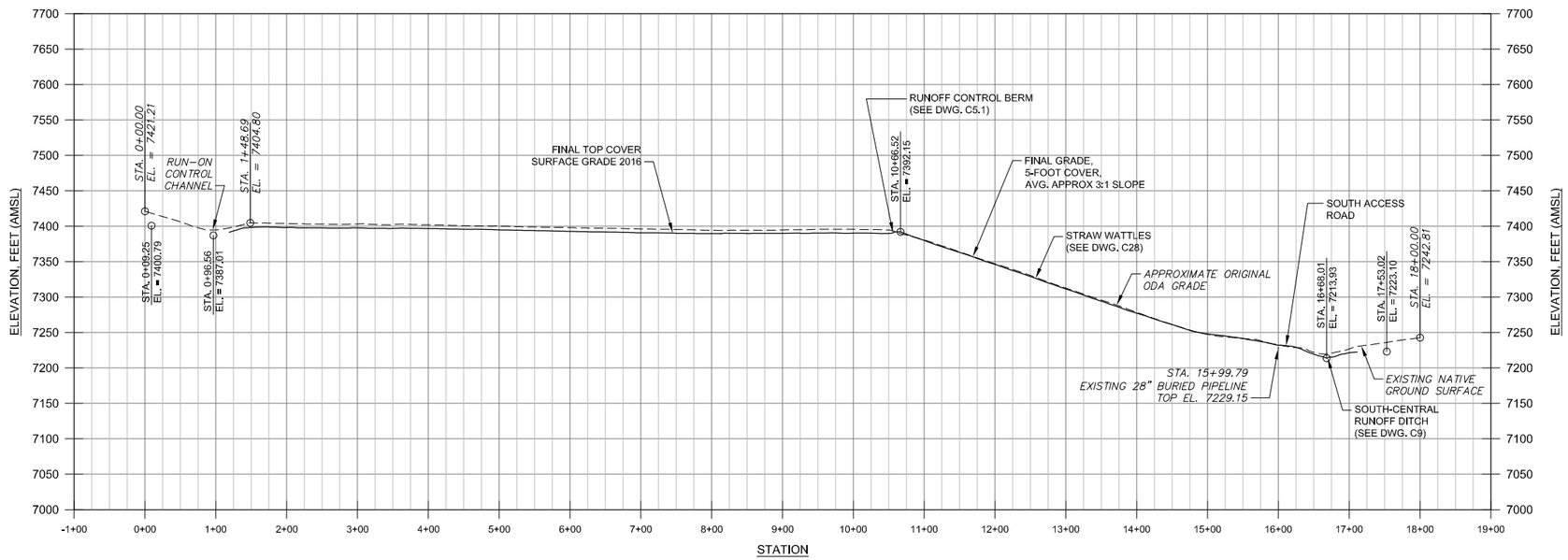

SECTION D / C2

HORIZ. SCALE
100 0 100 FEET

VERT. SCALE
100 0 100 FEET

REFERENCE	NO.	REVISIONS	BY	DATE
	AB	AS-BUILT	BGH	01/17
	4	INTERIM AS-BUILT	BGH	01/16
	3	ISSUE FOR BID AND CONSTRUCTION	BGH	12/14
	2	ISSUE FOR FINAL REVIEW	BGH	08/14
	1	ISSUE FOR 90% REVIEW	BGH	06/14
	0	ISSUE FOR REVIEW	BGH	02/14

KEY MAP

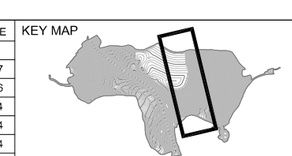

ORIGINAL SIGNED BY: BRIAN G. HANSEN

PROFESSIONAL ENGINEER REGISTERED STATE OF IDAHO BRIAN G. HANSEN 01/27/17

NOT VALID UNLESS SIGNED

FORMATION ENVIRONMENTAL

DESIGNED BY:	JHR
DRAWN BY:	JAY
CHECKED BY:	BGH
APPROVED BY:	BGH
FILE NAME: C3.1 - C4 Pole Canyon Grading P&P_AB.DWG	

J.R. SIMPLOT COMPANY - SMOKY CANYON MINE

POLE CANYON ODA-NTCRA

AS-BUILT POLE CANYON ODA
EAST SIDE NORTH-SOUTH SECTION D

DATE	JANUARY 2017	DWG. NO.	009-004-C4	REVISION	AB

E:\JYS Technical\Formation Environmental\Pole Canyon\Drawings\As-Built Drawings\C3.1 - C4 Pole Canyon Grading P&P_AB.dwg 12/27/2016 5:40 PM

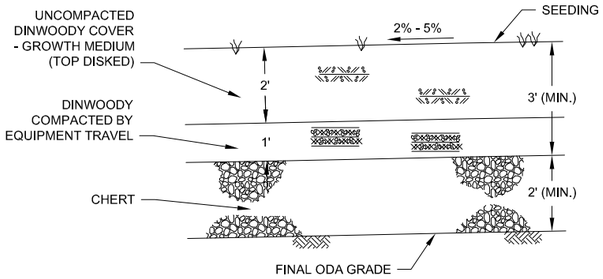

TYPICAL SECTION - TOP ODA COVER

SCALE 2 0 2 FEET

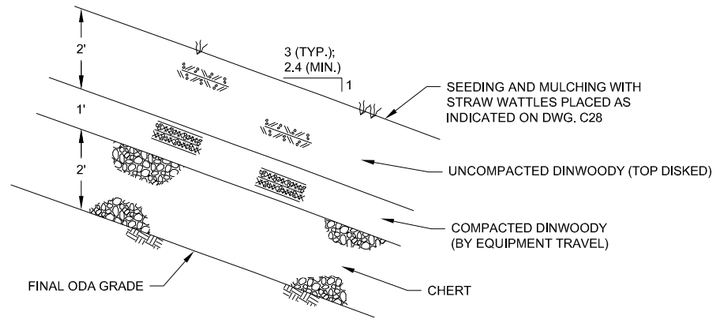

TYPICAL SECTION - ODA COVER - SIDE SLOPES

SCALE 2 0 2 FEET

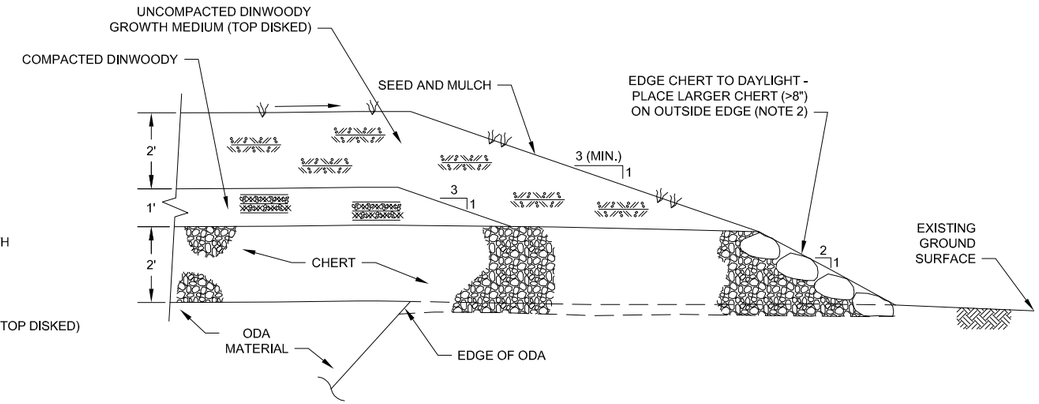

TYPICAL SECTION (E / C1) EDGE OF COVER SYSTEM

SCALE 2 0 2 FEET

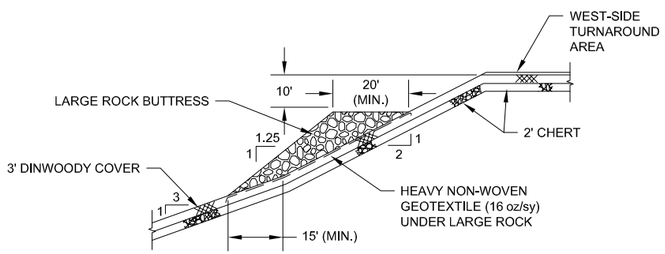

TYPICAL SECTION
ROCK STABILITY BUTTRESS - WEST SIDE

SCALE 20 0 20 FEET

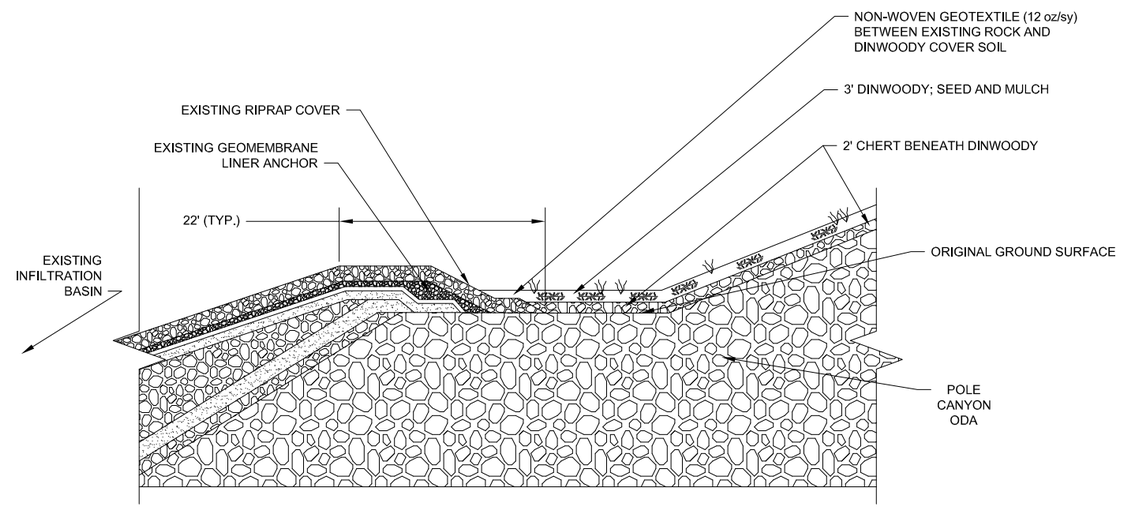

TYPICAL SECTION - WEST EDGE TOP ODA COVER

(SEE DWG. C1)
NOT TO SCALE

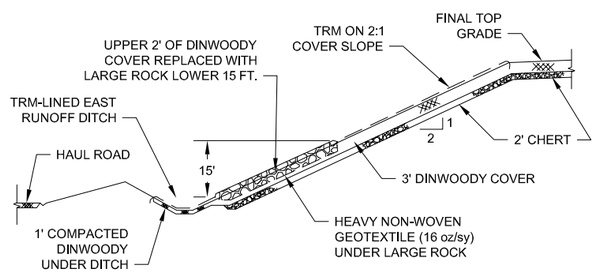

NOTE: LARGE ROCK HAS A D50 = 24 - 26" WITH A SIZE RANGE OF 18" TO 48" (MAX.).

TYPICAL SECTION
EAST-SIDE STEEP SLOPE ROCK STABILIZATION
(NOTE 3)

SCALE 20 0 20 FEET

NOTES:

1. TOE TERMINATION DETAIL AT EXISTING EAST TOE ROCK ZONE SHOWN ON DWG. C5.1.
2. LARGER CHERT ROCK PLACED ON THE OUTSIDE EDGE OF THE CHERT DAYLIGHT ZONE TO PROVIDE STABILITY OF THE DRAINAGE LAYER AND EROSION CONTROL.
3. ROCK STABILIZATION ON 2:1 SLOPE EXTENDS FROM APROX. 350 FT. NORTH OF EAST TOP DOWNDRAIN TO APPROX. 300 FT. SOUTH OF DOWNDRAIN.

REFERENCE	NO.	REVISIONS	BY	DATE
	AB	AS-BUILT	BGH	01/17
	3	ISSUE FOR BID AND CONSTRUCTION	BGH	12/14
	2	ISSUE FOR FINAL REVIEW	BGH	08/14
	1	ISSUE FOR 90% REVIEW	BGH	06/14
	0	ISSUE FOR REVIEW	BGH	02/14

KEY MAP

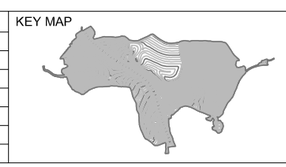

ORIGINAL SIGNED BY: BRIAN G. HANSEN

PROFESSIONAL ENGINEER REGISTERED STATE OF IDAHO BRIAN G. HANSEN 01/27/17

NOT VALID UNLESS SIGNED

FORMATION ENVIRONMENTAL

DESIGNED BY:	JHR
DRAWN BY:	SCG
CHECKED BY:	BGH
APPROVED BY:	BGH
FILE NAME:	009-004-C5.DWG

J.R. SIMPLOT COMPANY - SMOKY CANYON MINE

POLE CANYON ODA-NTCRA

TYPICAL SECTIONS AND DETAILS - CHERT/DINWOODY COVER SYSTEM

DATE JANUARY 2017 | DWG. NO. 009-004-C5 | REVISION AB

E:\JYS Technical\Formation Environmental\Pole Canyon\Drawings\As-Built Drawings\SCG_CAD Files\C5 - Standard\C5.dwg 1/16/2017 7:20 PM

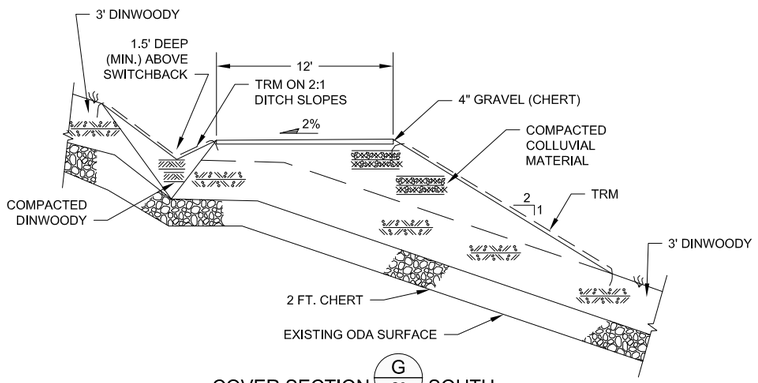

COVER SECTION G/C2 SOUTH ACCESS ROAD NEAR SWITCHBACK

SCALE 5 0 5 FEET

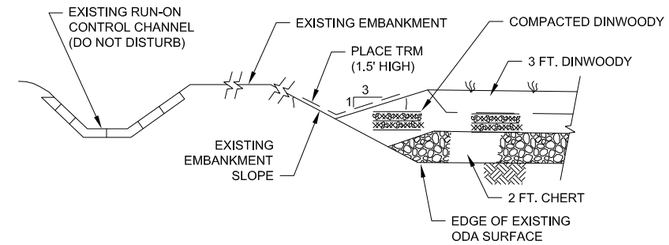

NORTH COVER EDGE SECTION I/C2 DETAIL- EXISTING RUN-ON CONTROL CHANNEL AREA

NOT TO SCALE

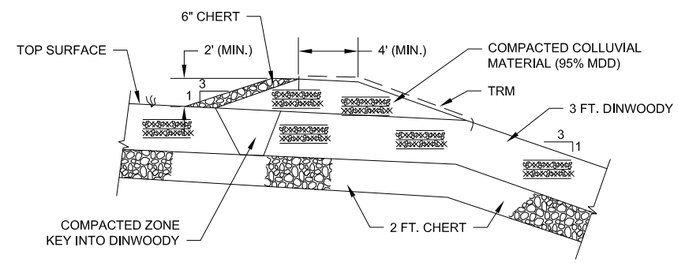

TYPICAL SECTION H/C2 TOP RUNOFF CONTROL BERM

SCALE 5 0 5 FEET

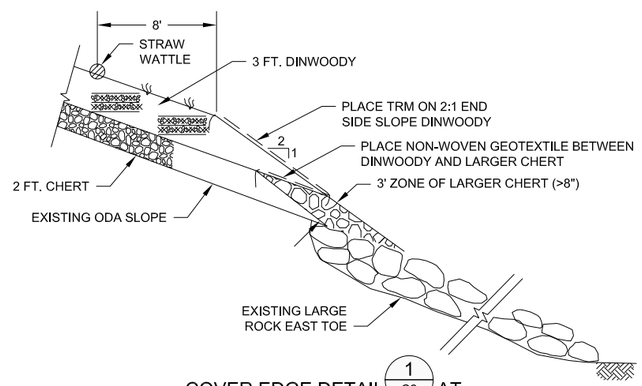

COVER EDGE DETAIL 1/C2 AT EAST TOE ROCK ZONE

SCALE 5 0 5 FEET

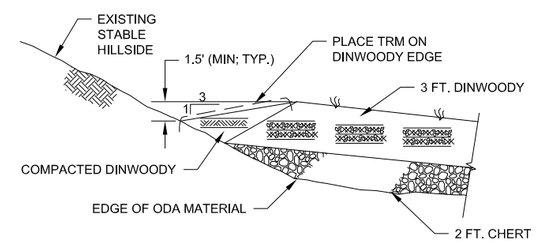

EDGE OF COVER AT EXISTING STABLE HILLSIDE SECTION F/C1

NOT TO SCALE

NOTE:

1. COLLUVIAL MATERIAL SHALL BE A MINUS 4-INCH, COMPACTIBLE SANDY TO SILTY GRAVEL MATERIAL HAVING NO MORE THAN 50 PERCENT FINES PER SPECIFICATIONS.

REFERENCE	NO.	REVISIONS	BY	DATE
	2	ISSUE FOR BID AND CONSTRUCTION	BGH	12/14
	1	ISSUE FOR FINAL REVIEW	BGH	08/14
	0	ISSUE FOR 90% REVIEW	BGH	06/14

ORIGINAL SIGNED BY: BRIAN G. HANSEN

PROFESSIONAL ENGINEER REGISTERED 12/31/14 STATE OF IDAHO BRIAN G. HANSEN

NOT VALID UNLESS SIGNED

FORMATION ENVIRONMENTAL

DESIGNED BY:	JHR
DRAWN BY:	SCG
CHECKED BY:	BGH
APPROVED BY:	BGH
FILE NAME:	009-004-C5.1 .DWG

J.R. SIMPLOT COMPANY - SMOKY CANYON MINE

POLE CANYON ODA REMOVAL ACTION

MISCELLANEOUS COVER SECTIONS AND DETAILS

DATE DECEMBER 2014 | DWG. NO. 009-004-C5.1 | REVISION 2

C:\Users\Steve\Documents\Formations\Smoky Pole Canyon\Sheet Files\Final – Aug 2014\C5point1.dwg 1/6/2015 9:23 PM

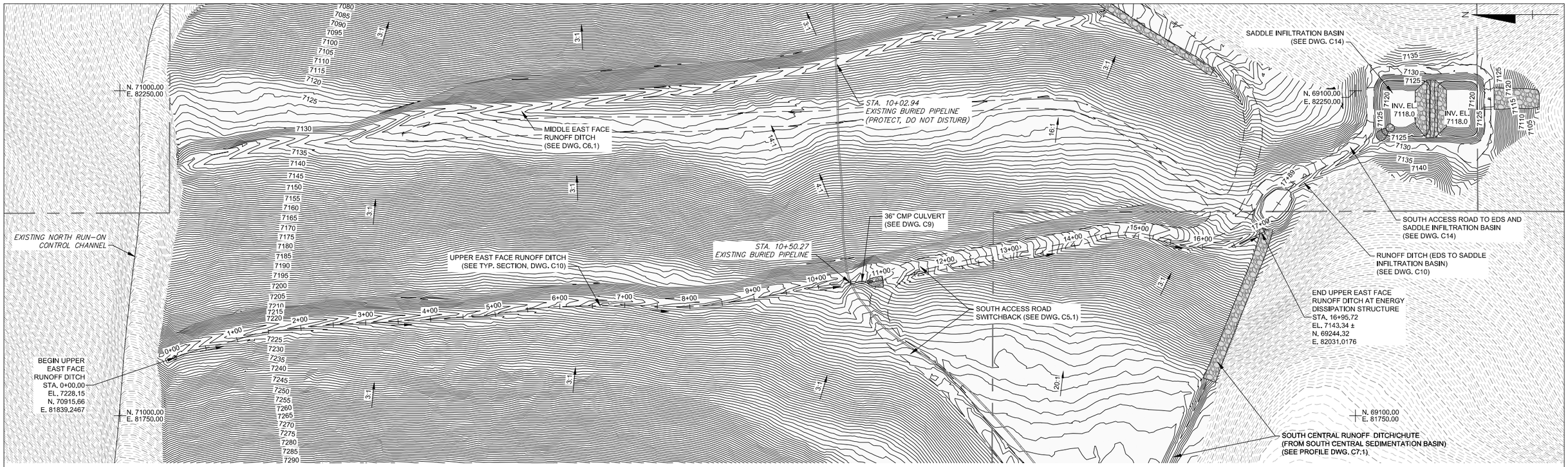

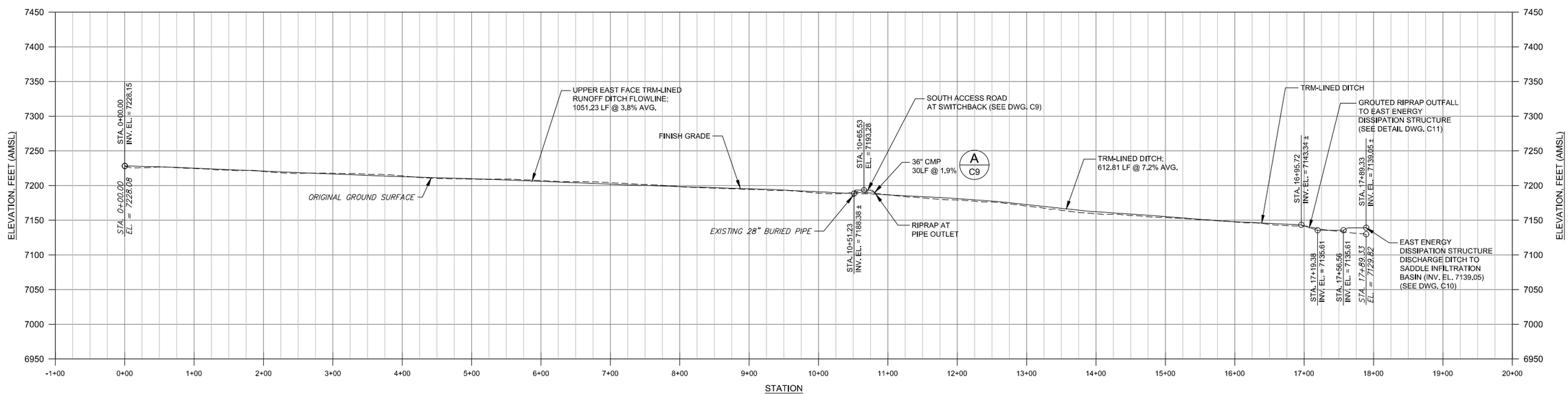

HORIZ. SCALE
75 0 75 FEET

VERT. SCALE
75 0 75 FEET

REFERENCE	NO.	REVISIONS	BY	DATE
	AB2	REVISED AS-BUILT	BGH	06/17
	AB	AS-BUILT	BGH	01/17
	3	INTERIM AS-BUILT	BGH	01/16
	2	ISSUE FOR BID AND CONSTRUCTION	BGH	12/14
	1	ISSUE FOR FINAL REVIEW	BGH	08/14
	0	ISSUE FOR 90% REVIEW	BGH	06/14

KEY MAP

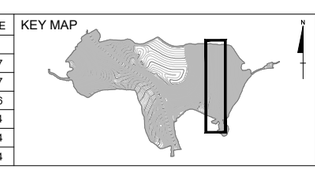

ORIGINAL SIGNED BY: BRIAN G. HANSEN

PROFESSIONAL ENGINEER REGISTERED STATE OF IDAHO BRIAN G. HANSEN 06/02/17

NOT VALID UNLESS SIGNED

FORMATION ENVIRONMENTAL

DESIGNED BY:	JHR
DRAWN BY:	JAY
CHECKED BY:	BGH
APPROVED BY:	BGH
FILE NAME: C5-C6.1 - East-Side Runoff Ditches P&P_AB.DWG	

J.R. SIMPLOT COMPANY - SMOKY CANYON MINE

POLE CANYON ODA-NTCRA

AS-BUILT UPPER EAST FACE RUNOFF DITCH PLAN AND PROFILE

DATE JUNE 2017 | DWG. NO. 009-001-C6 | REVISION AB2

E:\JYS Technical\Formation Environmental\Pole Canyon\Drawings\As-Built Drawings\C6-C6.1 - East-Side Runoff Ditches P&P_AB.dwg 5/31/2017 10:29 PM

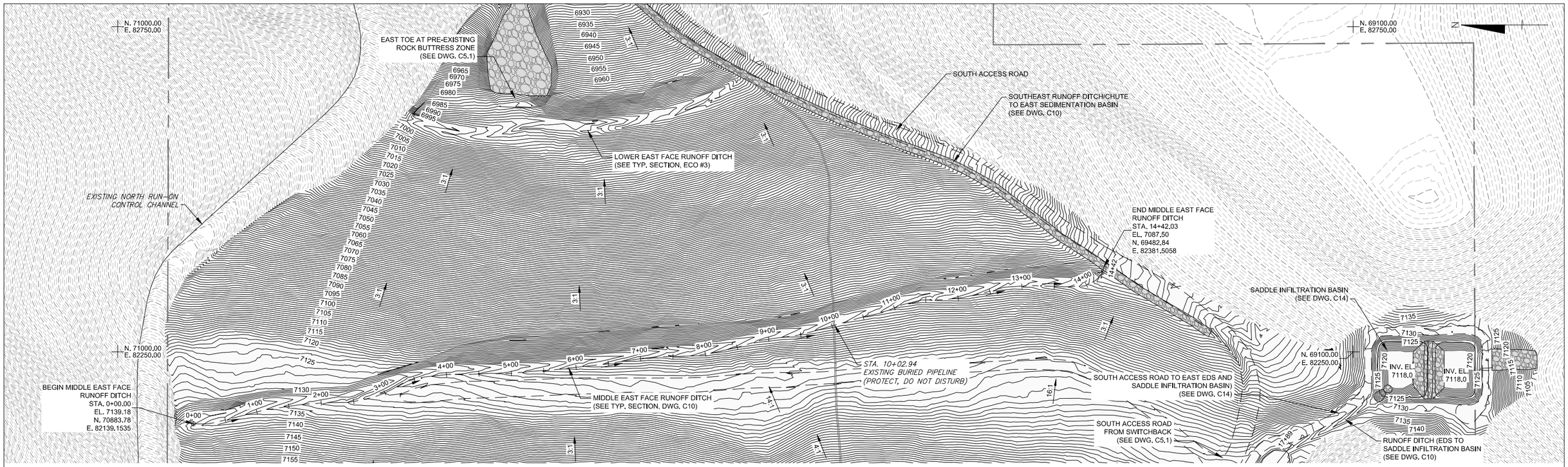

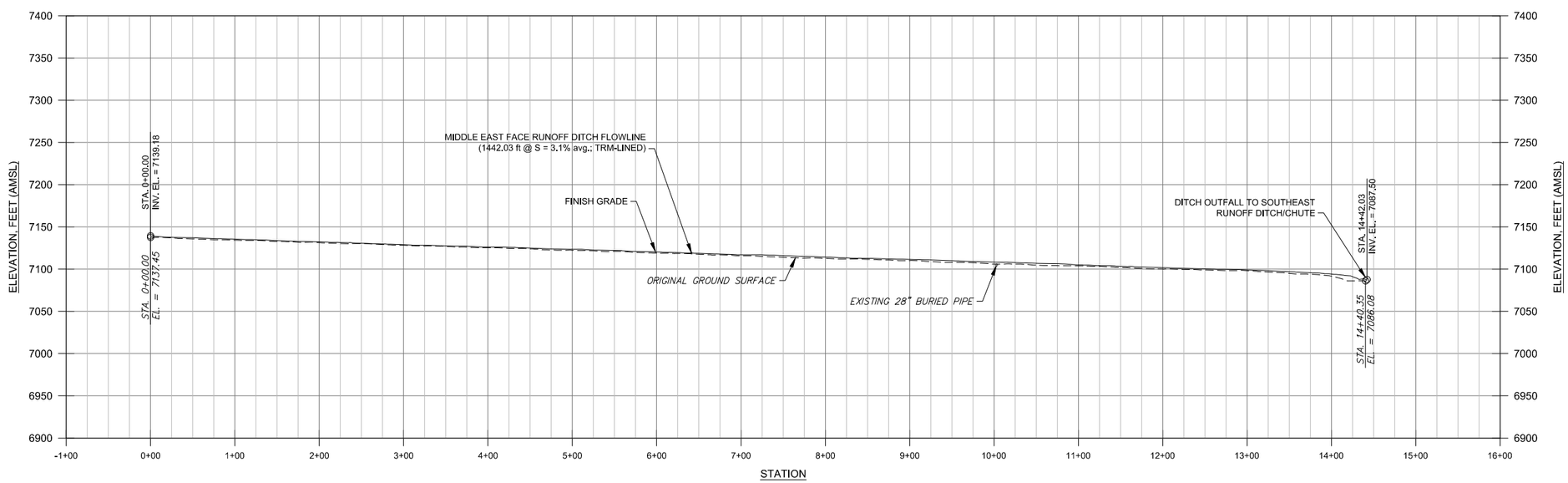

HORIZ. SCALE
75 0 75 FEET

VERT. SCALE
75 0 75 FEET

REFERENCE	NO.	REVISIONS	BY	DATE
	AB2	REVISED AS-BUILT	BGH	06/17
	AB	AS-BUILT	BGH	01/17
	3	INTERIM AS-BUILT	BGH	01/16
	2	ISSUE FOR BID AND CONSTRUCTION	BGH	12/14
	1	ISSUE FOR FINAL REVIEW	BGH	08/14
	0	ISSUE FOR 90% REVIEW	BGH	06/14

KEY MAP

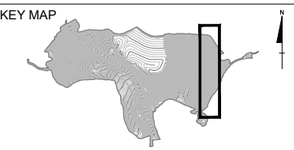

ORIGINAL SIGNED BY: BRIAN G. HANSEN
PROFESSIONAL ENGINEER REGISTERED 06/02/17 STATE OF IDAHO BRIAN G. HANSEN
NOT VALID UNLESS SIGNED

FORMATION ENVIRONMENTAL

DESIGNED BY:	JHR
DRAWN BY:	JAY
CHECKED BY:	BGH
APPROVED BY:	BGH
FILE NAME: C6-C6.1 - East-Side Runoff Ditches P&P_AB.DWG	

J.R. SIMPLOT COMPANY - SMOKY CANYON MINE

POLE CANYON ODA-NTCRA

AS-BUILT MIDDLE AND LOWER EAST FACE RUNOFF DITCH PLAN AND MIDDLE DITCH PROFILE

DATE JUNE 2017 | DWG. NO. 009-001-C6.1 | REVISION AB2

E:\YIS Technical\Formation Environmental\Pole Canyon\Drawings\As-Built Drawings\C6-C6.1 - East-Side Runoff Ditches P&P_AB.dwg 5/31/2017 10:29 PM

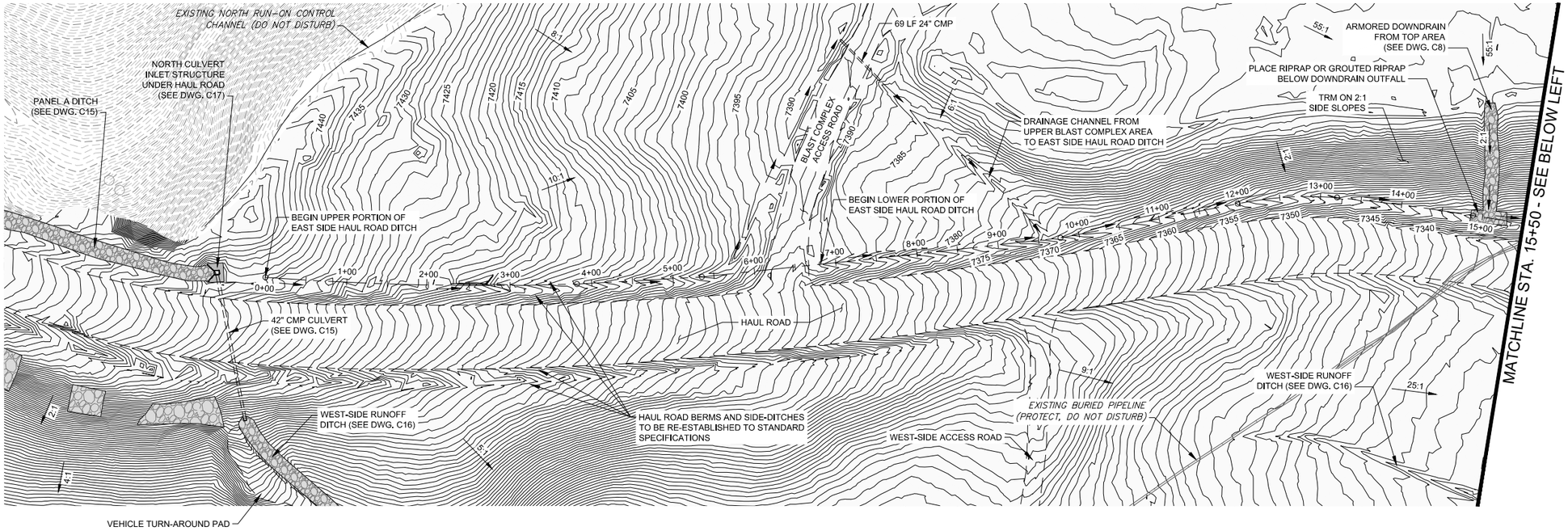

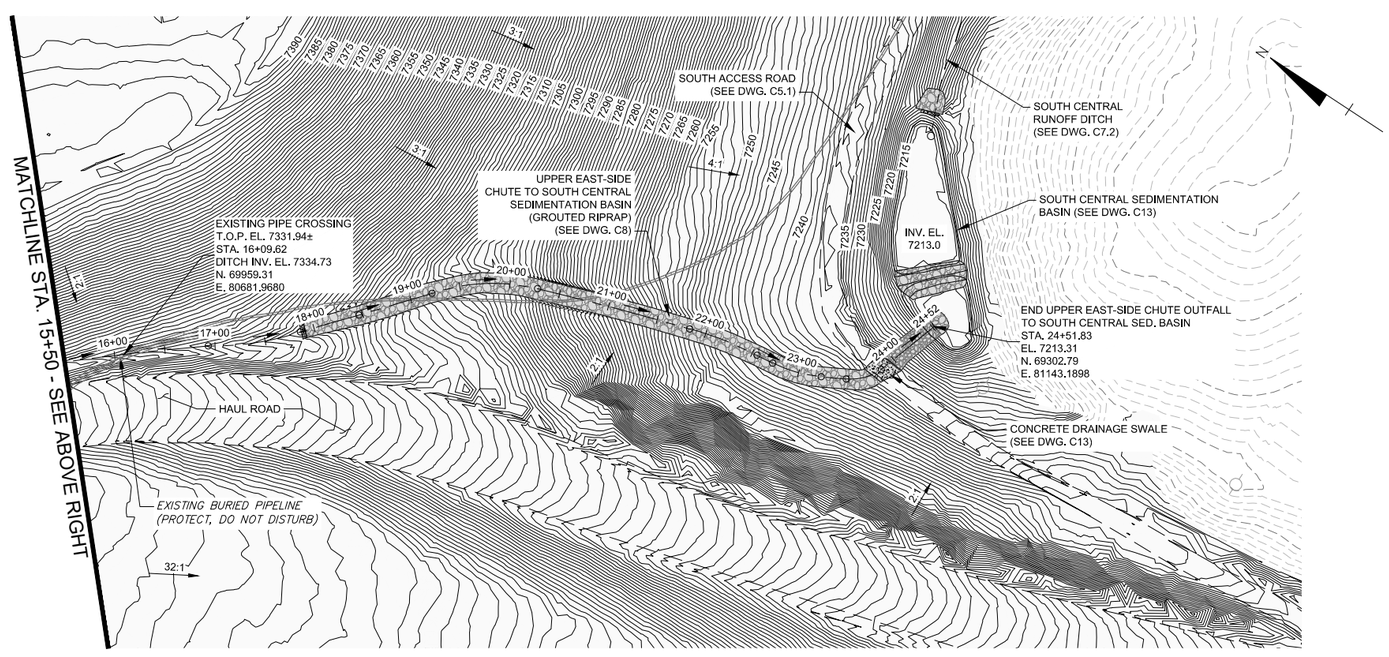

HORIZ. SCALE
75 0 75 FEET

REFERENCE	NO.	REVISIONS	BY	DATE
	AB2	REVISED AS-BUILT	BGH	06/17
	AB	AS-BUILT	BGH	01/17
	3	INTERIM AS-BUILT	BGH	01/16
	2	ISSUE FOR BID AND CONSTRUCTION	BGH	12/14
	1	ISSUE FOR FINAL REVIEW	BGH	08/14
	0	ISSUE FOR 90% REVIEW	BGH	06/14

KEY MAP

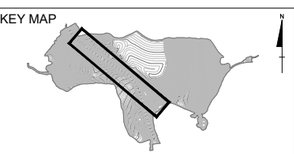

ORIGINAL SIGNED BY: BRIAN G. HANSEN
PROFESSIONAL ENGINEER REGISTERED STATE OF IDAHO BRIAN G. HANSEN 06/02/17
NOT VALID UNLESS SIGNED

FORMATION ENVIRONMENTAL

DESIGNED BY:	JHR
DRAWN BY:	JAY
CHECKED BY:	BGH
APPROVED BY:	BGH
FILE NAME:	C7-C7.1 - East-Side Runoff Ditches P&P.DWG

J.R. SIMPLOT COMPANY - SMOKY CANYON MINE

POLE CANYON ODA-NTCRA

EAST-SIDE RUNOFF DIVERSION DITCH PLAN

DATE	JUNE 2017	DWG. NO.	009-001-C7	REVISION	AB2

E:\JYS Technical\Formation Environmental\Pole Canyon\Drawings\As-Built Drawings\C7 - East-Side Runoff Ditches P&P_AB.dwg 5/31/2017 10:27 PM

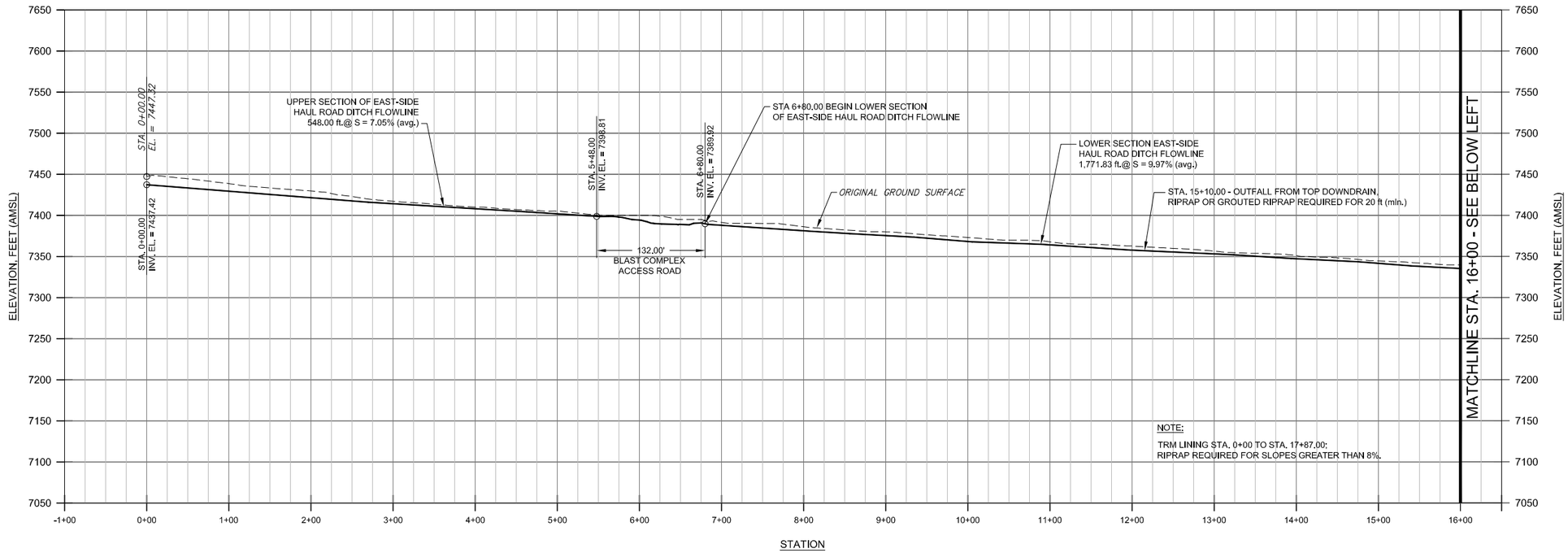

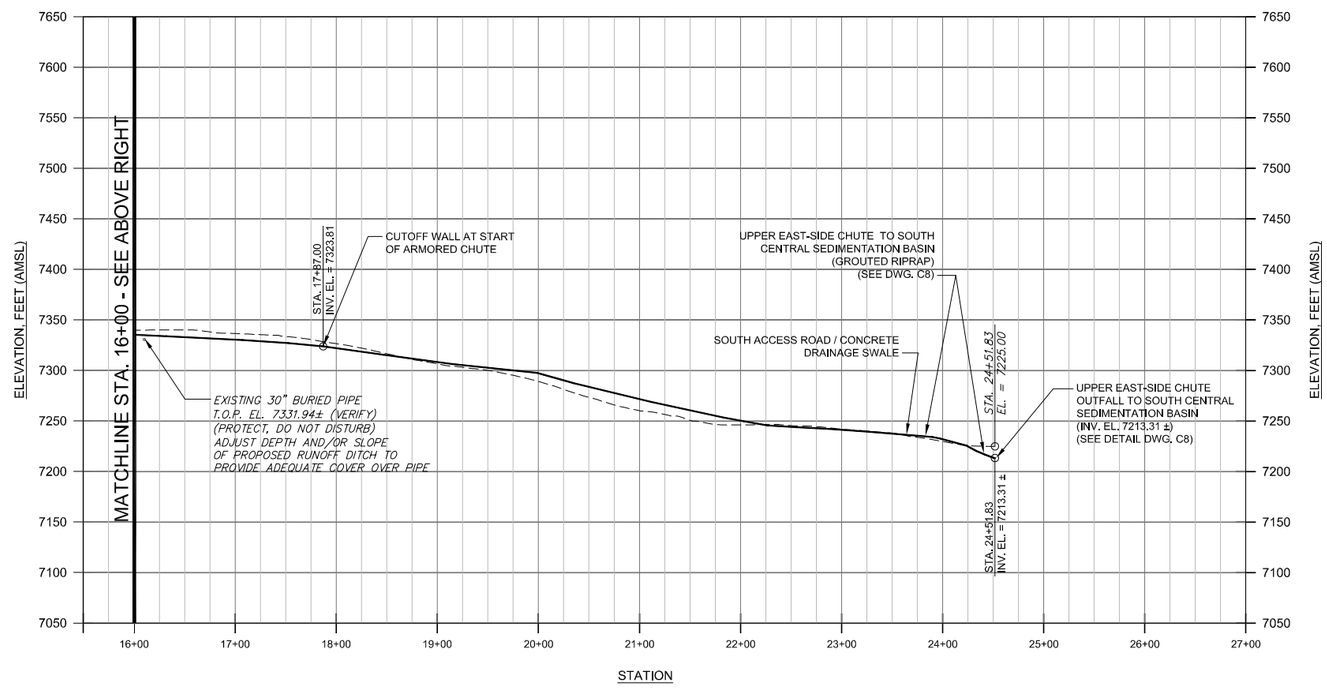

HORIZ. SCALE
75 0 75 FEET

VERT. SCALE
75 0 75 FEET

REFERENCE	NO.	REVISIONS	BY	DATE
	AB	AS-BUILT	BGH	01/17
	3	INTERIM AS-BUILT	BGH	01/16
	2	ISSUE FOR BID AND CONSTRUCTION	BGH	12/14
	1	ISSUE FOR FINAL REVIEW	BGH	08/14
	0	ISSUE FOR 90% REVIEW	BGH	06/14

KEY MAP

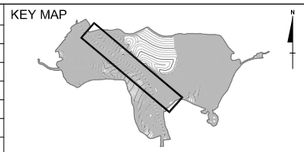

ORIGINAL SIGNED BY: BRIAN G. HANSEN

PROFESSIONAL ENGINEER REGISTERED 01/27/17 STATE OF IDAHO BRIAN G. HANSEN

NOT VALID UNLESS SIGNED

FORMATION ENVIRONMENTAL

DESIGNED BY:	JHR
DRAWN BY:	JAY
CHECKED BY:	BGH
APPROVED BY:	BGH
FILE NAME: C7-C7.1 - East-Side Runoff Ditches P&P.DWG	

J.R. SIMPLOT COMPANY - SMOKY CANYON MINE

POLE CANYON ODA-NTCRA

EAST-SIDE RUNOFF DIVERSION DITCH PROFILE

DATE	JANUARY 2017	DWG. NO.	009-001-C7.1	REVISION	AB

E:\JYS Technical\Formation Environmental\Pole Canyon\Drawings\As-Built Drawings\C7 - East-Side Runoff Ditches P&P_AB.dwg 12/28/2016 3:18 PM

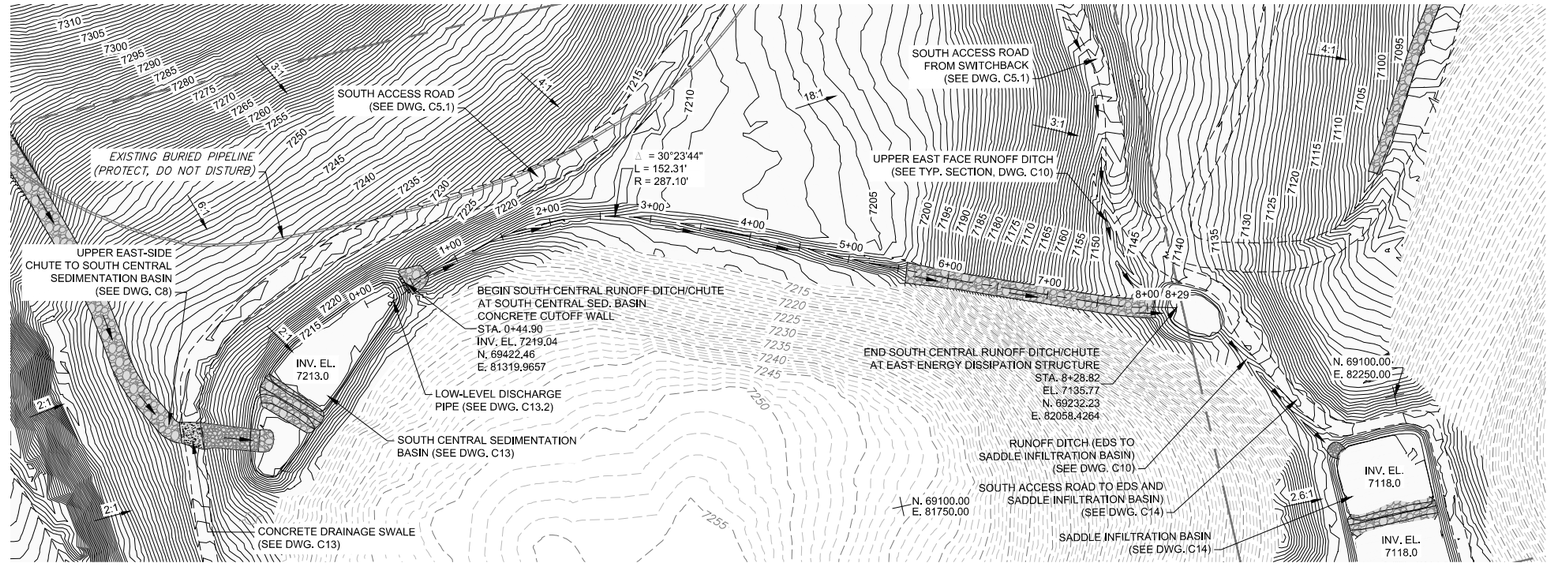

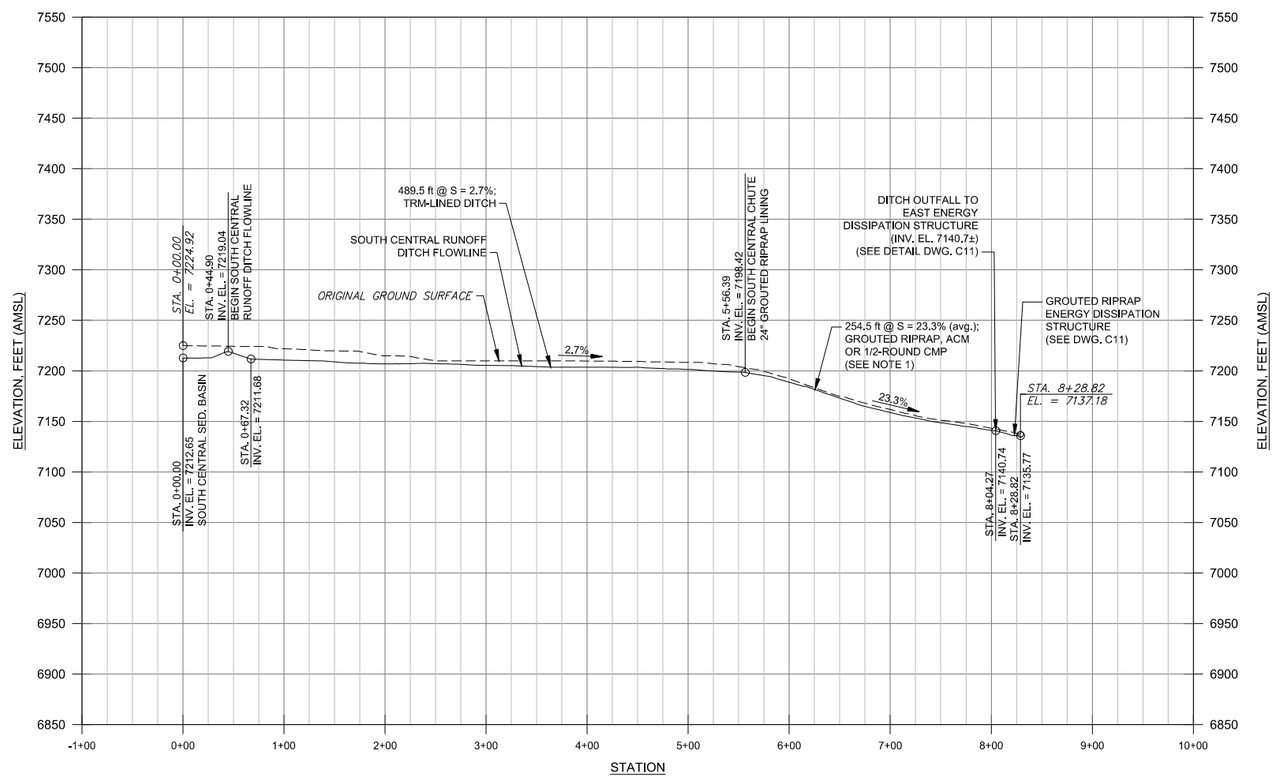

HORIZ. SCALE
75 0 75 FEET

VERT. SCALE
75 0 75 FEET

REFERENCE	NO.	REVISIONS	BY	DATE
	AB2	REVISED AS-BUILT	BGH	06/17
	AB	AS-BUILT	BGH	01/17
	3	INTERIM AS-BUILT	BGH	01/16
	2	ISSUE FOR BID AND CONSTRUCTION	BGH	12/14
	1	ISSUE FOR FINAL REVIEW	BGH	08/14
	0	ISSUE FOR 90% REVIEW	BGH	06/14

KEY MAP

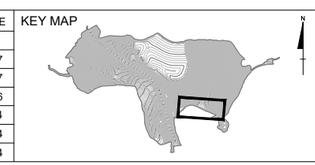

ORIGINAL SIGNED BY: BRIAN G. HANSEN
PROFESSIONAL ENGINEER REGISTERED STATE OF IDAHO BRIAN G. HANSEN 06/02/17
NOT VALID UNLESS SIGNED

FORMATION ENVIRONMENTAL

DESIGNED BY:	JHR
DRAWN BY:	JAY
CHECKED BY:	BGH
APPROVED BY:	BGH
FILE NAME:	C7.2 - South Central Runoff Ditch P&P.DWG

J.R. SIMPLOT COMPANY - SMOKY CANYON MINE

POLE CANYON ODA-NTCRA

SOUTH CENTRAL RUNOFF DITCH/CHUTE
PLAN AND PROFILE

DATE JUNE 2017 | DWG. NO. 009-001-C7.2 | REVISION AB2

E:\JYS Technical\Formation Environmental\Pole Canyon\Drawings\As-Built Drawings\C7.2 - South Central Runoff Ditch P&P_AB.dwg 5/31/2017 10:47 PM

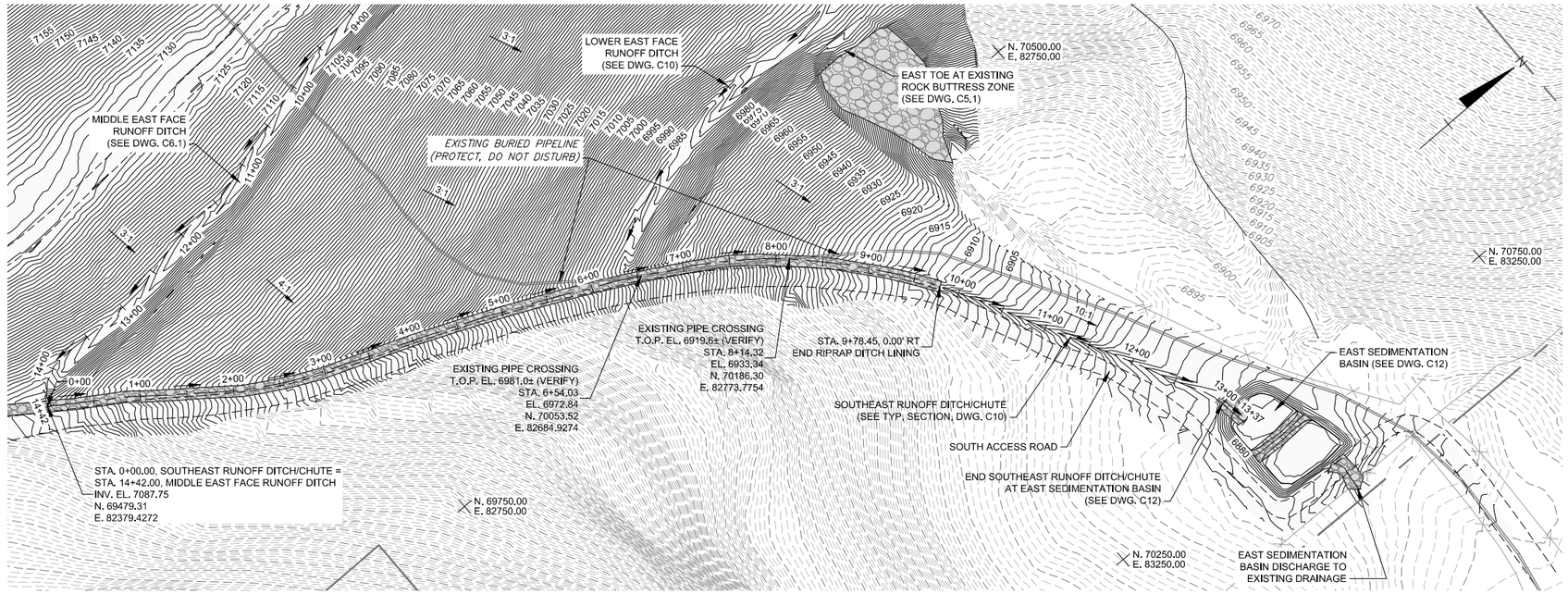

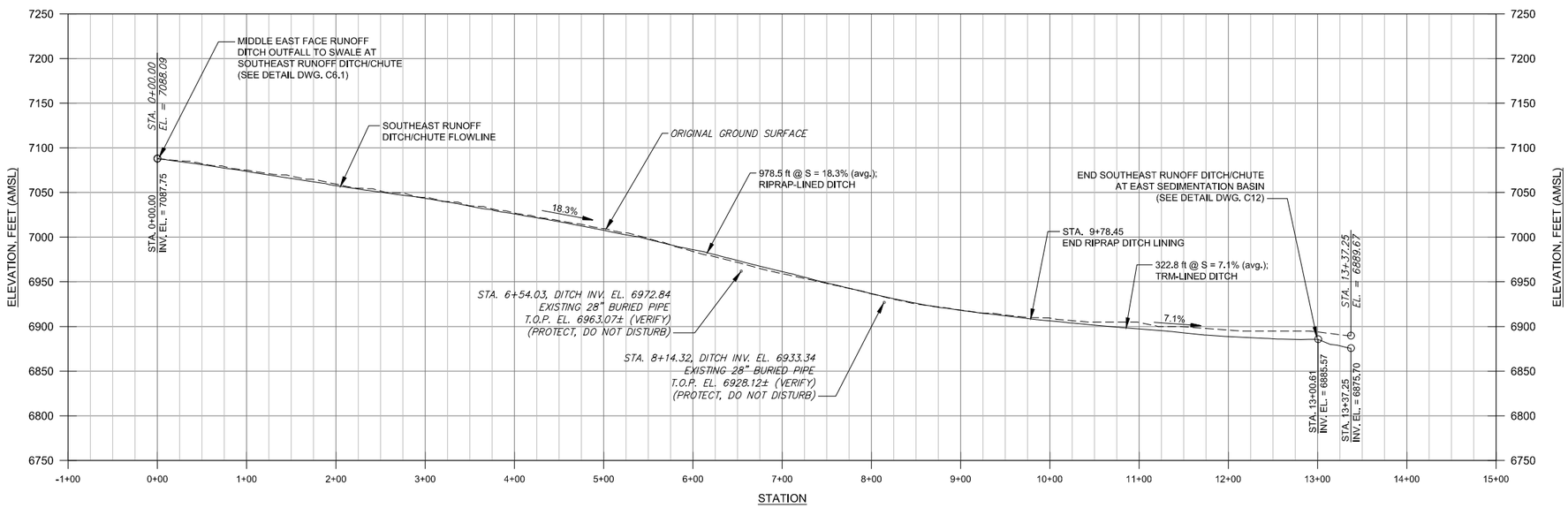

HORIZ. SCALE
75 0 75 FEET

VERT. SCALE
75 0 75 FEET

REFERENCE	NO.	REVISIONS	BY	DATE
	AB2	REVISED AS-BUILT	BGH	06/17
	AB	AS-BUILT	BGH	01/17
	3	INTERIM AS-BUILT	BGH	01/16
	2	ISSUE FOR BID AND CONSTRUCTION	BGH	12/14
	1	ISSUE FOR FINAL REVIEW	BGH	08/14
	0	ISSUE FOR 90% REVIEW	BGH	06/14

KEY MAP

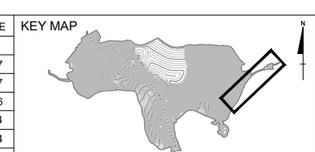

ORIGINAL SIGNED BY: BRIAN G. HANSEN
PROFESSIONAL ENGINEER REGISTERED STATE OF IDAHO BRIAN G. HANSEN 06/02/17
NOT VALID UNLESS SIGNED

FORMATION ENVIRONMENTAL

DESIGNED BY:	JHR
DRAWN BY:	JAY
CHECKED BY:	BGH
APPROVED BY:	BGH
FILE NAME:	C7.3 - Southeast Runoff Ditch P&P.DWG

J.R. SIMPLOT COMPANY - SMOKY CANYON MINE

POLE CANYON ODA-NTCRA

SOUTH EAST RUNOFF DITCH/CHUTE PLAN AND PROFILE

DATE JUNE 2017 | DWG. NO. 009-001-C7.3 | REVISION AB2

E:\JYS Technical\Formation Environmental\Pole Canyon\Drawings\As-Built Drawings\C7.3 - Southeast Runoff Ditch P&P_AB.dwg 5/31/2017 10:58 PM

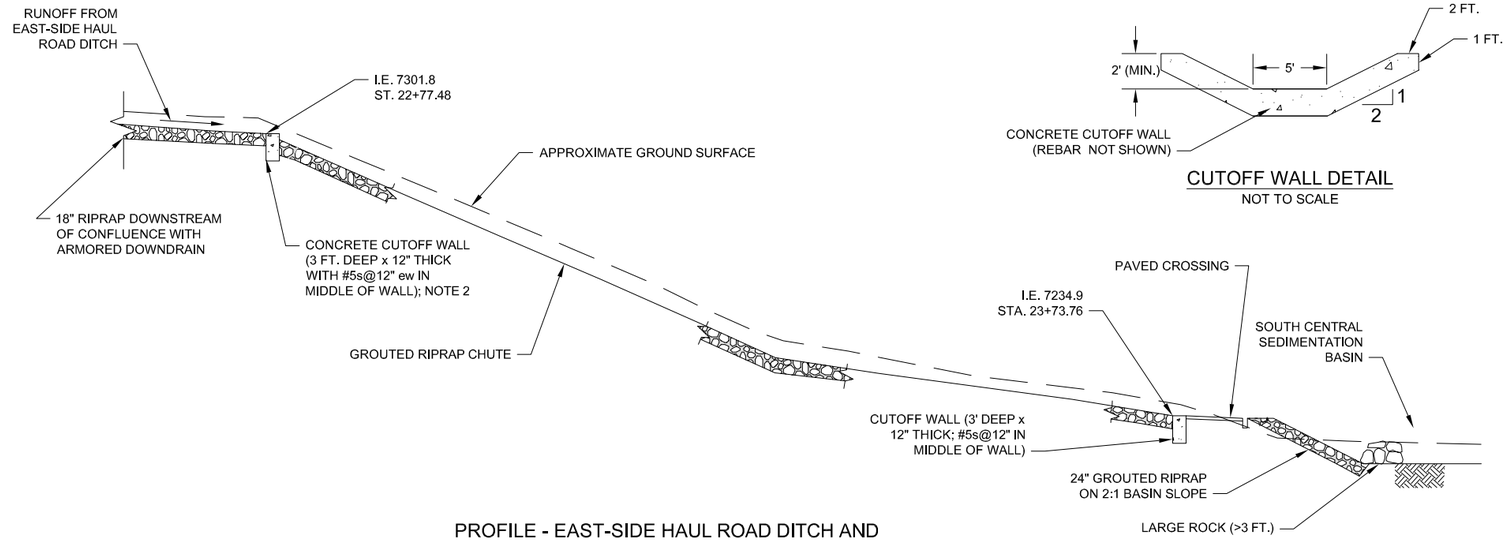

PROFILE - EAST-SIDE HAUL ROAD DITCH AND
UPPER EAST-SIDE CHUTE TO SOUTH CENTRAL SEDIMENTATION BASIN

NOT TO SCALE

CUTOFF WALL DETAIL

NOT TO SCALE

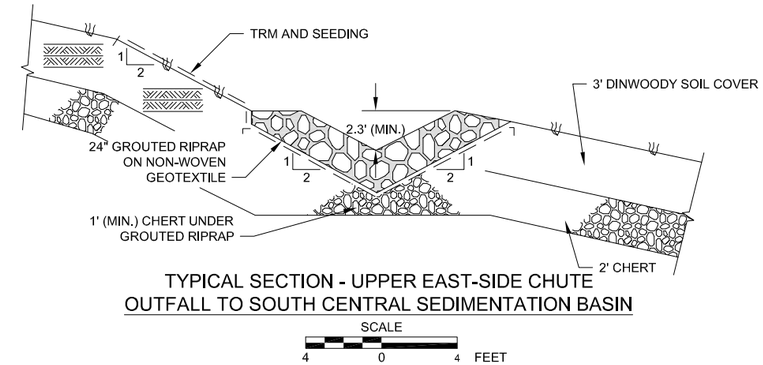

TYPICAL SECTION - UPPER EAST-SIDE CHUTE
OUTFALL TO SOUTH CENTRAL SEDIMENTATION BASIN

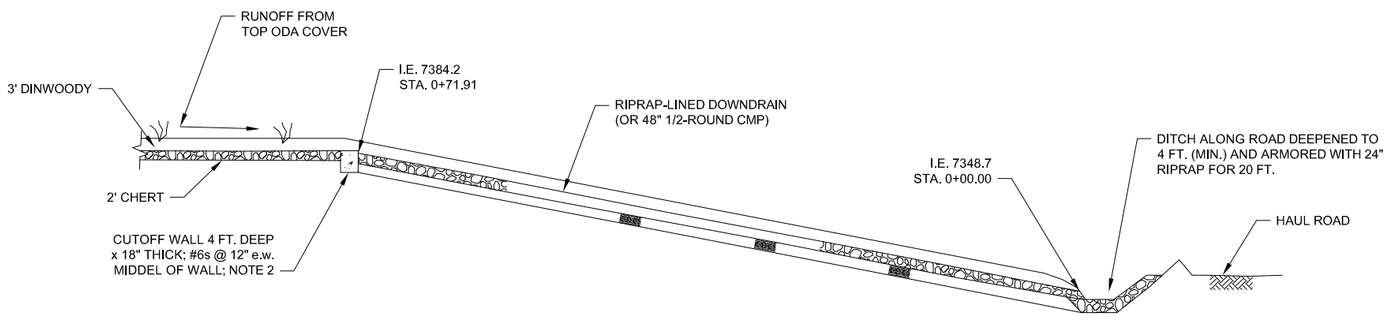

PROFILE - ARMORED DOWNDRAIN FROM TOP AREA

NOT TO SCALE

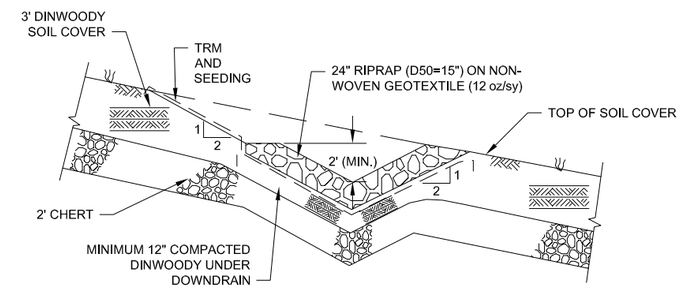

TYPICAL SECTION - ARMORED DOWNDRAIN FROM TOP AREA (EAST-SIDE)

(SEE DWG. C1)

SCALE

4 0 4 FEET

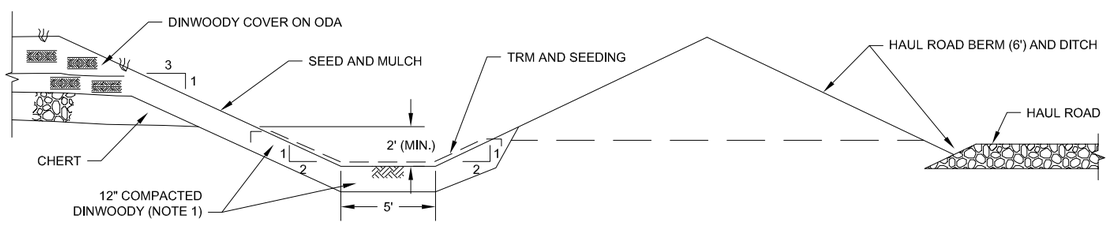

TYPICAL SECTION - EAST-SIDE HAUL ROAD DITCH UPSTREAM OF
CONFLUENCE WITH ARMORED DOWNDRAIN

SCALE

4 0 4 FEET

NOTES:

1. EAST-SIDE HAUL ROAD DITCH BELOW CONFLUENCE WITH ARMORED DOWNDRAIN HAS 18" RIPRAP (D50=12") WITH NW GEOTEXTILE (12 OZ/SY); DITCH HAS 12" COMPACTED UNDERLYING DINWOODY WHERE LOCATED OVER ODA MATERIAL.
2. CUTOFF WALLS EXTEND ACROSS THE FULL WIDTH OF DRAINAGE DITCHES TO TOP OF EACH DITCH AS APPLICABLE.

REFERENCE	NO.	REVISIONS	BY	DATE
	AB	AS-BUILT	BGH	01/17
	3	ISSUE FOR BID AND CONSTRUCTION	BGH	12/14
	2	ISSUE FOR FINAL REVIEW	BGH	08/14
	1	ISSUE FOR 90% REVIEW	BGH	06/14
	0	ISSUE FOR REVIEW	BGH	02/14

KEY MAP

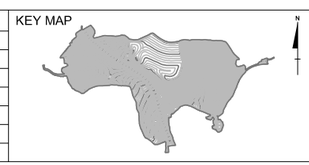

ORIGINAL SIGNED BY: BRIAN G. HANSEN

PROFESSIONAL ENGINEER REGISTERED STATE OF IDAHO BRIAN G. HANSEN 01/27/17

NOT VALID UNLESS SIGNED

FORMATION ENVIRONMENTAL

DESIGNED BY:	JHR
DRAWN BY:	SCG
CHECKED BY:	BGH
APPROVED BY:	BGH
FILE NAME:	009-004-C8.DWG

J.R. SIMPLOT COMPANY - SMOKY CANYON MINE

POLE CANYON ODA-NTCRA

EAST-SIDE RUNOFF DITCH -
SECTIONS AND PROFILES

DATE	JANUARY 2017	DWG. NO.	009-004-C8	REVISION	AB

E:\JYS Technical\Formation Environmental\Pole Canyon\Drawings\As-Built Drawings\SCG_CAD Files\C8 - Standard\C8.dwg 1/16/2017 7:28 PM

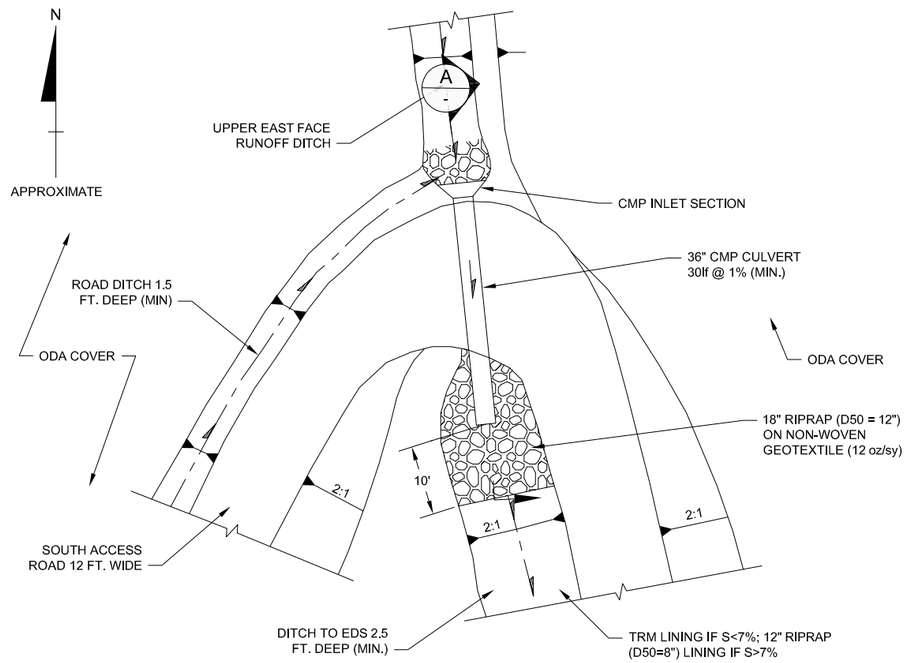

PLAN - CULVERT AT SOUTH ACCESS ROAD SWITCHBACK

(SEE DWG. C2)
NOT TO SCALE

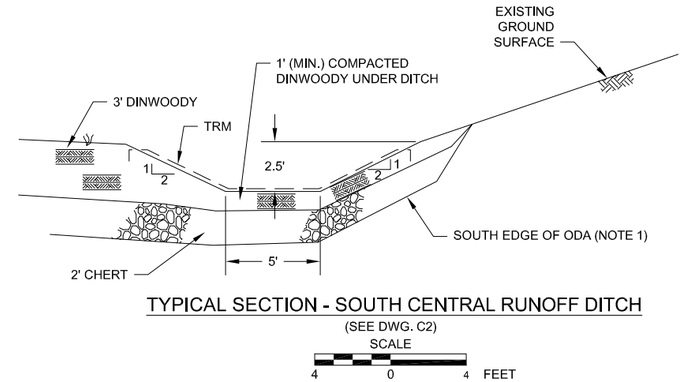

TYPICAL SECTION - SOUTH CENTRAL RUNOFF DITCH

(SEE DWG. C2)
SCALE

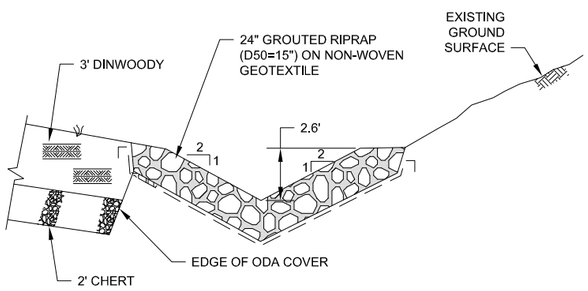

TYPICAL SECTION - SOUTH CENTRAL CHUTE TO EDS

(SEE DWG. C2)
SCALE

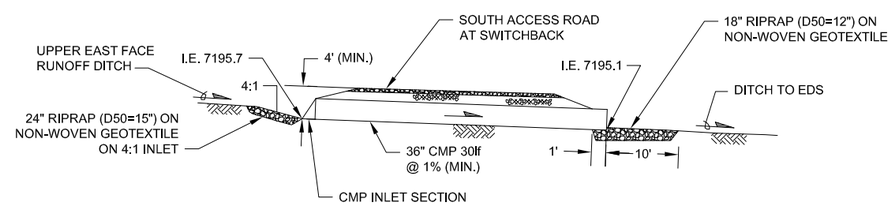

PROFILE A - CULVERT AT SOUTH ACCESS ROAD SWITCHBACK

NOT TO SCALE

NOTES:

1. PORTIONS OF SOUTH CENTRAL RUNOFF DITCH OUTSIDE LIMITS OF ODA COVER DO NOT REQUIRE DINWOODY AND CHERT UNDER DITCH.

REFERENCE	NO.	REVISIONS	BY	DATE
	AB	AS-BUILT	BGH	01/17
	3	ISSUE FOR BID AND CONSTRUCTION	BGH	12/14
	2	ISSUE FOR FINAL REVIEW	BGH	08/14
	1	ISSUE FOR 90% REVIEW	BGH	06/14
	0	ISSUE FOR REVIEW	BGH	02/14

KEY MAP

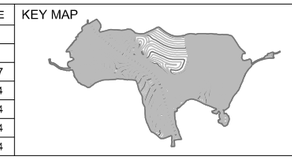

ORIGINAL SIGNED BY: BRIAN G. HANSEN

PROFESSIONAL ENGINEER REGISTERED 01/27/17 STATE OF IDAHO BRIAN G. HANSEN

NOT VALID UNLESS SIGNED

FORMATION ENVIRONMENTAL

DESIGNED BY:	JHR
DRAWN BY:	SCG
CHECKED BY:	BGH
APPROVED BY:	BGH
FILE NAME:	009-004-C9 .DWG

J.R. SIMPLOT COMPANY - SMOKY CANYON MINE

POLE CANYON ODA-NTCRA

EAST-SIDE RUNOFF DIVERSION DITCH - SECTIONS AND DETAILS

DATE	JANUARY 2017	DWG. NO.	009-004-C9	REVISION	AB

E:\JVS Technical\Formation Environmental\Pole Canyon\Drawings\As-Built Drawings\SCG_CAD Files\C9 - Standard\C9.dwg 1/16/2017 7:32 PM

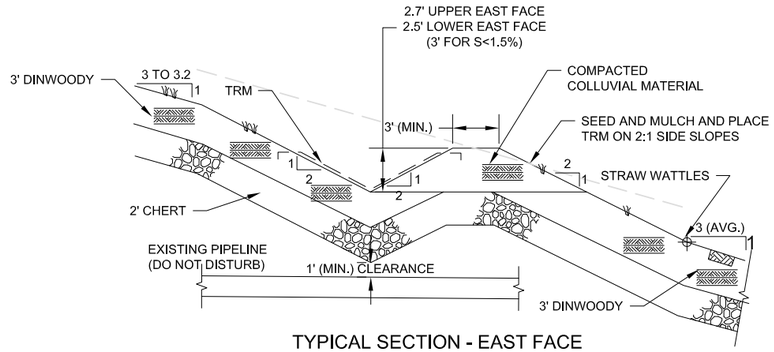

TYPICAL SECTION - EAST FACE
RUNOFF DITCHES
(SEE DWG. C2)
SCALE
5 0 5 FEET

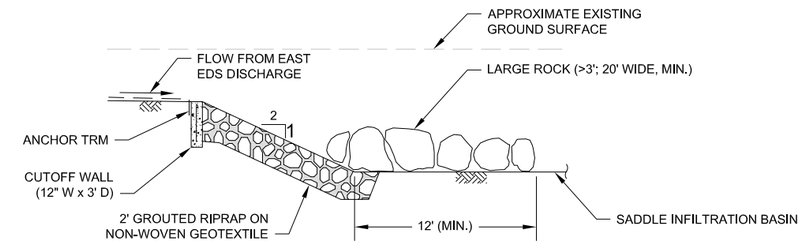

PROFILE - OUTFALL TO SADDLE INFILTRATION BASIN
(SEE NOTE 2)
SCALE
5 0 5 FEET

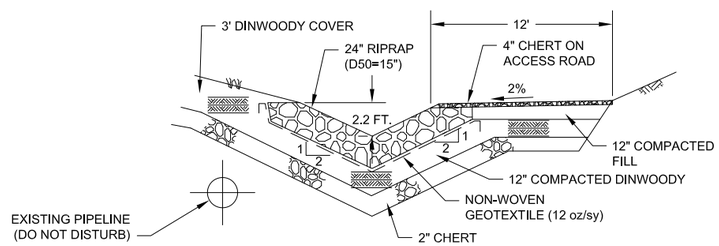

TYPICAL SECTION - SOUTHEAST RUNOFF DITCH/CHUTE
(GRADES >12%)
(SEE DWG. C2)
SCALE
5 0 5 FEET

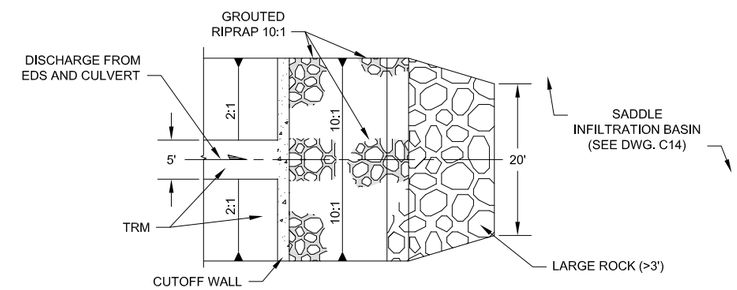

PLAN OF OUTFALL
(SEE NOTE 2)
SCALE
10 0 10 FEET

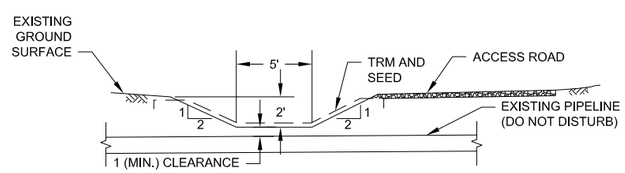

TYPICAL SECTION - SOUTHEAST RUNOFF DITCH - LOWER REACH
BELOW EAST TOE (GRADES 5% TO 8%)
(SEE DWG. C2)
SCALE
5 0 5 FEET

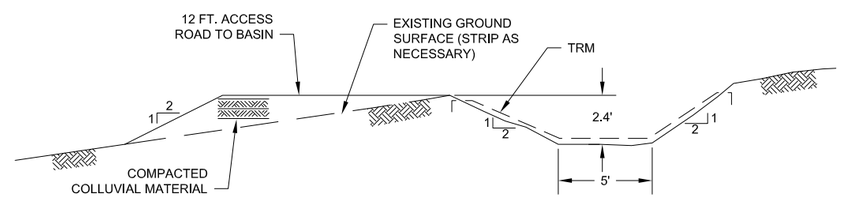

DITCH FROM EDS TO SADDLE INFILTRATION BASIN (NOTE 3)
SCALE
4 0 4 FEET

NOTES:

1. APPROVED COMMERCIALLY AVAILABLE DITCH LINING SYSTEMS MAY BE USED IN PLACE OF ACM OR GROUTED RIPRAP (SUCH AS SMARTDITCH).
2. PLAN AND SECTIONS OF SADDLE INFILTRATION BASIN ARE SHOWN ON DWG. C14.
3. IF GRADIENT OF DITCH FROM EDS TO SADDLE BASIN IS >8%, USE 18" RIPRAP IN DITCH (D50=12") ON NW GEOTEXTILE.

REFERENCE	NO.	REVISIONS	BY	DATE
	3	ISSUE FOR BID AND CONSTRUCTION	BGH	12/14
	2	ISSUE FOR FINAL REVIEW	BGH	08/14
	1	ISSUE FOR 90% REVIEW	BGH	06/14
	0	ISSUE FOR REVIEW	BGH	02/14

ORIGINAL SIGNED BY: BRIAN G. HANSEN
PROFESSIONAL ENGINEER REGISTERED 9074 STATE OF IDAHO BRIAN G. HANSEN 12/31/14
NOT VALID UNLESS SIGNED

FORMATION ENVIRONMENTAL

DESIGNED BY:	JHR
DRAWN BY:	SCG
CHECKED BY:	BGH
APPROVED BY:	BGH
FILE NAME:	009-004-C10 .DWG

J.R. SIMPLOT COMPANY - SMOKY CANYON MINE
POLE CANYON ODA NTCRA
EAST-SIDE RUNOFF DIVERSION
DITCH AND OUTFALL SECTIONS

DATE DECEMBER 2014 | DWG. NO. 009-004-C10 | REVISION 3

C:\Users\Steve\Documents\Formations\Smoky Pole Canyon\Sheet Files\Final – Aug 2014\C10.dwg 1/6/2015 10:13 PM

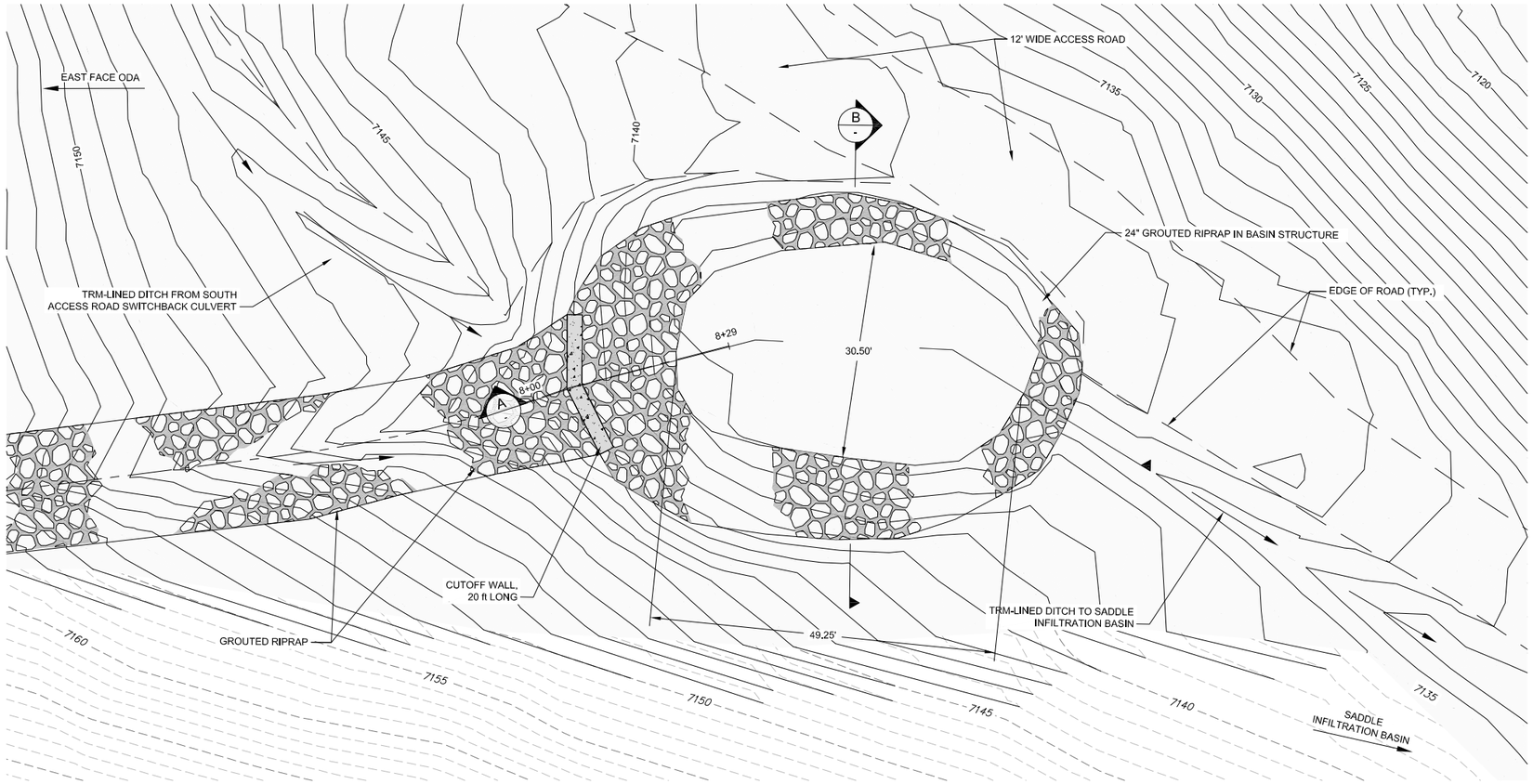

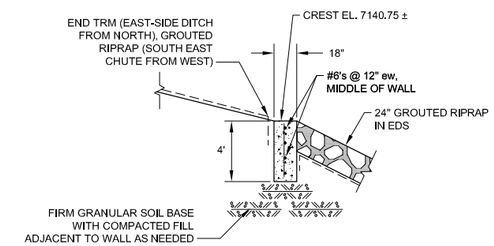

CUTOFF WALL DETAIL

N.T.S.

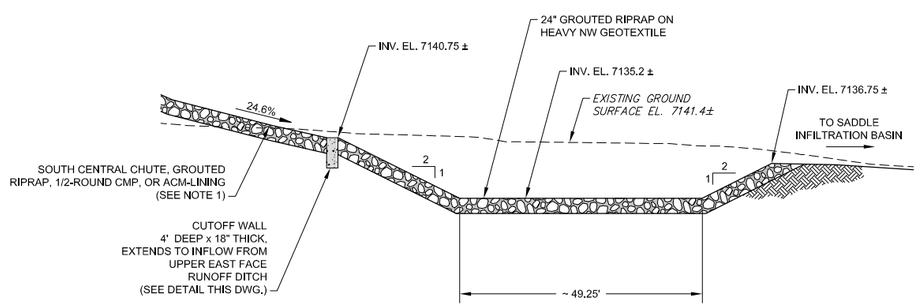

SECTION A

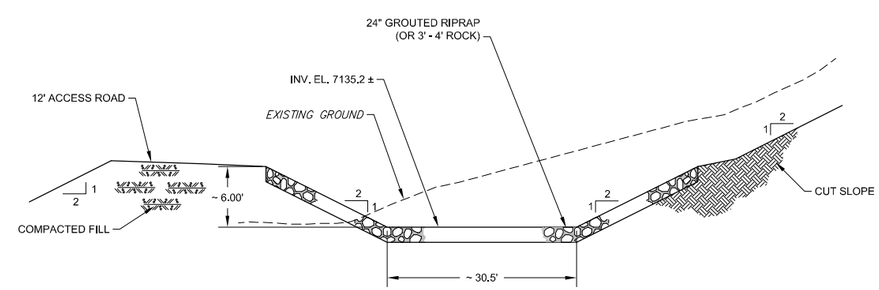

SECTION B

HORIZ. SCALE
10 0 10 FEET

VERT. SCALE
10 0 10 FEET

REFERENCE	NO.	REVISIONS	BY	DATE
	AB	AS-BUILT	BGH	01/17
	3	INTERIM AS-BUILT	BGH	01/16
	2	ISSUE FOR BID AND CONSTRUCTION	BGH	12/14
	1	ISSUE FOR FINAL REVIEW	BGH	08/14
	0	ISSUE FOR 90% REVIEW	BGH	06/14

KEY MAP

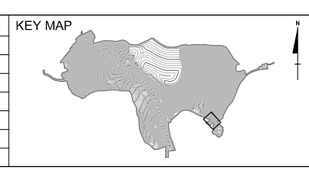

ORIGINAL SIGNED BY: BRIAN G. HANSEN
PROFESSIONAL ENGINEER REGISTERED 01/27/17 STATE OF IDAHO BRIAN G. HANSEN
NOT VALID UNLESS SIGNED

FORMATION ENVIRONMENTAL

DESIGNED BY:	JHR
DRAWN BY:	JAY
CHECKED BY:	BGH
APPROVED BY:	BGH
FILE NAME:	C11 - East-side EDS.DWG

J.R. SIMPLOT COMPANY - SMOKY CANYON MINE

POLE CANYON ODA-NTCRA

EAST ENERGY DISSIPATION STRUCTURE PLAN AND SECTIONS

DATE JANUARY 2017 | DWG. NO. 009-001-C11 | REVISION AB

E:\JYS Technical\Formation Environmental\Pole Canyon\Drawings\As-Built Drawings\C11 - East-Side EDS_AB.dwg 1/10/2017 11:20 AM

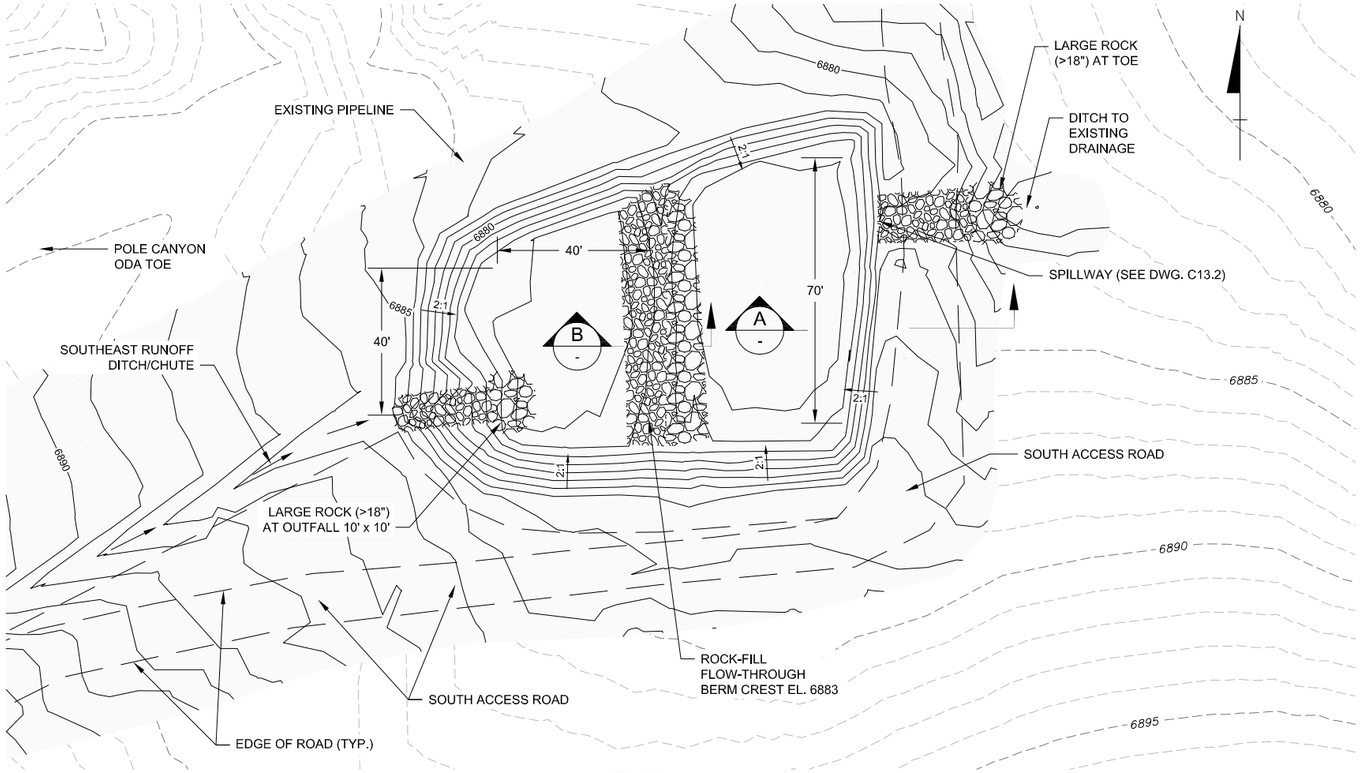

PLAN
EAST SEDIMENTATION BASIN

SCALE
20 0 20 FEET

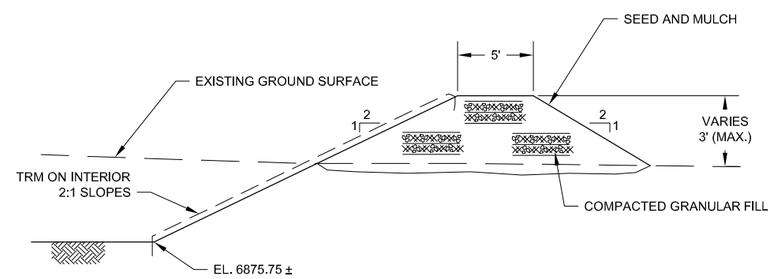

SECTION A

SCALE
5 0 5 FEET

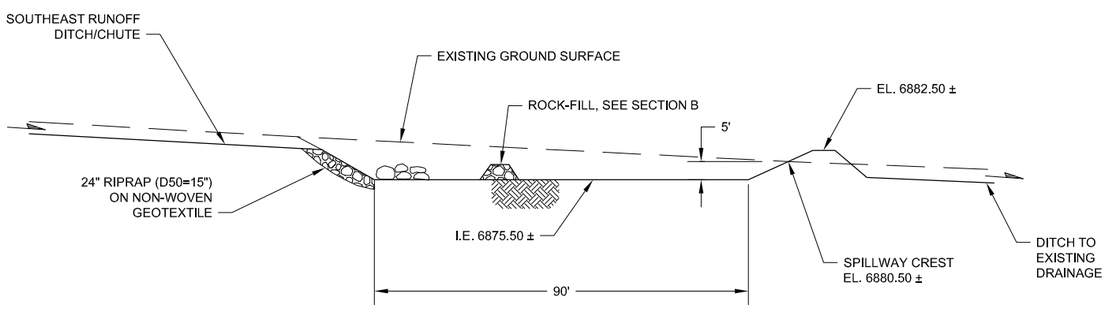

PROFILE
EAST SEDIMENTATION BASIN

TO TO SCALE

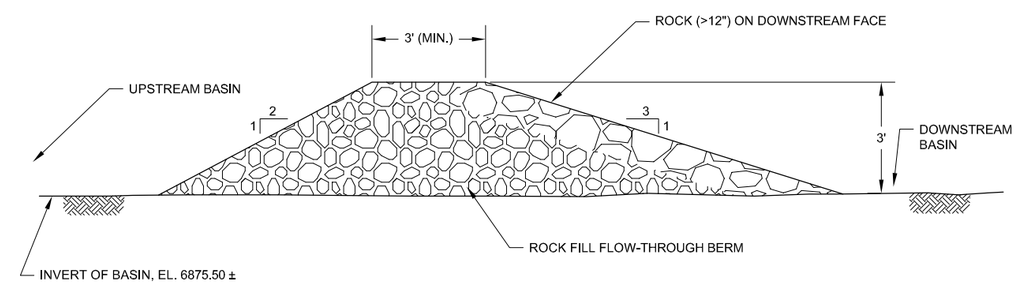

SECTION B

SCALE
2 0 2 FEET

REFERENCE	NO.	REVISIONS	BY	DATE
	AB	AS-BUILT	BGH	01/17
	3	INTERIM AS-BUILT	BGH	01/16
	2	ISSUE FOR BID AND CONSTRUCTION	BGH	12/14
	1	ISSUE FOR FINAL REVIEW	BGH	08/14
	0	ISSUE FOR 90% REVIEW	BGH	06/14

KEY MAP

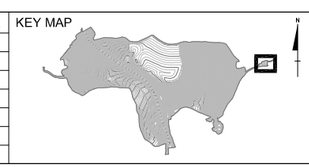

ORIGINAL SIGNED BY: BRIAN G. HANSEN
PROFESSIONAL ENGINEER REGISTERED STATE OF IDAHO BRIAN G. HANSEN 01/27/17
NOT VALID UNLESS SIGNED

FORMATION ENVIRONMENTAL

DESIGNED BY:	JHR
DRAWN BY:	JAY
CHECKED BY:	BGH
APPROVED BY:	BGH
FILE NAME:	C12 - East-Side Sed Basin.DWG

J.R. SIMPLOT COMPANY - SMOKY CANYON MINE

POLE CANYON ODA-NTCRA

EAST SEDIMENTATION BASIN - PLAN AND SECTIONS

DATE	JANUARY 2017	DWG. NO.	009-001-C12	REVISION	AB

E:\JYS Technical\Formation Environmental\Pole Canyon\Drawings\As-Built Drawings\C12 - East-Side Sed Basin_AB.dwg 1/2/2017 8:35 PM

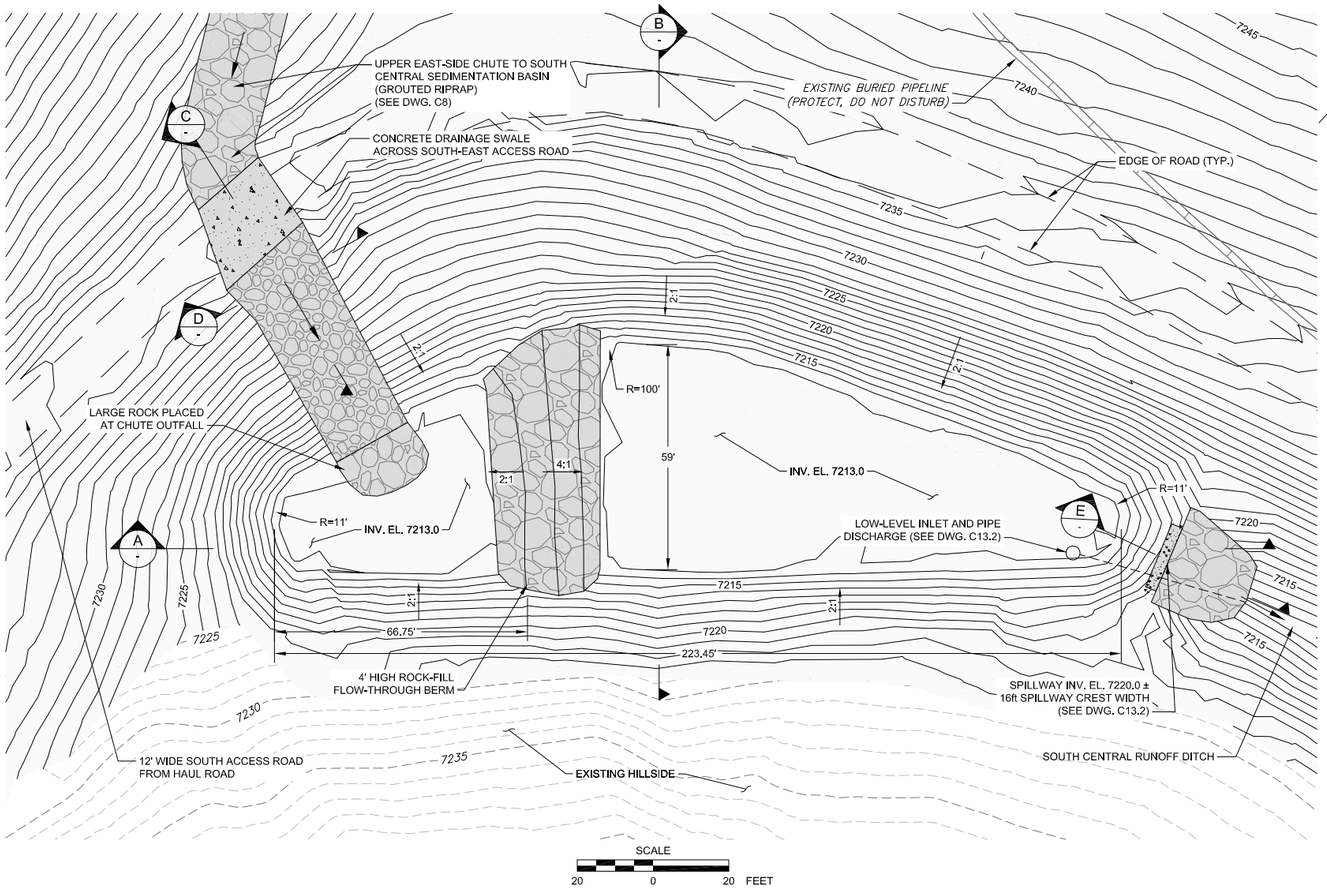

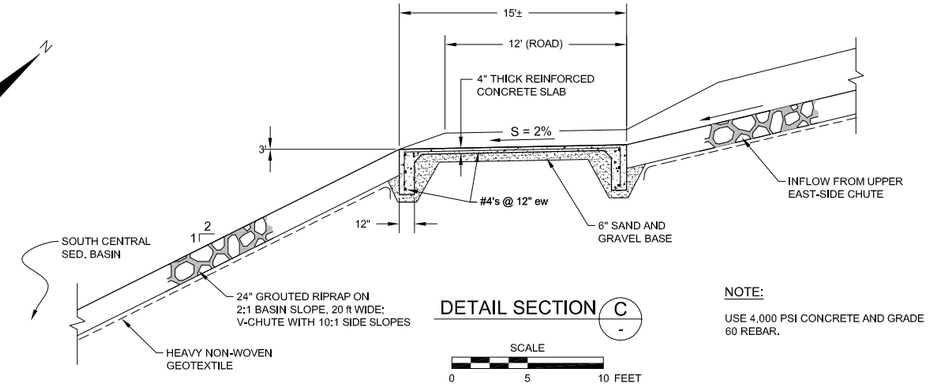

DETAIL SECTION C

NOTE:

USE 4,000 PSI CONCRETE AND GRADE 60 REBAR.

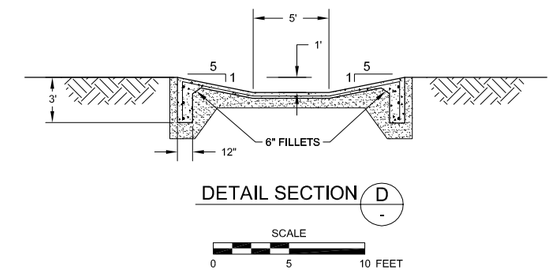

DETAIL SECTION D

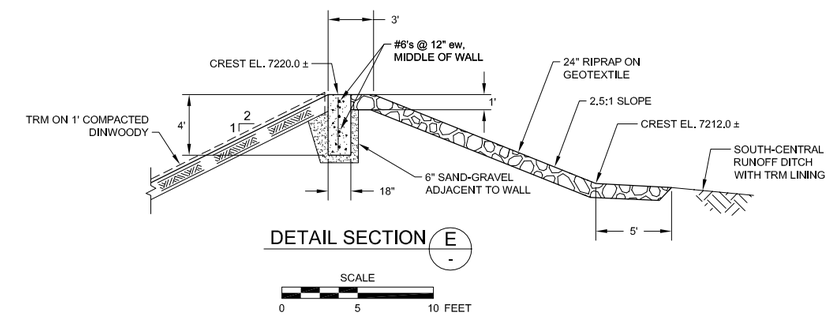

DETAIL SECTION E

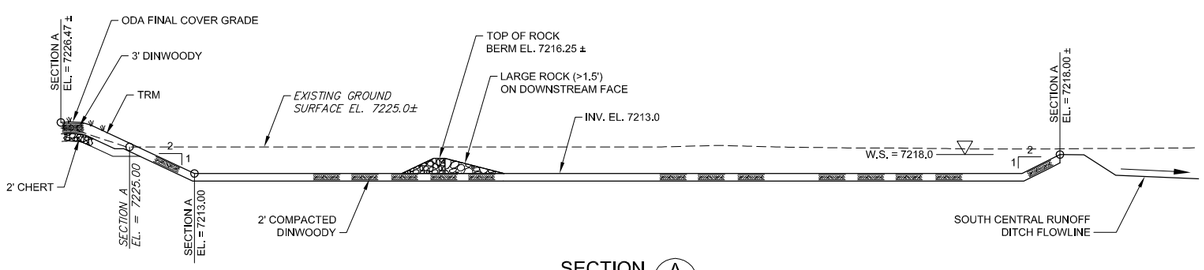

SECTION A

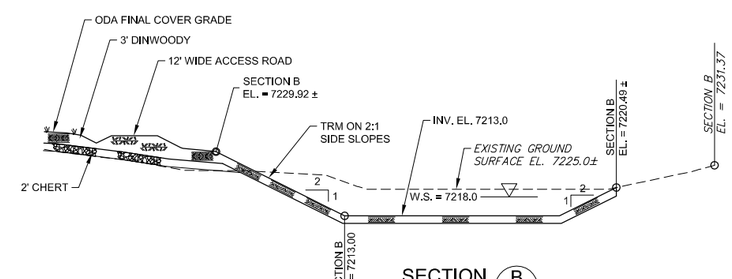

SECTION B

REFERENCE	NO.	REVISIONS	BY	DATE
	AB	AS-BUILT	BGH	01/17
	3	INTERIM AS-BUILT	BGH	01/16
	2	ISSUE FOR BID AND CONSTRUCTION	BGH	12/14
	1	ISSUE FOR FINAL REVIEW	BGH	08/14
	0	ISSUE FOR 90% REVIEW	BGH	06/14

KEY MAP

ORIGINAL SIGNED BY: BRIAN G. HANSEN

PROFESSIONAL ENGINEER REGISTERED 01/27/17 STATE OF IDAHO BRIAN G. HANSEN

NOT VALID UNLESS SIGNED

FORMATION ENVIRONMENTAL

DESIGNED BY:	JHR
DRAWN BY:	JAY
CHECKED BY:	BGH
APPROVED BY:	BGH
FILE NAME: C13 - South-Central Sedimentation Basin.DWG	

J.R. SIMPLOT COMPANY - SMOKY CANYON MINE

POLE CANYON ODA-NTCRA

SOUTH CENTRAL SEDIMENTATION BASIN PLAN AND SECTIONS

DATE JANUARY 2017 | DWG. NO. 009-001-C13 | REVISION AB

E:\YIS Technical\Formation Environmental\Pole Canyon\Drawings\As-Built Drawings\C13 - South-Central Sedimentation Basin_AB.dwg 1/6/2017 12:28 PM

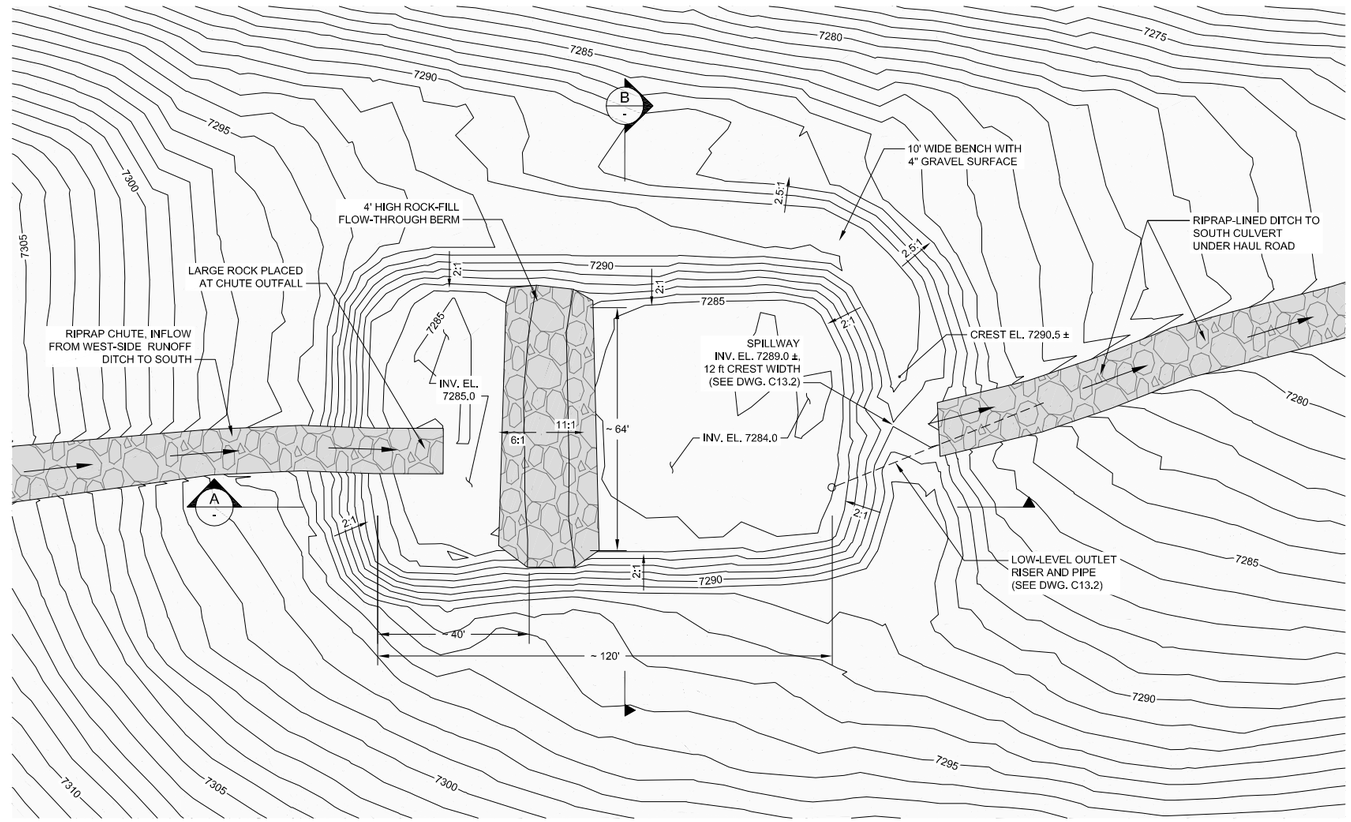

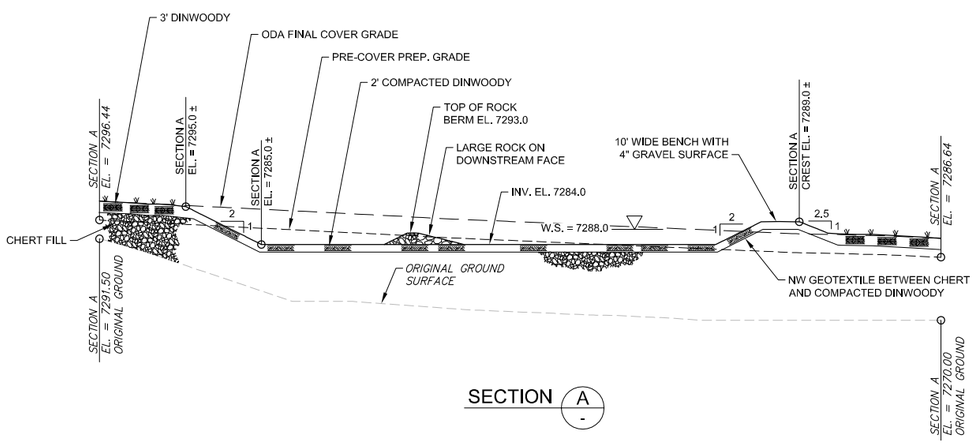

SECTION A

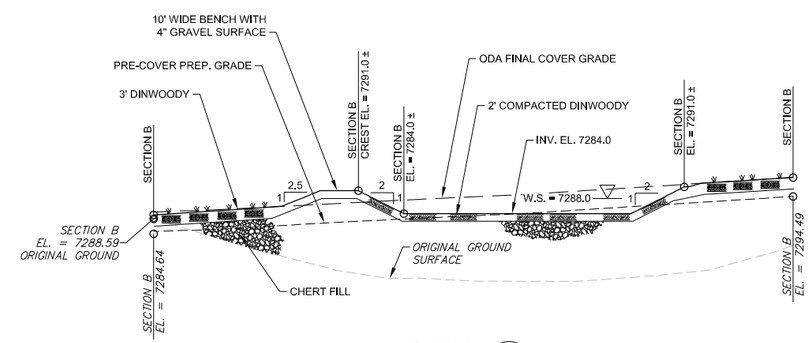

SECTION B

HORIZ. SCALE
20 0 20 FEET

VERT. SCALE
20 0 20 FEET

REFERENCE	NO.	REVISIONS	BY	DATE
	AB	AS-BUILT	BGH	01/17
	3	INTERIM AS-BUILT	BGH	01/16
	2	ISSUE FOR BID AND CONSTRUCTION	BGH	12/14
	1	ISSUE FOR FINAL REVIEW	BGH	08/14
	0	ISSUE FOR 90% REVIEW	BGH	06/14

KEY MAP

ORIGINAL SIGNED BY: BRIAN G. HANSEN

PROFESSIONAL ENGINEER REGISTERED STATE OF IDAHO BRIAN G. HANSEN 01/27/17

NOT VALID UNLESS SIGNED

FORMATION ENVIRONMENTAL

DESIGNED BY:	JHR
DRAWN BY:	JAY
CHECKED BY:	BGH
APPROVED BY:	BGH
FILE NAME: C13.1 - West-Side South Sedimentation Basin.DWG	

J.R. SIMPLOT COMPANY - SMOKY CANYON MINE

POLE CANYON ODA-NTCRA

WEST-SIDE SOUTH SEDIMENTATION BASIN PLAN AND SECTIONS

DATE	JANUARY 2017	DWG. NO. 009-001-C13.1	REVISION	AB

E:\JYS Technical\Formation Environmental\Pole Canyon\Drawings\As-Built Drawings\C13.1 - West-Side South Sedimentation Basin_AB.dwg 1/6/2017 1:04 PM

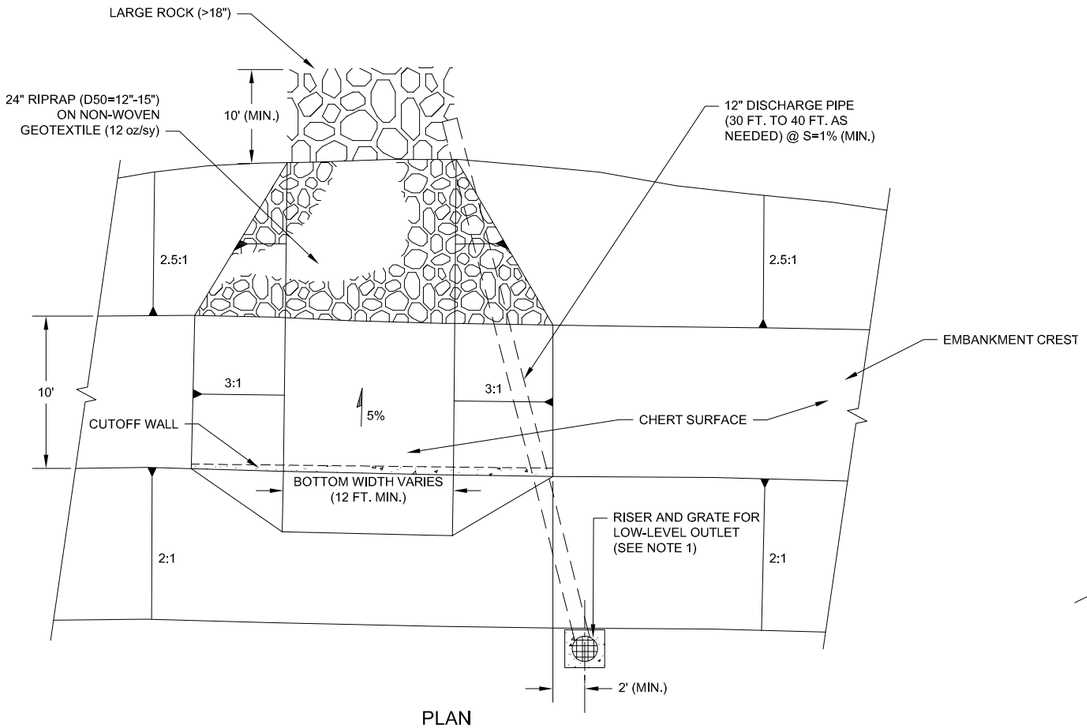

PLAN
TYPICAL SPILLWAY AND LOW-LEVEL OUTLET

SCALE
5 0 5 FEET

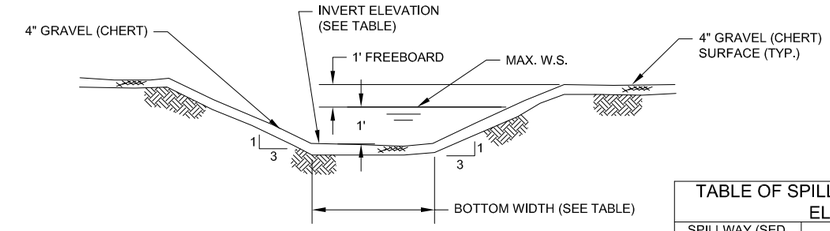

TYPICAL SECTION SPILLWAY
NOT TO SCALE

TABLE OF SPILLWAY DIMENSIONS AND ELEVATIONS		
SPILLWAY (SED. BASIN)	BOTTOM WIDTH	INVERT ELEVATION
WEST-SIDE SOUTH	12 FT.	7289.00
SOUTH CENTRAL	16 FT.	7220.00
EAST	12 FT.	6880.50
SADDLE INFILTRATION	22 FT.	7128.00
NORTHWEST	20 FT.	7258.75

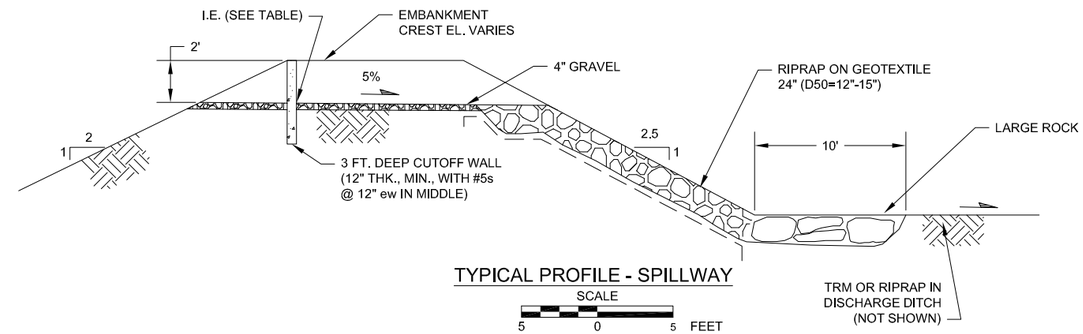

TYPICAL PROFILE - SPILLWAY
SCALE
5 0 5 FEET

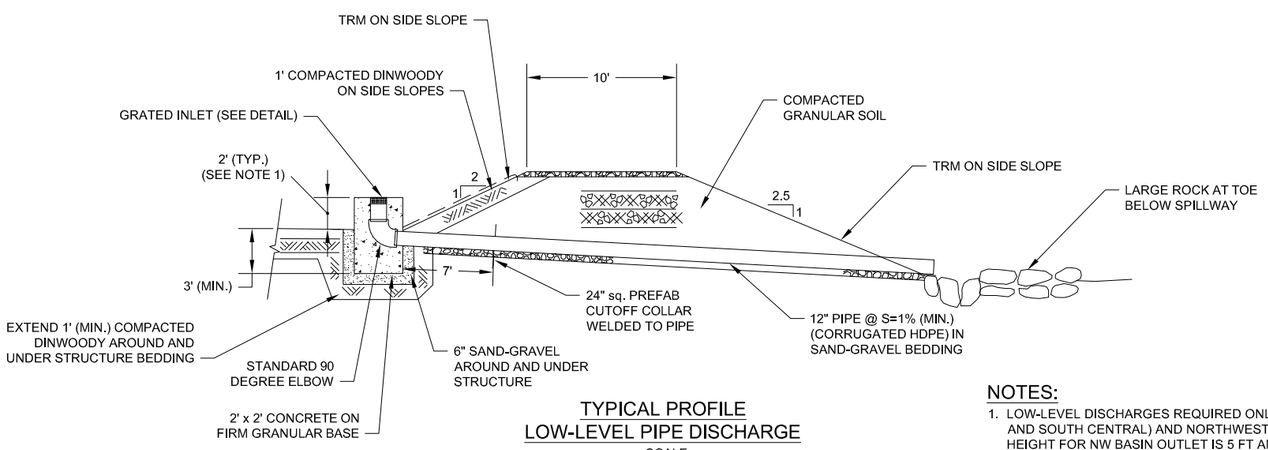

TYPICAL PROFILE
LOW-LEVEL PIPE DISCHARGE

SCALE
5 0 5 FEET

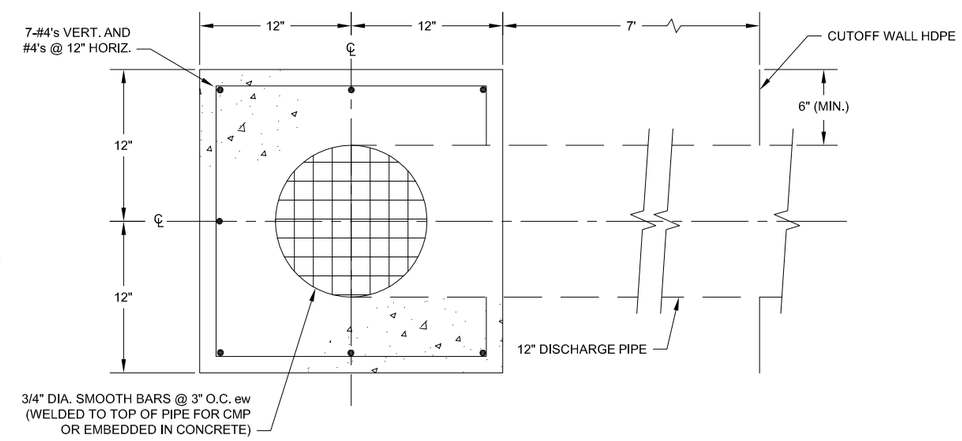

DETAIL - LOW-LEVEL INLET (NOTE 1)
SCALE
0.5 0 0.5 FEET

NOTES:

1. LOW-LEVEL DISCHARGES REQUIRED ONLY FOR THE SOUTH (WEST-SIDE AND SOUTH CENTRAL) AND NORTHWEST SEDIMENTATION BASINS. RISER HEIGHT FOR NW BASIN OUTLET IS 5 FT AND 3X3 FT RISER WITH 12-#4 VERT (SEE DWG. C21). BARS ACROSS INLET ARE EQUALLY SPACED.
2. CONCRETE WITH MINIMUM 28-DAY COMPRESSIVE STRENGTH OF 4,000 PSI, AND GRADE 60 STEEL REINFORCEMENT WAS USED. FIBER REINFORCEMENT WAS ALSO USED.
3. SPILLWAYS ARE REQUIRED FOR ALL SEDIMENTATION BASINS.

REFERENCE	NO.	REVISIONS	BY	DATE
	AB	AS-BUILT	BGH	01/17
	2	ISSUE FOR BID AND CONSTRUCTION	BGH	12/14
	1	ISSUE FOR FINAL REVIEW	BGH	08/14
	0	ISSUE FOR 90% REVIEW	BGH	06/14

KEY MAP

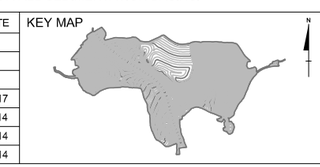

ORIGINAL SIGNED BY: BRIAN G. HANSEN
PROFESSIONAL ENGINEER REGISTERED STATE OF IDAHO BRIAN G. HANSEN 01/27/17
NOT VALID UNLESS SIGNED

FORMATION ENVIRONMENTAL

DESIGNED BY:	JHR
DRAWN BY:	SCG
CHECKED BY:	BGH
APPROVED BY:	BGH
FILE NAME:	009-004-C13.2.DWG

J.R. SIMPLOT COMPANY - SMOKY CANYON MINE

POLE CANYON ODA-NTCRA

SEDIMENTATION BASINS-SPILLWAYS AND LOW-LEVEL DISCHARGE PIPES-PLANS, SECTIONS, PROFILES, AND DETAILS

DATE JANUARY 2017 | DWG. NO. 009-004-C13.2 | REVISION AB

E:\JYS Technical\Formation Environmental\Pole Canyon\Drawings\As-Built Drawings\SCG_CAD Files\C13point2.dwg 1/25/2017 1:52 AM

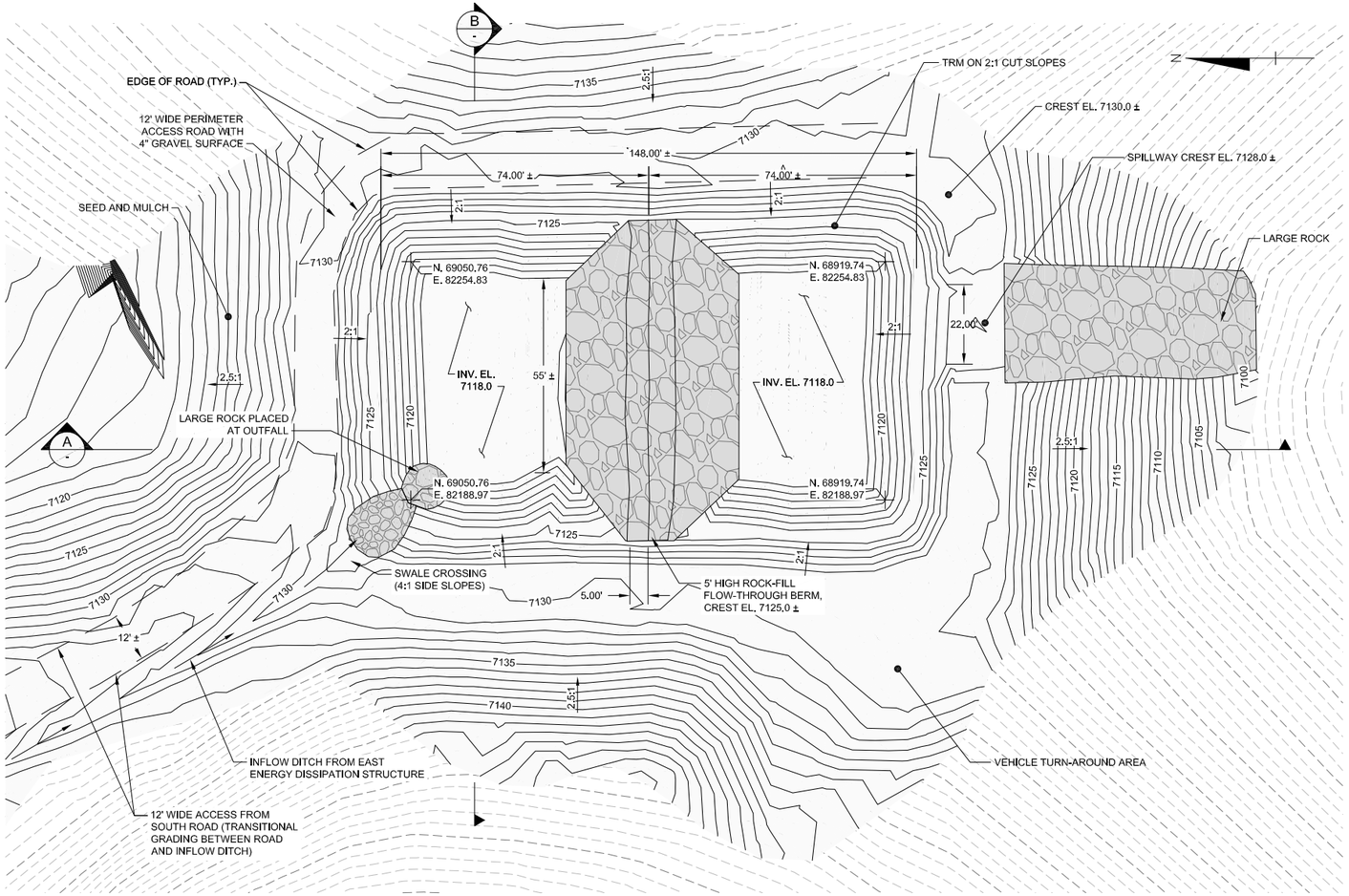

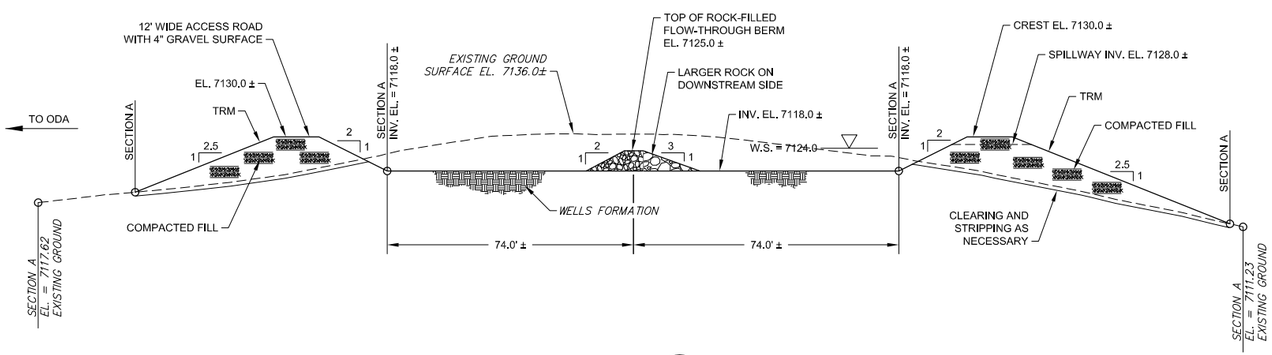

SECTION A

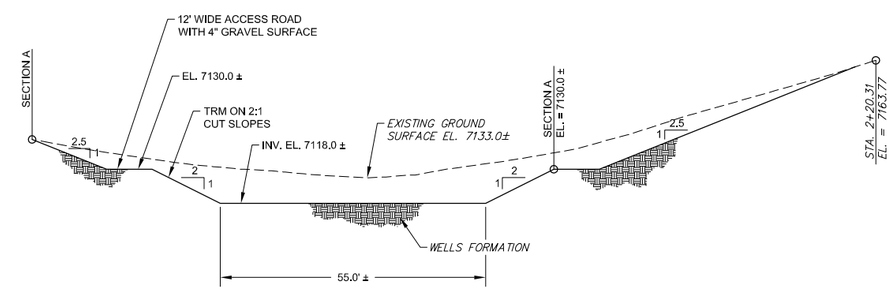

SECTION B

HORIZ. SCALE 20 0 20 FEET

VERT. SCALE 20 0 20 FEET

REFERENCE	NO.	REVISIONS	BY	DATE
	AB	AS-BUILT	BGH	01/17
	3	INTERIM AS-BUILT	BGH	01/16
	2	ISSUE FOR BID AND CONSTRUCTION	BGH	12/14
	1	ISSUE FOR FINAL REVIEW	BGH	08/14
	0	ISSUE FOR 90% REVIEW	BGH	06/14

KEY MAP

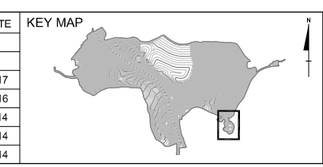

ORIGINAL SIGNED BY: BRIAN G. HANSEN

PROFESSIONAL ENGINEER REGISTERED STATE OF IDAHO 01/27/17 BRIAN G. HANSEN

NOT VALID UNLESS SIGNED

FORMATION ENVIRONMENTAL

DESIGNED BY:	JHR
DRAWN BY:	JAY
CHECKED BY:	BGH
APPROVED BY:	BGH
FILE NAME:	C14 - South-Side Infiltration Basin.DWG

J.R. SIMPLOT COMPANY - SMOKY CANYON MINE

POLE CANYON ODA-NTCRA

SADDLE INFILTRATION BASIN PLAN AND SECTIONS

DATE	JANUARY 2017	DWG. NO.	009-001-C14	REVISION	0 AB

E:\JYS Technical\Formation Environmental\Pole Canyon\Drawings\As-Built Drawings\C14 - South-Side Saddle Infiltration Basin_AB.dwg 1/6/2017 3:26 PM

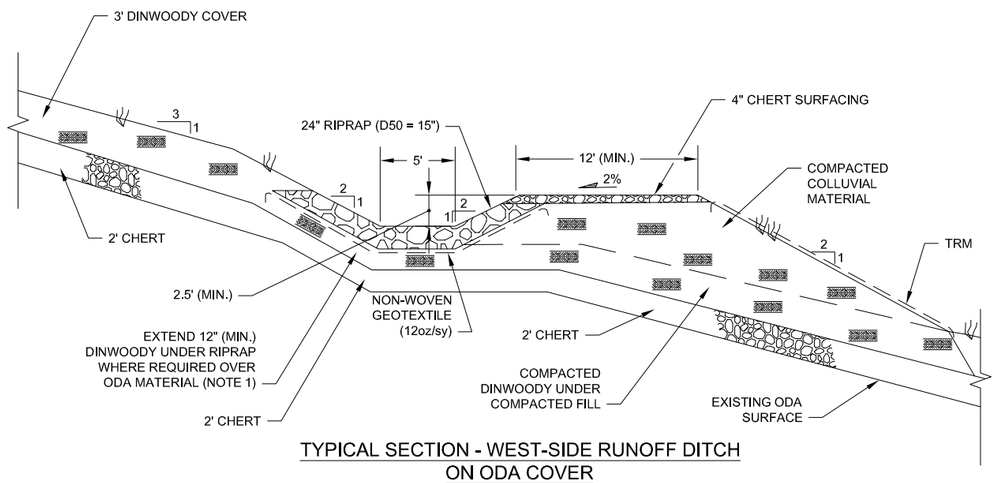

TYPICAL SECTION - WEST-SIDE RUNOFF DITCH ON ODA COVER

SCALE 5 0 5 FEET

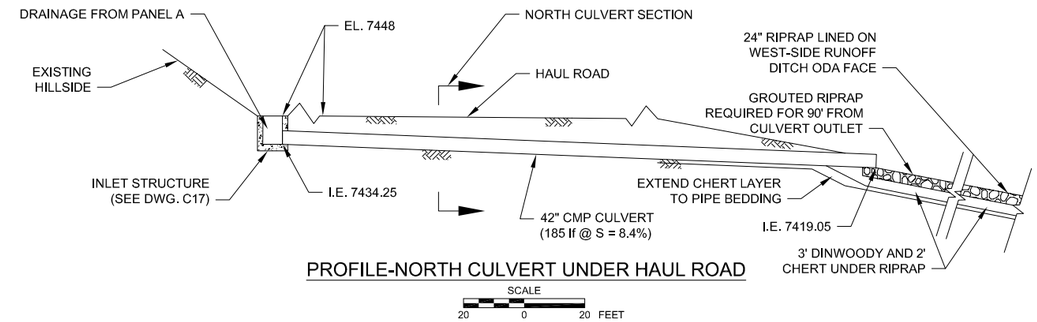

PROFILE-NORTH CULVERT UNDER HAUL ROAD

SCALE 20 0 20 FEET

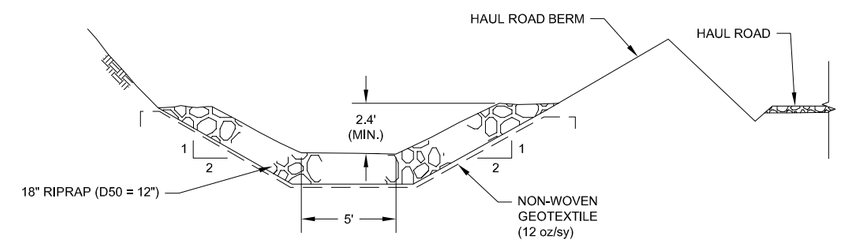

TYPICAL SECTION-PANEL A DITCH TO NORTH CULVERT INLET

SCALE 4 0 4 FEET

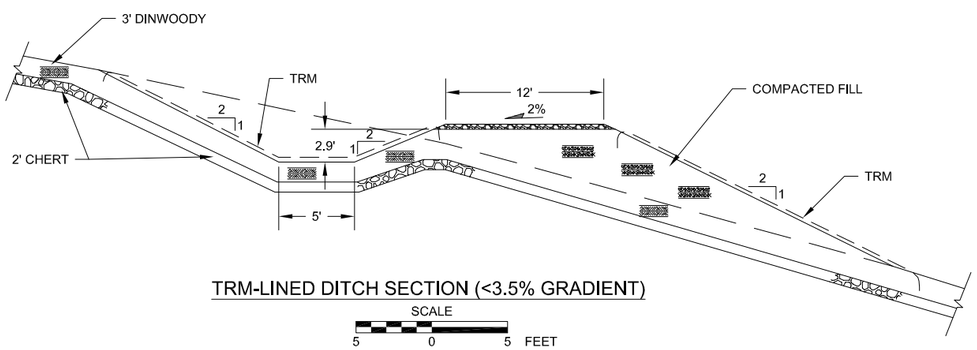

TRM-LINED DITCH SECTION (<3.5% GRADIENT)

SCALE 5 0 5 FEET

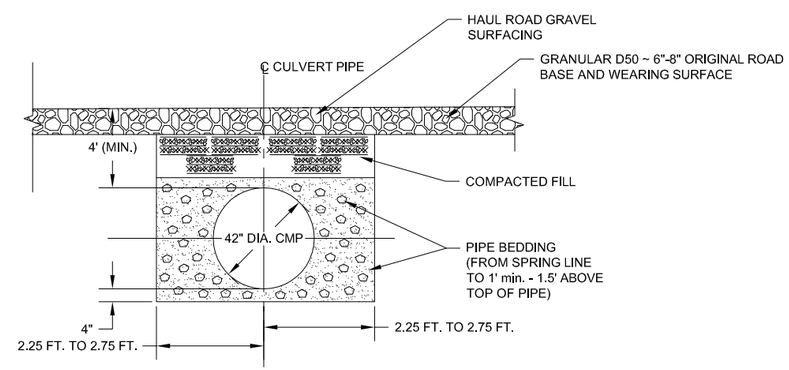

NORTH CULVERT SECTION

NOT TO SCALE

NOTES:

1. PORTION OF WEST-SIDE RUNOFF DITCH OUTSIDE OF ODA COVER ARE CONSTRUCTED IN NATIVE GROUND WITH NATIVE COMPACTED MATERIALS FOR EMBANKMENT AND DID NOT REQUIRE DINWOODY OR CHERT LAYERS SHOWN. USED SAME RIPRAP AND GEOTEXTILE SHOWN.

REFERENCE	NO.	REVISIONS	BY	DATE
	AB	AS-BUILT	BGH	01/17
	3	ISSUE FOR BID AND CONSTRUCTION	BGH	12/14
	2	ISSUE FOR FINAL REVIEW	BGH	08/14
	1	ISSUE FOR 90% REVIEW	BGH	06/14
	0	ISSUE FOR REVIEW	BGH	02/14

KEY MAP

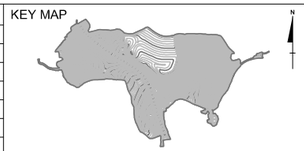

ORIGINAL SIGNED BY: BRIAN G. HANSEN

PROFESSIONAL ENGINEER REGISTERED 01/27/17 STATE OF IDAHO BRIAN G. HANSEN

NOT VALID UNLESS SIGNED

FORMATION ENVIRONMENTAL

DESIGNED BY:	JHR
DRAWN BY:	SCG
CHECKED BY:	BGH
APPROVED BY:	BGH
FILE NAME:	009-004-C15.DWG

J.R. SIMPLOT COMPANY - SMOKY CANYON MINE

POLE CANYON ODA-NTCRA

WEST-SIDE RUNOFF SYSTEM - TYPICAL SECTIONS AND DETAILS

DATE JANUARY 2017 | DWG. NO. 009-004-C15 | REVISION AB

E:\JYS Technical\Formation Environmental\Pole Canyon\Drawings\As-Built Drawings\SCG_CAD Files\C15 - Standard\C15.dwg 1/16/2017 7:35 PM

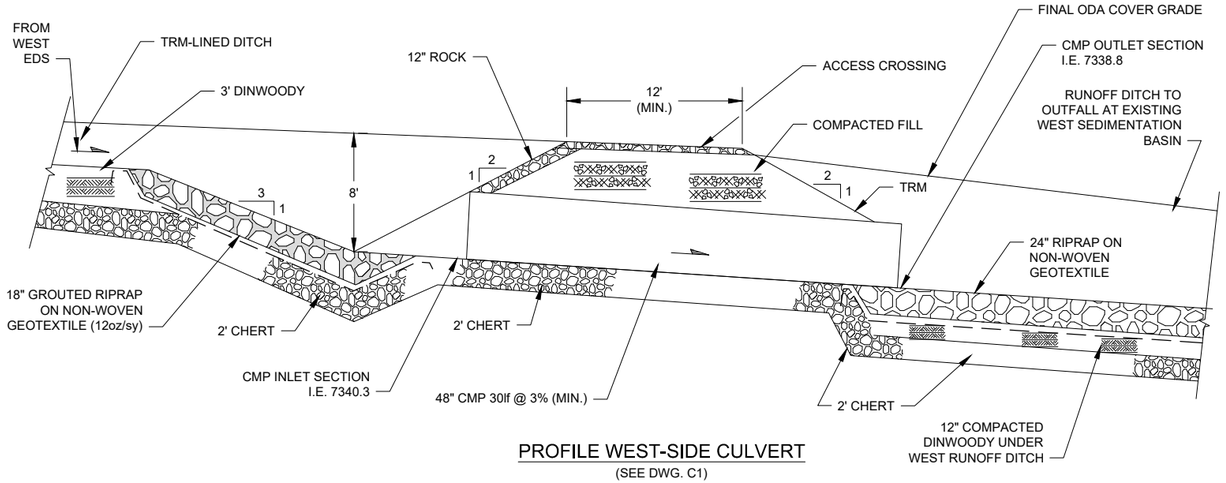

PROFILE WEST-SIDE CULVERT

(SEE DWG. C1)

SCALE 5 0 5 FEET

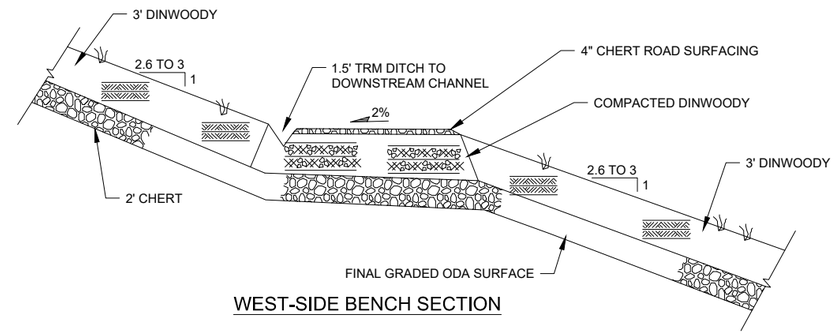

WEST-SIDE BENCH SECTION

SCALE 5 0 5 FEET

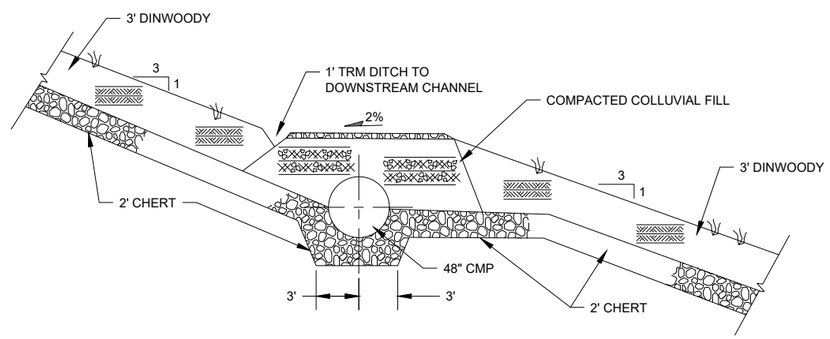

TYPICAL WEST-SIDE CULVERT SECTION

(SEE DWG. C1)

SCALE 5 0 5 FEET

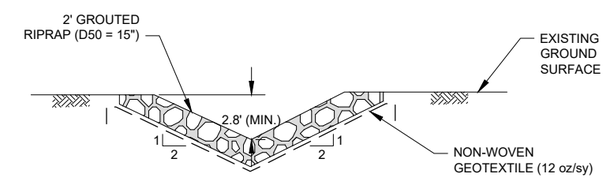

TYPICAL SECTION - CHUTE OUTFALL TO EXISTING WEST SEDIMENTATION/INFILTRATION BASIN

(SEE DWG. C1)

SCALE 5 0 5 FEET

REFERENCE	NO.	REVISIONS	BY	DATE
	AB2	REVISED AS-BUILT	BGH	06/17
	AB	AS-BUILT	BGH	01/17
	2	ISSUE FOR BID AND CONSTRUCTION	BGH	12/14
	1	ISSUE FOR FINAL REVIEW	BGH	08/14
	0	ISSUE FOR 90% REVIEW	BGH	06/14

KEY MAP

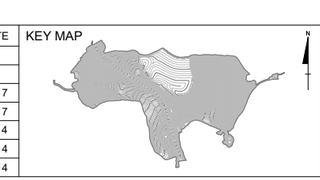

ORIGINAL SIGNED BY: BRIAN G. HANSEN

PROFESSIONAL ENGINEER REGISTERED 06/02/17 STATE OF IDAHO BRIAN G. HANSEN

NOT VALID UNLESS SIGNED

FORMATION ENVIRONMENTAL

DESIGNED BY:	JHR
DRAWN BY:	SCG
CHECKED BY:	BGH
APPROVED BY:	BGH
FILE NAME:	009-004-C15.1.DWG

J.R. SIMPLOT COMPANY - SMOKY CANYON MINE

POLE CANYON ODA-NTCRA

WEST-SIDE RUNOFF DITCH LOWER CULVERT - PLAN, PROFILE, AND DETAILS

DATE JUNE 2017 | DWG. NO. 009-004-C15.1 | REVISION AB2

E:\JYS Technical\Formation Environmental\Pole Canyon\Drawings\As-Built Drawings\SCG_CAD Files\C15point1 - Standard\C15point1.dwg 5/31/2017 11:44 PM

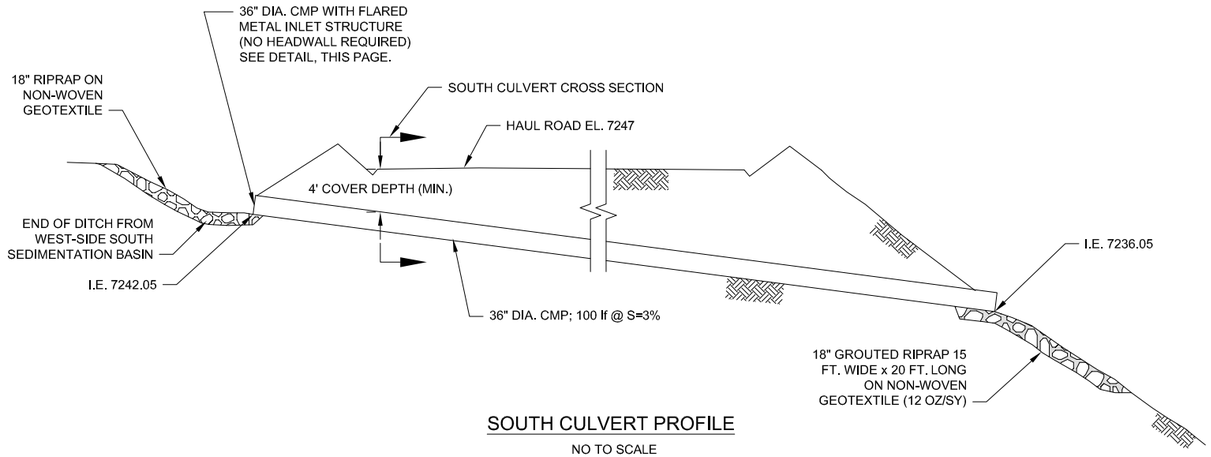

SOUTH CULVERT PROFILE

NO TO SCALE

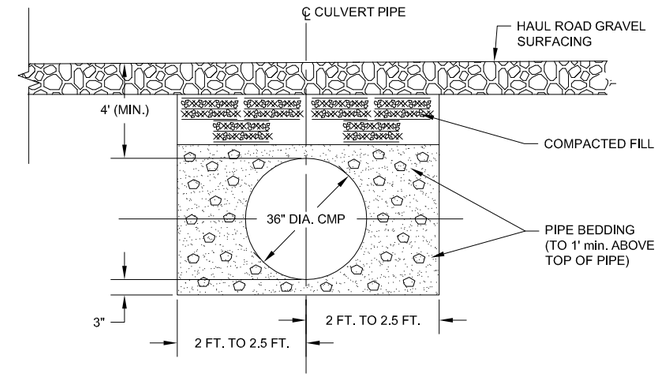

SOUTH CULVERT SECTION UNDER HAUL ROAD

NOT TO SCALE

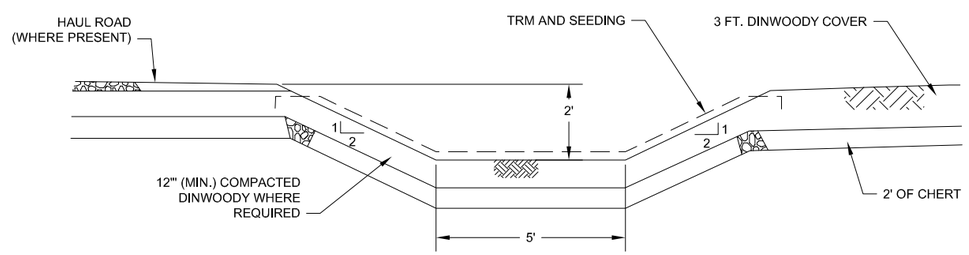

TYPICAL SECTION - WEST-SIDE RUNOFF DITCH TO SOUTH

(DITCH GRADIENTS <12%)

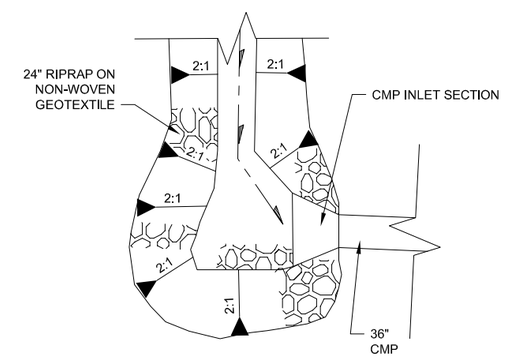

INLET TO 36-INCH CMP

NOT TO SCALE

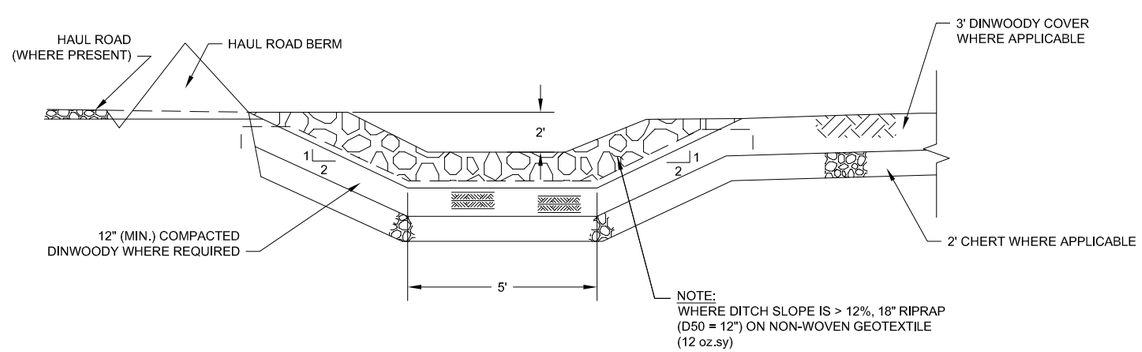

TYPICAL SECTION - NATIVE GROUND RUNOFF DITCH TO SOUTH

SCALE

2 0 2 FEET

REFERENCE	NO.	REVISIONS	BY	DATE
	AB	AS-BUILT	BGH	01/17
	3	ISSUE FOR BID AND CONSTRUCTION	BGH	12/14
	2	ISSUE FOR FINAL REVIEW	BGH	08/14
	1	ISSUE FOR 90% REVIEW	BGH	06/14
	0	ISSUE FOR REVIEW	BGH	02/14

KEY MAP

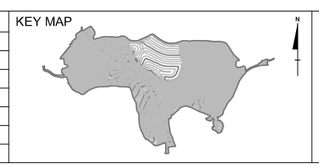

ORIGINAL SIGNED BY: BRIAN G. HANSEN

PROFESSIONAL ENGINEER REGISTERED 01/27/17 STATE OF IDAHO BRIAN G. HANSEN

NOT VALID UNLESS SIGNED

FORMATION ENVIRONMENTAL

DESIGNED BY:	JHR
DRAWN BY:	SCG
CHECKED BY:	BGH
APPROVED BY:	BGH
FILE NAME:	009-004-C15,2.DWG

J.R. SIMPLOT COMPANY - SMOKY CANYON MINE

POLE CANYON ODA-NTCRA

SOUTH RUNOFF DITCH AND CULVERT - PROFILE, SECTIONS, AND DETAILS

DATE JANUARY 2017 | DWG. NO. 009-004-C15.2 | REVISION AB

E:\JYS Technical\Formation Environmental\Pole Canyon\Drawings\As-Built Drawings\SCG_CAD Files\C15point2 - Standard\C15point2.dwg 1/16/2017 7:41 PM

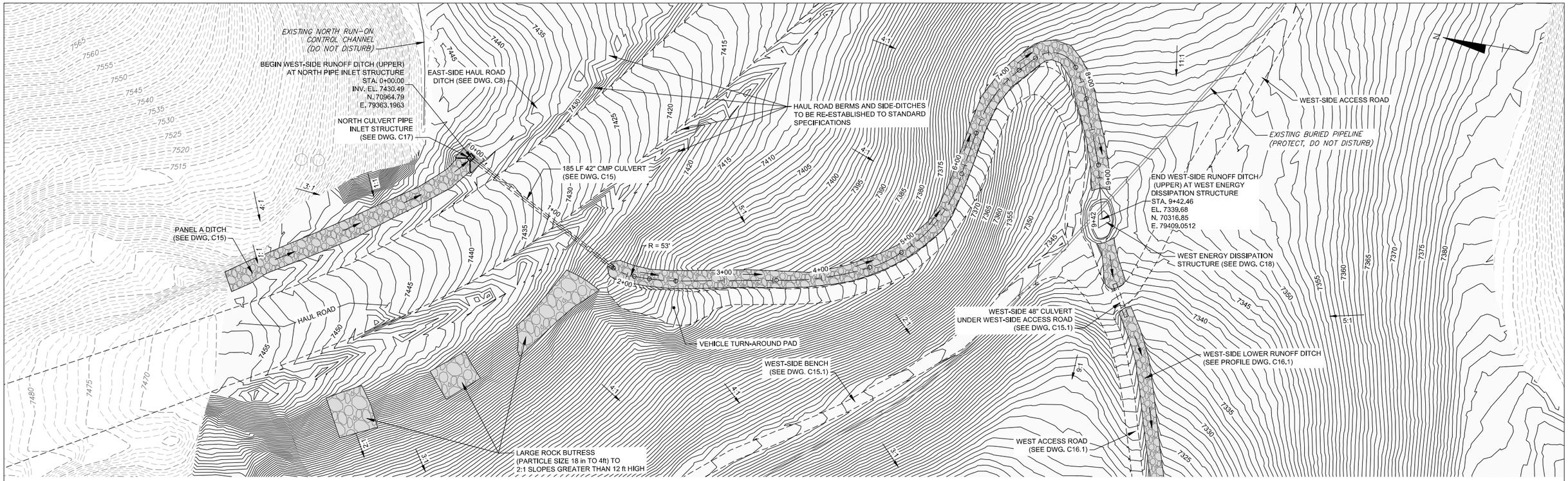

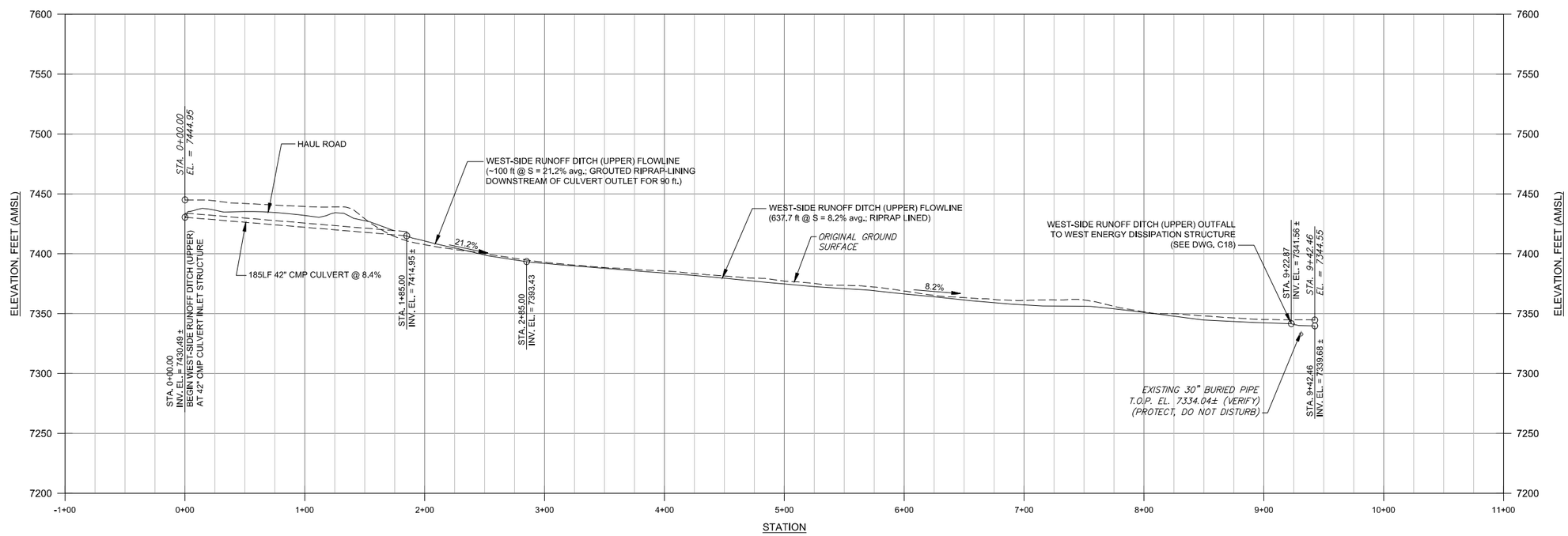

REFERENCE	NO.	REVISIONS	BY	DATE
	AB2	REVISED AS-BUILT	BGH	06/17
	AB	AS-BUILT	BGH	01/17
	3	INTERIM AS-BUILT	BGH	01/16
	2	ISSUE FOR BID AND CONSTRUCTION	BGH	12/14
	1	ISSUE FOR FINAL REVIEW	BGH	08/14
	0	ISSUE FOR 90% REVIEW	BGH	06/14

KEY MAP

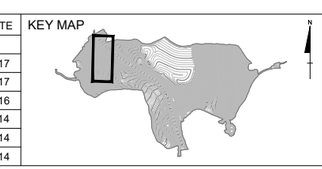

ORIGINAL SIGNED BY: BRIAN G. HANSEN
PROFESSIONAL ENGINEER REGISTERED 06/02/17 STATE OF IDAHO BRIAN G. HANSEN
NOT VALID UNLESS SIGNED

FORMATION ENVIRONMENTAL

DESIGNED BY:	JHR
DRAWN BY:	JAY
CHECKED BY:	BGH
APPROVED BY:	BGH
FILE NAME: C16-C16,1 - West-Side Runoff Ditches P&P.DWG	

J.R. SIMPLOT COMPANY - SMOKY CANYON MINE

POLE CANYON ODA-NTCRA

WEST-SIDE RUNOFF DITCH (UPPER) PLAN AND PROFILE

DATE JUNE 2017 | DWG. NO. 009-001-C16 | REVISION AB2

E:\YPS Technical\Formation Environmental\Pole Canyon\Drawings\As-Built Drawings\C16-C16.1 - West-Side Runoff Ditches P&P_AB.dwg 5/31/2017 11:13 PM

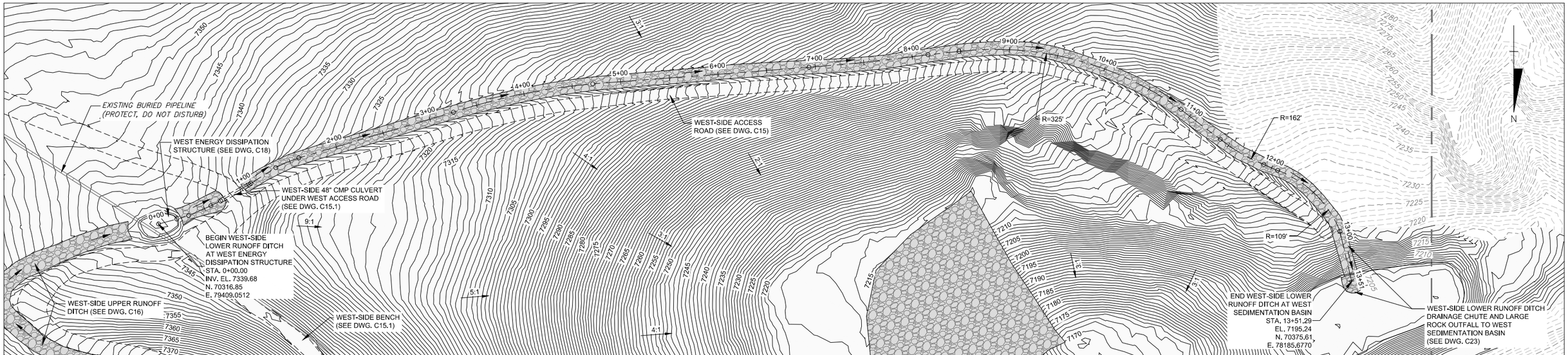

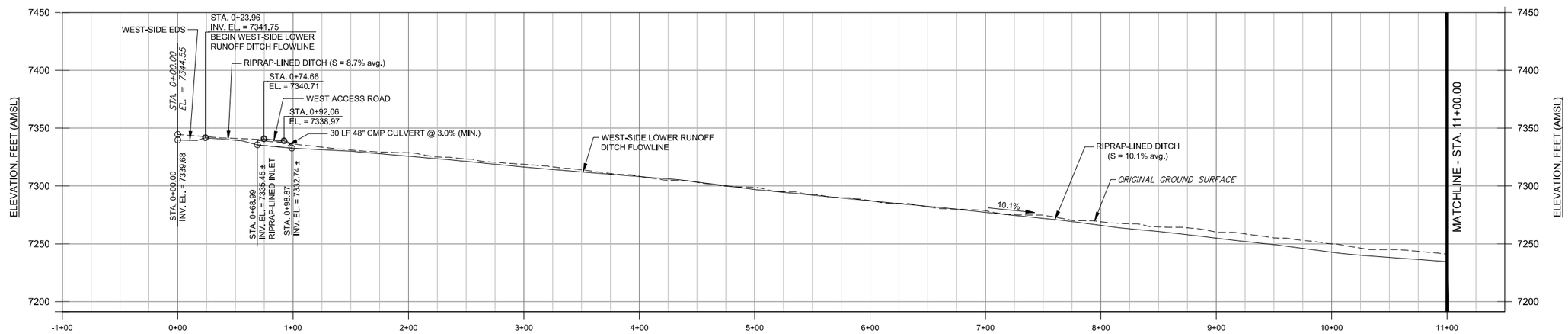

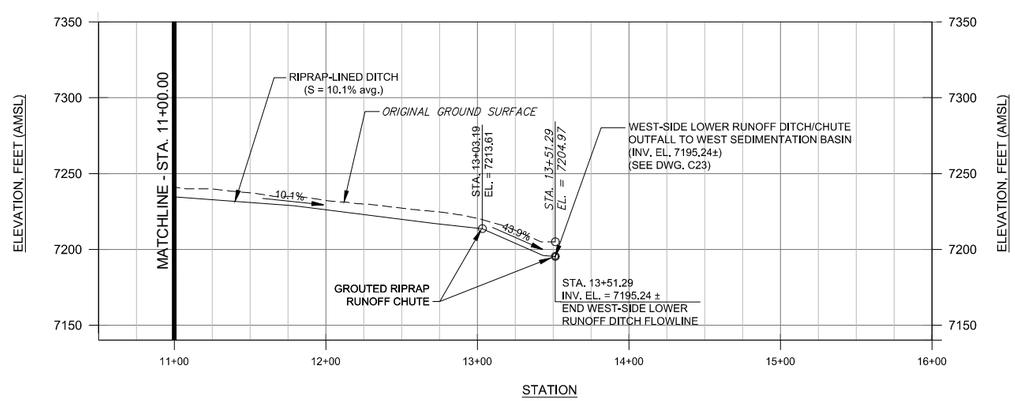

HORIZ. SCALE
50 0 50 FEET

VERT. SCALE
50 0 50 FEET

REFERENCE	NO.	REVISIONS	BY	DATE
	AB2	REVISED AS-BUILT	BGH	06/17
	AB	AS-BUILT	BGH	01/17
	3	INTERIM AS-BUILT	BGH	01/16
	2	ISSUE FOR BID AND CONSTRUCTION	BGH	12/14
	1	ISSUE FOR FINAL REVIEW	BGH	08/14
	0	ISSUE FOR 90% REVIEW	BGH	06/14

KEY MAP

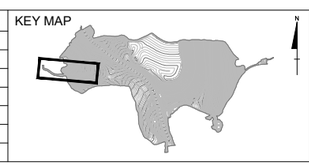

ORIGINAL SIGNED BY: BRIAN G. HANSEN
PROFESSIONAL ENGINEER REGISTERED 06/02/17 STATE OF IDAHO BRIAN G. HANSEN
NOT VALID UNLESS SIGNED

FORMATION ENVIRONMENTAL

DESIGNED BY:	JHR
DRAWN BY:	JAY
CHECKED BY:	BGH
APPROVED BY:	BGH
FILE NAME: C16-C16.1 - West-Side Runoff Ditches P&P.DWG	

J.R. SIMPLOT COMPANY - SMOKY CANYON MINE

POLE CANYON ODA-NTCRA

WEST-SIDE LOWER RUNOFF DITCH PLAN AND PROFILE

DATE JUNE 2017 | DWG. NO. 009-001-C16.1 | REVISION AB2

E:\JYS Technical\Formation Environmental\Pole Canyon\Drawings\As-Built Drawings\C16-C16.1 - West-Side Runoff Ditches P&P_AB.dwg 5/31/2017 11:19 PM

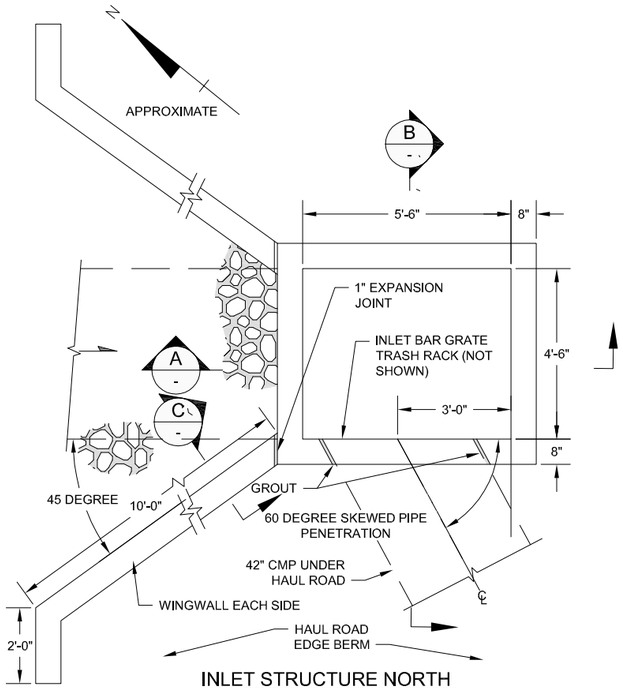

INLET STRUCTURE NORTH CULVERT UNDER HAUL ROAD

SCALE 2 0 2 FEET

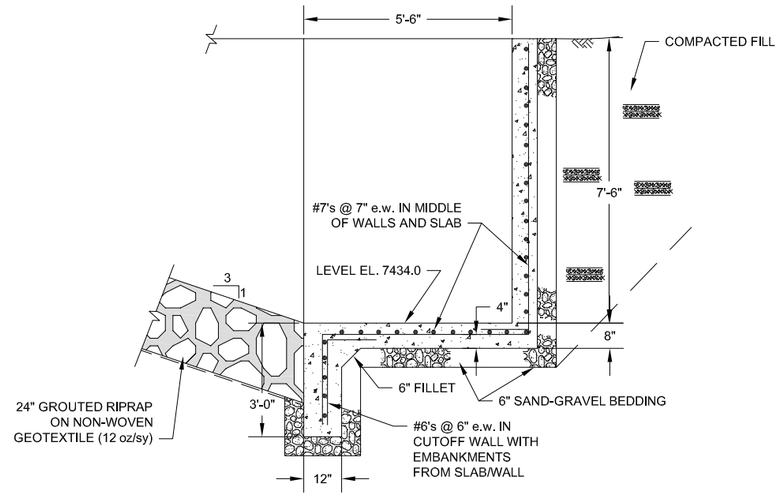

SECTION A

SCALE 2 0 2 FEET

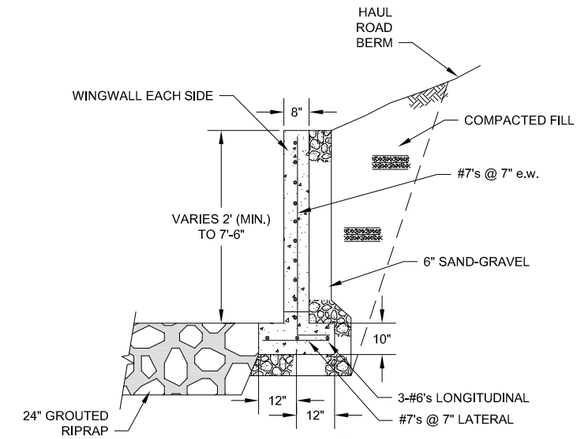

SECTION C

SCALE 2 0 2 FEET

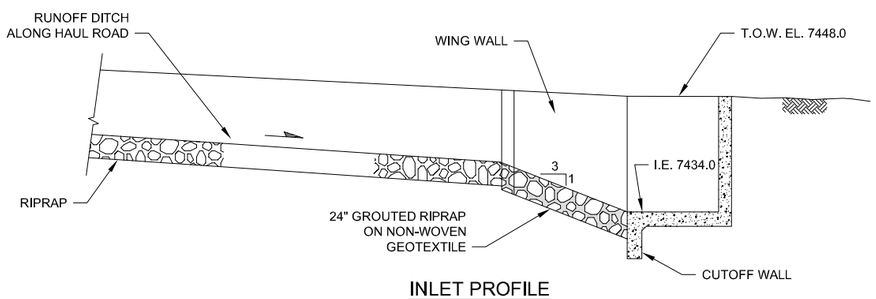

INLET PROFILE

SCALE 5 0 5 FEET

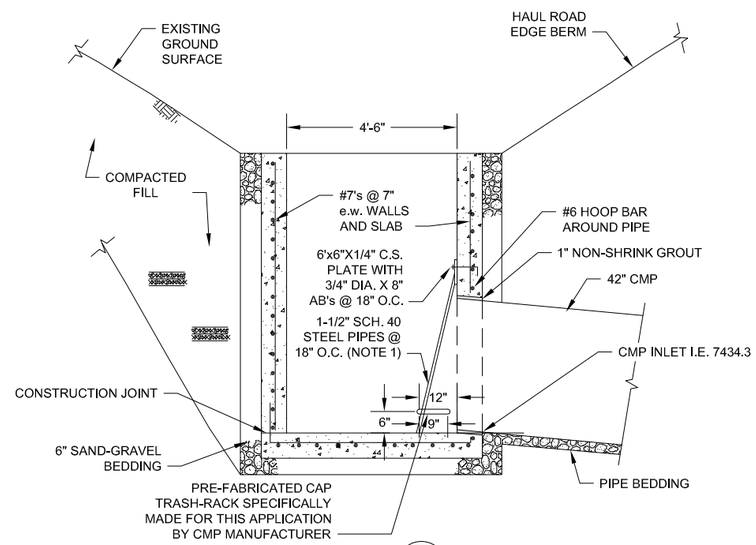

SECTION B

SCALE 2 0 2 FEET

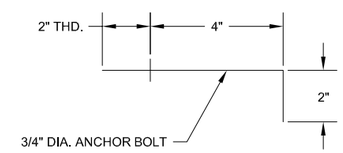

ANCHOR BOLT DETAIL

NOT TO SCALE

NOTES:

1. GRATE PIPES ARE BEVEL CUT AND WELDED TO TOP STEEL ANCHOR PLATE WITH FULL CIRCUMFERENCE WELDS.
2. CONCRETE HAS A MINIMUM 28-DAY COMPRESSIVE STRENGTH OF 4,000 PSI AND GRADE 60 DEFORMED STEEL REINFORCEMENT BARS WERE USED.
3. STEEL PIPE FOR TRASH RACK IS SCHEDULE 40 GALVANIZED STEEL.

REFERENCE	NO.	REVISIONS	BY	DATE
	AB	AS-BUILT	BGH	01/17
	2	ISSUE FOR BID AND CONSTRUCTION	BGH	12/14
	1	ISSUE FOR FINAL REVIEW	BGH	08/14
	0	ISSUE FOR 90% REVIEW	BGH	06/14

KEY MAP

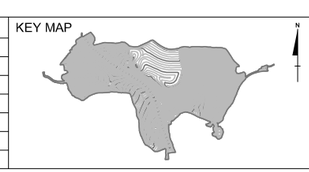

ORIGINAL SIGNED BY: BRIAN G. HANSEN

PROFESSIONAL ENGINEER REGISTERED STATE OF IDAHO BRIAN G. HANSEN 01/27/17

NOT VALID UNLESS SIGNED

FORMATION ENVIRONMENTAL

DESIGNED BY:	JHR
DRAWN BY:	SCG
CHECKED BY:	BGH
APPROVED BY:	BGH
FILE NAME:	009-004-C17 .DWG

J.R. SIMPLOT COMPANY - SMOKY CANYON MINE

POLE CANYON ODA-NTCRA

NORTH DRAINAGE INLET STRUCTURE TO CULVERT UNDER ROAD - PLAN AND SECTIONS

DATE JANUARY 2017 | DWG. NO. 009-004-C17 | REVISION AB

E:\JYS Technical\Formation Environmental\Pole Canyon\Drawings\As-Built Drawings\SCG_CAD Files\C17 – Standard\C17.dwg 1/16/2017 7:44 PM

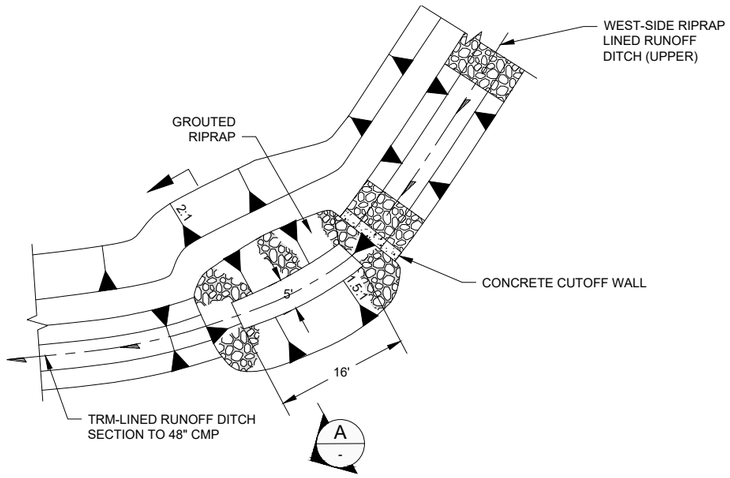

CONCEPTUAL PLAN - ENERGY DISSIPATION STRUCTURE
AT BASE OF RIPRAP LINED WEST-SIDE RUNOFF DITCH

(SEE DWG. C1)

NOT TO SCALE

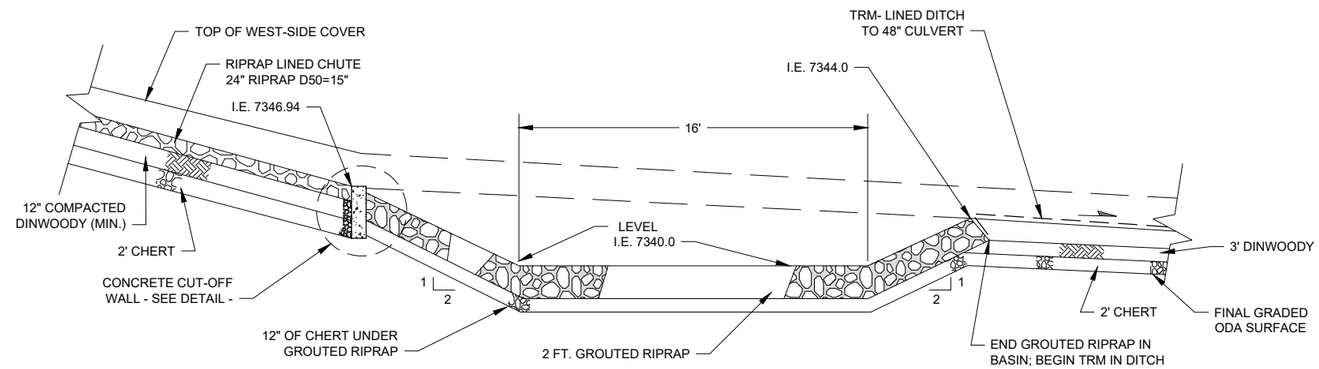

PROFILE - WEST-SIDE ENERGY DISSIPATION STRUCTURE

NOT TO SCALE

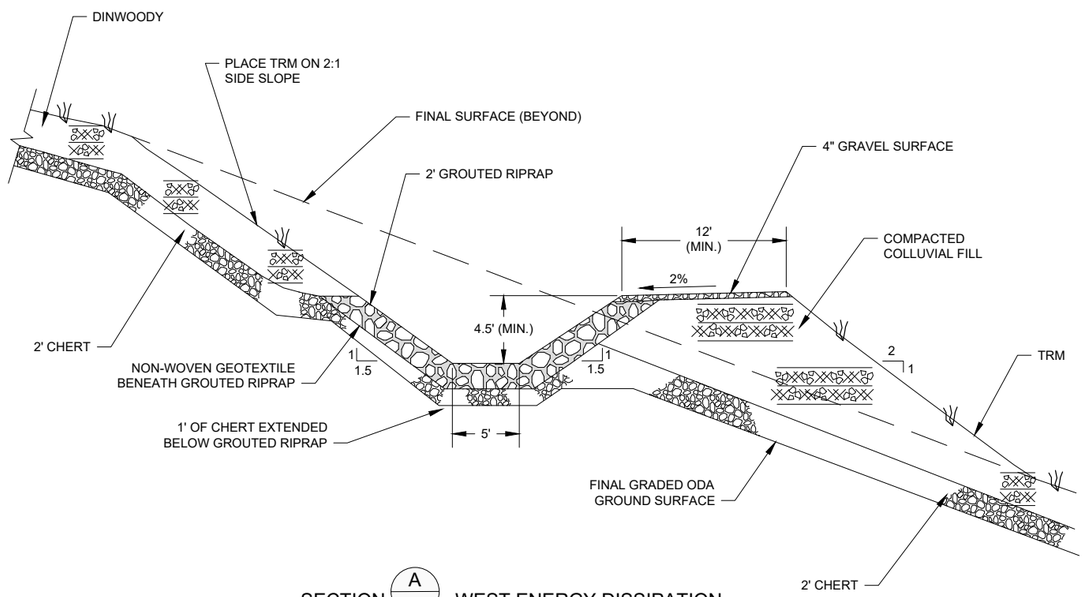

SECTION A/- - WEST ENERGY DISSIPATION
STRUCTURE BELOW WEST-SIDE RUNOFF DITCH (UPPER)

SCALE
5 0 5 FEET

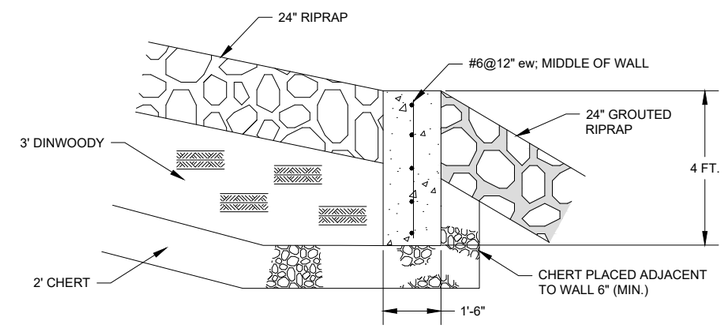

CUTOFF WALL DETAIL

NOT TO SCALE

REFERENCE	NO.	REVISIONS	BY	DATE
	AB2	REVISED AS-BUILT	BGH	06/17
	AB	AS-BUILT	BGH	01/17
	3	ISSUE FOR BID AND CONSTRUCTION	BGH	12/14
	2	ISSUE FOR FINAL REVIEW	BGH	08/14
	1	ISSUE FOR 90% REVIEW	BGH	06/14
	0	ISSUE FOR REVIEW	BGH	02/14

KEY MAP

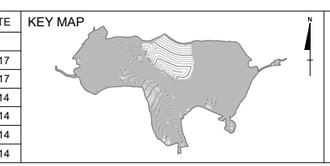

ORIGINAL SIGNED BY: BRIAN G. HANSEN

PROFESSIONAL ENGINEER REGISTERED STATE OF IDAHO BRIAN G. HANSEN 06/02/17

NOT VALID UNLESS SIGNED

FORMATION ENVIRONMENTAL

DESIGNED BY:	JHR
DRAWN BY:	SCG
CHECKED BY:	BGH
APPROVED BY:	BGH
FILE NAME:	009-004-C18.DWG

J.R. SIMPLOT COMPANY - SMOKY CANYON MINE

POLE CANYON ODA-NTCRA

WEST ENERGY DISSIPATION
STRUCTURE - PLAN AND SECTIONS

DATE JUNE 2017 | DWG. NO. 009-004-C18 | REVISION AB2

E:\JYS Technical\Formation Environmental\Pole Canyon\Drawings\As-Built Drawings\SCG_CAD Files\C18 - Standard\C18.dwg 5/31/2017 11:42 PM

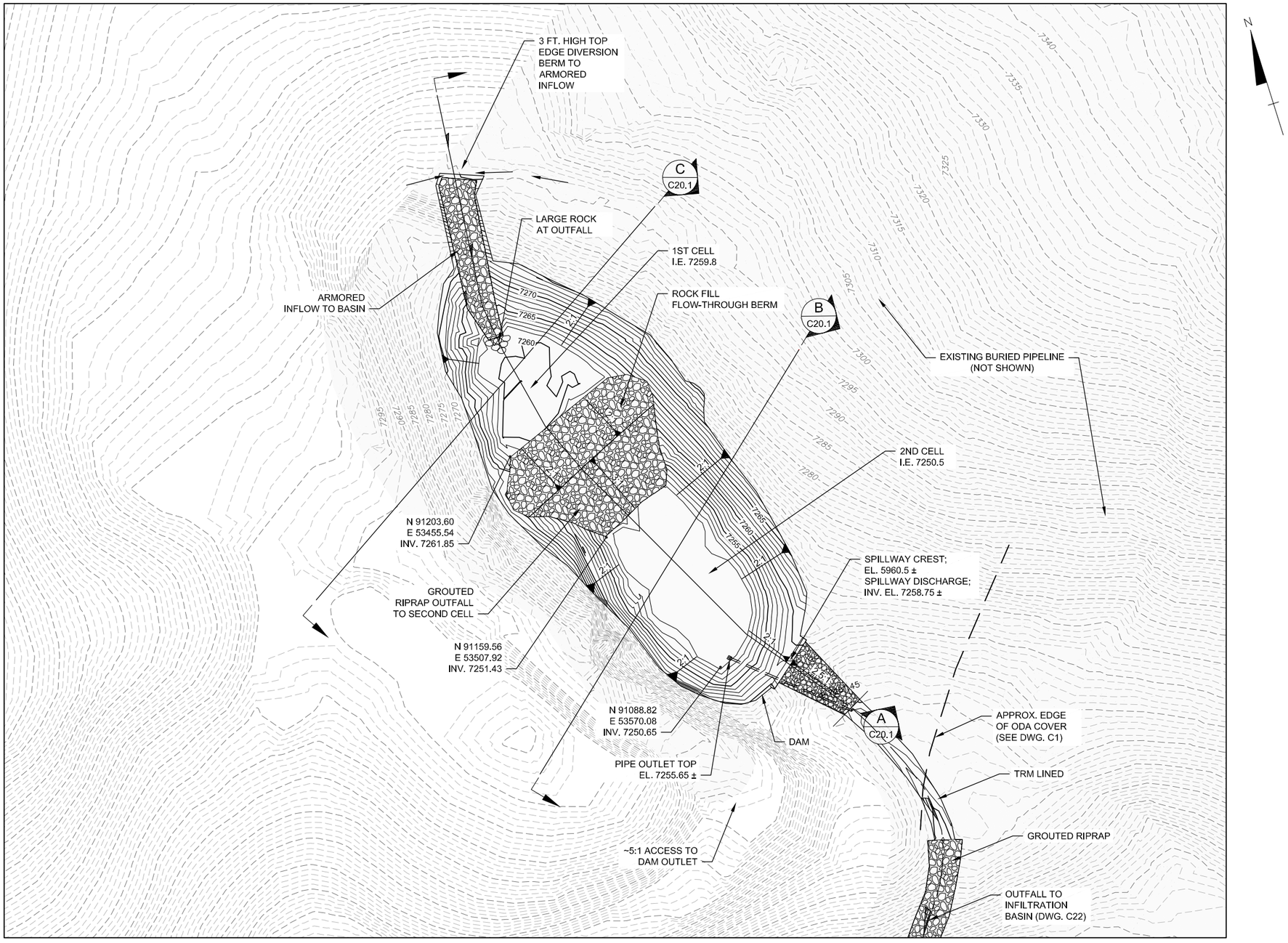

NORTHWEST BASIN PLAN

APPROX. SCALE

30 0 30 FEET

REFERENCE	NO.	REVISIONS	BY	DATE
	AB	AS-BUILT	BGH	01/17
	2	ISSUE FOR BID AND CONSTRUCTION	BGH	12/14
	1	ISSUE FOR FINAL REVIEW	BGH	08/14
	0	ISSUE FOR 90% REVIEW	BGH	06/14

KEY MAP

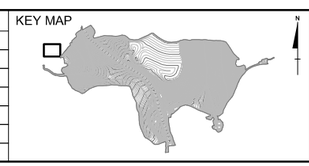

ORIGINAL SIGNED BY: BRIAN G. HANSEN

PROFESSIONAL ENGINEER REGISTERED 01/27/17 STATE OF IDAHO BRIAN G. HANSEN

NOT VALID UNLESS SIGNED

FORMATION ENVIRONMENTAL

DESIGNED BY:	JHR
DRAWN BY:	SCG
CHECKED BY:	BGH
APPROVED BY:	BGH
FILE NAME:	009-004-C20.DWG

J.R. SIMPLOT COMPANY - SMOKY CANYON MINE

POLE CANYON ODA-NTCRA

NORTHWEST BASIN - PLAN

DATE JANUARY 2017 | DWG. NO. 009-004-C20 | REVISION AB

E:\JYS Technical\Formation Environmental\Pole Canyon\Drawings\As-Built Drawings\SCG_CAD Files\C20-C20point1 - Standard\C20-C20point1.dwg 1/16/2017 6:54 PM

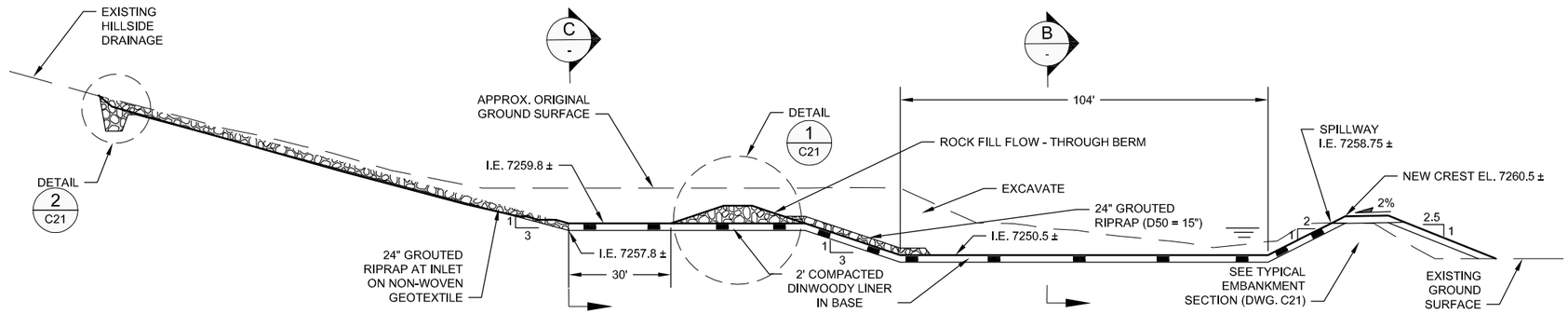

PROFILE A C20

SCALE 20 0 20 FEET

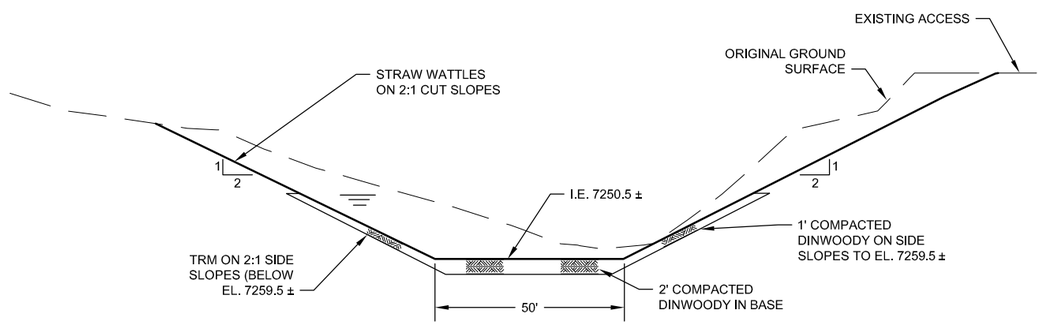

SECTION B C20

SCALE 20 0 20 FEET

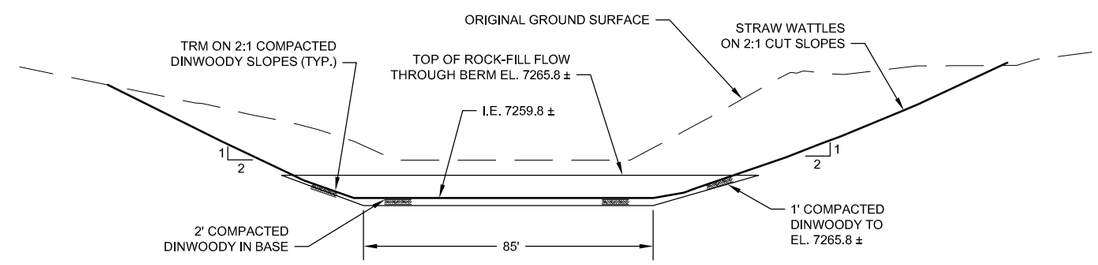

SECTION C C20

SCALE 20 0 20 FEET

REFERENCE	NO.	REVISIONS	BY	DATE
	AB	AS-BUILT	BGH	01/17
	1	ISSUE FOR BID AND CONSTRUCTION	BGH	12/14
	0	ISSUE FOR FINAL REVIEW	BGH	08/14

KEY MAP

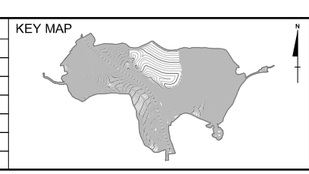

ORIGINAL SIGNED BY: BRIAN G. HANSEN

PROFESSIONAL ENGINEER REGISTERED 01/27/17 STATE OF IDAHO BRIAN G. HANSEN

NOT VALID UNLESS SIGNED

FORMATION ENVIRONMENTAL

DESIGNED BY:	JHR
DRAWN BY:	SCG
CHECKED BY:	BGH
APPROVED BY:	BGH
FILE NAME:	009-004-C20.DWG

J.R. SIMPLOT COMPANY - SMOKY CANYON MINE

POLE CANYON ODA-NTCRA

NORTHWEST BASIN - SECTIONS

DATE JANUARY 2017 | DWG. NO. 009-004-C20.1 | REVISION AB

E:\JYS Technical\Formation Environmental\Pole Canyon\Drawings\As-Built Drawings\SCG_CAD Files\C20-C20point1 - Standard\C20-C20point1.dwg 1/16/2017 6:54 PM

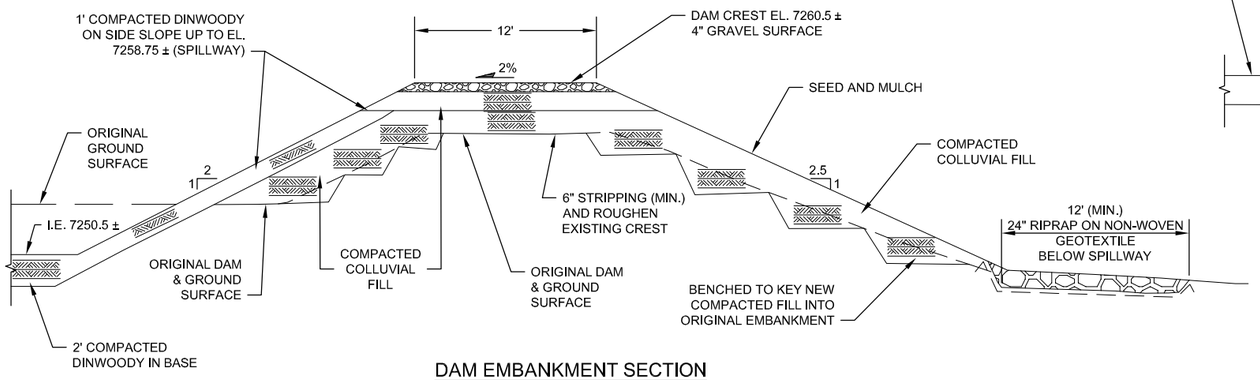

DAM EMBANKMENT SECTION

SCALE
5 0 5 FEET

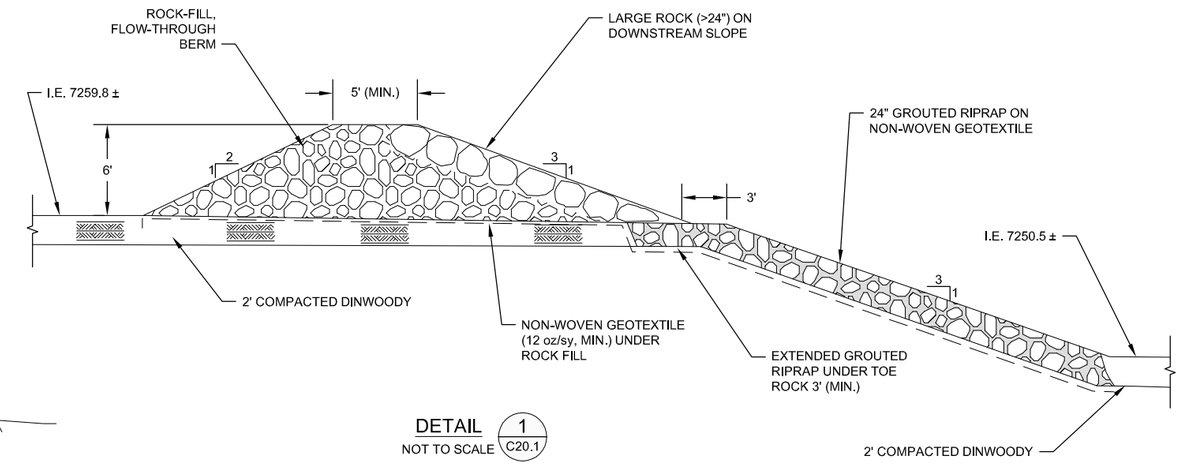

DETAIL 1 / C20.1

NOT TO SCALE

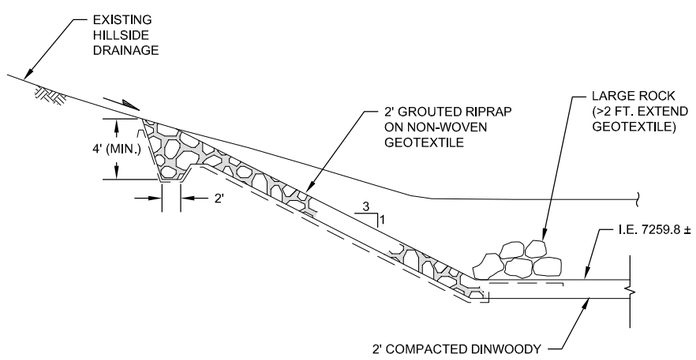

DETAIL 2 / C20.1

NOT TO SCALE

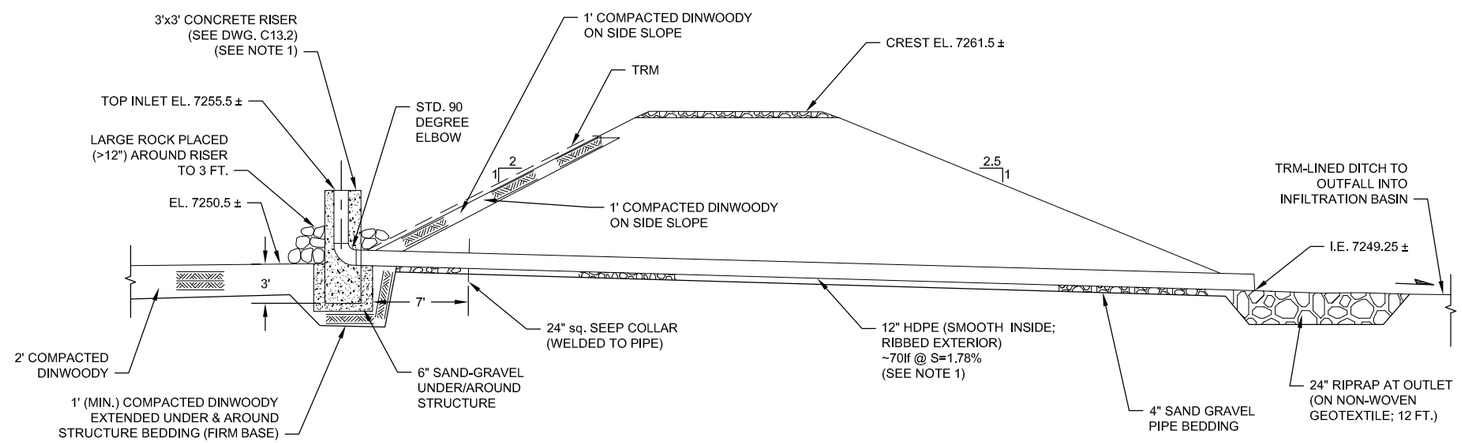

OUTLET PIPE PROFILE

SCALE
5 0 5 FEET

NOTE:
1. HDPE PIPE USED FOR OUTLET

REFERENCE	NO.	REVISIONS	BY	DATE
	AB	AS-BUILT	BGH	01/17
	2	ISSUE FOR BID AND CONSTRUCTION	BGH	12/14
	1	ISSUE FOR FINAL REVIEW	BGH	08/14
	0	ISSUE FOR 90% REVIEW	BGH	06/14

KEY MAP

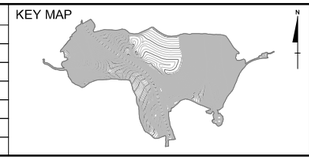

ORIGINAL SIGNED BY: BRIAN G. HANSEN
PROFESSIONAL ENGINEER REGISTERED STATE OF IDAHO BRIAN G. HANSEN 01/27/17
NOT VALID UNLESS SIGNED

FORMATION ENVIRONMENTAL

DESIGNED BY:	JHR
DRAWN BY:	SCG
CHECKED BY:	BGH
APPROVED BY:	BGH
FILE NAME:	009-004-C21.DWG

J.R. SIMPLOT COMPANY - SMOKY CANYON MINE

POLE CANYON ODA-NTCRA

NORTHWEST BASIN OUTLET AND SPILLWAY - SECTIONS AND DETAILS

DATE JANUARY 2017 | DWG. NO. 009-004-C21 | REVISION AB

E:\JYS Technical\Formation Environmental\Pole Canyon\Drawings\As-Built Drawings\SCG_CAD Files\C21 - Standard\C21.dwg 1/16/2017 7:03 PM

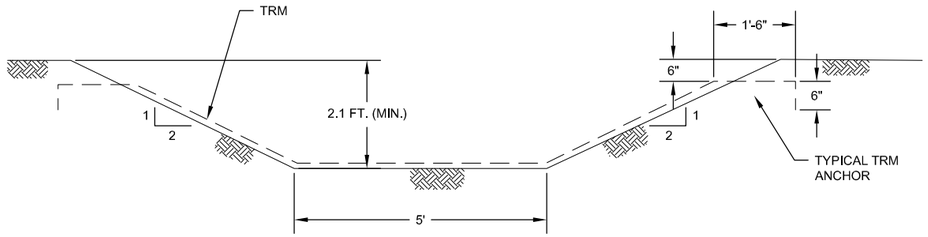

TYPICAL SECTION
UPPER REACH DISCHARGE DITCH FROM NORTHWEST BASIN

SCALE
1.5 0 1.5 FEET

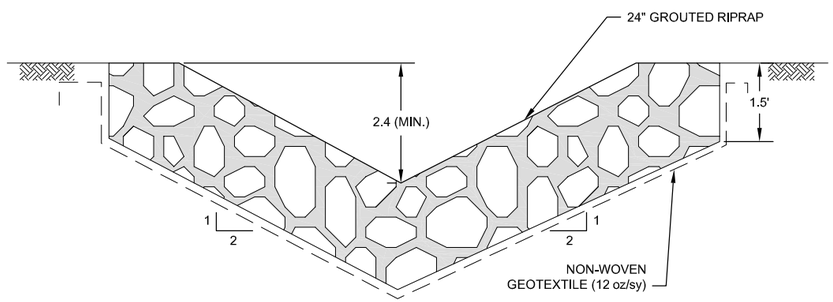

TYPICAL SECTION
DISCHARGE CHUTE TO EXISTING INFILTRATION BASIN

SCALE
1.5 0 1.5 FEET

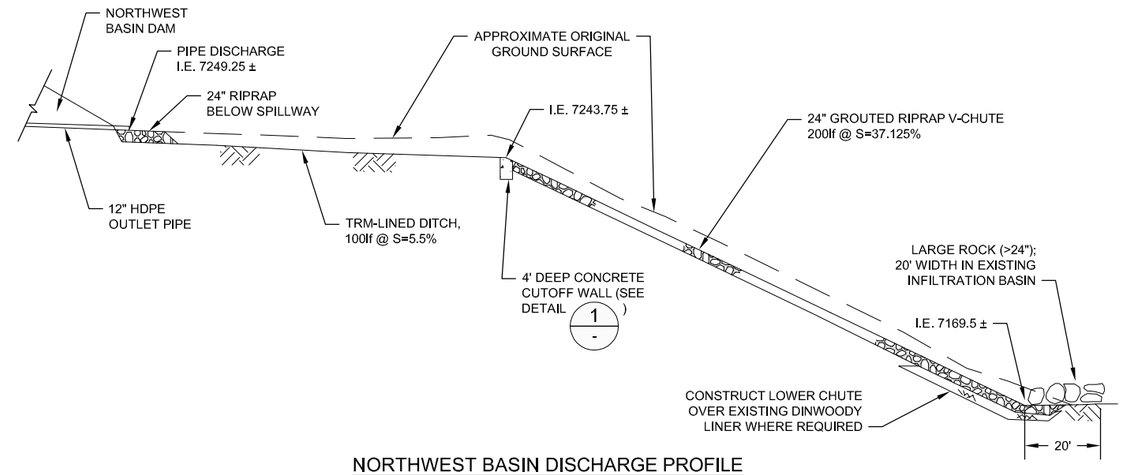

NORTHWEST BASIN DISCHARGE PROFILE

SCALE
20 0 20 FEET

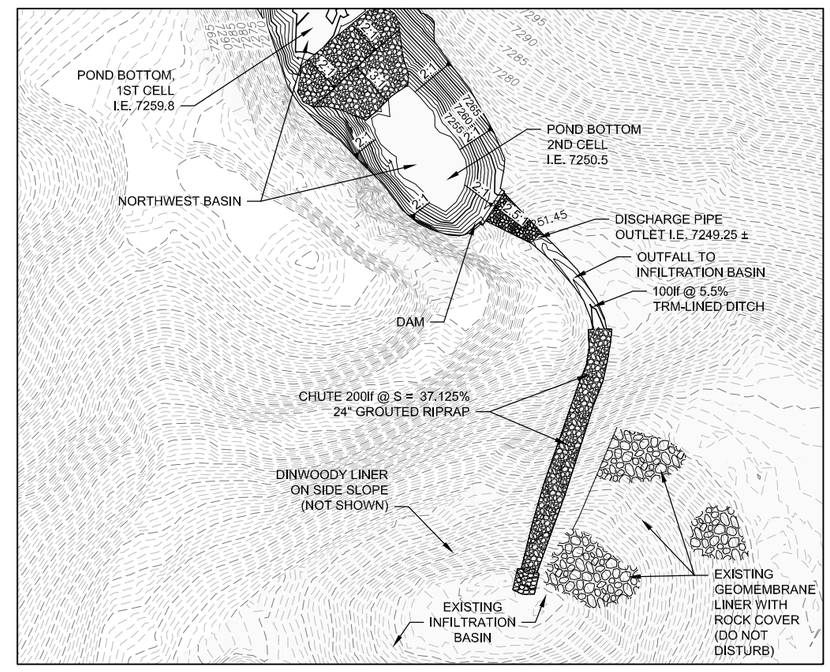

PLAN
DISCHARGE FROM NORTHWEST BASIN

APPROX. SCALE
60 0 60 FEET

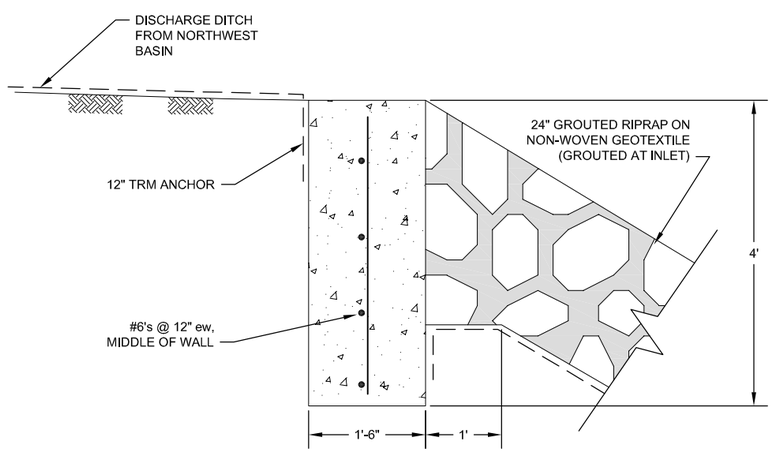

DETAIL 1/-

SCALE
1 0 1 FEET

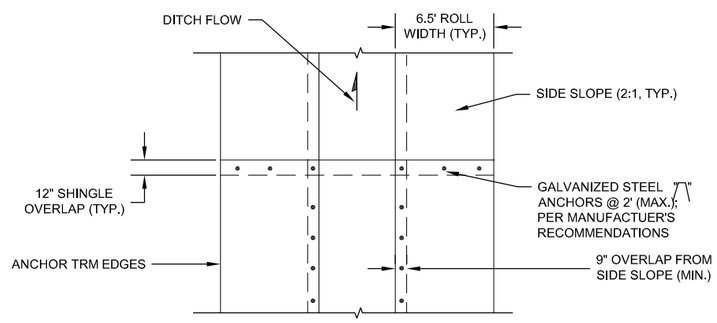

TYPICAL TRM LAYOUT IN DITCH

SCALE
5 0 5 FEET

REFERENCE	NO.	REVISIONS	BY	DATE
	AB	AS-BUILT	BGH	01/17
	2	ISSUE FOR BID AND CONSTRUCTION	BGH	12/14
	1	ISSUE FOR FINAL REVIEW	BGH	08/14
	0	ISSUE FOR 90% REVIEW	BGH	06/14

KEY MAP

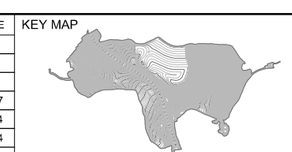

ORIGINAL SIGNED BY: BRIAN G. HANSEN

PROFESSIONAL ENGINEER REGISTERED STATE OF IDAHO BRIAN G. HANSEN 01/27/17

NOT VALID UNLESS SIGNED

FORMATION ENVIRONMENTAL

DESIGNED BY:	JHR
DRAWN BY:	SCG
CHECKED BY:	BGH
APPROVED BY:	BGH
FILE NAME:	009-004-C22.DWG

J.R. SIMPLOT COMPANY - SMOKY CANYON MINE

POLE CANYON ODA-NTCRA

OUTFALL INTO EXISTING WEST INFILTRATION BASIN - PLAN, SECTIONS, AND DETAILS

DATE JANUARY 2017 | DWG. NO. 009-004-C22 | REVISION AB

E:\JYS Technical\Formation Environmental\Pole Canyon\Drawings\As-Built Drawings\SCG_CAD Files\C22 - Standard\C22.dwg 1/16/2017 7:12 PM

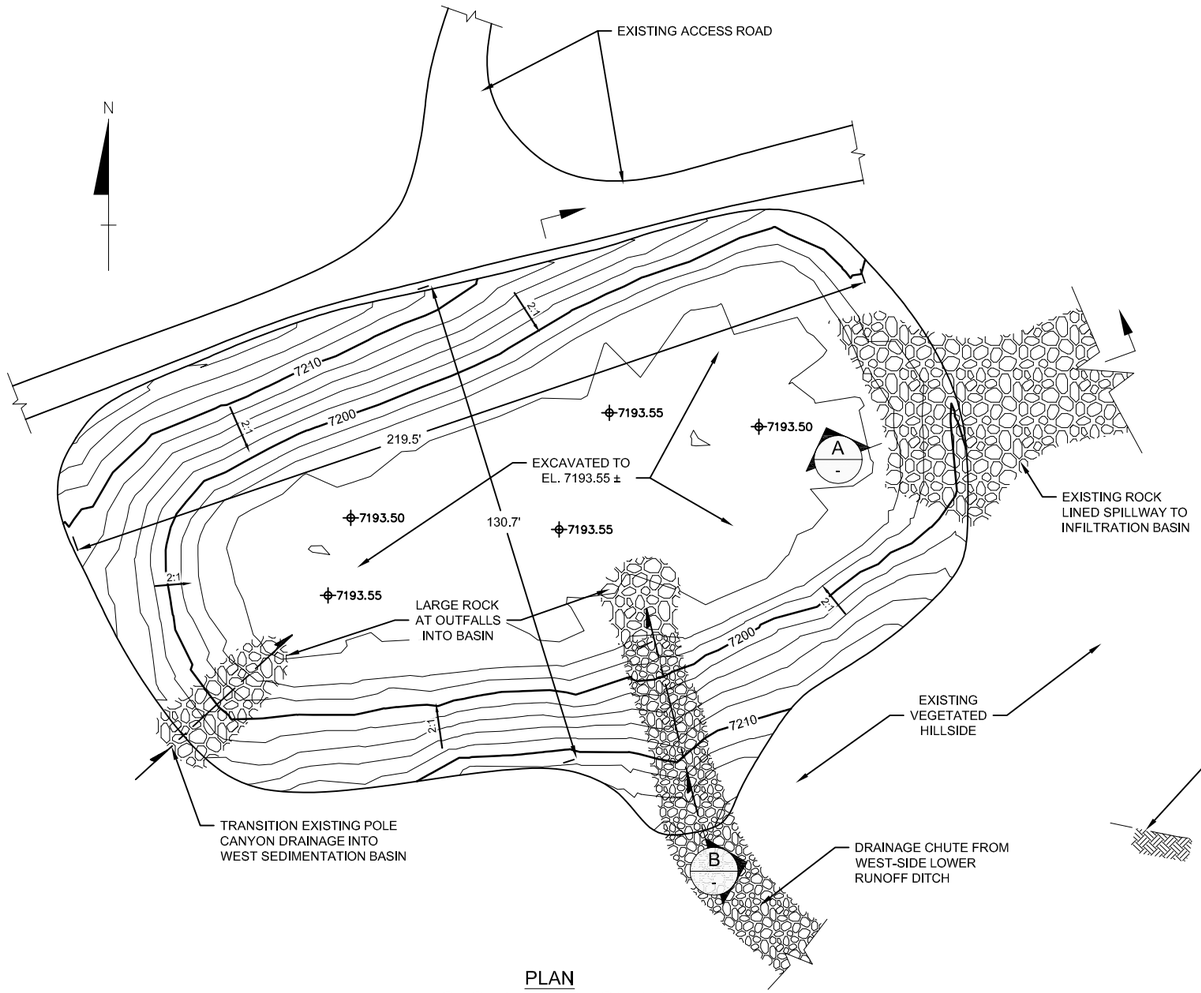

PLAN
WEST SEDIMENTATION BASIN

APPROX. SCALE
20 0 20 FEET

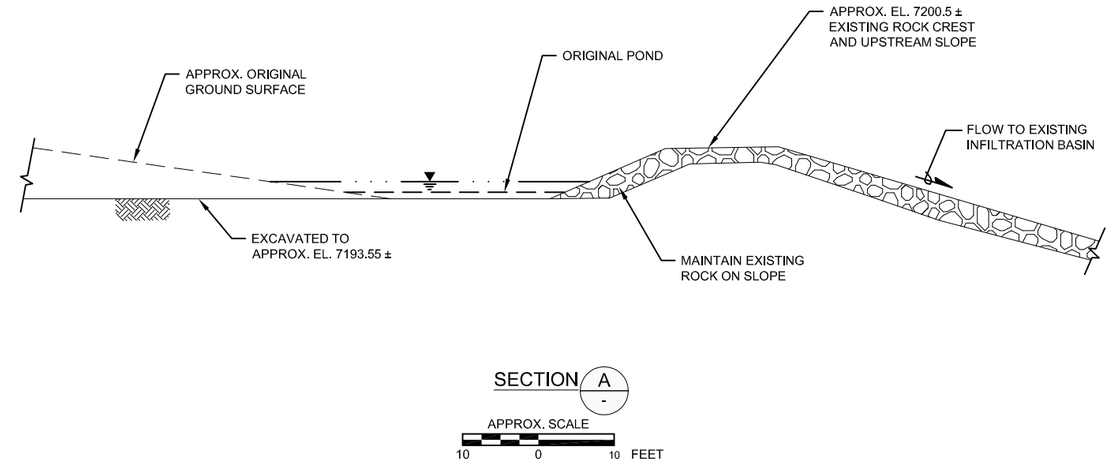

SECTION A

APPROX. SCALE
10 0 10 FEET

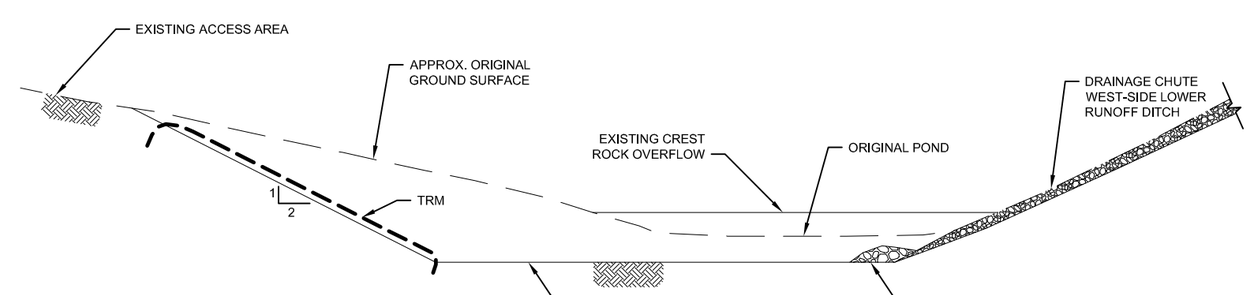

SECTION B

APPROX. SCALE
10 0 10 FEET

NOTES:

1. CREEK FLOW WAS DIVERTED TO THE EXTENT PRACTICABLE, BUT DUE TO ELEVATION DIFFERENCES SEVERAL FEET OF WATER REMAINED AND THEREFORE THE FLOOR ELEVATION WAS RAISED TO ACCOMMODATE REQUIRED CAPACITY.
2. WATER, SEDIMENT, DEAD TREES, AND VEGETATION WERE REMOVED TO THE EXTENT PRACTICABLE.

REFERENCE	NO.	REVISIONS	BY	DATE
	AB	AS-BUILT	BGH	01/17
	2	ISSUE FOR BID AND CONSTRUCTION	BGH	12/14
	1	ISSUE FOR FINAL REVIEW	BGH	08/14
	0	ISSUE FOR 90% REVIEW	BGH	06/14

KEY MAP

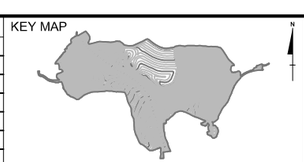

ORIGINAL SIGNED BY: BRIAN G. HANSEN
PROFESSIONAL ENGINEER REGISTERED STATE OF IDAHO BRIAN G. HANSEN 01/27/17
NOT VALID UNLESS SIGNED

FORMATION ENVIRONMENTAL

DESIGNED BY:	JHR
DRAWN BY:	SCG
CHECKED BY:	BGH
APPROVED BY:	BGH
FILE NAME:	009-004-C23.DWG

J.R. SIMPLOT COMPANY - SMOKY CANYON MINE

POLE CANYON ODA-NTCRA

OUTFALL AND PLAN
WEST SEDIMENTATION BASIN -
PROFILE AND SECTIONS

DATE JANUARY 2017 | DWG. NO. 009-004-C23 | REVISION AB

E:\JYS Technical\Formation Environmental\Pole Canyon\Drawings\As-Built Drawings\SCG_CAD Files\C23 - Standard\C23.dwg 1/25/2017 1:58 AM

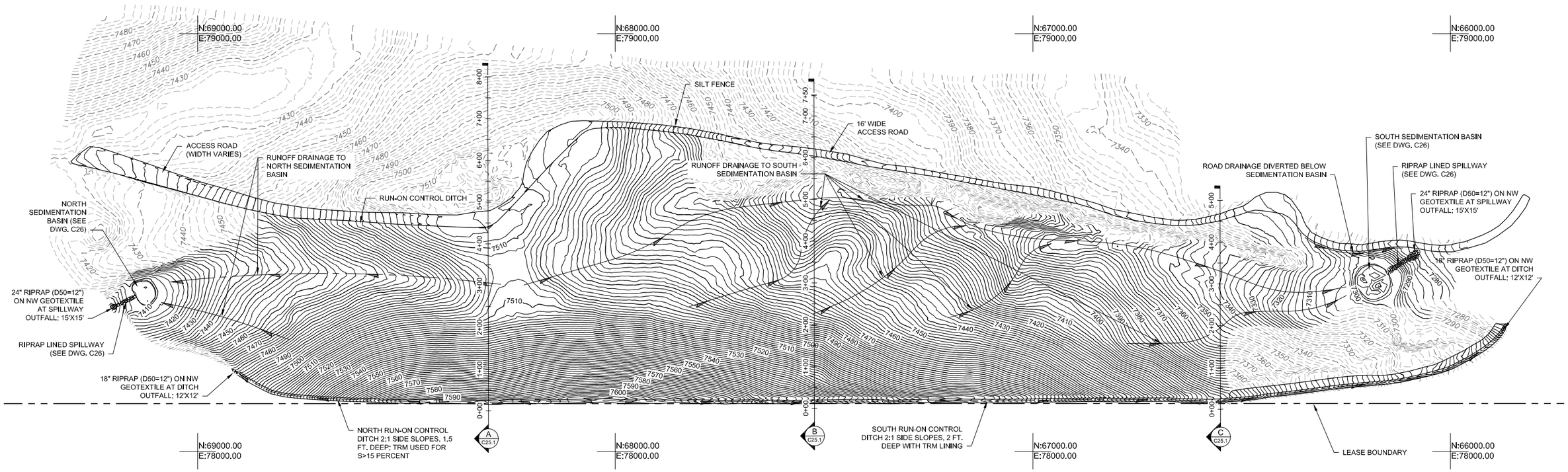

REFERENCE	NO.	REVISIONS	BY	DATE
	AB	AS-BUILT	BGH	01/17
	2	ISSUE FOR BID AND CONSTRUCTION	BGH	12/14
	1	ISSUE FOR FINAL REVIEW	BGH	08/14
	0	ISSUE FOR 90% REVIEW	BGH	06/14

KEY MAP

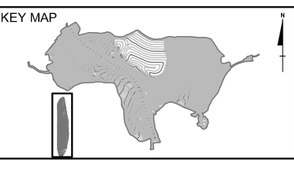

ORIGINAL SIGNED BY: BRIAN G. HANSEN

PROFESSIONAL ENGINEER REGISTERED 01/27/17 STATE OF IDAHO BRIAN G. HANSEN

NOT VALID UNLESS SIGNED

FORMATION ENVIRONMENTAL

DESIGNED BY:	JHR
DRAWN BY:	SCG
CHECKED BY:	BGH
APPROVED BY:	BGH
FILE NAME:	009-001-C25.DWG

J.R. SIMPLOT COMPANY - SMOKY CANYON MINE

POLE CANYON ODA-NTCRA

DINWOODY BORROW AREA - REGRADING PLAN

DATE JANUARY 2017 | DWG. NO. 009-001-C25 | REVISION AB

E:\JYS Technical\Formation Environmental\Pole Canyon\Drawings\As-Built Drawings\SCG_CAD Files\C25-C25point1 - Standard\C25-C25point1.dwg 1/26/2017 4:08 PM

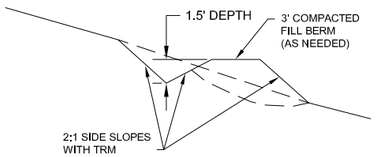

NORTH RUN-ON DITCH DETAIL

NOT TO SCALE

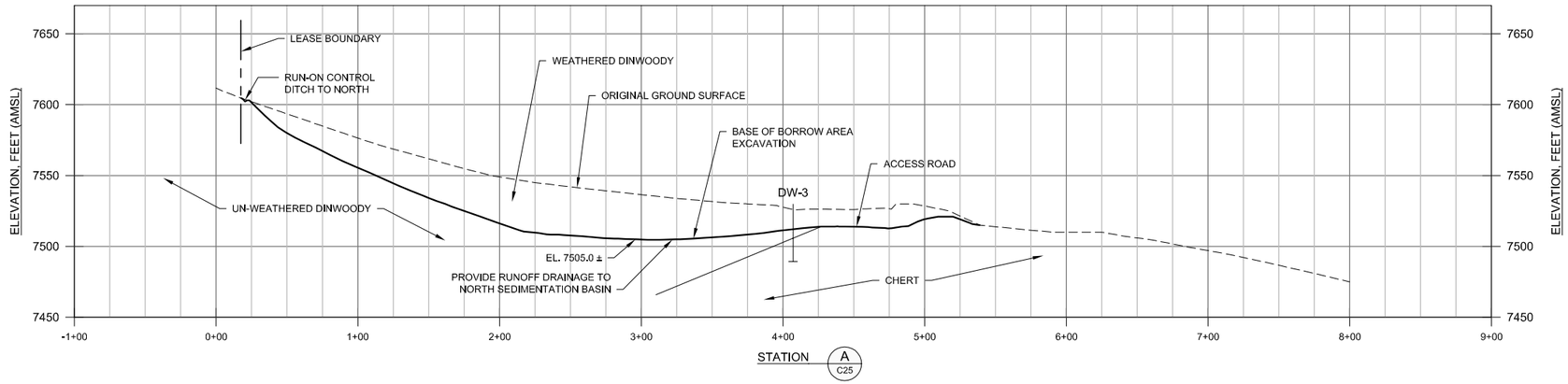

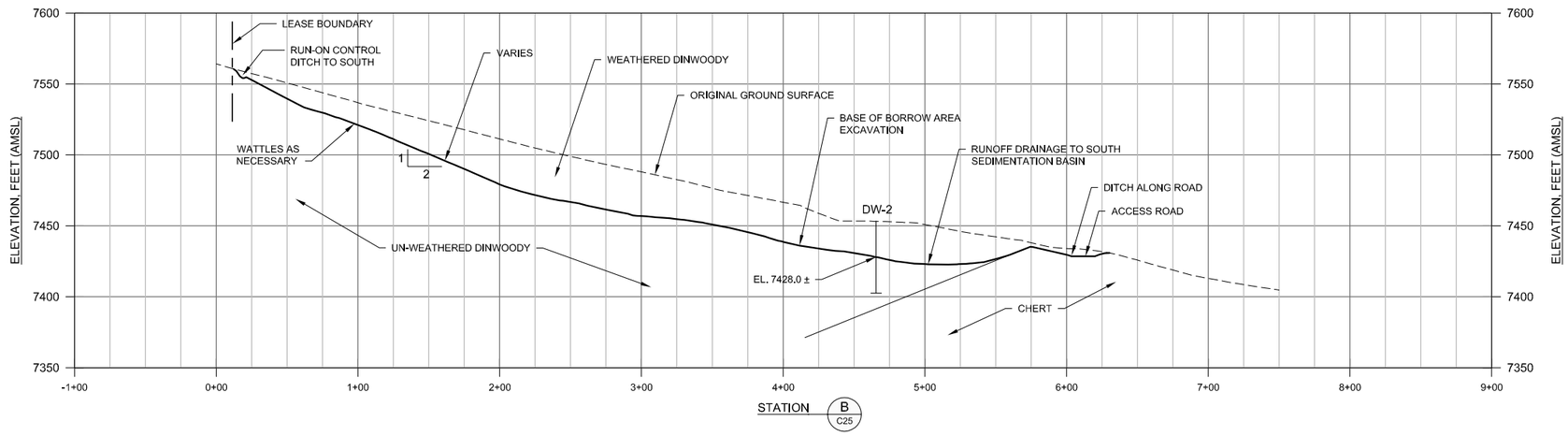

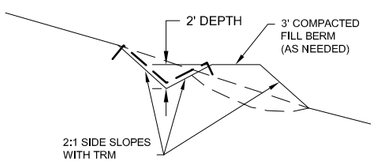

SOUTH RUN-ON DITCH DETAIL

NOT TO SCALE

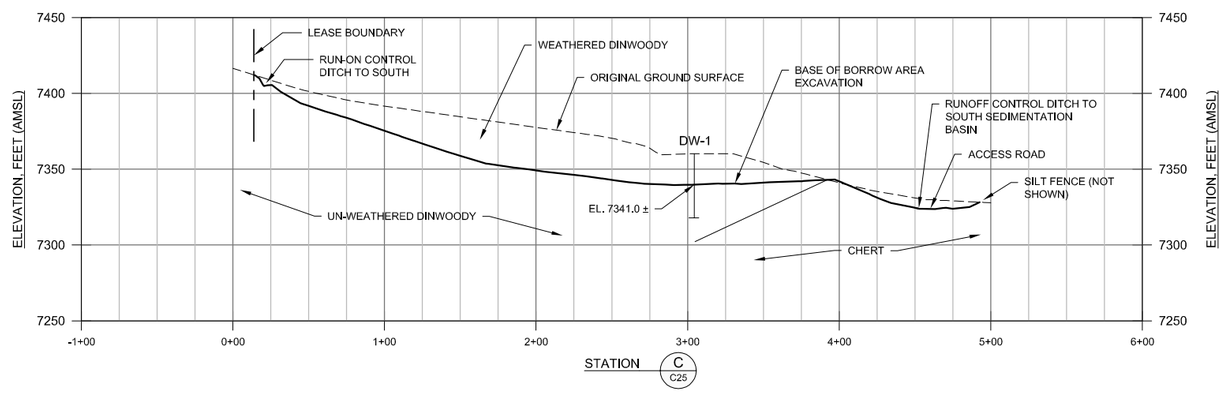

SCALE

50 0 50 FEET

NOTES:

1. GENERALIZED SUBSURFACE INFORMATION BASED ON SIMPLOT GEOTECHNICAL INVESTIGATION REPORT, FEB. 2014.

REFERENCE	NO.	REVISIONS	BY	DATE
	AB	AS-BUILT	BGH	01/17
	2	ISSUE FOR BID AND CONSTRUCTION	BGH	12/14
	1	ISSUE FOR FINAL REVIEW	BGH	08/14
	0	ISSUE FOR 90% REVIEW	BGH	06/14

KEY MAP

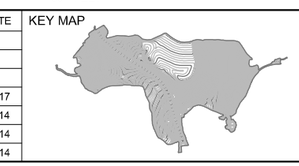

ORIGINAL SIGNED BY: BRIAN G. HANSEN

PROFESSIONAL ENGINEER REGISTERED 01/27/17 STATE OF IDAHO BRIAN G. HANSEN

NOT VALID UNLESS SIGNED

FORMATION ENVIRONMENTAL

DESIGNED BY:	JHR
DRAWN BY:	SCG
CHECKED BY:	BGH
APPROVED BY:	BGH
FILE NAME:	009-001-C25.1.DWG

J.R. SIMPLOT COMPANY - SMOKY CANYON MINE

POLE CANYON ODA-NTCRA

DINWOODY BORROW AREA - REGRADING SECTIONS AND RUN-ON DITCH DETAILS

DATE JANUARY 2017 | DWG. NO. 009-001-C25.1 | REVISION AB

E:\JVS Technical\Formation Environmental\Pole Canyon\Drawings\As-Built Drawings\SCG_CAD Files\C25-C25point1 - Standard\C25-C25point1.dwg 1/26/2017 5:23 PM

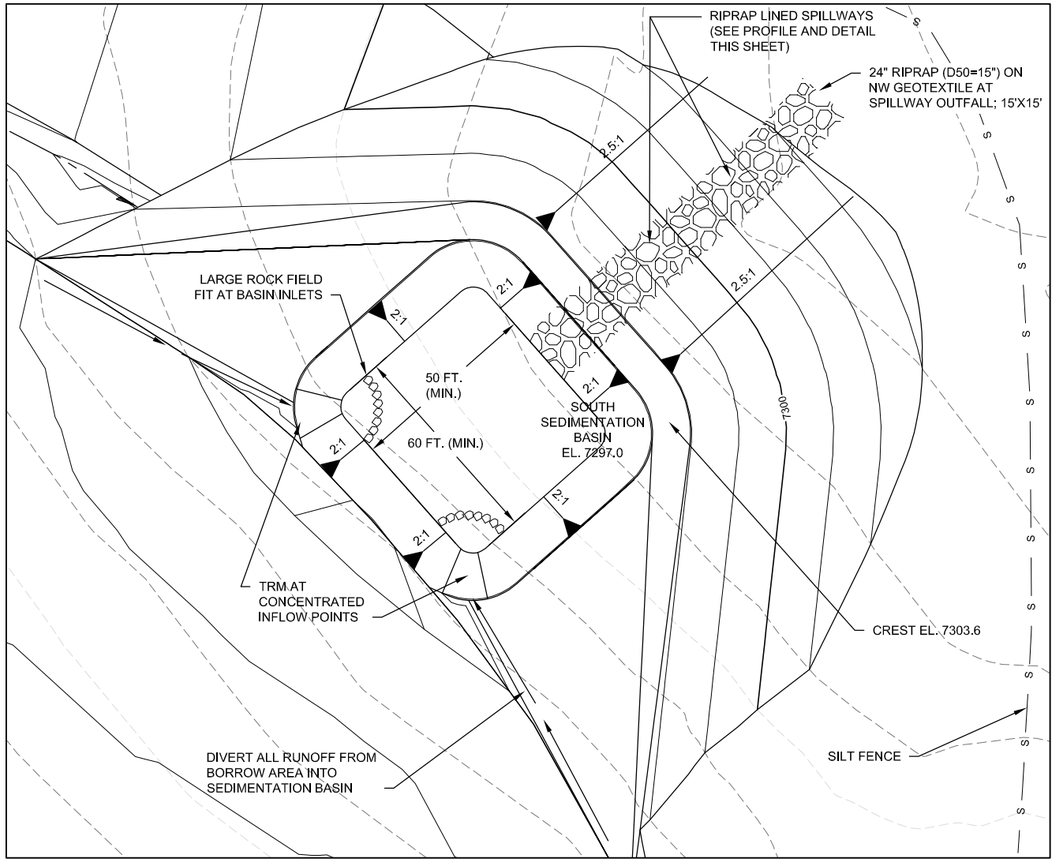

DINWOODY BORROW AREA
SOUTH SEDIMENTATION BASIN PLAN

N

SCALE
20 0 20 FEET

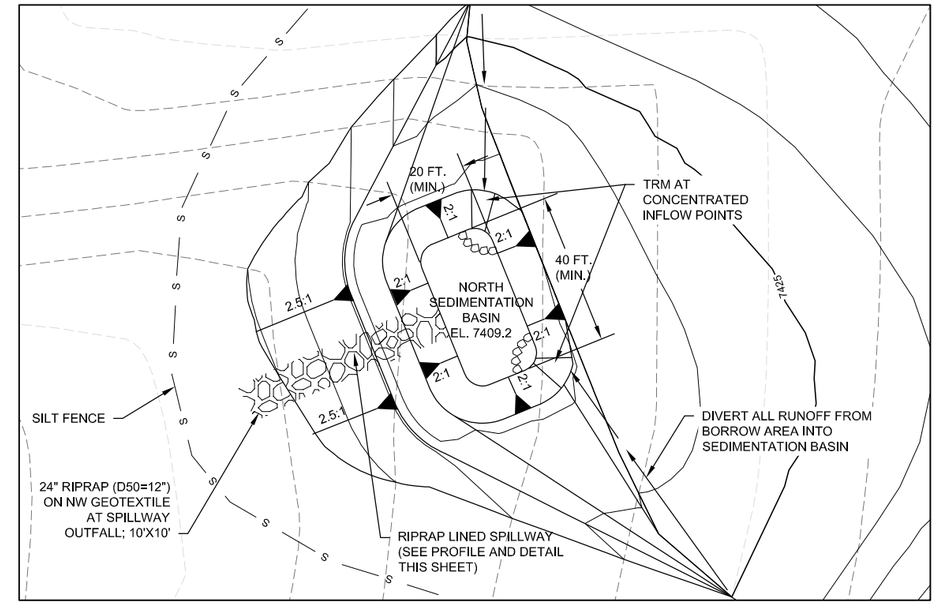

DINWOODY BORROW AREA
NORTH SEDIMENTATION BASIN PLAN

N

SCALE
20 0 20 FEET

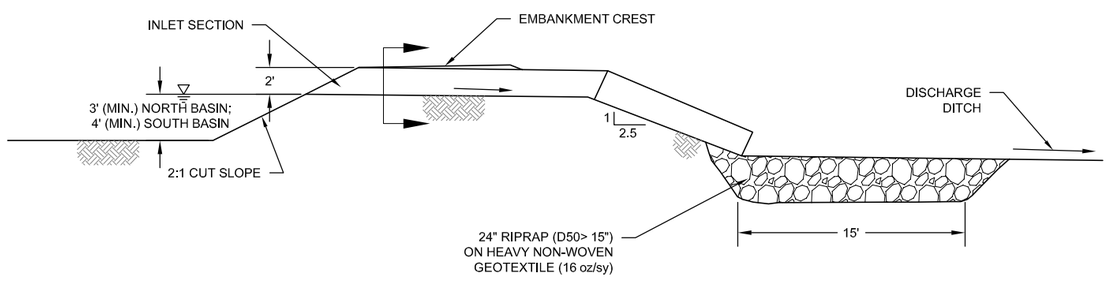

PROFILE - SPILLWAYS

SCALE
5 0 5 FEET

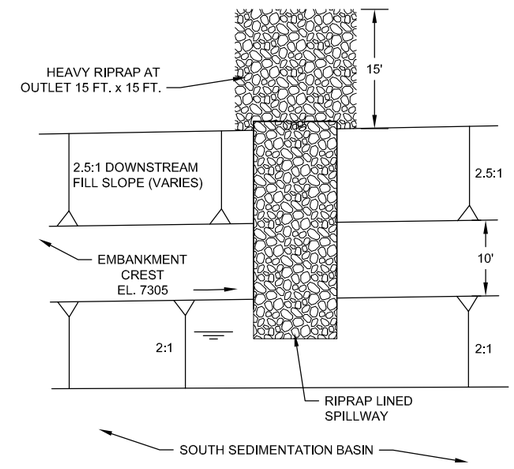

DETAIL - SOUTH SEDIMENTATION BASIN SPILLWAY

NOT TO SCALE

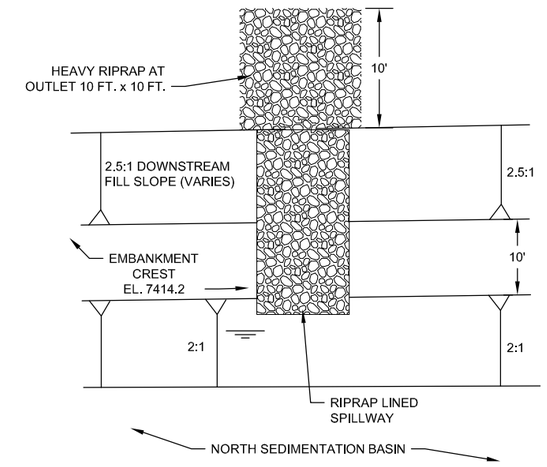

DETAIL - NORTH SEDIMENTATION BASIN SPILLWAY

NOT TO SCALE

REFERENCE	NO.	REVISIONS	BY	DATE
	AB	AS-BUILT	BGH	01/17
	2	ISSUE FOR BID AND CONSTRUCTION	BGH	12/14
	1	ISSUE FOR FINAL REVIEW	BGH	08/14
	0	ISSUE FOR 90% REVIEW	BGH	06/14

KEY MAP

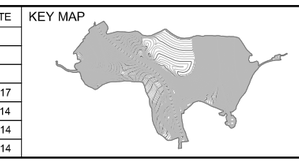

ORIGINAL SIGNED BY: BRIAN G. HANSEN

PROFESSIONAL ENGINEER REGISTERED STATE OF IDAHO BRIAN G. HANSEN 01/27/17

NOT VALID UNLESS SIGNED

FORMATION ENVIRONMENTAL

DESIGNED BY:	JHR
DRAWN BY:	SCG
CHECKED BY:	BGH
APPROVED BY:	BGH
FILE NAME:	009-001-C26.DWG

J.R. SIMPLOT COMPANY - SMOKY CANYON MINE

POLE CANYON ODA-NTCRA

DINWOODY BORROW AREA SEDIMENTATION BASINS - PLANS, SECTIONS AND DETAILS

DATE JANUARY 2017 | DWG. NO. 009-001-C26 | REVISION AB

E:\JVS Technical\Formation Environmental\Pole Canyon\Drawings\As-Built Drawings\SCG_CAD Files\C26-C26point1 - Standard\C26-C26point1.dwg 1/16/2017 7:51 PM

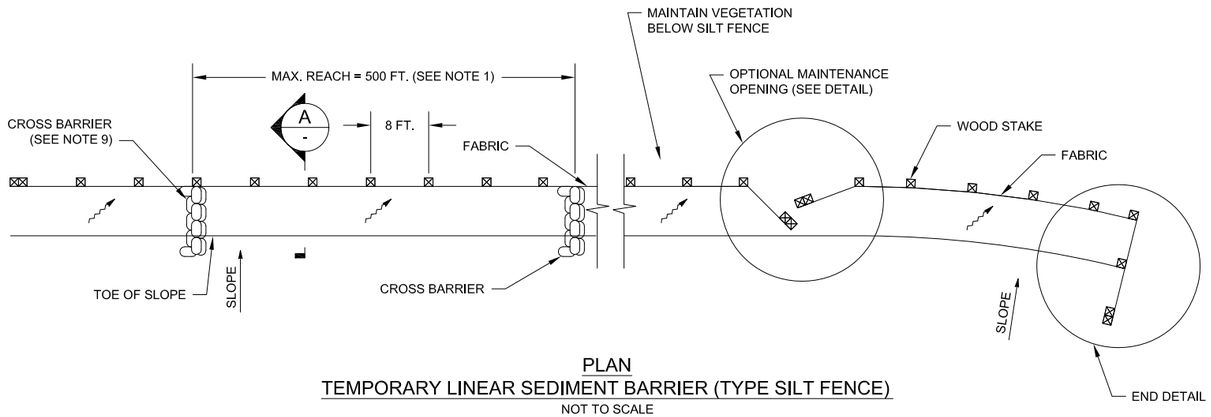

PLAN
TEMPORARY LINEAR SEDIMENT BARRIER (TYPE SILT FENCE)
NOT TO SCALE

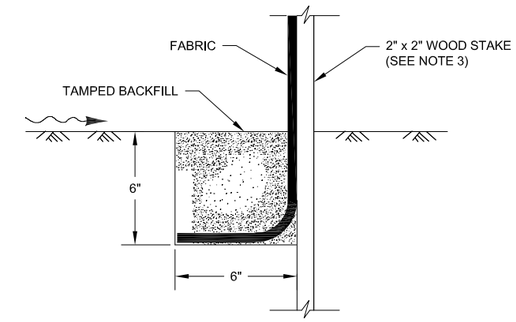

TRENCH DETAIL
NOT TO SCALE

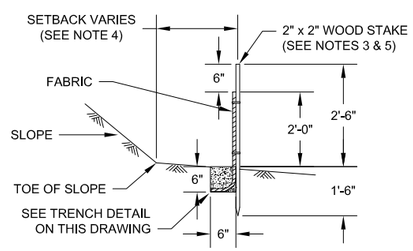

SECTION A
NOT TO SCALE

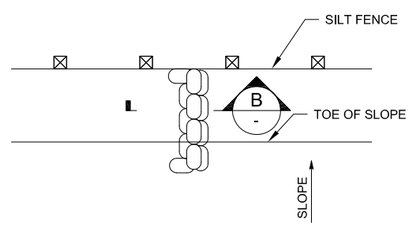

CROSS BARRIER DETAIL
NOT TO SCALE

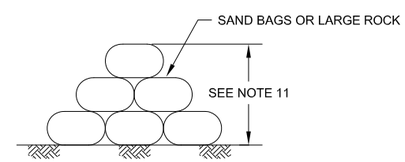

SECTION B
NOT TO SCALE

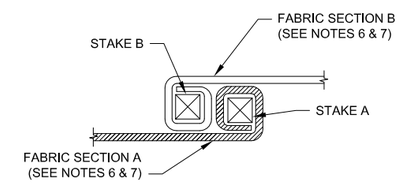

PLAN
POST AT JOINTS
NOT TO SCALE

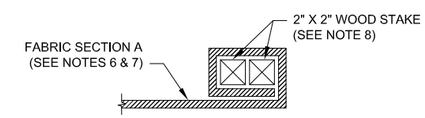

JOINING SECTION DETAIL (TOP VIEW)
NOT TO SCALE

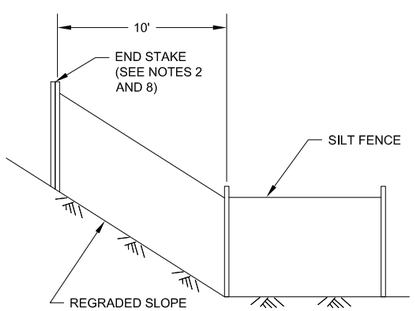

END DETAIL
NOT TO SCALE

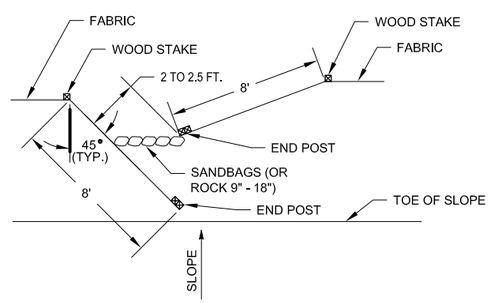

PLAN
OPTIONAL MAINTENANCE OPENING DETAIL
(SEE NOTES 10 AND 11)
NOT TO SCALE

NOTES:

1. CONSTRUCT THE LENGTH OF EACH REACH SO THAT THE CHANGE IN BASE ELEVATION ALONG THE REACH DOES NOT EXCEED 1/3 THE HEIGHT OF THE LINEAR BARRIER, IN NO CASE SHALL THE REACH LENGTH EXCEED 500 FT.
2. THE LAST 10 FT. OF FENCE SHALL BE TURNED UP SLOPE.
3. STAKE DIMENSIONS ARE NOMINAL AND DIMENSIONS SHOWN ARE TYPICAL.
4. DIMENSION MAY VARY TO FIT FIELD CONDITION.
5. STAKES SHALL BE SPACED AT 10 FT. MAXIMUM AND SHALL BE POSITIONED ON DOWNSTREAM SIDE OF FENCE.
6. STAKES TO OVERLAP AND FENCE FABRIC TO FOLD AROUND EACH STAKE ONE FULL TURN. SECURE FABRIC TO STAKE WITH AT LEAST 4 STAPLES.
7. STAKES SHALL BE DRIVEN TIGHTLY TOGETHER TO PREVENT POTENTIAL FLOW-THROUGH OF SEDIMENT AT JOINT. THE TOPS OF THE STAKES SHALL BE SECURED WITH WIRE.
8. FOR END STAKE, FENCE FABRIC SHALL BE FOLDED AROUND TWO STAKES ONE FULL TURN AND SECURED WITH 4 STAPLES.
9. CROSS BARRIERS SHALL BE A MINIMUM OF 1/3 AND A MAXIMUM OF 1/2 THE HEIGHT OF THE LINEAR BARRIER.
10. MAINTENANCE OPENINGS SHALL BE CONSTRUCTED IN A MANNER TO ENSURE SEDIMENT REMAINS BEHIND SILT FENCE.
11. SANDBAGS OR ROCK ROWS AND LAYERS SHALL BE OFFSET TO ELIMINATE GAPS.

REFERENCE	NO.	REVISIONS	BY	DATE
	3	ISSUE FOR BID AND CONSTRUCTION	BGH	12/14
	2	ISSUE FOR FINAL REVIEW	BGH	08/14
	1	ISSUE FOR 90% REVIEW	BGH	06/14
	0	ISSUE FOR REVIEW	BGH	02/14

ORIGINAL SIGNED BY: BRIAN G. HANSEN
PROFESSIONAL ENGINEER REGISTERED STATE OF IDAHO 12/31/14 BRIAN G. HANSEN
NOT VALID UNLESS SIGNED

FORMATION ENVIRONMENTAL

DESIGNED BY:	JHR
DRAWN BY:	SCG
CHECKED BY:	BGH
APPROVED BY:	BGH
FILE NAME:	009-001-C27 .DWG

J.R. SIMPLOT COMPANY - SMOKY CANTON MINE

POLE CANYON ODA NTCRA

EROSION CONTROL DETAILS - SILT FENCES

DATE DECEMBER 2014 | DWG. NO. 009-001-C27 | REVISION 3

C:\Users\Steve\Documents\Formations\Smoky Pole Canyon\Sheet Files\Final – Aug 2014\C27-C28.dwg 1/6/2015 11:40 PM

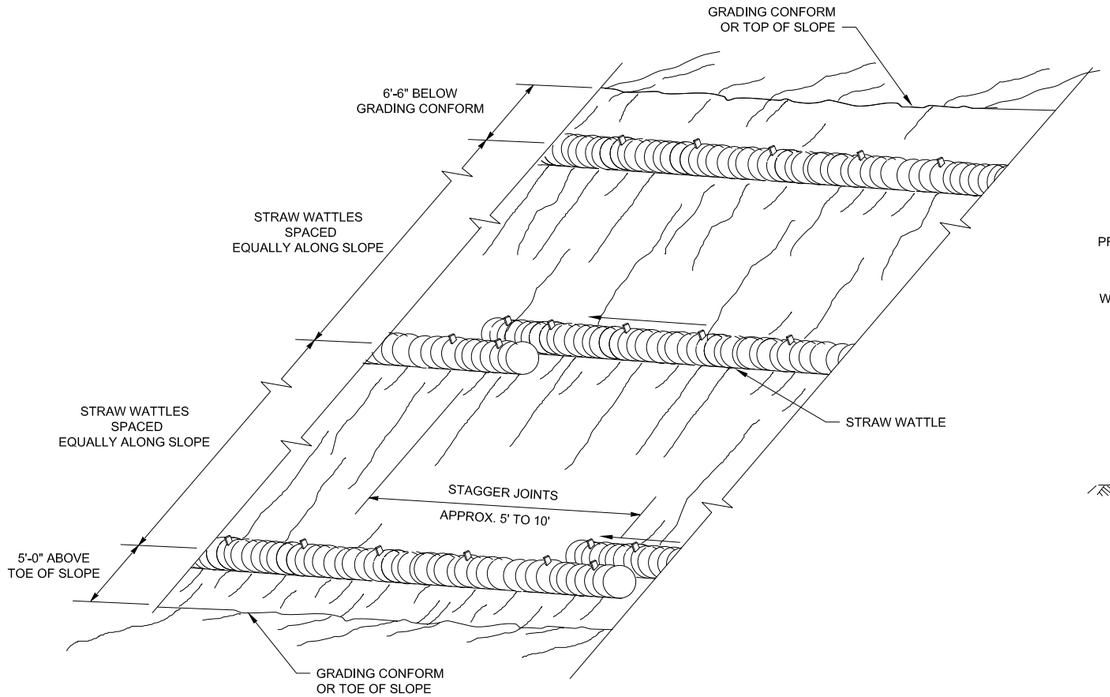

PERSPECTIVE
STRAW WATTLE (TYPE 1)
NOT TO SCALE

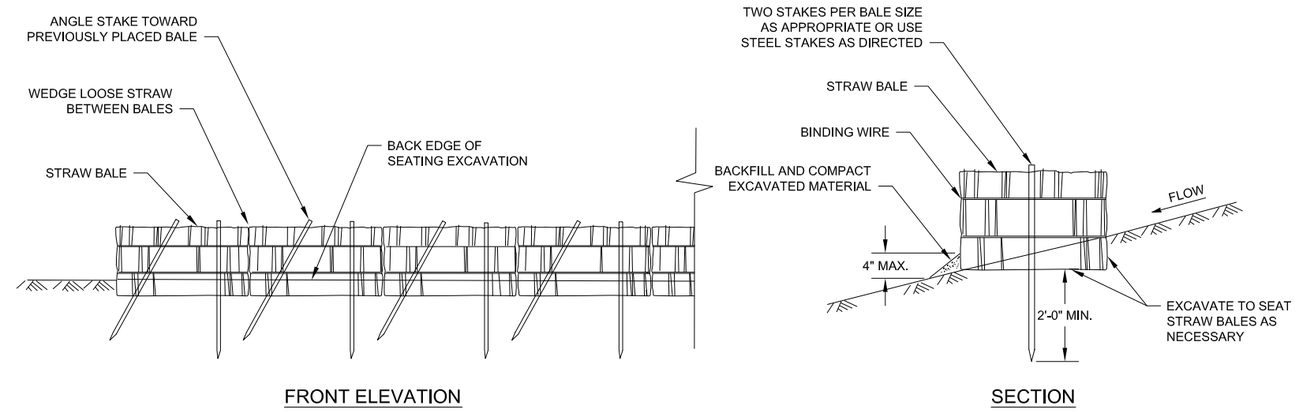

FRONT ELEVATION

SECTION

TYPICAL STRAW BALE BARRIER
NOT TO SCALE

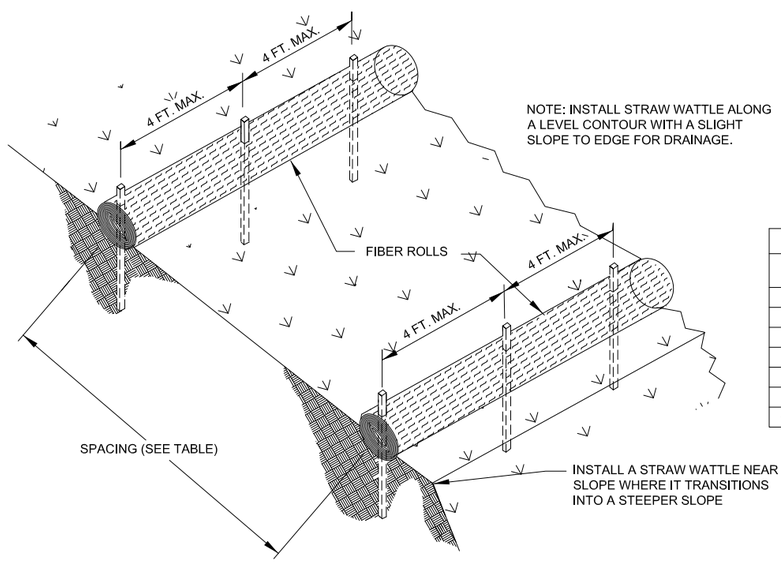

NOTE: INSTALL STRAW WATTLE ALONG A LEVEL CONTOUR WITH A SLIGHT SLOPE TO EDGE FOR DRAINAGE.

TYPICAL FIBER ROLL INSTALLATION
NOT TO SCALE

FIBER ROLL SPACING TABLE

SIDE SLOPE	FIBER ROLL SPACING
1.5:1 TO 2:1	20 FT MAX. (TRM WHERE SHOWN)
2.1 TO 2.5:1	25 FT MAX.
2.6 TO 3:1	30 FT MAX.
3.1 TO 3.5:1	35 FT MAX.
3.6 TO 4:1	40 FT MAX.
4.1 TO 4.5:1	45 FT MAX.
4.6:1 OR FLATTER	50 FT MAX.

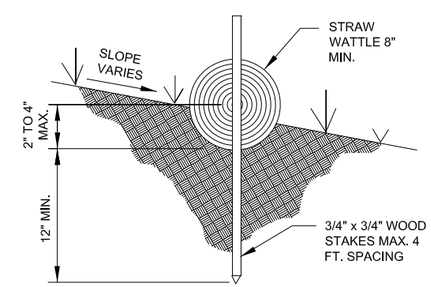

ENTRENCHMENT DETAIL
NOT TO SCALE

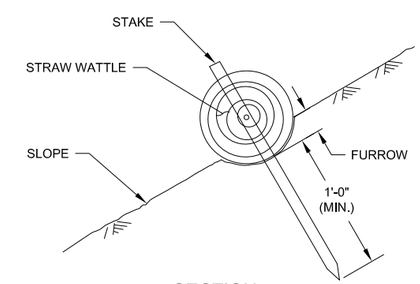

SECTION
STRAW WATTLE
(TYPE 1)
NOT TO SCALE

NOTES:

1. PLACEMENT OF FIBER ROLLS (STRAW WATTLES) AND STRAW BALES TO BE FIELD DIRECTED.
2. STRAW BALES MAY BE USED IN PLACE OF PERIMETER SILT FENCE.
3. FIBER ROLLS (STRAW WATTLES) SHALL BE USED ON COVERED SIDE SLOPES AS DIRECTED.

REFERENCE	NO.	REVISIONS	BY	DATE
	3	ISSUE FOR BID AND CONSTRUCTION	BGH	12/14
	2	ISSUE FOR FINAL REVIEW	BGH	08/14
	1	ISSUE FOR 90% REVIEW	BGH	06/14
	0	ISSUE FOR REVIEW	BGH	02/14

ORIGINAL SIGNED BY: BRIAN G. HANSEN
PROFESSIONAL ENGINEER REGISTERED STATE OF IDAho 12/31/14 BRIAN G. HANSEN
NOT VALID UNLESS SIGNED

FORMATION ENVIRONMENTAL

DESIGNED BY:	JHR
DRAWN BY:	SCG
CHECKED BY:	BGH / BAP
APPROVED BY:	BGH
FILE NAME:	009-001-C28 .DWG

J.R. SIMPLOT COMPANY - SMOKY CANYON MINE

POLE CANYON ODA NTCRA

EROSION CONTROL DETAILS - STRAW WATTLES AND BALES

DATE DECEMBER 2014 | DWG. NO. 009-001-C28 | REVISION 3

C:\Users\Steve\Documents\Formations\Smoky Pole Canyon\Sheet Files\Final – Aug 2014\C27-C28.dwg 1/6/2015 11:40 PM

SIMPLOT SMOKY CANYON MINE
POLE CANYON BYPASS
AUGUST, 2006

AREA MAP

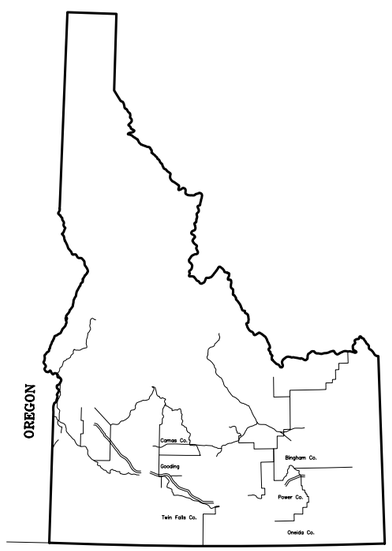

SMOKY

SCALE: 1”=140 mi.

LOCATION MAP

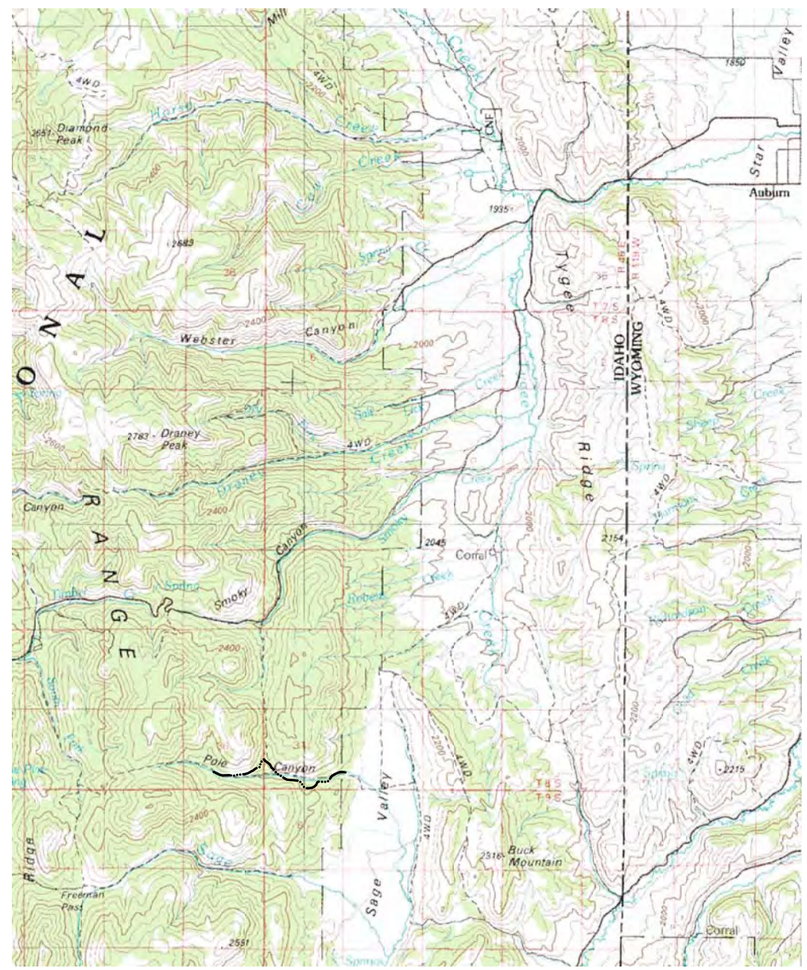

SCALE: 1”=10,000’

SUNRISE ENGINEERING
47 EAST 4th AVENUE, P.O. BOX 609
AFTON, WY 83110
TEL 307.885.8500 · FAX 307.885.8501
www.sunrise-eng.com

ABBREVIATIONS

ASSY.	ASSEMBLY
∠	ANGLE
@	AT (MEASUREMENTS)
BLDG.	BUILDING
B.M.	BENCH MARK
BSC	BITUMINOUS SURFACE COURSE
BSW	BACK OF SIDEWALK
B.W.	BOTH WAYS
C	CHANNEL (STRUCTURAL)
℄	CENTER LINE
CMP	CORRUGATED METAL PIPE
CO	CLEANOUT
CONC.	CONCRETE
CONT.	CONTINUOUS
CPLG.	COUPLING
CU. FT.	CUBIC FEET
CU. YD.	CUBIC YARD
DEG. OR °	DEGREE
DET.	DETAIL
DIA. OR ø	DIAMETER
DIM	DIMENSION
DIST.	DISTRIBUTION
DWG.	DRAWING
EA.	EACH
ELB.	ELBOW
ELEV.	ELEVATION
E.W.	EACH WAY
EXIST.	EXISTING
F.G.	FINISH GRADE
FLEX.	FLEXIBLE
FLG.	FLANGE
FT OR '	FEET
GV	GATE VALVE
HORIZ.	HORIZONTAL
ID	INSIDE DIAMETER
IN. OR "	INCH
LB. OR #	POUND
LF	LINEAL FEET
LN.	LINEAL
MAX.	MAXIMUM
MIN.	MINIMUM
NO. or #	NUMBER
PE	POLYETHYLENE
PE. PIPE	POLYETHYLENE PIPE
PL.	PLATE
ℙ	PROPERTY LINE
PVC	POLYVINYL-CHLORIDE PIPE
R	RADIUS
R&R	REMOVE & REPLACE
REM.	REMOVE
REQ'D	REQUIRED
REV.	REVISION
R/W	RIGHT-OF-WAY
S	SLOPE
SPEC.	SPECIFICATION
STA	STATION
STD.	STANDARD
STL.	STEEL
ST. STL.	STAINLESS STEEL
TBC	TOP BACK OF CURB
TYP.	TYPICAL
W/	WITH
W/O	WITHOUT
W/REQ'D.	WHERE REQUIRED

LEGEND

CROSS REFERENCING — DETAIL DESIGNATION / SHEET NUMBER

NEW CONTOURS
EXIST. CONTOURS
EXIST. FEATURES
EXIST. WATER — W 2
NEW WATER — W 8
EXIST. GAS — GAS
EXIST. TELEPHONE — T
EXIST. SEWER — S 8
NEW SEWER — S 8
EXIST. SUBSURFACE DRAIN — 0" SD
EXIST. IRRIGATION — IRR
EXIST. BURIED POWER — P
BENCH MARK
EXIST. GATE VALVE
EXIST. PRESSURE REDUCING VALVE
EXIST. BLOWOFF VALVE
EXIST. AIR RELEASE VALVE
EXIST. PUMP
EXIST. REDUCER
EXIST. PLUG
EXIST FLEX. COUPLING
NEW FLEX. COUPLING
EXIST. FIRE HYDRANT
NEW FIRE HYDRANT STUB
NEW FIRE HYDRANT
EXIST. WATER SERVICE CONN.
NEW SERVICE LATERAL
NEW METER
EXIST. GAS SERVICE CONN.
NEW GAS SERVICE CONN.
NEW GATE VALVE

NEW PRESSURE REDUCING VALVE
NEW BLOWOFF VALVE
NEW AIR RELEASE VALVE
NEW REDUCER
EXIST. CROSS
NEW CROSS
EXIST. TEE
NEW TEE
NEW ELBOW
EXIST. ELBOW
NEW BEND
EXIST. BEND
NEW WYE
EXIST. WYE
NEW PLUG
EXIST FLEX. COUPLING
EXIST. FIRE HYDRANT
EXIST. WATER SERVICE CONN.
NEW WATER SERVICE CONN.
EXIST. SEWER SERVICE
NEW SEWER SERVICE
EXIST. GAS SERVICE CONN.
EXIST. STOCK FENCE
EXIST. CHAINLINK FENCE
SURFACE WATER FLOW
POWER POLE
EXIST. MANHOLE
NEW MANHOLE
EXIST. CLEANOUT

SLOPE (PLAN VIEW) — TOP OF SLOPE / TOE OF SLOPE

SOIL TEST PIT
EXIST. STORM SEWER INLET — OR

CONSTRUCTION NOTES

1. THE CONTRACTOR SHALL COORDINATE ALL WORK WITH SMOKY CANYON MINE AND SHALL FOLLOW THE MINE'S CONSTRUCTION REQUIREMENTS, PROCEDURES, AND STANDARDS.
2. THE CONTRACTOR SHALL OBTAIN ALL SAFETY TRAINING AND CERTIFICATIONS REQUIRED BY SIMPLOT SMOKY CANYON MINE AND THE MINE SAFETY AND HEALTH ADMINISTRATION (MSHA).
3. ALL EXCAVATIONS, TRENCHING, AND SHORING SHALL MEET THE REQUIREMENTS OF THE IDAHO OCCUPATIONAL HEALTH AND SAFETY COMMISSION – CHAPTER XVI.
4. ALL WORK SHALL CONFORM TO THE SUNRISE ENGINEERING, INC. STANDARD DETAILS AND SPECIFICATIONS.
5. ALL WORK SHALL CONFORM TO APPLICABLE USDA FOREST SERVICE PERMITS.
6. ALL PIPELINES SHALL BE INSTALLED AT THE LOCATIONS AND DEPTHS REQUIRED ON THE PLANS OR AS OTHERWISE DIRECTED BY THE ENGINEER. ALL PIPELINES SHALL BE PLACED WITH A MINIMUM 2'-0" COVER OVER THE TOP OF THE PIPE.
7. ALL DEBRIS RESULTING FROM THE PROJECT SHALL BE DISPOSED OF BY THE CONTRACTOR AT HIS EXPENSE. FINAL GRADE OF DISTURBED AREAS IS SUBJECT TO THE ENGINEER'S APPROVAL AND IS TO BE DONE WITH NEAT WORKMANSHIP.
8. THE CONTRACTOR SHALL BE RESPONSIBLE FOR LOCATING AND PROTECTING ALL UTILITIES FROM DAMAGE.
9. THE CONTRACTOR SHALL OBTAIN A STORM WATER PERMIT AND SHALL BE RESPONSIBLE FOR ALL STORM WATER MITIGATION.
10. NO DOWN-SLOPE WASTING OF SOILS IS PERMITTED BETWEEN STA. 0+00 AND STA 4+00. IN ALL CASES THE STREAM SHALL BE PROTECTED.

DESIGN CRITERIA

INTAKE STRUCTURE
CAPACITY OF WIER ABOVE TRASHRACK = 44 CFS@1.75' DEPTH
CAPACITY OF ORIFICE INTO SEDIMENT CHAMBER = 44 CFS @0.29' HEAD
CAPACITY OF WEIR INTO PIPE INLET = 44 CFS@1.43' HEAD, HGL. = 7453.2
PIPE INLET CAPACITY = 44 CFS@2.85' ABOVE CL PIPE. HGL. = 7451.6
GRIZZLY OVERFLOW = HGL 7453.5@44CFS
MAX. VELOCITY = 40 FT/SEC. IN FUSED HDPE SECTION
MAX VELOCITY = 26 FT/SEC. IN CORRUGATED HDPE

OUTLET STRUCTURE – IMPACT TYPE STILLING BASIN
INLET VELOCITY = 19 FT/SEC
INLET FLOW DEPTH = 16.3 INCHES
OUTLET WIER DEPTH = 1.4 FEET @44 CFS.
OUTLET WEIR VELOCITY = 3.9 FT/SEC.

REV NO.	COMMENT	DATE

SUNRISE ENGINEERING
47 EAST 4TH AVENUE / PO BOX 609
AFTON, WYOMING 83110
TEL 307.885.8500 · FAX 307.885.8501
www.sunrise-eng.com

SIMPLOT SMOKY CANYON MINE

POLE CANYON BYPASS
ABBREVIATIONS, LEGEND, CONSTRUCTION NOTES, DESIGN CRITERIA

SEI NO.	DESIGNED	DRAWN	CHECKED	SHEET NO.	
02290	FDK	TLD	EJS	2 of 23	G2

REV NO.	COMMENT	DATE

SUNRISE ENGINEERING
47 EAST 4TH AVENUE / PO BOX 609
AFTON, WYOMING 83110
TEL 307.885.8500 · FAX 307.885.8501
www.sunrise-eng.com

SIMPLOT SMOKY CANYON MINE

POLE CANYON BYPASS
PLAN AND PROFILE INDEX SHEET

SEI NO.	DESIGNED	DRAWN	CHECKED	SHEET NO.	
02290	FDK	TLD	EJS	3 of 23	I1

P:\Simplot Smoky Canyon Mine\Pole Canyon Bypass 02290\Cad\dwg\Titlesheet-G2-Index.dwg Oct 18, 2006 2:19pm Robert Hood

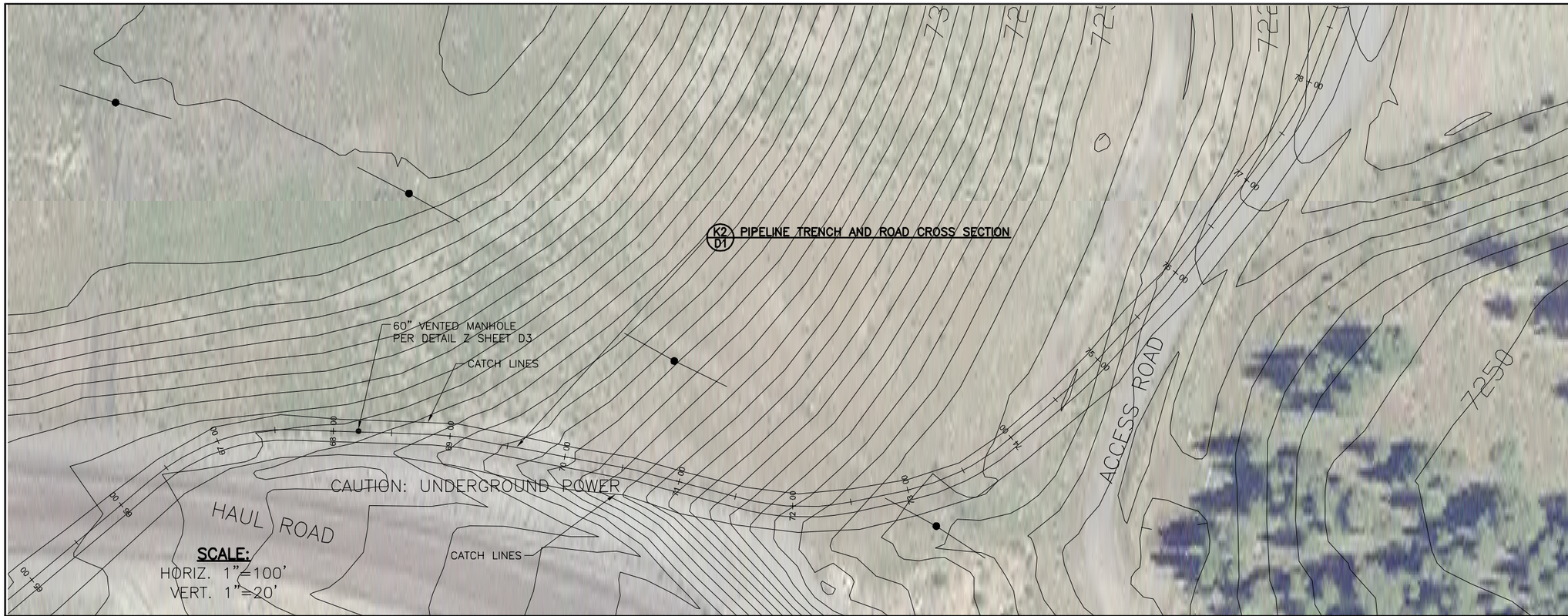

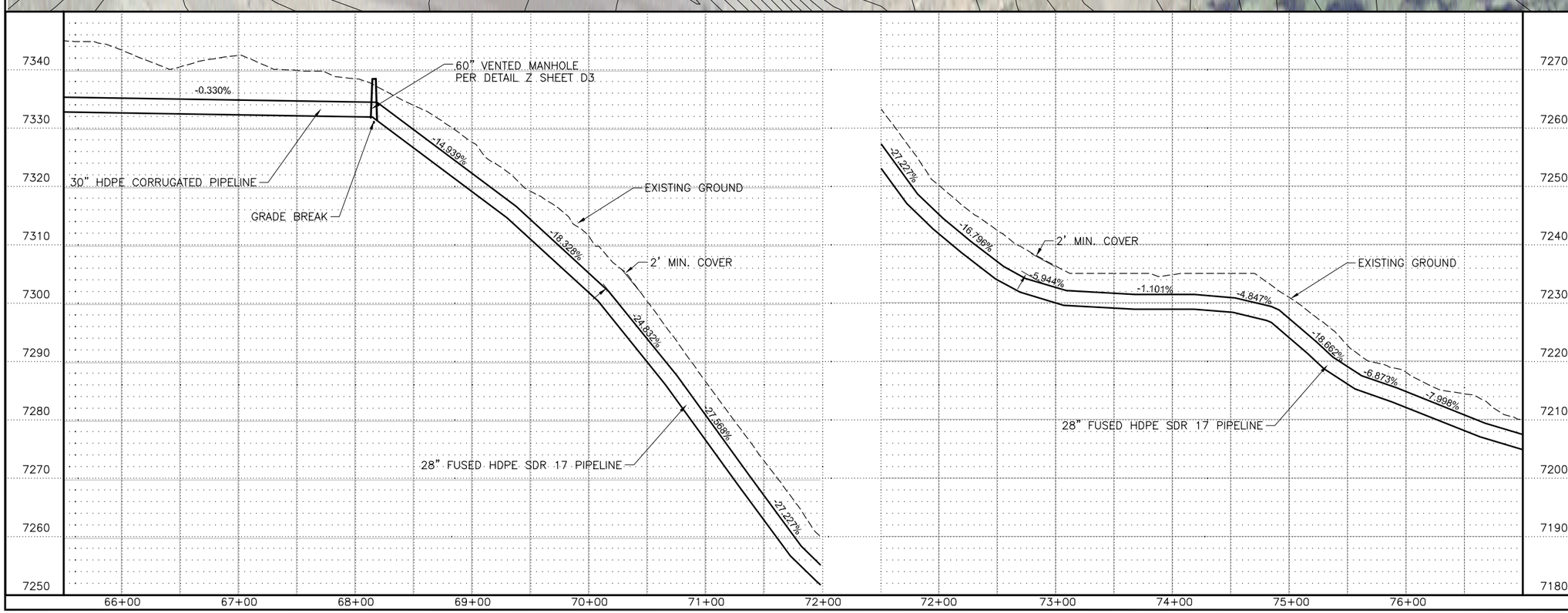

REV NO.	COMMENT	DATE

SUNRISE ENGINEERING
47 EAST 4TH AVENUE / PO BOX 609
AFTON, WYOMING 83110
TEL 307.885.8500 · FAX 307.885.8501

SIMPLOT SMOKY CANYON MINE

POLE CANYON BYPASS
PIPELINE PLAN AND PROFILE

SEI NO.	DESIGNED	DRAWN	CHECKED	SHEET NO.	
02290	FDK	TLD	EJS	10 of 23	PP7

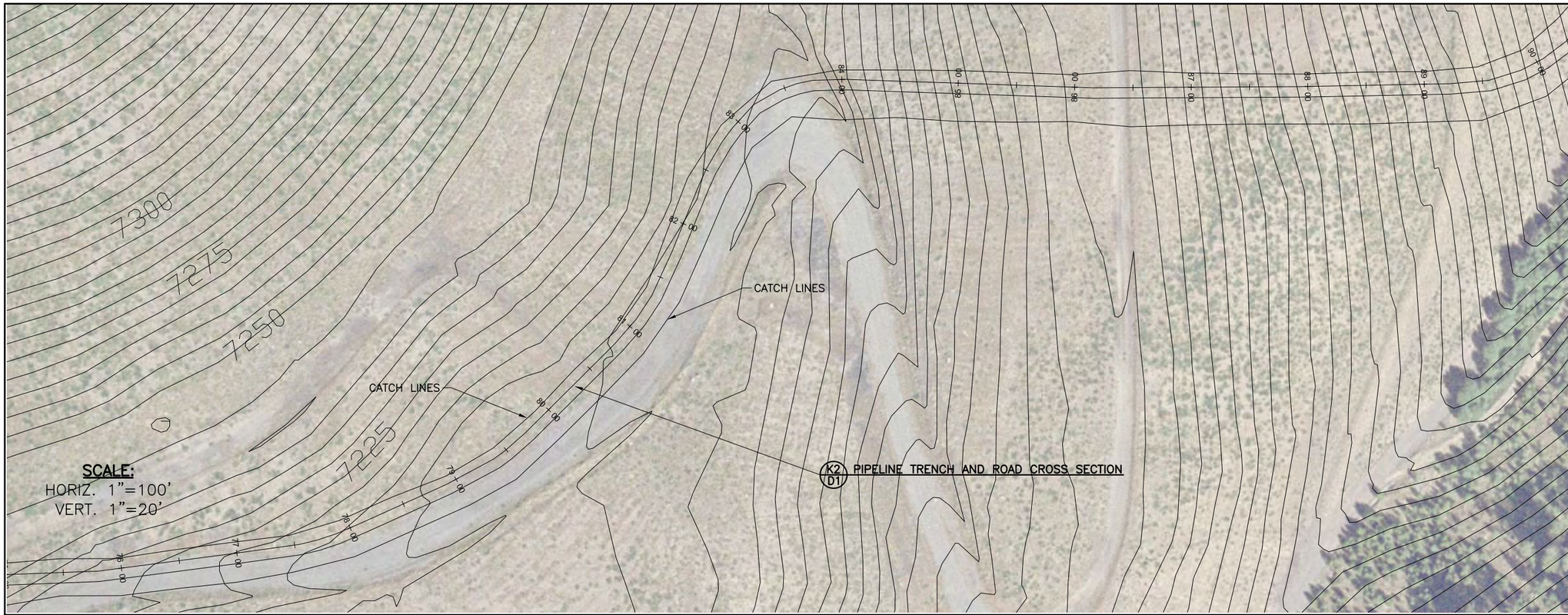

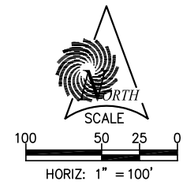

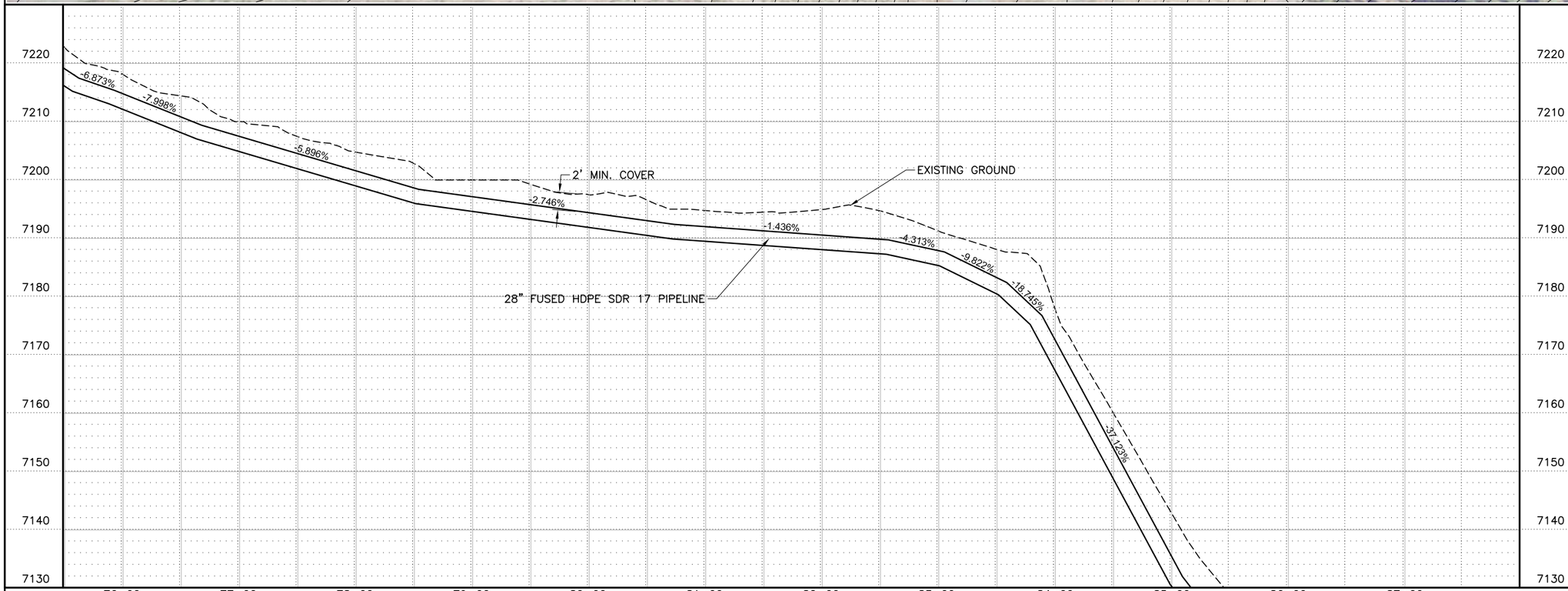

REV NO.	COMMENT	DATE

SUNRISE ENGINEERING
47 EAST 4TH AVENUE / PO BOX 609
AFTON, WYOMING 83110
TEL 307.885.8500 · FAX 307.885.8501

SIMPLOT SMOKY CANYON MINE

POLE CANYON BYPASS
PIPELINE PLAN AND PROFILE

SEI NO.	DESIGNED	DRAWN	CHECKED	SHEET NO.	
02290	FDK	TLD	EJS	11 of 23	PP8

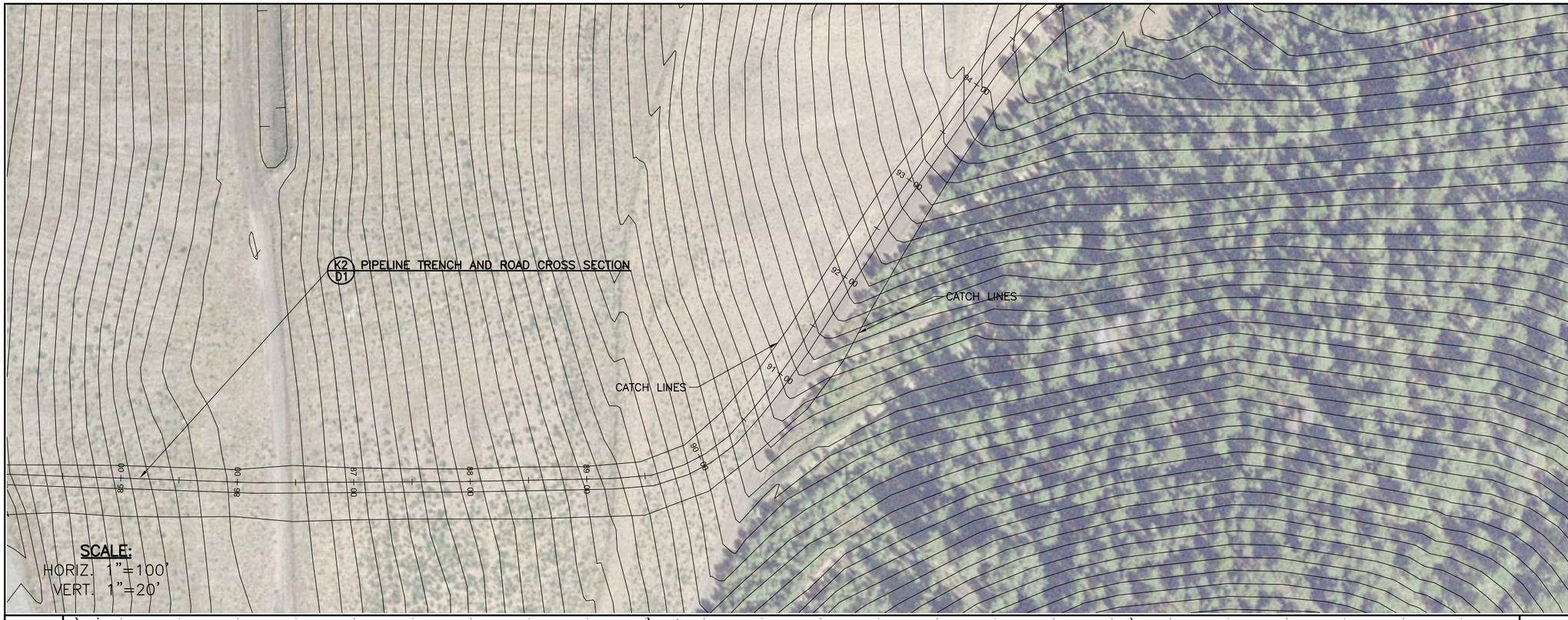

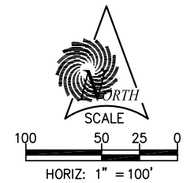

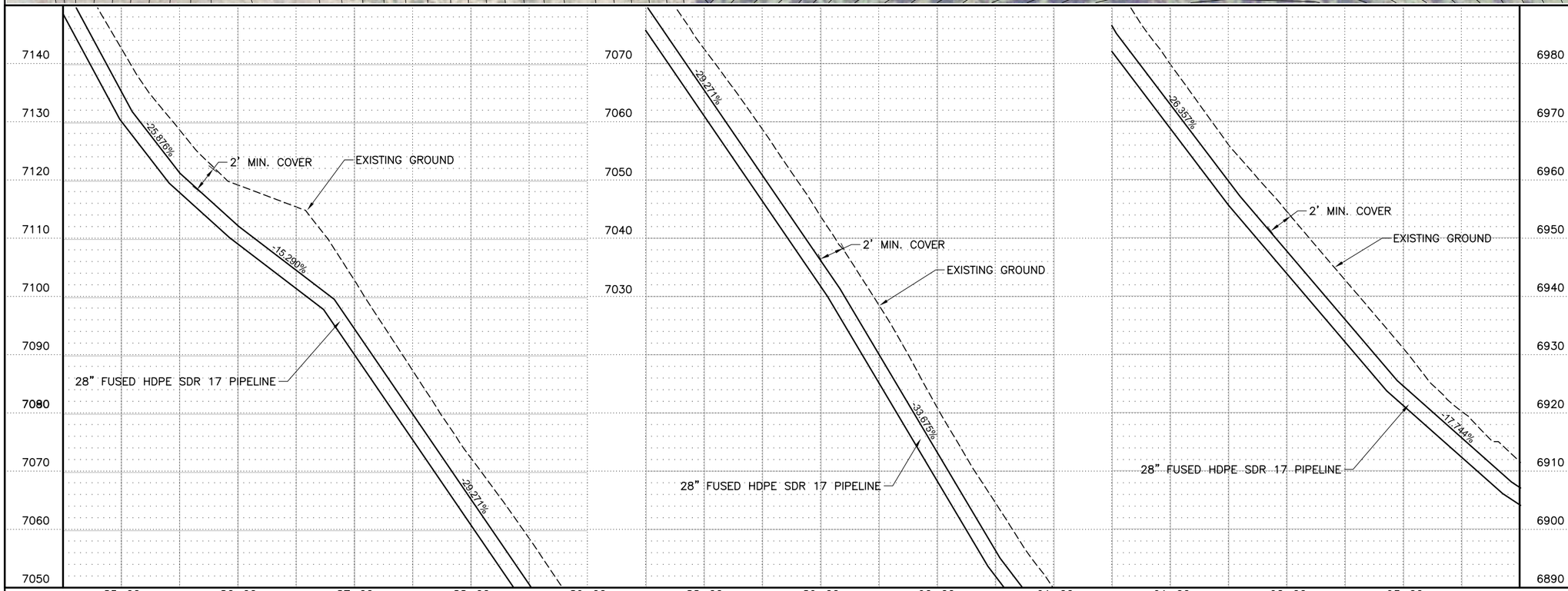

REV NO.	COMMENT	DATE

SUNRISE ENGINEERING
47 EAST 4TH AVENUE / PO BOX 609
AFTON, WYOMING 83110
TEL 307.885.8500 · FAX 307.885.8501

SIMPLOT SMOKY CANYON MINE

POLE CANYON BYPASS
PIPELINE PLAN AND PROFILE

SEI NO.	DESIGNED	DRAWN	CHECKED	SHEET NO.	
02290	FDK	TLD	EJS	12 of 23	PP9

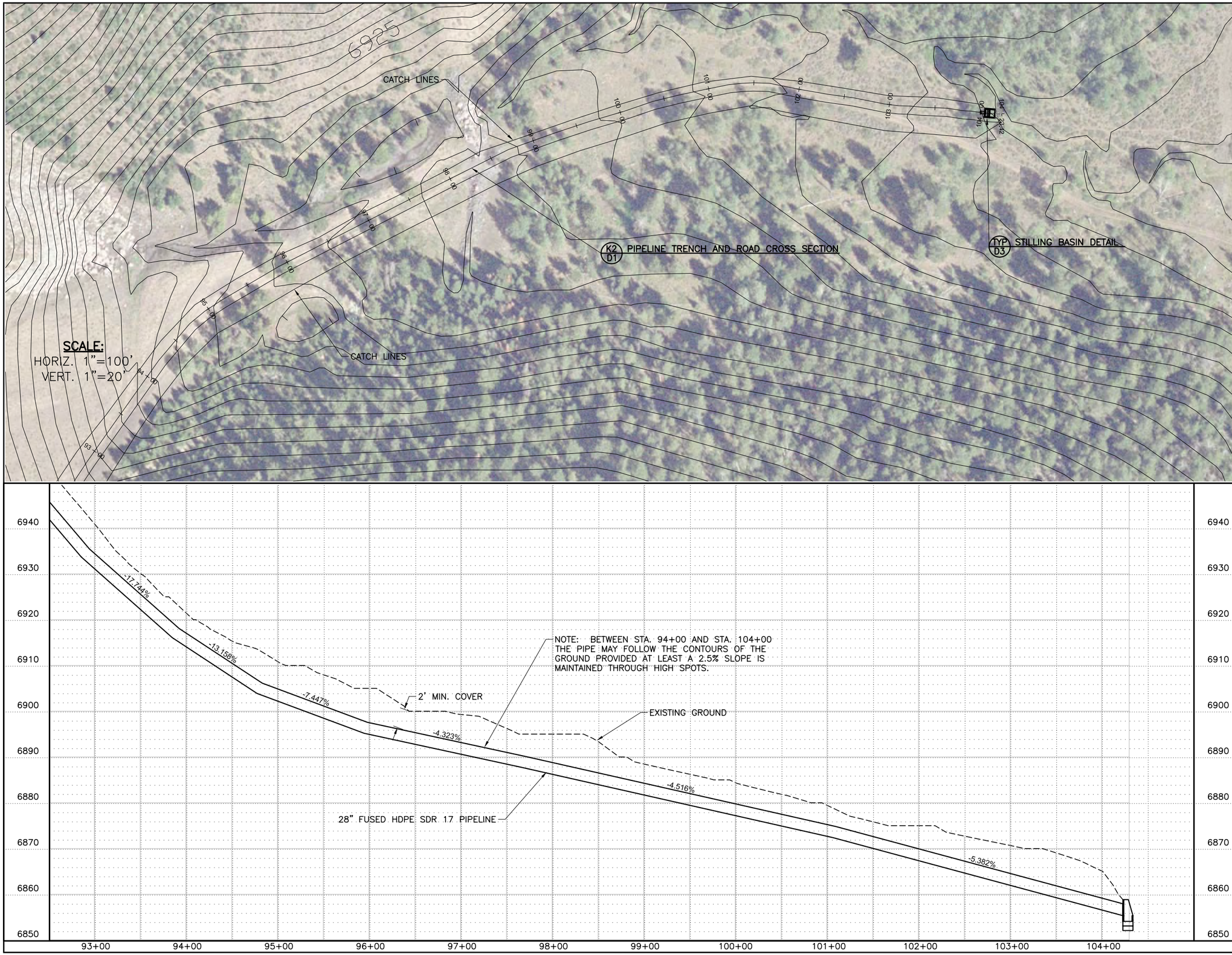

REV NO.	COMMENT	DATE

SUNRISE ENGINEERING
47 EAST 4TH AVENUE / PO BOX 609
AFTON, WYOMING 83110
TEL 307.885.8500 · FAX 307.885.8501

SIMPLOT SMOKY CANYON MINE

POLE CANYON BYPASS
PIPELINE PLAN AND PROFILE

SEI NO.	DESIGNED	DRAWN	CHECKED	SHEET NO.	
02290	FDK	TLD	EJS	13 of 23	PP10

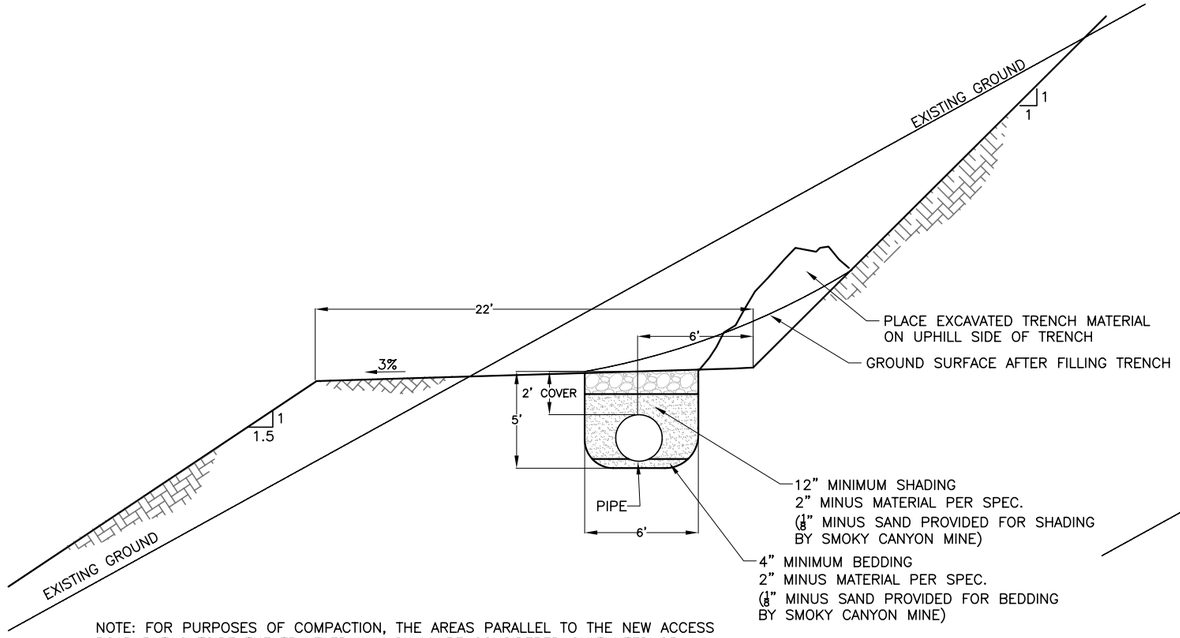

NOTE: FOR PURPOSES OF COMPACTION, THE AREAS PARALLEL TO THE NEW ACCESS ROAD BUT OUTSIDE THE TRAVELED WAY SHALL BE CONSIDERED CULTIVATED OR LANDSCAPED PER SECTION 02200 AND BEDDING, SHADING, AND BACKFILL SHALL BE COMPACTED TO 85%. IN AREAS WHERE THE PIPE FALLS INSIDE THE TRAVELED ROAD OR AT ROAD CROSSINGS, COMPACTION SHALL BE 95% PER SECTION 02200.

K TYP — PIPELINE TRENCH AND ROAD CROSS–SECTION
SCALE 1" = 8'–0"
STA. 5+00 TO STA. 54+00

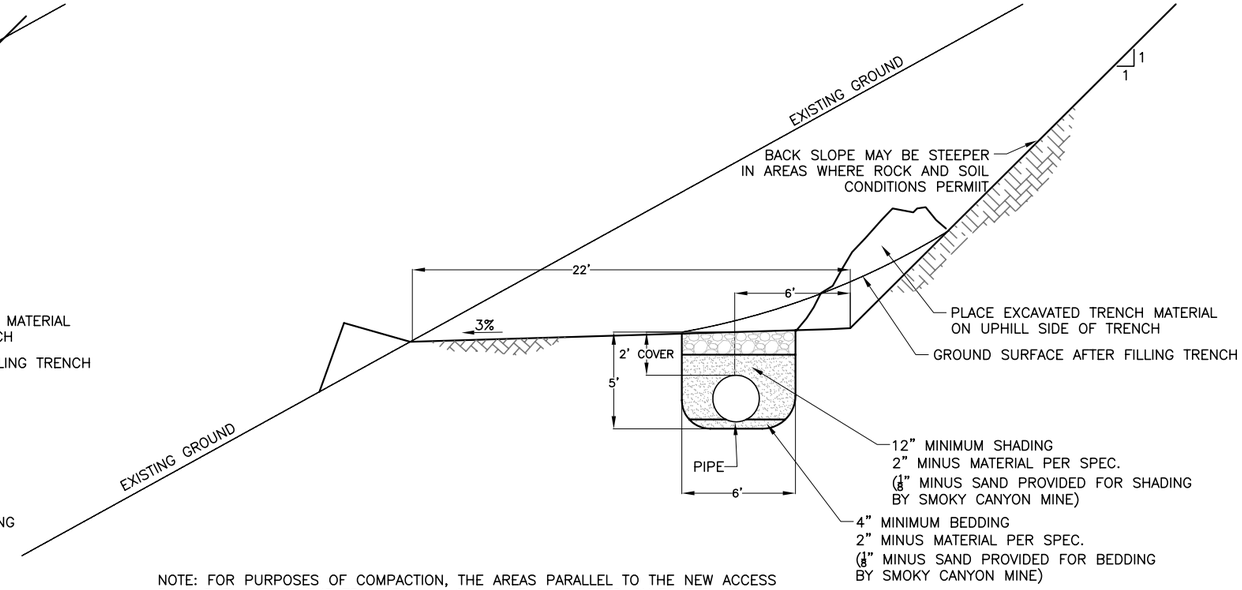

NOTE: FOR PURPOSES OF COMPACTION, THE AREAS PARALLEL TO THE NEW ACCESS ROAD BUT OUTSIDE THE TRAVELED WAY SHALL BE CONSIDERED CULTIVATED OR LANDSCAPED PER SECTION 02200 AND BEDDING, SHADING, AND BACKFILL SHALL BE COMPACTED TO 85%. IN AREAS WHERE THE PIPE FALLS INSIDE THE TRAVELED ROAD OR AT ROAD CROSSINGS, COMPACTION SHALL BE 95% PER SECTION 02200.

K1 TYP — PIPELINE TRENCH AND ROAD CROSS–SECTION
SCALE 1" = 8'–0"
STA. 0+00 TO STA. 5+00

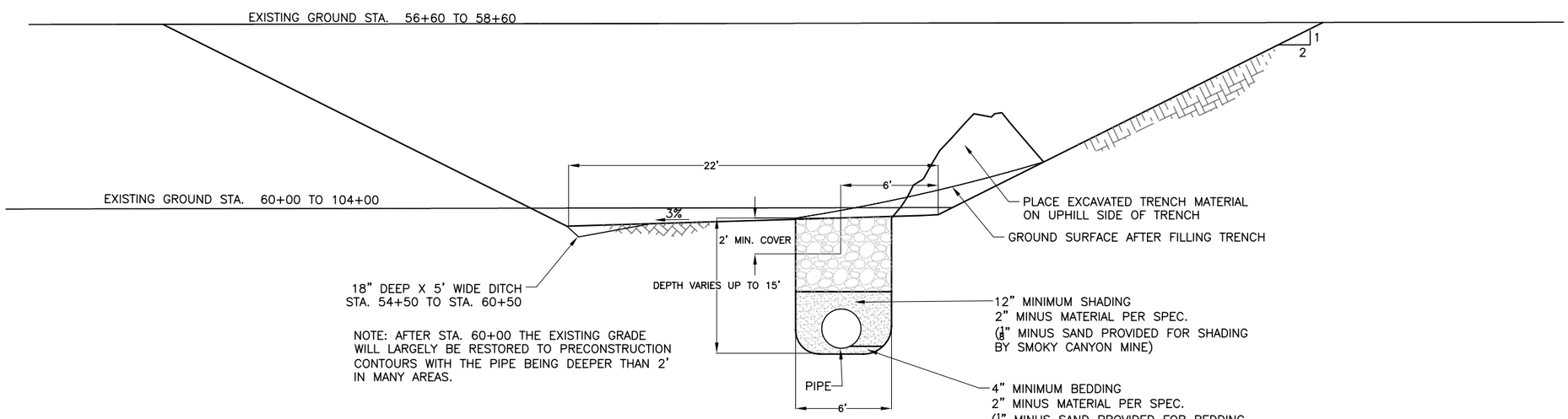

NOTE: AFTER STA. 60+00 THE EXISTING GRADE WILL LARGELY BE RESTORED TO PRECONSTRUCTION CONTOURS WITH THE PIPE BEING DEEPER THAN 2' IN MANY AREAS.

NOTE: FOR PURPOSES OF COMPACTION, THE AREAS PARALLEL TO THE NEW ACCESS ROAD BUT OUTSIDE THE TRAVELED WAY SHALL BE CONSIDERED CULTIVATED OR LANDSCAPED PER SECTION 02200 AND BEDDING, SHADING, AND BACKFILL SHALL BE COMPACTED TO 85%. IN AREAS WHERE THE PIPE FALLS INSIDE THE TRAVELED ROAD OR AT ROAD CROSSINGS, COMPACTION SHALL BE 95% PER SECTION 02200.

K2 TYP — PIPELINE TRENCH AND ROAD CROSS–SECTION
SCALE 1" = 8'–0"
STA. 55+00 TO STA. 60+00
STA. 60+00 TO STA. 104+00

REV NO.	COMMENT	DATE

SUNRISE ENGINEERING
47 EAST 4TH AVENUE / PO BOX 609
AFTON, WYOMING 83110
TEL 307.885.8500 · FAX 307.885.8501
www.sunrise-eng.com

SIMPLOT SMOKY CANYON MINE

POLE CANYON BYPASS
PIPELINE TRENCH AND ROAD CROSS–SECTION

SEI NO.	DESIGNED	DRAWN	CHECKED	SHEET NO.	
02290	EJS	TLD	FDK	14 of 23	D1

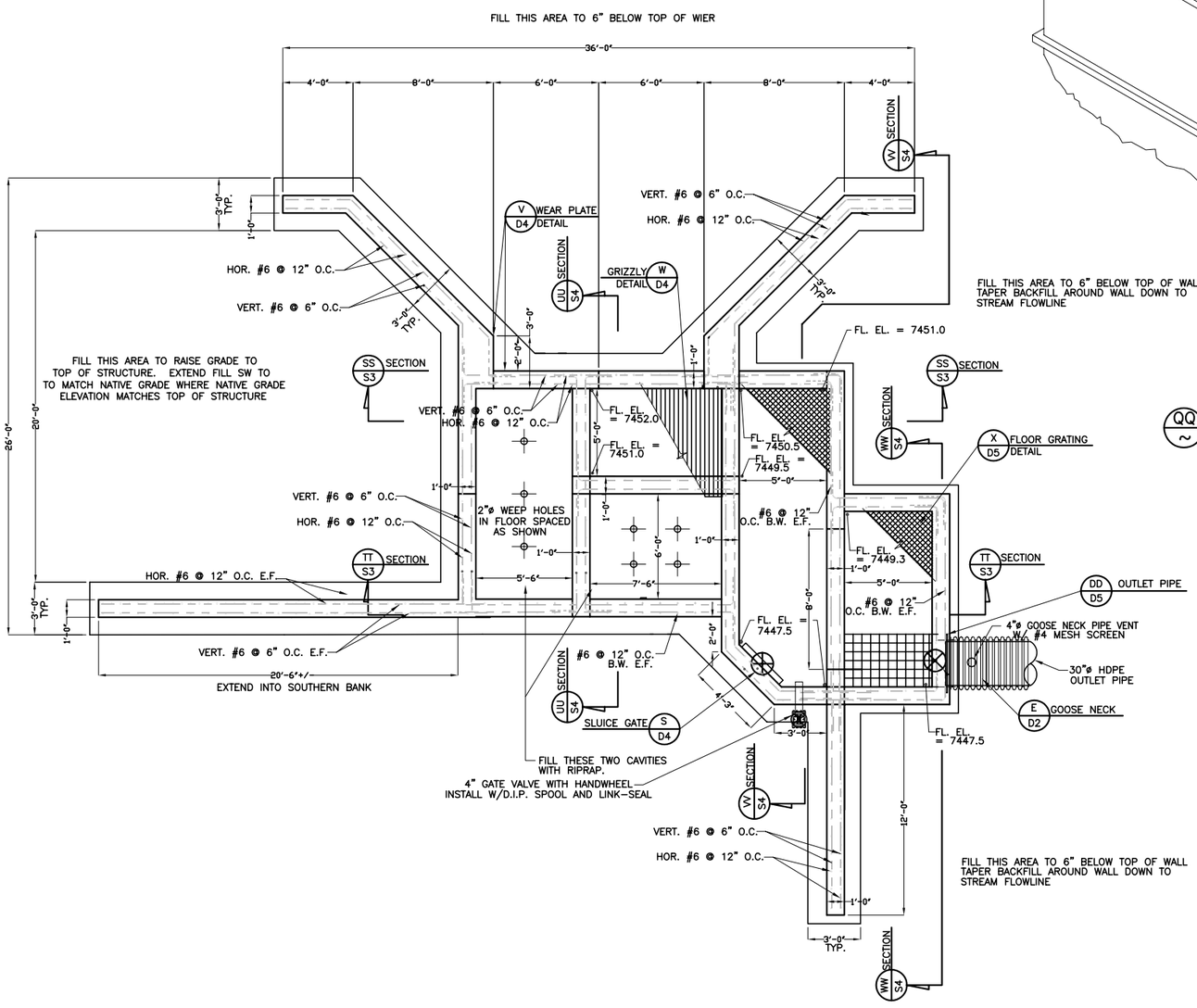

RR PP1 PLAN – POLE CANYON CREEK DIVERSION STRUCTURE
SCALE 1" = 8'-0"

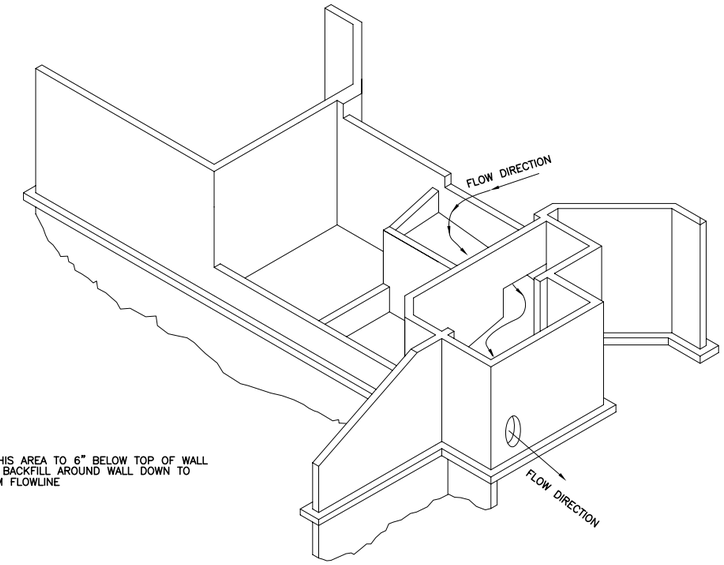

QQ ~ PERSPECTIVE VIEW

REV NO.	COMMENT	DATE

SUNRISE ENGINEERING
47 EAST 4TH AVENUE / PO BOX 609
AFTON, WYOMING 83110
TEL 307.885.8500 · FAX 307.885.8501
www.sunrise-eng.com

SIMPLOT SMOKY CANYON MINE

POLE CANYON BYPASS
DIVERSION STRUCTURE DETAILS

SEI NO.	DESIGNED	DRAWN	CHECKED	SHEET NO.	
02290	EJS	TLD	FDK	15 of 23	D2

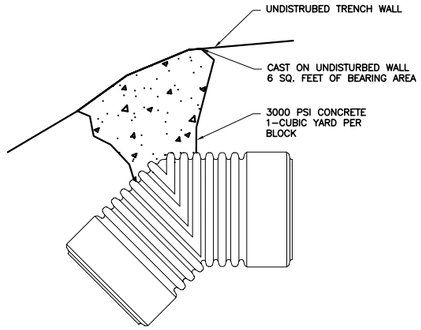

Q TYP TYPICAL THRUST BLOCK
SCALE 1" = 4'-0" STA. 32+55, STA. 38+25, STA. 38+49

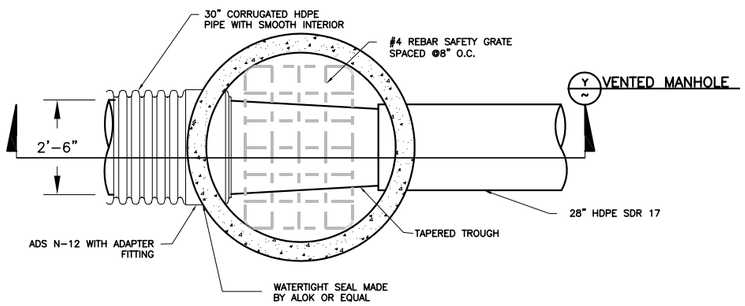

Y VENTED MANHOLE

Z PP7 VENTED MANHOLE PLAN VIEW
SCALE 1" = 4'-0"

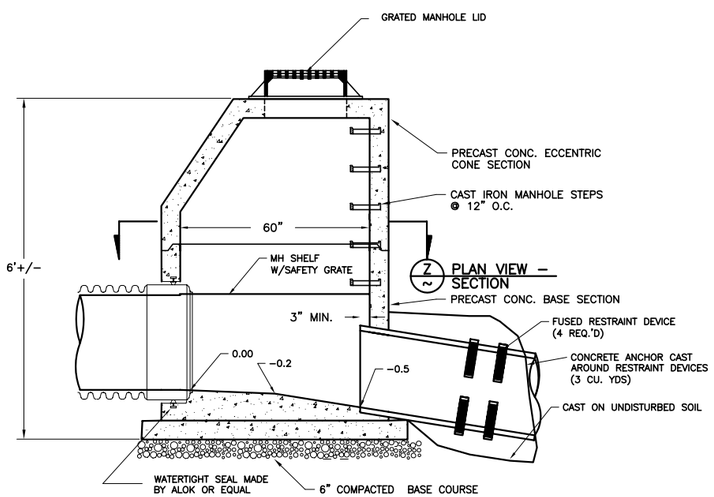

Z PLAN VIEW - SECTION

Y PP7 VENTED MANHOLE
SCALE 1" = 4'-0"

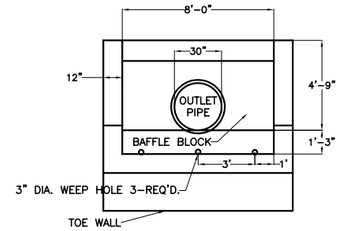

END VIEW

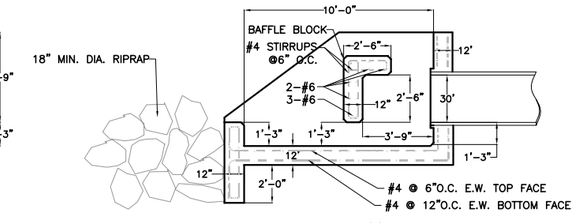

SECTION A'A'

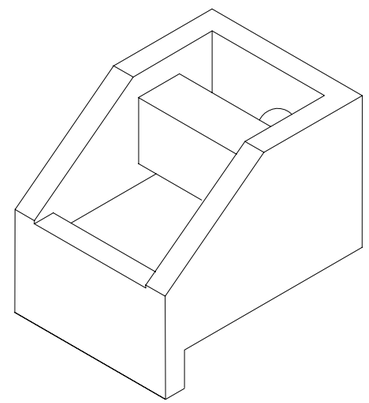

L PERSPECTIVE VIEW

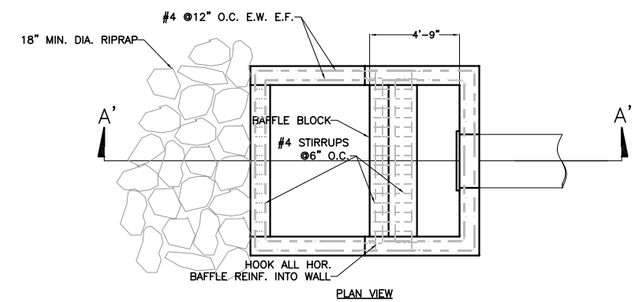

PLAN VIEW

J PP10 STILLING BASIN DETAIL
SCALE 1" = 8'-0"

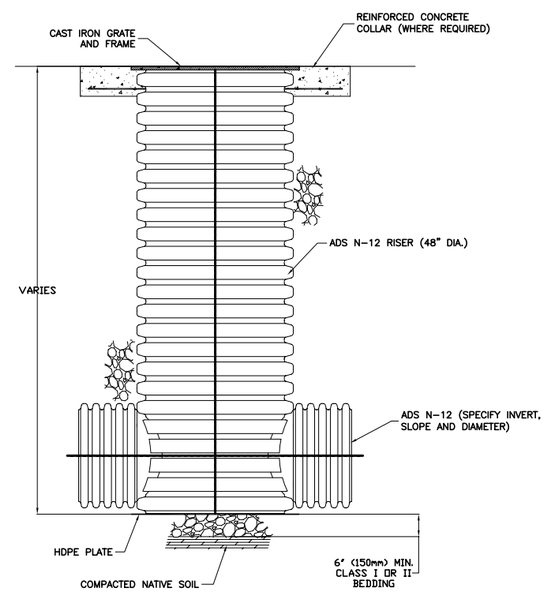

SIDE VIEW

E HDPE N-12 RISER
SCALE 1" = 4'-0"

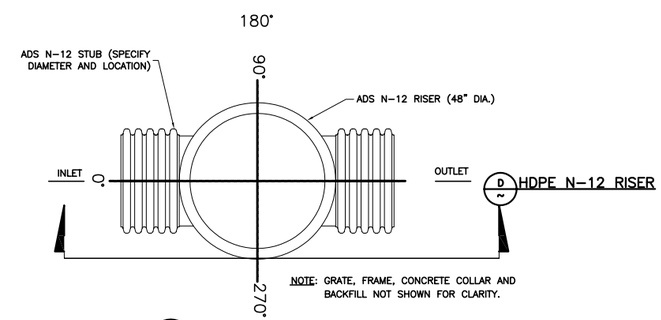

D HDPE N-12 RISER

D PP2 GRATED HDPE N-12 RISER PLAN VIEW
SCALE 1" = 4'-0"

REV NO.	COMMENT	DATE

SUNRISE ENGINEERING
47 EAST 4TH AVENUE / PO BOX 609
AFTON, WYOMING 83110
TEL 307.885.8500 · FAX 307.885.8501
www.sunrise-eng.com

SIMPLOT SMOKY CANYON MINE

POLE CANYON BYPASS
DETAIL OUTFALL STRUCTURE

SEI NO.	DESIGNED	DRAWN	CHECKED	SHEET NO.	
02290	EJS	TLD	FDK	16 of 23	D3

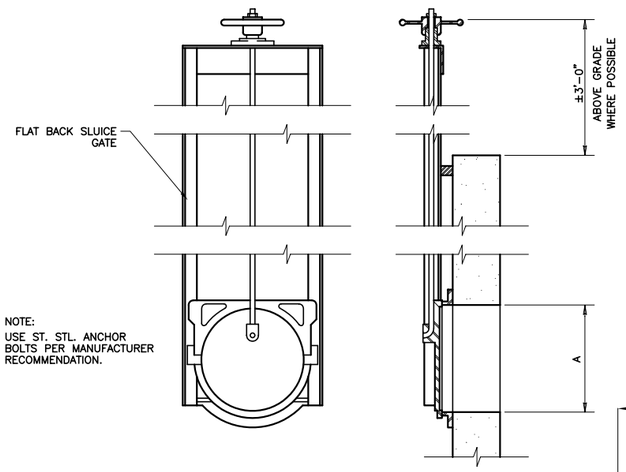

S / D2 SLUICE GATE DETAIL
NOT TO SCALE

SLUICE GATE SCHEDULE

MARK NO.	LOCATION	DWG. REF.	SIZE A(DIA)OR A X B	'WATERMAN' MODEL OR EQUAL	QUANTITY	CLOSURE	PRESSURE		FRAME (1)		OPERATOR (2)
							SEAT	UNSEAT	TYPE	H	
1	POLE CANYON CREEK DIVERSION PIPE INLET	D2	30" ø		1	FLAT	10	0	S.C.	16	MANUAL
2	POLE CANYON CREEK DIVERSION GRAVEL SLUICE	D2	24" ø	CL-10	1	FLAT	10	0	S.C.	16	MANUAL

NOTE:

(1) S.C. MEANS SELF CONTAINED, H IS THE REQUIRED HEIGHT IN FEET BETWEEN THE CENTERLINE OF THE COVER AND THE TOP

(2) MANUAL OPERATOR REQUIRES TYPE 2, BALL BEARING, HANDWHEEL LIFT AND RISING STEM.

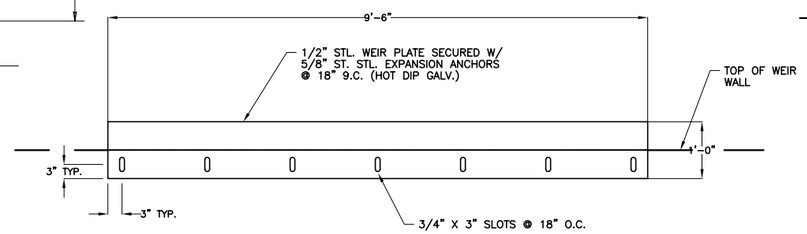

T / S4 WEIR PLATE DETAIL
NOT TO SCALE

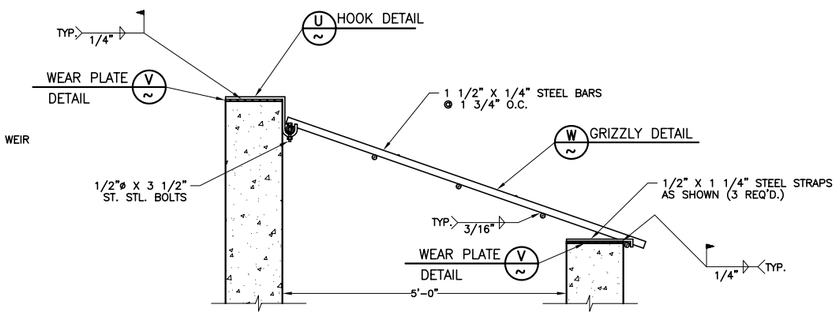

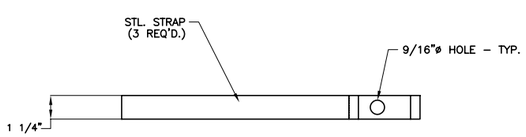

PLAN

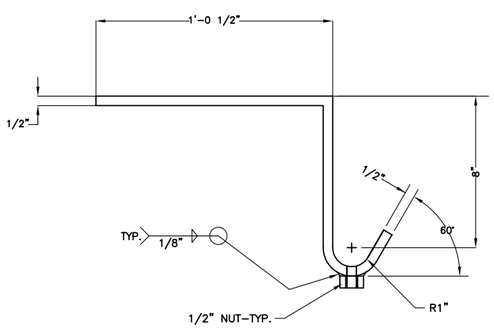

ELEVATION

U / ~ HOOK DETAIL
1"=8"

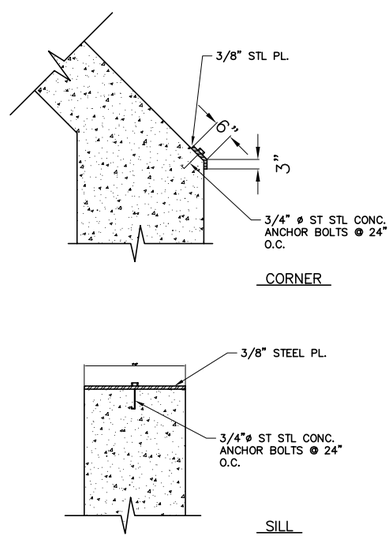

V / ~ WEAR PLATE DETAIL
3"= 1'-0"

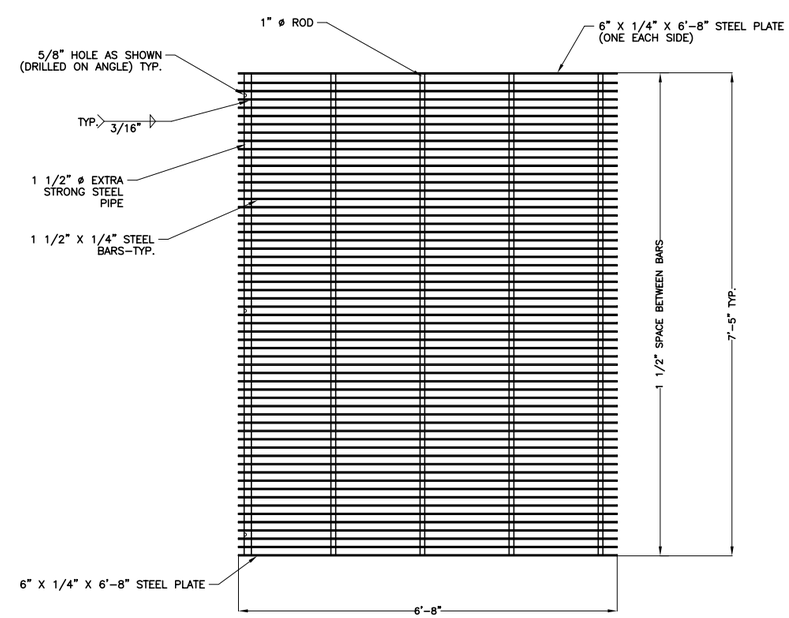

W / D2 GRIZZLY DETAIL
NOT TO SCALE

REV NO.	COMMENT	DATE

SUNRISE ENGINEERING
47 EAST 4TH AVENUE / PO BOX 609
AFTON, WYOMING 83110
TEL 307.885.8500 · FAX 307.885.8501
www.sunrise-eng.com

SIMPLOT SMOKY CANYON MINE

POLE CANYON BYPASS
DIVERSION STRUCTURE DETAILS

SEI NO.	DESIGNED	DRAWN	CHECKED	SHEET NO.	
02290	EJS	TLD	FDK	17 of 23	D4

NOTE: PAINT ALL STEEL SURFACES WITH TWO PART EPOXY; PAINT AFTER ASSEMBLY.

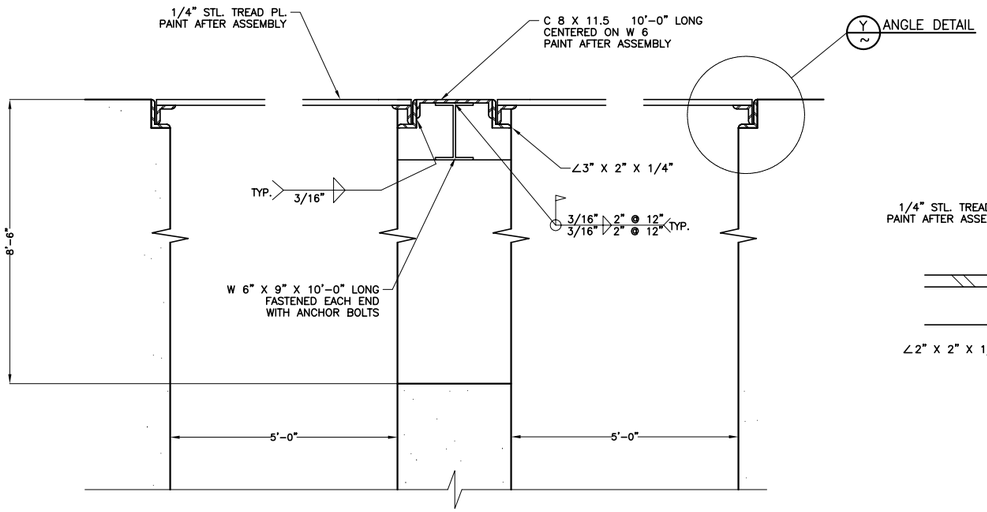

X D2 FLOOR GRATING SUPPORT DETAIL
1 1/2"= 1'-0"

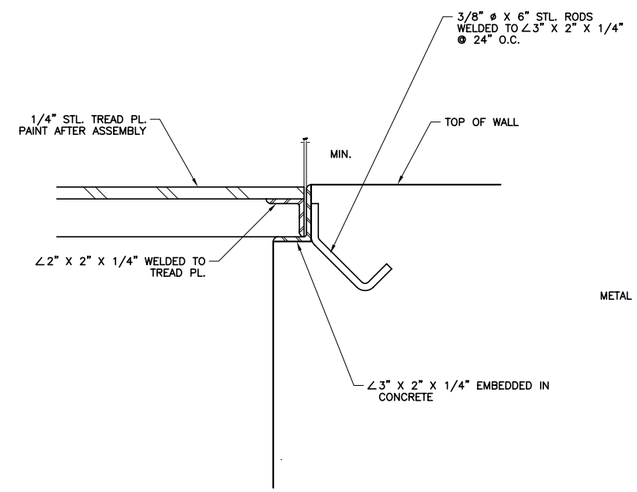

Y TYP ANGLE DETAIL
NO SCALE

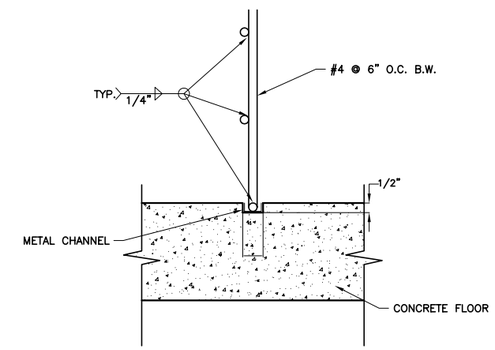

CC S4 GRATE CONNECTION
NOT TO SCALE

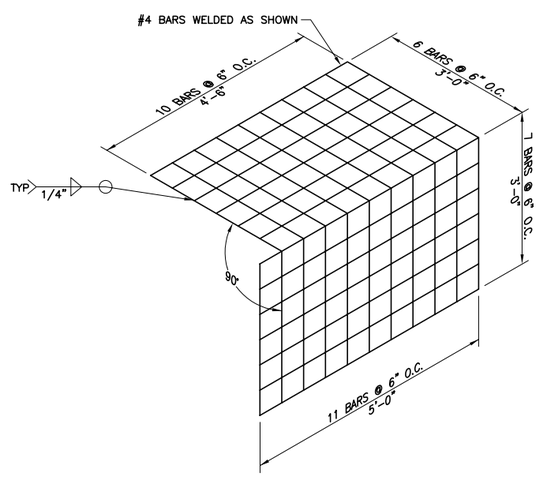

Z S4 SAFETY GRATING
NOT TO SCALE

HANDRAIL NOTES:
1) PLACE CENTER OF HANDRAIL 4" FROM EDGE OF CONCRETE
2) PAINT ALL STEEL SURFACES WITH TWO PART EPOXY PAINT
3) KICKPLATE IS TO BE INSTALLED ON WALKING SIDE OF RAILING.

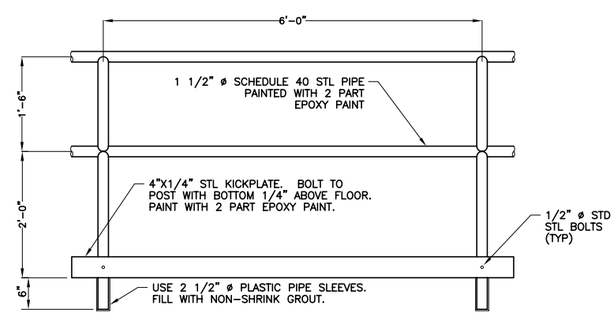

BB TYP HANDRAILING DETAIL
NOT TO SCALE

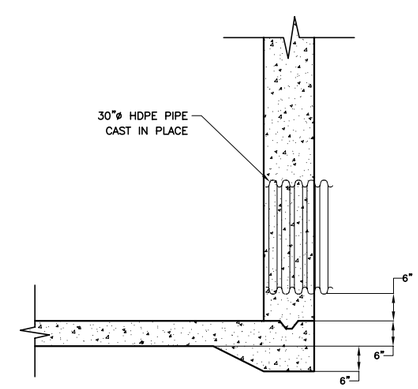

DD D2 OUTLET PIPE DETAIL
NOT TO SCALE

REV NO.	COMMENT	DATE

SUNRISE ENGINEERING
47 EAST 4TH AVENUE / PO BOX 609
AFTON, WYOMING 83110
TEL 307.885.8500 · FAX 307.885.8501
www.sunrise-eng.com

SIMPLOT SMOKY CANYON MINE

POLE CANYON BYPASS
DIVERSION STRUCTURE DETAILS

SEI NO.	DESIGNED	DRAWN	CHECKED	SHEET NO.	
02290	EJS	TLD	FDK	18 of 23	D5

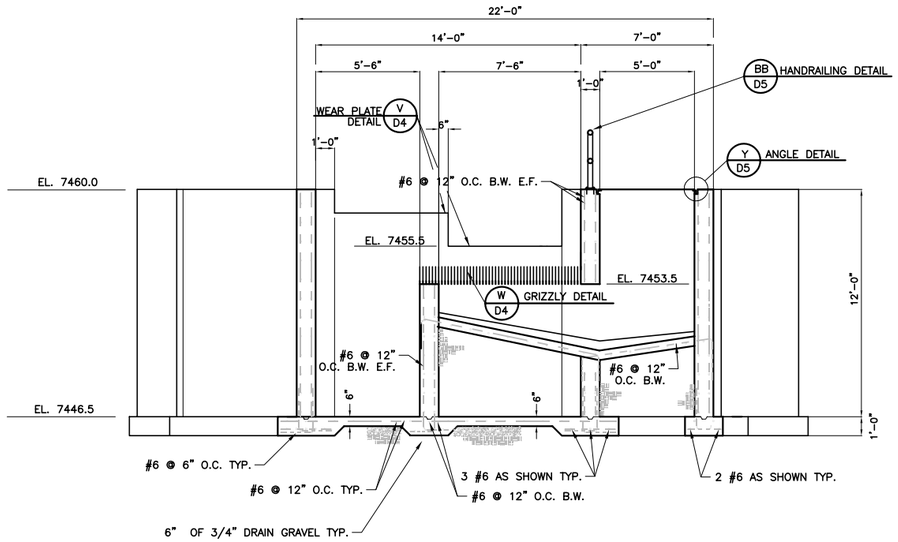

SS D2 SECTION
1"= 8'

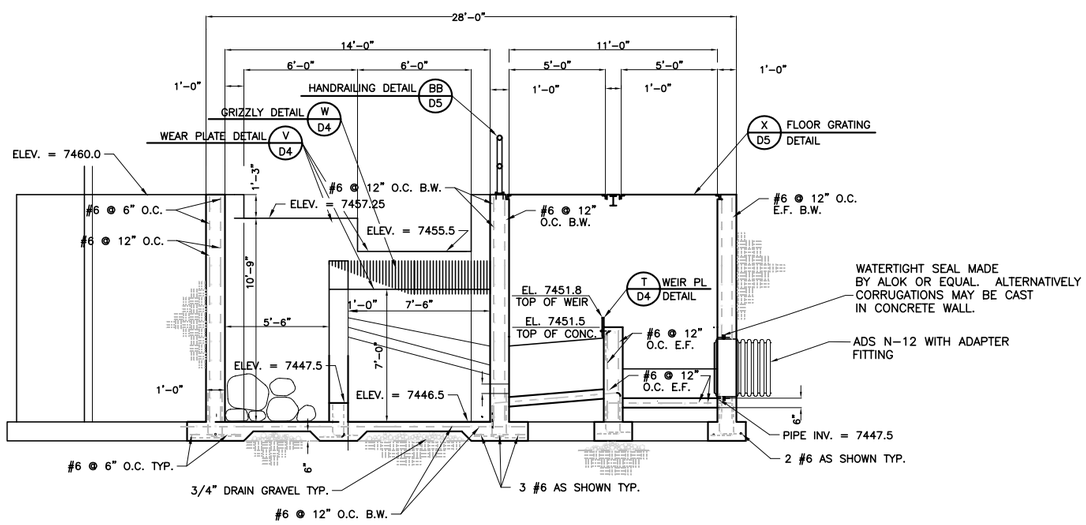

TT D2 SECTION
1"= 8'

REV NO.	COMMENT	DATE

SUNRISE ENGINEERING
47 EAST 4TH AVENUE / PO BOX 609
AFTON, WYOMING 83110
TEL 307.885.8500 · FAX 307.885.8501
www.sunrise-eng.com

SIMPLOT SMOKY CANYON MINE

POLE CANYON BYPASS
DIVERSION STRUCTURE SECTIONS

SEI NO.	DESIGNED	DRAWN	CHECKED	SHEET NO.	
02290	EJS	TLD	FDK	19 of 23	S3

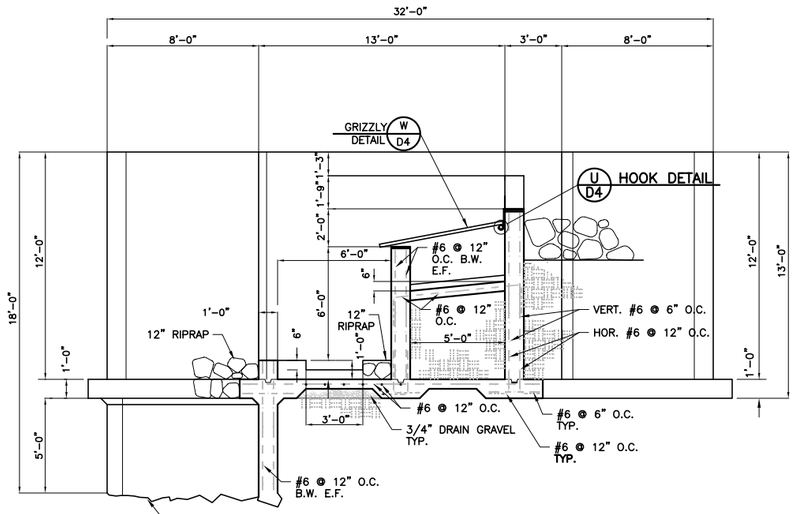

UU D2 SECTION
1"= 8'

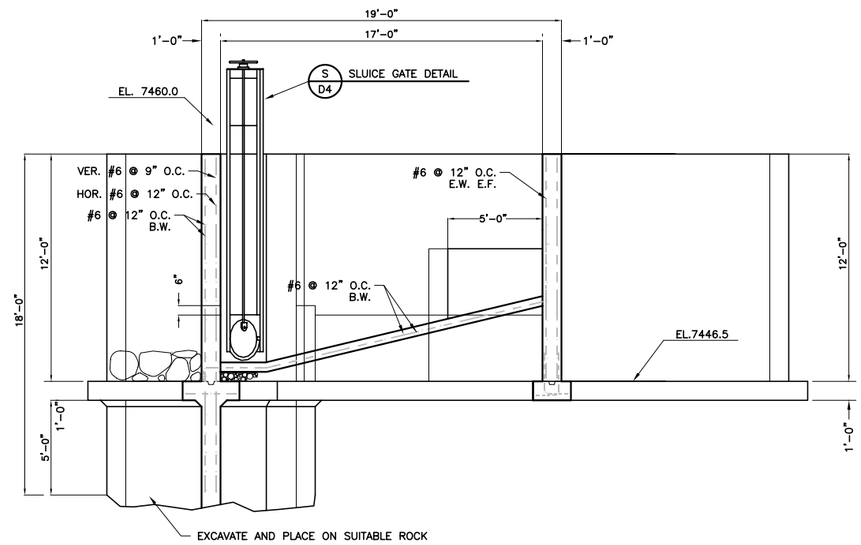

W D2 SECTION
1"= 8'

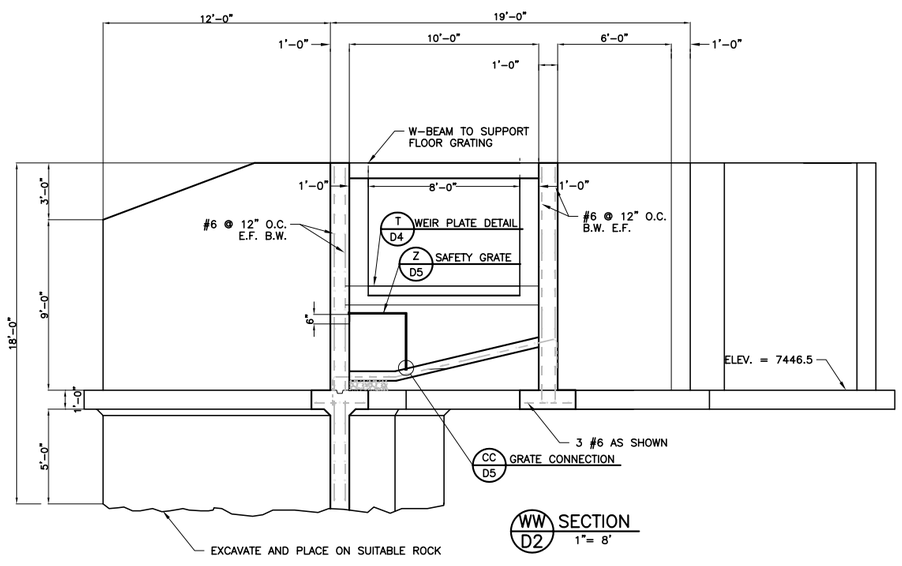

WW D2 SECTION
1"= 8'

REV NO.	COMMENT	DATE

SUNRISE ENGINEERING
47 EAST 4TH AVENUE / PO BOX 609
AFTON, WYOMING 83110
TEL 307.885.8500 · FAX 307.885.8501
www.sunrise-eng.com

SIMPLOT SMOKY CANYON MINE

POLE CANYON BYPASS
DIVERSION STRUCTURE SECTIONS

SEI NO.	DESIGNED	DRAWN	CHECKED	SHEET NO.	
02290	EJS	TLD	FDK	20 of 23	S4

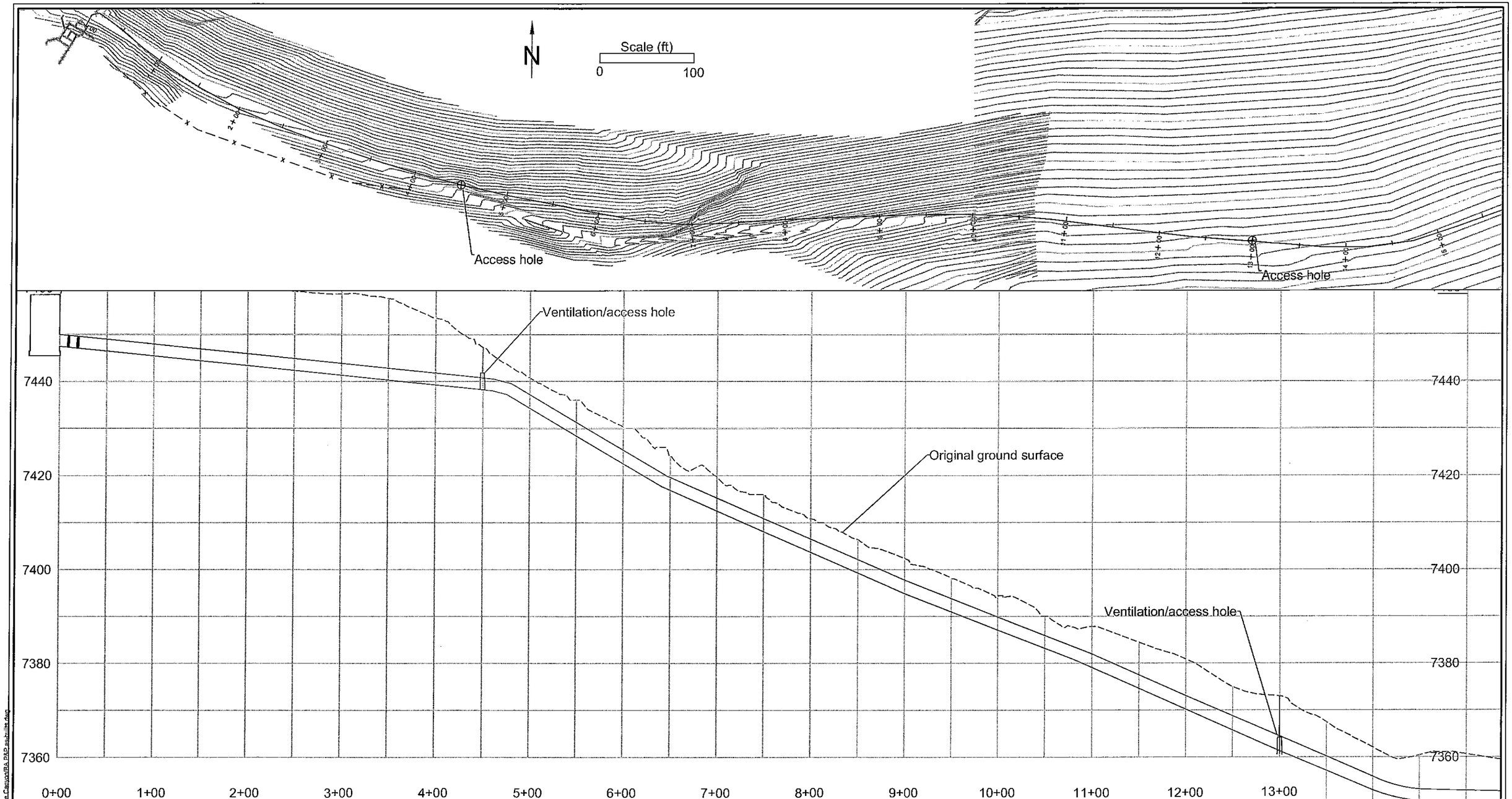

DATE	NO.	ISSUED/REVISED FOR	DRAWN	CHECKED
7/6/07	1	REVISED RDR/RAIWP	BZ	GB
7/11/07	2	REVISED RDR/RAIWP	BZ	GB
7/19/07	3	REVISED RDR/RAIWP ADDENDUM	BZ	GB
11/25/08	4	AS-BUILT	BZ	GB

PROFESSIONAL ENGINEER REGISTERED 12820 11-25-08 STATE OF IDAHO WILLIAM ZIETLOW

BRIERLEY ASSOCIATES
Limited Liability Company
Creating Space Underground
2329 West Main Street, Suite 201,
Littleton, CO
PH 303-703-1405 FAX 303-703-1404
www.brierleyassociates.com

PROJECT
POLE CANYON REPLACEMENT PIPE LINE

PROJECT LOCATION: Pole Canyon, Idaho
DESIGNED FOR: JR Simplot Agribusiness

DESIGNED BY: B. Zietlow
PROJECT NO. 07027-000

SHEET TITLE
PLAN & PROFILE, STA. 0+00 TO 14+00

SHEET 1 OF 6

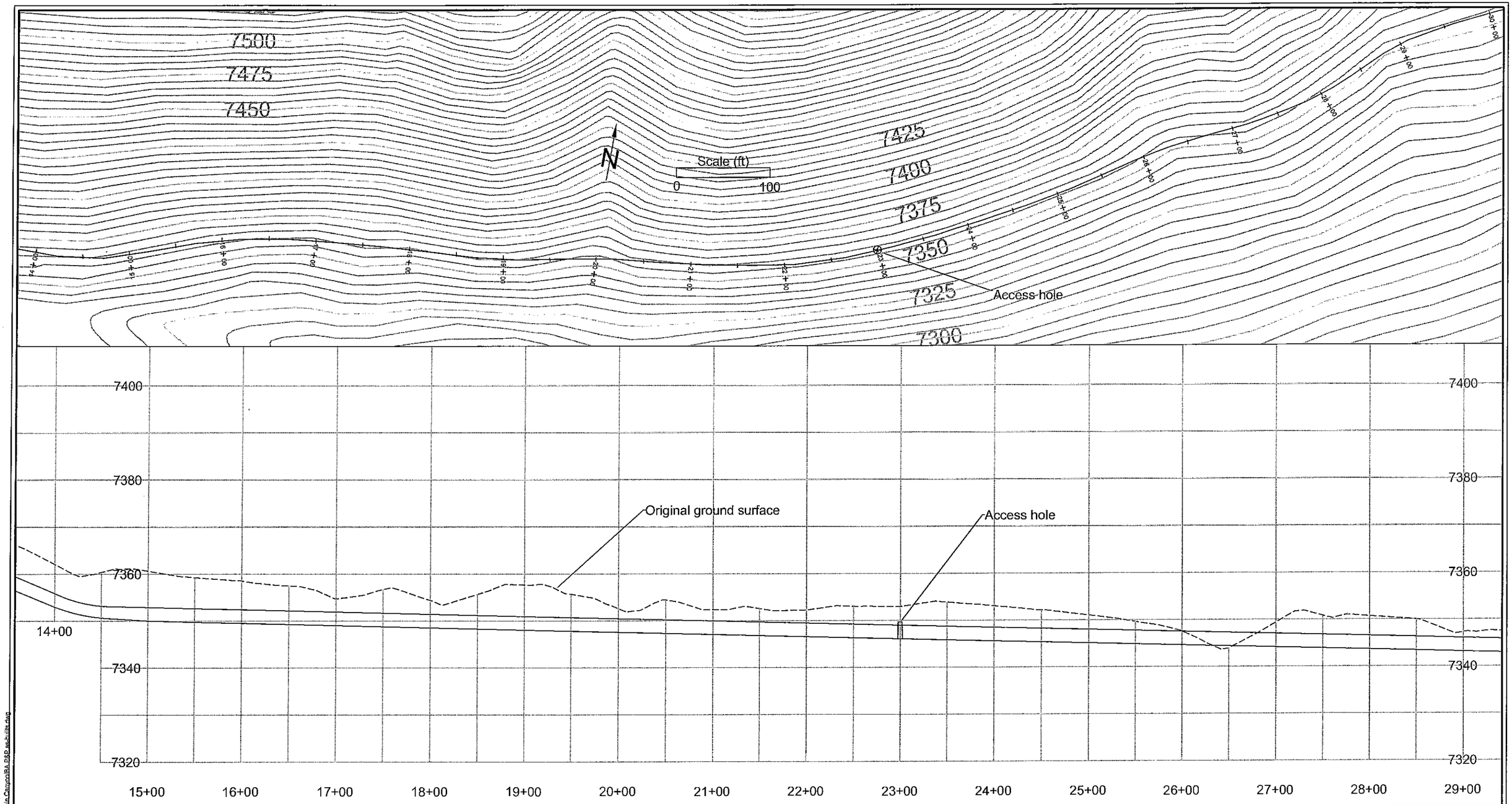

DATE	NO.	ISSUED/REVISED FOR	DRAWN	CHECKED
7/6/07	1	REVISED RDR/RAIWP	BZ	GB
7/11/07	2	REVISED RDR/RAIWP	BZ	GB
7/19/07	3	REVISED RDR/RAIWP ADDENDUM	BZ	GB
11/25/08	4	AS-BUILT	BZ	GB

PROFESSIONAL ENGINEER REGISTERED 12820 11-25-08 STATE OF IDAHO WILLIAM ZIETLOW

BRIERLEY ASSOCIATES
Limited Liability Company
Creating Space Underground
2329 West Main Street, Suite 201,
Littleton, CO
PH 303-703-1405 FAX 303-703-1404
www.brierleyassociates.com

PROJECT
POLE CANYON REPLACEMENT PIPE LINE

PROJECT LOCATION: Pole Canyon, Idaho
DESIGNED FOR: JR Simplot Agribusiness

DESIGNED BY: B. Zietlow
PROJECT NO. 07027-000

SHEET TITLE
PLAN & PROFILE, STA. 14+00 TO 29+00

SHEET **2** OF **6**

M:\Projects\07027 Simplot Pole Canyon\BA P&P sch-lite.dwg

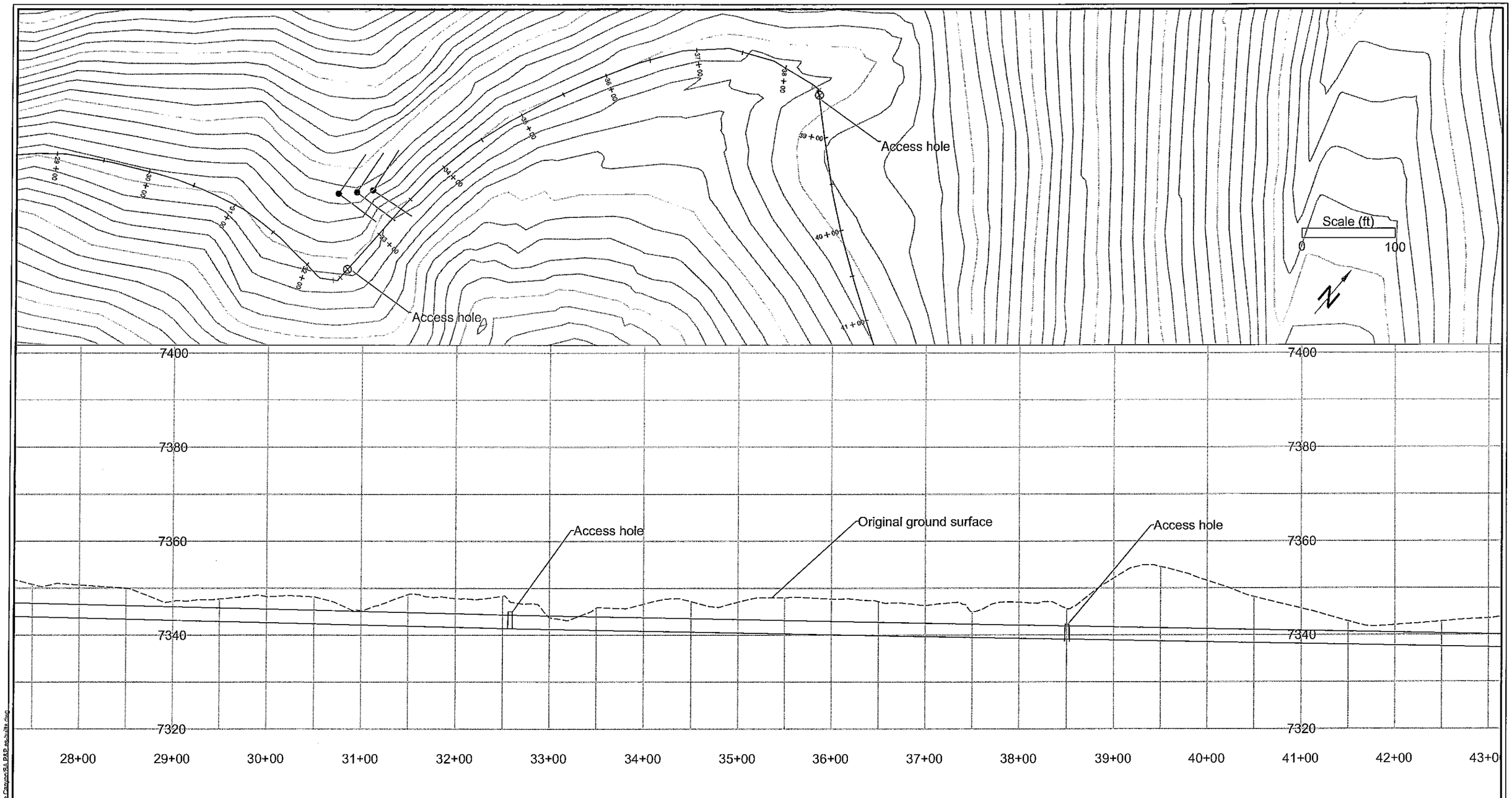

DATE	NO.	ISSUED/REVISED FOR	DRAWN	CHECKED
7/6/07	1	REVISED RDR/RAIWP	BZ	GB
7/11/07	2	REVISED RDR/RAIWP	BZ	GB
7/19/07	3	REVISED RDR/RAIWP ADDENDUM	BZ	GB
11/25/08	4	AS-BUILT	BZ	GB

PROFESSIONAL ENGINEER REGISTERED 12820 11-25-08 STATE OF IDAHO WILLIAM ZIETLOW

BRIERLEY ASSOCIATES
Limited Liability Company
Creating Space Underground
2329 West Main Street, Suite 201,
Littleton, CO
PH 303-703-1405 FAX 303-703-1404
www.brierleyassociates.com

PROJECT
POLE CANYON REPLACEMENT PIPE LINE

PROJECT LOCATION: Pole Canyon, Idaho
DESIGNED FOR: JR Simplot Agribusiness

DESIGNED BY: B. Zietlow
PROJECT NO. 07027-000

SHEET TITLE
PLAN & PROFILE, STA. 29+00 TO 41+00

SHEET **3** OF **6**

M:\Projects\07027 Simplot Pole Canyon\BA P&P as-built.dwg

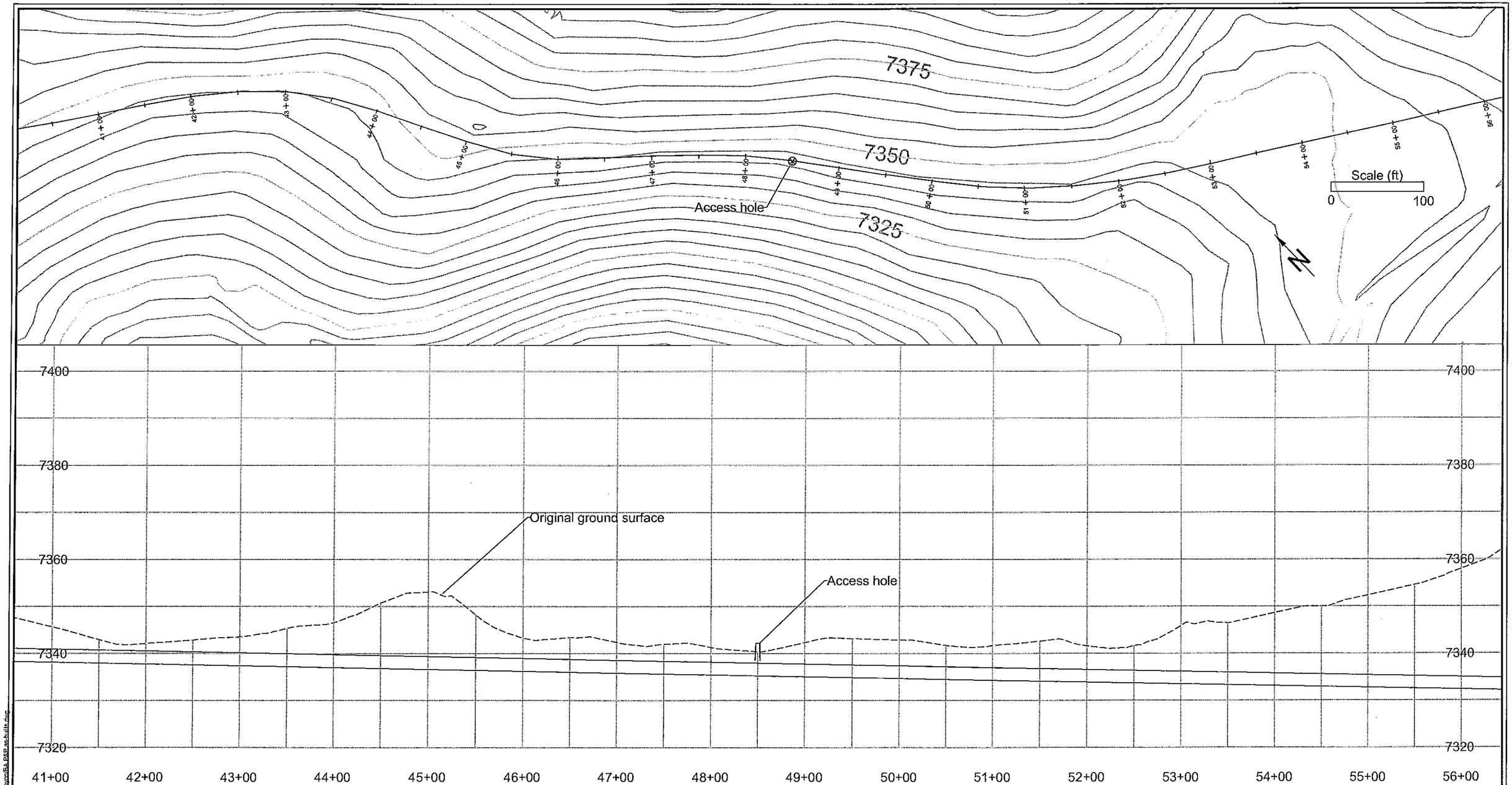

DATE	NO.	ISSUED/REVISED FOR	DRAWN	CHECKED
7/6/07	1	REVISED RDR/RAIWP	BZ	GB
7/11/07	2	REVISED RDR/RAIWP	BZ	GB
7/19/07	3	REVISED RDR/RAIWP ADDENDUM	BZ	GB
11/25/08	4	AS-BUILT	BZ	GB

PROFESSIONAL ENGINEER REGISTERED 12820 11-25-08 STATE OF IDAHO WILLIAM ZIETLOW

BRIERLEY ASSOCIATES
Limited Liability Company
Creating Space Underground
2329 West Main Street, Suite 201,
Littleton, CO
PH 303-703-1405 FAX 303-703-1404
www.brierleyassociates.com

PROJECT
POLE CANYON REPLACEMENT PIPE LINE

PROJECT LOCATION: Pole Canyon, Idaho
DESIGNED FOR: JR Simplot Agribusiness

DESIGNED BY: B. Zietlow
PROJECT NO. 07027-000

SHEET TITLE
PLAN & PROFILE, STA. 41+00 TO 56+00

SHEET **4** OF **6**

M:\Projects\07027 Simplot Pole Canyon\& PRP sch\ills.dwg

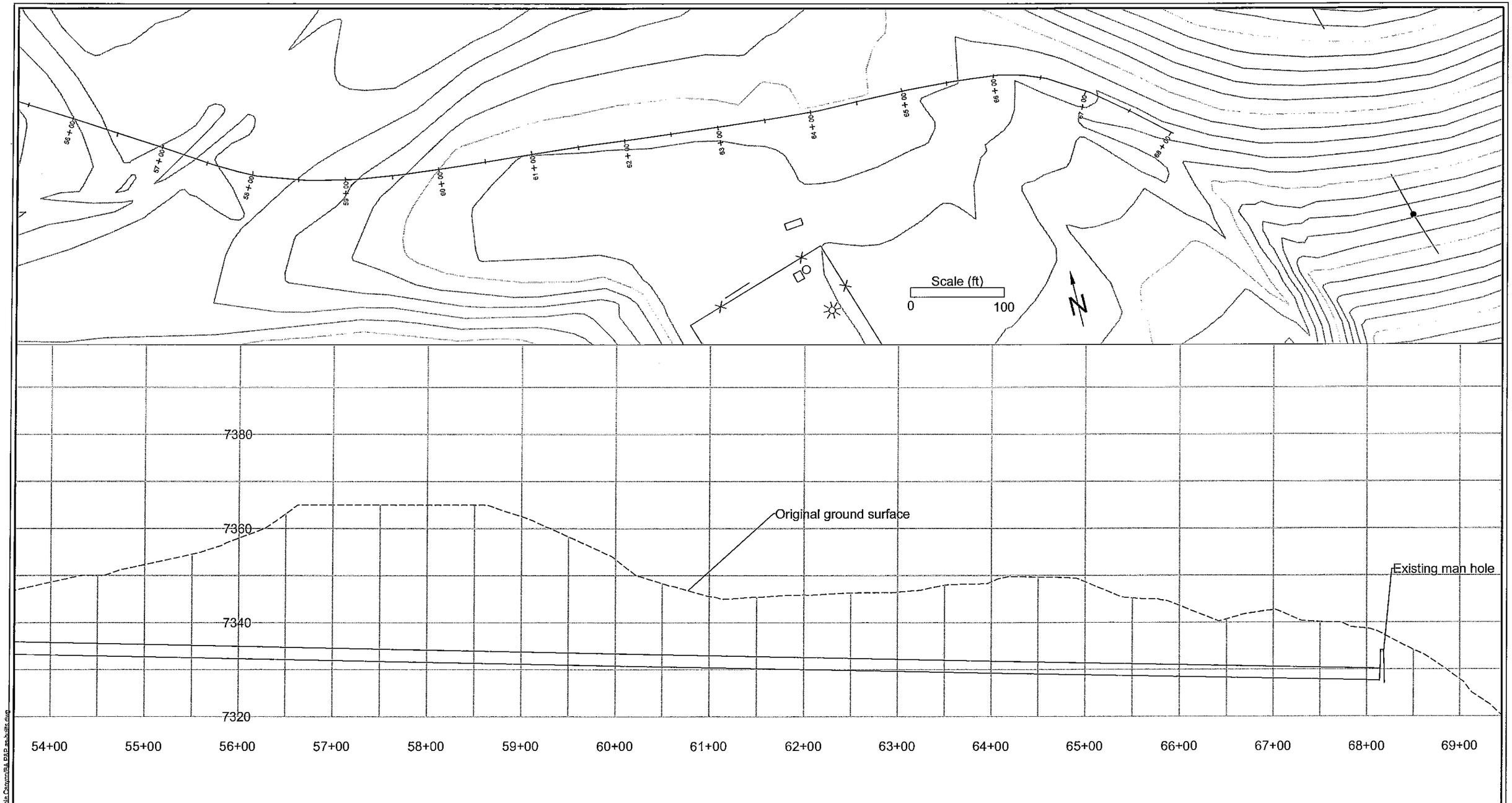

DATE	NO.	ISSUED/REVISED FOR	DRAWN	CHECKED
7/6/07	1	REVISED RDR/RAIWP	BZ	GB
7/11/07	2	REVISED RDR/RAIWP	BZ	GB
7/19/07	3	REVISED RDR/RAIWP ADDENDUM	BZ	GB
11/25/08	4	AS-BUILT	BZ	GB

PROFESSIONAL ENGINEER REGISTERED 12820 11-25-08 STATE OF IDAHO WILLIAM ZIETLOW

BRIERLEY ASSOCIATES
Limited Liability Company
Creating Space Underground
2329 West Main Street, Suite 201,
Littleton, CO
PH 303-703-1405 FAX 303-703-1404
www.brierleyassociates.com

PROJECT
POLE CANYON REPLACEMENT PIPE LINE

PROJECT LOCATION: Pole Canyon, Idaho
DESIGNED FOR: JR Simplot Agribusiness

DESIGNED BY: B. Zietlow
PROJECT NO. 07027-000

SHEET TITLE
PLAN & PROFILE, STA. 56+00 TO68+00

SHEET **5** OF 6

M:\Projects\07027 Simplot Pole Canyon\PA EXP as-built.dwg

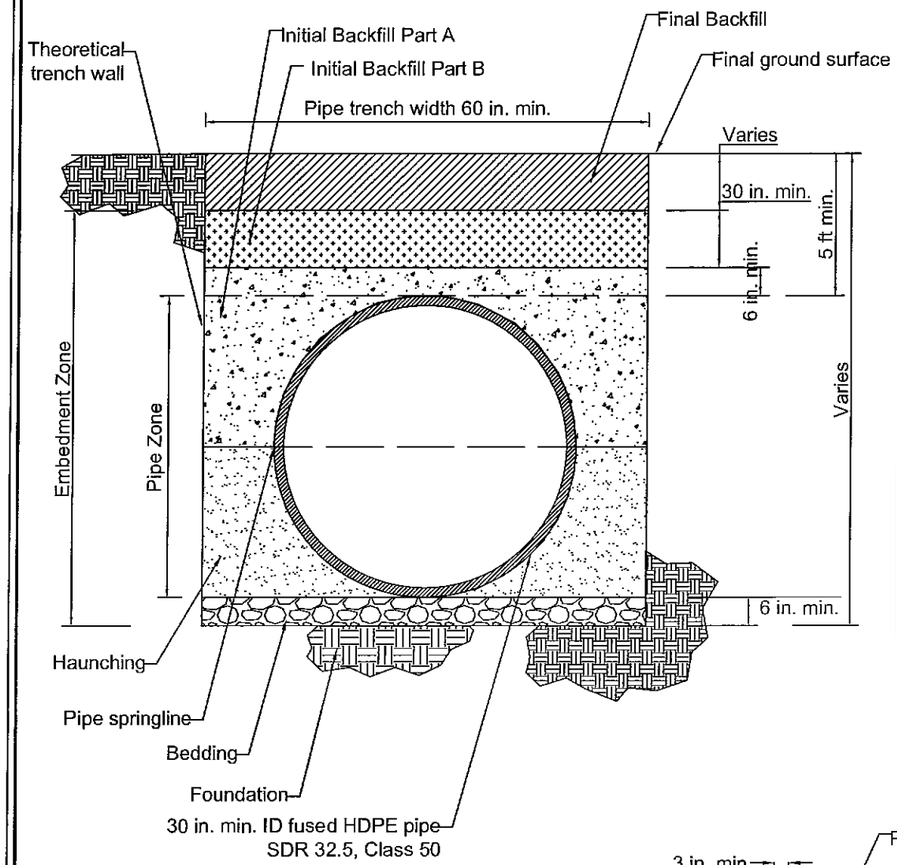

TRENCH DETAIL

(Fig. 1, Specification 02200)

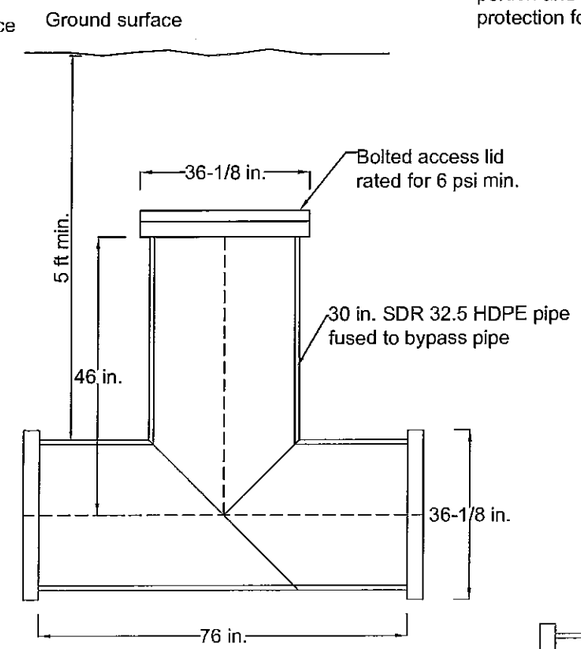

TEE ACCESS HOLE

DETAIL 1

Note: Vent pipes are coated with epoxy paint for the above ground portion and wrapped with plastic tape designed for steel corrosion protection for the underground portion.

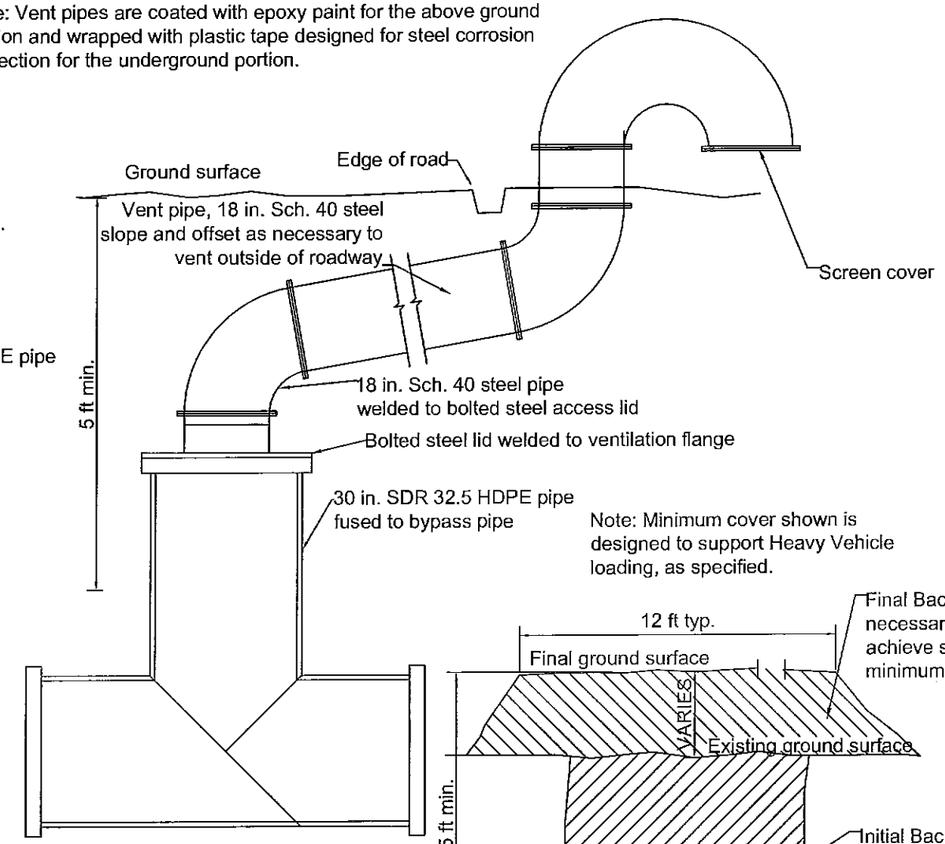

Note: Minimum cover shown is designed to support Heavy Vehicle loading, as specified.

TEE VENTILATION/ACCESS HOLE

DETAIL 2

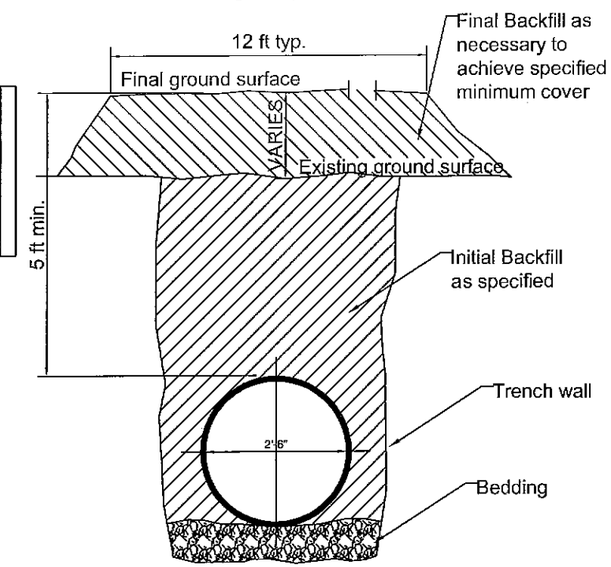

MINIMUM COVER REQUIREMENTS

DETAIL 3

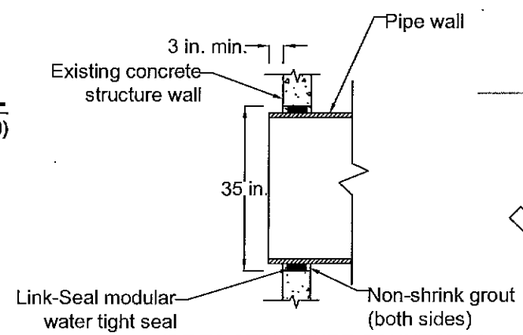

PIPE TO STRUCTURE CONNECTION DETAIL

DETAIL 5

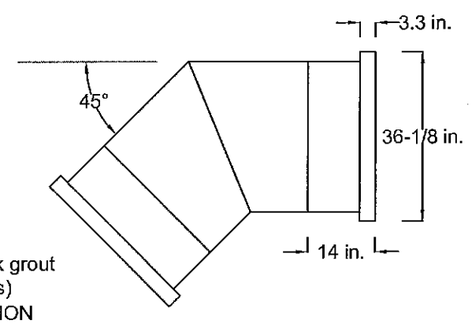

ELBOW CONNECTOR FOR 30 IN. ID HDPE PIPE, CLASS 50

DETAIL 4

DATE	NO.	ISSUED/REVISED FOR	DRAWN	CHECKED
7/6/07	1	REVISED RDR/RAIWP	BZ	GB
7/11/07	2	REVISED RDR/RAIWP	BZ	GB
7/19/07	3	REVISED RDR/RAIWP ADDENDUM	BZ	GB
11/25/08	4	AS-BUILT	BZ	GB

PROFESSIONAL ENGINEER REGISTERED 12820 11-25-08 STATE OF IDAHO WILLIAM ZIETLOW

BRIERLEY ASSOCIATES
Limited Liability Company
Creating Space Underground
2329 West Main Street, Suite 201,
Littleton, CO
PH 303-703-1405 FAX 303-703-1404
www.brierleyassociates.com

PROJECT
POLE CANYON REPLACEMENT PIPE LINE

PROJECT LOCATION: Pole Canyon, Idaho
DESIGNED FOR: JR Simplot Agribusiness

DESIGNED BY: B. Zietlow
PROJECT NO. 07027-000

SHEET TITLE
DETAILS

SHEET **6** OF **6**

M:\Projects\07027 Simplot Pole Canyon\PA PAD\ashbilts.dwg

J.R. SIMPLOT AGRIBUSINESS COMPANY

SMOKY CANYON MINE - IDAHO

POLE CANYON ODA RUN-ON CONTROL CHANNEL

(AS-BUILT, NOVEMBER 2008)

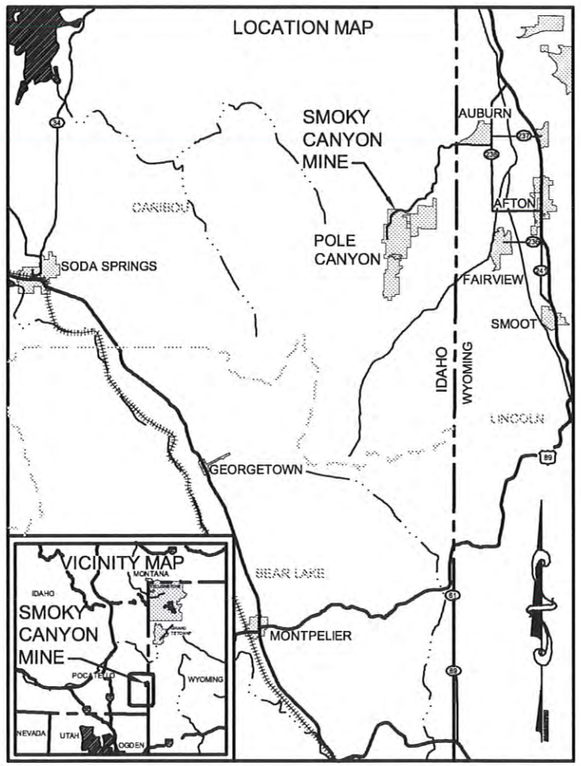

GRAPHIC SCALE

5 0 2.5 5 10 20

(IN MILES)

DRAWING INDEX:

SHEET NO.	SHEET TITLE
1	TITLE SHEET, LOCATION AND VICINITY MAPS, AND DRAWING INDEX
2	PLAN
3	PROFILE
4	TYPICAL CHANNEL SECTIONS
4.1	CHANNEL DETAIL PLANS AND SECTIONS
5	ARTICULATED CONCRETE BLOCK (ARMORFLEX) FOR OUTFALL CHUTE REACH 4
5.1	ARTICULATED CONCRETE BLOCK FOR REACH 4 - DETAILS
6	ENERGY DISSIPATION BASIN AND SEDIMENT CATCHMENT BASIN - PLAN, PROFILE AND SECTIONS

PROFESSIONAL ENGINEER
REGISTERED
6984
28 Nov. '08
STATE OF IDAHO
JOHN H. RAHE

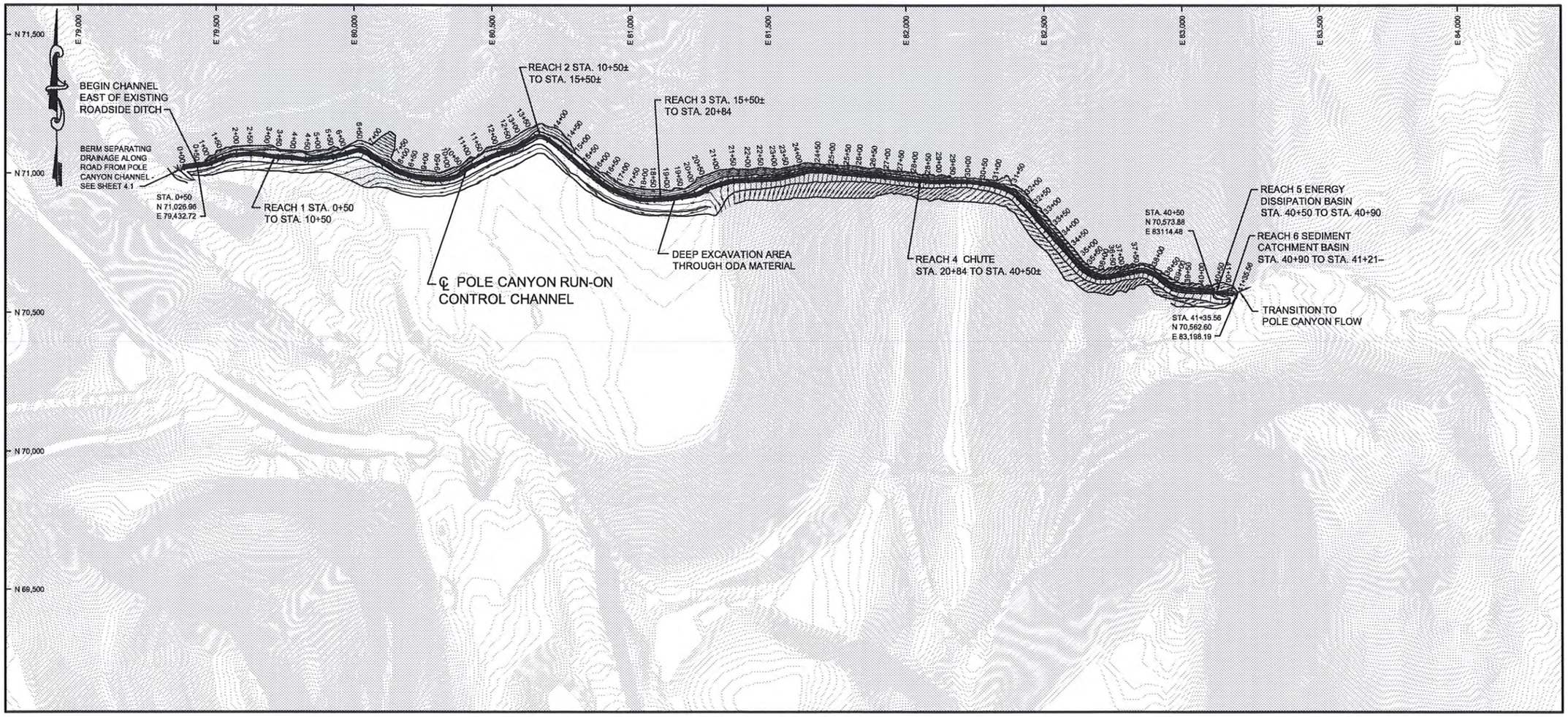

PLAN

GRAPHIC SCALE

200 0 100 200 400 800

(IN FEET)

NOTES:

1. FINAL AS-BUILT CHANNEL ALIGNMENT TOPOGRAPHY BY SIMPLOT, NOVEMBER 2008.
2. DRAWING COORDINATES ARE BASED ON LOCAL MINE COORDINATE SYSTEM.

PROFESSIONAL ENGINEER REGISTERED 6984 28 Nov '08 STATE OF IDAHO JOHN H. RAHE

REFERENCES	DATE	NO.	ISSUE/REVISED FOR	DRAWN	CHECKED	DATE	NO.	ISSUE/REVISED FOR	DRAWN	CHECKED
						11/08	2	AS-BUILT	EGD	JHR
						08/15/08	1	ISSUE FOR CONSTRUCTION	EGD	JHR
						07/21/08	0	ISSUE FOR REVIEW	EGD	JHR

RAHE ENGINEERING, INC.
1070 YOUNGFIELD STREET
GOLDEN, CO 80401
PHONE: 303-238-1690
FAX: 303-233-4683

J.R. SIMPLOT AGRIBUSINESS COMPANY

SMOKY CANYON MINE - IDAHO

PROJECT: POLE CANYON ODA RUN-ON CONTROL CHANNEL

SHEET TITLE: PLAN

SHEET 2

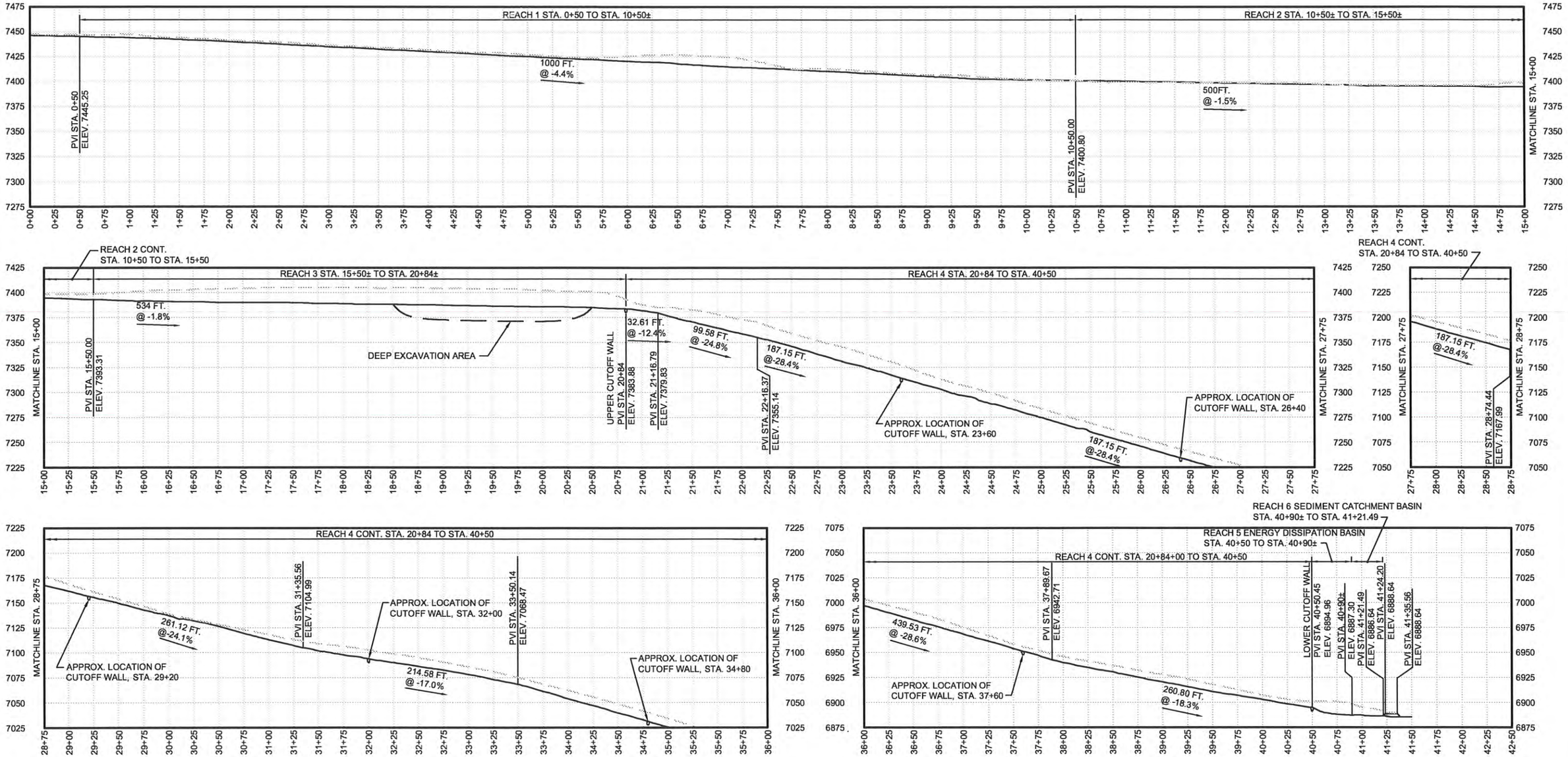

NOTE:

1. AS-BUILT LENGTHS AND ELEVATIONS ARE BASED ON GROUND SURVEY BY SIMPLOT NOVEMBER 2008.

PROFILE

GRAPHIC SCALE

50 0 25 50 100 200

(IN FEET)

PROFESSIONAL ENGINEER REGISTERED 6984 STATE OF IDAHO JOHN H. RAHE 29 Nov. 08

REFERENCES	DATE	NO.	ISSUE/REVISED FOR	DRAWN	CHECKED	DATE	NO.	ISSUE/REVISED FOR	DRAWN	CHECKED
						11/08	2	AS-BUILT	EGD	JHR
						08/15/08	1	ISSUE FOR CONSTRUCTION	EGD	JHR
						07/21/08	0	ISSUE FOR REVIEW	EGD	JHR

RAHE ENGINEERING, INC.
1070 YOUNGFIELD STREET
GOLDEN, CO 80401
PHONE: 303-238-1690
FAX: 303-233-4683

J.R. SIMPLOT AGRIBUSINESS COMPANY

SMOKY CANYON MINE - IDAHO

PROJECT: POLE CANYON ODA RUN-ON CONTROL CHANNEL

SHEET TITLE: PROFILE

SHEET: 3

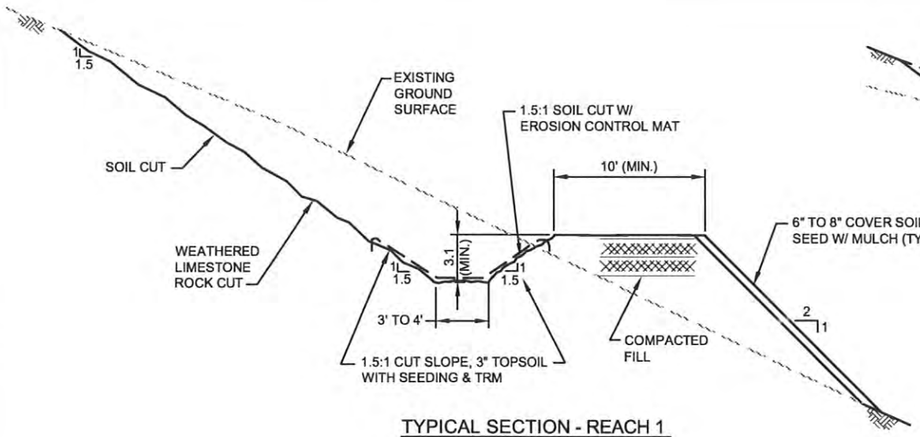

TYPICAL SECTION - REACH 1

STA. 1+00 TO STA. 10+50±

GRAPHIC SCALE

5 0 2.5 5 10 20

(IN FEET)

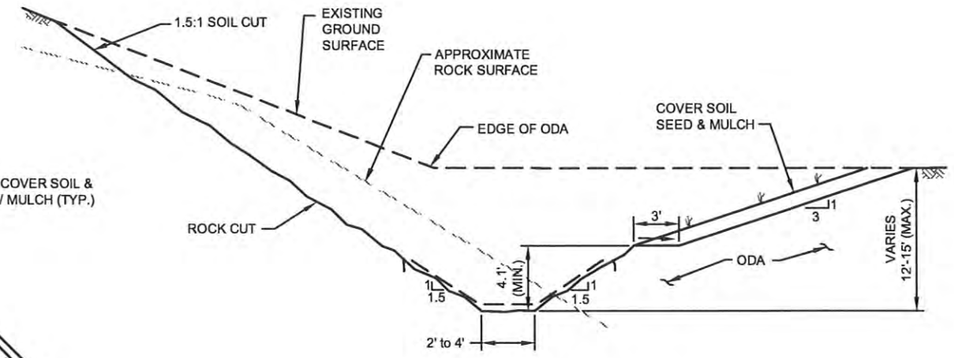

TYPICAL SECTION - REACH 3

STA. 15+50± TO STA. 22+00±

GRAPHIC SCALE

5 0 2.5 5 10 20

(IN FEET)

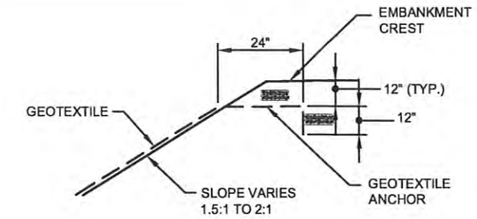

TYPICAL GEOTEXTILE ANCHOR

NTS

GRAPHIC SCALE

5 0 2.5 5 10 20

(IN FEET)

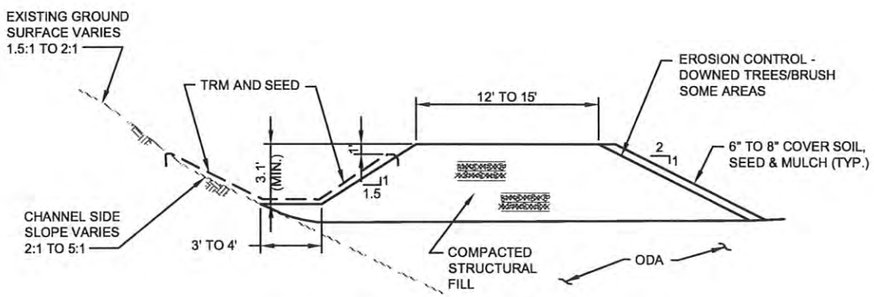

TYPICAL SECTION - REACH 2

STA. 10+50± TO STA. 15+50±

GRAPHIC SCALE

0 2.5 5 10 20

(IN FEET)

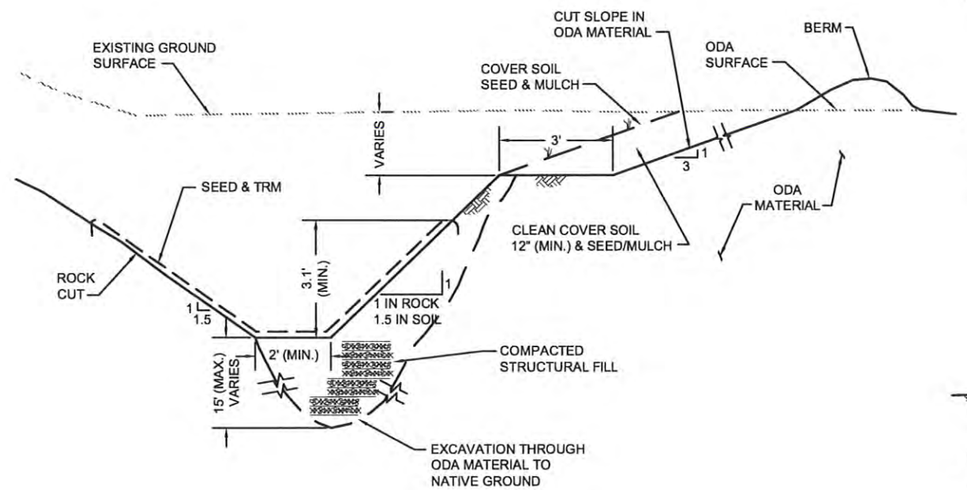

DEEP CUT SECTION

LOOKING DOWNSTREAM

STA. 18+50 TO STA. 20+00±

GRAPHIC SCALE

2 0 1 2 4 8

(IN FEET)

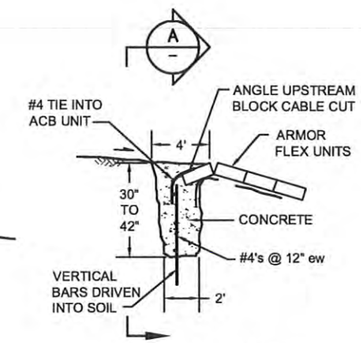

TYPICAL SECTION

UPPER CUTOFF WALL

NOT TO SCALE

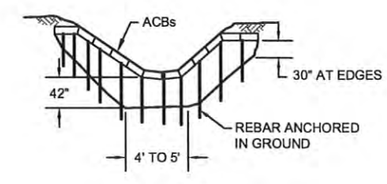

SECTION A UPPER

CUTOFF WALL

NOT TO SCALE

NOTES:

1. SECTIONS LOOKING DOWNSTREAM.
2. ALL CHANNEL REACH 1-3 SECTIONS HAVE 1.5:1 SIDE SLOPES, 3" (MIN.) GROWTH MEDIUM SOIL, SEEDING AND TRM PLACED.
3. THE STEEP CHUTE OUTFALL PORTION OF CHANNEL REACH 4 CONSISTS OF AMORFLEX ARTICULATED CONCRETE BLOCKS AS SHOWN ON SHEET 5.

REFERENCES	DATE	NO.	ISSUE/REVISED FOR	DRAWN	CHECKED	DATE	NO.	ISSUE/REVISED FOR	DRAWN	CHECKED
						11/08	2	AS-BUILT	EGD	JHR
						08/15/08	1	ISSUE FOR CONSTRUCTION	EGD	JHR
						07/21/08	0	ISSUE FOR REVIEW	EGD	JHR

PROFESSIONAL ENGINEER REGISTERED 6984 STATE OF IDAHO JOHN H. RAHE 28 Nov. '08

RAHE ENGINEERING, INC.
1070 YOUNGFIELD STREET
GOLDEN, CO 80401
PHONE: 303-238-1690
FAX: 303-233-4683

J.R. SIMPLOT AGRIBUSINESS COMPANY

SMOKY CANYON MINE - IDAHO

PROJECT: POLE CANYON ODA RUN-ON CONTROL CHANNEL

SHEET TITLE: TYPICAL CHANNEL SECTIONS

SHEET 4

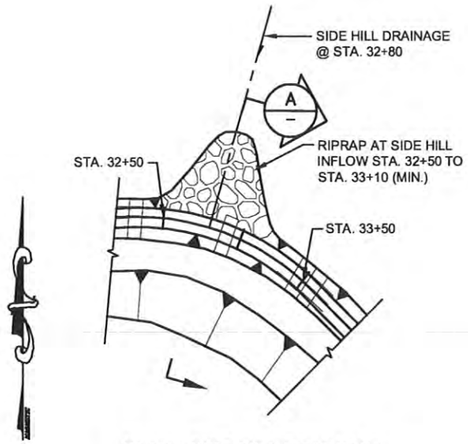

PLAN - SIDE HILL DRAINAGE
AT STA. 32+80
NOT TO SCALE

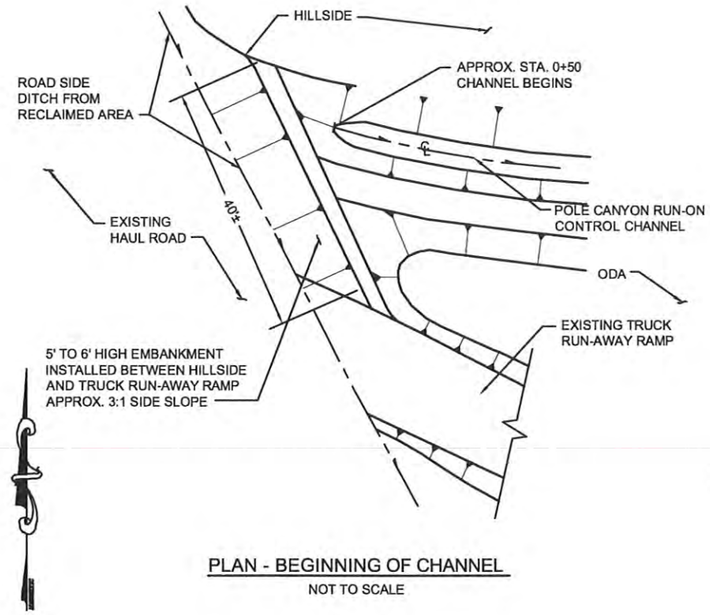

PLAN - BEGINNING OF CHANNEL
NOT TO SCALE

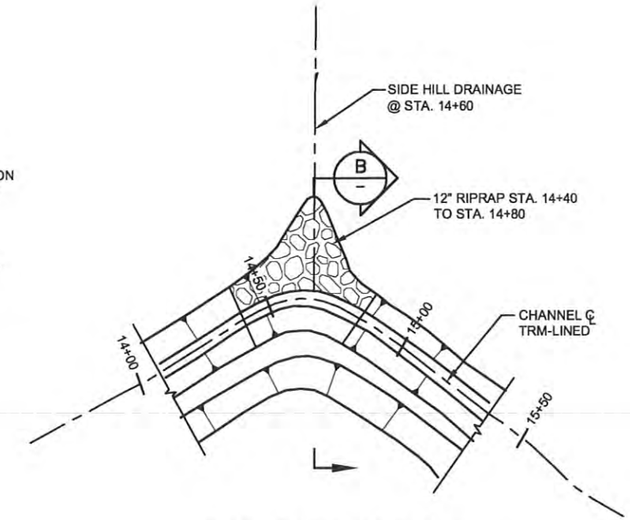

PLAN - SIDE HILL DRAINAGE
AT STA. 14+60
NOT TO SCALE

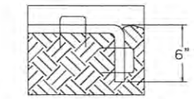

EROSION CONTROL ANCHOR DETAIL
SIDE ANCHOR
NOT TO SCALE

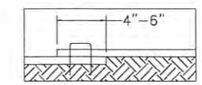

EROSION CONTROL ANCHOR DETAIL
TYPICAL OVERLAP
NOT TO SCALE

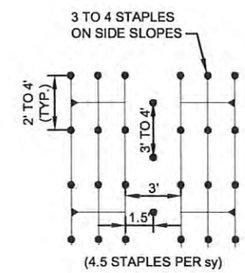

EROSION CONTROL ANCHOR DETAIL
STAPLE PATTERN
NOT TO SCALE

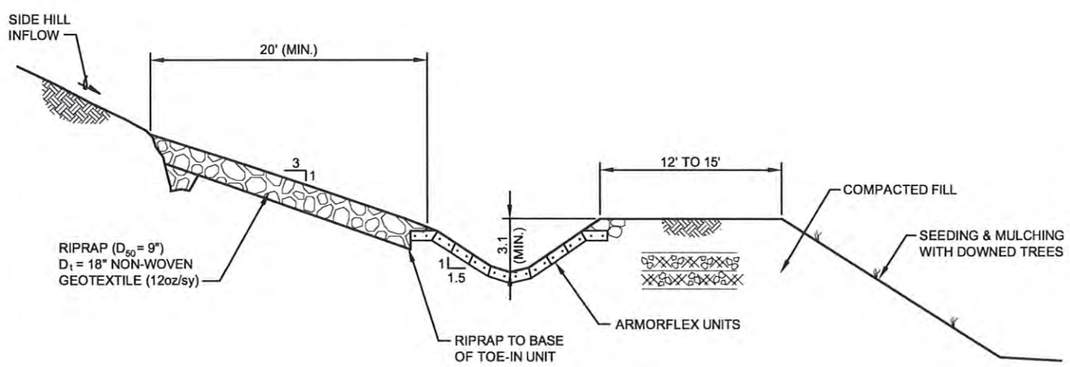

SECTION A
LOOKING DOWNSTREAM
NOT TO SCALE

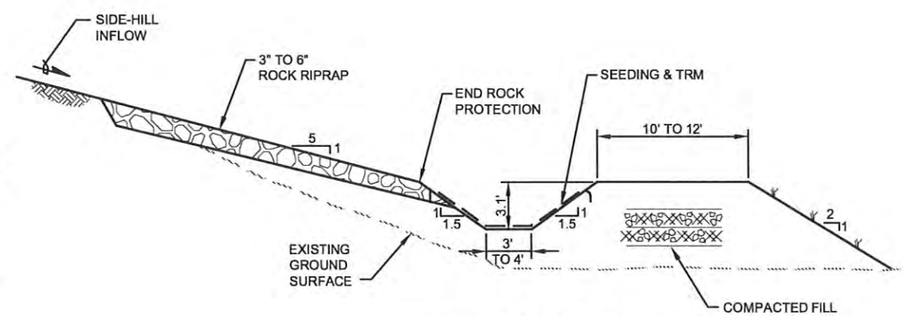

SECTION B STA. 14+60
LOOKING DOWNSTREAM
NOT TO SCALE

PROFESSIONAL ENGINEER
REGISTERED
John H. Rahe
6984
28 Nov. '08
STATE OF IDAHO
JOHN H. RAHE

NOTE:
1. SECTIONS LOOKING DOWNSTREAM.

REFERENCES	DATE	NO.	ISSUE/REVISED FOR	DRAWN	CHECKED	DATE	NO.	ISSUE/REVISED FOR	DRAWN	CHECKED
						11/08	2	AS-BUILT	EGD	JHR

RAHE ENGINEERING, INC.
1070 YOUNGFIELD STREET
GOLDEN, CO 80401
PHONE: 303-238-1690
FAX: 303-233-4683

J.R. SIMPLOT AGRIBUSINESS COMPANY

SMOKY CANYON MINE - IDAHO

PROJECT: POLE CANYON ODA RUN-ON CONTROL CHANNEL

SHEET TITLE: CHANNEL DETAIL PLANS AND SECTIONS

SHEET: 4.1

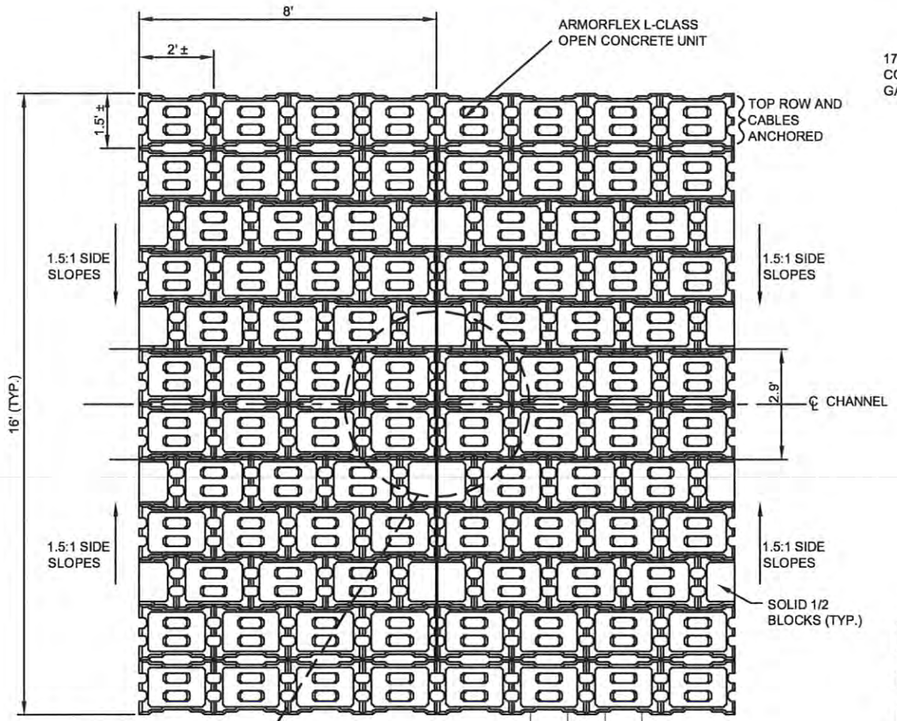

TYPICAL STRIAGHT MAT
PLAN VIEW
NOT TO SCALE

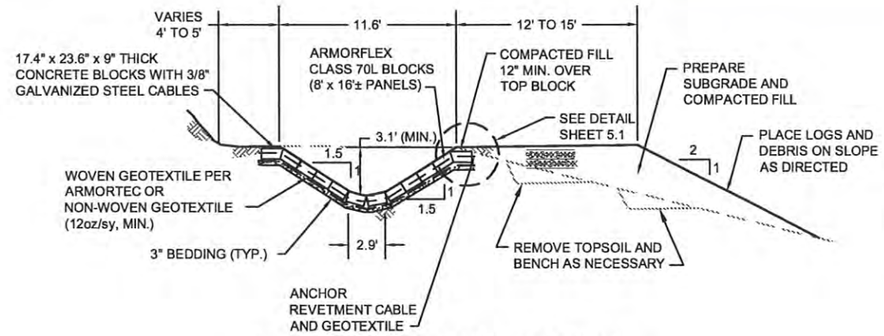

TYPICAL SECTION - ARMORFLEX LINING
LOOKING DOWNSTREAM
STA. 21+90 TO STA. 41+50

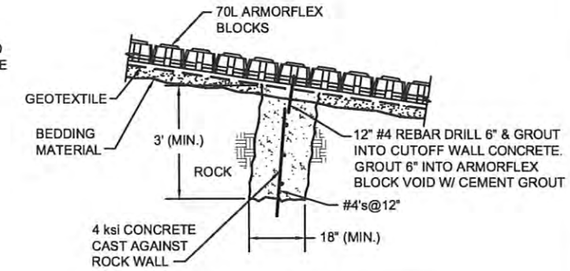

INTERMEDIATE CUTOFF DETAIL
NOT TO SCALE

GRAPHIC SCALE
5 0 2.5 5 10 20
(IN FEET)

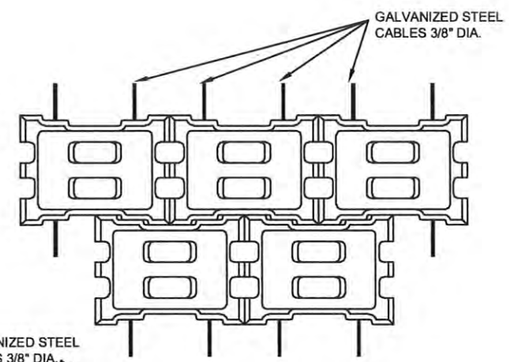

PLAN VIEW

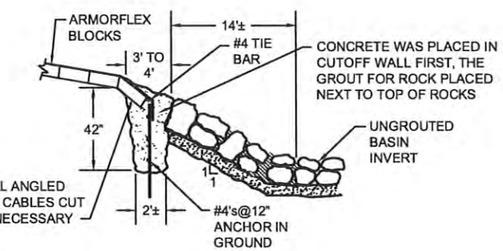

CONCRETE CUTOFF WALL SECTION AT
OUTFALL TO DISSIPATION BASIN

GRAPHIC SCALE
5 0 2.5 5 10 20
(IN FEET)

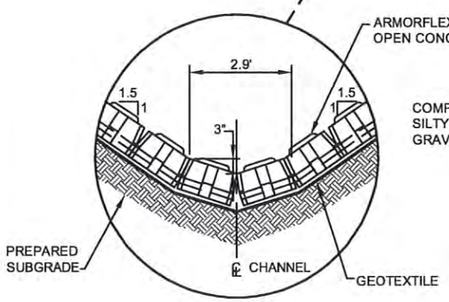

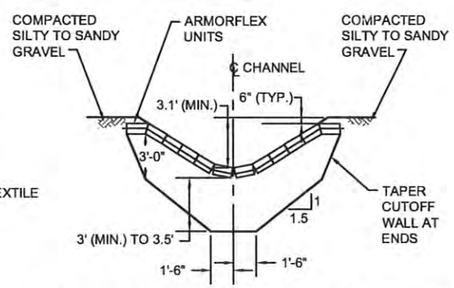

TYPICAL SECTION - LONGITUDINAL CUTOFF WALL

GRAPHIC SCALE
5 0 2.5 5 10 20
(IN FEET)

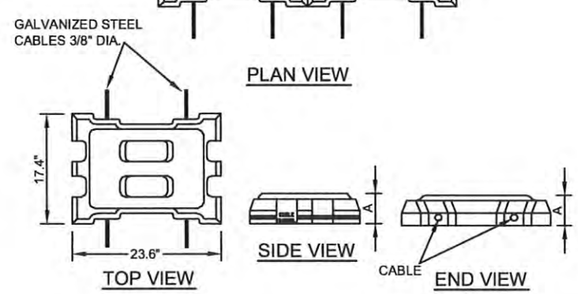

TOP VIEW
SIDE VIEW
END VIEW

UNIT THICKNESS "A"	
CLASS L-70	9.00"

NOTES:

1. SUBGRADE WAS PREPARED FOR ARMORFLEX IN ACCORDANCE WITH SPECIFICATIONS AND 12 oz/sy NON-WOVEN GEOTEXTILE WAS PLACED WITH ADEQUATE ANCHORS AND SEAMS; CONTINUOUS GPS SURVEY CHECKS OF CHANNEL GRADE AND CROSS SECTIONS WERE PERFORMED DURING INSTALLATION.
2. ARMORFLEX PANELS AND ANCHORS WERE INSTALLED IN ACCORDANCE WITH STANDARD ARMORTEC SPECIFICATIONS FOR CHANNELS WITH AN ALLOWABLE VARIABLE PROJECTION OF 0.5 .INCH.
3. AN ARMORTEC/CONTECH REPRESENTATIVE WAS PRESENT DURING INITIAL INSTALLATION OF ARMORFLEX PANELS AND CHANNEL SUBGRADE AND INSTALLATION WERE APPROVED BY THE ARMORTEC/CONTECH REPRESENTATIVE.
4. 3/8-INCH DIAMETER GALVANIZED STEEL CABLES HAVING A MINIMUM TENSILE STRENGTH OF 13,000 lbs. WERE USED IN THE INSTALLATION.
5. INSTALLATION OF ARMORFLEX PANELS WAS IN CONFORMANCE WITH ARMORTEC DRAWINGS P1 TO P2 AND D1 (DATED 12 SEPT. '08).

REFERENCES	DATE	NO.	ISSUE/REVISED FOR	DRAWN	CHECKED	DATE	NO.	ISSUE/REVISED FOR	DRAWN	CHECKED
INSTALLATION OF ARMORFLEX PANELS SHALL BE IN CONFORMANCE										
WITH ARMORTEC DRAWINGS P1 TO P2 AND D1.										
						11/08	2	AS-BUILT	EGD	JHR
						08/15/08	1	ISSUE FOR CONSTRUCTION	EGD	JHR
						07/21/08	0	ISSUE FOR REVIEW	EGD	JHR

PROFESSIONAL ENGINEER
REGISTERED
John H. Rahe
6984
28 Nov. '08
STATE OF IDAHO
JOHN H. RAHE

RAHE ENGINEERING, INC.
1070 YOUNGFIELD STREET
GOLDEN, CO 80401
PHONE: 303-238-1690
FAX: 303-233-4683

J.R. SIMPLOT AGRIBUSINESS COMPANY

SMOKY CANYON MINE - IDAHO

PROJECT: POLE CANYON ODA RUN-ON CONTROL CHANNEL

SHEET TITLE: ARTICULATED CONCRETE BLOCK (ARMORFLEX) ALTERNATIVE FOR OUTFALL CHUTE, REACH 4

SHEET 5

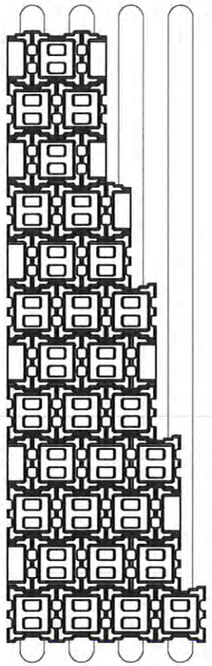

SPECIAL ANGLE MAT 3 FOR CURVES
NOT TO SCALE

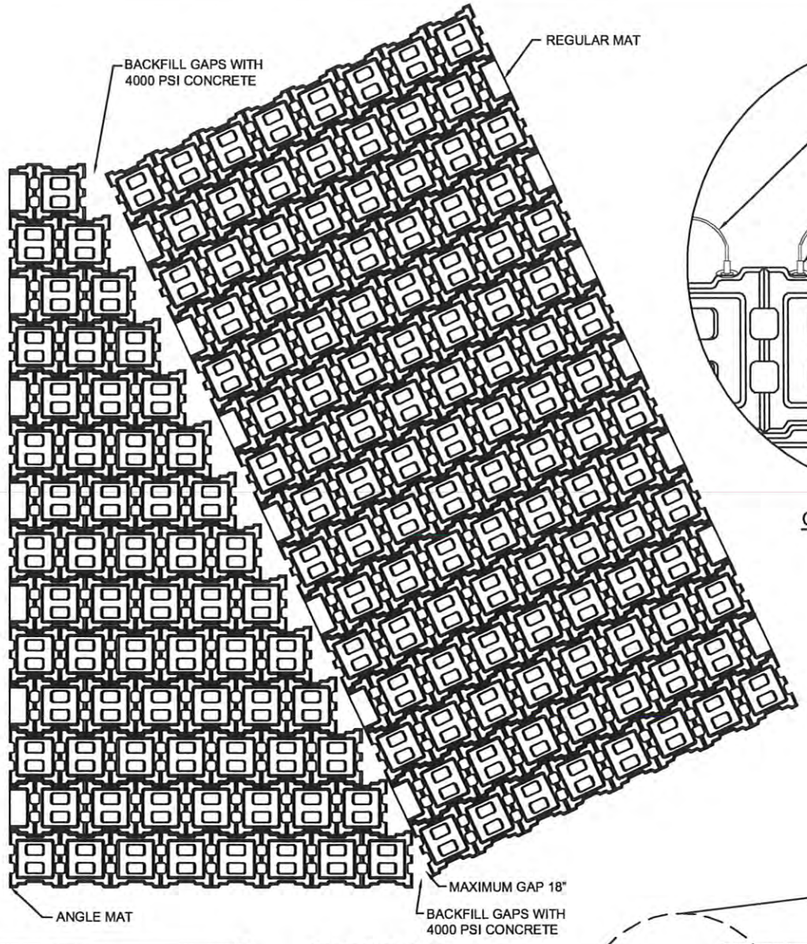

GROUT SEAM
NOT TO SCALE

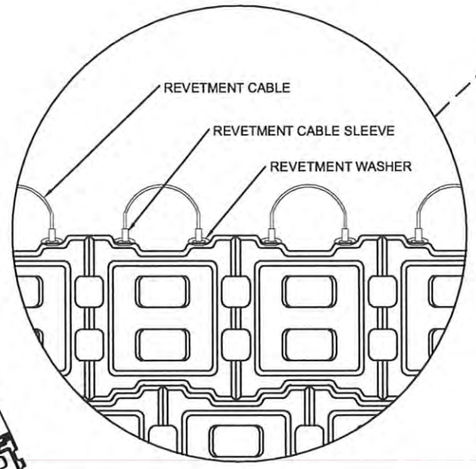

CABLE CLAMP DETAIL
NOT TO SCALE

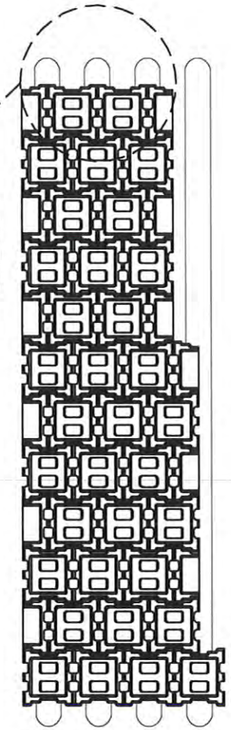

SPECIAL ANGLE MAT 1 FOR CURVES
NOT TO SCALE

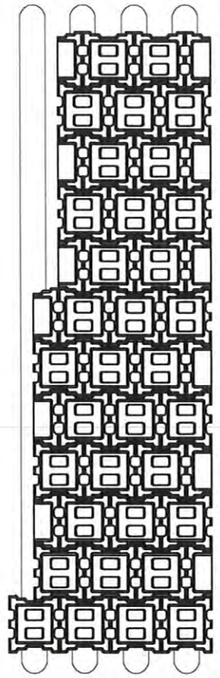

SPECIAL ANGLE MAT 2 FOR CURVES
NOT TO SCALE

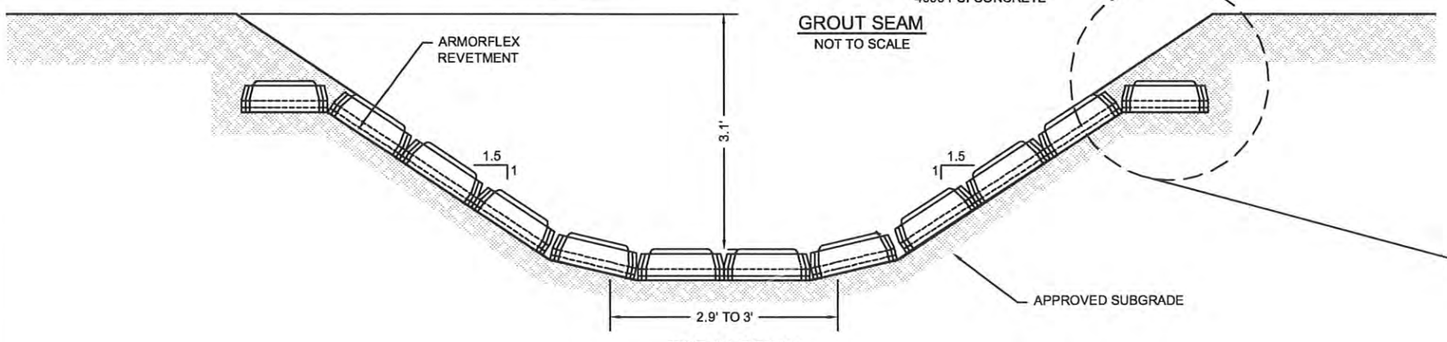

TOE-IN-DETAIL
NOT TO SCALE

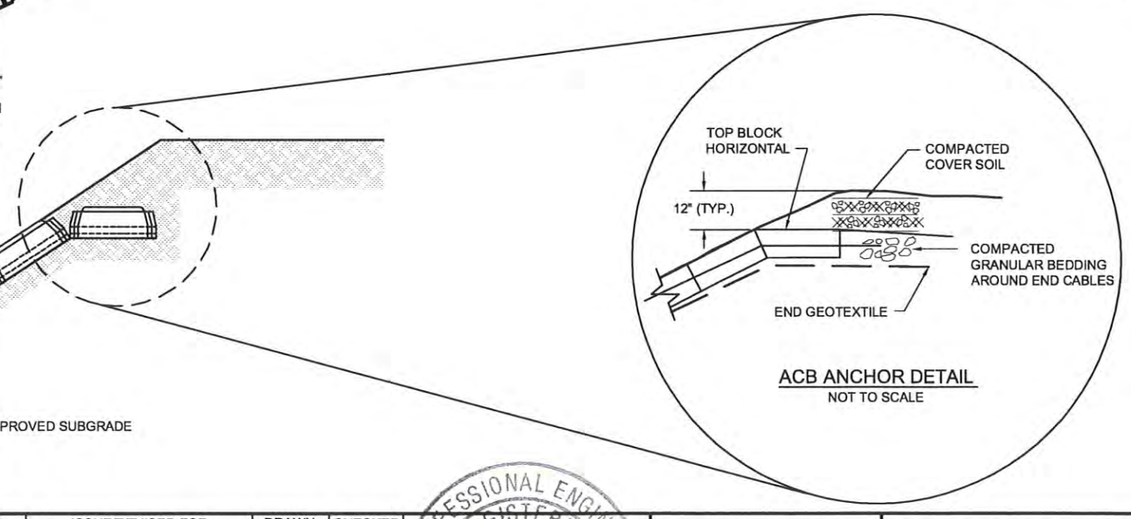

ACB ANCHOR DETAIL
NOT TO SCALE

REFERENCES	DATE	NO.	ISSUE/REVISED FOR	DRAWN	CHECKED	DATE	NO.	ISSUE/REVISED FOR	DRAWN	CHECKED
INSTALLATION OF ARMORFLEX PANELS SHALL BE IN CONFORMANCE										
WITH ARMORTEC DRAWINGS P1 TO P2 AND D1.										
						11/08	0	AS-BUILT	EGD	JHR

PROFESSIONAL ENGINEER
REGISTERED
John H. Rahe
6984
28 Nov. '08
STATE OF IDAHO
JOHN H. RAHE

RAHE ENGINEERING, INC.
1070 YOUNGFIELD STREET
GOLDEN, CO 80401
PHONE: 303-238-1690
FAX: 303-233-4683

J.R. SIMPLOT AGRIBUSINESS COMPANY

SMOKY CANYON MINE - IDAHO

PROJECT: POLE CANYON ODA RUN-ON CONTROL CHANNEL

SHEET TITLE: ARTICULATED CONCRETE BLOCK FOR REACH 4 - DETAILS

SHEET 5.1

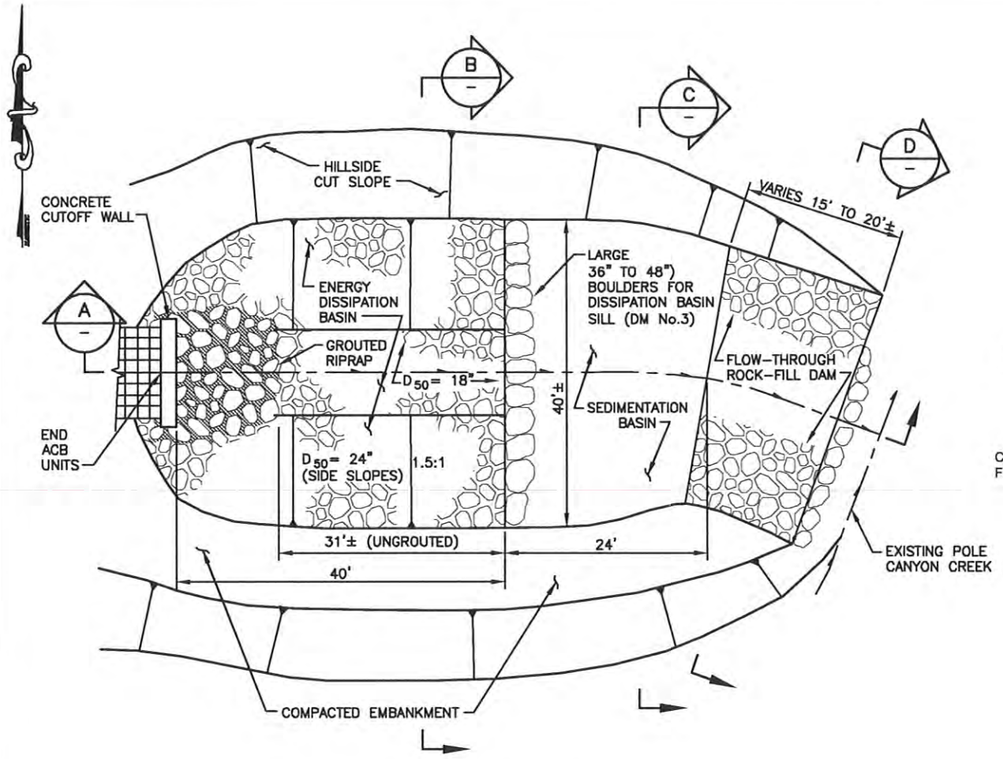

PLAN
ENERGY DISSIPATION/SEDIMENTATION BASIN
GRAPHIC SCALE
10 0 5 10 20 40
(IN FEET)

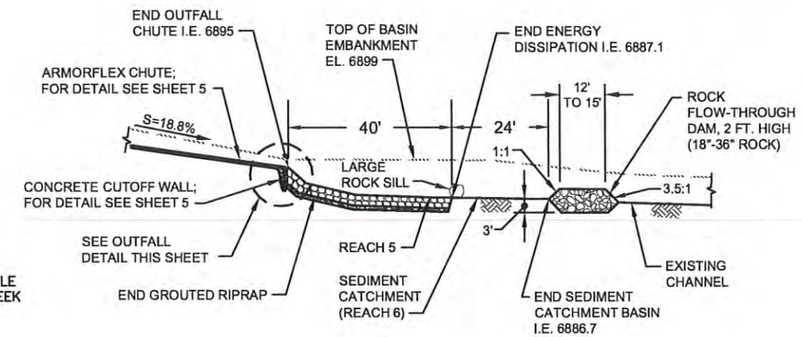

PROFILE A ENERGY DISSIPATION AND SEDIMENT CATCHMENT BASINS
GRAPHIC SCALE
20 0 10 20 40 80
(IN FEET)

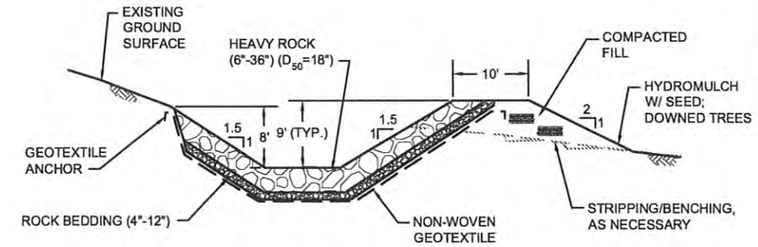

SECTION B DISSIPATION BASIN
(LOOKING DOWNSTREAM)
GRAPHIC SCALE
10 0 5 10 20 40
(IN FEET)

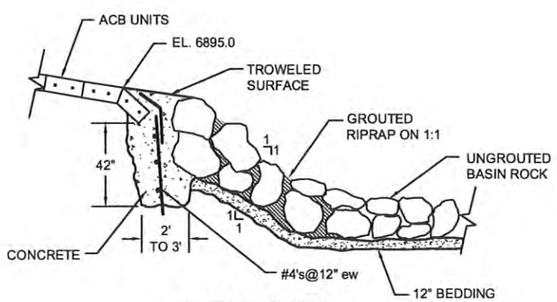

OUTFALL DETAIL
NOT TO SCALE

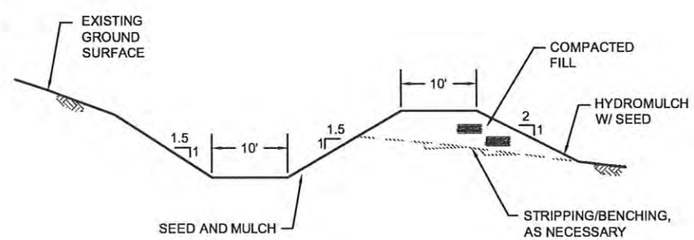

SECTION C SEDIMENT CATCHMENT BASIN
(LOOKING DOWNSTREAM)
GRAPHIC SCALE
10 0 5 10 20 40
(IN FEET)

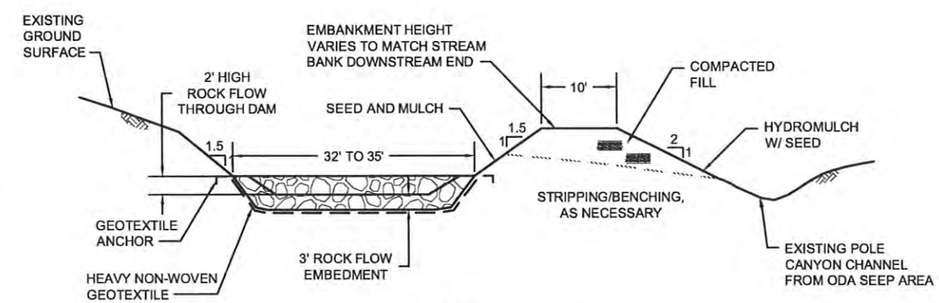

SECTION D SEDIMENT DAM
(LOOKING DOWNSTREAM)
GRAPHIC SCALE
10 0 5 10 20 40
(IN FEET)

REFERENCES	DATE	NO.	ISSUE/REVISED FOR	DRAWN	CHECKED	DATE	NO.	ISSUE/REVISED FOR	DRAWN	CHECKED
						11/08	2	AS-BUILT	EGD	JHR
						08/15/08	1	ISSUE FOR CONSTRUCTION	EGD	JHR
						07/21/08	0	ISSUE FOR REVIEW	EGD	JHR

PROFESSIONAL ENGINEER REGISTERED 6984 STATE OF IDAHO JOHN H. RAHE
John H. Rahe 28 Nov. '08

RAHE ENGINEERING, INC.
1070 YOUNGFIELD STREET
GOLDEN, CO 80401
PHONE: 303-238-1690
FAX: 303-233-4683

J.R. SIMPLOT AGRIBUSINESS COMPANY

SMOKY CANYON MINE - IDAHO

PROJECT: POLE CANYON ODA RUN-ON CONTROL CHANNEL

SHEET TITLE ENERGY DISSIPATION AND SEDIMENT CATCHMENT BASIN PLAN, SECTIONS, AND DETAILS

SHEET 6

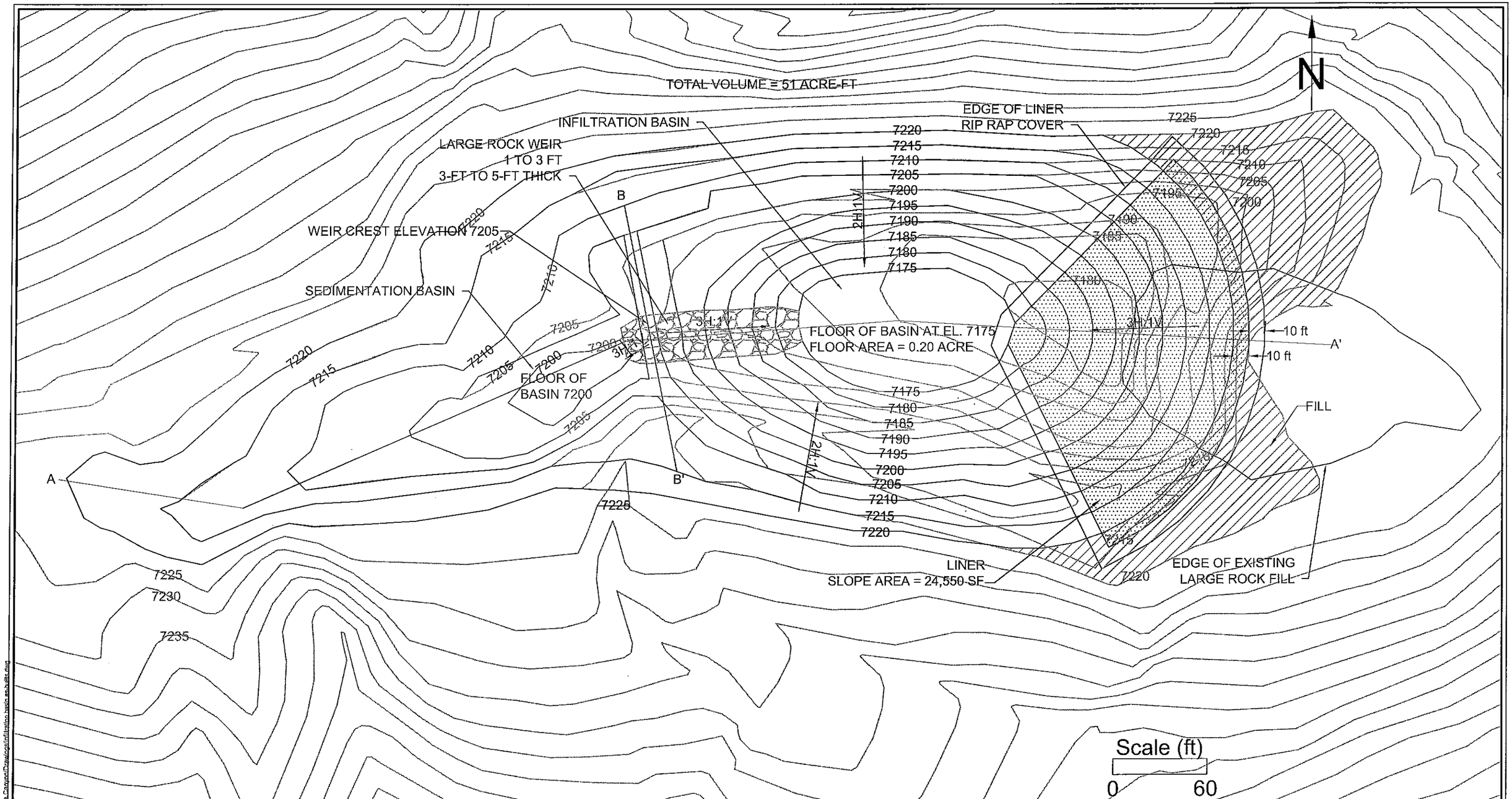

DATE	NO.	ISSUED/REVISED FOR	DRAWN	CHECKED
8/22/07	1	RAIWP	BZ	GB
10/8/07	2	DIFFERING GEOLOGY IN FLOOR	BZ	
11/25/08	3	AS-BUILT	BZ	GB

PROFESSIONAL ENGINEER REGISTERED 12820 11-25-08 STATE OF IDAHO WILLIAM ZIETLOW

BRIERLEY ASSOCIATES
Limited Liability Company
Creating Space Underground
2329 West Main Street, Suite 201,
Littleton, CO
PH 303-703-1405 FAX 303-703-1404
www.brierleyassociates.com

PROJECT
POLE CANYON BYPASS

PROJECT LOCATION: Pole Canyon, Idaho
DESIGNED FOR: JR Simplot Agribusiness

DESIGNED BY: B. Zietlow
PROJECT NO. 07027-000

SHEET TITLE
DESIGN MODIFICATION NO. 3
INFILTRATION BASIN PLAN

SHEET **1** OF 5

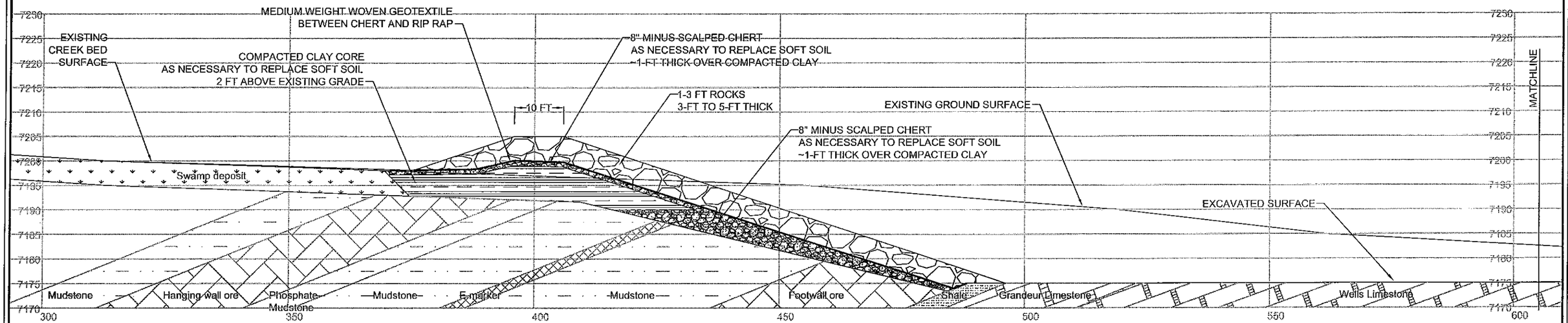

SECTION A-A'
(LOOKING NORTH)

DATE	NO.	ISSUED/REVISED FOR	DRAWN	CHECKED
8/22/07	1	RAIWP	BZ	GB
10/8/07	2	DIFFERING GEOLOGY IN FLOOR	BZ	
11/25/08	3	AS-BUILT	BZ	GB

PROFESSIONAL ENGINEER
REGISTERED
12820
11-25-08
STATE OF IDAHO
WILLIAM ZIETLOW

BRIERLEY ASSOCIATES
Limited Liability Company
Creating Space Underground
2329 West Main Street, Suite 201,
Littleton, CO
PH 303-703-1405 FAX 303-703-1404
www.brierleyassociates.com

PROJECT
POLE CANYON BYPASS

PROJECT LOCATION: Pole Canyon, Idaho
DESIGNED FOR: JR Simplot Agribusiness
DESIGNED BY: B. Zietlow
PROJECT NO. 07027-000

SHEET TITLE
DESIGN MODIFICATION NO. 3
INFILTRATION BASIN CROSS SECTIONS

SHEET **2** OF 5

M:\Projects\07027 Simplot\Pole Canyon\infiltrasic Xsect as-builts.dwg

NOTE: LINER DETAILS NOT SHOWN
FOR CLARITY

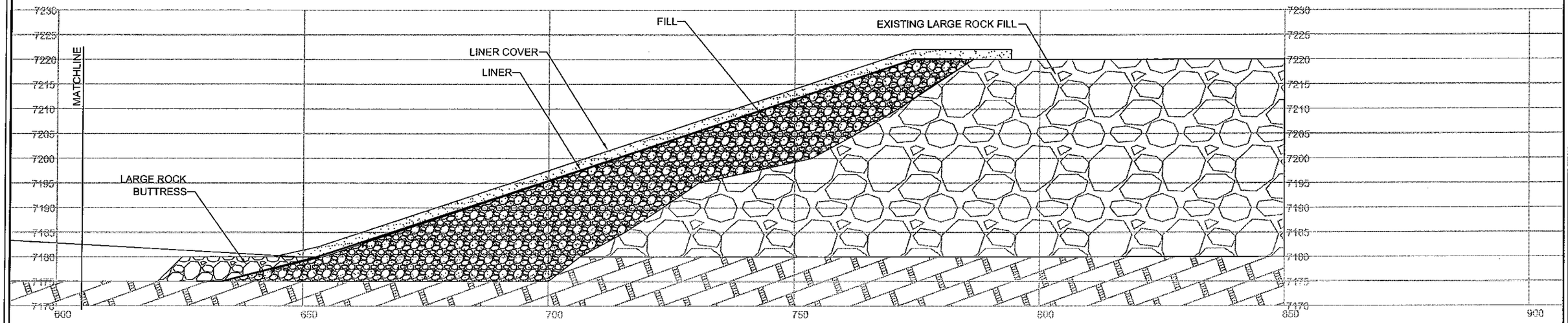

SECTION A-A'
(LOOKING NORTH)

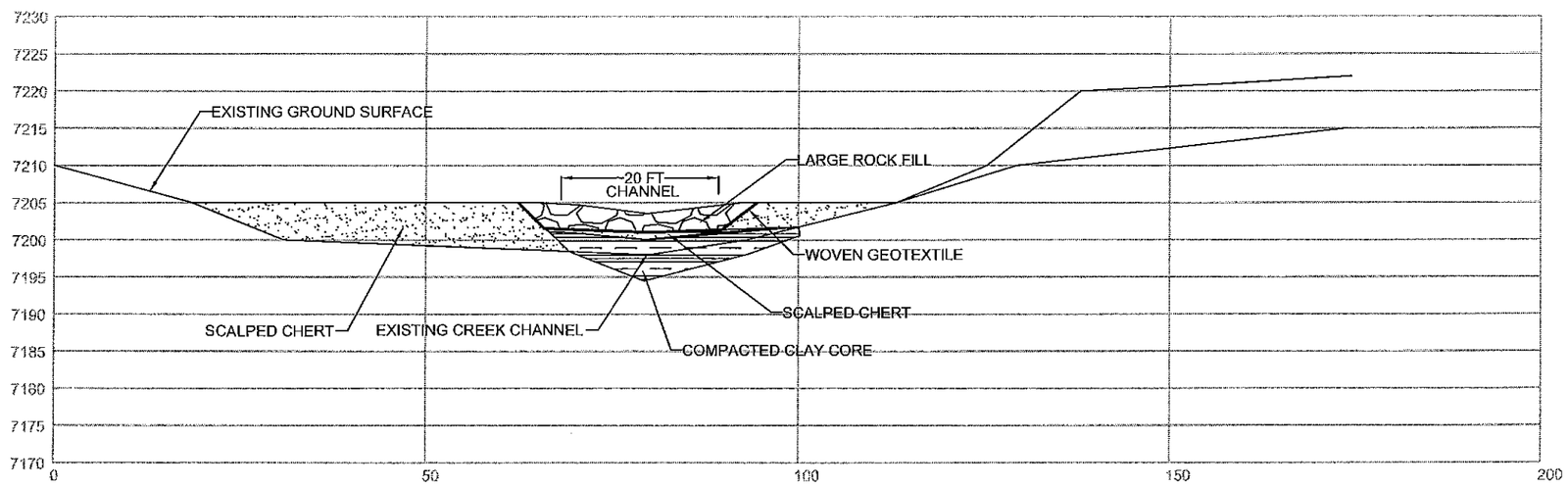

SECTION B-B'
(LOOKING DOWN VALLEY)

DATE	NO.	ISSUED/REVISED FOR	DRAWN	CHECKED
8/22/07	1	RAIWP	BZ	GB
10/8/07	2	DIFFERING GEOLOGY IN FLOOR	BZ	
11/25/08	3	AS-BUILT	BZ	GB

PROFESSIONAL ENGINEER
REGISTERED
12820
11-25-08
STATE OF IDAHO
WILLIAM ZIETLOW

BRIERLEY ASSOCIATES
Limited Liability Company
Creating Space Underground
2329 West Main Street, Suite 201,
Littleton, CO
PH 303-703-1405 FAX 303-703-1404
www.brierleyassociates.com

PROJECT
POLE CANYON BYPASS

PROJECT LOCATION: Pole Canyon, Idaho
DESIGNED FOR: JR Simplot Agribusiness
DESIGNED BY: G. Brierley
PROJECT NO. 07027-000

SHEET TITLE
DESIGN MODIFICATION NO. 3
INFILTRATION BASIN CROSS SECTIONS

SHEET **3** OF 5

M:\Projects\07027 Simplot Pole Canyon\Infl basin Xsect as-built.dwg

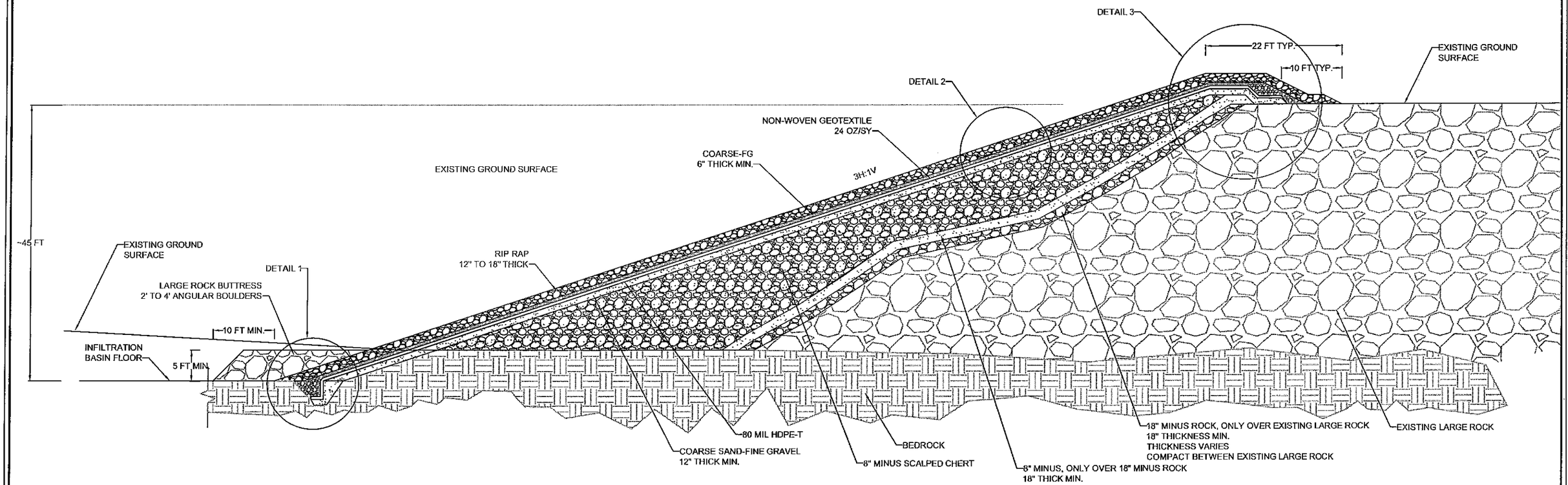

NOT TO SCALE

DATE	NO.	ISSUED/REVISED FOR	DRAWN	CHECKED
08/22/07	1	REVISED RDR/RAIWP	JMH	BZ
10/8/07	2	DIFFERING GEOLOGY IN FLOOR	BZ	
11/25/08	3	AS-BUILT	BZ	GB

PROFESSIONAL ENGINEER REGISTERED 12820 11-25-08 STATE OF IDAHO WILLIAM ZIETLOW

BRIERLEY ASSOCIATES
Limited Liability Company
Creating Space Underground
2329 West Main Street, Suite 201, Littleton, CO
PH 303-703-1405 FAX 303-703-1404
www.brierleyassociates.com

PROJECT
POLE CANYON BYPASS

PROJECT LOCATION: Pole Canyon, Idaho
DESIGNED FOR: JR Simplot Agribusiness
DESIGNED BY: B. Zietlow
PROJECT NO. 07027-000

SHEET TITLE
DESIGN MODIFICATION NO. 3
INFILTRATION BASIN LINER TYP. SECTION

SHEET **4** OF **5**

M:\Projects\07027 Simplot Pole Canyon\Drawings\Liner System Details as-built\.dwg

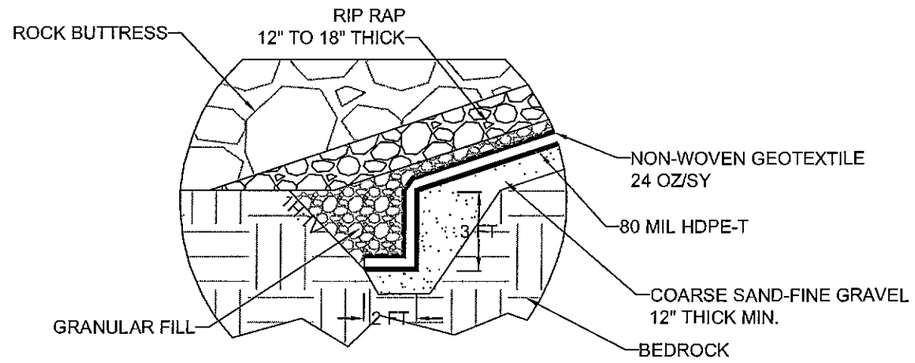

DETAIL1
BOTTOM LINER ANCHOR

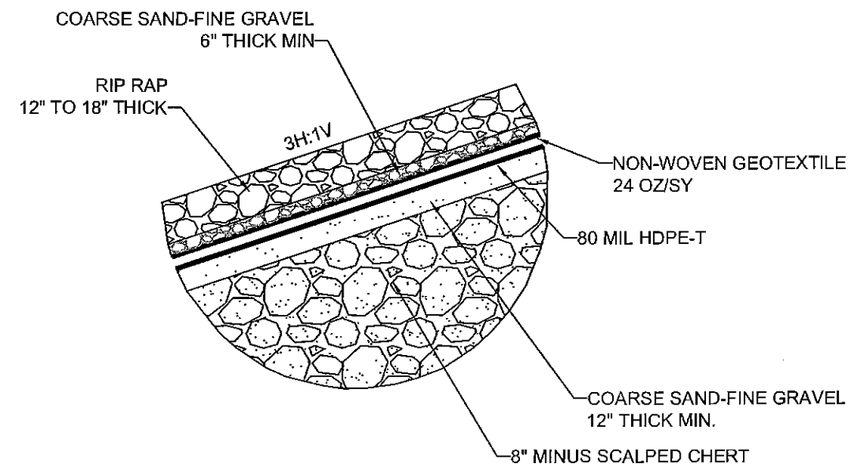

DETAIL2
TYPICAL LINER LAYERS

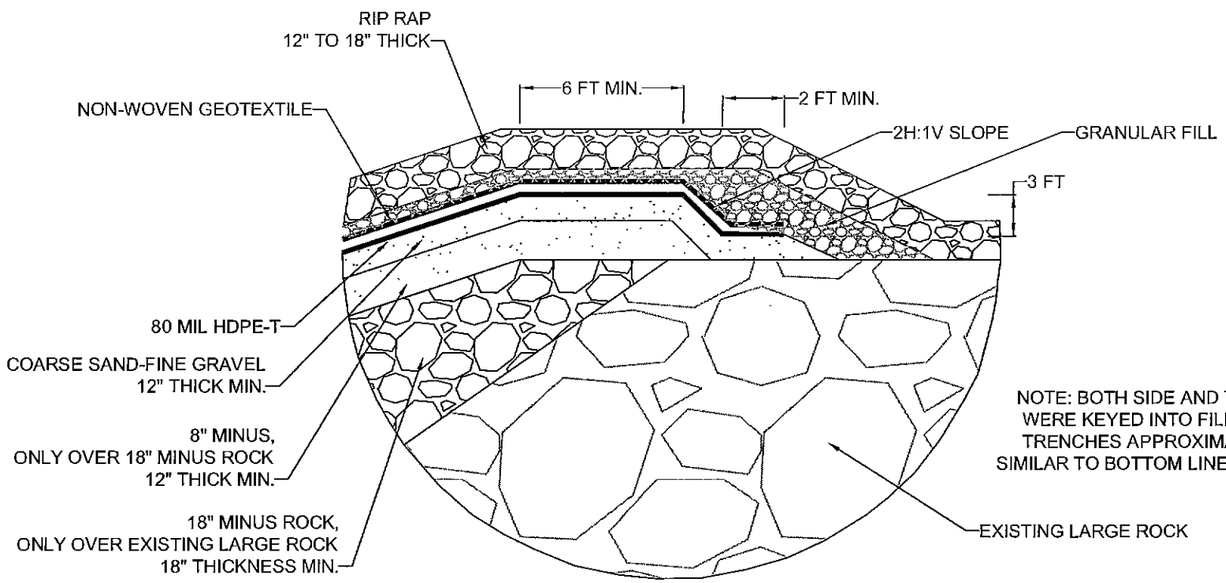

NOTE: BOTH SIDE AND TOP LINER EDGES WERE KEYED INTO FILL SLOPE ANCHOR TRENCHES APPROXIMATELY 3-FT DEEP, SIMILAR TO BOTTOM LINER ANCHOR TRENCH.

DETAIL 3
TOP LINER ANCHOR

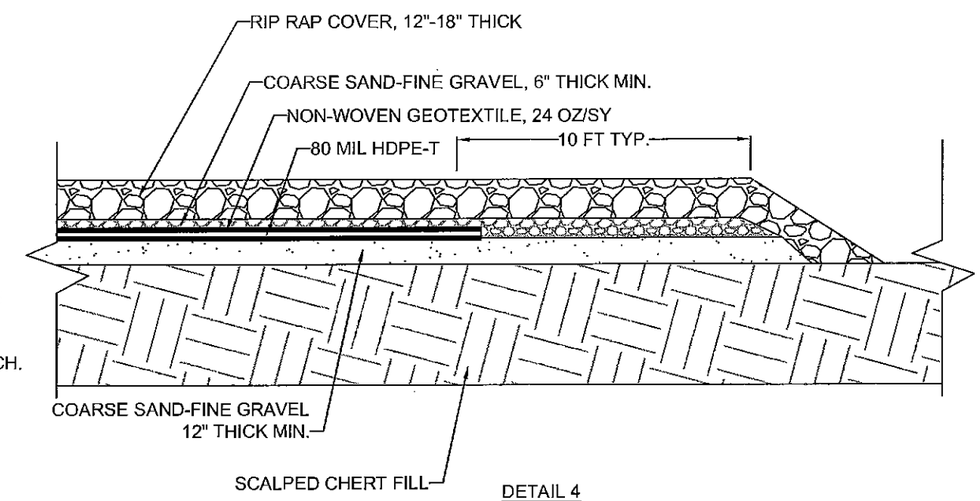

DETAIL 4
TYPICAL SIDE EDGE OF LINER

NOT TO SCALE

DATE	NO.	ISSUED/REVISED FOR	DRAWN	CHECKED
08/22/07	1	REVISED RDR/RAIWP	JMH	BZ
10/8/07	2	DIFFERING GEOLOGY IN FLOOR	JMH	
11/25/08	3	AS-BUILT	JMH	GB

PROFESSIONAL ENGINEER REGISTERED 12820 11-25-08 STATE OF IDAHO WILLIAM ZIETLOW

BRIERLEY ASSOCIATES
Limited Liability Company
Creating Space Underground
2329 West Main Street, Suite 201, Littleton, CO
PH 303-703-1405 FAX 303-703-1404
www.brierleyassociates.com

PROJECT
POLE CANYON BYPASS

PROJECT LOCATION: Pole Canyon, Idaho
DESIGNED FOR: JR Simplot Agribusiness
DESIGNED BY: B. Zietlow
PROJECT NO. 07027-000

SHEET TITLE
DESIGN MODIFICATION NO. 3
INFILTRATION BASIN LINER DETAILS

SHEET **5** OF 5

N:\Projects\07027 Simplot Pole Canyon\Drawings\Liner System Details as-builts.dwg