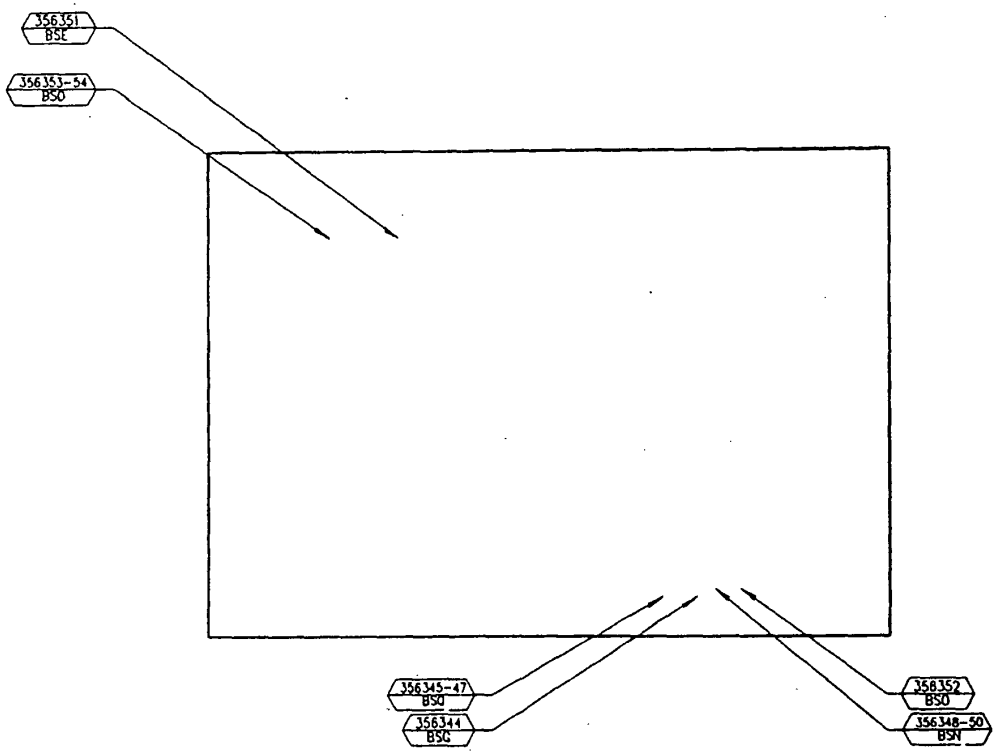

FIRST FLOOR

BULK SAMPLE CODE — 124376 BSA — SAMPLE IDENTIFICATION NUMBER

HALL-KONDRELL ENVIRONMENTAL SERVICES
4340 WEST FIFTEENTH STREET
LAWRENCE, KANSAS 66044

DATE: 05/26/89 021

G. HEILEMAN BREWING COMPANY
ASBESTOS ASSESSMENT SURVEY

PROJECT NUMBER: 0980193E
HEILEMAN BREWING COMPANY
RAINIER BREWING COMPANY
BUILDING #15 OLD KEG WASHING

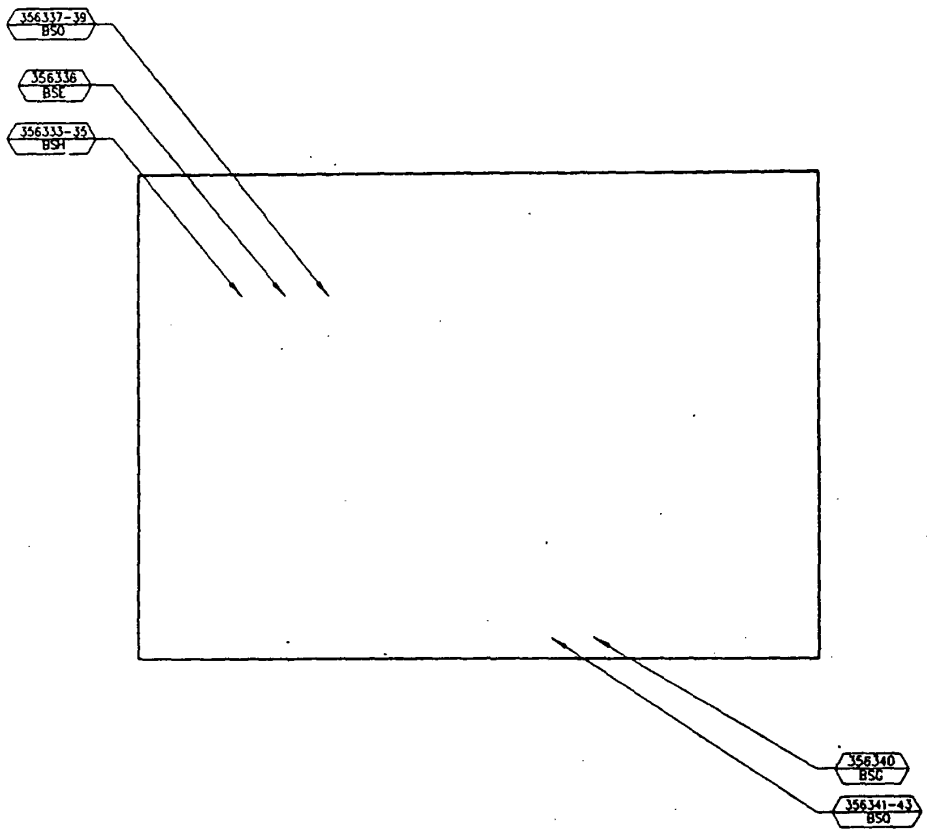

SECOND FLOOR

BULK SAMPLE CODE — 124378 BSA — SAMPLE IDENTIFICATION NUMBER

HALL-KIMBRELL ENVIRONMENTAL SERVICES
4840 WEST FIFTEENTH STREET
LAWRENCE, KANSAS 66044

DATE: 05/26/89 022

G. HEILEMAN BREWING COMPANY
ASBESTOS ASSESSMENT SURVEY

PROJECT NUMBER: 0980193E
HEILEMAN BREWING COMPANY
RAINIER BREWING COMPANY
BUILDING #15 OLD KEG WASHING

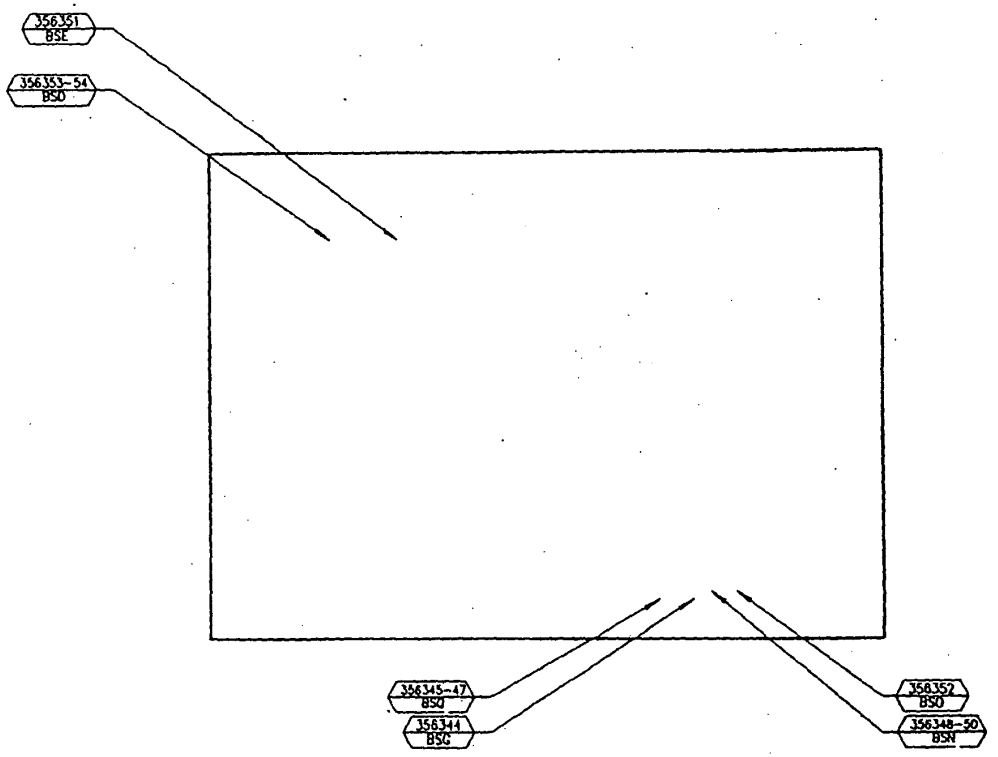

FIRST FLOOR

BULK SAMPLE CODE — 124376 BSA — SAMPLE IDENTIFICATION NUMBER

HALL-KIMBRELL ENVIRONMENTAL SERVICES
4340 WEST FIFTEENTH STREET
LAWRENCE, KANSAS 66044

DATE: 05/26/89 DZI

G. HEILEMAN BREWING COMPANY
ASBESTOS ASSESSMENT SURVEY

PROJECT NUMBER: 0980193E
HEILEMAN BREWING COMPANY
RAINIER BREWING COMPANY
BUILDING #15 OLD KEG WASHING

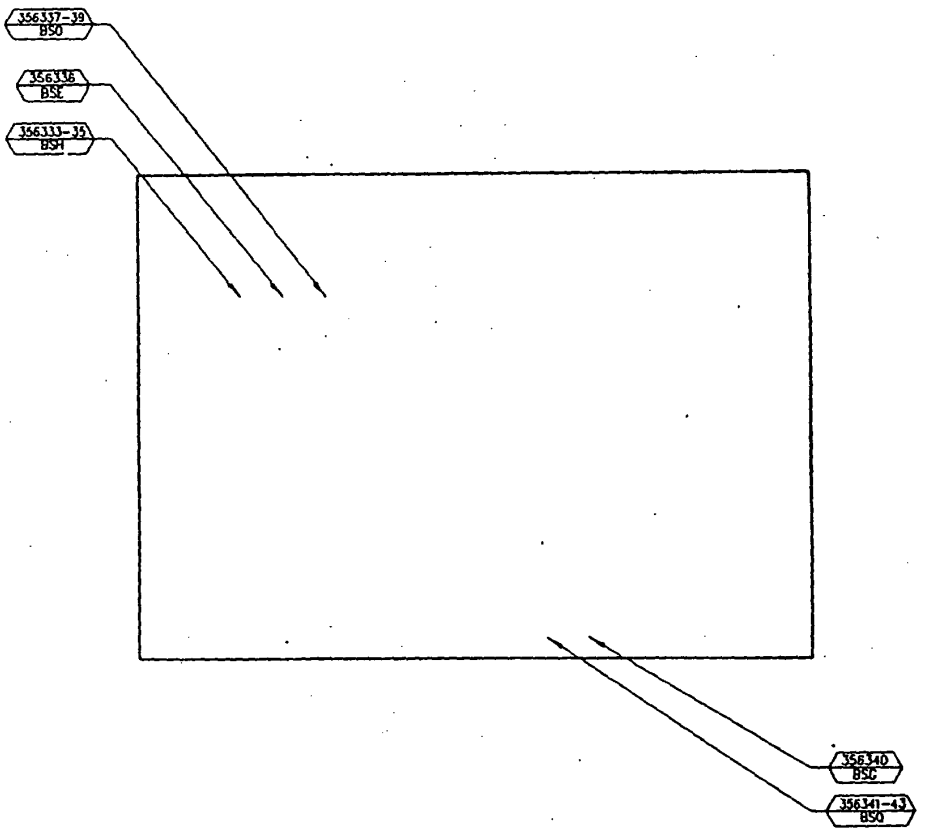

SECOND FLOOR

BULK SAMPLE CODE — 124376 BSA — SAMPLE IDENTIFICATION NUMBER

HALL-KIMBRELL ENVIRONMENTAL SERVICES
4640 WEST FRANKLIN STREET
LAWRENCE, KANSAS 66044

DATE: 05/26/89 022

G. HEILEMAN BREWING COMPANY
ASBESTOS ASSESSMENT SURVEY

PROJECT NUMBER: 0980193E
HEILEMAN BREWING COMPANY
RAINIER BREWING COMPANY
BUILDING #15 OLD KEG WASHING