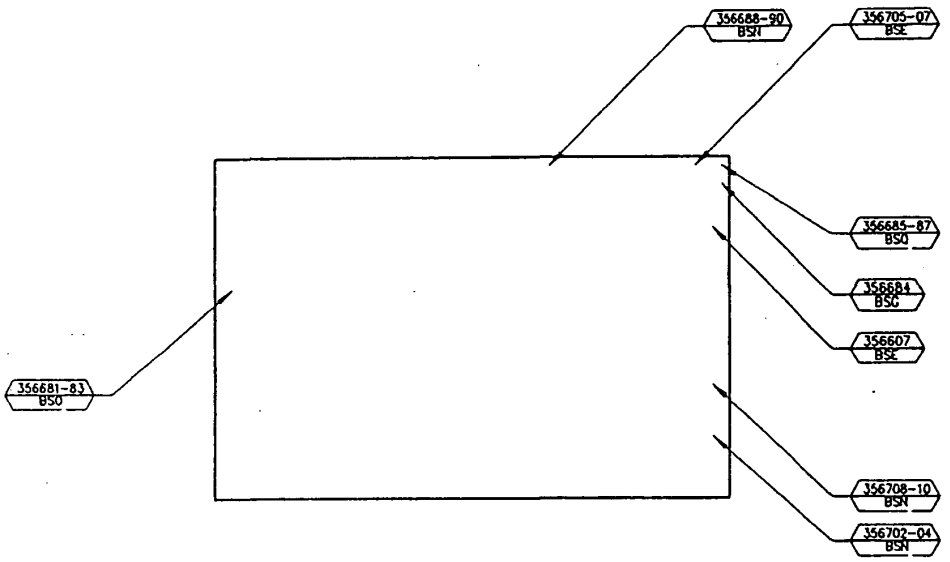

GROUND FLOOR

BULK SAMPLE CODE — 124376 BSA — SAMPLE IDENTIFICATION NUMBER

HALL-KONDELL ENVIRONMENTAL SERVICES
4840 WEST FIFTEENTH STREET
LAWRENCE, KANSAS 66044

DATE: 05/26/89 016

G. HEILEMAN BREWING COMPANY
ASBESTOS ASSESSMENT SURVEY

PROJECT NUMBER: 0980193E
HEILEMAN BREWING COMPANY
RAINIER BREWING COMPANY
BUILDING #10/11/12/23 PART 11

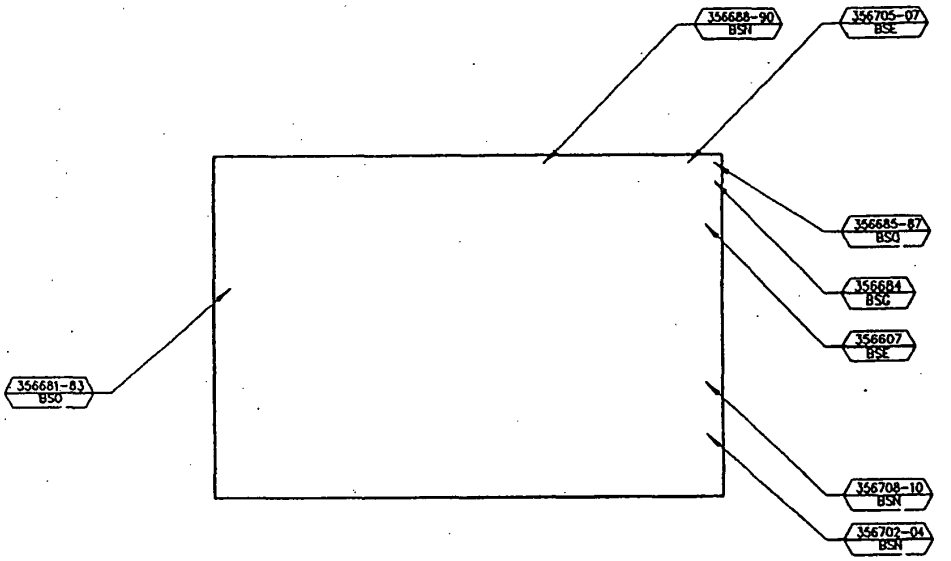

GROUND FLOOR

BULK SAMPLE CODE → 124376 BSA ← SAMPLE IDENTIFICATION NUMBER

HALL-KIMBRELL ENVIRONMENTAL SERVICES
4840 WEST FIFTEENTH STREET
LAWRENCE, KANSAS 66044

DATE: 05/26/89 016

G. HEILEMAN BREWING COMPANY
ASBESTOS ASSESSMENT SURVEY

PROJECT NUMBER: 0980193E
HEILEMAN BREWING COMPANY
RAINIER BREWING COMPANY
BUILDING #10/11/12/23 PART 11