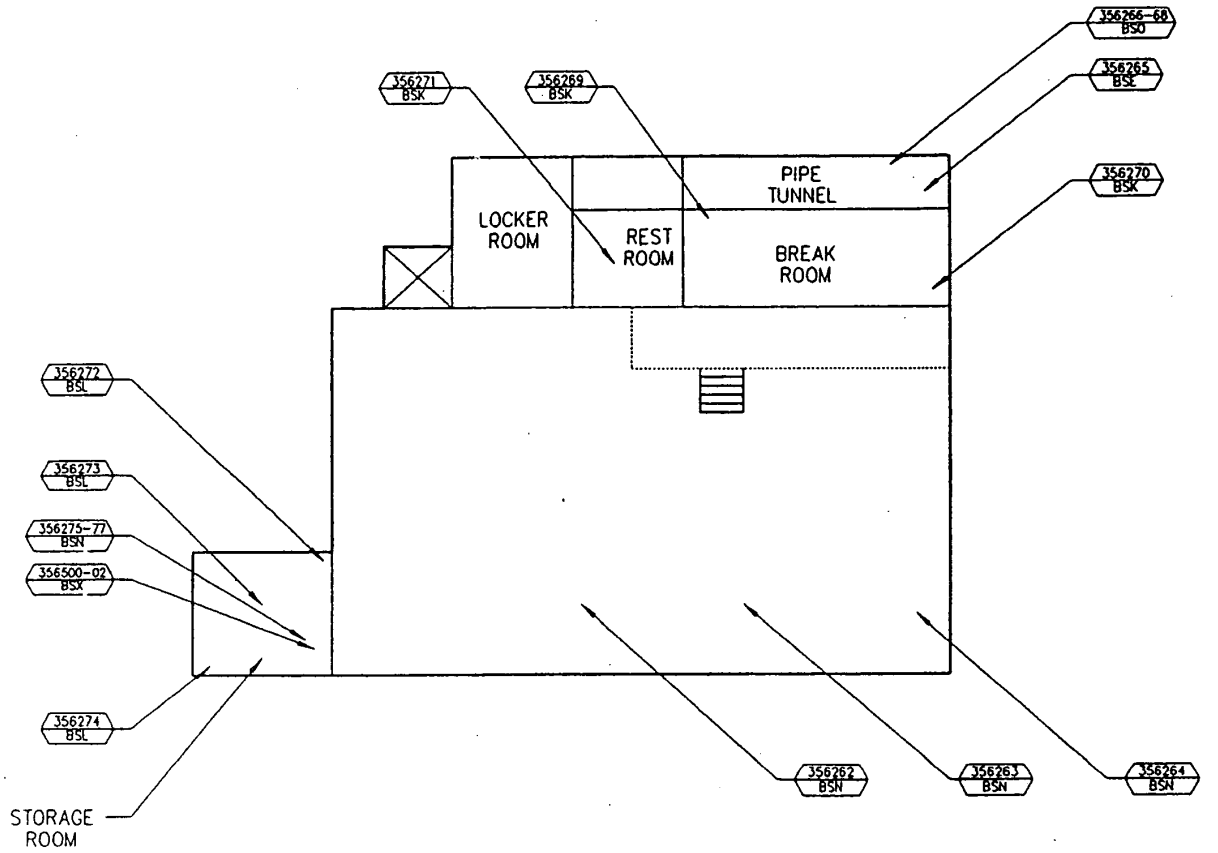

GROUND FLOOR

BULK SAMPLE CODE — 124376 BSA — SAMPLE IDENTIFICATION NUMBER

HALL-KIMBRELL ENVIRONMENTAL SERVICES
4840 WEST FREEDOM STREET
LAWRENCE, KANSAS 66044

DATE: 05/26/89 015A

G. HEILEMAN BREWING COMPANY
ASBESTOS ASSESSMENT SURVEY

PROJECT NUMBER: 0980193E
HEILEMAN BREWING COMPANY
RAINIER BREWING COMPANY
BUILDING #9

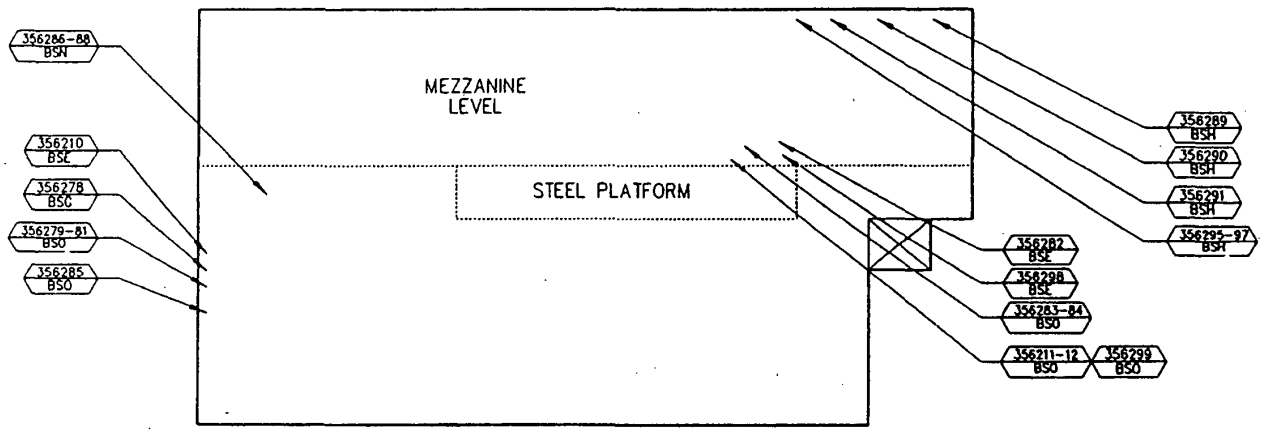

SECOND FLOOR

BULK SAMPLE CODE — 124376 BSA — SAMPLE IDENTIFICATION NUMBER

HALL-KIMBRELL ENVIRONMENTAL SERVICES
4840 WEST FIFTEENTH STREET
LAWRENCE, KANSAS 66044

DATE: 05/26/89
0158

G. HEILEMAN BREWING COMPANY
ASBESTOS ASSESSMENT SURVEY

PROJECT NUMBER: 0980193E
HEILEMAN BREWING COMPANY
RAINIER BREWING COMPANY
BUILDING #9

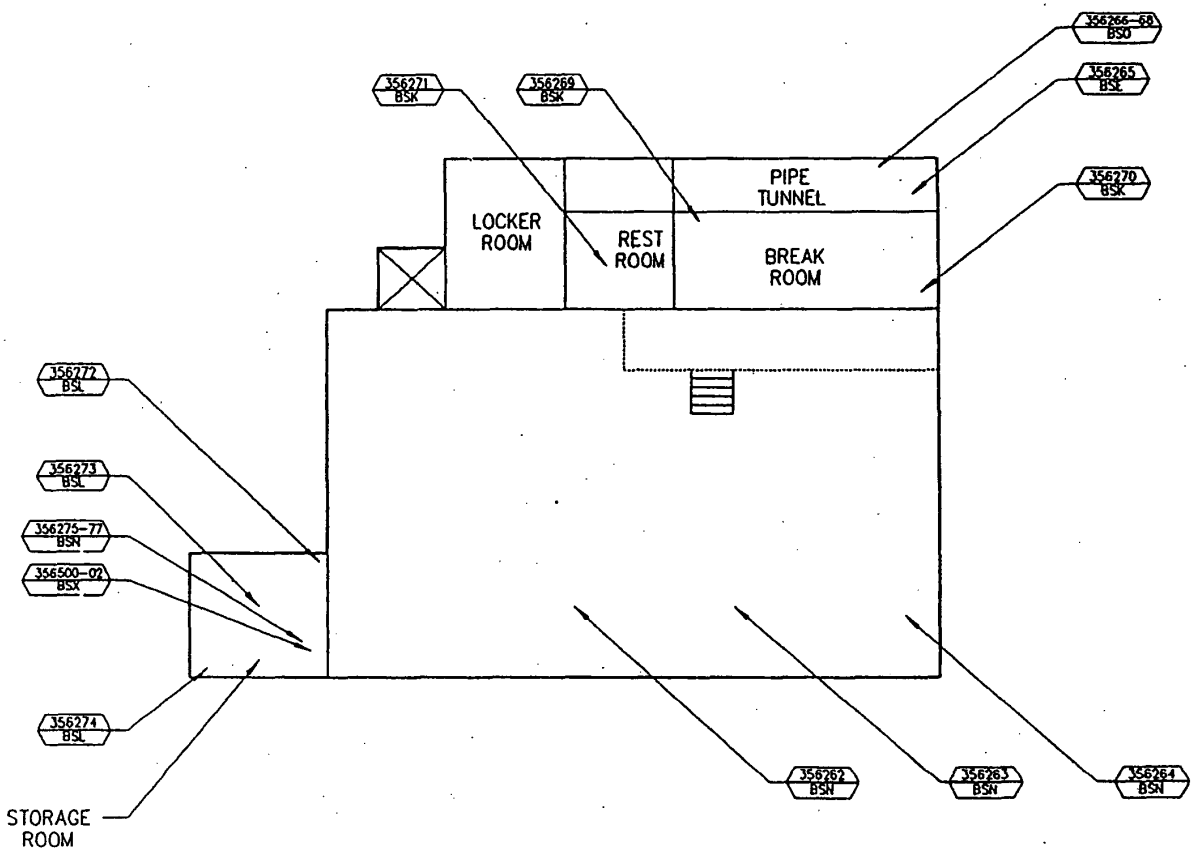

GROUND FLOOR

BULK SAMPLE CODE — 124376 BSA — SAMPLE IDENTIFICATION NUMBER

HALL-KIMBRELL ENVIRONMENTAL SERVICES
4840 WEST FREEDOM STREET
LAWRENCE, KANSAS 66044

DATE: 05/26/89 015A

G. HEILEMAN BREWING COMPANY
ASBESTOS ASSESSMENT SURVEY

PROJECT NUMBER: 0980193E
HEILEMAN BREWING COMPANY
RAINIER BREWING COMPANY
BUILDING #9

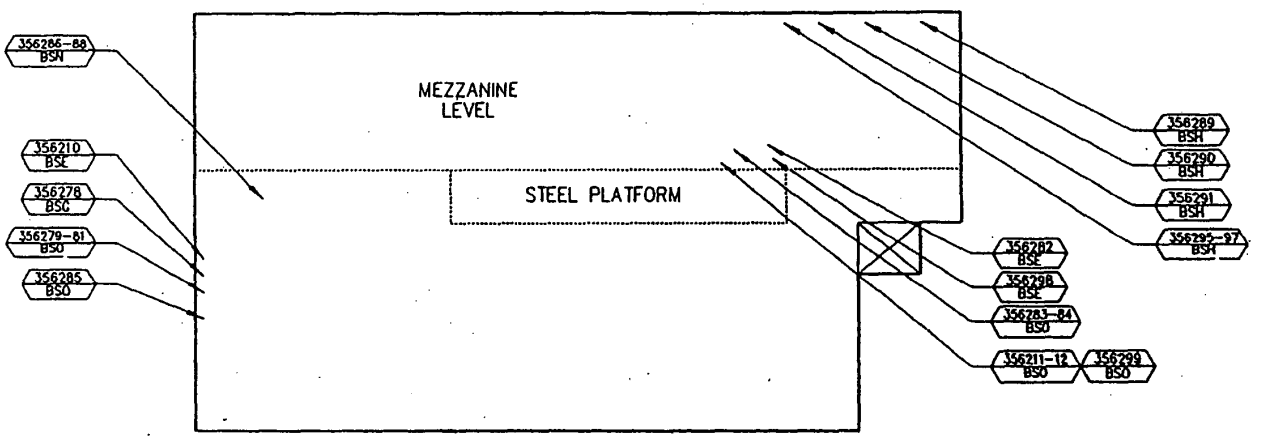

SECOND FLOOR

BULK SAMPLE CODE — 124376 BSA — SAMPLE IDENTIFICATION NUMBER

HALL-KIMBRELL ENVIRONMENTAL SERVICES
4840 WEST FRANKLIN STREET
LAWRENCE, KANSAS 66044

DATE: 05/26/89 0150

G. HEILEMAN BREWING COMPANY
ASBESTOS ASSESSMENT SURVEY

PROJECT NUMBER: 0980193E
HEILEMAN BREWING COMPANY
RAINIER BREWING COMPANY
BUILDING #9