US EPA RECORDS CENTER REGION 5
1003139

RCRA FACILITY INVESTIGATION WORK PLAN

REFINED METALS CORPORATION SITE

Prepared For:

REFINED METALS CORPORATION
Beech Grove, Indiana

Prepared By:

ADVANCED GEOSERVICES CORP.
Chadds Ford, Pennsylvania

RECEIVED
MAR 04 1999
Enforcement & Compliance Assurance Branch
Waste, Pesticides & Toxics Division
U.S. EPA – REGION 5

Project No. 98-478-01
Revised: March 3, 1999

TABLE OF CONTENTS

Page No.

1.0 Introduction 1
- 1.1 General Site Description 1
- 1.2 Purpose 2
- 1.3 Work Plan Organization 3
- 1.4 Disclaimer 4

2.0 Facility Background 5
- 2.1 Facility Description 5
- 2.2 Ownership History 6
- 2.3 Operational History 6
  - 2.3.1 Smelting 6
  - 2.3.2 Refining 7
  - 2.3.3 Waste Water Treatment 8
  - 2.3.4 Storage Tanks 9
- 2.4 Regulatory History 10
  - 2.4.1 RCRA 10
  - 2.4.2 CERCLA 14
  - 2.4.3 State and Local Permits 14

3.0 Site Setting 17
- 3.1 Physiographic Setting 17
- 3.2 Topographic Setting 17
- 3.3 Surrounding Land Use 18
- 3.4 Regional Geology 19
- 3.5 Hydrogeology 20
  - 3.5.1 Regional Hydrogeology 20
  - 3.5.2 Site Hydrogeology 21
- 3.6 Ecological Setting 22

4.0 Nature and Extent of Contamination 26
- 4.1 Behavior of Lead 26
- 4.2 Discussion of Source Areas 26
- 4.3 Summary of Previous Sampling Activities 27
- 4.4 Interior Samples 28
  - 4.4.1 Warehouse and Refining Building 28
  - 4.4.2 Furnace Room Samples 28
  - 4.4.3 Material Storage Area 29
  - 4.4.4 Battery Breaker Building 29

TABLE OF CONTENTS (continued)

4.5 Exterior Soil Samples 29
4.6 Groundwater 30
4.7 Surface Water 31
4.8 Air 31
4.9 Solid Waste Management Units 32
4.9.1 Outdoor Waste Piles 32
4.9.2 Indoor Waste Piles 32
4.9.3 Lined Lagoon 33

4.10 Potential Human Exposure 33

5.0 Proposed Scope of Work 35
5.1 Focus of the Investigation 35
5.2 Groundwater Evaluation 35
5.2.1 Groundwater Flow 35
5.2.2 Groundwater Quality 37
5.2.3 Sampling Procedures 38
5.2.3.1 Well Evacuation 38
5.2.3.2 Sample Withdrawal 39

5.3 Soil Sampling 40
5.3.1 On-Site Soil Sampling 40
5.3.2 Off-Site Soil Sampling 40
5.3.3 Diesel Spill Soil Sampling 41

5.4 Interior Sampling 42
5.4.1 Floor Dust Sampling 42
5.4.2 Subfloor Soil Sampling 42

5.5 Sediment Sampling 42
5.6 Supplementary Survey 43

6.0 Potential Corrective Measure Technologies 44
6.1 No-Action Alternative 44
6.2 Containment 44
6.3 Off-Site Disposal 45
6.4 Soil Washing 45
6.5 Resource Recovery and Recycling 46
6.6 Stabilization/solidification 47

TABLE OF CONTENTS (continued)

7.0 Ancillary Plans 48

8.0 References 49

LIST OF TABLES

Table No.

2-1 List of Material Used
3-1 Residential Wells within One Mile
4-1 Analytical Results of Lead in Interior Floor Samples
4-2 Analytical Results of Lead in Interior Subsurface Soil Samples
4-3 Analytical Results of Lead in Exterior Soil Samples

LIST OF FIGURES

Figure No.

1-1 Site Location Map
1-2 Existing Conditions
2-1 Process Flow Diagram
3-1 Surface Waters and Surrounding Land Uses
3-2 Residential Wells within a One Mile Radius of the Site
3-3 Location of Major Habitat Types On-Site
4-1 Wind Rose
4-2 Concentration of Lead in Floor Samples
4-3 Concentration of Lead in Interior Subsurface (1 ft) Soil Samples
4-4 Concentration of Lead in Interior Subsurface (2-4 ft) Soil Samples
4-5 Concentration of Lead in Exterior Surface Soil Samples
4-6 Concentration of Lead in XRF and Geoprobe Exterior Soil Samples (4-12"), April 1996
4-7 Concentration of Lead in XRF and Geoprobe Exterior Samples 2 ft .-4 ft., April 1996
5-1 Proposed Soil Sample Location Map
5-2 Proposed Dust/Subsurface Soil Sample Locations
5-3 Proposed Sediment Sample Locations

LIST OF APPENDICES

Appendix

A Project Management Plan
B Quality Assurance Project Plan and Data Management Plan

TABLE OF CONTENTS (continued)

C Health and Safety Plan
D Community Relations Plan

LIST OF ATTACHMENTS

Attachment
1 Available State RCRA Inspection Reports
2 Monitoring Well Logs
3 Monitoring Well Results

1.0 INTRODUCTION

1.1 GENERAL SITE DESCRIPTION

The Refined Metals Corporation (RMC) facility in Beech Grove, Indiana (Site) was the location of secondary lead smelting operations from 1968 through 1995. The location of the Site is shown on Figure 1-1. The Site ceased normal operations on December 31, 1995. The Site, as shown of Figure 1-2, covers approximately 24 acres which includes approximately 10 acres where smelting operations occurred. The remainder of the Site consists of areas of lawn and woods. The former smelter area contains several structures identified as the Battery Breaker, Material Storage and Furnace, Refining, Waste Water Treatment/Filter Press, and Office Buildings. Other smaller structures exist including a vehicle maintenance building, baghouses, and pump houses.

During its operating life, the facility handled materials which were classified as hazardous materials or hazardous wastes under the Resource Conservation and Recovery Act (RCRA). These primarily consisted of lead bearing materials that were processed for lead recovery. In accordance with the requirements of RCRA, the facility completed and submitted a RCRA permit application. On November 19, 1980 the facility was granted approval to operate indoor and outdoor hazardous waste piles under Interim Status. Facility documents also identify a lined lagoon as a RCRA permitted unit; however, it does not appear to have been included on the Facility Part A permit until after 1991. The lagoon was, and still is used, to collect facility storm water runoff.

At this time, the Site is idle except for the waste water treatment system which remains in operation. The waste water treatment system remains in-place to collect and treat storm water runoff from the lined lagoon and other site areas. The indoor and outdoor waste piles have been removed.

1.2 PURPOSE

On July 14, 1998 Refined Metals Corporation entered into a Consent Decree with the United States Environmental Protection Agency (EPA) and the Indiana Department of Environmental Management (IDEM). The objectives of the Consent Decree are as follows:

1. Effectuate closure of waste piles and surface impoundment by submitting a closure plan and post-closure plan, if necessary, and then to implement the plan(s) as approved;

2. Perform a RCRA Facility Investigation (RFI) to evaluate and determine the full nature and extent of releases and collect information necessary to support human health and ecological risk assessments, and a Corrective Measures Study, or Interim Measures;

3. Perform Interim/Stabilization Measures to abate threats to human health and the environment;

4. Perform a Corrective Measures Study to develop and evaluate alternatives and to recommend a final corrective measure(s);

5. Perform Corrective Measures; and,

6. Pay a fine to address the alleged Clean Air Act and RCRA violations.

Pursuant to Section VI, Paragraph 41 of the Consent Decree (Compliance Requirements for Corrective Action), Advanced GeoServices Corp. (AGC) has prepared this RFI Work Plan on behalf of RMC. This RFI Work Plan has been prepared in accordance with Exhibit B of the Consent Decree and the EPA's RCRA Facility Investigation Guidance Document (EPA 530/SW-89-031).

The RFI Work Plan has been developed with the intent to utilize existing information and propose the collection of additional information necessary to determine the presence, magnitude, extent and mobility of hazardous waste and hazardous waste constituents on and beneath the former site area and adjacent off-site areas that may have originated from the RCRA permitted hazardous waste or solid waste management units at the Site. The information cited in this report was developed using the Consent Decree, information provided by RMC employees, and files and reports identified in a review of facility environmental files.

1.3 WORK PLAN ORGANIZATION

This work plan contains a detailed description of current conditions, a pre-investigation evaluation of corrective measures technologies, and required RFI Work Plan Components. This document is organized as follows:

- Section 1.0 - General introduction provided above;
- Section 2.0 - Facility background, including its operating history and regulatory status;
- Section 3.0 - Geologic setting and ecological setting;
- Section 4.0 - A summary of the nature and extent of contamination based on existing information;
- Section 5.0 - The proposed investigatory activities to be conducted under the scope of this work plan;

- Section 6.0 - Overview of remedial technologies that are commonly used at sites with similar contaminants of concern and conditions, if corrective action is deemed appropriate; and

- Section 7.0 - Ancillary plans to be used during performance of this work.

1.4 DISCLAIMER

Portions of this document, related to facility history and operation are based on documents and oral information provided by RMC. AGC has not independently verified this information. While the information presented is believed to be accurate to the best of our knowledge, AGC cannot guarantee the completeness or accuracy of the information supplied.

REF. U.S.G.S. 7 1/2 MINUTE
BEECH GROVE, IND
QUADRANGLE MAP

REFINED METALS CORPORATION
RCRA FACILITY INVESTIGATION WORK PLAN

BEECH GROVE, INDIANA

Date: 8/27/98	SITE LOCATION MAP
Scale: N.T.S.	
Drawn By: P.S.G.	
Checked By: S.W.K.	Advanced GeoServices Corp. Chadds Ford Business Campus, Rts. 202 & 1 Brandywine One, Suite 202 Chadds Ford, Pennsylvania 19317
Project Mgr: P.G.S.	
Dwg No. 98478-01	
Issued: AUG 27 1998	Project No. 98-478-01 — FIGURE: 1-1

J:\REFINED METALS\DRAWINGS\9847801\98479 .B

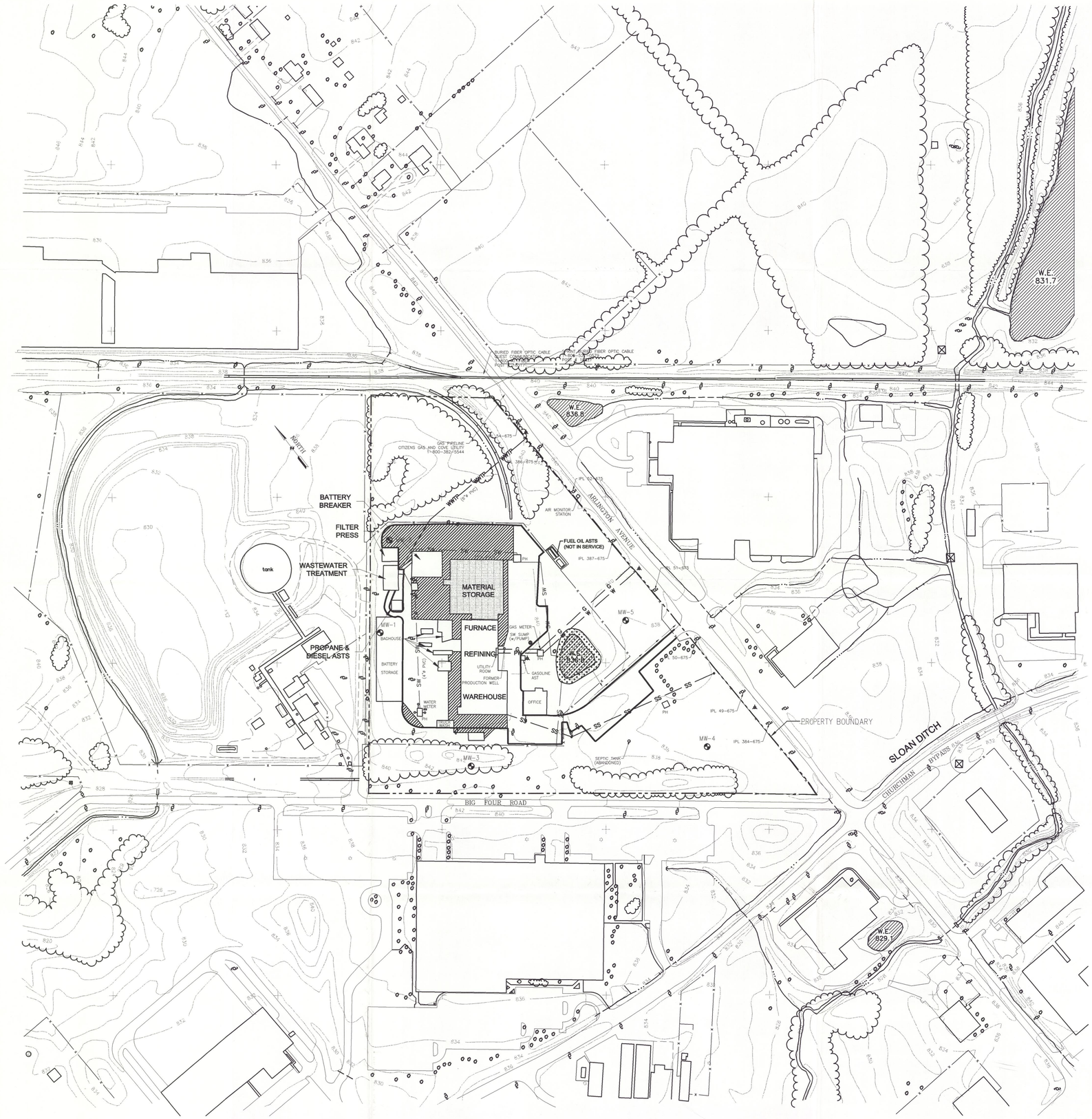

LEGEND

- FORMER IMPOUNDMENT OVERFLOW DITCH
- G — GAS
- SS — SANITARY SEWER
- SW — STORMWATER SEWER
- WWTP — 6" PVC WASTE WATER TREATMENT LINE
- PW — POND WATER LINE
- LIMIT OF EXISTING PAVEMENT
- FIRE HYDRANT
- LIGHT POLE
- MONITORING WELL
- PH — PUMP HOUSE
- STORMWATER INLET

REGULATED UNITS

- OUTDOOR WASTE PILES
- INDOOR WASTE PILES
- LINED LAGOON

NOTE: UTILITY LOCATIONS ARE APPROXIMATE BASED ON FIELD VISIT BY AGC. LOCATIONS HAVE NOT BEEN SURVEYED.

150 0 150 300
SCALE IN FEET

REFINED METALS CORPORATION CLOSURE PLAN

BEECH GROVE, INDIANA

Date:	6/2/98
Scale:	1"=150'
Drawn By:	P.S.G.
Checked By:	E.M.G.
Project Mgr.:	P.G.S.
Project No.:	98-478-01
Dwg No.	98478-01
Issued:	MAR - 3 1999

EXISTING CONDITIONS

Advanced GeoServices Corp.
Chadds Ford Business Campus, Rts. 202 & 1
Brandywine One, Suite 202
Chadds Ford, Pennsylvania 19317

FIGURE: 1-2

J:\REFINED METALS\DRAWINGS\9847801\98478-01

2.0 FACILITY BACKGROUND

2.1 FACILITY DESCRIPTION

The RMC facility is situated at 3700 South Arlington Avenue in Marion County, Beech Grove, Indiana, approximately four miles south southeast of downtown Indianapolis. The Site occupies approximately 24 acres, of which approximately 10 acres represented the active manufacturing area (this includes paved areas and buildings). The remaining 14 acres includes grassed and wooded site areas. The configuration of the Site is triangular, bounded by Arlington Avenue (oriented in a north to south direction representing the hypotenuse), Big Four Road (along the base) and the common property line with a natural gas company forming the third side. The northwest end of the triangle is truncated by a railroad right-of-way.

The Site is relatively flat with less than 10 feet of total relief. Natural site drainage is towards the north and east. The former manufacturing area is characterized by nearly 80,000 square feet (sf) of structures which house the battery breaker, a waste water treatment plant, a filter press, material storage areas, a blast furnace, a dust furnace, a metals refining area, warehouse and offices. In addition, there are four baghouses, a vehicle maintenance structure, and five storm water pump houses.

The ground surface surrounding the buildings is currently paved (primarily with concrete). Older facility photographs indicate that areas northwest and northeast of the main facility structure were un-paved except for a concrete driveway which encircled the facility. The paved surface areas are sloped to drain toward catch basins situated around the Site. The catch basins in-turn flow to the storm water pump houses that convey collected storm water to the waste water treatment plant for processing. Drainage from the southeastern areas of the Site is conveyed to a 750,000 gallon stormwater and fire control lagoon. The lagoon was originally lined with concrete. During 1988, the lagoon was cleaned out and covered with a geomembrane liner.

2.2 OWNERSHIP HISTORY

The Site was reportedly undeveloped woodlands until 1968. In 1968 the property was developed as a secondary lead smelter by National Lead. National Lead operated the facility from 1968 through 1980, when it was sold to Exide Corporation. In 1985, the Site was purchased from Exide Corporation by Refined Metals Corporation (RMC). RMC continued to operate the facility until the cessation of operations on December 31, 1995. From April 14, 1995, through December 31, 1995, operations were reduced to enriching and casting lead ingots from off-specification lead products. Since 1996, no production has taken place. Today the facility is idle except for operation of the waste water treatment facility which is still used to treat storm water runoff from the former manufacturing areas. The warehouse area is also currently being used to temporarily store re-manufactured starters and alternators (in boxes and on pallets) from a nearby automotive parts facility.

2.3 OPERATIONAL HISTORY

2.3.1 Smelting

The facility was constructed as a secondary lead smelter to recycle lead-acid batteries and other lead bearing wastes. Auto batteries constituted 90 percent of the materials recycled, and the remainder was waste material from battery manufacturers and other lead scrap. Prior to 1984, battery crushing was performed off-site at other commercial facilities. In 1984, the battery breaker was constructed on-site. During post-1984 operations, the batteries were temporarily stored in trailers or on pallets in a paved storage yard. The batteries were then fed into the battery crusher where the tops of the batteries were sawed off and the sulfuric acid was collected in a sump and transferred into a stainless steel tank that drained to the wastewater treatment system. The battery casings and their contents were tumbled and crushed. Lead plates and other lead parts were separated and transported to waste piles to be later fed into the furnace. The battery casings were shredded and separated into plastic and ebonite in a flotation tank. The plastic was blown into a trailer for sale to an offsite recycler.

Ebonite casings were placed in a separate waste pile and then fed into the blast furnace as a supplemental fuel.

Prior to 1984, the storage piles were located outdoors with minimal spill and runoff control. The majority of storm water runoff from the piles and other work areas flowed and/or was pumped to the storm water lagoon where it was allowed to evaporate and when the lagoon was full, allowed to overflow to a drainage ditch that flowed off-site toward the east. A small portion of the drainage from the active manufacturing area flowed uncontrolled toward the north to the wooded area and then along an intermittent stream to the north (Figure 3-1). During 1984, the material storage building was constructed and the waste piles were moved inside. Reportedly, material was occasionally stored outside after 1984 when the material storage building was full.

One blast furnace and one dust furnace were used at the facility. During operation, the blast furnace used coke and oxygen-enriched air for heating. Liquid oxygen was stored in a 10,000-gallon tank located north of the blast furnace building. Scrap iron was added to the blast furnace to remove sulfur. During the smelting process, molten lead would form at the bottom of the furnace, and the slag would float to the top. The slag was poured into ingots and solidified before being sent off-site for disposal. The dust furnace used natural gas and oxygen-enriched air to melt baghouse dust, which was then fed into the blast furnace.

2.3.2 Refining

Molten lead from the blast furnace was tapped from the bottom of the furnace to kettles in the adjacent refining and casting area. In the kettles, the molten lead was tested to determine its quality. Antimony and tin were either added or removed to create the required lead type and quality. A list of principle materials used on-site is provided in Table 2-1. Removal of antimony and tin was performed by adding sodium hydroxide or through oxidation. If the lead contained excess copper it was removed through the addition of red phosphorus. The excess antimony, tin, copper and other impurities formed as a dross on top of the molten lead and was removed through skimming. The

dross was returned to the blast furnace. The refined lead was typically cast into 60-pound bars that were cooled, extracted and stacked for shipment off-site.

The refining kettles were situated with their tops approximately at floor level in the refining and casting building. The bottom of the kettles extended below grade into a sub-floor area. The kettles were heated by natural gas burners located in the sub-floor area. A process flow diagram for the smelting and refining process is presented as Figure 2-1.

2.3.3 Waste Water Treatment

With the installation of the battery crusher in 1984 waste sulfuric acid, and acidic and lead-bearing waste water was actively collected for treatment through a batch neutralization process. During 1988 the Site was also re-graded and storm water drainage modified to allow the collection and treatment of all storm water runoff from the active manufacturing areas. Waste water effluent was discharged to the Beech Grove Municipal Sanitary Sewer system. The waste water treatment system includes the following;

1. Three 10,000-gallon stainless steel storm water collection tanks set into concrete sumps with one-foot thick walls and bottoms. PVC pipes conveyed the water from the pump stations to the sumps. The tanks were cleaned annually and inspected for flaws.

2. A 6,000-gallon stainless steel-lined sump in the battery breaker building for the collection of waste sulfuric acid and waste water.

3. Two 4,000 gallon fiberglass neutralization tanks.

4. Neutralization was performed with magnesium hydroxide and sodium hydroxide.

5. Chelation and coagulation of the solid particles was performed with polymers creating a settleable floc.

6. Separation of the water from the floc occurred in a slant-plate clarifier.

7. Concentration of the solids was achieved with a plate and frame filter press.

8. Treated effluent was discharged to the Beech Grove sanitary sewer system.

A septic system clean-out was found in the lawn area southeast of the former manufacturing facility. The waste water treatment system operator was unaware that a septic system existed and did not know when the system would have been active. The clean-out is near the alignment of the existing sanitary sewer that receives flow from the facility showers and bathrooms.

2.3.4 Storage Tanks

Reportedly, underground storage tanks (USTs) were never used at the Site. Three above ground storage tanks (ASTs) - two 10,000-gallon (ASTs) and one 20,000-gallon AST - were used to store diesel fuel for company trucks. The tanks were reportedly cleaned out in 1985 and have since been out of service. The three tanks are enclosed by a spill containment wall. The tanks were reportedly constructed in 1968 and the containment was present before 1980, although the date the containment was added could not be determined. The three above ground tanks are located at the northeast end of the former manufacturing area as shown on Figure 1-2. A 500-gallon AST and a 750-gallon AST are presently used for diesel fuel and gasoline, respectively, to fuel on-site vehicles. The 750-gallon gasoline tank is enclosed within a spill containment wall and pad. The 500-gallon tank has no secondary containment. Propane, which is used to power forklifts, is stored in a 2,000-gallon tank. The diesel tank and the propane tank are located side by side near the waste water treatment building. The gasoline tank was located near the office building.

A leak in a valve of one of the now out-of-service diesel tanks occurred around 1983, resulting in a spill outside of the containment wall. A portion of the spill flowed along the drainage ditch located north of the refining area. The contaminated soil was excavated and the tanks were emptied.

Although documentation of the spill and subsequent response action is not available, the soil cleanup was reportedly conducted under state supervision.

2.4 REGULATORY HISTORY

2.4.1 RCRA

As stated above, following the promulgation of RCRA, the facility submitted a Part A RCRA permit application. On November 19, 1980 the facility was granted Interim Status as a hazardous waste treatment, storage and disposal facility. The RCRA Subtitle C units included indoor and outdoor waste piles (used to store batteries and lead-bearing wastes) and the 750,000 gallon lined lagoon. A Part B application was submitted during the mid-1980s, although full RCRA permitted status was never granted.

RMC submitted a revised Part A application on October 26, 1988 requesting an increase in the storage volume for spent batteries from 200 cubic yards (cy) to 400 cy on September 20, 1989. A subsequent revised Part A application was submitted to Indiana Department of Environmental Management (IDEM) on December 7, 1990 for increasing the storage volume of spent batteries from 400 cy to 500 cy. IDEM denied the increase. RMC filed for a stay and was granted interim status to store 400 cy. IDEM approved the revised Part A application on June 3, 1991, with the provision that it did not grant interim status under RCRA. The Part B application was not resubmitted. In 1994, the facility withdrew its Part A and Part B permit applications.

Facility records indicate that state RCRA inspections were performed at the facility on the following dates:

- February 26, 1982;
- July 13, 1984;
- June 18, 1985;
- June 24, 1986;
- July 1, 1986;
- August 12, 1987;
- September 8, 1988;
- November 16, 1988;
- June 2, 1989;
- September 29, 1989;
- March 28, 1991;
- April 4, 1991;
- June 29, 1992; and
- March 23, 1993.

The June 29, 1992 RCRA Compliance Evaluation Inspection was conducted by Ontario Environmental, Inc. on behalf of IDEM. No documentation could be found for an annual inspection during 1983 or since 1993.

The state inspection reports typically noted operating and housekeeping type RCRA deficiencies. Copies of available reports are provided as Attachment 1 to this document.

The following enforcement actions were identified:

- Notice of Violation April 13, 1982;
- Notice of Violation July 30, 1982;

- Complaint Order (N-283) December 13, 1985;
- Notice of Violation (V-442) February 16, 1987; and
- Letter of Warning March 26, 1987.

The IDEM issued a draft Agreed Order addressing deficiencies in 1989. Deficiencies identified included:

- Spills had occurred in the baghouse area (the nature of the spillage was not identified).

- Scrap had been stored in waste piles without run-on, runoff, or wind dispersal control, and wastewater from dust control had been allowed to overflow from the drainage system to a ditch that flowed off-site.

- Waste slag had not been analyzed to determine if it was hazardous.

- The inspection and documentation program for security devices, spills, and equipment was deficient.

- The emergency response, contingency plan, and training programs were deficient.

RMC responded to the draft Order in October 1989, and requested modifications to indicate that many of the deficiencies identified had been implemented. IDEM issued a revised Agreed Order to RMC on September 4, 1990. The revised Order contained several of the items which RMC protested in the original draft Order. RMC did not sign the order, but completed the following actions to comply with the draft order:

- The furnace slag was analyzed and determined to be non-hazardous. Subsequent analysis for metals using the toxicity characteristic leaching procedure (TCLP) for leachability determined that the material contained hazardous concentrations of lead.

- The parking areas and building floors were covered with a 6-inch thick concrete pad. Storm water runoff from potentially contaminated areas was contained and was pumped to the wastewater treatment system via three 10,000-gallon sumps that were constructed in 1988. In 1989, the concrete-lined storm water pond was pumped out and the sediment was removed and processed in the blast furnace. After cleaning, the concrete surface in the pond was coated with a sealant and covered with a heavy vinyl plastic geomembrane liner.

RMC believed that all of the deficiencies identified in the draft Order were corrected. However, IDEM did not comment on the documents related to the improvements. Negotiations with IDEM concerning the Order were suspended when the EPA filed a complaint in federal court against the RMC facility on November 21, 1990. The complaint requested the court to order RMC to cease its operations as a hazardous waste treatment, storage, and disposal facility, to submit a closure plan, prepare and implement a plan to investigate the nature and extent of hazardous waste constituents released from the facility and the effects on groundwater, to prepare a plan for remediation of contamination in and around the facility, and to pay a fine for each violation. The complaint indicates that the EPA had issued a "Determination of Release of Hazardous Waste into the Environment from a RCRA Interim Status Facility" on or about May 5, 1989. Negotiations ensued between RMC and the EPA concerning the deficiencies. A draft Consent Decree was also being negotiated. This RFI Work Plan is being submitted under the requirements of the Consent Decree (Civil Action #IP902077C, lodged on July 14, 1998).

Soil samples were reported to have been collected and analyzed by the EPA. The samples reportedly failed EP Toxicity tests for lead and cadmium. The date of the sampling and the locations where the soil samples were collected from could not be determined.

The EPA maintains that interim status was lost on November 8, 1985 as a result of RMC's alleged failure to comply with Section 3005 (e)(2) of RCRA, 42 U.S.C. 6925 (e)(2); RMC does not agree with this allegation.

2.4.2 CERCLA

A site inspection was performed under the Comprehensive Environmental Response, Compensation, and Liability Act (CERCLA) in 1980. In 1985 a preliminary assessment was performed under CERCLA. No further action was planned under CERCLA at that time.

2.4.3 State and Local Permits

Waste Water Discharge Permit

A City of Indianapolis Permit to Discharge Waste Water to the Municipal Sewer System (Permit #334103) was issues on May 1, 1993. On January 6, 1994, Refined Metals was informed that they were no longer required to sample for pH, arsenic, lead, zinc, and antimony, and a monthly self-monitoring report was no longer required under their permit to discharge waste water.

Air Permits

The Beech Grove facility originally had ten certificates of operation No. 08025 through 08034 for its seven refinery kettles and three baghouses (M-1 through M-3). The permits were issued by the Air Pollution Control Section of the City of Indianapolis Department of Public Works.

RMC received approval for a fugitive dust control program from the City on July 15, 1991.

Installation Permit (#910036-01) was issued by the City of Indianapolis on September 11, 1991 for a total enclosure building to house the blast and dust furnace which were vented to a new baghouse,

M-4. The seven refinery kettles were also vented through baghouse M-4. The allowable emissions of lead were 0.30 pounds per hour (lb/hr).

An Installation Permit (950036-01) was issued on May 22, 1995 to install a natural gas-fired after burner and scrubber to baghouse M-1. The allowable emissions were as follows:

Total suspended particles - 0.003 gr/dscf, or 2.8 ton/yr
Lead - 0.91 lb/hr, or 3.99 ton/yr
Sulfate - 64.8 lb/hr, 283.82 ton/yr, or 10.8 lb sulfate/ton of material discharged.

The Indianapolis Air Pollution Control Section granted an Operating Permit on August 26, 1994 for fuel combustion - gas, oil, blast furnace, secondary lead smelter, dust furnace, blast furnace, metallurical baghouse (M-1), blast furnace sanitary baghouse (M-2), sanitary baghouse (M-4, and refinery sanitary baghouse (M-3).

The City of Indianapolis granted an Operating Permit, facility number 0036 on January 12, 1995 for the following:

0036-01	M-1	Allowable: Total suspended particulate - 0.003 gr/dscf, 2.8 ton/yr Lead - 0.91 lb/hr, 3.99 ton/yr Sulfate 64.8 lb/hr
0036-02	M-2	Allowable: Total suspended particulate - 0.0005 gr/dscf, <1 ton/yr Lead - 0.015 lb/hr, 0.66 ton/yr
0036-03	M-3	Allowable: Total suspended particulate - 0.03 gr/dscf Lead - 0.015 lb/hr, 0.66 ton/yr
0036-04	M-4	Allowable: Total suspended particulate - 0.03 gr/dscf

Lead - 0.3 lb/hr, 1.31 ton/yr

On January 10, 1995, RMC entered into an Agreed Order with IDEM to address Clean Air Act violations.

A revised Construction Permit (950036-01) for M-1 afterburner and scrubber was granted on May 23, 1995.

Table 2-1
List of Material Used
Refined Metals Facility
Beech Grove, Indiana

Material	Use
Lead batteries and scrap	Raw material for refining
Coke	Furnace fuel
Oxygen	Furnace oxidant
Natural gas	Furnace fuel
Antimony	Alloys added to lead
Tin	Alloys added to lead
Sodium hydroxide	Removal of antimony and tin in refining kettles
Red phosphorus	Removal of copper from refining kettles
Scrap iron	Furnace additive to remove sulfur
Mangensium hydroxide	Wastewater neutralization and flocculent
Polymers and chelating agents	Wastewater treatment
Muriatic (hydrochloric) acid	Cleaning wastewater filter press
Lime and sodium bicarbonate	Neutralizing spills

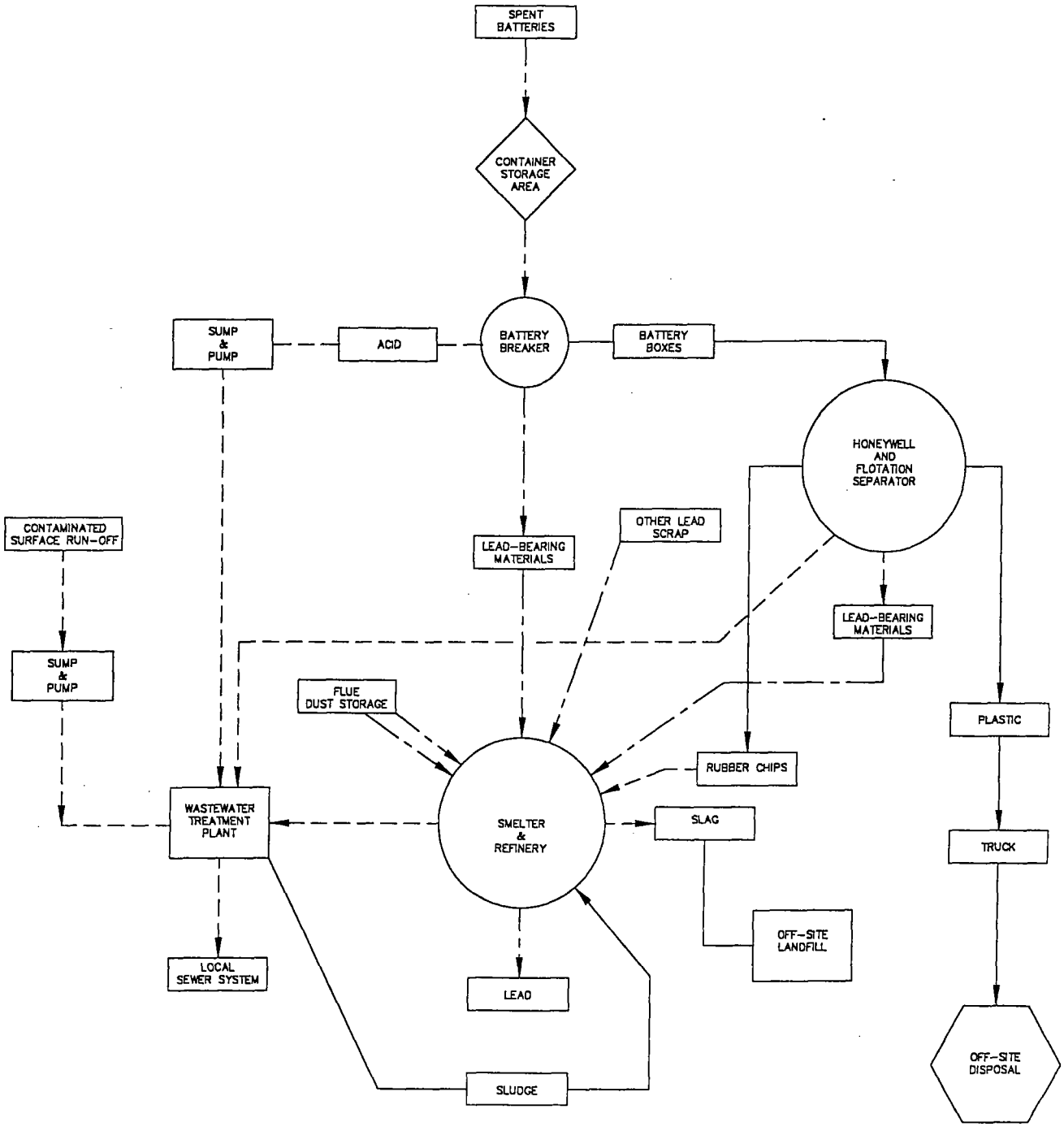

LEGEND

- MATERIAL FLOW
- LIQUID WASTE FLOW
- SOLID WASTE FLOW
- MATERIALS
- PROCESSES
- REGULATED FACILITY
- REMOVAL FROM PLANT PROPERTY

Date: 8/7/98	PROCESS FLOW DIAGRAM
Scale: N.T.S.	
Drawn By: P.S.G.	
Checked By: E.M.G.	Advanced GeoServices Corp. Chadds Ford Business Campus, Rts. 202 & 1 Brandywine One, Suite 202 Chadds Ford, Pennsylvania 19317
Project Mgr: E.M.G.	
Dwg No. 98478-15	
Issued: AUG 2 1999	Project No. 98-478-01 — FIGURE: 2-1

J:\REFINED METALS\DRAWINGS\9847801\98478-15

3.0 SITE SETTING

3.1 PHYSIOGRAPHIC SETTING

The Site is situated within the Central Lowland Physiographic Province of the Interior Plains (Fenneman, 1917, revised 1928). The landforms observed in the region are a result of the last major glaciation of central Indiana (Champaign). Ninety to 100 cubic miles of ice covered the county during the Champaign advance of the East White sublobe, approximately 20,000 years ago. The Champaign ice deposited a 1 to 50 foot-thick layer of drift when it melted. Major valleys in Marion County were formed by streams of melt water flowing in ice-walled channels. Numerous minor valleys originated when streams flowing parallel to decaying ice margins cut into the drift. About 80 percent of the surface of Marion County consists of hummocky moraine of low relief (0 to 10 feet), which exhibits closed ice-disintegration ridges, till hummocks, kames, and linear ridges. Outwash plains and terraces constitute about 15 percent of the surface in Marion County, and postglacial alluvium covers the remaining 5 percent of the surface (Harrison, 1963).

3.2 TOPOGRAPHIC SETTING

The Site is located in the Mississippi River Drainage Basin. The Site is situated on a minor local topographic high with a surface elevation of approximately 845 feet mean sea level (msl). The surface elevation slopes gently to the southeast toward Sloan Ditch; the northwestern perimeter of the Site slopes to the northwest toward the intermittent headwaters of Beech Creek. Figure 3-1 shows the Site surface waters. Surface water at the Site is collected in the storm water management basin which, as discussed in Section 2.0, is treated and discharged to the municipal sewer system.

Prior to construction of the stormwater management basin, surface water from the northern portion of the facility flowed to the intermittent stream that flows northwest to the headwaters of Beech Creek. Surface water from other areas on the site historically flowed to a depression (former impoundment) at the same location as the present-day stormwater basin. Water collected in this

impoundment either evaporated, or when full, overflowed the banks to a drainage ditch that flowed off-site to the east (Figure 3-1) and then to the south, and eventually discharged to Sloan Ditch. Sloan Ditch flows 0.6 mile west-southwest to Churchman Creek which flows to the west 0.9 mile and discharges to Beech Creek. Beech Creek flows 1.2 miles to the southwest to Lick Creek, which then flows 7 miles to the White River.

An area of soil piles is located in the northeastern portion of the Site, between the manufacturing area and Arlington Avenue. The piles appear to be from past earthmoving activities and are covered with small trees and vegetation.

3.3 SURROUNDING LAND USE

The Site is surrounded by several different land uses. Figure 3-1 shows the surrounding land use, zoning, and property owners. A railroad spur is located north of the Site and a refrigerated warehouse (United Refrigerated Services Inc.) is located across the railroad tracks. A Firestone facility which manufactures roofing materials is located east of the Site across Arlington Avenue. A vacant commercial building is also located to the east, and homes and farmland are located northeast of the railroad spur. A mixture of vacant and industrial properties lie to the south of the Site, including Wavetech circuit breaker plant, Universal Machine and Tool Works, and various warehouses. The Beech Grove High School is located 0.75 mile southwest of the Site. A Citizens Gas storage facility and pipeline are located northwest of the Site, and a railroad yard and repair facility for Conrail and Amtrak are located beyond Citizens Gas toward the northwest.

The following facilities, located within a 0.5 mile radius of the Site, are listed on CERCLIS:

1. Holcomb & Hoke Manufacturing Co., Inc., 1545 Van Buren Street;
2. Glass Containers Corp., 1301 2. Keystone Avenue;
3. Keer-McGee Chem Corp-Forest Pro Division, 1450 South Earhart Street;
4. Emerson Avenue Landfill, 2700 S. Emerson Avenue;
5. No Name, 4300 West Southport Road;

6. Indiana Farm Bureau Co-op, 1901 S. Shemann Drive; and
7. Anchor Galvanizing, 3300 Prospect Avenue.

A former production well is located on-site as shown on Figure 1-2. Specific details on the well construction is not known. Residential wells were located through the Marion County Health Department. One residential well is reportedly located within 0.5 mile of the site, and eight residential wells are reportedly located within one mile of the site. Table 3-1 and Figure 3-2 provide the locations of the wells.

3.4 REGIONAL GEOLOGY

The surficial geology of Marion County is glacial till (Tipton Till Plain) consisting of yellowish gray, bluish gray, or gray sand or silt with some clay and pebbles and scattered cobbles and boulders. The drift cover in Marion County is believed to be composed of three drift sheets resulting from the Kansan, Illinoian, and Wisconsin glaciations. Thicknesses range from less than 15 feet to greater than 400 feet of till. The Site is underlain by approximately 200 feet of unconsolidated material. Well logs from five site monitoring wells indicate 13 to 20 feet of silty clay with some sand and gravel, followed by 8 to 10 feet of clayey sand and silt with some gravel. Three of the wells were completed in 1.5 to 4 feet of clay. MW-5 was completed above the depth where the clay would have been encountered. One well (MW-1) encountered approximately 9 feet of sand below the silty clay.

Bedrock is encountered at an elevation of approximately 640 feet mean sea level (on the order of 200 feet bgs), and consists of middle Devonian-aged dolomitic limestones. The limestones consist primarily of the Geneva Dolomite and the Jefferson Limestone. The Geneva Dolomite is a light gray to tan and buff to chocolate brown dolomite that contains white crystalline calcite masses. The Jeffersonville Limestone is an almost pure limestone in the upper portion of the formation, and is laminated with organic material in the lower portion. The organic laminae are more argillaceaous than the coralline zone (Harrison, 1963). Meyer, 1975 indicates that shale is present beneath the

glacial till and overlying the limestones. Additional detail on the shale unit is not provided by Meyer. The regional dip is to the southwest.

3.5 HYDROGEOLOGY

3.5.1 Regional Hydrogeology

In Marion County, groundwater is encountered in sand and gravel beds overlying the bedrock, the Jefferson Limestone and Geneva Dolomite, and the Niagaran Limestones (Harrison, 1963). The sand and gravel glacial outwash that coincides with the courses of the White River and Fall Creek is the aquifer of greatest economic importance in Marion County. The location of this aquifer generally coincides with the glacial melt water and outwash deposits along the major streams. Fall Creek enters White River upstream of the Site. The White River sand and gravel aquifer is located approximately 5.3 miles west of the Site. The sand and gravel aquifer is unconfined and flows toward and discharges to the surface water bodies. The hydraulic conductivity was determined for sand, sand and gravel, and gravel in Meyer, 1975 and are as follows:

Sand	40 ft/day
Sand and Gravel	240 ft/day
Gravel	415 ft/day

The hydraulic conductivity of the silt and clay was determined to be too low to be reported in Meyer's report. Specific capacity and lithologic information used in the hydraulic conductivity calculations were obtained from drillers' records.

Three thin, areally discontinuous sheet-like deposits of sand and gravel in the till-plain area are separated by beds of silt and clay which causes the groundwater in these deposits to be semi-confined. The elevation of the uppermost semi-confined aquifer beneath the Site is approximately 720 ft msl (approximately 120 feet bgs); groundwater flow in the uppermost regional semi-confined

aquifer is to the northwest. The middle regional semi-confined aquifer is not mapped beneath the Site because an aquitard (clay unit) is mapped in the area. The elevation of the lower regional semi-confined aquifer beneath the Site is approximately 660 ft msl (180 ft bgs), and flow is to the southeast.

The average daily industrial and municipal groundwater pumpage for Marion County is 28.95 million gallons per day (mgpd). Less than 20 percent of the industrial/municipal pumpage is from the bedrock. Also, less than 20 percent of the total pumpage is obtained outside the unconfined glacial-outwash aquifer, which occurs only along the White River and Fall Creek located at least 5.3 miles west of the Site. The major centers of groundwater pumpage occurred within approximately one mile of a major stream. The estimated total domestic groundwater pumpage is 9.0 to 11.0 mgpd.

3.5.2 Site Hydrogeology

Little site-specific hydrogeologic information is available. Five monitoring wells were installed at the site in 1990. Lithologic descriptions were obtained from the monitoring well lithologic logs (Attachment 2); however, water level elevations (depth-to-water measurements and monitoring well elevations) were not available and therefore are not discussed here, and water level contours could not be constructed. According to previous studies, groundwater at the Site is encountered at a depth of approximately 10 feet below the ground surface and flows to the southeast. As stated above, the sand and gravel outwash aquifer is located about 5.3 miles west of the Site along the White River, and the uppermost semi-confined aquifer is encountered below the Site at a depth of about 120 feet. The uppermost semi-confined aquifer flows to the northwest; according to ESC, groundwater at the Site flows to the southeast. Therefore, groundwater encountered at the Site is a local perched zone of saturation in the glacial till which does not appear to follow the regional flow patterns and does not appear to be connected to regional aquifers.

Monitoring wells at the site are screened in 7 to 10 feet of clayey sand and silt. The bottoms of monitoring wells MW-2, MW-3, and MW-4 are all completed in 1.5 to 4 feet of clay. MW-5 was

screened above the depth where clay should have been encountered. MW-1 was the only monitoring well that encountered sand. Since the majority of the monitoring wells are completed in clay, the perched aquifer appears to be less than 10 feet in thickness.

Wells MW-1 and MW-2 were identified by ESC as upgradient wells. Since well elevations and depth-to-water measurements are not available, AGC will not specify upgradient wells until a preliminary evaluation of the well network is complete. Wells were sampled on a quarterly basis since June 1991. Monitoring well lithologic and construction logs are provided in Attachment 2.

3.6 ECOLOGICAL SETTING

A site visit was conducted on May 7, 1998 by representatives of Advanced GeoServices Corp. to determine the ecological setting of the Site. In conjunction with the site visit, information regarding species and habitats of concern was requested from the United States Department of the Interior - Fish and Wildlife Service, and the Indiana Department of Natural Resources. No threatened or endangered species have been observed within a one-mile radius of the Site.

Preliminary identification of habitat types was made during a thorough field traverse of the study area. The purpose of the habitat delineation and characterization conducted during the study was to identify, map, and characterize the limited wildlife habitats present at the Site. Habitat information is used in addressing general ecological risks, identifying potentially sensitive wildlife communities, and defining the scope of future studies, if necessary. Delineation of habitat units was based on five primary factors observed during a site visit conducted on May 7, 1998: vegetative community, hydrology, cover type, landform and slope, and observed wildlife usage. Each identified habitat type was mapped according to its associated Anderson land use classification. Habitat community forms document these observations. The following major habitat types, shown on Figure 3-3, were identified at the Site:

- Young Deciduous Forest
- Rangeland
- Unnatural wetlands (emergent and unconsolidated bottom)

Each is described briefly as follows:

Forested

Deciduous forest occurs on the northern corner of the Site, as well as, in small patches on the south side in hedgerow-shaped areas. Areas designated as 415 (deciduous forest land, shrub layer moderate to dense) are composed of a mature mesic forest community. Dominant overstory species consist largely of white ash (*Fraxinus americanus*) and box elder (*Acer negundo*). The understory can be dense and consists of roughleaf dogwood (*Cornus drummondi*) and black raspberry (*Rubus occidentalis*). Herbaceous vegetation consists of unidentified grass species, unidentified goldenrod species (*Solidago* and *Euthamia* sp.), garlic mustard (*Alliaria officianalis*), virginia waterleaf (*Hydrophyllum virginianum*), golden alexanders (*Zizea aurea*) and wild madder (*Galium mollugo*). The field visit was performed during a period of very heavy rainfall, during an extremely wet spring. Small areas of temporary ponding were noted, but were not associated with permanent wetland conditions.

Rangeland

Areas of rangeland are designated as 311, herbaceous rangeland - mowed. Dominant covers are grass sp. and wild strawberry (*Fragaria virginiana*); the area is mowed frequently. Fencelines are vegetated with various weedy species, including Queen Anne's lace (*Daucous carota*), unidentified goldenrod species (*Solidago* and *Euthamia* sp.), unidentified joe-pye weed (*Eupatorium* sp.), unidentified grass species, poison ivy (*Toxicodensron radicans*), roughleaved dogwood (*Cornus drummondi*), white mulberry (*Morus alba*), and choke cherry (*Prunus virginiana*).

Unnatural Wetlands

National Wetlands Inventory map for the Site shows one wetland identified on the Site; it is the lined stormwater pond and it is classified as palustrine, unconsolidated bottom, intermittently exposed, diked/impounded (Figure 3-1). The impoundment is lined, and is unvegetated within the pond itself. The pond margin is mowed herbaceous rangeland. The additional wetland area on the Site identified during the site visit is termed "unnatural"; it is dependent upon receiving road drainage. Road drainage flows onto the site and is blocked at the fenceline, creating a temporary ponded area during periods of heavy rainfall. The area is small, less than one-tenth of an acre, and is not a historical wetland area. It is dominated by cattail (*Typha latifolia*), with areas of wool grass (*Scirpus cyperinus*) and unidentified grass species. A red-winged blackbird (*Agelaius phoenicius*) was observed during the site visit.

It should be noted that none of the following were observed during the detailed on-site evaluation:

- signs of stressed or dead vegetation;
- discolored soil, sediment, or water (i.e., a sheen);
- presence of non-native materials in sediments resulting from seeps or other discharges emanating from the subject site;
- presence of deformed organisms (if encountered);
- presence of exceptional value wetlands; and
- presence of federally designated threatened or endangered species.

The proposed site-wide grid system for soil sampling and the sediment sampling program include sampling locations in each of the three major habitat types on-site, including the unnatural wetlands. The validated data obtained for each habitat type will be used to quantify risk to ecological receptors associated with the habitat, if applicable (i.e., if target decision levels are exceeded (see Appendix B)).

Table 3-1
Residential Wells within One Mile
Refined Metals Corporation
Beech Grove, Indiana

Well Number	Address
1	non-responsive
2	non-responsive
3	non-responsive
4	non-responsive
5	non-responsive
6	non-responsive
7	non-responsive
8	non-responsive
9	non-responsive

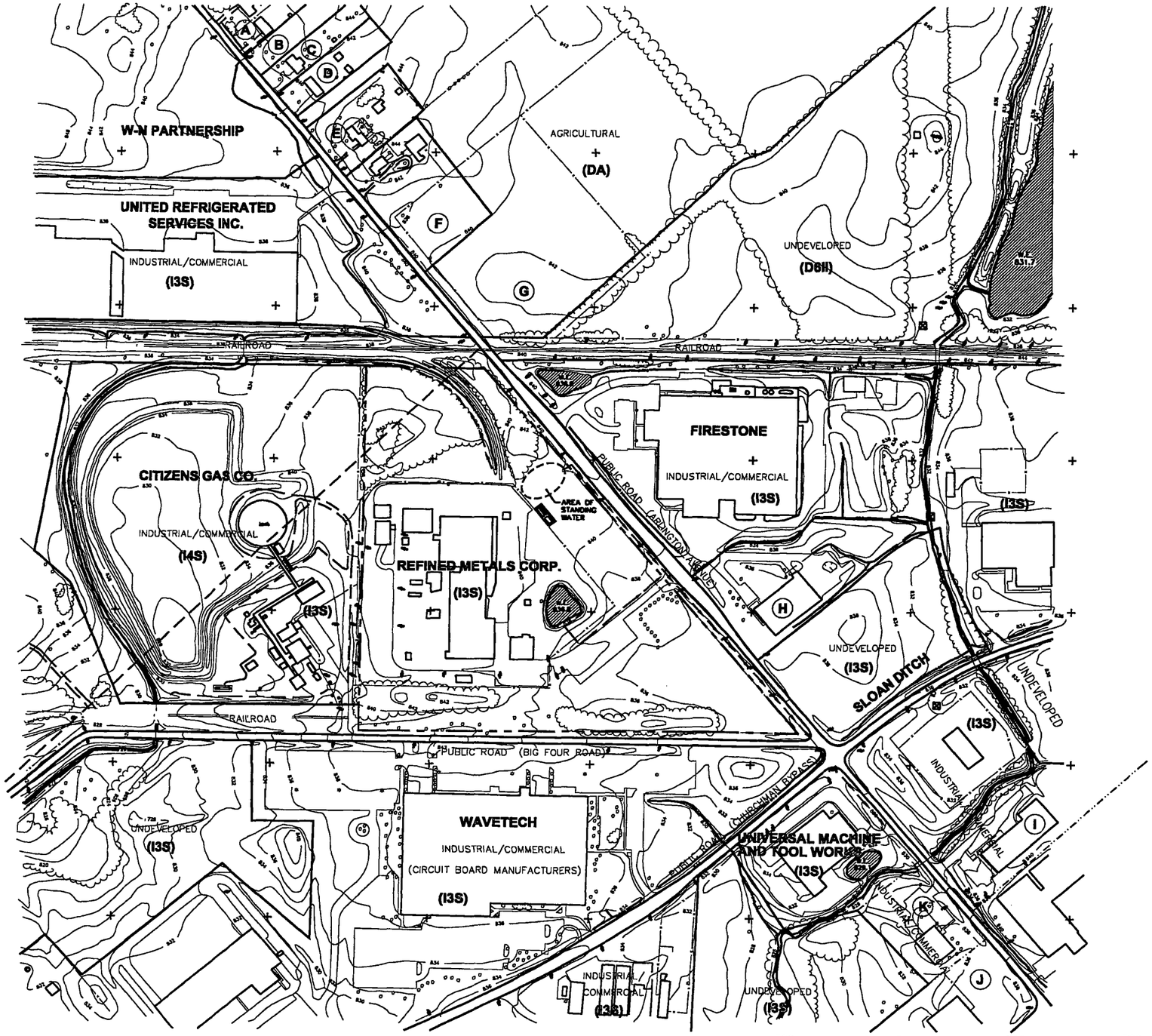

LEGEND:

- SURFACE WATERS
- TEN FOOT CONTOUR LINE
- SURFACE WATER
- RMC SITE PROPERTY BOUNDARY
- DELINEATES CURRENT LAND USE/ TAX PARCEL BOUNDRY
- ZONING LINE

(DA)	DWELLING AGRICULTURAL DISTRICT
(D6II)	DWELLING
(I3S)	MEDIUM INDUSTRIAL SUBURBAN
(I4S)	HEAVY INDUSTRIAL SUBURBAN

ADJACENT AND NEARBY PROPERTY OWNERS (NOW OR FORMERLY)

A	ALICE M. JONES	PARCEL# 3005219
B	ALICE M. JONES	PARCEL# 3004136
C	DAVID M. PERDUE	PARCEL# 3004062
D	BILLY JOE CLINE	PARCEL# 3000935
E	RALPH H. LYONS	PARCEL# 3006274
F	KATHY HOWARD	PARCEL# 3002283
G	TODD EMERSON KIRKHAM	PARCEL# 3009884
H	CLAIR W. GOLAY	PARCEL# 3010276
I	NUMERICAL DEVELOPMENTS	PARCEL# 3009445
J	AUGUST J. MASCARI	PARCEL# 3005626
K	WAYNE MEYER	PARCEL# 3009067

REFINED METALS CORPORATION
RCRA FACILITY INVESTIGATION WORK PLAN

BEECHGROVE, INDIANA

Date: 7/24/98	SURFACE WATERS & SURROUNDING LAND USE
Scale: 1"=360'	
Drawn By: P.S.G.	Advanced GeoServices Corp. Chadds Ford Business Campus, Rts. 202 & 1 Brandywine One, Suite 202 Chadds Ford, Pennsylvania 19317
Checked By: P.G.S.	
Project Mgr: E.M.G.	
Dwg No. 98478-12	Project No. 98-478-01
Issued: MAR - 3 1999	FIGURE: 3-1

J:\REFINED METALS\DRAWINGS\9847801\98478-12

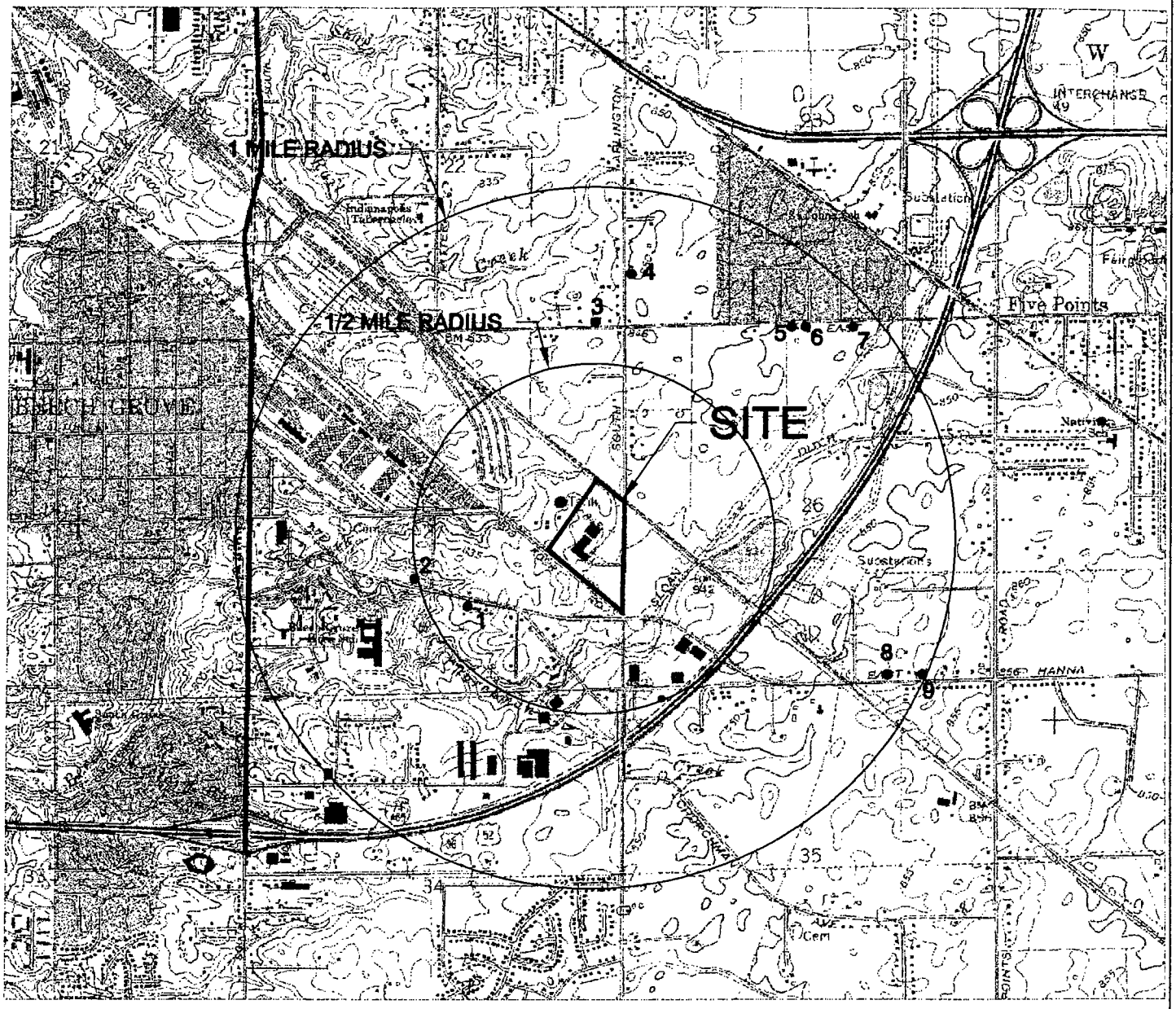

LEGEND

•1 RESIDENTIAL WELL LOCATION

REFINED METALS CORPORATION

BEECH GROVE, INDIANA

Date: 2/4/99	RESIDENTIAL WELLS WITHIN A ONE MILE RADIUS OF THE SITE
Scale: N.T.S.	
Drawn By: V.E.N.	
Checked By: E.M.G.	Advanced GeoServices Corp. Chadds Ford Business Campus, Rts. 202 & 1 Brandywine One, Suite 202 Chadds Ford, Pennsylvania 19317
Project Mgr: E.M.G.	
Dwg No. 98520-23	
Issued:	Project No. 98-520-00 — FIGURE: 3-2

J:\REFINED METALS\DRAWINGS\9852000\98520-23

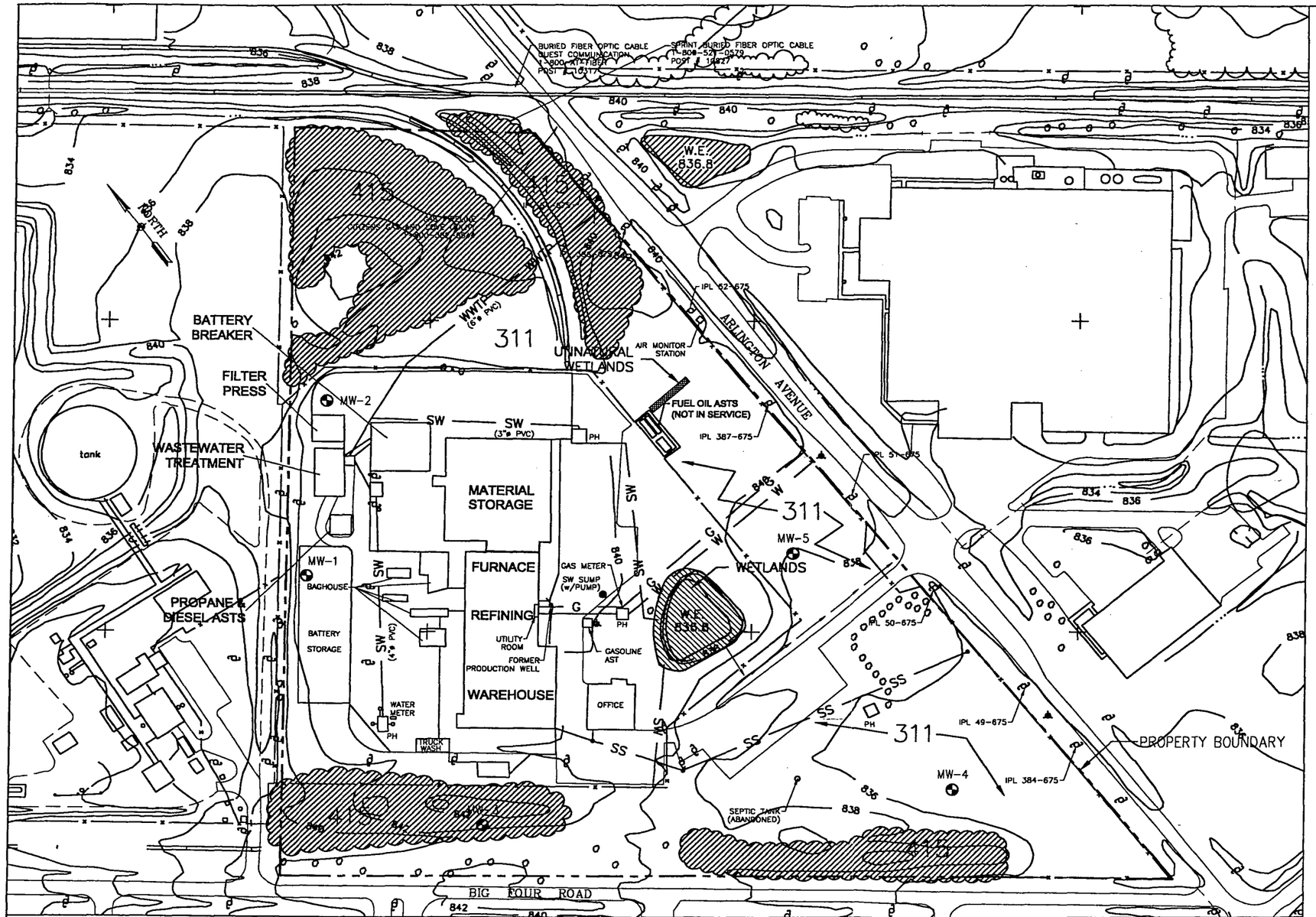

180 0 180 360

SCALE IN FEET

REFINED METALS CORPORATION
RCRA FACILITY INVESTIGATION WORK PLAN

BEECH GROVE, INDIANA

LEGEND

— G —	GAS	PH	PUMP HOUSE
— SS —	SANITARY SEWER	•	STORMWATER INLET
— SW —	STORMWATER SEWER	311	HERBACEOUS RANGELAND-MOWED
— WWTP —	6" PVC WASTE WATER TREATMENT LINE	415	DECIDUOUS FORESTLAND
— PW —	POND WATER LINE		
	FIRE HYDRANT		
	LIGHT POLE		
	MONITORING WELL		

NOTE: UTILITY LOCATIONS ARE APPROXIMATE BASED ON FIELD VISIT BY AGC. LOCATIONS HAVE NOT BEEN SURVEYED.

Date: 6/2/98	LOCATION OF MAJOR HABITAT TYPES ON-SITE
Scale: 1"=180'	
Drawn By: P.S.G.	Advanced GeoServices Corp.
Checked By: E.M.G.	Chadds Ford Business Campus, Rts. 202 & 1 Brandywine One, Suite 202 Chadds Ford, Pennsylvania 19317
Project Mgr: E.M.G.	
Dwg No. 98478-19	Project No. 98-478-01
Issued:	FIGURE: 3-3

J:\REFINED METALS\DRAWINGS\9847801\98478-19

4.0 NATURE AND EXTENT OF CONTAMINATION

4.1 BEHAVIOR OF LEAD

A number of the materials formally used at the facility have toxic characteristics, however; the principal material of concern is lead. Lead is a common metal. Lead can be found at an average concentration in excess of 30 ppm in natural soils and 1-10 ug/l in surface water. Most lead salts are fairly insoluble in water. The solubility depends on the pH, with solubility increasing in more acidic conditions. Movement of lead in soils depends on its adsorption, chelation with organic matter, and the precipitation of the less soluble salts. In general, lead reacts with soil anions or clays to form insoluble complexes, inhibiting its mobility. Lead can be ingested or absorbed by inhalation. Poisoning from acute exposure to lead is uncommon. The primary toxic effects from chronic exposure are on the blood and the nervous system.

4.2 DISCUSSION OF SOURCE AREAS

Facility inspection reports identified poor housekeeping, storage of materials on unpaved surfaces, spillage in a baghouse, and runoff/runon control for the outdoor waste piles as situations where contamination could be leaving the paved Site area. The facility also entered into an agreed Order with IDEM during January 1995 to address violations of the Clean Air Act.

Based on the documented operating history and an understanding of the character of lead mobility and transport, the most significant potential sources of contamination at the facility during its operating history were erosion and transport of lead-bearing solids from outdoor waste piles and other areas by stormwater runoff (prior to re-engineering of site drainage to contain all runoff from the manufacturing area); fugitive dust emissions from traffic and production areas, unpaved outdoor waste pile areas (north and west of the material storage building) and stack emissions. Based on original facility grading, transport and deposition of lead-bearing sediment from the facility could have occurred in areas northeast and east of the Battery Breaker building prior to containment of site

stormwater runoff and in the lined stormwater lagoon and the channels that received lagoon overflow after containment. In addition, those areas that were either unpaved or not covered by a building within the active manufacturing areas could represent an area where lead contaminated sediment or materials could have accumulated and were subsequently covered with pavement or a structure. The fugitive dust and stack emissions could have resulted in the deposition of lead on the ground surface within and beyond the manufacturing area.

Figure 4-1 is a wind rose constructed by ESC. Two off-site air monitors were monitored: one along the eastern fence line of the Site, and the other about 1,200 feet northeast of the manufacturing area. According to ESC's study, prevailing winds are predominantly from the south, southwest, and west.

Based on a review of facility records performed by AGC during May 1998, the RMC facility experienced a diesel fuel spill from the ASTs in the northeast corner of the manufacturing area during 1983. The fuel reportedly flowed along a small drainage channel toward the northeast. The tanks were emptied at the time of the incident. Conflicting reports were received regarding what clean-up was performed and the involvement of the state. Detailed documentation of state involvement could not be found on-site or in IDEM's files.

4.3 SUMMARY OF PREVIOUS SAMPLING ACTIVITIES

During the preparation of the RFI Work Plan, AGC performed a review of RMC files to identify previous sampling activities. Through that review it was determined that previous sampling of environmental media at the facility was limited to an investigation of soils and building interiors performed by ENTACT, Inc. during April 1996 and quarterly groundwater sampling performed since June 1991. Information and results for the soil samples collected by EPA, as referenced in the Consent Decree, could not be located. A discussion of the interior samples, soil samples and groundwater sampling activities and results are provided below.

4.4 INTERIOR SAMPLES

Samples of floor sweepings were collected from interior building floors and soil samples were collected from beneath building floors. The samples were analyzed in the field for lead using an XRF in April 1996 by ENTACT. A geoprobe unit was used to collect the samples from beneath the floors. Results of the sampling are discussed in greater detail below and are presented on Figures 4-2 through 4-4 and Tables 4-1 and 4-2.

4.4.1 Warehouse and Refining Building

Sampling in the warehouse and refining building found the highest concentrations of lead in the floor sweeping samples. The results ranged from 51,702 to 129,707 parts per million (ppm). Three samples were collected from 1 foot below ground surface (bgs); two of the three samples were below the detection limit for lead. The third had a result of 2,950 ppm. One sample collected from 2 feet bgs, and beneath the 1 foot deep sample with a lead concentration of 2,950 ppm, had a lead concentration of 28 ppm. One sample collected from 4 feet bgs detected lead at 36 ppm. It therefore appears that lead has not leached into subsurface soil beneath the warehouse and refining building.

4.4.2 Furnace Room Samples

Various parts of the room, in particular the storage cells in the northeast corner of the room, have been repaved over time. Two floor sweeping samples collected in the furnace room had lead concentrations of 10,073 and 58,570 ppm. Two soil samples collected from 1 foot bgs indicated non-detectable lead concentrations and 39 ppm. Two samples were also collected from 4 feet bgs in the furnace room; those results ranged were non-detectable and 57 ppm for soil lead.

4.4.3 Material Storage Area

Samples of floor sweepings (four) from the material storage area ranged in concentrations of lead from 81,220 to 115,736 ppm. Four out of five samples collected from 1 foot bgs ranged from non-detectable to 397 ppm; the fifth sample (M1) had a lead concentration of 75,373 ppm. Samples were collected below the highest concentration occurring at 1-foot (75,373 ppm) at 2 and 8 feet bgs and indicated results of 405 and 173 ppm, respectively. Four additional samples collected at 4 feet bgs had soil lead concentrations between non-detectable and 93 ppm. The floor of the material storage area is badly deteriorated. However, soil contamination was below 500 ppm at depths of greater than 1 foot.

4.4.4 Battery Breaker Building

Surficial samples (three) collected from the battery breaker building detected concentrations of lead ranging from 24,081 to 85,707 ppm. The concrete floor was noted to be deteriorated during a site visit by AGC. ENTACT collected one sample from 1 foot bgs and one sample from 4 feet bgs the results were lead at 53 ppm and 30 ppm, respectively.

4.5 EXTERIOR SOIL SAMPLES

During their investigation, ENTACT focused soil sampling efforts on four areas including:

Area 1) The visible former battery casing storage area on the northwest side of the Site behind the baghouses;

Area 2) The areas around the baghouses and material storage building that were unpaved until the late 1980s or early 1990s;

Area 3) Grassy areas surrounding the wastewater treatment lagoon; and

Area 4) The grassy and wooded areas between the interior and perimeter fences.

Surface soil samples collected from outside of the buildings ranged from 43 mg/kg to 70,406 mg/kg. Figure 4-5 shows the distribution of lead in surface soil. Subsurface samples (4" to 12") ranged from non-detectable to 22,793 mg/kg (Figure 4-5), and samples collected from 24" to 48" ranged from non-detectable to 2,021 mg/kg (Figure 4-6). Two samples were collected from 3 feet bgs, and four samples were collected from 4 feet bgs. Samples collected from 3 feet bgs did not detect lead; and samples collected from 4 feet bgs had results ranging from non-detectable to 87 ppm. The highest concentrations are located within the former active manufacturing areas of the Site. The areal size of contaminated soil decreases with depth as shown on Figures 4-6 through 4-7. The analytical results are summarized on Table 4-3.

4.6 GROUNDWATER

Groundwater samples were collected on a fairly consistent quarterly basis from June 1991 through March 1997. Samples were analyzed for total and dissolved antimony, arsenic, cadmium, lead, and sulfate, pH, conductivity, and turbidity. The analytical results are provided in Attachment 3. In general, concentrations of metals in filtered groundwater are below the corresponding MCL or action level. The action level for lead (0.015 mg/l) was exceeded in unfiltered samples collected from MW-2 on June 12, 1991 (0.021 mg/l) and September 30, 1992 (0.022 mg/l). One filtered sample collected from MW-2 on September 17, 1996 indicated a concentration of 0.042 mg/l; however, this sample result may be a discrepancy since the result from the unfiltered sample collected on that date from that well was less than the filtered sample and did not exceed the action level. An unfiltered sample collected from MW-3 on December 27, 1996 indicated a concentration of 0.016 mg/l of lead. The MCL for arsenic (0.05 mg/l) was exceeded in a sample from MW-3 on March 27, 1992 (0.17 mg/l), and was exceeded slightly in MW-5 on June 13, 1992 (0.057 mg/l). Monitoring well MW-4 did not detect metals above the MCLs.

In summary, total lead and arsenic have been detected in groundwater; dissolved lead was detected in only one sample, which appeared to be a discrepancy. Therefore, where detected, metals in groundwater appear to be more representative of suspended solids, rather than the concentration actually dissolved in groundwater. Previous groundwater samples were not collected using the USEPA low-flow sampling technique (see Section 5.2.2).

4.7 SURFACE WATER

Under present controls, the risks of adverse impacts on surface water are not considered a significant concern. The majority of the Site is covered with concrete and buildings. The concrete surfaces are designed to contain all stormwater for treatment and discharge to the sanitary sewer.

None of the waste water tanks at the facility has individual spill containment structures. However, if a tank ruptured, a large portion of the water could be contained within a sump located inside the treatment building and the remainder would flow into the center of the Site, where it would be captured and contained in the stormwater sumps.

Before stormwater improvements in 1988, stormwater runoff flowed to the surface lagoon on the eastern side of the Site, although a portion also flowed off-site in a ditch that runs northwest to Beech Creek. There may be residual lead contamination in the drainage ditch from stormwater runoff. Almost all of the lead utilized on-site would have been relatively insoluble, so that any lead material washed off-site would have been relatively insoluble and would have likely readily settled out into the sediments.

4.8 AIR

When the facility was in operation, the primary air emissions at the Site were lead, particulates, and sulfur dioxide. Other emissions were from burning natural gas and odors from battery crushing. Equipment modifications installed in late 1992 and building sealing activities performed in 1994

reduced downwind airborne lead concentrations to below the federal ambient lead standard of 1.5 $\mu g/m^3$. In 1993, the federal standard was met for the last three quarters. Data for 1994 and 1995 indicate that the facility has been in compliance for the last two quarters of 1994 and 1995. Since 1996, the facility was in compliance with the federal standard. Air emissions are no longer believed to represent a potential pathway because the facility is inactive.

4.9 SOLID WASTE MANAGEMENT UNITS

4.9.1 Outdoor Waste Piles

At the present time the Outdoor Waste Piles are gone. The paved exterior surface areas can be described as broom clean with only a few isolated low spots where small amounts of sediment have accumulated. These areas are within the portions of the facility where stormwater runoff is collected and treated.

A limited amount of broken plastic battery casings were found in an unpaved area along the northwest side of the property. This area has a poor vegetative cover. Drainage from the area is poorly defined and may, during extreme rainfall events, be a source of runoff to the adjacent off-site area.

4.9.2 Indoor Waste Piles

The indoor waste piles were located within the Material Storage Building. The piles have been removed and the building sidewalls sealed except for the internal doorway that leads to the furnace building. Dust and dirt (presumably former furnace feed material) remains on the floor with up to several inches in some areas. The floor was noted to be in fair to poor condition, with reinforcing steel exposed in several areas. The roof was experiencing minor leaking. There were no signs that the dust and dirt on the floor was leaving the building.

4.9.3 Lined Lagoon

The lined stormwater lagoon was reportedly last cleaned out during 1996. RMC continues to operate the lagoon for the purpose of managing stormwater runoff which is ultimately treated through the waste water treatment system. Limited amounts of sediment appear to have accumulated since the last cleaning and cattails are growing in the bottom. An RMC representative at the Site reported that the lagoon is managed to prevent overtopping and the subsequent discharge to off-site surface drainage features.

4.10 POTENTIAL HUMAN EXPOSURE

RMC is located in an area of mixed land use. Vacant land, a railroad spur, and a refrigerated warehouse are located north of the facility. More vacant land is beyond. Several homes and farmland are located to the northeast of the railroad spur. The Firestone facility that manufactures roofing materials and a vacant commercial building are located to the east. Vacant land and a number of industrial properties, including a Wavetech circuit breaker plant, Universal Machine and Tool Works, and various warehouses are south of the Site.

Immediately northwest of the Site is a Citizens Gas storage facility and pipeline. A major railroad yard and repair facility for Conrail and Amtrak railroad cars is farther northwest of the Site. Downtown Beech Grove is located 1 mile to the northeast of RMC.

The risk of acute environmental exposure to persons at the facility and on adjacent properties is believed to be low. Although elevated concentrations of lead or other metals may be present in Site soils and dusts, there are no human receptors currently on-site. Groundwater samples show little or no evidence of dissolved, mobile contamination. In addition, there is no evidence of individuals trespassing or using the wooded and open grounds in the immediate vicinity of the facility. Therefore, no interim measures are believed necessary at this time to protect human health.

All validated data obtained in the RFI will be used to quantify human health risks to current and potential future receptors. Data will be organized into appropriate exposure units associated with each sensitive subpopulation. The selection of exposure units, the identification of receptors, and the quantification of risks will be documented in the Human Health Risk Assessment proceeding RFI activities.

Table 4-1
Analytical Results of Lead in Interior Floor Samples
Analyzed using an XRF by ENTACT, April 1996

Sample Number	Results (ppm)
Warehouse	
WXS1	108,608
WXS2	54,663
WXS3	129,707
WXS4	104,087
WXS5	78,494
Furnace	
FXS1	65,519
FXS2	10,073
FXS3	58,570
FXS4	51,702
Material Storage	
MXS1	81,220
MXS2	85,128
MXS3	90,524
MXS4	115,736
Battery Breaker	
BXS1	62,939
BXS2	24,081
BXS3	85,707

Table 4-2
Analytical Results of Lead in Interior Subsurface Soil Samples
Analyzed using an XRF by ENTACT, April 1996

Sample Number	Depth (ft)	Results (ppm)
Warehouse		
W2-1	1	0
W3-1	1	0
W3-4	4	36
Furnace		
F1-1	1	2,950
F1-2	2	28
F1-4	4	30
F2-1	1	0
F2-4	4	0
F3-1	1	39
F3-4	4	57
Material Storage		
M1-1	1	75,373
M1-2	2	405
M1-8	8	173
M2-1	1	54
M2-4	4	0
M3-1	1	397
M3-4	4	0
M4-1	1	0
M4-4	4	63
M5-1	1	0
M5-4	4	93
Breaker Building		
B1[-1]	1	53
B1[-4]	4	30

Table 4-3
Analytical Results of Lead in Exterior Soil Samples
Analyzed using an XRF by ENTACT, April 1996

Sample Number	Depth (ft)	Results (ppm)
A0	S	6,242
A16	1.33	0
B0	S	6,272
B12	1	8,451
C0	S	9,291
C24	2	2,021
D0	S	11,889
D12	1	0
E0	S	923
F0	S	1,334
F12	1	871
G0	S	3,351
G12	1	20
H0	S	3,163
H12	1	58
I0	S	14,034
I12	1	0
J0	S	16,576
J12	1	41
K0	S	538
L0	S	962
M0	S	1,818
M4	0.33	0
N0	S	2,048
N12	1	0
O0	S	172
P0	S	281
Q0	S	348
R0	S	716
S0	S	525
T0	S	6,821
T12	1	0
U0	S	247
V0	S	4,333
V4	0.33	173
W0	S	1,047
W4	0.33	39
X0	S	655
Y0	S	70,406
Y24	2	457
Z0	S	994
Z4	0.33	0
AA0	S	43
BB0	S	818
BB4	4	41
01-1	1	0
01-4	4	87
02-1	1	12,812
02-2	2	0
03-1	1	0
03-4	4	0
04-1	1	22,793
04-4	4	0
05-2	2	20,556
05-3	3	0
06-1	1	19,654
06-3	3	0

S - Surface
0 - Not detected

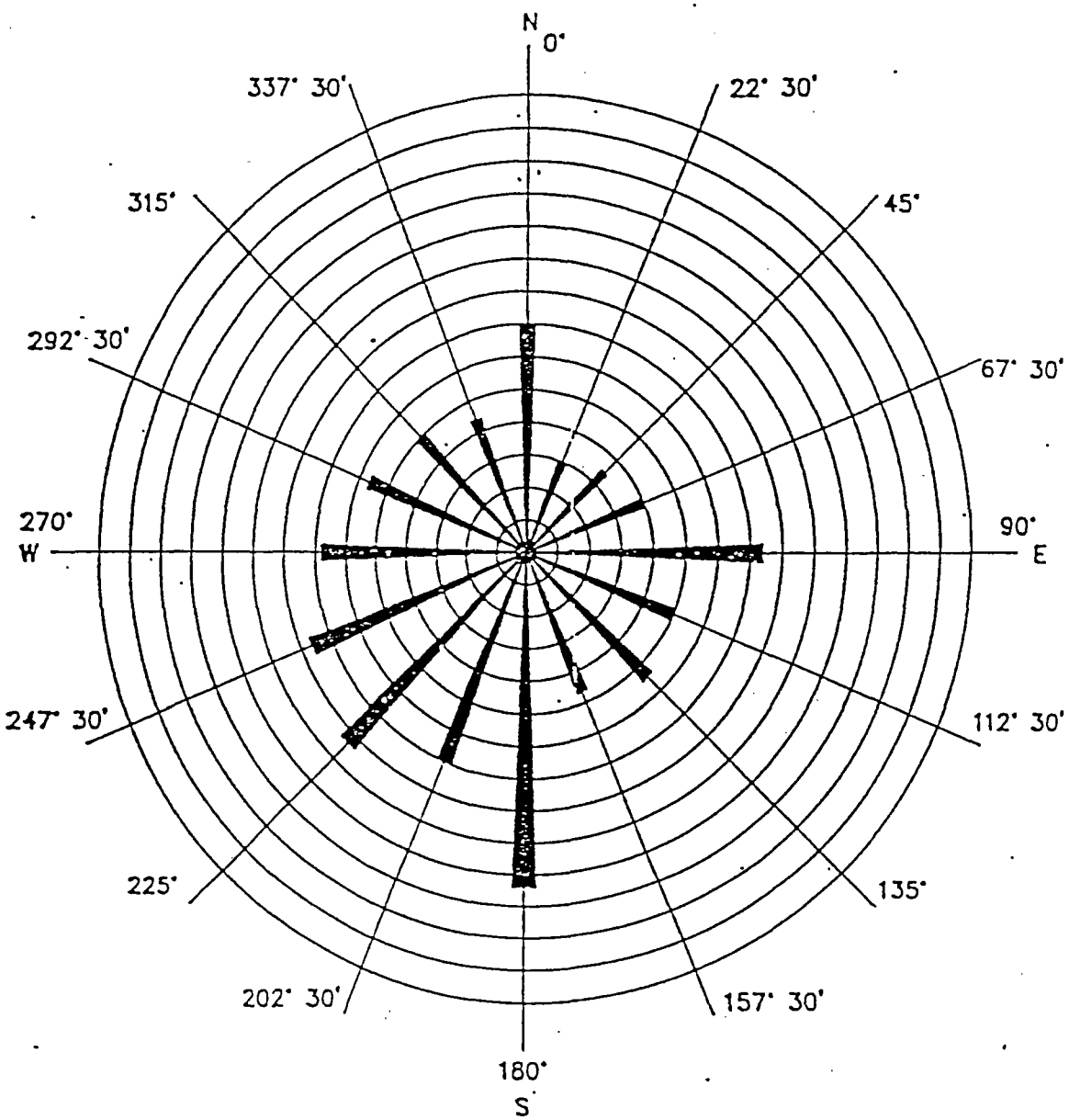

Figure 4–1
Wind Rose
Refined Metals Corporation
Beech Grove, Indiana

MAR - 3 1994

FILTER PRESS

WASTE WATER TREATMENT

BXS2 24,081

BATTERY BREAKER

BXS1 62,939

BXS3 85,707

MXS4 115,736

MXS3 90,524

MATERIAL STORAGE BLDG

MXS2 85,128

MXS1 81,220

BAGHOUSES

MW-1

FXS2 10,073

FXS3 58,570

FURNACE ROOM

REFINING

BAGHOUSES

FXS1 65,519

FXS4 51,702

WXS4 104,087

WXS5 78,494

WAREHOUSE

WXS3 129,707

WXS2 54,663

WXS1 108,608

OFFICE

LAGOON

MW-5

840

838

N E S W

LEGEND

● WXS1 SAMPLE LOCATION

108,608 XRF RESULT (PPM)

80 0 80 160

SCALE IN FEET

NOTE: SAMPLE LOCATIONS ARE APPROXIMATE. SAMPLES WERE COLLECTED AND ANALYZED BY ENTACT, DURING APRIL, 1996

J:\REFINED METALS\DRAWINGS\9847801\98478-08

REFINED METALS CORPORATION
RCRA FACILITY INVESTIGATION WORK PLAN

BEECH GROVE, INDIANA

Date: 7/22/98	CONCENTRATIONS OF LEAD (PPM) IN FLOOR SAMPLES
Scale: 1"=80'	
Drawn By: P.S.G.	Advanced GeoServices Corp. Chadds Ford Business Campus, Rts. 202 & 1 Brandywine One, Suite 202 Chadds Ford, Pennsylvania 19317
Checked By: P.G.S.	
Project Mgr: E.M.G.	
Dwg No. 98478-08	Project No. 98-478-02
Issued:	FIGURE: 4-2

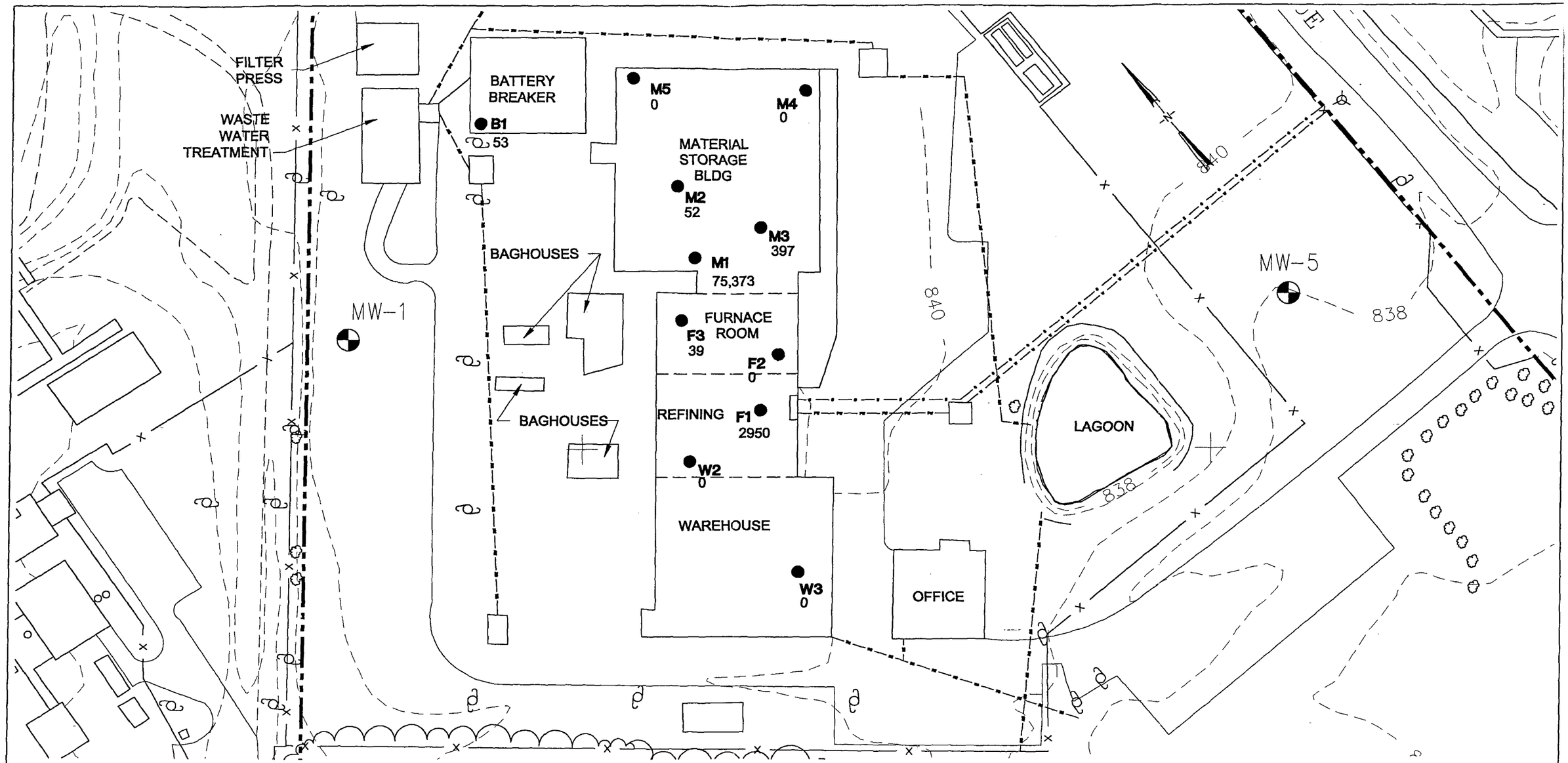

LEGEND

● W1	SAMPLE LOCATION
53	XRF RESULT (PPM)
0	NON-DETECTABLE XRF RESULT

80 0 80 160

SCALE IN FEET

NOTE: SAMPLE LOCATIONS ARE APPROXIMATE. SAMPLES WERE COLLECTED AND ANALYZED BY ENTACT, DURING APRIL, 1996

J:\REFINED METALS\DRAWINGS\9847801\98478-09

REFINED METALS CORPORATION
RCRA FACILITY INVESTIGATION WORK PLAN

BEECH GROVE, INDIANA

Date: 7/23/98	CONCENTRATIONS OF LEAD (PPM) IN INTERIOR SUBSURFACE (1FT) SOIL SAMPLES
Scale: 1"=80'	
Drawn By: P.S.G.	
Checked By: E.M.G.	Advanced GeoServices Corp. Chadds Ford Business Campus, Rts. 202 & 1 Brandywine One, Suite 202 Chadds Ford, Pennsylvania 19317
Project Mgr: P.G.S.	
Dwg No. 98478-09	
Issued: [illegible]	Project No. 98-478-02 — FIGURE: 4-3

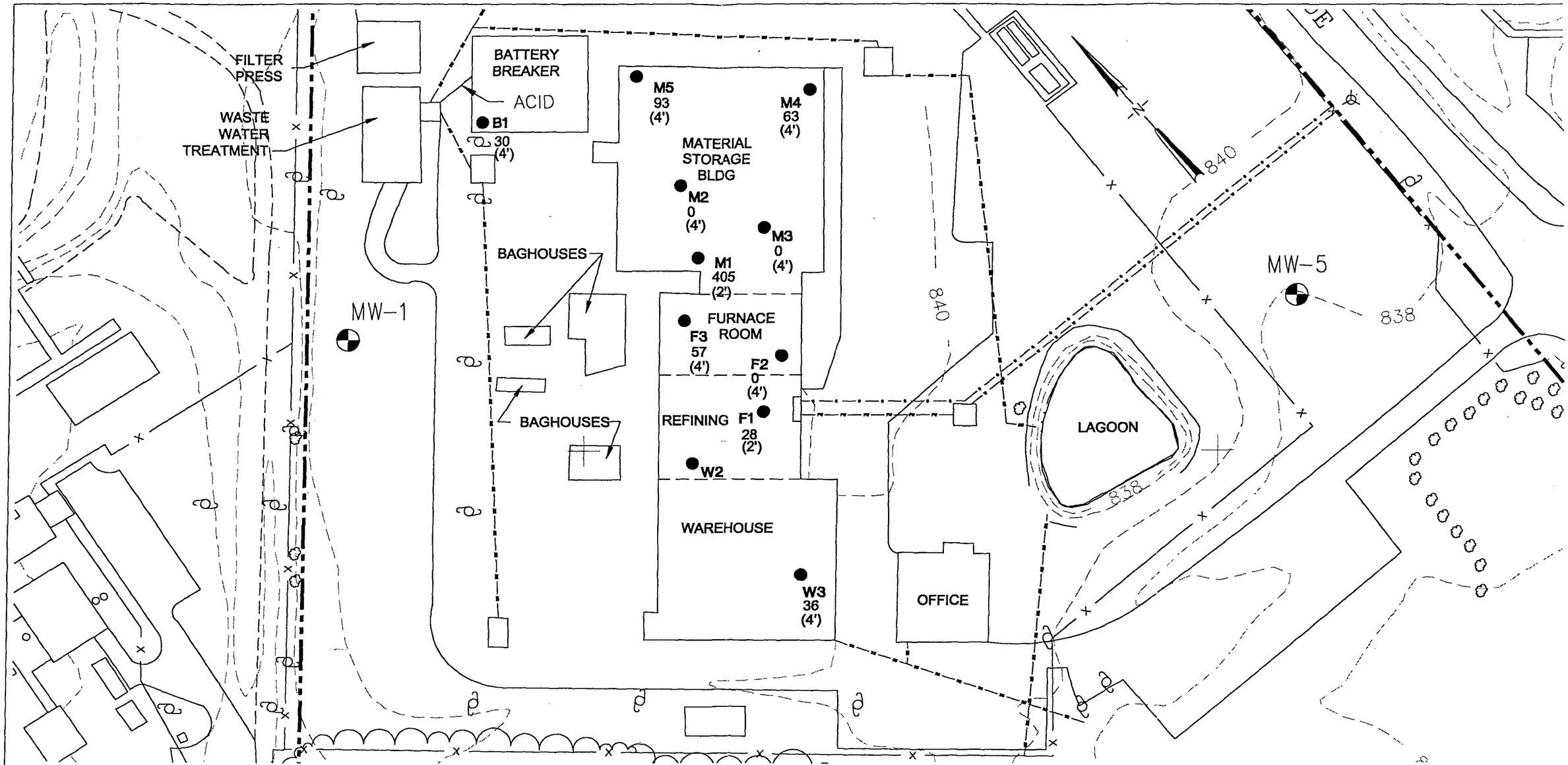

LEGEND

● W1	SAMPLE LOCATION
53	XRF RESULT (PPM)
0	NON-DETECTABLE XRF RESULT
(4')	SAMPLE DEPTH

80 0 80 160

SCALE IN FEET

NOTE: SAMPLE LOCATIONS ARE APPROXIMATE. SAMPLES WERE COLLECTED AND ANALYZED BY ENTACT, DURING APRIL, 1996

J:\REFINED METALS\DRAWINGS\9847801\98478-10

REFINED METALS CORPORATION
RCRA FACILITY INVESTIGATION WORK PLAN

BEECH GROVE, INDIANA

Date: 7/23/98	CONCENTRATIONS OF LEAD (PPM) IN INTERIOR SUBSURFACE (2–4 FT) SAMPLES
Scale: 1"=80'	
Drawn By: P.S.G.	
Checked By: E.M.G.	Advanced GeoServices Corp. Chadds Ford Business Campus, Rts. 202 & 1 Brandywine One, Suite 202 Chadds Ford, Pennsylvania 19317
Project Mgr: P.G.S.	
Dwg No. 98478-10	
Issued: MAR - 3 1999	Project No. 98-478-02 — FIGURE: 4-4

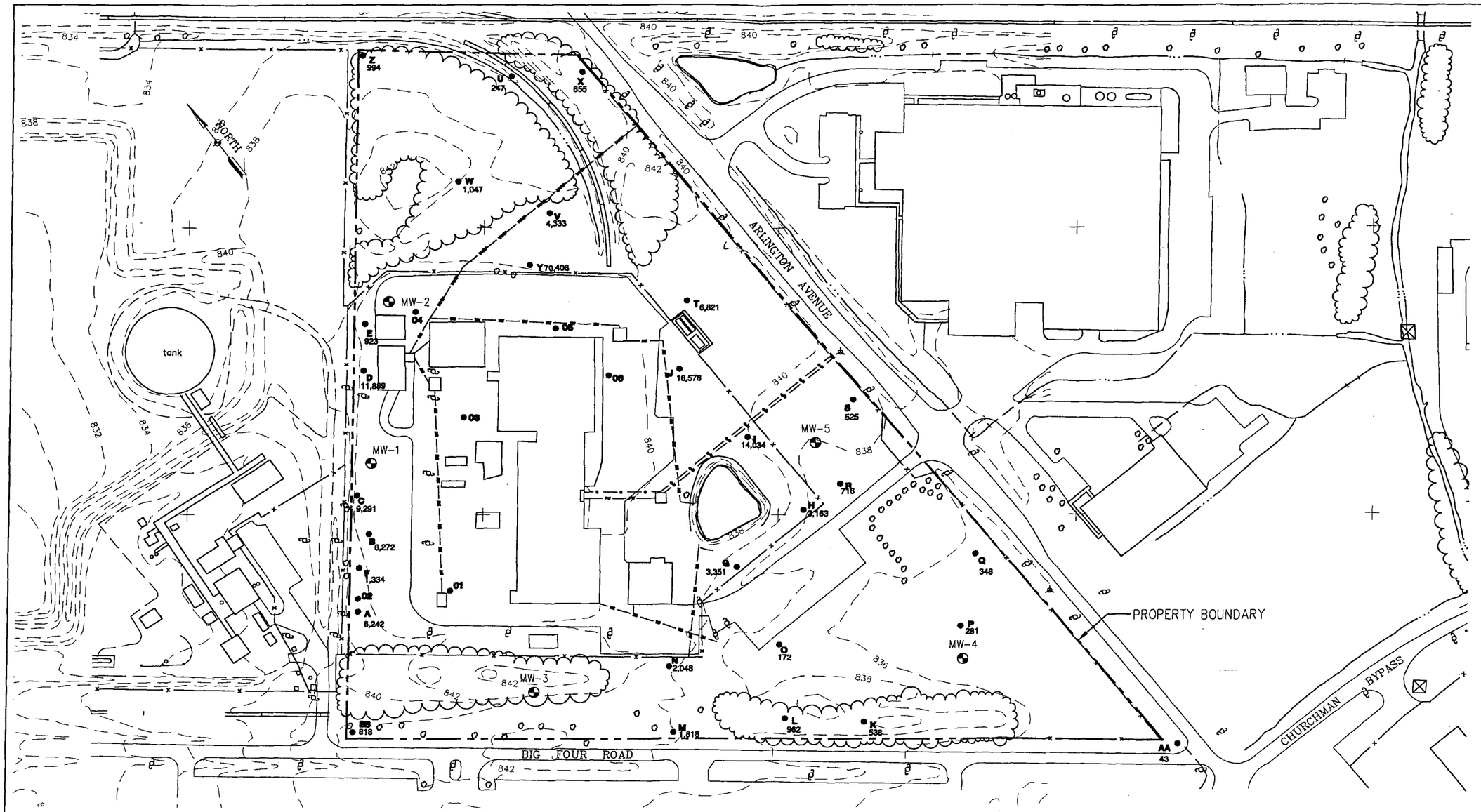

LEGEND

• A	SAMPLE LOCATION
16,576	XRF RESULT (PPM)

180 0 180 360

SCALE IN FEET

NOTE: SAMPLE LOCATIONS ARE APPROXIMATE. SAMPLES WERE COLLECTED AND ANALYZED BY ENTACT, DURING APRIL, 1996

J:\REFINED METALS\DRAWINGS\9847801\98478-16

REFINED METALS CORPORATION
RCRA FACILITY INVESTIGATION WORK PLAN

BEECH GROVE, INDIANA

Date: 7/22/98	CONCENTRATION OF LEAD IN EXTERIOR SURFACE SOIL SAMPLES
Scale: 1"=180'	
Drawn By: P.S.G.	Advanced GeoServices Corp.
Checked By: E.M.G.	Chadds Ford Business Campus, Rts. 202 & 1 Brandywine One, Suite 202 Chadds Ford, Pennsylvania 19317
Project Mgr: P.G.S.	
Dwg No. 98478-16	Project No. 98-478-01
Issued: [illegible]	FIGURE: 4-5

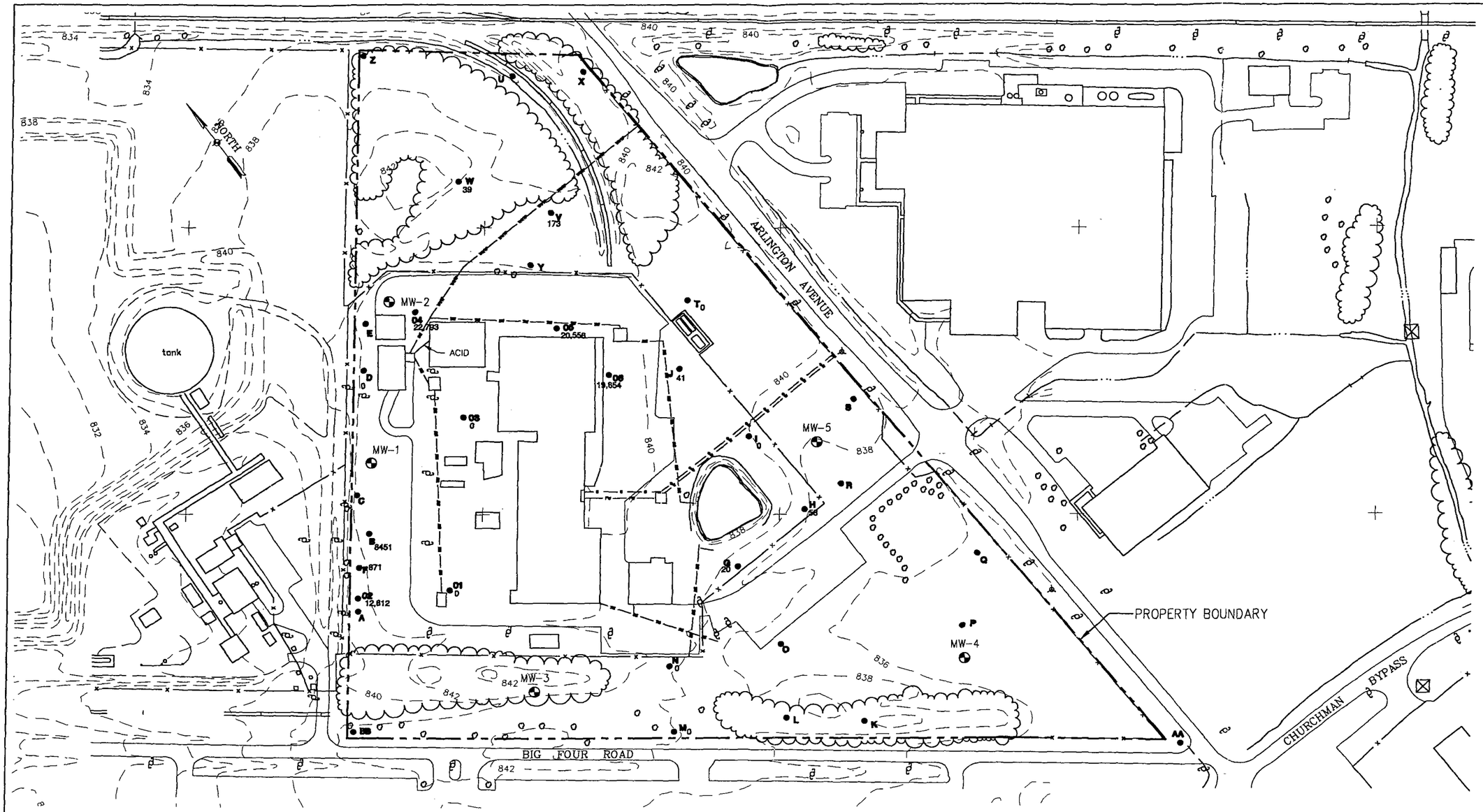

LEGEND

• A	SAMPLE LOCATION
16,576	XRF RESULT (PPM)
0	NON-DETECTABLE XRF RESULT (PPM)

180 0 180 360

SCALE IN FEET

NOTE: SAMPLE LOCATIONS ARE APPROXIMATE. SAMPLES WERE COLLECTED AND ANALYZED BY ENTACT, DURING APRIL, 1996

J:\REFINED METALS\DRAWINGS\9847801\98478-06

REFINED METALS CORPORATION
RCRA FACILITY INVESTIGATION WORK PLAN

BEECH GROVE, INDIANA

Date: 7/22/98	CONCENTRATION OF LEAD IN XRF AND GEOPROBE EXTERIOR SOIL SAMPLES (4–12"), APRIL 1996
Scale: 1"=180'	
Drawn By: P.S.G.	
Checked By: E.M.G.	Advanced GeoServices Corp. Chadds Ford Business Campus, Rts. 202 & 1 Brandywine One, Suite 202 Chadds Ford, Pennsylvania 19317
Project Mgr: P.G.S.	
Dwg No. 98478-06	
Issued:	Project No. 98-478-01 — FIGURE: 4-6

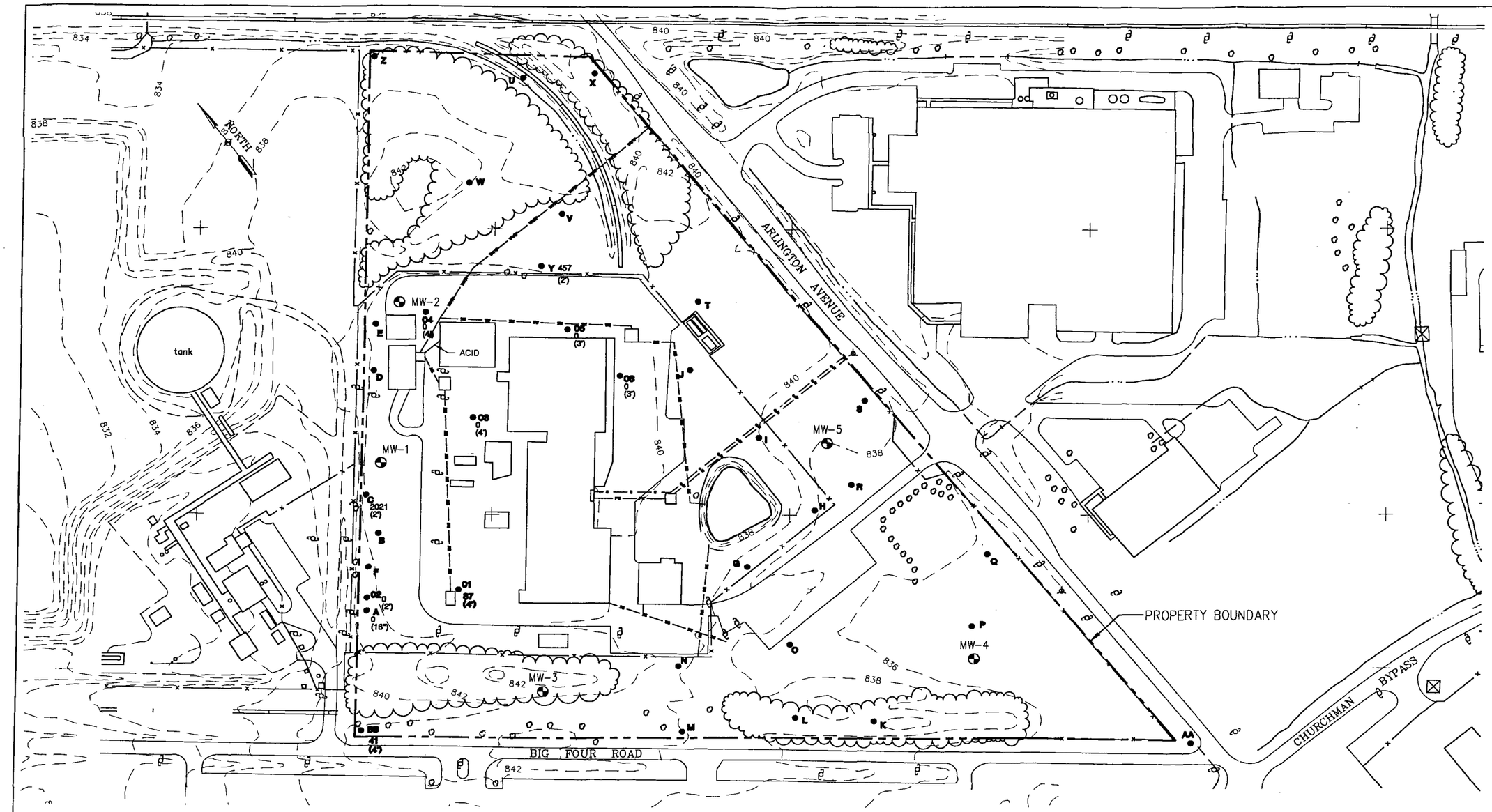

LEGEND

• A	SAMPLE LOCATION
16,576	XRF RESULT (PPM)
0	NON-DETECTABLE XRF RESULT (PPM)
(2')	SAMPLE DEPTH

180 0 180 360

SCALE IN FEET

NOTE: SAMPLE LOCATIONS ARE APPROXIMATE. SAMPLES WERE COLLECTED AND ANALYZED BY ENTACT, DURING APRIL, 1996

REFINED METALS CORPORATION
RCRA FACILITY INVESTIGATION WORK PLAN

BEECH GROVE, INDIANA

Date: 7/22/98	CONCENTRATION OF LEAD IN XRF AND GEOPROBE EXTERIOR SAMPLES 2FT – 4FT, APRIL 1996
Scale: 1"=180'	
Drawn By: V.E.N.	
Checked By: E.M.G.	Advanced GeoServices Corp. Chadds Ford Business Campus, Rts. 202 & 1 Brandywine One, Suite 202 Chadds Ford, Pennsylvania 19317
Project Mgr: E.M.G.	
Dwg No. 98478-07	
Issued:	Project No. 98-478-01 — FIGURE: 4-7

J:\REFINED METALS\DRAWINGS\9847801\98478-07

5.0 PROPOSED SCOPE OF WORK

5.1 FOCUS OF THE INVESTIGATION

The proposed scope of work for the RFI at the Beech Grove facility has been developed to address the Site on a facility wide basis. Sampling activities have been developed under four main tasks which are listed below:

- Evaluate groundwater flow and quality and determine whether additional characterization is necessary;
- Characterize soil quality;
- Determine concentrations of metals within and below the buildings; and
- Determine whether past drainage areas have been affected by historical contaminant transport.

5.2 GROUNDWATER EVALUATION

5.2.1 Groundwater Flow

Since little information is available on the monitoring wells and potential sample discrepancies exist in previous groundwater sample results, AGC is proposing a phased evaluation of groundwater at the Site. If the results of this evaluation indicate that additional characterization is necessary, such characterization will be proposed as a second phase. The current monitoring well network will be evaluated prior to determining if additional monitoring wells are necessary. Water level elevation data is not currently available to evaluate the current monitoring network. Figure 1-2 shows the location of the existing five on-site monitoring wells. An inspection will be conducted to determine

the integrity of each of the wells. The wells will be inspected to determine if the surface seals are intact, locking caps are present, and whether the wells have been damaged. The depth to bottom will be measured and compared with the original depth to bottom to determine whether there are any obstructions, or excess siltation in the wells.

Synoptic water level measurements will be conducted prior to all groundwater sampling events (two quarters are proposed at this time). The synoptic measurements will involve the measurement of water levels and the depths in on-site monitoring wells and piezometers in as short a time frame as possible to determine the water level surface and the approximate direction of groundwater movement across the Site.

During the synoptic water level monitoring round, a team consisting of one or two field personnel will measure water levels in the wells using battery-powered depth-to-water (DTW) meters. At each well, field personnel will measure the depth to water to the nearest 0.01 foot using the surveyed point at the top of the inner well casing for reference. Measurements will be repeated at each well until two consecutive readings are within 0.01 foot. Total depths will also be measured in each well prior to each sampling event to determine if the well has partially filled with sediment. Accurate purge volumes will be calculated and maintained for each well sampled. The meters will be thoroughly rinsed with deionized water prior to use in each well.

The existing wells will be surveyed by an Indiana-licensed surveyor. The top of the inner casing, top of the outer casing, and the ground surface at each well will be surveyed to 0.01 foot accuracy. Prior to groundwater sampling, a round of depth to water measurements will be collected from the monitoring wells. A potentiometric surface map will be constructed using the groundwater elevations to determine the direction of groundwater flow.

5.2.2 Groundwater Quality

Previous groundwater samples were not collected using the low-flow procedure and potential discrepancies exist between the total and dissolved analytical results (some dissolved concentrations are higher than the total concentrations). Therefore, to more accurately determine the potential for site-related constituents to have entered groundwater, groundwater samples will be collected from existing monitoring wells using the low-flow technique. Groundwater samples will be submitted to the analytical laboratory for analysis of total arsenic, barium, cadmium, chromium, lead, mercury, selenium, silver (8 RCRA metals), and antimony. Additionally, as agreed with the USEPA, 1,1,1-trichloroethane, tetrachloroethene, benzene, toluene, and ethylbenzene will be analyzed in groundwater samples collected during the first sampling event. These parameters are being analyzed because mineral spirits were reportedly used on site, and a parts cleaning unit was maintained by Safety Kleen. If VOCs are not detected in groundwater, no additional VOC analysis of groundwater will be required.

The USEPA recommends purging and sampling groundwater monitoring wells at low rates (0.2 to 0.3 liters per minute (L/min)). Purging at low rates (micropurging), as compared to past traditional methods, prevents further development of the well and mobilization of additional particulate and colloidal matter. Low-flow sampling reduces well turbidity, and minimizes potential changes in chemical concentrations resulting from either mixing of formation water with stagnant water in the well casing. Wells should be purged below their recovery rates to avoid drawdown during pumping and eliminate vertical migration of water contained in the formation above the well screen. Researchers (Puls, 1991; Powell and Puls, 1993; and Robin and Gillham, 1987) have concluded that representative groundwater samples can be obtained through the use of micropurging without removing numerous well volumes; samples are collected after measurement of specific field parameters stabilize. Turbidity, redox potential, and dissolved oxygen, pH, and conductivity should be measured using flow-through cells. Purging is complete when pH varies by less than 0.1 standard

If insufficient volume is available in any monitoring well to purge using low-flow techniques (i.e., the low-flow pump cannot remove water from a well), a decontaminated stainless steel or Teflon bailer will be used to purge the well.

Purge water will be contained in 55-gallon drums at each well location until analytical results of groundwater samples are evaluated. If groundwater samples are free from contaminants then the purge water from those wells may be discharged to the ground surface. Purge water will not be allowed to flow off-site.

If samples indicate relatively high levels of contaminants, the water will be contained in drums prior to disposal at an appropriate facility; this may include processing through the on-site waste water treatment plant. Drums will be labeled with the location and date of generation (i.e., purge water, MW-1, 5/25/96) and will remain at the well location until disposal.

5.2.3.2 Sample Withdrawal

Once the field parameters stabilize, the flow rate will be reduced to 100 mls/min. for collecting VOC samples and 100 to 300 mls/min. for the remaining parameters. Samples will then be collected directly from the pump discharge line into properly labeled sample bottles containing the necessary preservatives.

If sufficient volume is not available to sample with the low-flow pump, a dedicated Teflon bailer will be used to collect the sample. The dedicated disposable bailer will be lowered slowly into the screened interval to collect the sample with minimal agitation to the water. If any samples are collected with a bailer, both total and dissolved metals will be analyzed. Samples for dissolved metals analyses will be field filtered through a dedicated disposable Nalgene 0.45 μm membrane filter immediately after collection and prior to preservation. The sample will be decanted into the dedicated Nalgene disposable filtration unit and filtered under vacuum pressure created by a hand-held pump.

Only consider totals results if filtration

5.3 SOIL SAMPLING

5.3.1 On-Site Soil Sampling

Soil samples will be collected on the site to more fully determine the extent of site-related constituents in soil. Soil sampling results collected by ENTACT were used as a screening level to help determine sample locations. In areas where several samples had low concentrations (<500 ppm) fewer samples are proposed (southeastern corner). A 100-foot grid will be used to guide the soil sampling efforts, although as stated, not every grid node will be sampled. Figure 5-1 shows the arbitrary grid and the proposed soil sample locations. A total of 58 locations will be sampled on-site; samples will be collected from depths of 0 to 3 inches and 3 to 10 inches bgs at each location. Ten sample locations will also be sampled from 24-30" bgs. These samples will be collected from areas where screening results indicated the highest concentrations in surface and subsurface samples. Several soil piles were observed northeast of the production area during AGC's site visits (Figure 5-1). Four soil samples from two sample locations will be collected from the two largest piles (sample locations not specified on Figure 5-1). Samples will be collected from the piles to characterize the soils.

All samples will be analyzed for eight RCRA metals. Surface samples will be collected using dedicated disposable scoops; and subsurface samples will be collected using decontaminated hand augers. The samples will be homogenized in decontaminated stainless steel bowls prior to being placed in the laboratory-supplied sample jars. Decontamination procedures are described in the QAPP (Appendix B).

5.3.2 Off-Site Soil Sampling

Off-site locations will be sampled to help define the extent of contamination and determine whether contamination extends beyond the facility property line. Four locations will be sampled on the Citizens Gas Company property located northwest of the Site. Results of the XRF screening

indicated that an area of high soil lead concentrations existed near the northern property boundary (bordering Citizens Gas Company). Historical surface water runoff could have transported surface soils onto the Citizens Gas Company property. Four locations will also be sampled on the Wavetech property, south of the Site (Figure 5-1). Samples are being collected on the Wavetech property because several locations along the southwestern property border had screening results near 1,000 ppm.

Samples will be collected from depths of 0 to 3 inches and 3 to 10 inches bgs using dedicated disposable scoops and decontaminated hand augers as described above. Based on previous screening results (high soil lead concentrations along the northern property boundary), two locations on the Citizens Gas Company site will also be sampled from 24-30" bgs. Samples will be submitted to the analytical laboratory and analyzed for eight RCRA metals.

5.3.3 Diesel Spill Soil Sampling

Since documentation of the closure of the diesel spill and response action was not available, soil samples will be collected from the former spill area. The spill from the out-of-service diesel tank reportedly occurred outside of the containment wall and flowed along a drainage channel north of the refining area. Three locations along the drainage channel will be sampled beginning near the containment area (Figure 5-1).

Samples will be collected from 0 to 3 inches, and 3 to 10 inches bgs at each location. Surface samples will be collected using dedicated disposable scoops; and subsurface samples will be collected using decontaminated hand augers. The samples will be placed directly into laboratory-supplied sample jars. Decontamination procedures are described in the QAPP (Appendix B). Samples will be submitted to the analytical laboratory and analyzed for benzene, toluene, ethylbenzene, cumene, naphthalene, fluorene, and phenanthrene. These parameters are regulated substances for diesel fuel.

5.4 INTERIOR SAMPLING

5.4.1 Floor Dust Sampling

Floor dust sampling will be conducted at three locations on the floor (see Figure 5-2) within the Materials Storage building to characterize the floor material for possible future disposal. Samples will be collected using dedicated disposable scoops. Dust samples will be submitted to the analytical laboratory and analyzed for total lead and cadmium. Additional parameters may also be analyzed to determine the acceptability of the material for resource recovery. The additional parameters and analytical methods will be dictated by the acceptance criteria of the anticipated recycling facility.

5.4.2 Subfloor Soil Sampling

Soil samples will be collected from below the floor slab (subfloor samples) inside the Material Storage Building, the Furnace Room, Refining, and Warehouse from the randomly selected locations shown on Figure 5-2. The floor slabs will be penetrated using a jackhammer or pneumatic drill. Subfloor samples will be collected from immediately below the floor slab (i.e., 0 - 6"), from 12 to 24 inches, and 24 to 30 inches bgs using decontaminated hand augers. Soil samples will be homogenized in decontaminated stainless steel bowls prior to placing them in laboratory-supplied sample jars. Decontamination procedures are described in the QAPP (Appendix B). Subsurface samples will be analyzed for eight RCRA metals.

5.5 SEDIMENT SAMPLING

Previous sampling efforts did not address past depositional environments at the Site. Therefore, this scope of work will focus on collecting sediment samples from two former drainage channels described in Section 3.2 and identified on aerial photographs, and within the lined lagoon. Samples will be collected from five locations along the intermittent stream on the northern portion of the Site. Samples will be collected from five locations along the former drainage channel from the stormwater

lagoon. These samples will be used to evaluate historic depositional environments from past Site activities. Figure 5-3 shows the proposed sediment sample locations.

Samples will be collected from each location at depths of 0 to 6 inches and 6 to 12 inches bgs using a decontaminated hand auger. Soil samples will be homogenized in decontaminated stainless steel bowls prior to placing them in laboratory-supplied sample jars. Decontamination procedures are provided in the QAPP. The samples will be analyzed for eight RCRA metals.

Composite sediment samples will be collected from two locations within the concrete and geomembrane lined surface impoundment. The depth of the sediment will be measured at each sample location; a composite sample will be collected over the vertical profile of sediment at each sample location. Samples will be collected using a decontaminated shovel or disposable scoop so as to not jeopardize the integrity of the liner. Samples will be analyzed for eight RCRA metals.

5.6 SUPPLEMENTARY SURVEY

Soil and sediment sample locations will be surveyed by a professional surveyor licensed in the state of Indiana. In addition, the surveyor will perform additional survey tasks. The additional tasks include surveying the monitoring wells, locating utilities, and collecting additional vertical and horizontal data necessary to confirm the accuracy of the base map used for the figures contained in this plan.

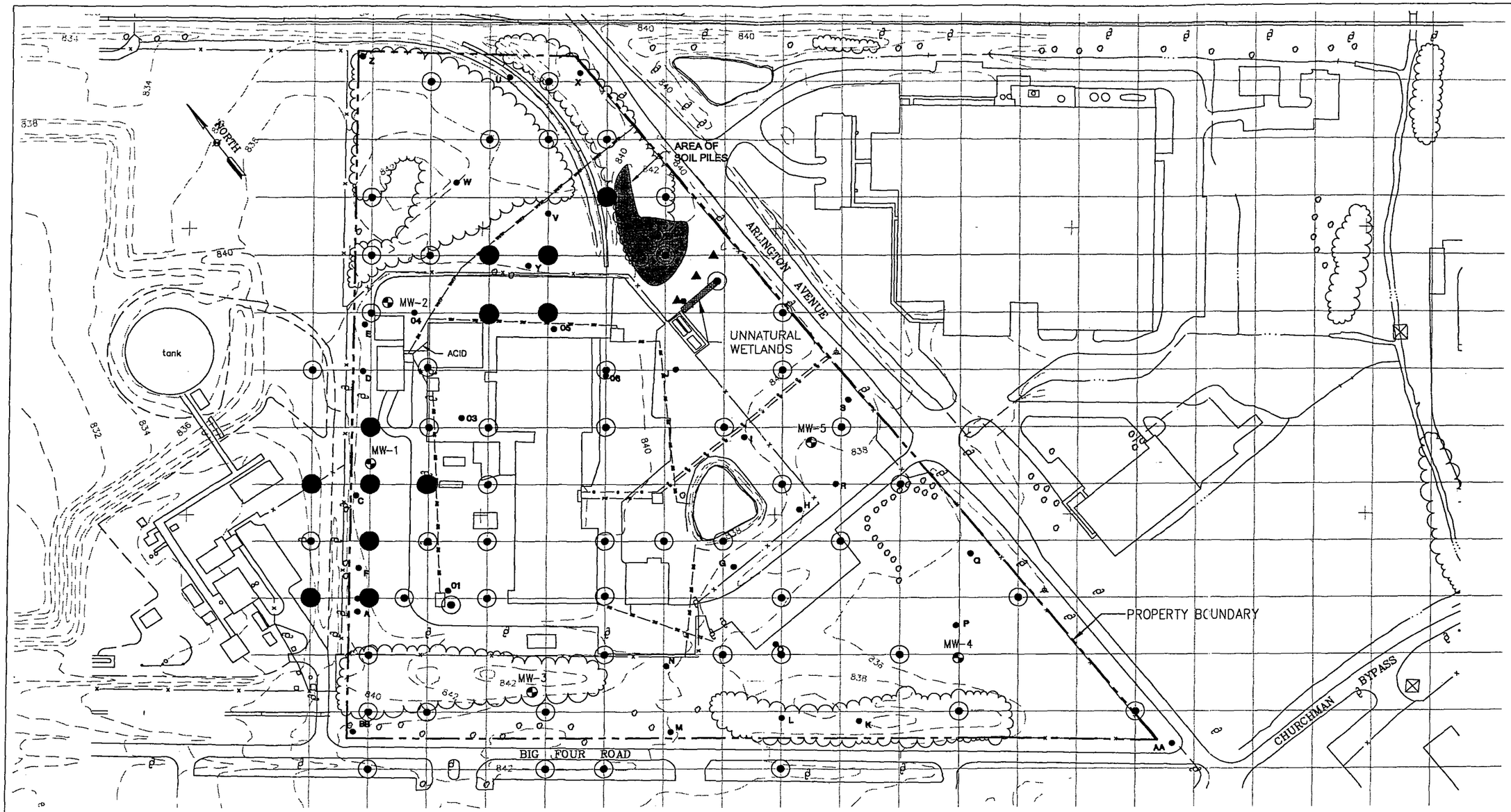

LEGEND

- • A PREVIOUS SAMPLE LOCATION
- ⊙ PROPOSED SOIL SAMPLE LOCATION (0-3, 3-10")
- ● PROPOSED DEEPER SOIL SAMPLE LOCATION (0-3, 3-10, AND 24-30")
- ▲ PROPOSED DIESEL SPILL SOIL SAMPLE LOCATION (0-3 AND 3-10")

180 0 180 360

SCALE IN FEET

NOTE: PREVIOUS SAMPLE LOCATIONS ARE APPROXIMATE. SAMPLES WERE COLLECTED AND ANALYZED BY ENTACT, DURING APRIL 1996

REFINED METALS CORPORATION
RCRA FACILITY INVESTIGATION WORK PLAN

BEECH GROVE, INDIANA

Date: 7/22/98	PROPOSED SOIL SAMPLE LOCATION MAP
Scale: 1"=180'	
Drawn By: P.S.C.	
Checked By: E.M.G.	Advanced GeoServices Corp. Chadds Ford Business Campus, Rts. 202 & 1 Brandywine One, Suite 202 Chadds Ford, Pennsylvania 19317
Project Mgr: P.G.S.	
Dwg No. 98478-05	
Issued:	Project No. 98-478-01 — FIGURE: 5-1

J:\REFINED METALS\DRAWINGS\9847801\98478-05

Revision	Description	Date	By
1	Added new monitoring well locations	7/6/99	E.M.G.

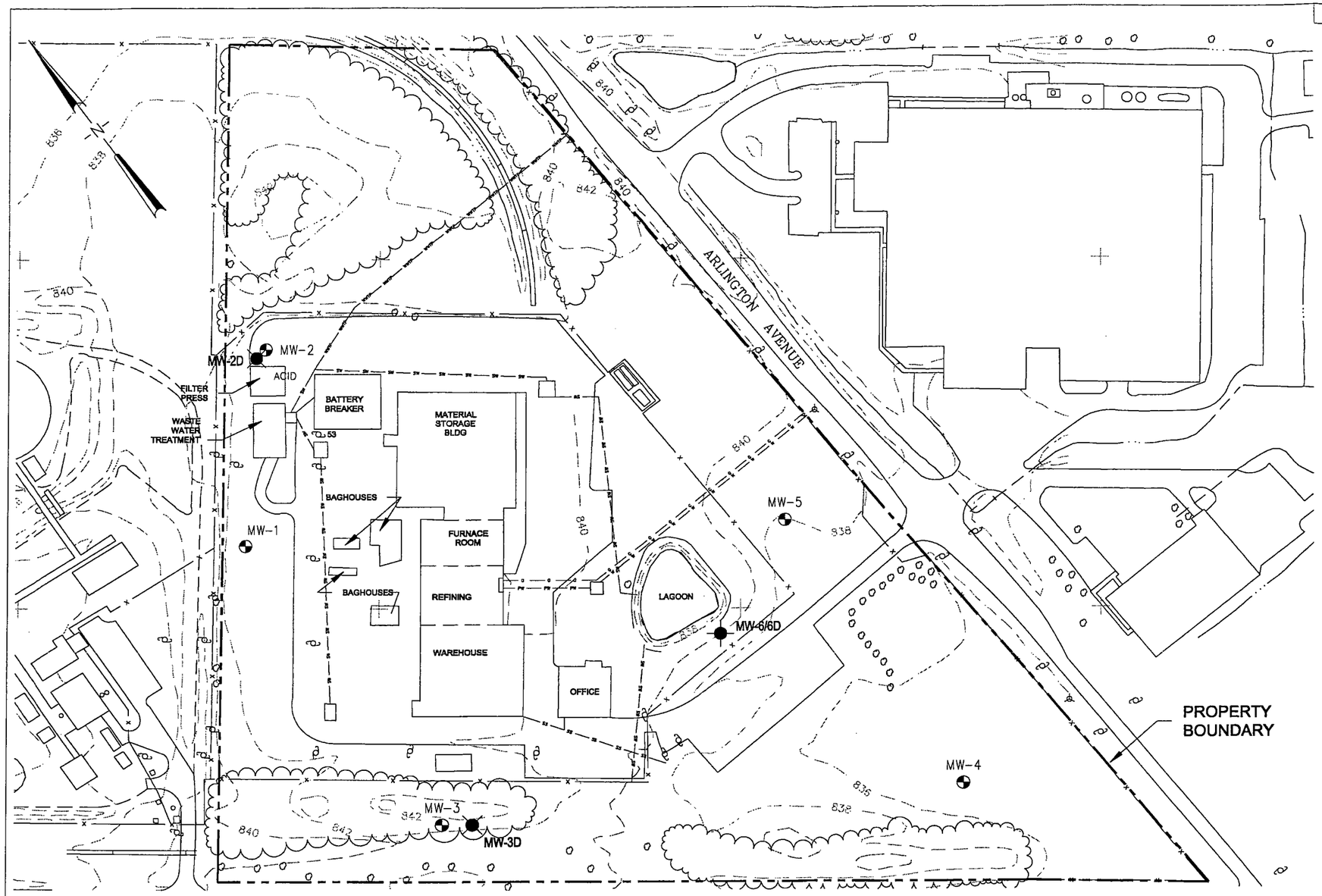

LEGEND

PROPOSED SHALLOW AND DEEP WELL LOCATIONS (SHALLOW WELL BEING INSTALLED AS PART OF THE SITE CLOSURE PLAN)

PROPOSED DEEP WELLS

NOTE:
1. THE ACTUAL LOCATION OF MW-6 WELL CLUSTER WILL BE BASED ON THE SHALLOW GROUND WATER FLOW DIRECTION.

160 0 160 320
SCALE IN FEET

REFINED METALS CORPORATION
RCRA FACILITY INVESTIGATION

BEECH GROVE, INDIANA

Scale: 1"=160'	PROPOSED MONITORING WELL LOCATIONS
Originated By: E.M.G.	
Drawn By: V.E.N.	
Checked By:	Advanced GeoServices Corp. Chadds Ford Business Campus, Rts. 202 & 1 Brandywine One, Suite 202 Chadds Ford, Pennsylvania 19317
Project Mgr: P.G.S.	
Dwg No. 98478-19	
Issued:	Project No. 98-478-02 — FIGURE: 5-1A

J:\REFINED METALS\DRAWINGS\9847802\98478-19

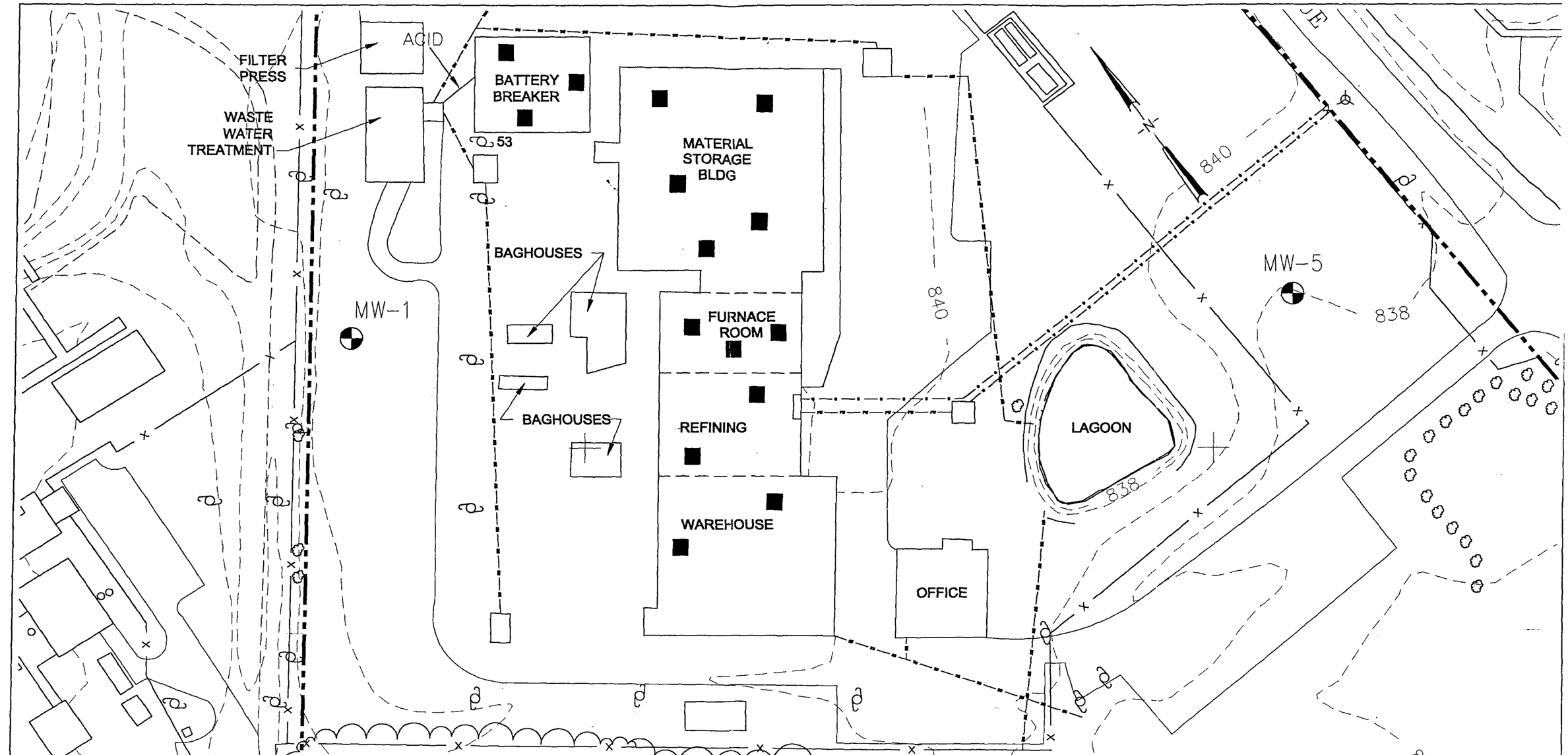

LEGEND

■ PROPOSED DUST / SUBSURFACE SOIL SAMPLE LOCATION

80 0 80 160

SCALE IN FEET

NOTE: SAMPLE LOCATIONS ARE APPROXIMATE. SAMPLES WERE COLLECTED AND ANALYZED BY ENTACT, DURING APRIL, 1996

J:\REFINED METALS\DRAWINGS\9847801\98478-13

REFINED METALS CORPORATION
RCRA FACILITY INVESTIGATION WORK PLAN

BEECH GROVE, INDIANA

Date: 7/23/98	PROPOSED DUST / SUBSURFACE SOIL SAMPLE LOCATIONS
Scale: 1"=80'	
Drawn By: V.E.N.	
Checked By: E.M.G.	Advanced GeoServices Corp. Chadds Ford Business Campus, Rts. 202 & 1 Brandywine One, Suite 202 Chadds Ford, Pennsylvania 19317
Project Mgr: P.G.S.	
Dwg No. 98478-09	Project No. 98-478-02
Issued:	FIGURE: 5-2

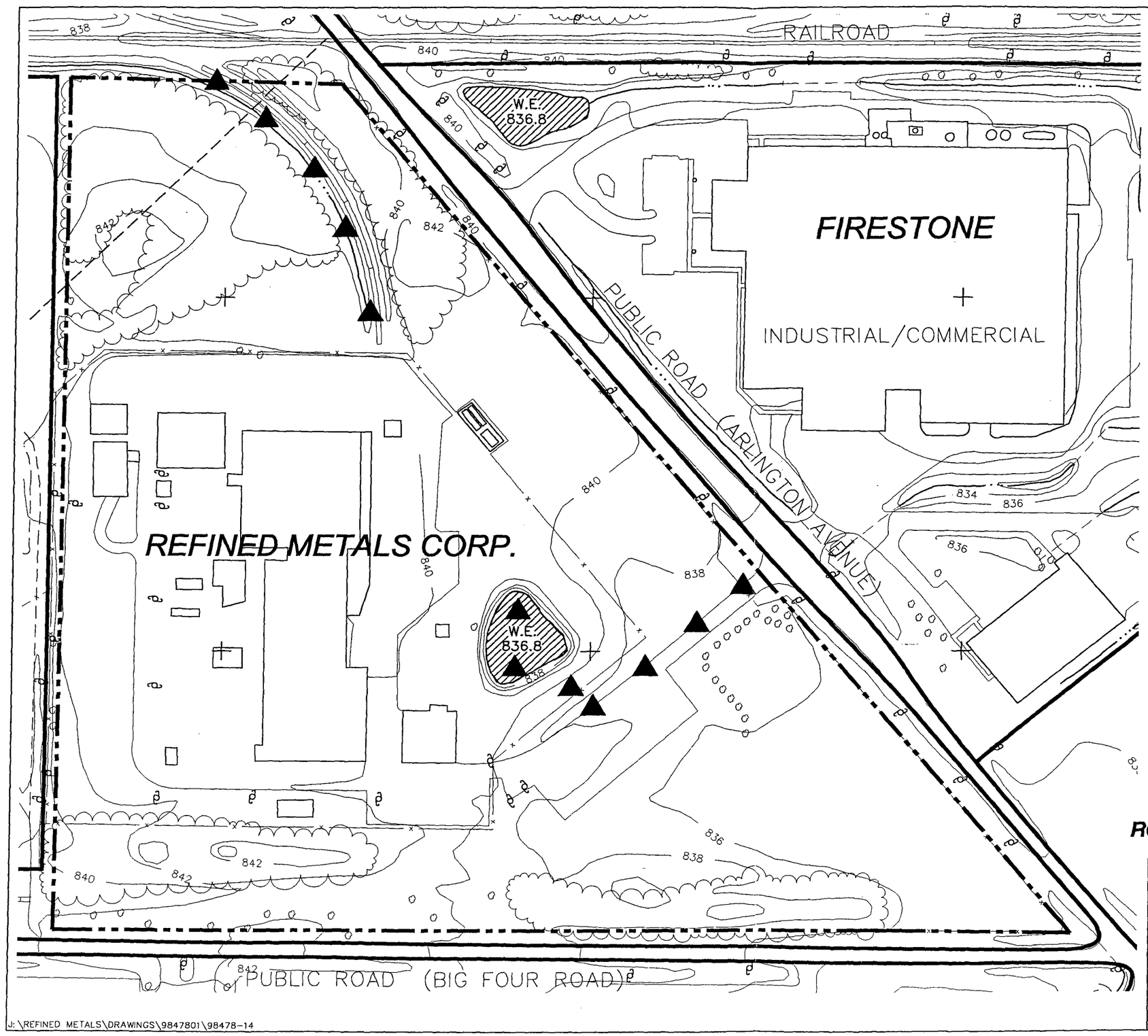

LEGEND:

- SURFACE WATERS
- TEN FOOT CONTOUR LINE
- SURFACE WATER
- PROPERTY BOUNDARY
- DELINEATES CURRENT LAND USE
- ZONING LINE
- PROPOSED SEDIMENT SAMPLE LOCATION

140 0 140 280

SCALE IN FEET

REFINED METALS CORPORATION
RCRA FACILITY INVESTIGATION WORK PLAN

BEECH GROVE, INDIANA

Date: 7/24/98	PROPOSED SEDIMENT SAMPLE LOCATIONS
Scale: 1"=140	
Drawn By: P.S.G.	Advanced GeoServices Corp. Chadds Ford Business Campus, Rts. 202 & 1 Brandywine One, Suite 202 Chadds Ford, Pennsylvania 19317
Checked By: E.M.G.	
Project Mgr: P.G.S.	
Dwg No. 98478-14	
Issued: MAR - 3 1999	Project No. 98-478-01 — FIGURE: 5-3

J:\REFINED METALS\DRAWINGS\9847801\98478-14

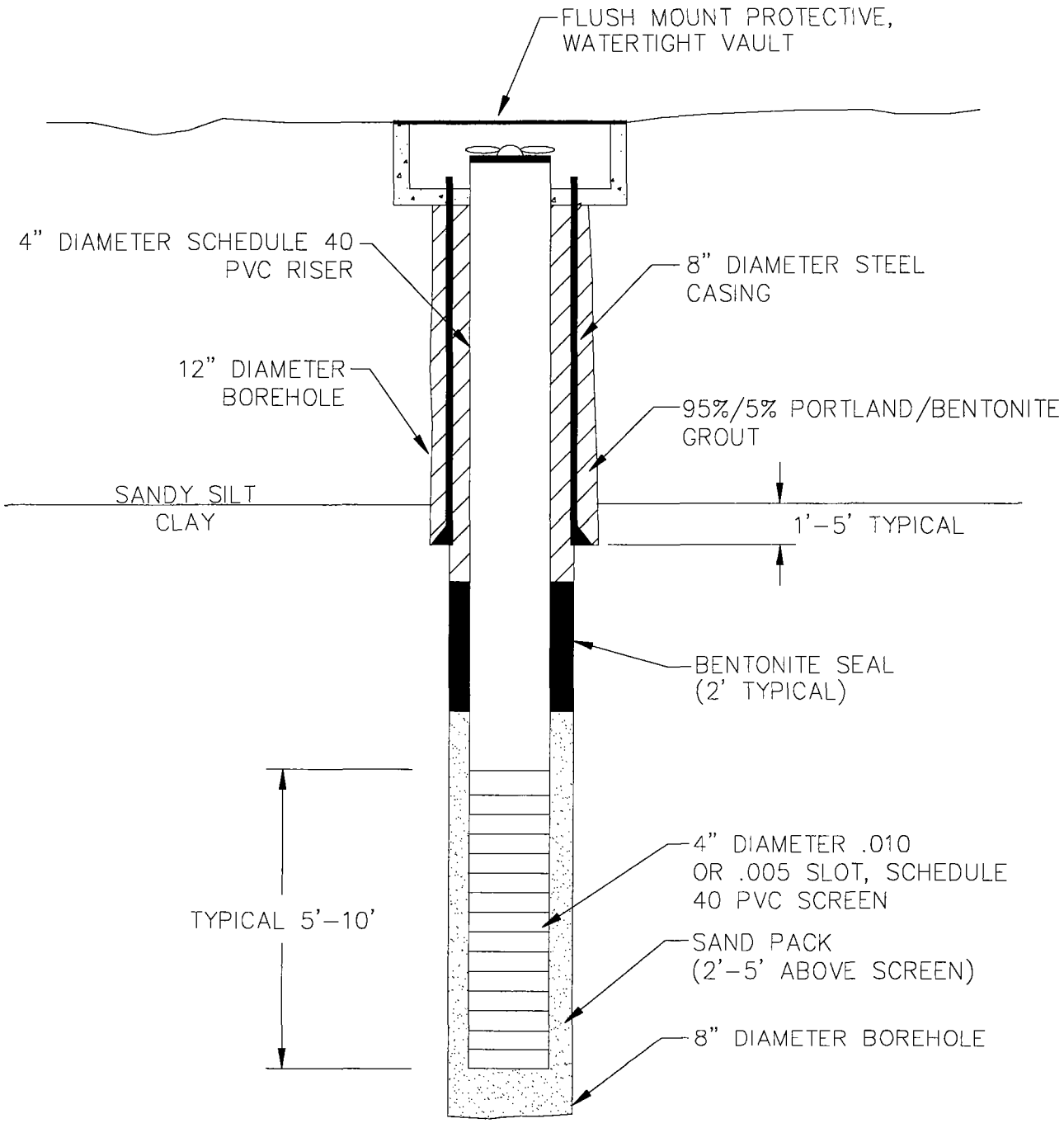

LEGEND

- CONCRETE
- GROUT MIX
- BENTONITE SEAL
- SAND PACK

REFINED METALS CORPORATION
RCRA FACILITY INVESTIGATION
BEECH GROVE, INDIANA

Scale: N.T.S.	DEEP MONITORING WELL SCHEMATIC
Originated By: E.M.G.	
Drawn By: V.E.N.	
Checked By:	Advanced GeoServices Corp. Chadds Ford Business Campus, Rts. 202 & 1 Brandywine One, Suite 202 Chadds Ford, Pennsylvania 19317
Project Mgr: P.G.S.	
Dwg No. 98478-20	
Issued:	Project No. 98-478-01 — FIGURE: 5-4

J:\REFINED METALS\DRAWINGS\9847801\98478-20

6.0 POTENTIAL CORRECTIVE MEASURE TECHNOLOGIES

The technologies presented in the following sections identify the potential corrective measure technologies known to the Respondent that may be used on-site or off-site for the containment, treatment, remediation, and/or disposal of lead contaminated soils. The technologies are primarily directed toward lead contaminated soils.

6.1 NO-ACTION ALTERNATIVE

The no-action alternative does not involve a treatment technology but is a potential option at the Site. This alternative will be evaluated from the results of the RFI and risk assessments and will be performed as part of the Corrective Measures Study.

6.2 CONTAINMENT

Containment is an effective and proven means of protecting human health and the environment. A properly designed and constructed cover system prevents contact between the surface environment and underlying material. Therefore, a cover can effectively mitigate the risks of dermal contact, soil ingestion, inhalation of fugitive dust emissions, surface water contamination by erosion of soil, and groundwater contamination caused by leaching of lead from soil.

Accepted practices in containment strategies range from simple single layer covers to multi-layer designs. Single layer covers consisting of either soil, asphalt, or concrete can be easily designed to be compatible with most site conditions and effectively mitigate dermal contact, ingestion, inhalation, and impacts to surface water risks. A multi-layer cap provides the same mitigation benefits as a single layer cover and the additional benefit, if necessary, of a significant reduction in surface water infiltration. The reduction in infiltration can result in a significant reduction in contaminant leaching to groundwater if the contaminants are highly mobile in the present environment.

6.3 OFF-SITE DISPOSAL

Off-site disposal would entail excavating the soil with constituent(s) above the cleanup goals, loading the soil into transport vehicles, hauling it to an approved disposal facility, and placing the soil in the disposal facility in accordance with prevailing regulations.

There are two potential disposal scenarios for contaminated soil. First, all soil would be disposed of as a hazardous waste at a permitted facility as directed under RCRA requirements. In the second scenario, all soil would be pre-treated on-site to render the waste non-hazardous, and thus suitable for disposal at a municipal waste facility as directed under state solid waste disposal regulations.

The following factors warrant consideration when evaluating off-site disposal: public opinion and disturbance to the community, generation of dust during excavation and/or material handling operations, possible contamination of areas along the transportation route, availability of landfill space, and the proximity of the disposal location to the Site. These factors will be evaluated during the Corrective Measures Study.

6.4 SOIL WASHING

Soil washing is a technology which uses a liquid wash solution in an attempt to scrub or cleanse a portion of a contaminated waste material. The process of soil washing typically involves the physical separation of soil into three size fractions: coarse sand and gravel size, fine sand size, and silt and clay size. The objective of this separation is to remove chemicals of concern from the larger particles and concentrate them within the smaller silt and clay size particles. Acid and base solutions may be added to the process in an attempt to enhance the removal. Various additives have been tried by different vendors and many consider their methods proprietary.

Soil washing can be a particularly effective treatment technique for clean (i.e., no soil fines) coarse grained materials since coarse grained particles are more easily cleaned, especially when compared to smaller particle sizes. Soils containing a significant quantity of fine grained particles (silt and clay) have been shown to resist soil washing treatment (Krishnan and Kremner, 1989 and Raghavan et. al., 1989). When the fraction approaches 20 to 30 percent of the soil mass, extraction of contaminants becomes extremely difficult. Soil washing is not the preferential treatment in Europe when the soil contains greater than 20 percent fines (Nunno, et. al., 1989).

In addition to the difficulty of removing contaminants from soils, problems have also been experienced with removal of fine soil particles from the wash solution as fine particles interfere with the washing and filtering of highly contaminated residues (PEI Associates, 1988).

Soil washing was the original technology selected by the USEPA at several lead battery Superfund sites. However, due to technological problems and/or changed sites conditions, soil washing has been removed from consideration for the final remedy. Based on the soil classification of the surface soils at the Site, it is unlikely soil washing would be effective.

6.5 RESOURCE RECOVERY AND RECYCLING

Resource recovery and recycling are technologies which involve the sequential separation and recovery of components of the waste stream. These technologies constitute the "end-of-the-line" goals for separation technologies such as soil washing. Recovery, as defined by 40 CFR Part 245.101, is the process of obtaining materials or energy resources from solid waste. In contrast, recycling is defined as the process by which recovered materials are transformed into new products. The challenge for the on-site materials is to transform a heterogeneous mass into homogeneous fractions which are recoverable and, if possible, recyclable. This technology is not considered viable at the Site because the separation technologies would not likely be effective and the soil lead concentrations present are too low to present an economic justification.

6.6 STABILIZATION/SOLIDIFICATION

Stabilization/Solidification (S/S) involves a physical or chemical reduction of the mobility of hazardous constituents and the binding of contaminants within a low permeability solid monolith, which significantly reduces pollutant mobility. S/S has been successful for stabilization of inorganic waste streams. The EPA recognizes several different S/S processes. Of these processes, cement-based S/S and pozzolanic S/S are most commonly used and have been demonstrated to be very effective at treating heavy metals. In addition, there are many proprietary processes which use various chemicals to reportedly render the treated material non-hazardous.

One of the main goals of S/S process is pollutant immobilization. Immobilization is accomplished through physical isolation (microencapsulation) and fixation (electrochemical attraction). Physical processes involve entrapment of contaminants within the solid matrix and reducing mobility by decreasing permeability. Chemical processes reduce mobility by converting the contaminant to a less mobile form. As an example of two chemical processes, precipitation involves converting a contaminant to an immobile solid, while sorption reduces mobility by fixing contaminants onto the solid matrix. Immobilization typically provides a significant decrease in toxicity, leachability and potential for migration of contaminants.

S/S has been shown to be effective for lead contaminated soils. S/S can be performed either in-situ or ex-situ. In-situ S/S techniques include treating 8 to 12 inch lifts of soil using standard soil mixing field equipment. Ex-situ S/S techniques involve pug mills and batch plant mixers to mix the waste with stabilizing agents. The process involves excavation of the waste so that it could be placed in the batch mixer. Particles larger than 1/4 inch are removed by a screening process. Ex-situ mixing units are known to work well with particles less than 1/4 inch diameter, but experience clogging and jamming with larger particles. Particles larger than 1/4 inch are considered inappropriate for ex-situ S/S (EPA, 1988c). Ex-situ techniques also raise the likelihood of lead contaminated dust generation because of the required excavation and handing of the waste material.

7.0 ANCILLARY PLANS

The following plans will be used during the completion of this RFI:

- Project Management Plan
- Quality Assurance Project Plan and Data Management Plan
- Health and Safety Plan
- Community Relations Plan

The Project Management Plan describes the project organization, key personnel, and their roles and responsibilities to complete this RFI. The Project Management Plan is provided as Appendix A of this RFI.

The Quality Assurance Project Plan and Data Management Plan describe the data collection and management procedures to be followed during the course of this RFI. Procedures to be used during sample collection and custody procedures to be followed through shipment to the laboratory are provided. The data validation and management procedures are also presented. The Quality Assurance Project Plan and Data Management Plan are provided as Appendix B.

The RFI Health and Safety Plan is provided as Appendix C. This health and safety plan will be followed by all personnel conducting sampling activities at the Site.

The Community Relations Plan is provided as Appendix D. This Plan is intended to describe the procedures for disseminating information about the RFI to the general public.

8.0 REFERENCES

RCRA FACILITY INVESTIGATION WORK PLAN REFERENCES

Fenneman, N.M., 1938. Physiography of Eastern United States, New York, McGraw-Hill Book Co., Inc.

Harrison, W., Geology of Marion County, Indiana. Indiana Department of Conservation Geological Survey, 1963.

Powell, R.M. and Puls, K.W., 1993. Passive Sampling of Groundwater Monitoring Wells Without Purging; Multi-level Well Chemistry and Tracer Disappearance. Journal of Contaminant Hydrology, Volume 12, pp. 51-77.

Puls, R.W., Clark, D.A., Bledsoe, B., Powell, R.M., and Paul, C.J., 1992. Metals in Groundwater; Sampling Artifacts and Reproducibility. Hazardous Waste and Hazardous Materials, Volume 9 (2) pp. 149-162.

U.S. Environmental Protection Agency, 1989. RCRA Facility Investigation Guidance Document. EPA 530/SW-89-031.

U.S. Environmental Protection Agency, 1989. Stabilization/Solidification of CERCLA and RCRA Wastes: Physical Tests, Chemical Testing Procedures, Technology Screening, and Field Activities. EPA/625/6-89/022. May.

U.S. Environmental Protection Agency, 1990. Engineering Bulletin: Soil Washing Treatment. EPA/540/2-90/017. September.

U.S. Environmental Protection Agency, 1990. Engineering Bulletin: Selection of Control Technologies for Remediation of Lead Battery Recycling Sites. EPA/S-92/011. September.

Meyer, Wm., J.P. Resson, and Gillies, D.C. Availability of Groundwater in Marion County, Indiana, U.S. Geological Survey. Open-File Report 75-312.

FIGURE A-1
PROJECT ORGANIZATION CHART
REFINED METALS CORPORATION
RCRA FACILITY INVESTIGATION

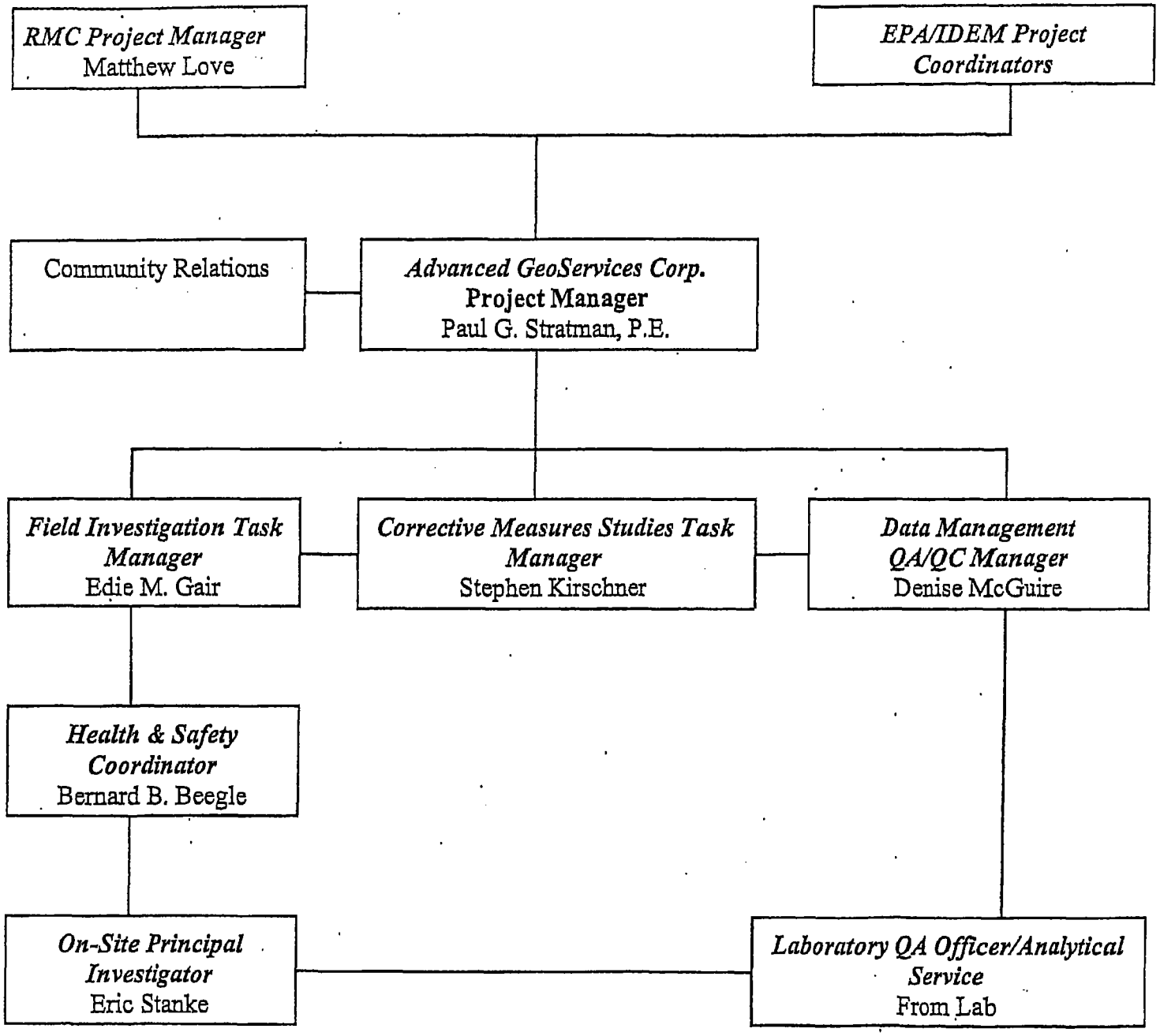

RFI IMPLEMENTATION SCHEDULE
FOR
REFINED METALS CORPORATION
BEECH GROVE, INDIANA FACILITY

TASK	DAYS
WORK PLAN REVIEW AND APPROVAL	
SUBMISSION OF RFI WORK PLAN FOR EPA AND IDEM REVIEW	0
EPA AND IDEM REVIEW AND COMMENT ON RFI WORK PLAN	45
RMC RESPONCE TO COMMENTS ON RFI WORK PLAN	30
EPA AND IDEM REVIEW AND APPROVAL OR REVISED RFI WORK PLAN	15
RFI IMPLEMENTATION	
NOTIFY LANDOWNERS AND MUNICIPALITY ABOUT PROPOSED WORK	15
SECURE ACCESS FOR SAMPLING OFFSITE	30
PERFORM SOILS AND SEDIMENT SAMPLING	60
INSTALL & DEVELOP MONITORING WELLS	60
PERFORM QUARTERLY GW SAMPLING	15
LABORATORY ANALYSIS	45
DATA VALIDATION	15
PREPARATION OF SUMMERY REPORT	30
MONTHLY PROGRESS REPORTS	

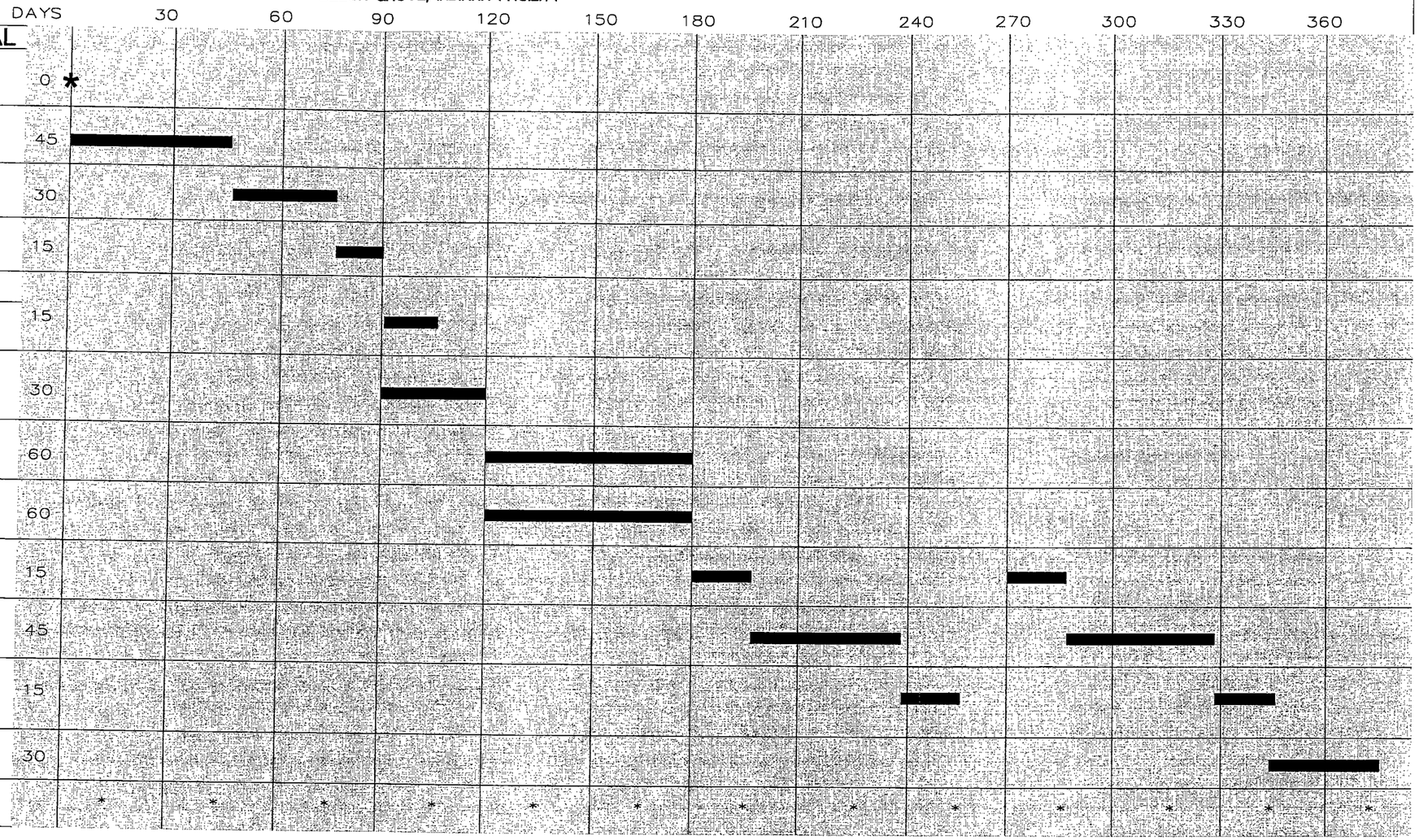

REFINED METALS CORPORATION
RCRA FACILITY INVESTIGATION WORK PLAN
BEECH GROVE, INDIANA

Date: 8/10/98	SCHEDULE
Scale: N.T.S.	
Drawn By: B.C.L.	
Checked By: P.G.S.	Advanced GeoServices Corp. Chadds Ford Business Campus, Rts. 202 & 1 Brandywine One, Suite 202 Chadds Ford, Pennsylvania 19317
Project Mgr: P.G.S.	
Dwg No. 97478-17	Project No. 97-478-01
Issued:	FIGURE: A-2

J:\REFINED METALS\DRAWINGS\98478-01\98478-17.DWG

APPENDIX A

PROJECT MANAGEMENT PLAN

Prepared For:

REFINED METALS CORPORATION
Beech Grove, Indiana

Prepared By:

ADVANCED GEOSERVICES CORP.
Chadds Ford, Pennsylvania

Project No. 98-478-01
March 3, 1999

APPENDIX A

PROJECT MANAGEMENT PLAN

1.0 INTRODUCTION

This Project Management Plan has been developed to ensure that the Refined Metals Site RCRA Facility Investigation is conducted in an efficient and cost-effective manner. The objective is to fully characterize the rate, extent of migration, and the concentrations of site-related constituents that have been released from source areas at the facility into the soil, groundwater, and air; and to gather the data to support the Corrective Measures Study.

A project management team has been established to guide all phases of the investigation, to conduct the necessary field studies, collect representative data, and perform engineering evaluations within the proposed project schedule and budget.

The project will require the concurrent gathering of additional site data and engineering evaluations of potential corrective measures. It is imperative that the activities of the RCRA Facility Investigation (RFI) and Corrective Measures Study (CMS) are closely coordinated through the Project Manager to ensure proper data acquisition and evaluation, and timely project completion. Adjustments to the scope of work presented in this Work Plan may be necessary as additional site data are acquired and assessed in terms of developing a final corrective action plan.

2.0 PROJECT ORGANIZATION

The key components of the Refined Metals RFI Management Plan are:

- An organization structure that meets the requirements and needs of the program.
- RFI Implementation Schedule that establish a baseline against which progress is measured.
- A program to monitor and control various activities and provide management input into the process.

2.1 ORGANIZATIONAL STRUCTURE

The organization structure defines the responsibilities and lines of authority of the project personnel. The organizational structure that has been developed for this project is shown on Figure A-1.

The project team will operate within clearly defined areas of responsibility, authority and channels of communication, which will apply to all program personnel including subcontractors. The project staff members will operate in accordance with the responsibilities and authorities described below.

Refined Metals Corporation Project Manager: Matthew A. Love
Exide Corporation
645 Penn St., Reading, PA 19612
(610) 378-0874

Mr. Love will have overall responsibility for overseeing the investigation including representing RMC on all technical and administrative matters with the EPA and IDEM, and complying with Consent Decree activities.

AGC Project Manager: Paul G. Stratman, P.E.
Advanced GeoServices Corp.
Chadds Ford, PA 19317

Mr. Stratman will have complete responsibility for the execution of this project. As AGC Project Manager, he will ensure through continued overview and control that the scope of work is conducted and completed in a technically acceptable manner within the planned budget and schedule requirements. He will be responsible for the tracking of manpower and monetary expenditures during the course of the project and will ensure that resource utilization is within the established budget. The AGC Project Manager will maintain the key role in technical decision-making and problem resolution that will be required during the conductance of the program, and will review and approve all reports before submittal to the Responsible Party, EPA, and IDEM.

Mr. Stratman will be the focal point for technical correspondence and communication within the AGC project team. It will be the responsibility of the AGC Project Manager to ensure that the activities of the Task Managers on the various work elements are timely, complete, and properly interfaced. The AGC Project Manager will be responsible for ensuring that all support personnel, and facility and support functions are available to the project team when and as they are needed. The AGC Project Manager will be responsible for the adherence of project team members to the directives of the Health & Safety Coordinator and QA/QC Manager.

AGC Quality Assurance Manager: Denise McGuire
Advanced GeoServices Corp.
Chadds Ford, PA 19317

The AGC Quality Assurance Manager, based in Chadds Ford, Pennsylvania, will monitor the quality and procedural aspects of AGC's efforts from sampling through storage, transportation, analysis and presentation of data. The duties will also include audits of field and analytical procedures to document that each aspect of the project is performed in accordance with EPA protocol and the project work plan. She will be responsible for all communications with the analytical laboratory.

These responsibilities will include maintaining a data base of all samples that are submitted for analyses, verifying receipt of the samples by the laboratory, that analyses are completed within the required time period, maintaining original copies of all information received from the laboratory and distributing copies of the laboratory analyses to the project manager. All requests for sample containers, preservatives, etc. will be given to her by the project staff. The laboratory QA Coordinator will maintain laboratory standards and traceability documentation and will perform analytical data package validation.

Sample Custodian:

The Sample Custodian located at the project site and part of the sampling team will be responsible for controlling laboratory provided sample containers. He will be responsible for issuance of sample containers to the AGC on-site principal investigator, inspection and log-in of incoming samples and control of samples storage.

AGC Task Managers: Edie M. Gair/Steve Kirschner (610) 558-3300, Chadds Ford, PA

The AGC Team Managers will be Edie M. Gair and Steve Kirschner. They will be assigned to the RCRA Facility Investigation and Corrective Measures Study, respectively. The Team Managers will be responsible for coordinating the tasks of the Principal Investigator and technical staff personnel and will report directly to the AGC Project Manager. They will be responsible for the preparation of baseline plans and for the performance of the work elements that comprise this project.

AGC On-Site Principal Investigator: Eric E. Stanke

AGC's On-Site Principal Investigator (PI) will be responsible for the execution of the technical program within each of the individual areas of investigation. The PI will be responsible for the implementation of the technical procedures governing the performance of the various tasks and for the execution of the work required to accomplish these tasks. The PI will also be responsible for maintaining detailed time and expenditure records to be used by the AGC Project Manager in tracking the status of the project.

The PI will report to the respective Task Manager. The PI will be assisted by supplementary technical staff personnel and support personnel on an as-needed basis for particular work elements. These supplementary personnel will be directly under the control of the PI. Similarly, the technical performance and quality assurance of subcontractors will be under the direct control of the PI.

3.0 PROJECT MANAGEMENT

3.1 RFI IMPLEMENTATION SCHEDULE

The RFI Implementation Schedule establishes the baseline against which project progress will be measured. The schedule elements are organized into tasks that will be performed to accomplish the program objectives and will provide the basis for program control.

3.2 MANAGEMENT CONTROL

A variety of reporting mechanism and procedures will be employed for the purpose of monitoring and controlling the program. The AGC Project Management system accumulates program data and provides information on the schedule and financial status of the entire program. The system is designed to be flexible so that it can meet the specific requirements of the program. Project staffing and coordination is provided internally at AGC through weekly staffing meetings.

3.3 MANAGEMENT REPORTS

Monthly project status reports will be provided during implementation of the RFI, as required by the Consent Decree. Additional reports will be made verbally between the RMC Project Manager and the AGC Project Manager as necessary based on project progress.

The Monthly Progress Report will include a statement of the overall project status. It will summarize all findings; all changes made in the RFI during the reporting period; all contacts with representatives of the local community, public interest groups, or State government during the reporting period; actions being taken to rectify problems; changes in personnel during the reporting period; projected work for the next reporting period; and copies of daily field reports, inspection reports, laboratory/monitoring reports; and any other reports.

As required, monthly project reports will be provided to the RMC Project Manager who will be responsible for submitting updates to EPA and IDEM. Reporting will begin at the end of the first full month following the lodging date of the Consent Decree, and continuing throughout the period the Consent Decree is effective. The AGC progress reports will be submitted to RMC by the seventh day of the following month.

4.0 PROJECT SCHEDULING

The estimated Project Schedule shown on Figure A-2 indicates the RFI Investigation will be conducted in a sequence of progressive work tasks. The RFI Work Plan delivery, review and approval by USEPA and IDEM comprise the first task.

APPENDIX D

COMMUNITY RELATIONS PLAN

REFINED METALS CORPORATION SITE

Prepared For:

REFINED METALS CORPORATION
Beech Grove, Indiana

Prepared By:

ADVANCED GEOSERVICES CORP.
Chadds Ford, Pennsylvania

March 3, 1999
98-478-02

F:\OFICEAGC\PROJECTS\FILES\98-478\Reports99\TOCCommunity.wpd

TABLE OF CONTENTS

PAGE NO.

1.0 Introduction 1-1

2.0 Facility Contact 2-1

3.0 Site Description 3-1

4.0 Scope of the RFI 4-1

5.0 Community Relations Program 5-1

5.1 Objectives 5-1
5.2 Community Relations Techniques 5-1

5.2.1 Document Repository 5-1
5.2.2 Public Meeting 5-1
5.2.3 Establish Contact with Adjacent Neighbors 5-2
5.2.4 Maintain Contact with Local Officials 5-2

LIST OF FIGURES

A-1 Project Organization Chart

1.0 INTRODUCTION

This document presents the Community Relations Plan (CRP) for the RCRA Facility Investigation (RFI) to be conducted at the Refined Metals Corporation facility (the Site) in Beech Grove, Indiana. The CRP is intended to describe the mechanism for disseminating information about the RFI to the general public. The CRP addresses the elements specified in the Consent Decree for the Site.

2.0 FACILITY CONTACT

The following person may be contacted with questions or comments concerning the RFI to be conducted at the RMC facility in Beech Grove, Indiana.

Mr. Matthew A. Love
Exide Corporation
645 Penn Street
Reading, PA 19612-4205
(610) 378-0500

3.0 SITE DESCRIPTION

The RMC facility is located at 1600 Arlington Avenue, Beech Grove, Marion County, Beech Grove, Indiana (Figure 1). The facility encompasses approximately 24 acres and is situated on a minor local topographic high with a surface elevation of approximately 845 feet mean sea level (msl). The surface elevation slopes gently to the southeast toward Sloan Ditch; the northwestern perimeter of the site slopes to the northwest toward the intermittent headwaters of Beech Creek. Figure 3-1 of the RFI Work Plan shows the site surface waters. Surface water at the Site is collected in the surface lagoon which is discharged to the municipal sewer system. Sloan Ditch flows 0.6 mile west-southwest to Churchman Creek which flows to the west 0.9 mile and discharges to Beech Creek. Beech Creek flows 1.2 miles to the southwest to Lick Creek, which then flows 7 miles to the White River.

The Site is surrounded by several different land uses. A railroad spur is located north of the Site and a refrigerated warehouse is located across the railroad track. A Firestone facility which manufactures roofing materials is located east of the Site across Arlington Avenue. A vacant commercial building is also located to the east, and homes and farmland are located northeast of the railroad spur. A mixture of vacant and industrial properties lie to the south of the Site, including Wavetech circuit breaker plant, Universal Machine and Tool Works, and various warehouses. The Beech Grove High School is located 0.75 mile southwest of the Site. A Citizens Gas storage facility and pipeline are located northwest of the Site, and a railroad yard and repair facility for Conrail and Amtrak are located beyond Citizens Gas towards the northwest.

The Site was owned and operated by National Lead from 1968 through 1980, when it was sold to Exide Corporation. In 1985, the Site was purchased by Refined Metals Corporation (RMC). Prior to 1968, the Site was reportedly undeveloped woodlands.

The plant was constructed in 1968 as a secondary lead smelter. In 1984, a battery breaker operation was installed. From April 14, 1995, through December 31, 1995, operations were reduced to enriching and casting lead ingots from off-specification lead products. Since 1996, no production has taken place.

The facility was constructed to recycle lead batteries and other lead wastes. Auto batteries constituted 90 percent of the materials recycled, and the remainder was waste material from battery manufacturers and other lead scrap. During operation, the batteries were temporarily stored in trailers or on pallets in a paved storage yard. The batteries were then fed into the battery crusher, where the tops of the batteries were sawed off and the sulfuric acid was drained into a stainless steel tank that drained to the wastewater treatment system. The battery casings and their contents were tumbled and crushed. Lead plates and other lead parts were separated and transported to the materials storage building to be later placed in the furnace. The battery casings were shredded and separated into plastic and ebonite in a flotation tank. The plastic was blown into a trailer for sale to be sold to an offsite recycler. The ebonite casings were stored and then fed into the blast furnace.

During operation, the blast furnace used coke and oxygen-enriched air for heating. Liquid oxygen was stored in a 10,000-gallon tank located north of the blast furnace building. Scrap iron was added to the blast furnace to remove sulfur. Molten lead would form at the bottom of the furnace, and the slag would float to the top. The slag was poured into ingots and solidified. The dust furnace used natural gas and oxygen-enriched air to melt baghouse dust, which was then fed into the blast furnace.

Molten lead from the blast furnace flowed to refining kettles and was analyzed to determine the content. The kettles were heated by natural gas burners. If necessary, antimony and tin were added to the lead to create the proper alloy proportions. Conversely, antimony and tin may have been removed from the lead by adding sodium hydroxide or by oxidation and skimming. Copper was removed by adding red phosphorus. The refined lead was poured into molds and solidified in 60-pound bars.

4.0 SCOPE OF THE RFI

The RFI to be conducted is part of the ongoing corrective action program under the Resource Conservation and Recovery Act (RCRA) being carried out at the RMC facility.

The technical objectives of the Consent Decree are to:

1. Effectuate closure of waste piles and surface impoundment by submitting a closure plan and post closure plan, if necessary, and then to implement the plan(s) as approved;
2. Perform a RFI to evaluate and determine the full nature and extent of releases and collect information necessary to support a Corrective Measures Study, or Interim measures;
3. Perform Interim/Stabilization Measures to abate threats to human health and the environment;
4. Perform a Corrective Measures Study to develop and evaluate alternatives and to recommend a final corrective measure(s); and
5. Perform Corrective Measures.

Elevated concentrations of lead have been detected in surface and subsurface (less than four feet below ground surface) soils at the Site. Low levels of lead and arsenic have been detected in groundwater samples collected from the Site. RMC has developed a RCRA Facility Investigation (RFI) Work Plan to define the nature and extent of releases of site-related contaminants at the Site.

The RFI activities will include:

- evaluation of the existing monitoring well network;
- groundwater sampling using the existing network;
- surface and subsurface soil sampling, on and offsite;
- surface and subsurface sampling inside of the buildings; and
- sediment sampling of the surface impoundment and former drainage channels.

5.0 COMMUNITY RELATIONS PROGRAM

5.1 OBJECTIVES

The objectives of the community relations program include maintaining open channels of communication with local, state, and federal officials, the media, and local citizens, and establishing contact with potentially affected citizens to inform them of site activities.

5.2 COMMUNITY RELATIONS TECHNIQUES

The following activities will be conducted to follow through with the Community Relations Program. The extent to which these techniques are used will depend on community interest in the project.

5.2.1 Document Repository

RMC will provide a copy of all documents generated during the RFI (i.e., RFI Work Plan, Final RFI Report) to the public repository (public library) for public review for 180 days after they are submitted in final form to the EPA.

Any written comments received during the public review will be compiled by RMC and submitted to the EPA Project Manager for evaluation.

5.2.2 Public Meeting

If a substantial amount of public interest is generated by the RFI activities, RMC will hold a public meeting to discuss the project. The USEPA will be notified within 15 days of any planned public meeting. The notification will include the location, time, date, purpose and agenda of the meeting. The public meeting will allow RMC representatives to present information about the RFI and subsequent activities to the extent they are known. Questions will be recorded during the meeting

and then responded to in writing by RMC within two weeks following the meetings.

5.2.3 Establish Contact with Adjacent Neighbors

To ensure open communication with adjacent land owners to the RMC facility, a letter will be issued prior to start of RFI field activities informing the land owner about the upcoming field activities and, if necessary, request access to off-site properties for sample collection.

5.2.4 Maintain Contact with Local Officials

Site-related developments will be communicated to state and local officials, as necessary, to maintain open lines of communication. This will be achieved most effectively by providing copies of the monthly updates to the necessary parties.

FIGURE A-1
PROJECT ORGANIZATION CHART
REFINED METALS CORPORATION
RCRA FACILITY INVESTIGATION

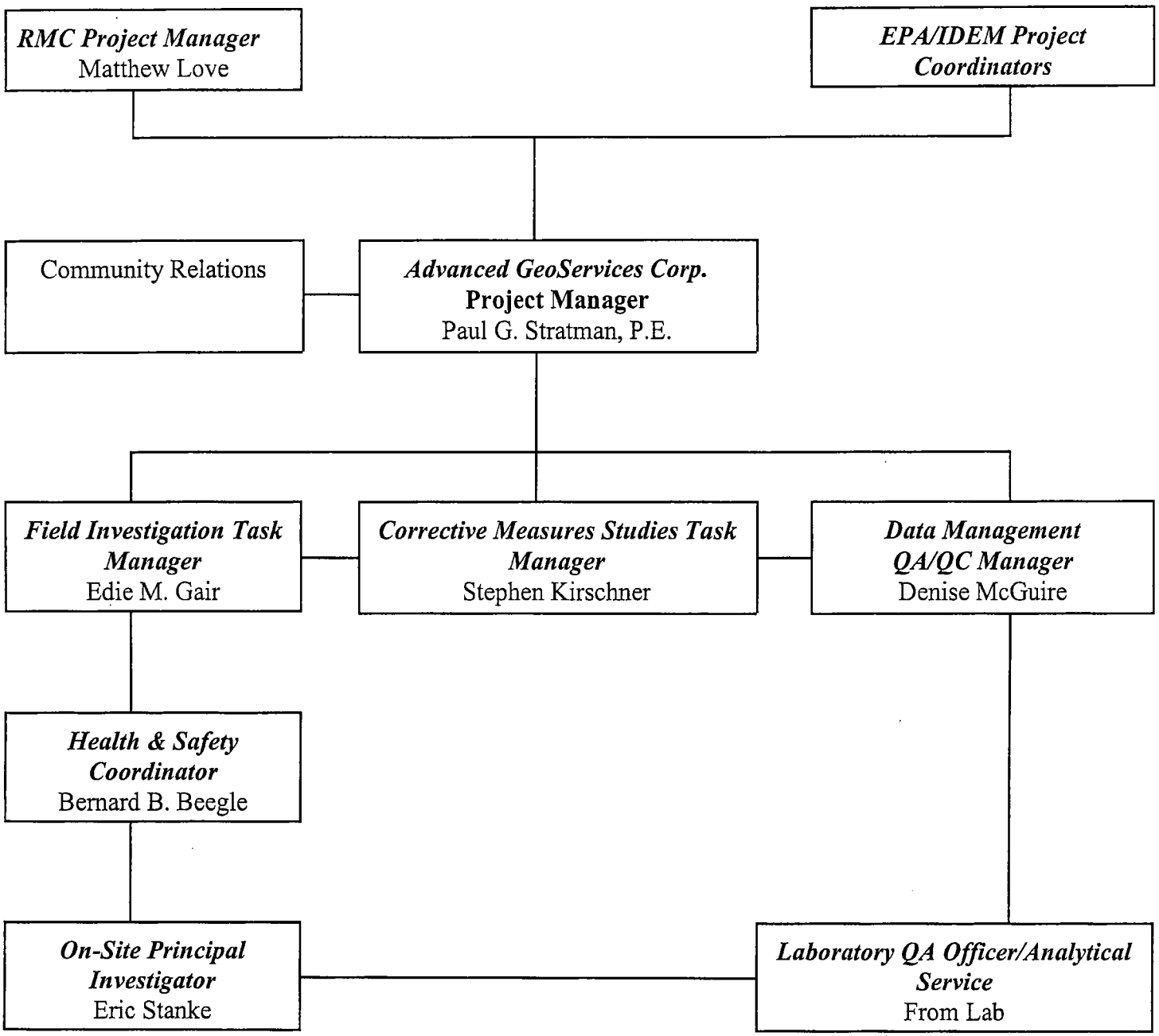

ATTACHMENT 1
AVAILABLE STATE RCRA INSPECTION REPORTS

STATE BOARD OF HEALTH

INDIANAPOLIS

OFFICE MEMORANDUM

DATE: July 20, 1984

TO: Refined Metals Corporation File

THRU: Janet Snedeker
Terry Gray TFG
Jim Hunt 8.1.84

FROM: Thomas Linson TEL

SUBJECT: Pre-closure Inspection

On July 13, 1984, Janet Snedeker and myself conducted a pre-closure inspection at Refined Metals Corporation, 3700 South Arlington Avenue, Beech Grove. The facility wants to go through closure for an on-site storage pile to obtain status as a generator only.

Refined Metals Corporation is a smelter of waste lead. They generate hazardous waste in the form of baghouse dust (7 tons/day) from their blast furnace. This dust is stored in an enclosed pile until it is reused. They also generate a secondary slag waste (6-7 tons/day) which they consider non-hazardous. This is stored outside directly on the earth. They did not have an analysis for this waste on-site. I believe that this waste may also be hazardous.

The operation appears to suffer from extremely poor housekeeping procedures. The ground around the baghouse was covered with a thick coating of lead dust. There is a possibility, by their own admission, that areas of the soil on-site may be contaminated with lead.

Refined Metals Corporation has not submitted an application for a State hazardous waste facility operating permit which is necessary for their operation.

I am recommending that a compliance inspection be conducted of this facility in order to combine other violations (on-site soil contamination, lack of analyses, etc.) with the lack of a State permit application.

TL/jb

IB1

STATE BOARD OF HEALTH

INDIANAPOLIS

OFFICE MEMORANDUM

DATE: July 17, 1985

TO: Refined Metals Corporation, Beech Grove Plant
RCRA File - IND 000718130

THRU: Richard Strong

FROM: David Koepper
Compliance Monitoring Section

SUBJECT: Complaint/Closure Inspection Trip Report
Interim Status G/TSD Inspection

Pre-Inspection File Audit

The file audit revealed several pieces of correspondence involved with inspections and subsequent Notices of Violation (NOV) issued on April 13, 1982, and July 30, 1982. The NOV activities appear to have been partially resolved, but no activity closeout was found. A letter denying their Part A withdrawal request unless closure of their waste pile storage was undertaken was also on file.

Inspection Findings

The inspection found several problems at the facility. The major problems revolve around the waste pile storage area and some other waste storage areas including the battery storage area, the area where soil from the wastewater treatment plant building excavation was stored, and several spillage areas around the buildings and the baghouses. Other problems are in the areas of inspection records, training records, contingency plan, operating record, and releases of waste pile runoff.

The waste at Refined Metals is placed in waste piles for the most part. The waste consists of waste from off-site, such as batteries, battery plates, reject material from manufacturers, emission control waste from vacuum filter systems, and fume control system waste. All of these wastes are high enough in lead content for reclamation. The facility also generates waste from the smelting operation including drosses, slag, and baghouse waste (K069), which are also stored in waste piles. Some of the off-site waste is received in drums and then dumped into the waste piles at some time. It would seem that the facility has both drum storage and waste pile storage.

Most of the waste to be processed is stored in the feed material storage building in waste piles and occasionally in drums. The building has a concrete floor in most places, but there are areas which are broken up or where the concrete is missing. Water runs through the building from the furnace building where it is used for dust control. The water is supposed to be caught in a sump, but the system is clogged and is overflowing the grates outside the building marked "grate" on the attached map. The main aisle which this water passes through is in especially poor condition and is, of course,

covered in the various wastes that are piled in the building. The dust the water suppresses is lead contaminated. The slag is stored in waste piles in the furnace building. Pictures of these areas are available.

The batteries are stored outside the building on paved areas in most cases. There are some batteries and/or battery cases on unpaved areas. Some of the batteries were spilling their contents on the ground or pavement and creating a runoff problem. Refer to the pictures of these areas.

The baghouse area had some evidence of spillage around it in both paved and unpaved areas. This spillage is a result of baghouse failures and cleanouts. The dust is normally transported directly to the storage building via a screw auger system and dumped into a waste pile inside.

Severals areas of possible contamination were noted other than those previously mentioned. There is a low area in the northeast portion of the site where runoff collects that should be examined. A pile of soil removed in preparation for building the new wastewater treatment/battery cracking building should be checked. Several areas showed evidence of old cracked battery cases sticking out of the soil and discoloration. Because of the nature of the facility, these areas should be considered.

The facility had some of the required RCRA paperwork, but several deficiencies were noted. The facility did not list storage in waste piles or containers on their Part A application. The inspection program was not following the schedule listed and was not noting repair completions. Repairs or remedial activities were not being done in the case of problems at the baghouse. Personnel training records did not indicate which employee filled job titles or whether they were trained for that position. The contingency plan was somewhat deficient in the areas of arrangements with local authorities, emergency coordinator, emergency equipment, and evacuation plan. The operating record could not indicate specific locations of wastes and the manifest cross-reference; also, it could not give the specific quantity of waste in storage.

Conclusions

The facility has some real environmental problems along with some waste tracking and personnel training violations. The facility has several areas of concern because of the environmental releases present there.

Recommendations

The facility should be issued a complaint. The complaint should address Part A violations, environmental releases and associated cleanups, groundwater monitoring, and all the RCRA violations.

Notes

1. The facility's basic business is the production of lead bar stock to the battery industry.

2. The storage building has bins to store dry dross from the kettle operations of alloying (east center) and refining (west center), and a bin for flash sintered bag dust (L-69) in the southeast corner. Baghouse dust is stored in a bin on the southwest corner of the building. Other bins store the lead scrap, battery plates, emission control dusts, fume control dusts, and other lead waste received from off-site for reclamation.

3. A cast iron bin stores iron for addition to slag to tie up sulfur. The iron comes off in the slag as iron sulfide, sulfate, and other compounds.

4. The battery case plastic is sold to MA Industries in Georgia.

5. The wastewater treatment plant uses magnesium hydroxide on sulfuric acid. The sludge goes to the furnace and the decant to the sewer.

6. Most of the outside storage area slops to the wastewater treatment building except for the northeast corner which drains off-site or to a low area situated there.

7. The southwest corner of the facility is used for empty drum staging. Several areas of possible contamination were noted there.

8. The facilities main waste/reclamation streams are batteries, battery plates, scrap from salvage operations like Ace Battery, reject material from manufacturers, vacuum filter emission control wastes, and fume control wastes.

9. The slag is sent to Southside Landfill after it has been run through the system several times. Hard rubber case scrap is burnt in the furnace along with plastic bags and any other residues from the operation.

DJK/gds
cc: Enforcement Section

State Form 4336

DEPART. ENT OF ENVIRONMENTA MANAGEMENT

INDIANAPOLIS

OFFICE MEMORANDUM

DATE: August 11, 1986

TO: Refined Metals Corporation, RCRA File
IND 000718130, Indianapolis, Marion County

THRU: Richard Strong

FROM: David Koepper
Compliance Monitoring Section

SUBJECT: Trip Report for the TSD Inspection Conducted on June 24, and July 1, 1986

This report covers the routine reclamation facility inspection of this lead waste processer. The facility is still involved in enforcement action resulting from the last inspection of June 18, 1985. Since the facility is involved in enforcement only new violations will be referred along with observations of items which have been corrected or improved.

Several items were noted during the physical inspection of the facility.

1. The materials storage building is getting a new roof.

2. Excess water is being pumped to waste treatment especially from the pad area on the northeast corner (see picture).

3. The sump at the northeast corner of facility is being replaced in the near future with a large sump or tank. A water treatment consultant is working on a recommendation which will be implemented as soon as possible.

4. Incoming palleted batteries are stored in trailers. Loose incoming batteries are sent directly to the breaker. Trailers were bought to store incoming palleted batteries. They are unloaded from the incoming trailer and then loaded into the storage trailer at the dock. Batteries are also stored at the dock area on the east side of the facility.

5. The temporary dock storage area has a blue color material spilled on it. The dock drains to the roadway which is pumped to the pond. Apparently the blue material was a dye which they took to extract lead. The stockpile of battery plates has been removed from the area next to the cracker/wastewater treatment plant building.

6. Small acid discharge was noted outside wastewater treatment plant door.

7. Bagdust is stored in a large pile in the middle of the materials storage building.

8. Slag is now stored in the materials storage building not in the furnace room.

9. An off-site discharge was found during the inspection. The west side of the facility is partially draining off onto the Citizens Gas facility. See the picture of this area for more detail.

The facility had two newly observed violations. The concrete lined pond on the east side of the facility received parking lot and dock drainage through an automatic sump in the driveway. Off-site drainage from a contaminated area was observed on the west side of the facility.

These violations along with other observations will be referred to the Enforcement Section.

DJK/drc
cc: Mr. Dennis Zawodni

DEPARTMENT OF ENVIRONMENTAL MANAGEMENT

INDIANAPOLIS

1B1

OFFICE MEMORANDUM

DATE: September 9, 1987

TO: Refined Metals Corporation
RCRA File

THRU: David Koepper DJK

FROM: Jeff Blankenberger
Compliance Monitoring Section

SUBJECT: Routine Interim Status Inspection on August 12, 1987, at Refined Metals, Inc.
3700 South Arlington Avenue
Indianapolis, Indiana
IND 0007108130.

On August 12, 1987, Messers Bruce Hamilton, Bob Steele and I conducted a routine interim status inspection at the above mentioned facility. A pre-inspeciton file audit revealed that an inspection on June 18, 1985, found the facility to be in violation of most of the interim status requirements. That inspection resulted in the issuance of a Complaint Order (N-283), which has not been resolved. A second inspection was conducted on June 24, and July 1, 1985. No new violaitons were noted, therefore no additional enforcement action was taken. A second separate enforcement action was taken in February 1987 relative to biennial report requirements.

Refined Metals Inc., was represented by Messers. Ron Widner, Plant Manager; John Saucerman, Safety Coordinator; and Ms. Judith E. Overturf, Harrison & Moberly. The facility is a lead smelter of scrap batteries and other miscellaneous lead scrap. They have interim status for the storage of hazardous waste in piles.

The following violations of the interim status standards were noted during the inspection:

- Lack waste analysis on Exide battery scrap.
- Waste analysis plan does not address hazardous waste from offsite.
- Not inspecting hazardous waste containers, spill control equipment.
- Inadequate inspection log.
- Inadequate personnel training records for supervisors and emergency coordinators.
- Inadequate contingency plan.
- Have not submitted unmanifested waste reports.
- No immediate access to communication device.
- Open containers of HW lead scrap.

Since April 15, 1987, the facility has received hazardous waste (D008) from Exide Corporation without a manifest. Scrap battery plates covered with lead oxide paste are shipped to Refined Metals. Also, between March 1987 and April 15, 1987, they received wastewater treatment sludge (D008) from Exide Corporation without a manifest. With the adoption of the new definition of hazardous waste on April 15, 1987, the lead waste is regulated and the WWT sludge is exempt.

In conclusion, the facility is still in violation of many interim status standards. One violation not previously addressed concerned the acceptance of hazardous waste from Exide Corporation without a manifest. Other violations with the inspection schedule and contingency plan are due to the fact that the facility does not consider certain waste stream as hazardous.

The Material Storage Building in no way could be considered a tank. Water from dust control was noted entering the building on the south side and exiting on the northside through open doorways. No berm or curb existed to contain the flow of water in the building. Also, it appeared that water flowed toward the middle of the building from the sides where K069 baghouse dust is stored.

The K069 storage area was not sloped in such a manner to provide containment.

A referral will be made to the Enforcement Section recommending that all new violations be included in the existing enforcement action in the form of an amended complaint.

JLB/rmw

cc: Mr. Dennis Zawodni, Enforcement Section

State Form 4336

DEPARTME T OF ENVIRONMENTAL M NAGEMENT

INDIANAPOLIS

OFFICE MEMORANDUM

DATE: October 7, 1988

TO: Refined Metals Corp. RCRA File
IND 000718130, Beech Grove, Marion County

THRU: Jeff Blankenberger

FROM: Lewis R. Schoenberger
Compliance Monitoring Section

SUBJECT: Trip Report for the Compliance Inspection of September 8, 1988

Refined Metals Corp. (RMC) is located at 3700 South Arlington Ave., Beech Grove, Indiana. The facility was represented by Mr. Ron Widner.

Preinspection File Audit

A preinspection file audit revealed that this facility had previously been inspected on August 12, 1987, and June 18, 1985. The 1985 inspection resulted in the issuance of complaint N-283 on December 13, 1985. No action addressing the August 12, 1987, inspection has been issued by this office. An NOV (442) was issued by the Department on February 16, 1987, concerning violations of the Biennial Report requirements. A Letter of Warning was issued to RMC on March 26, 1987. This Letter of Warning addressed the lack of financial assurance statements from RMC.

RMC has submitted a Part A Permit application that indicates that the facility has 200 cubic yards of waste pile storage capacity.

Inspection Findings

RMC is a reclaimer of lead scrap from junk lead acid batteries. The primary method of reclaimation is smelting of the lead.

During this inspection the following repeated violations were observed:

1. The facility does not maintain an operating record that provides the location and quantity of the hazardous waste stored on site.

2. Piles of lead waste are not protected from run-on.

3. Piles of lead waste do not have proper run-off control systems.

During this inspection the following new violations were observed.

1. The facility has exceeded their 200 cubic yard (40,400 gallons) waste pile storage capacity by storing 73,729 batteries (app. 73,000 gallons) plus several waste piles of lead waste that could not be measured at the time of this inspection.

2. Several waste pile storage units are used by the facility, however the location of these units has not been included on the facility's Part A Permit application. The units include a waste pile used for the storage of lead waste in the Material Storage Building and the storage of junk batteries in piles through out the facility.

3. The inspection log contains the inspectors initials, not his full name.

4. The inspection log does not include the date and nature of repairs for the phone P.A. system.

5. The emergency procedures outlined in the contingency plan address only emergencies that involve K069. None of the other hazardous wastes are addressed in the contingency plan.

6. RMC received the shipment accompanied by manifest INA0249861 and returned the manifest copies to the transporter and generator without having signed the manifest.

7. RMC has not submitted an unmanifested waste report for the shipments of EP toxic (D008) waste from Exide Corporation accepted without a manifest.

8. Waste piles of junk batteries are not protected from wind dispersal.

9. Waste piles of junk batteries are not protected from precipitation run on or run off.

10. Numerous broken batteries were observed in storage out of doors. The contents of these batteries has spilled onto the surrounding pavement.

11. RMC is acting as a burner of hazardous waste, but they have not notified the IDEM as a burner of hazardous waste.

Conclusions and Recommendations

As a result of this inspection several repeated violations were observed. Numerous new violations were also observed during this inspection. The results of this inspection will be referred to the Enforcement Section with the recommendation that a Notice of Violation be issued to this facility.

Because of the potential lead contamination of the water discharge from the on site pond and the sediments in this pond, it is the inspectors opinion that a coordinated sampling site investigation of this site should be conducted with the Office of Water Management.

LRS/lea

cc: Enforcement Section
Plan Review and Permit Section

9/19/88

State Form 4336

DEPARTME T OF ENVIRONMENTAL M NAGEMENT

INDIANAPOLIS

OFFICE MEMORANDUM

DATE: January 12, 1989

TO: Refined Metals Corp. RCRA File
IND000718130, Beech Grove, Marion County

THRU: Jeff Blankenberger JLB

FROM: Lewis R. Schoenberger
Compliance Monitoring Section

SUBJECT: Trip Report for the Sampling Site Inspection of November 16, 1988

Refined Metals Corporation, (RMC) is located at 3700 South Arlington Avenue, Beech Grove, Indiana. The Warrant of Entry, Inspection, and Investigation was served to Mr. Grady Wilson. Messrs. Dave Knight and Rick Shoulders were the facility representatives present while most of the samples were collected. Mr. Jeff Blankenberger accompanied me during this inspection.

Preinspection File Audit

Because this sampling site investigation was initiated as a result of the inspection conducted on September 8, 1988, a preinspection file audit was not conducted.

Inspection Findings

During this inspection, eight (8) soil samples and five (5) liquid samples were collected. Because the liquid in the pond was flowing through a ditch on-site to a ditch that runs along Arlington Avenue, several water and soil samples were collected from this series of ditches. Refer to the Sample Sheets for the exact time of collection and location of the samples.

Conclusions and Recommendations

Liquid from the pond does flow from the impoundment into ditches that flow off-site, into a ditch that flows along Arlington Avenue. This was observed on the day of inspection. Conclusions and recommendations that may be made as a result of this inspection will depend upon the results of these sample analyses.

LRS/sac

cc: Enforcement Section

12/2/88

State Form 4336

DEPARTM T OF ENVIRONMENTAL ANAGEMENT

INDIANAPOLIS

OFFICE MEMORANDUM

DATE: June 23, 1989

TO: Refined Metals Corp. RCRA File
IND 000718130, Beech Grove, Marion County

THRU: Jeff Blankenberger JLB

FROM: Lewis R. Schoenberger LRS
Compliance Monitoring Section

SUBJECT: Trip Report for the Compliance Evaluation Inspection of June 2, 1989

Refined Metals Corporation (RMC) is located at 3700 South Arlington, Beech Grove, Indiana. Mr. Phil Perry of the Plan Review and Permit Section accompanied me during this inspection. RMC was represented by Messrs. Ron Widner and John Saucerman.

Preinspection File Audit

A preinspection file audit revealed no significant changes since the last inspection. RMC has applied for an increase in their waste pile storage capacity. This application is currently under review. The outstanding enforcement actions, N-283 and V-442, have yet to be resolved. No enforcement action has yet resulted from the inspection that occurred on September 8, 1988. The results of the sampling site investigation are subject to the final review by the Chemistry Section. These analytical results indicate that every sample collected was EP Toxic.

Inspection Findings

No significant changes have occurred in the manufacturing operations at RMC, since the September 8, 1988, inspection.

During this inspection the following violations were observed.

1. RMC is operating container storage units (S01) throughout the plant and also in the plant parking lot without a permit.

2. RMC is operating a surface impoundment storage unit (S03) without a permit.

3. RMC has not obtained analyses of all of the hazardous wastes they handle in their storage areas.

4. RMC does not have a waste analysis plan.

5. RMC's inspection schedule does not address the daily inspection of the surface impoundment freeboard, nor the weekly inspection of the surface impoundment dikes.

6. RMC does not log the inspection of its gates.

7. RMC does not have job descriptions for the Labor, Blast Furnace Supervisor, Health and Safety Supervisor, nor the Scale Operator positions.

8. RMC's contingency plan does not include:

   a. responses to fires or explosions,

   b. a description of the arrangements agreed to by the Beech Grove Police Department, nor the Office of Emergency Response (OER),

   c. a list of emergency equipment that includes the emergency showers in the battery breaking area,

   d. a description of the signal that will be used to begin a plant evacuation.

9. RMC has not attempted to make arrangements with the OER in case of an emergency.

10. RMC has not provided copies of its contingency plan to the Beech Grove Police Department, nor the OER.

11. RMC has not estimated the cost of post closure activities for the surface impoundment and waste pile storage units.

12. The operating records for the waste pile and container storage units do not contain the appropriate handling code methods for these activities.

13. The operating records for the waste pile and container storage units are not cross referenced to specific manifest document numbers.

14. RMC does not maintain an operating record for the surface impoundment.

15. RMC has not implemented a ground water monitoring program.

16. RMC has not made a hazardous waste determination for the waste rubber.

17. RMC has stored 13 drums of D008 waste in open containers.

18. RMC has not maintained adequate aisle space between rows of containers.

19. Containers of hazardous waste have not been stored so they may be inspected without being moved.

20. Adequate aisle space between rows of containers was not maintained.

21. RMC does not maintain at least 60 cm (2 feet) of freeboard in the surface impoundment.

22. The waste piles in the Material Storage building are not protected from run on, and there are no run on or run off control systems for this pile.

23. RMC has not retained the TSD's copy of each manifested shipment. Instead they have retained the copy that was to have been sent to the State.

24. Red discolored stone east of the truck turn around area and reddish mud east of the battery breaking area were observed. These are areas where spillage of some material has occurred.

25. RMC is acting as a transporter without having notified the State of this activity.

Conclusions and Recommendations

The results of this inspection will be referred to the Enforcement Section with the recommendation that a Notice of Violation be issued to Refind Metals Corporation.

This memo shall also serve as a notice to the Plan Review and Permit Section of the visible evidence of spillage throughout the plant.

LRS/dkp

cc: Mr. Phil Perry
Enforcement Section

June 6, 1989

State F 13207 (2-89)

INDIANA DEPARTMENT OF ENVIRONMENTAL MANAGEMENT

INDIANAPOLIS

181

OFFICE MEMORANDUM

DATE: December 12, 1990

TO: Refined Metals Corporation RCRA File
IND 000718130, Beech Grove, Marion County

THRU: Bruce Kizer BCK 1/2/91

FROM: Robert Burke III RVB
Compliance Monitoring Section

SUBJECT: Trip Report for the Scheduled Inspection of September 27, 1990

An unannounced RCRA compliance inspection was conducted at the above-mentioned facility located at 3700 South Arlington Avenue. Mr. Ron Widner, plant manager, represented Refined Metals Corporation (RMC) during the inspection.

Preinspection File Audit

A preinspection file audit revealed no significant changes since the last inspection. That inspection was conducted on June 2, 1989. Currently two (2) separate enforcement actions N-283 and V-442, lack any resolution. The past inspection, along with two (2) previous inspections (9/8/88 and 8/12/87) found violations which have been noted in the outstanding actions.

RMC had applied for an amendment to their Part A for an increased storage capacity. This amendment was submitted on October 26, 1988. The increased size of storage was denied by our Office on September 20, 1989. RMC filed for a stay on the denial from our Office on October 10, 1989. Because the stay was granted, RMC has interim status to store 400 cubic yards of hazardous waste in piles. The storage area designated on the new Part A is the building in the northwest corner of the property.

Inspection Findings

Mr. Ron Widner provided me with a tour of the facility. RMC is still operating as a lead smelter of spent batteries and other miscellaneous lead waste. The following violations were observed during the inspection:

1. Storage of hazardous wastes outside of the designated area on the Part A.

2. RMC has been acting as a transporter of hazardous waste. The appropriate notification has not been submitted.

3. RMC does not have a waste analysis plan on-site.

4. Lack of daily free board inspections and weekly dike inspections for the surface impoundment.

5. RMC is operating a surface impoundment storage unit (S03) without a permit.

6. Inspection logs do not address repairs or remedial actions.

7. Lack of personnel training for employees within the first six (6) months of hire, and subsequent annual review of training.

8. Not submitting manifests to our office within five (5) working days.

9. RMC has not estimated the cost of closure and post-closure activities for the surface impoundment and waste pile storage units.

10. Lack of a closure plan for the above-mentioned units.

11. RMC does not have an operating record for hazardous waste units managed on-site.

12. RMC has not implemented a groundwater monitoring system for the surface impoundment.

13. Rubber from broken batteries is stored in piles and lack any hazardous waste determinations.

14. The containers with lead waste lacked adequate aisle space.

15. The containers (spent batteries) could not be inspected.

16. The waste piles in the battery cracker building are not protected from run-on and there are no run-on and run-off control systems for these piles.

17. Sediment removed from the surface impoundment did not have a hazardous waste determination.

The entire property surrounding the buildings now has concrete or asphalt pavement on the ground. The area around the impoundment is still soil with a vegetative cover. The areas north and west of the buildings have concrete dikes or berms, which direct precipitation to the sumps. According to Mr. Widner, all of the sumps now discharge to the wastewater treatment plant, except one. The lone exception is the sump located west of the impoundment. Per Mr. Widner, the impoundments run-off is directed to the wastewater treatment plant.

Conclusions and Recommendations

The results of the inspection revealed several violations regarding interim status compliance. A referral will be made to the Enforcement Section

recommending that all new violations be addressed in a Violation Letter. The repeat violations will record how long RMC has been out of compliance with the two (2) outstanding enforcement actions.

RFB/rmw

cc: Mr. Phil Perry, Plan Review and Permit Section

10/15/90

46(R)

INTRODUCTION

RELEVANT INFORMATION

Facility:	Refined Metals, Inc. 3700 South Arlington Avenue Indianapolis, Indiana 46107
EPA ID No.:	IND 000718130
Contact:	Mr. Ronald Widner, Plant Manager Refined Metals, Inc.
Phone No.:	317/787-6364
Inspector:	Robert Malone, Project Manager, Ontario Environmental
Phone No.:	317/237-3600

PROJECT BACKGROUND

Ontario Environmental, Inc. (Ontario), received Purchase Order No. 91611481 from the Indiana Department of Environmental Management (IDEM) to conduct Resource Conservation and Recovery Act (RCRA) compliance evaluation inspections (CEI) in Indiana. As part of this assignment, Ontario conducted a CEI at the Refined Metals, Inc. (Refined Metals), facility in Indianapolis, Indiana.

The objective of the CEI was to determine facility compliance with applicable portions of the hazardous waste management regulations of the Indiana Administrative Code (329 IAC 3.1), corresponding federal regulations (40 CFR Parts 261, 262, 265, and 266), and federal land disposal restrictions (LDR) (40 CFR Part 268).

Before conducting the CEI, Ontario conducted a preinspection file audit on June 25, 1992. IDEM officials previously provided Ontario with copies of state and federal checklists to be completed during the CEI. During the file audit, Ontario completed the preinspection file audit checklist, photocopied relevant material, and became acquainted with the facility's operations and regulatory history.

On June 29, 1992, Ontario conducted an unannounced CEI at the Refined Metals facility. The following personnel were present during the inspection:

Ronald Widner Plant Manager, Refined Metals

John Saucerman	Safety Coordinator, Refined Metals
Robert Malone	Project Manager, Ontario Environmental

Ontario interviewed facility personnel, reviewed facility records, evaluated facility waste management record keeping, and inspected facility waste management operations. Ontario completed applicable checklists to assist in the compliance evaluation. Ontario also took photographs of facility operations as they relate to waste management and inspection findings.

This report describes the inspection findings and evaluates the facility's regulatory compliance. The completed checklists are provided in Appendix A, Field notes are provided in Appendix B, Photographs are provided in Appendix C and References are included in Appendix D.

2.0 FACILITY BACKGROUND

The following subsections describe the facility's location, operations, and regulatory status and history.

2.1 FACILITY LOCATION

Refined Metals is located at 3700 South Arlington Avenue, Indianapolis, Indiana. The area surrounding the facility is primarily industrial in nature (See Figure 1).

2.2 FACILITY OPERATIONS

Refined Metals operates a lead acid battery cracking operation and a lead smelting operation. The facility receives automotive and industrial lead acid batteries at the Site, cuts them open, treats the electrolyte (acid) solution from the batteries and retrieves the lead plates and smelts them on-site. The facility also buys scrap lead and lead laden waste streams, which it then accumulates, and then smelts on-site. During the time while the facility is storing the lead plates, the facility stores them in regulated waste piles. The battery plates are initially accumulated in a pile in the battery cracker area and are then moved to the warehouse. In addition, the facility has lead waste, lead scrap and slag piles in the warehouse on-site and a surface impoundment on-site that collects facility run-off. The facility was not conducting any container storage at the time of the inspection other than the storage of batteries prior to cracking. The facility indicated that sludges from the surface impoundment were smelted in the on-site smelter due to their high lead content. A site drawing depicting the facility operations is included as Figure 2.

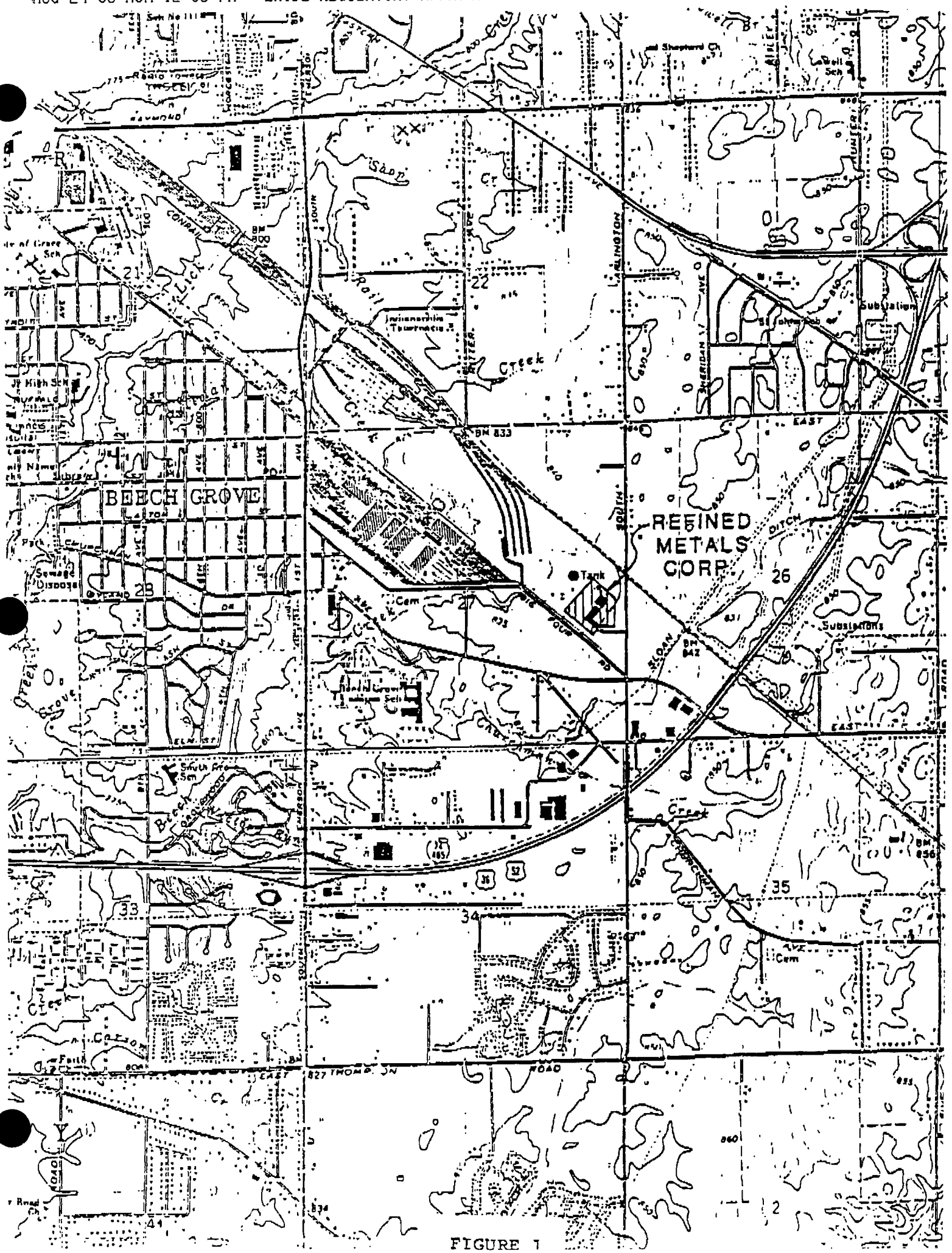
BEECH GROVE
REFINED METALS CORP.
Tank
Creek
Substation
Substations
Sewage Disposal
Cem
Jr High Sch
Shop
Rail
Lick
Beech
Creek
Carson
Faith
EAST
THOMPSON
ROAD
SOUTH
ARLINGTON
SHERIDAN
DITCH
SLOAN
BM 833
BM 842
BM 856
21
22
23
26
27
33
34
35
41
2

FIGURE 1

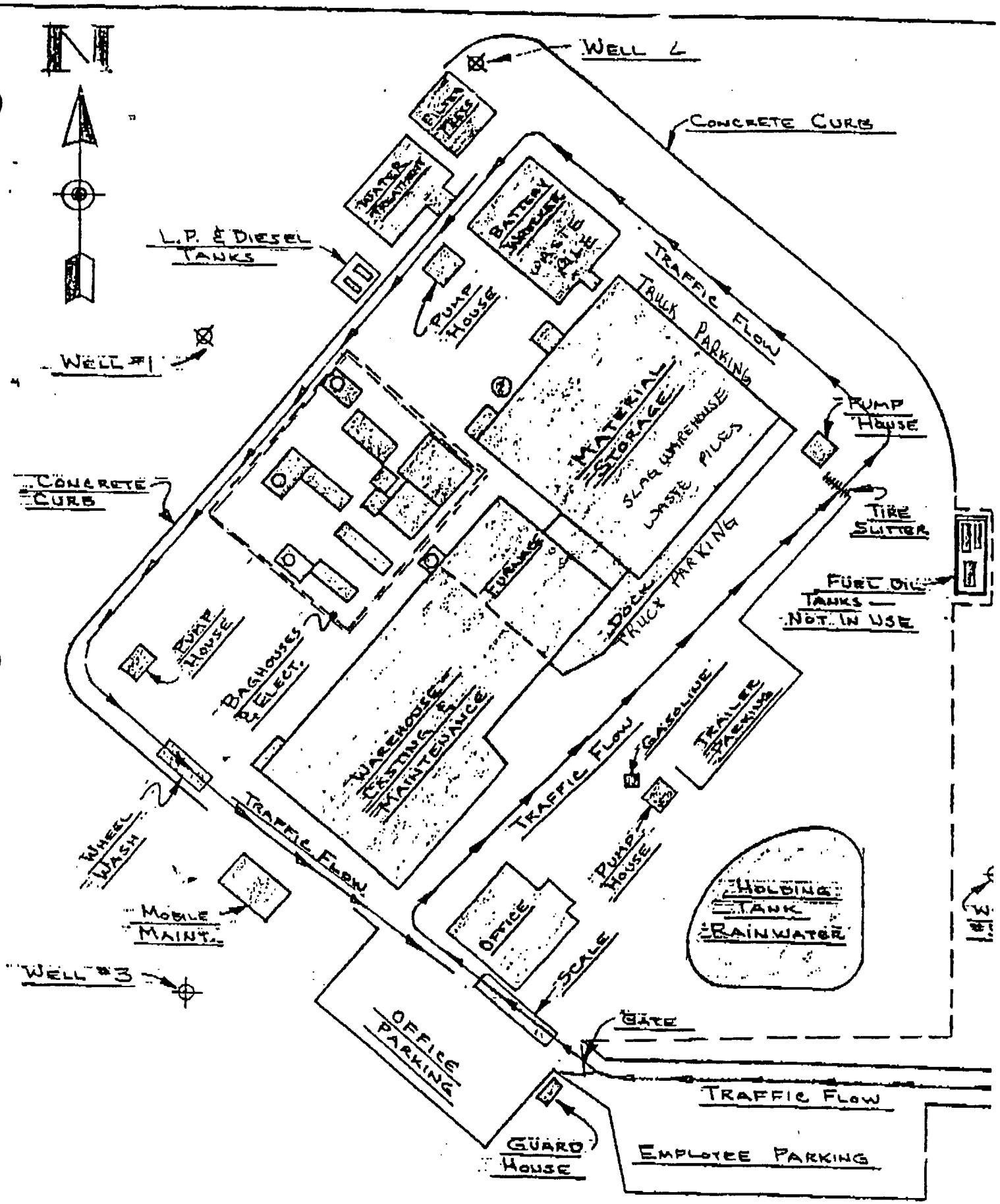

REFINED METALS CORP.
PLANT LAYOUT
BEECH GROVE, IND.
DWG. #BG-92-100-2 — 1-9-92

FIGURE 2

2.3 FACILITY REGULATORY STATUS

The storage of the spent battery plates in piles is regulated under the hazardous waste rules as storage in waste piles. The facility is also regulated for the storage of batteries (containers). In addition, the facility surface impoundment is also regulated as a hazardous waste surface impoundment (D008). No significant changes have occurred in facility operations since the last inspection.

Compliance History

The facility contends that the waste piles and surface impoundment at the site do not meet those regulatory definitions. The facility contends that the surface impoundment is a tank and the waste piles are container storage. The facility is currently in violation of most interim status hazardous waste management requirements for the waste piles and the surface impoundment. Therefore, the facility chooses not to comply with a majority of the hazardous waste management rules for these units. The facility is currently under formal enforcement for these units. Enforcement actions have not been issued for the most recent inspections at the facility because the violations have already been addressed in the formal enforcement with the facility.

3.0 WASTE STREAMS

Refined Metals accepts three hazardous waste streams from off-site. These include lead acid batteries (battery plates) (D008), scrap (lug) lead (D008), and flue dusts hazardous for lead (D008). The facility generates hazardous waste streams during their process. They include spent battery electrolyte solution (acid D002), blast slag (D008), and baghouse dust (K069). The facility operates an waste water treatment system that treats wastewater before releasing it to the local sanitary sewer. The blast slag is sent off-site for disposal at a hazardous waste landfill after stabilization.

4.0 INSPECTION FINDINGS

The CEI consisted of an entrance meeting, records review, facility inspection, and interviews with facility personnel. Significant findings are discussed below.

According to information Ontario Environmental obtained during the inspection, Refined Metals was operating as a TSD of hazardous waste for waste piles, container storage (batteries) and a surface impoundment. No other hazardous waste container storage was occurring at the time of the inspection. Violations at the time of the inspection included inspection schedule and inspection log deficiencies, training record deficiencies, and contingency plan deficiencies.

5.0 SUMMARY OF FINDINGS AND REGULATORY DETERMINATIONS

Ontario inspected Refined Metals as a RCRA TSD facility. During the inspection, Ontario identified the following IAC violations:

1. The facility inspection schedule does not address dikes on the hazardous waste surface impoundment in violation of 329 IAC 3.1-10-1 referencing 40 CFR 265.15(b). The facility shall modify the facility inspection schedule to address inspection of the surface impoundment dikes. Based on statements made by facility employees, the inspections on the surface impoundments have been conducted, but no notation has been made of the inspections on the inspection log sheets. The facility shall modify their inspection practices to include the surface impoundment in their inspection schedule and include all inspection findings in their inspection log.

2. The facility inspection records were not completed when Mr. John Saucerman was on vacation in violation of 329 IAC 3.1-10-1 referencing 40 CFR 265.15(d). Based on statements made by facility personnel, the inspections were conducted. Facility personnel shall complete inspection logs after conducting hazardous waste inspections.

3. Facility personnel training record job descriptions did not specifically describe hazardous waste job activities in violation of 329 IAC 3.1-10-1 referencing 40 CFR 265.16(d). The facility shall revise personnel training record job descriptions to describe specific hazardous waste job duties.

4. The contingency plan did not include a brief outline of the emergency equipment capabilities in violation of 329 IAC 3.1-10-1 referencing 40 CFR 265.52. The facility shall revise the contingency plan to include this information.

Violations cited previously regarding the unpermitted waste piles have not been addressed here since they have already been addressed under the formal enforcement action. In addition, a copy of a manifest dated May 19, 1992, included the copy that the TSD should have forwarded to the State. IDEM should confirm that a copy of this manifest has been received from CWM, or cite CWM for a violation if no such copy has been received.

TSD - RCRA INSPECTION REPORT

(Interim Status Facility - 329 IAC 3.1.10)

EPA ID # IND 000 718 130 **NAME** Refined Metals Corporation

MAILING ADDRESS: P.O. Box 188

Beech Grove, Indiana 46107

LOCATION ADDRESS: 3700 South Arlington Avenue

Beech Grove, Indiana 46107

CONTACT: Mike Meloy **PHONE:** (317) 787-4419

OWNERSHIP: Refined Metals Corporation **COUNTY:** Marion

STATUS CODE: 1

1=Active 3=Dead Mail 4=PCB Handler
6=Non-Handler 2=Obsolete ID # 9=Superfund site
5=Out-of-Business

Person(s) interviewed:	Title:	Telephone:
Mike Meloy	Plant Manager	(317) 787-4419
John Saucerman	Safety Coordinator	(317) 787-4419

Inspector(s):	Agency:	Telephone:
Christina Halloran	IDEM	(317) 232-8552

Date of inspection: March 26, 1993 **Time of Inspection:** 9:00AM

Hazardous Waste Management Permit Program and Related Hazardous Waste Requirements, 329 IAC 3.1, incorporates by reference federal standards for the management of hazardous waste which have been published in the code of federal regulations in 40 CFR 260 through 40 CFR 270 as of July 1, 1990. Citations contained in this inspection form shall be to the federal rules as incorporated, except where the State rule substitutes full text language, in which case the specific 329 IAC 3.1 citation will be used.

Installation Processes by Process Code (EPA Form 3510-3)

S01	___	Container storage	T03	___	Incinerator treatment
S02	___	Tank storage	T04	___	Other treatment
* S03	✓	Waste pile storage	D79	___	Injection well disposal
S04	___	Surface impoundment storage	D80	___	Landfill disposal
T01	___	Tank treatment	D81	___	Land application disposal
T02	___	Surface impoundment treatment	D83	___	Surface impoundment disposal

If Part A process codes are listed above as T04 please describe the process involved below:

* Part A application addresses this as a container storage

A. GENERAL INFORMATION

1) Indicate any hazardous waste processes, by process code, which have been omitted from Part A of the facility's permit application.

S01, S04?

2) Indicate any hazardous waste processes (by process code and line number on EPA Form 3510-3 page 1 of 5) which appear to be eligible for exclusion per 40 CFR 265.1(c). Provide a brief rationale for the possible exclusion.

3) Type of Operation, Products Manufactured, Processes Utilized, Size of Operation, Concentrate on processes that produce waste (hazardous or nonhazardous)!

Secondary lead smelter, reclaims spent lead acid batteries, spent lead scraps, and sludges. During this inspection only operation taking place was casting. Currently eight employees. The plant operations were shut down. At this time most spent lead acid batteries and spent lead waste is being shipped off-site to their plant in Memphis, TN.

4) If any of the wastes are managed in the manners listed below, please check those areas and utilize the provided appendices.

		YES	NO
a)	Waste Oil Fuel	___	✓
b)	Hazardous Waste Fuel	___	✓
c)	Tanks	___	✓
d)	Container Management	✓	___
e)	Generator Accumulation	✓	___
f)	Waste Pile	✓	___

	YES	NO
g) Surface Impoundment	✓	
h) Landfill		✓
i) Process Vents		✓
j) Equipment Leaks		✓

5)

Hazardous Waste Streams/EPA #	Source	Rate	Disposition	LDR Treatability Group (WW/NWW)
Lead acid batteries	off-site		reclaimed on site	
Dust Slag (K069)	on-site baghouses		recycled on site	
Slag (D008)	from Blast Furnace	760 Tons	Adams Center Landfill	
Steel case battery plates	off-site		reclaimed	
Lead waste	off-site battery cracking		reclaimed on site	
D001	Parts Cleaner	~30 gal every 3 months (during normal plant operation)	Safety Kleen	NWW

	YES	NO	NA
6) Have both listed and characteristic waste codes been assigned, where a listed waste exhibits a characteristic? 40 CFR 268.9			✓
7) Does the facility handle any California List Wastes? (liquid hazardous waste with greater than 50 ppm PCB, greater than 134 ppm nickel, greater than 130 thallium, etc.)			✓

8) List all wastes not listed above.

Waste	Process Generating Waste	Rate	Disposition
steel scrap	battery casings	varies	blast furnace
iron scrap	batteries	varies	blast furnace
WWTP sludge	acid from battery cracking plant run-off run-on	varies	blast furnace
dross-hard lead	skimmings off furnace & kettles	varies	" "
plastic	battery cracking	varies	washed & shipped to plastic manufacturer for recycling
steel drums	plant scrap	varies	Blast furnace w/ a flux

9) If the company claims a reuse or reclaim exemption please include the following information:

	Waste Type	Generation Rate	How reclaimed & by Who	Quantity stored on Site
A.	lead bearing waste	varies	Blast furnace on site	WWT sludge, Dross - hard lead, slag
B.				

10) Hazardous Waste

* See Additional Comments Below and Attachment A

On-Site	Amount	How Stored	Comments
Industrial plates + cells	69,720 lbs 224,100 lbs	wrecker Bin 8 - Pile	
K069 Dust Slag	241,500 lbs	pile	fed into blast furnace
D008	761 Tons	pile	Adams Center Landfill
auto batteries	335,925 lbs	Trailers	* During inspection plant shut down. all waste is being transported to Refined Metals Corp in Memphis TN
Steel case batteries	321,600 lbs	Trailers	
D008	8	55 gal Dm	
shavings	3	55 gal Dm	
Lead Dross	1	55 gal Dm	

11) Indicate any TSD activities which have been omitted from or are not clear on the facility map (for the purpose of determining if expansion has occurred)
(40 CFR 270.13) (HWIMS 610)

12) Is the Biennial Report Accurate? appears to be

13) Note any non-RCRA Violations (Open Dumping, Dumping in City Sewer Without Pretreatment Program, OSHA, etc.)

none observed

14) Additional Comments:

* Inorganic Lead 14 55 gal Drums
* 18 55 gallon Drums from Yuasa-Exide (Lead shaving + Dross)

B. LAND BAN TREATMENT STANDARDS

	(HWIMS 700)	OK	DF	NI	NA
1)	Does generator dilute prohibited wastes to meet treatment standard criteria, or render them nonhazardous, as a substitute for adequate treatment? 40 CFR 268.3	No			
2)	Do treatment standards for listed wastes cover constituents that may cause the waste to exhibit any characteristics? 40 CFR 268.9				✓
3)	Does generator specify alternative treatment standards for lab packs or F039 leachate? If yes, see 40 CFR 268.42(c)(2)				✓
4)	Does generator mix wastes with different treatment standards for a constituent of concern?	No			✓
	a. If yes, did generator select most stringent treatment standards?				✓
5)	Does the generator handle any wastes with a LDR variance (national capacity, case-by-case, etc.)?	No			✓

C. ON-SITE TREATMENT (HWIMS 700)

1)	Does the generator treat wastes in 90-day tanks or containers? If NA, go to next section.	No			
2)	Does the generator treat the wastes to meet appropriate treatment standards?				✓
	a. If yes, has the generator prepared a waste analysis plan detailing the frequency of testing to be conducted? 40 CFR 268.7(a)(4)				✓
3)	Does the plan fulfill the following:				
	a. Based on a detailed chemical and physical analysis of a representative sample				✓
	b. Contains information necessary to treat the wastes in accordance with LDR				✓
4)	Has the plan been filed with the Regional Administrator or IDEM?				✓

	OK	DF	NI	NA
5) Are characteristic wastes which have been rendered nonhazardous shipped to a solid waste facility?				✓
a. If yes, is a notification and a certification for each shipment sent to the Regional Administrator (prior to 2/24/92) or IDEM? 40 CFR 268.9(d)(1) and 268.7(b)(5)				✓

D. STORAGE (HWIMS 700)

1) Is the amount of hazardous waste in the storage area(s) equal to or less than the capacity allowed in the Part A? List type and amount of any storage capacity overages? 40 CFR 270.72	✓			
2) Are all containers clearly marked to identify the contents and date(s) entering storage or is such information available in the operating log? 40 CFR 268.50(a)(2)(i)				✓
3) Have wastes been stored for less than one year?				✓
a. If no, can the facility show that such storage is necessary to facilitate proper recovery, treatment or disposal. 40 CFR 268.50(c)				✓

E. TREATMENT (HWIMS 700)

1) Does the facility treat hazardous waste other than in 90-day tanks and containers? If NA, go to next section.				✓
2) Are required technologies used to treat wastes which have treatment standards expressed as technologies? 40 CFR 268.40(b) (HWIMS 700)				
3) Are alternative methods approved? 40 CFR 268.2				
4) Is the LDR treatment standard lower than the Characteristic level?				
a. If yes, does the facility manage the waste as restricted until treatment standards are met? 40 CFR 268.9				
5) Does the facility test residues from all treatment processes? 40 CFR 268.7				

F. REQUIRED NOTICES

	OK	DF	NI	NA
1) Has the Regional Administrator/Environmental Management Board been notified regarding:				
a. Receipt of hazardous waste from a foreign source? 40 CFR 265.12(a) (HWIMS 300)				✓
b. Facility expansion? 40 CFR 270.72(b) (HWIMS 610)				✓
c. Change of owner or operator? 40 CFR 265.12(b) (HWIMS 300)				✓

G. GENERAL WASTE ANALYSIS: (HWIMS 310)

	OK	DF	NI	NA
1) Has the owner or operator made a detailed chemical and physical analysis of the waste either through testing or knowledge of the process? 40 CFR 265.13(a)1 — Pending previous Enforcement action Civil action No. IP 90-0077C			✓ See Item	
2) Does the owner or operator have a detailed waste analysis plan on file at the facility? 40 CFR 265.13(b)			✓	
3) Does the waste analysis plan contain:				
a. parameters (and rationale for their choice)			✓	
b. test methods			✓	
c. sampling method for representative sample			✓	
d. frequency of analysis (and rationale)			✓	
e. off-site only: waste analysis from generators				
f. Additional waste analysis needed for: change in waste type or process occurs)				
i. 265.200 Tanks				
ii. 265.225 Impoundment				
iii. 265.252 Waste Pile				
iv. 265.273 Land Treatment				
v. 265.341 Incinerators			✓	

			DF	NI	
vi.	265.375 Thermal Treatment			✓	See
vii.	265.402 Other Treatment				
viii.	268 LDR Standards				

4)	Does the waste analysis plan specify procedures for inspection and analysis of each movement of hazardous waste from off-site? 40 CFR 265.13(c)			✓	
5)	Is the waste analysis plan followed?			✓	

H. GENERAL INSPECTION REQUIREMENTS (HWIMS 320)

1)	Does the owner or operator inspect the facility for deterioration, malfunctions, operator errors, and discharges of hazardous waste that may affect human health or the environment? 40 CFR 265.15(a)	✓			
2)	Does the owner or operator have an inspection schedule at the facility? 40 CFR 265.15(b)2	✓			
3)	If so, does the schedule address the inspection of the following items: 40 CFR 265.15(b)1				
	a. monitoring equipment?				✓
	b. safety and emergency equipment?	✓			
	c. security devices (including fences)?	✓			
	d. operating and structural equipment (ie. dikes, pumps, etc.)?	✓			
	e. type of problems to be looked for during the inspection (e.g. leaky fittings, defective pump, etc.)? 40 CFR 265.15(b)(2)	✓			

	OK	[illegible]	[illegible]	NA
f. inspection frequency (based upon the possible deterioration rate of the equipment)? 40 CFR 265.15(b)(4)	✓			
g. Does the inspection frequency include:				
i. Weekly container storage? (See 265.174)	✓			
ii. Daily and Weekly Tank Storage? (See 265.195)				✓
iii. Daily freeboard and weekly dike inspection for surface impoundments? (See 265.226)	✓			
iv. Landfills, Waste Piles, Thermal treatment, Chemical, Physical, and Biological treatment should be inspected as determined by deterioration rate and daily at loading and unloading areas (where spills are likely) [See 265.15(b)(4)				✓
4) Does Owner or Operator follow the written inspection schedule as outlined? 265.15(b)(1)	✓			
5) Are areas subject to spills inspected daily when in use? 265.15(b)(4)	✓			
6) Does the owner or operator maintain an inspection log or summary of owner or operator inspections? 40 CFR 265.15(d)	✓			
7) Does the inspection log contain the following information: 40 CFR 265.15(d)				
a. the date and time of the inspection?	✓			
b. the name of the inspector?	✓			

	OK	DF	NI
c. a notation of the observations made?	✓		
d. the date and nature of any repairs or remedial actions?	✓		

I. PERSONNEL TRAINING

1) Do personnel training records include: (HWIMS 330)

	OK	DF	NI
a. Job titles for the positions related to HWM 40 CFR 265.16(d)1	✓		
b. The name of the employees filling each job title? 40 CFR 265.16(d)(1)	✓		
c. Job descriptions including the required skills, education, or other qualifications and the duties of the personnel assigned to the position? 40 CFR 265.16(d)2		✓ See Item 1	

Check categories for which job titles/descriptions are available (please include the supervisors of each category in that category when reviewing documents).

Emergency coordinator ✓ Training coordinator ✓ Emergency response personnel ___
Inspectors ✓ Material handlers ✓ Container labelers ✓ Manifesters ✓
Recordkeepers ✓

	OK	DF	NI
d. Description of both introductory and continuing training required for each job? 40 CFR 265.16(d)(3)	✓		
e. Records of training required in (d)? 40 CFR 265.16(d)4	✓		

Describe in general the type of training program in use at the facility.

Classroom and on the job
June 8 1992 - Hazardous Material Communication

f. Did facility personnel receive the required training including:

	OK	DF	NI	NA
i) classroom or on the job	✓			
ii) within 6 months of hire	✓			
iii) annual review of training?	✓			
g. Are all training records maintained for current personnel and for least three years for former employees? 40 CFR 265.16(e)	✓			

J. CONTINGENCY PLAN AND EMERGENCY PROCEDURES (HWIMS 350)

1) Does the Contingency Plan contain the following information:

	OK	DF	NI	NA
a. The actions facility personnel must take to comply with 265.51 and 265.56 in response to fires, explosions, or any unplanned release of hazardous waste? (If the owner has a Spill Prevention, Control, and Countermeasures (SPCC) Plan, he needs only to amend that plan to incorporate hazardous waste management provisions that are sufficient to comply with the requirements of this Part (as applicable).	✓			
b. A description of arrangements agreed by local police departments, fire departments, hospitals, contractors, and State and local emergency response teams to coordinate emergency services.	✓			
c. Names, addresses, and phone numbers of all persons qualified to act as emergency coordinators?	✓			
d. A list of all emergency equipment at the facility which includes the location and physical description of each item on the list and a brief outline of its capabilities? 40 CFR 265.52(e)	✓			

	OK	DF	NI	N
e. An evacuation plan for facility personnel where there is a possibility that evacuation could be necessary? (This plan must describe signal(s) to be used to begin evacuation, evacuation routes, and alternate evacuation routes.) 40 CFR 265.52(f)	✓			

2) Emergency Coordinator:

a. Is the facility Emergency Coordinator identified? 40 CFR 265.52(d)		✓ See Item #:		
b. Is coordinator familiar with all aspects of site operation and emergency procedures? 40 CFR 265.55	✓			
c. Does Emergency Coordinator have the authority to carry out the Contingency Plan? 40 CFR 265.55	✓			

K. PREPAREDNESS AND PREVENTION

1) Has the owner or operator attempted to make arrangements with local authorities in case of an emergency at the facility? 40 CFR 265.37 (HWIMS 340)	✓			
2) Are copies of the Contingency Plan available at the site and local emergency organizations? 40 CFR 265.53 (HWIMS 350)	✓			

3) Emergency Procedures

If an emergency situation has occurred at this facility, has the Emergency Coordinator followed the emergency procedures listed in 40 CFR 265.56 (329 IAC 3-18-7)? (HWIMS 350) none occurred ✓

L. MANIFEST SYSTEM (off-site facilities)

(HWIMS 360)

	OK	DF	NI	NA
1) Does the facility follow the procedures listed in 265.71 for processing each manifest? (Particularly sending a copy of the signed manifest back to the generator within 30 days after delivery.)	✓			
2) Are records of past shipments retained for three (3) years? 40 CFR 265.71(b)5	✓			
3) Has the facility submitted copies of hazardous waste manifests to the Department within five (5) working days after receiving hazardous waste? (This requirements applies to both Indiana's and other states hazardous waste manifests)?	✓			
4) Does the owner or operator meet requirements regarding manifest discrepancies? (Off-site facilities only) 40 CFR 265.72	✓			
5) Unmanifested Waste Reports:				
a. Has the facility accepted any hazardous waste from an off-site generator subject to 329 IAC 3.1-7-3 (3-8-1) without a manifest or shipping paper? No 40 CFR 265.76	✓			
b. If "a" is yes, provide the identity of the source of the waste and a description of the quantity, type and date received for each unmanifested hazardous waste shipment.				

c. Has the facility submitted an unmanifested waste report within 15 days after receiving the waste? — — — ✓

M. CLOSURE/POST CLOSURE

	OK	DF	NI	NA
1) Is the closure plan available for inspection? 40 CFR 265.112(a) (HWIMS 390)	✓			
2) Is the post-closure plan available for inspection? (for disposal facilities only) 40 CFR 265.118(a) (HWIMS 390)				✓
3) Has the closure cost and post closure cost estimate been revised annually to account for inflation. (329 IAC 3.1-14-3) (HWIMS 400) $ 733,452	✓			

N. OPERATING RECORD (HWIMS 370)

	OK	DF	NI	NA
1) Does owner or operator have a operating record? 40 CFR 265.73(a)	✓			
2) Does the owner or operator maintain an operating record that contains the following information?				
a. The method(s) and date(s) of each waste's treatment, storage, or disposal as required in 40 CFR 265 Appendix I (including tanks)? 40 CFR 265.73(b)(1) Facility has a Unmanifested Waste Tracking System		✓ See Item #		

Summarize how the facility tracks the method and date of TSD activity.

Unmanifested Waste Code / Date Received / Quantity / Waste Type / Date of Storage in Regulated Unit / Date Moved from Regulated Unit / Date stored in Raw Material B / Time Stored During Recycling (Hours) / Date Recycled in furnace / Comments

b. The location and quantity of each hazardous waste within the facility? (This information shall be cross referenced to a specific manifest number if the waste was accompanied by manifest.) 40 CFR 265.73(b)(2)		✓ See Item #1	

Summarize how the facility tracks the location and quantity of waste.

Same as above - does not cross reference with a manifest number when applicable

c. A map or diagram of each cell or disposal area showing the location and quantity of each hazardous waste? (This information should be cross referenced to specific manifest number, if accompanied by a manifest.) 40 CFR 265.73(b)(2)				✓
d. Records and results of all waste analyses, trial tests, monitoring data, and operating inspections, including those conducted for LDR standards? 40 CFR 265.73(b)(3)(5)(6)	✓			
e. Reports detailing all incidents that required implementation of the Contingency Plan? 40 CFR 265.73(b)(4)				✓
f. All closure and post closure costs as applicable? 40 CFR 265.73(b)(7)	✓			

g. Copies of LDR notifications and certifications?
40 CFR 265.73 b (11)(13)(15) ✓

O. GROUNDWATER MONITORING

Complete this section for facilities that treat, store, or dispose of hazardous waste in landfills, surface impoundments and/or by land treatment.

		OK	DF	NI	NA
1)	Has the owner or operator of the facility implemented a groundwater monitoring system? 40 CFR 265.90(a) (HWIMS 380)	✓			
2)	Has the owner or operator of the facility implemented an alternate groundwater monitoring system as described in 265.90(d)? (HWIMS 380)				✓

GENERATOR REQUIREMENTS

Complete the following sections if the owner or operator of a TSD facility also generates hazardous waste that is subsequently shipped off-site for treatment, storage, or disposal.

P. MANIFEST SYSTEM (generator) (HWIMS 110)	OK	DF	NI	NA
1) For hazardous waste shipments to Indiana facilities (or hazardous waste shipments to states that do not supply manifests) has the generator used the Indiana Hazardous Waste Manifest? 329 IAC 3.1-7-4		See Item #6		
2) Does the operator have copies of the manifest available for review? 40 CFR 262.40 (329 IAC 3.1-7-6)	✓			
3) Have manifests been retained for 3 years? (40 CFR 262.40)	✓			
4) Examine manifests for shipments in past 6 months. Indicate approximate number of manifested shipments during that period.	TMTC			
5) Do the manifest forms examined contain the following information? 40 CFR 262.21 (329 IAC 3.1-7-8)				
a. Manifest document number? EPA ID No. + Unique 5 digit No.? (five digit unique number)	✓			
b. Name, mailing address, telephone number, and EPA ID number of generator?	✓			
c. Name, telephone number (3.1-7-11) and EPA ID Number of Transporter(s)?	✓			
d. Name, Address, telephone number (3.1-7-11) and EPA ID Number of designated permitted facility?	✓			
e. The description of the waste(s) (DOT shipping name, DOT hazard class, DOT identification number)?	✓			
f. The total quantity of waste(s) and the type and number of containers loaded?	✓			
g. Required waste minimization certification?	✓			
h. Required signatures?	✓			
i. EPA hazardous waste numbers (3.1-7-11)?	✓			

	OK	DF	NI	NA
j Handling Codes (3.1-7-11)?	✓			
k. Additional waste numbers included in box J.	✓			
6) Has the generator submitted copies of hazardous waste manifests to the Department within five (5) working days after shipping hazardous waste? (This requirement applies to both Indiana's and other states hazardous waste manifests). 329 IAC 3.1-7-6	✓			
7) Reportable exceptions: 40 CFR 262.42 (HWIMS 180)				
a. For manifests examined (except for shipments within the last 35 days), enter the number of manifests for which the generator has NOT received a signed copy from the designated facility within 35 days of the date of shipment.	0			
b. For manifests indicated in question (7a), enter the number for which the generator has submitted exception reports (40 CFR 262.42) to the Commissioner.	0			

Q. EPA IDENTIFICATION NUMBERS (HWIMS 090)	OK	DF	NI	NA
1) Has the generator received an EPA identification number prior to treating, storing, disposing of, transporting, or offering for transportation, hazardous waste? 40 CFR 262.12(a)	✓			
2) Has the generator offered his hazardous waste to transporters or to TSD facilities that have received an EPA identification number? 40 CFR 262.12(c)	✓			
R. INTERNATIONAL SHIPMENTS (HWIMS 190)				
1) Has the installation imported or exported hazardous waste? 40 CFR 262.50 (If answered Yes, complete the following as applicable.)				✓
a. Exporting hazardous waste; has a generator:				
i. Notified the administrator and OSHWM/IDEM in writing?				✓

	OK	DF	NI	NA
ii. Obtained the signature of the foreign consignee confirming delivery of the waste(s) in the foreign country?				✓
iii. Met the Manifest requirements?				✓
b. Importing hazardous waste; has the generator met the manifest requirements?				✓

S. LAND BAN NOTIFICATION REQUIREMENTS (HWIMS 700)	OK	DF	NI	NA
1) Does the generator provide a notification to the TSD facility with each shipment, even if waste meets treatment standards? 40 CFR 268.7	✓			
2) Does the notification include the following: (if possible, make copies of, or record information from notification(s) that do not contain the necessary information) 40 CFR 268.7	✓			
a. EPA hazardous waste number	✓			
b. Treatment standards (for wastes other than F001-F005 and F039, treatment standards may be referenced by including sub-category, treatability group, and CFR sections and paragraph where treatment standards appear)	✓			
c. Where treatment standards is specified technology, applicable five-letter treatment code?	✓			
d. Manifest number	✓			
e. If the waste meets treatment standards, or if alternate treatment standards for lab packs are specified, does it have proper certification statement?	✓			
f. Waste analysis data, if available.	✓			
3) Has the generator retained on-site a copy of all notices, certifications, waste analysis data, and other documentation produced pursuant to 268.7 for at least five (5) years? 268.7(a)(7)	✓			

T. RECORDKEEPING AND REPORTING

	OK	DF	NI	NA
1) Has the generator made a proper hazardous waste determination for all solid wastes generated at the facility, including correct LDR treatability group and treatment standard? 40 CFR 262.11 and 40 CFR 268.7(a) & 268.9 (HWIMS 100)	✓			

a. If DF, list below:

Assigned Classification	Correct Classification

b. Which of the following methods does the generator employ for waste determination?

i. Knowledge of waste.
ii. Analysis. Specify _____

2) Are all test results and analyses needed for hazardous waste determinations retained for at least three years? 40 CFR 262.40 (HWIMS 180)	✓			

3) Has the generator submitted biennial reports as required? 329 IAC 3.1-7-14) (HWIMS 180)	✓			

U. WASTE MINIMIZATION (HWIMS 100)

1) Does the generator have a written waste minimization plan?		✓ See Item #7		

a. If a written plan is not available, briefly describe the waste minimization program as presented by the company representative.

Under normal facility operation little hazardous waste is generated it goes into the blast furnace on-site this includes the steel containers.

	OK	DF	NI	N
2) Does the biennial report include the required waste minimization information? (40 CFR 265.7(h) and (J)/IC 13-7-27-7)				✓ See Item 1

3) Note any discrepancies between the written or oral plan, and observed on-site waste minimization activities. _____

_____

_____

_____

DRAW A SITE MAP; identify site of all hazardous waste activity, i.e. accumulation areas, storage areas, treatment areas, etc.

see following page

Remember to take photos and document as well as possible all violations!!!

5015S

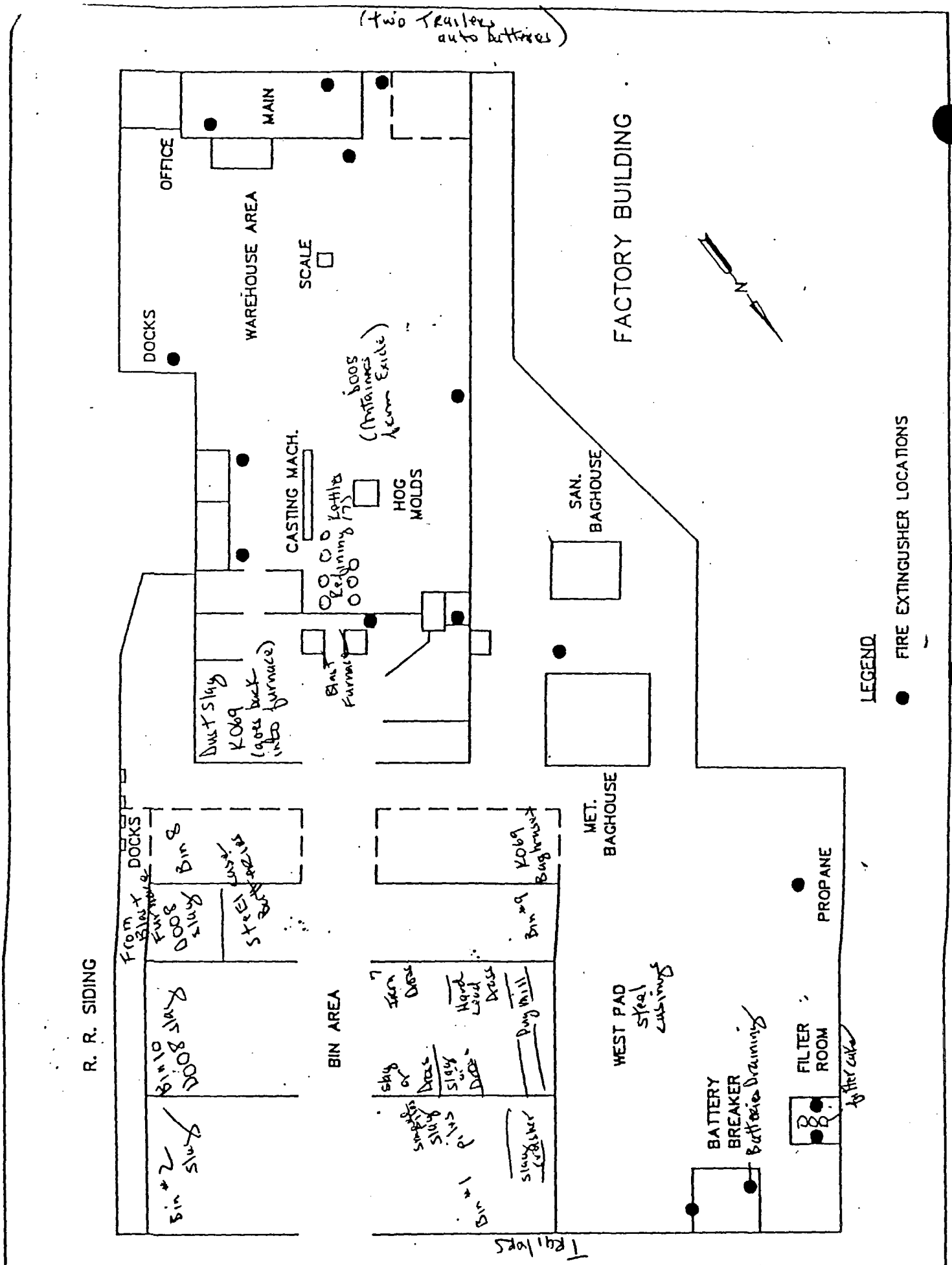

255-028

LAKE ENGINEERING, INCORPORATED 6000 LAKE FORREST DR. SUITE 360 ATLANTA, GEORGIA 30328	REFINED METALS CORPORATION BEECH GROVE, INDIANA	FIRE EXTINGUISHER LOCATIONS	FIGURE 7-1

5-028 1=1 6-9-89 M.A.R.

22

Container Management Appendix

(HWIMS 160 410)
40 CFR Part 265 as referenced by 262.34

Location/Description of Unit Casting

	OK	DF	NI	NA
A. GENERAL OPERATING REQUIREMENTS				
1) Are containers in good condition? (40 CFR 265.171)	✓			
2) Are containers compatible with waste in them? (40 CFR 265.172)	✓			
3) Are containers managed to prevent leaks? (40 CFR 265.173(b)	✓			
4) Are containers stored closed? (40 CFR 265.173(a))	✓	✓		
5) Are ignitable and reactive wastes stored at least 15 meters (50 feet) from the property line? (Indicate if waste is ignitable or reactive). (40 CFR 265.176)				✓
6) Are incompatable wastes stored in separate containers? (If not the provisions of 40 CFR 265.17(b) apply) (40 CFR 265.177(a))				✓
7) Are containers of incompatible waste separated or protected from each other by physical barriers or sufficient distance? (40 CFR 265.177(c))				✓
8) If required, are the following special requirements for ignitable, reactive, or incompatible wastes addressed? (40 CFR 265.17(a))				
a. Special handling?				✓
b. No Smoking signs?				✓
c. Separation and protection from ignition sources?				✓
9) Does the container storage area have adequate aisle space (40 CFR 265.35)	✓			
10) Are containers inspected weekly for leaks, deterioration, corrosion, or other factors? (40 CFR 265.174)	✓	✓		
B. PREPAREDNESS AND PREVENTION				
1) Security - Do security measures include: (HWIMS 300) (40 CFR 265.14) (TSD facilities only)				
a. 24- hour surveillance which continuously monitors and controls entry?				✓

	OK	NI	NA
b. Artificial or natural barrier around facility and controlled entry at all times?	✓		
c. Danger sign(s) at entrance?	✓		
2) Has the facility been maintained and operated to minimize the possibility of a fire, explosion, or release of hazardous waste or hazardous waste constituent? (40 CFR 265.31) (HWIMS 140/340, 810 spill)	✓		
3) If required, does the facility have the following equipment: (HWIMS 140/340)			
a. Internal communications or alarm systems? (40 CFR 265.32(a) & 40 CFR 265.34(a))	✓		
b. Telephone or 2-way radios at the scene of operations? (40 CFR 265.32(b) & 40 CFR 265.34(b)	✓		
c. Portable fire extinguishers, fire control, spill control equipment and decontamination equipment? (Please specify)	✓		
d. Water at adequate volume and pressure to supply water hoses, foam equipment, automatic spinklers or water spray equipment available? (Please specify) (40 CFR 265.32(d))	✓		
4) Whenever waste is being handled do all personnel have immediate access to an alarm or communication device (thru another employee if always available)? (40 CFR 265.34(a)) (HWIMS 140/340)	✓		

C. TESTING AND MAINTENANCE OF EMERGENCY EQUIPMENT (HWIMS 140/340)

1) a. Has the owner or operator established testing and maintenace procedures for emergency equipment? (40 CFR 265.33)	✓		
b. Is emergency equipment in operable condition? (40 CFR 265.33)	✓		
2) Does the owner or operator maintain adequate aisle space for the movement of personnel, fire protection equipment, spill control equipment, and decontamination equipment? (This applies to access for this equipment to reach hazardous waste management areas) (40 CFR 265.35)	✓		

GENERATOR ACCUMULATION APPENDIX
(HWIMS 120)

Location/Description of Unit Casting

	OK	DF	NI	NA
A. GENERAL OPERATING REQUIREMENTS				
1) If waste is being shipped off-site is it properly packaged, labeled and marked per DOT regulations? 40 CFR 262.30-262.32			✓	
2) Is the container clearly marked with the start of accumulation date? 40 CFR 262.34		✓ See Item #8		
3) Has the generator accumulated hazardous waste on-site for 90 days or less? 40 CFR 262.34	✓			
4) Do wastes remain in accumulation tanks for more than 90 days? 40 CFR 262.34				✓
5) Is each container and tank labeled or marked clearly with the words "Hazardous Waste"? 40 CFR 262.34		✓ See Item #9		
B. SATELLITE ACCUMULATION (HWIMS 120) Mobile Equipment Area				
1) Are containers marked with the words "Hazardous Waste" or with other words identifying the contents? 40 CFR 262.34	✓			
2) Are containers in good condition, compatible with the wastes in them and stored closed? 40 CFR 262.34	✓			

WASTE PILE APPENDIX
40 CFR 265, Subpart L
329 IAC 3.1-10-1 (HWIMS 440)

Location/Description of Unit Material Storage Building - Bins

A. GENERAL OPERATING REQUIREMENTS	OK	DF	NI	NA
1) Is wind dispersal of hazardous waste managed? 40 CFR 265.251	✓			
2) Is the pile protected from precipitation and run-on by some means (such as being under roof)? 40 CFR 265.253(b) (IF NOT then go to number 4)	✓			
3) Are liquids or wastes containing liquids placed in the pile? 40 CFR 265.253(b)	✓			
4) Does the facility maintain a proper run-on control system? 40 CFR 265.253(a)2 inside building				✓
5) Does the facility maintain a proper run-off system? 40 CFR 265.253(a)3				✓
6) Are run-off and run-on collection and holding facilities managed or emptied expeditiously after storms? 40 CFR 265.253(a)4 any run-off/run-on is collected by sump system & treated in on-site WWTP	✓			
7) If required, are reactive or flammable wastes handled properly? Is 265.17(b) complied with? 40 CFR 265.256 & 257				✓
8) Has the owner or operator complied with the requirement for liners and leachate collection systems in accordance with 40 CFR 264.251 with respect to waste received beginning May 8, 1985? 40 CFR 265.254 inside building	✓			

Please describe the location of the pile including data pertinent to regulatory status (ie. inside, outside)

Inside Material Storage Area in Bins

Please describe run-on and run-off control activities.

Run-off and run-on is collected by a sump system and treated in a on-site WWTP

B. PREPAREDNESS AND PREVENTION

1) Security - Do security measures include: (HWIMS 300)
40 CFR 265.14

	OK	DF	NI	NA
a. 24-hour surveillance which continuously monitors and controls entry?				✓
OR				
b. Artificial or natural barrier around the facility and controlled entry, at all times?	✓			
c. Danger sign(s) at entrance?	✓			

2) Has the facility been maintained and operated to minimize the possibility of a fire, explosion, or release of hazardous waste or hazardous waste constituent? (HWIMS 340, 810 spill)
40 CFR 265.31 — ✓

3) If required, does the facility have the following equipment: (HWIMS 340)

a. Internal communications or alarm systems? 40 CFR 265.32(a)	✓			
b. Telephone or 2-way radios at the scene of operations? 40 CFR 265.32(b)	✓			
c. Portable fire extinguishers, fire control, spill control equipment and decontamination equipment? (Please specify) 40 CFR 265.32(c)	✓			
d. Water at adequate volume and pressure to supply water hoses, foam equipment, automatic spinklers or water spray equipment available? (Please specify) 40 CFR 265.32(d)	✓			

	OK	DF	NI	NA
4) Whenever waste is being handled do all personnel have immediate access to an alarm or communication device (thru another employee if always available)? 40 CFR 265.34(a) (HWIMS 340)	/			

C. TESTING AND MAINTENANCE OF EMERGENCY EQUIPMENT

1) Has the owner or operator established testing and maintenace procedures for emergency equipment? 40 CFR 265.33 (HWIMS 340)	/			
2) Is emergency equipment maintained in operable condition? 40 CFR 265.33 (HWIMS 340)	/			
3) Does the owner or operator maintain adequate aisle space for the movement of personnel, fire protection equipment, spill control equipment, and decontamination equipment? (This applies to access for this equipment to reach hazardous waste management areas.) 40 CFR 265.35 (HWIMS 340)	/			

5022S

SURFACE IMPOUNDMENT APPENDIX

40 CFR 265, Subpart K
329 IAC 3.1-10-1

(HWIMS 430)

Location/Description of Unit East of the facility
(See Comments Page 32)

	OK	DF	NI	NA
A. GENERAL OPERATING REQUIREMENTS				
1) Do surface impoundments have at least 60 cm (2 feet) of freeboard? 40 CFR 265.222	✓			
2) Do earthen dikes have protective covers? 40 CFR 265.223	✓			
3) Are reactive & ignitable wastes rendered non-reactive or non-ignitable before storage in a surface impoundment? (If waste is rendered non-reactive or non-ignitable, see treatment requirements.) 40 CFR 265.229				✓
4) Are incompatible wastes stored in different impoundments? (If not, the provisions of 40 CFR 265.17(b) apply.) 40 CFR 265.230				✓
5) If required, are the following special requirements for ignitable, reactive, or incompatible wastes addressed? 40 CFR 265.17				
a. Special handling?				✓
b. No Smoking signs?				✓
c. Separation and protection from ignition sources?				✓
6) Has the owner or operator installed two or more liners and leachate collection system in accordance with 40 CFR 264.221(c) with respect to waste received beginning May 8, 1985? 40 CFR 265.221(a) In September 1989 the concrete lined impoundment was lined with a polyethylene liner.			✓	
B. PREPAREDNESS AND PREVENTION				
1) Security - Do security measures include: (HWIMS 300) 40 CFR 265.14				
a. 24-hour surveillance which continuously monitors and controls entry? OR				✓

	OK	DF	NI	NA
b. Artificial a natural barrier around the facility and controlled entry at all times?	✓			
c. Danger sign(s) at the entrance?	✓			
2) Has the facility been maintained (HWIMS 340, 810 spill) and operated to minimize the possibility of a fire, explosion, or release of hazardous waste or hazardous waste constituent? 40 CFR 265.31	✓			
3) If required, does the facility have the following equipment: (HWIMS 340)				
a. Internal communications or alarm systems? 40 CFR 265.32(a)	✓			
b. Telephone or 2-way radios at the scene of operations? 40 CFR 265.32(b)	✓			
c. Portable fire extinguishers, fire control, spill control equipment and decontamination equipment? (Please specify) 40 CFR 265.32(c)	✓			
d. Water at adequate volume and pressure to supply water hoses, foam equipment, automatic spinklers or water spray equipment available? 40 CFR 265.32(d)	✓			
4) Whenever waste is being handled do all personnel have immediate access to an alarm or communication device (thru another employee if always available)? 40 CFR 265.34(a) (HWIMS 340)	✓			

C. TESTING AND MAINTENANCE OF EMERGENCY EQUIPMENT

1) Has the owner or operator established testing and maintenance procedures for emergency equipment? 40 CFR 265.33 (HWIMS 340)	✓			
2) Is emergency equipment maintained in operable condition? 40 CFR 265.33 (HWIMS 340)	✓			

	OK	NO	NI	NA
3) Does the owner or operator maintain adequate aisle space for the movement of personnel, fire protection equipment, spill control equipment, and decontamination equipment? (This applies to access for this equipment to reach hazardous waste management areas) 40 CFR 265.35 (HWIMS 340)	✓			

The on-site surface impoundment is used to collect facility run-off & run-on with possible K069 + D008 contaminate prior to treatment in this WWT

D. LAND BAN REQUIREMENTS (HWIMS 700)

	OK	NO	NI	NA
1) Is treatment other than evaporation or dilution occurring in the surface impoundment? 40 CFR 268.3(a) and 268.4(b)		✓		
2) Has the facility submitted to the Agency a waste analysis plan and certification of compliance with minimum technology requirements and groundwater monitoring requirements? 40 CFR 268.4(a)(4)		✓		
3) If the minimum technology requirements have not been met, has a waiver been granted for that unit? 40 CFR 268.4(a)(3)(ii)		✓		
4) Are representative samples of sludge and supernatant from the surface impoundment tested separately, acceptably, and in accordance with the sampling frequency and analyses specified in the waste analysis plan? (Attach test results.) 40 CFR 268.4(a)(2)(i)		✓		
5) Does the operating record adequately document the results of waste analyses performed in accordance with 40 CFR 268.4? 40 CFR 264.73(b)(3) and 265.73(b)(3)				✓
6) Do the treatment residues (sludges or liquids) exceed applicable treatment standards/prohibition levels?				
a. Sludge			✓	
b. Supernatant			✓	
7) If sludge residues exceed treatment standards/ prohibition levels, are they removed on an annual basis? 40 CFR 268.4(a)(2)(ii)		✓		
Are residues subsequently managed in another surface impoundment? 40 CFR 268.4(a)(2)(iii)		✓		

8) If supernatant is determined to exceed treatment standards, is annual throughput greater than impoundment volume? 40 CFR 268.4(a)(2)(ii) ___ ___ / ___

Surface Impoundment violations are being addressed by a Civil action taken by EPA against the facility on November 12, 1990. This action involves both RCRA and Clean Air Act violations. Civil action No. IP 90-2077C.

5037S

Attachment A

REFINED METALS BEECH GROVE

INVENTORY MARCH 27, 1993

AUTO BATTERIES

~~7707~~ x 37.5 = ~~289,103~~

8958 x 37.5 lbs = 335,925

STEEL CASE

536,000 x .60 = 321,600 lb

Pb value

Total battery count - Trailers + Cracker

REFINED METALS BEECH GROVE
INVENTORY - MARCH 27, 1993

		pounds
INDUSTRIAL PLATES AND CELLS		
BIN 8 - 25 x 18 x 6 = 2700 x 83 =		224,100
WRECKER - 14 x 10 x 6 = 840 x 83 =		69,720

		293,820
DROSS		
SOFTENING BIN 11 - 15 x 6 x 5 x 194		87,300
TIN BIN 7 - 10 x 10 x 4 x 194 =		77,600
DRY BIN 3 - 20 x 6 x 10 x 194 =		232,800
TIN DRUMS - 76 DRUMS x 1670 =		126,920

		524,620
d back - into furnace K069	DUST SLAG	
	30 x 10 x 5 x 161 =	241,500
	FLUE DUST	
	22 x 60 x 6 = 7920 x 62 =	491,040
D008 -	ESTIMATED BLAST SLAG	761 TON
	FACTORY SCRAP	
	132 DRUMS x 875 lbs =	115,500
	wt/drm	

unfinished
not filled all
(pigs outside)

REFINED METALS BEECH GROVE
FURNACE METAL INVENTORY

LOT#	COUNT	WEIGHT	SB	SN	AS	CU
111	2800 pigs	168,000#	4.32%	.85%	.04%	.05%
222	1960	116,200#	4.60%	.58%	.12%	.048%
2% SN	840	49,800#	6.60%	2.00%	.04%	.008%
444	2800	165,600#	3.92%	.86%	.05%	.011%

3-27-93

DATE	ALLOY	PIGS	LOT	ROW	3-27	Product
3/22	1112	910	910	15	58,036	
11/25	44H	49	856	E/W	94,492	
1/19	1030	2240	887	W/W	141,290	
7/27	A75	1050	732	11	66,492	
1/26	4B11	2555	896	3	160,408	
2/2	4B11	2905	901	6	177,790	
					338,198	
2/4	9B41	1505	904	W/W	90,900	
1/29	11C3	315	900	4	19,772	
10/26	6U3	630	817	5	40,374	
11/19	6U3	2625	836	12	168,684	
					209,058	
11/23	CaX	1750	852	10	110,066	
2/4	3% B	1050	903	W/W	66,332	
1/22	3½% P	490	891	5	30,768	
[redacted]						
				TOTAL WEIGHT	1,225,404	

PREINSPECTION FILES AUDIT
CHECKLIST

DATE: 3/23/93

BY: L Halloran

COMPANY: Refined Metals Corp

LOCATION: 3700 South Arlington Avenue

I.D.#: IND/000/718/130

Type of inspection: (G)--T---(TSD)--Closure---Complaint---Other (please specify)

A. GENERAL

		YES	NO	NA
1.	FEDERAL NOTIFICATION ON FILE?	✓		
2.	FEDERAL PART A ON FILE?	✓		
3.	CLOSURE PLAN REVIEWED?		✓	
4.	CONTINGENCY PLAN REVIEWED?		✓	
5.	BIENNIAL REPORT REVIEWED?	✓		
*6.	PART B PERMIT REVIEWED?		✓	

*(Note any Special Permit Conditions)
Comments:

B. NOTIFICATION DATA (Notify type, waste codes listed, etc.)

8/80 K069 (6)

[redacted] DISPOSAL INFORMATION

[redacted] Land Disposal Facility

[redacted] Adams Center Landfill

REFINED METALS BEECH GROVE
KETTLE INVENTORY

KETTLE 1	5,000
KETTLE 2	93,000
KETTLE 3	5,000
KETTLE 4	5,000
KETTLE 5	14,000
KETTLE 6	171,000
KETTLE 7	5,000

TOTAL	293,000

lbs Pb in Kettles being processed

D. LIST POSSIBLE WASTE STREAMS NOT LISTED ON BIENNIAL REPORT

None

E. LIST WASTE MANAGEMENT PRACTICES WHICH MAY REQUIRE A PERMIT

F. FEDERAL PART A (Handling Codes), OR PART B PERMIT

	Code	Amount	Unit of Measure
1.	S03	400 yd³	
2.			
3.			
4.			
5.			

Are there any discrepancies regarding multiple Part A submittals?

G. CLOSURE/POST-CLOSURE

1. Are there any closed units? If yes, describe.

H. COMPLIANCE HISTORY

List past two inspections and enforcement actions (CO, NOV, VL, WL)

Date of Inspection	Action Type	Date of Action
6/25/92	None issued	Added to previous violations
3/28/91	" "	Sent to EPA

I. LIST UNRESOLVED ENFORCEMENT ACTIONS/VIOLATIONS

Continuous unresolved enforcement actions since 1987 inspection referral

J. BRIEFLY SUMMARIZE PREVIOUS VIOLATIONS. NOTE IF THEY ARE REPEATS.

See Civil action FP902077C, Cause No 91-S-J-496

K. LIST ANY ITEMS UNDER COMPLIANCE SCHEDULES WHICH ARE NOT YET COMPLETED OR NEED FIELD VERIFIED, INCLUDING WASTE MINIMIZATION REQUIREMENTS IN ENFORCEMENT ORDER AND SETTLEMENT AGREEMENTS.

L. COMMENTS

2455v

Revised 8/19/92

Description of Violations
Refined Metals Corporation
IND 000 718 130
Inspection of March 23, 1992

1. Page 7
Page 8

40 CFR 265.13

Facility does not have a detailed waste analysis plan on site.

2. Page 10

40 CFR 265.16(d)2

Facility personnel training record does not include job descriptions related to hazardous waste job activities.

A job description for John Saucerman, Safety & Health Coordinator, was not available during the inspection. A job description for John Saucerman was submitted to this office on April 5, 1993. This violation has been corrected.

3. Page 12

40 CFR 265.52(d)

The contingency plan did not identify the correct emergency coordinator.

The current emergency coordinator is Mike Meloy. The facility submitted a correct list of emergency coordinators to this office on April 5, 1993. This violation is now in compliance.

4. Page 14

40 CFR 265.73(b)(1)

The facility operating record did not include the method(s) and date(s) of each waste's treatment, storage, or disposal as required in 40 CFR Appendix I.

This pertains to the thirty-seven (37) fifty-five (55) gallon drums of D008 waste located in the Casting area.

5. Page 14

40 CFR 265.73(b)(2)

The facility operating record did not include the location and quantity of each hazardous waste within the facility.

This pertains to the above mentioned drums in Item 4 manifested to Refined Metals Corporation from Exide.

6. Page 16 <u>329 IAC 3.1-7-4</u>

The generator had not used the Indiana Hazardous Waste Manifest for hazardous waste shipments to Refined Metals Corporation in Memphis, Tennessee.

The facility has been transporting their hazardous waste without a manifest to their other plant located in Memphis, Tennessee during the facility's shut down.

7. Page 19
Page 20 <u>40 CFR 265.75(h) and (j)</u>

The 1991 Biennial Report did not include the required waste minimization information.

8. Page 25 <u>40 CFR 262.34</u>

The start of accumulation period was not clearly marked on each container of hazardous waste.

This pertains to eighteen fifty-five gallon drums of lead contaminated waste (D008) located in the casting area.

9. Page 25 <u>40 CFR 262.34</u>

Hazardous waste containers were not properly marked with the words "Hazardous Waste".

There were eighteen fifty-five gallon drums of lead contaminated waste (D008) located in the casting area not identified.

APPENDIX C

HEALTH AND SAFETY PLAN

REFINED METALS CORPORATION SITE

Prepared For:

REFINED METALS CORPORATION
Beech Grove, Indiana

Prepared By:

ADVANCED GEOSERVICES CORP.
Chadds Ford, Pennsylvania

March 3, 1999
98-478-02

F:\OFICEAGC\PROJECTS\FILES\98-478\Reports99\H&SPlanCov.wpd

TABLE OF CONTENTS

PAGE NO.

1.0 Introduction 1-1

1.1 Applicability 1-2
1.2 Key Regulations 1-2
1.3 Site Location 1-3
1.4 Site History 1-3

2.0 Summary of Potential Closure Field Activities 2-1

3.0 Project Personnel Responsibilities 3-1

4.0 Site Characterization 4-1

4.1 Site Access 4-1
4.2 Site Control 4-2

5.0 Personnel Training 5-1

6.0 Medical Monitoring 6-1

7.0 Hazard Evaluation 7-1

8.0 Site Monitoring 8-1

9.0 Action Levels 9-1

10.0 Anticipated Personal Protective Equipment Requirements for Closure Activities 10-1

11.0 Decontamination 11-1

12.0 Emergency Response 12-1

12.1 Notification of Site Emergencies 12-1
12.2 Responsibilities 12-1
12.3 Accidents and Injuries 12-2
12.4 Communications 12-2
12.5 Site to Hospital Directions 12-2

TABLE OF CONTENTS
(Continued)

PAGE NO.

13.0 Incident Reporting Procedure 13-1

14.0 Special Precautions and Procedures 14-1

14.1 Heavy Machinery/Equipment 14-1
14.2 Construction Material and Site Refuse 14-1
14.3 Heat Stress/Cold Exposure 14-2
14.4 Additional Safety Practices 14-2

LIST OF TABLES

TABLE

7-1 Potential Contaminants of Concern
7-2 Health and Safety Hazards
9-1 Action Levels
12-1 Emergency Telephone Numbers

LIST OF FIGURES

FIGURE

1-1 Site Location Map
12-1 Route Map to St. Francis Hospital

LIST OF APPENDICES

APPENDIX

A Forms
B Personnel Training
C Medical Monitoring
D Personnel Protective Equipment
E Decontamination
F Temperature Extreme Guidelines

1.0 INTRODUCTION

This Health and Safety Plan (HSP) has been developed to reflect current health and safety procedures with regard to performing Closure Facility Investigation (Closure) field activities at the Refined Metals Corporation (Site) located in Beech Grove, Marion County, Indiana. The closure field activities at the Site will be conducted in accordance with the Closure Work Plan, developed by Advanced GeoServices Corp. (AGC). Presented herein are the minimum required health and safety procedures for Advanced GeoServices Corp., contractors, and subcontractors participating in the closure field activities.

The procedures set forth in this HSP are designed to reduce the risk of exposure to chemical substances that may be present in the soil, water, and air and other hazards associated with closure field activities. The procedures set forth herein are developed in accordance with the provisions of 29 CFR 1910.120 (Hazardous Waste Operations and Emergency Response). The recommended health and safety guidelines set forth within this document may be modified as further information is made available through sample analysis and on-site characterization.

Site specific information is presented in Sections 1 through 14 of this HSP, with general health and safety information located in Appendix A through F of this document.

1.1 APPLICABILITY

The provisions of the HSP are mandatory for all on-site AGC employees, contractors, and subcontractors engaged in closure field operations who may be exposed or have the potential to be exposed to hazardous substances at the referenced site.

This HSP provides the minimum requirements for contractors and subcontractors health and safety protection for field activities in support of the designated proposed field activities. Contractors and/or subcontractors may choose to use this HSP as a guide in developing their own plan (which shall be reviewed and approved by AGC), or may choose to adopt and comply in full with this HSP when performing the designated field activities at the Site. If the contractor and/or subcontractor adopts this HSP, all personnel assigned to site field activities for the project must read and sign the Plan Acceptance Form and complete a Health and Safety Compliance Certification Form (Appendix A) before commencing site activities. In either case, contractors and/or subcontractors will hold AGC harmless from, and indemnify it against, all liability in the case of any injury. AGC reserves the right to review and revise the HSP at any time. At a minimum, all provisions of this HSP will be followed.

Inadequate health and safety precautions on the part of the contractor and/or subcontractor, or the belief that the contractor's and/or subcontractor's personnel are or may be exposed to an immediate health hazard, can cause AGC to suspend the site work and ask the contractor and/or subcontractor to evacuate the hazard area.

1.2 KEY REGULATIONS

Key regulations that are or may be applicable to the proposed field activities are listed below. Field activities and operations associated with this project (if applicable) will be conducted in accordance with these regulations.

Government Regulations	Subject
29 CFR 1904	Recording and Reporting Occupational Injuries and Illness
29 CFR 1910.120	Hazardous Waste Site Operations
29 CFR 1910.20	Record Keeping/Recording
29 CFR 1910.1000	OSHA Permissible Exposure Limits
29 CFR 1926	Construction Activities
29 CFR 1910.134	Respirator Protection

1.3 SITE LOCATION

The Refined Metals Corporation Site encompasses approximately 24 acres and is located in central Indiana, Marion County. The Site is located at 3700 Arlington Avenue, Beech Grove, Indiana, and is bordered by industrial and commercial facilities, and also vacant lots.

1.4 SITE HISTORY

Refined Metals Corporation was engaged in recycling lead batteries and other lead wastes. There are currently no manufacturing operations at the facility. The plant was constructed in 1968 as a secondary lead smelter. In 1984, a battery breaker operation was installed. From April 14, 1995, through December 31, 1995, operations were reduced to enriching and casting lead ingots from off-specification lead products. Since 1996, no production has taken place and the facility has been inactive.

The facility was constructed to recycle lead batteries and other lead wastes. Auto batteries constituted 90 percent of the materials recycled, and the remainder was waste material from battery manufacturers and other lead scrap. During operation, the batteries were temporarily stored in trailers or on pallets in a paved storage yard. The batteries were then fed into the battery crusher,

where the tops of the batteries were sawed off and the sulfuric acid was drained into a stainless steel tank that drained to the wastewater treatment system. The battery casings and their contents were tumbled and crushed. Lead plates and other lead parts were separated and transported to the materials storage building to be later fed into the furnace. The battery casings were shredded and separated into plastic and rubber in a flotation tank. The plastic was blown into a trailer for sale to be sold to an offsite recycler. Rubber was stored and then fed into the blast furnace.

Before 1984, materials were stored on-site with minimal spill or runoff control. Storm water runoff from the storage piles and work areas flowed to the storage pond and evaporated; some runoff flowed off site to the north drainage ditch. The pond appears to have been included on the Part A permit after 1991. Once the battery crusher was installed in 1984, a batch neutralization system was installed to treat wastewater from the battery crushing and flotation systems containing sulfuric acid. The wastewater was neutralized before discharging to Beech Grove Municipal Sanitary Sewer system. Since 1988, all stormwater was contained and routed to the wastewater treatment system. The facility system included:

1. Collection of site runoff water in three 10,000-gallon stainless steel tanks set into concrete sumps with one-foot thick walls and bottoms. PVC pipes conveyed the water from the pump stations to the sumps. The tanks were cleaned annually and inspected for flaws.

2. Collection of sulfuric acid and flotation water in a 6,000-gallon stainless steel-lined sump in the battery breaker building.

3. Storage in two fiberglass tanks.

4. Neutralization with magnesium hydroxide and sodium hydroxide.

5. Chelation and coagulation of the solid particles with polymers into a settleable floc using polymers.

6. Separation of the water from the floc in a slant-plate clarifier.

7. Concentration of the solids in a filter press.

Reportedly, underground storage tanks (USTs) were never used at the Site. Three above ground storage tanks (ASTs) - two 10,000-gallon (ASTs) and one 20,000-gallon AST - were used to store diesel fuel for company trucks. The tanks were reportedly cleaned out in 1985 and subsequently taken out of service. The three tanks are enclosed by a spill containment wall which was reportedly constructed before 1980. A 500-gallon AST and a 750-gallon AST are used for diesel fuel and gasoline, respectively, to fuel on-site vehicles. The 750-gallon gasoline tank is enclosed within a spill containment wall and pad. Propane, which is used to power forklifts, is stored in a 2,000-gallon tank.

A leak in a valve of one of the out-of-service diesel tanks occurred around 1983, resulting in a spill outside of the containment wall. A portion of the spill flowed along the drainage ditch located north of the refining area. The contaminated soil was excavated and the tanks were emptied. Although documentation of the spill is not available, the soil cleanup was reportedly conducted under state supervision.

2.0 SUMMARY OF POTENTIAL CLOSURE FIELD ACTIVITIES

	TASK	DESCRIPTION
A.	Soil Sampling	Collect soil samples.
B.	Sediment Sampling	Collect sediment samples from stormwater impoundment and former drainage channels.
C.	Groundwater Sampling	Collect groundwater samples.
D.	Site Survey	Survey wells for horizontal and vertical control.
E.	Site Walk	Tour site.

Refer to the Closure Work Plan for a detailed description of the scope of work for the closure field activities.

3.0 PROJECT PERSONNEL RESPONSIBILITIES

The following responsibilities and authorities have been or will be assigned to designated personnel for closure field activities.

AGC Project Manager

Mr. Paul G. Stratman, P.E. will be the AGC Project Manager for the project. The AGC Project Manager will serve in a supervisory capacity over all activities and personnel involved in conducting field activities in support of the Closure Work Plan during this project.

AGC CLOSURE Task Manager

The Closure Task Manager will serve in a supervisory capacity over the activities conducted during the field activities at the RMC. The AGC Closure Task Manager will be responsible for assuring that the HSP is adhered to and that procedures outlined in the plan will be carried out during the field activities. Mr. Stephen Kirschner, P.E. will serve as the AGC Closure Task Manager for this project.

AGC Site Health and Safety Officer

A Site Health and Safety Officer will be designated by the AGC Project Manager for specific site activities to ensure that required monitoring will be conducted during the investigation, and to ensure that the HSP is properly implemented. The Site Health and Safety Officer will be responsible for:

- the field implementation, evaluation, and any necessary field modification of this HSP;
- notification of off-site emergency response personnel and other potentially affected parties, as necessary;
- notification of the EPA Project Coordinator, Section Chief, or Eastern Response Section Hotline;
- notification of IDEM office;

- maintaining adequate supplies of all personal protective equipment as well as calibration and maintenance of selected monitoring instruments; and
- suspending activities at the site which are not in conformance to the HSP.

The Site Health and Safety Officer will be designated by the AGC Project Manager for those activities involving AGC personnel. The Site Health and Safety Officer will be a qualified employee of AGC or their designee. The designation of the Site Health and Safety Officer may be changed by the AGC Project Manager, depending on site activities or conditions, as appropriate.

4.0 SITE CHARACTERIZATION

4.1 SITE ACCESS

The RMC site is defined in the Consent Decree (3700 Arlington Rd., Beech Grove, Indiana, 46107) as where contamination related to the Site is detected, or where activities are required for the Closure. Access to specific task work at the Site will be through access areas specified by AGC personnel. As such, site access will be controlled at the specific task work locations where Closure activities are planned.

The specific task work areas will be divided into temporary work zones as a means to control task area access and decontamination efforts, where necessary. The work areas may include the following zones (while site work is occurring) to control access:

- Support Zone - Clean area, storage for excess non-contaminated equipment;
- Contaminant Reduction Zone (CRZ) - where decontamination processes will take place. Location of the decontamination pad and containers of contaminated personal protective equipment (PPE);
- Exclusion Zone - Potentially contaminated area.

Access to the task work areas during the Closure field activities will be limited to authorized personnel. The exclusion zone will be cordoned off, if deemed necessary by the Health and Safety Officer, by barricade tape or some other equipment method which will designate the exclusion zone boundary. The zones will also be monitored by the Site Safety Officer or his designee to insure personnel do not enter without proper training and protection.

In the event of an emergency or release, site egress away from a work area will be by the nearest route in the upwind and upslope directions, as appropriate.

4.2 SITE CONTROL

Certain procedures will be followed to insure suitable task work area control and limit access so that those persons who may be unaware of the work area condition are not exposed to inherent hazards. Potentially contaminated media, such as purged groundwater, will be placed in approved containers and secured in an area on the RMC property to prevent unauthorized tampering. A log of AGC, RMC, EPA, IDEM and other personnel related to the Closure investigation activities will be maintained in the bound field logbook by AGC site personnel.

5.0 PERSONNEL TRAINING

General site workers (such as equipment operators, general laborers, and supervisory personnel) engaged in hazardous substance activities which expose or potentially expose workers to hazardous substances and health hazards shall receive a minimum of 40 hours of class room instruction, and a minimum of three days actual field experience under the direct supervision of a trained, experienced supervisor. Exemptions to these requirements, e.g., decreasing the number of training hours to 24, are found in Appendix B of this HSP. Health and safety training programs shall comply with the criteria set forth by Occupational Safety and Health Administration (OSHA) as per final Regulation 29 CFR 1910.120. Exceptions from training are subject to review by the Site Health and Safety Officer and/or the Closure Task Manager. Documentation of personnel meeting the required training will be maintained at AGC's office.

This HSP will be distributed to all project personnel for review prior to the start of field activities. A pre-operation meeting for each task will be held by the Health and Safety Officer to discuss the contents of the HSP. Specialty training will be provided as determined based on task and responsibility.

A more detailed discussion of training requirements is included in Appendix B.

6.0 MEDICAL MONITORING

Personnel involved in field activities associated with this project will be active participants in a medical monitoring program. AGC has implemented a medical monitoring program that complies with the requirements of 29 CFR 1910.120. Documentation of the medical monitoring program for each individual is maintained at AGC's office.

Contractors and subcontractors will be required to adhere to the medical monitoring requirements of CFR 1910.120 and provide documentation of compliance through the use of the Health and Safety Compliance Certification Form (Appendix A-2 of this HSP) or through other appropriate means, or demonstrate exemptions from these requirements based on scheduled activities and work area characterization. An example of such an exemption would be a delivery driver who makes a delivery to the site in an area which has been characterized as having no contamination or no significant potential for exposure to constituents. Appendix C provides general information on medical monitoring.

7.0 HAZARD EVALUATION

The following tables have been prepared that list the potential constituents, constituent properties, and potential health and safety hazards associated with the RMC Site.

Table 7-1 Lists the potential chemical compounds which may be associated with the Site. This table provides a summary of toxicological data for the compounds listed. The most significant compounds listed in Table 7-1 that may be associated with Site according to the Consent Decree and based on toxicity, reported results and likelihood of exposure due to scheduled field tasks are presented in the following section. These compounds have been used as the framework for the action levels discussed in Section 9.0 of this HSP.

Table 7-2 Lists potential health and safety hazards associated with the Site.

Table 7-1

Potential Contaminants of Concern

Contaminant	PEL	STEL	Characteristics	Route of Exposure	Symptoms of Acute Exposure	Target Organs
Cadmium	0.005 mg/m^3	None	Silver-White, blue tinged, lustrous, odorless solid	Inhalation Ingestion	headache, nausea, chills, vomiting, diarrhea	Respiratory system, kidneys, prostate, blood
Lead	0.05 mg/m^3	0.100 mg/m^3	dense, ductile, soft, gray solid	Inhalation Ingestion Contact	Weakness, facial pallor, abdominal pain	Eyes, GI tract, kidneys, blood, gingival tissue

Notes:
PEL-Permissible Exposure Limit
STEL-Short Term Exposure Limit
GI-Gastrointestinal

Table 7-2

Health and Safety Hazards

HAZARD	DESCRIPTION	LOCATION	PROCEDURE USED TO MONITOR/REDUCE HAZARD
Heavy Equipment	Drill rigs, backhoes	Throughout the Site.	Personnel maintain eye contact with operators; hard hats, safety shoes, and eye & ear protection worn (as appropriate) during equipment operation.
Refuse and Material	Construction Material	Throughout the Site.	Maintain clean work areas, dispose of refuse immediately, do not block access routes with materials or debris.
Heat Producing/ Electrical Equipment	Generators, Vehicles, Steam Cleaners, Power Tools	Throughout the Site.	Operate equipment away from vegetation and materials that may ignite. Maintain firefighting equipment in the vicinity of operating equipment.
Heat Stress/Cold Exposure	Personnel working under temperature extremes are subject to adverse effects.	Throughout the Site.	Employ the buddy system. Each worker is responsible for visually monitoring his/her partner for signs of heat stress or cold exposure. Site safety personnel will also monitor site conditions and establish work/rest regimes in accordance with Appendix F.
Chemical Exposure	Personnel can be exposed to various compounds associated with the Site.	Soils and Groundwater	Follow guidelines in the Health and Safety Plan. Be familiar with the signs and symptoms of exposure and first aid procedures. Report suspected over-exposure to the supervisor immediately.

8.0 SITE MONITORING

Field activities associated with the Site may create conditions that cause contaminants to be released into the breathing zone or to come into contact with the skin of field personnel. However, the hazard associated with these conditions is suspected to be low. The most significant compounds and elements found in Table 7-1 that may be associated with site activities according to the Consent Decree and based on toxicity, reported results, and likelihood of exposure due to scheduled Closure field activities are as follows:

- Lead
- Cadmium

Monitoring of airborne dust concentrations with an MIE PDM-3® or equivalent instrument, will be performed during intrusive operations that have the potential to make airborne surface and subsurface soils. The intrusive operations include collecting soil samples with a geoprobe and soil sampling. Air monitoring within the breathing zone will be conducted at the initiation of each intrusive operation, then on an as-needed basis for each intrusive site activity, as determined by the Site Health and Safety Officer.

9.0 ACTION LEVELS

Action levels have been established for Personal Protective Equipment (PPE) use and implementation of additional safety precautions, as necessary. Level D-modified PPE, as described in Appendix D of this plan, has been established as a minimum requirement during all Closure field activities. Also, Level D-modified PPE will be required for those site operations and areas that do not pose a potential threat of exposure to hazardous substances (e.g., site walk through or surveying). Level C-modified PPE as described in Appendix D of this plan will be required as indicated by the site health and safety monitoring. Detailed PPE descriptions are presented in Appendix D.

Table 9-1 lists the action levels for the airborne concentrations of the potential site compounds, lead and cadmium, and the respective personal protection. If airborne dust levels reach or exceed the action levels described in this Plan for sampling activities inside the buildings, an upgrade of PPE (Level C-modified, Level C or B) will be required. The action level value of 5 mg/m^3 for the total airborne dust concentration will be used for upgrading PPE from Level D and Level D-modified to Level C or Level C-modified using a half face respirator. Whenever total airborne dust concentrations in the worker's breathing zone reaches or exceeds the value of 10 mg/m^3 the use of full face respirators is required. These action levels are based on the Permissible Exposure Limit (PEL) for cadmium as determined by OSHA. OSHA has established a PEL for cadmium of .005 mg/m^3 as a time-weighted average value for an eight-hour work day and a forty-hour week.

If airborne dust concentrations at the work site (i.e. soil sample) exceed 1.2 mg/m^3 for three consecutive readings taken five minutes apart, the potential dust emission source will be evaluated and additional dust control measures mobilized and implemented until dust emissions can be reduced to below the action level.

Table 9-1

Action Levels*

Amount of Airborne Dust as Measured in the Breathing Zone	Required Level of Protection
Background level to 5 mg/m^3	Level D or Level D-Modified
5 mg/m^3 to 50 mg/m^3	Level C or Level C-Modified**
>50 mg/m^3	Cease operations and re-evaluate dust control measures

* These levels are based on the PEL for Cadmium.
** Respirator cartridge must protect against dust.

10.0 ANTICIPATED PERSONAL PROTECTIVE EQUIPMENT REQUIREMENTS FOR CLOSURE ACTIVITIES

Task Activity	Anticipated Personal Protective Equipment
A. Soil Sampling	Level D
B. Sediment Sampling	Level D-Modified
C. Groundwater Sampling	Level D-Modified
D. Site Survey	Level D-Modified
E. Site Walk	Level D-Modified
F. Routine Inspections	Level D-Modified

11.0 DECONTAMINATION

It is expected that the highest level of personal protective equipment necessary during the site Closure field activities will be Level D. The appropriate decontamination procedures are presented in Appendix E of this HSP and will be followed when PPE is used. Personnel wearing PPE will be required to follow these decontamination procedures for clothing and equipment.

12.0 EMERGENCY RESPONSE

12.1 NOTIFICATION OF SITE EMERGENCIES

Medical personnel at the primary hospital, fire, and police departments will be informed by site Health and Safety Officer of site hazards and activities prior to project initiation so that potential emergency situations can be handled most efficiently.

Table 12-1 contains Emergency Response Telephone Numbers. This table will be maintained at the specific task work area by the Site Health and Safety Officer or his designee, in a readily accessible location for use in case of an emergency. In the event of an emergency, appropriate authorities will then be immediately notified of the nature and extent of the emergency.

12.2 RESPONSIBILITIES

The Site Health and Safety Officer or his designee will be responsible for responding to emergencies which may develop during the Closure field activities. The Site Health and Safety Officer or his designee will:

1. Notify appropriate individuals, authorities and/or health care facilities of the hazards of the field activities;

2. Ensure that safety equipment such as first aid supplies and fire extinguishers are available at the specific task work area;

3. Have working knowledge of all safety equipment available at the specific task work area;

4. Ensure that the Site to hospital directions (Section 12.5) that detail the most direct route to the nearest hospital are included with the emergency telephone numbers.

12.3 ACCIDENTS AND INJURIES

In the event of a safety or health emergency at the specific task work area, appropriate emergency measures will immediately be taken to assist those who have been injured or exposed and to protect others from hazards. The Site Health and Safety Officer or his designee will be immediately notified and will respond appropriately. The AGC Project Coordinator will be immediately informed.

12.4 COMMUNICATIONS

Mobile phones will be available to use during field activities for emergency response and office communications. Public telephones will be located by Site Health and Safety Officer prior to the start-up of activities as back up to the mobile phones or as the primary off-site communication network.

12.5 SITE TO HOSPITAL DIRECTIONS

In the event of a serious injury, an ambulance shall be summoned for transportation to the nearest hospital. In the event of minor injuries or illness, the Site Health and Safety Officer or his designee may elect to have the injured person transported to the nearest hospital by company vehicle. If there is any doubt about the severity of the injury, an ambulance shall be used.

Directions to St. Francis Hospital in Beech Grove, Indiana are as follows:

- Exit site/turn right onto South Arlington Avenue.
- Take Arlington Avenue to the first intersection (five way intersection) make a hard right onto Big Four Road.
- Take Big Four Road to South Emerson/1st Avenue and turn right.
- Take South Emerson/1st Avenue; turn to Albany Street and turn left.
- Go approximately nine (9) blocks, St Francis Hospital will be on the corner of Albany Street and 17th Avenue.

Figure 12-1 provides a map to the nearest hospital from the Site.

TABLE 12-1
EMERGENCY TELEPHONE NUMBERS

AGC Project Manager	*Paul G. Stratman, P.E.*	*(610) 558-3300 (w)* non-responsive
AGC Closure Task Manager	*Stephen Kirschner, P.E.*	*(610) 558-3300 (w)* non-responsive
IDEM Project Coordinator	*Rebecca Eifert*	*(317) 232-3404 (w)*
National Response Center		*1 800 424-8802*

AGENCY	**TELEPHONE NUMBER**
Fire Department	*911 or (317) 784-4411*
Ambulance	*911 or (317) 783-8338*
Beech Grove Police	*911 or (317) 784-4411*
State Police	*(317) 232-8250*
St. Francis Hospital	*911 or (317) 783-8261 (Emergency Room) or (317) 787-3311 (General)*

NOTE: ***Marion County has an enhanced 911 service. The quickest way to obtain help from police, the fire department or the hospital is to use 911***

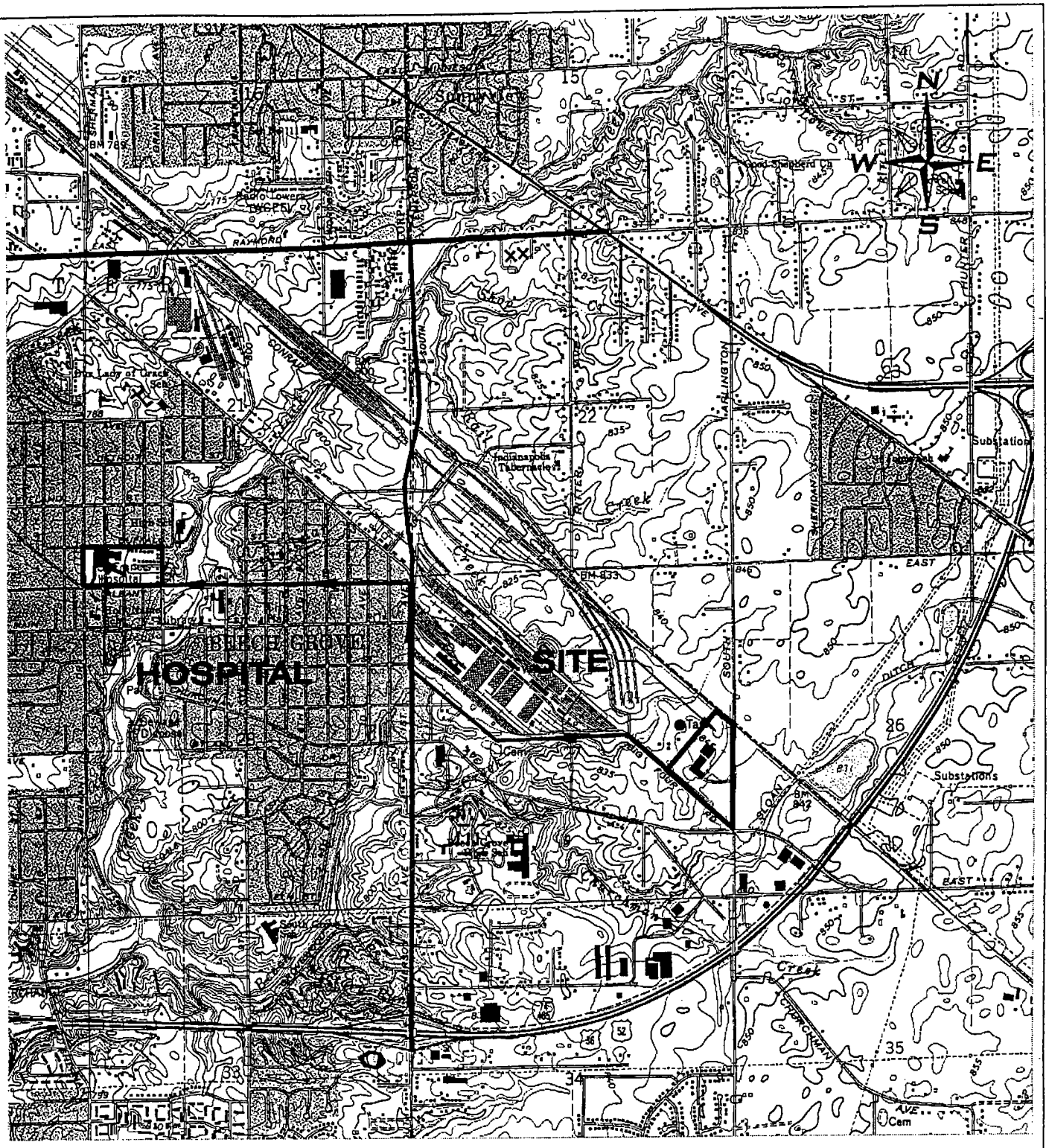

REFINED METALS CORPORATION
RCRA FACILITY INVESTIGATION WORK PLAN

BEECH GROVE, INDIANA

Date: 8/27/98	DIRECTIONS TO HOSPITAL
Scale: N.T.S.	
Drawn By: P.S.G.	Advanced GeoServices Corp.
Checked By: S.W.K.	Chadds Ford Business Campus, Rts. 202 & 1
Project Mgr: P.G.S.	Brandywine One, Suite 202
Dwg No. 98478-01	Chadds Ford, Pennsylvania 19317
Issued:	Project No. 98-478-01 — FIGURE: 12-1

J:\REFINED METALS\DRAWINGS\98478O1\98478-18

13.0 INCIDENT REPORTING PROCEDURE

Adherence to this site-specific Health and Safety Plan and any additional facility safety rules and regulations will significantly reduce the likelihood of personnel being exposed to toxic substances above permissible exposure limits and to physical hazards. However, in the event an incident does occur, it is imperative that specific reporting procedures be followed so that appropriate corrective action can be taken by the Site Health and Safety Officer and the Closure Task Manager. Upon notification of an incident, the Site Health and Safety Officer will contact the appropriate personnel for recommended medical diagnosis and, if necessary, treatment. The Closure Task Manager, Site Health and Safety Officer, and/or AGC Project Manager will investigate facility/site conditions to determine: (1) the severity of the incident, (2) the cause of the incident, and (3) the means to prevent the incident from re-occurring.

An Incident Reporting Form presented as page A-3 in Appendix A has been developed so that consistent and appropriate information is obtained regarding employee exposures. The form will be completed within 24 hours of an incident by the Site Health and Safety Officer and the exposed individual. The form will be filed at AGC with the employee's medical and safety records to serve as documentation of the incident and the actions taken.

Following any occupational incident that results in loss of consciousness, transfer to another job, medical treatment or restriction of work or motion, the incident must be entered on the Log of Summary of Occupational Injuries and Illnesses (OSHA No. 200) and the Supplementary Record of Occupational Injuries and Illness (OSHA No. 101). Both forms must be completed within six (6) days of the incident by the employer. OSHA No. 200 for the previous calendar year must be posted in an area where regular notices are posted for employees no later than February 1 and must remain posted until March 1.

OSHA No. 200 summaries must be held on file for at least five (5) years following the end of the calendar year for each respective summary log. This will allow for the inspection and copying of the logs at the discretion of the United States Department of Labor, and any states given the jurisdiction under the OSHA of 1970.

14.0 SPECIAL PRECAUTIONS AND PROCEDURES

The Site poses potential exposure risks for both chemical and physical hazards. The chemical risks have been explained in the previous sections. The potential for chemical exposure to hazardous substances is significantly reduced through the use of personal protective clothing, engineering controls, and implementation of safe work practices.

Other potential hazards that are associated with the site activities include working around heavy equipment, heat stress or cold exposure (depending on time of year), and site debris. Precautionary measures discussed in the following sections have been established to reduce these risks to a minimum during site activities.

14.1 HEAVY MACHINERY/EQUIPMENT

All site employees must remain aware of those site activities that involve the use of heavy equipment and machinery. Respiratory protection and protective eye wear may be required to be worn during site activities. This protective equipment significantly reduces peripheral vision of the wearer. Therefore, it is essential that all employees at the site exercise extreme caution during operation of equipment and machinery to avoid physical injury to themselves or others.

14.2 CONSTRUCTION MATERIAL AND SITE REFUSE

All construction materials and site refuse should be contained in appropriate areas or facilities. All trash will be immediately and properly disposed. It is important to maintain clear areas of egress in case of an emergency.

14.3 HEAT STRESS/COLD EXPOSURE

It is anticipated that heat stress/cold exposure could be a significant factor in the health and safety of the workers. If heat stress does become a significant factor, monitoring will be employed as necessary so that personnel do not suffer adverse effects from heat stress. See Appendix F for specific heat stress factors, monitoring and prevention procedures.

The effects of cold exposure can be less apparent to the victim. It is extremely important that partners within the buddy system visually inspect their fellow workers often. Redness of the skin indicates the onset of cold exposure. A white or pale skin color, especially on extremities such as the nose, cheeks, chin, ears fingers, and toes are indications that frost bite is setting in. Individuals should dress in layers, peeling off each layer as they get warmer from exertion. The Site Health and Safety Officer should keep informed of the wind-chill factor and will inspect workers during cold exposure conditions. See Appendix F for specific cold exposure guidance.

14.4 ADDITIONAL SAFETY PRACTICES

The following are important safety precautions which will be enforced during the Closure field activities when contact with potential hazardous waste materials is possible.

1. Eating, drinking, chewing gum or tobacco, smoking, or any practice that increases the probability of hand-to-mouth transfer and ingestion of material is prohibited in any field task work area.

2. Hands and face must be thoroughly washed upon leaving the work area and before eating, drinking, or any other activity.

3. Whenever decontamination procedures for outer garments are in effect, the entire body should be thoroughly washed as soon as possible after departing the Site. At a minimum, personnel will be required to wash face and hands thoroughly upon departing the Site.

4. No excessive facial hair which interferes with the effectiveness of a respirator will be permitted on personnel required to wear respiratory protection equipment. The respirator must seal against the face so that the wearer receives air only through the air purifying cartridges attached to the respirator. Fit testing shall be performed prior to respirator use to ensure a proper seal is obtained by the wearer.

5. Medicine and alcohol can accentuate the effect from exposure to certain compounds. On-site personnel should consult with their physician regarding the use of prescribed drugs during the groundwater monitoring field activities. Alcohol or anyone exhibiting the affects of alcohol will not be permitted on the RMC site.

6. Authorized personnel and equipment in the work areas should be minimized, consistent with effective site operations.

7. Work areas for various operational activities must be established.

8. Procedures for leaving the work area will be planned and implemented by the Health and Site Safety Officer prior to going to the Site. Work areas and decontamination procedures will be established by the Site Health and Safety Officer on the basis of prevailing site conditions.

9. Respirators will be issued by each employer for the exclusive use of their employees and will be cleaned and disinfected after each use by the employee.

10. Safety gloves (supplied by the employer) and boots, if applicable, shall be taped to the disposable, chemical protective suits (supplied by the employer) as necessary.

11. Noise mufflers or ear plugs (supplied by the employer) may be required for all field personnel working around heavy equipment. This requirement will be at the discretion of the Site Health and Safety Officer. Disposable, form-fitting plugs are preferred.

12. If applicable, cartridges (supplied by the employer) for air-purifying respirators in use will be changed as directed by the Site Health and Safety Officer.

HSP

APPENDIX A
FORMS

PLAN ACCEPTANCE FORM
SITE HEALTH AND SAFETY PLAN
Closure FIELD ACTIVITIES

INSTRUCTIONS: This form is to be completed by each person working on the RMC site located in Marion County, Indiana and returned to Advanced GeoServices Corp. office located in Chadds Ford, Pennsylvania.

Job No. _____

Project _____

I represent that I have read and understand the contents of the Closure Site Health and Safety Plan for the RMC in Marion County, Indiana and agree to perform my work in accordance with it.

_____
Signed

_____
Print Name

_____
Company

_____
Date

CONTRACTOR/SUBCONTRACTOR
HEALTH AND SAFETY COMPLIANCE CERTIFICATION

Project Name_____ Project Number_____

Contractor/Subcontractor: Name_____

Address_____

_____

Phone Number_____

1. Contractor/subcontractor certifies that the following personnel to be employed during the Consent Decree field activities have met the requirements of the OSHA Hazardous Waste Operation Standard (29 CFR 1910.120) and all other applicable OSHA standards as required by the RMC Consent Decree Site Health and Safety Plan.

Contractor/Subcontractor Personnel	Training	Respirator Certification	Medical Exam
example: John Smith	3/6/95 AGC	3/6/95 AGC (small MSA)	3/7/95 West Chester

2. Contractor/Subcontractor certifies that it has received a copy of the RMC's Closure Site Health and Safety Plan and will be responsible for their employees compliance with its requirements.

3. Contractor/Subcontractor further certifies that it has read and understands and will comply with all provisions of its contractual agreement.

_____ _____

Owners (Contractor/Subcontractor) signature Date

INCIDENT REPORTING FORM

CLIENT NAME:_____

NAME OF PERSON REPORTING INCIDENT:_____

DATE OF INCIDENT:_____ TIME OF INCIDENT:_____

LOCATION OF INCIDENT:_____

NAME OF INJURED PERSON:_____

EMPLOYEE JOB TITLE:_____

TYPE OF INCIDENT:_____

NATURE AND EXTENT OF INJURY:_____

SPECIFIC TASK AT TIME OF INCIDENT:_____

LEVEL OF PERSONAL PROTECTIVE EQUIPMENT WORN AT TIME OF INCIDENT:_____

WAS FIRST AID GIVEN?_____ IF SO, WHEN, BY WHOM?_____

NAME AND ADDRESS OF DOCTOR/HOSPITAL:_____

_____

BRIEF SUMMARY OF INCIDENT:_____

_____

SUMMARIZE WHAT YOU CONSIDER CAUSE THE INCIDENT:_____

_____

SUGGESTED PREVENTIVE MEASURES:_____

_____

CORRECTIVE ACTIONS TAKEN:_____

_____

EMPLOYEE SIGNATURE:_____

SITE HEALTH AND SAFETY OFFICER SIGNATURE:_____

AGC PROJECT COORDINATOR SIGNATURE:_____

TIME & DATE OF REPORT:_____

APPENDIX B

PERSONNEL TRAINING

General site workers (such as equipment operators, general laborers and supervisory personnel) engaged in hazardous substance removal or other activities which expose or potentially expose workers to hazardous substances and health hazards shall receive a minimum of 40 hours of classroom instruction, and a minimum of three days actual field experience under the direct supervision of a trained, experienced supervisor. The training course must have included the following material at a minimum:

1. Health and Safety Officer and Site Management Responsibilities. -personnel must understand Health and Safety Officer and Site Management responsibilities and authority.

2. Site-Specific Health and Safety Hazards - personnel must be informed of specific hazards related to site and site operations.

3. Personal Protection Equipment (PPE) - personnel must be trained in proper use of personal protective equipment.

4. Safe Work Practices/Engineering Controls - personnel must be informed of appropriate work practices and engineering controls that will reduce the risk of exposure to site hazards.

5. Safety Equipment Use - personnel must understand the use of monitoring instruments and other safety equipment.

6. Medical Surveillance Program - personnel must be informed of requirements for medical surveillance of hazardous waste site employees.

7. Site Control Methods - personnel must understand site methods used to reduce exposure to on-site personnel.

8. Decontamination Procedures - personnel must be trained in proper decontamination operation and procedures.

9. Emergency Response - personnel must be trained in proper emergency response operation and procedures.

10. Confined Space Entry/Special Hazards - personnel involved in specific hazardous activities, such as confined space entry and drum handling, must receive training in appropriate techniques to employ during such operations.

Workers on site only occasionally for a specific limited task (such as, but not limited to, land surveying or site walk through) and who are unlikely to be exposed over permissible exposure limits and published exposure limits shall receive a minimum of 24 hours of classroom instruction and the minimum of one day actual field experience under the direct supervision of a trained, experienced supervisor.

Workers regularly on site who work in areas which have been monitored and fully characterized indicating that exposures are under permissible exposure limits, where respirators are not necessary, and the characterization indicates that there are no health hazards or the possibility of an emergency developing, shall receive a minimum of 24 hours of instruction off the site and the minimum of one day actual field experience under the direct supervision of a trained, experienced supervisor.

Workers with 24 hours of training who meet the criteria for 24 hour training cited above, and who become general site workers or who are required to wear respirators, shall have the additional 16 hours and two days of training necessary to total the training specified for the 40 hour training criteria.

Health and Safety training programs shall comply with criteria set forth by OSHA as per final regulation 29 CFR 1910.120. This program will instruct employees on general health and safety principles and procedures, proper operation of monitoring instruments, and use of personal protective equipment.

In addition, field employees will undergo site-specific training prior to the start-up of any given task. As activities change at a particular site, related training will address potential hazards and associated risks, site operating procedures, emergency response, and site control methods to be employed.

Specialized training will be provided as dictated by the nature of the project activities. Specialized training will be provided for activities such as confined space entry, excavations and handling of unidentified substances. However, none of these activities are anticipated for the RMC Site. Employees involved in these types of activities will be given off-site instruction regarding the potential hazards involved with safety activities and the appropriate health and safety procedures to be followed. Off-site instruction is meant to include any area where employees will not be exposed to site hazards.

This Health and Safety Plan must be distributed to all contractor/ subcontractors prior to the start of field activities. A pre-operation meeting will be held to discuss the contents of the Plan. Specialty training will be provided as determined by task and responsibility. All training of AGC personnel will be conducted under direct supervision of the Health and Safety Officer or his designee. Exemption from training may be approved by the Health and Safety Officer in conjunction with the Project Coordinator.

HSP

APPENDIX C
MEDICAL MONITORING

APPENDIX C

MEDICAL MONITORING

The Occupational Safety and Health Administration (OSHA) has established requirements for a medical surveillance program designed to monitor and reduce health risks for employees potentially exposed to hazardous materials (29 CFR 1910.120). This program has been designed to provide baseline medical data for each employee involved in hazardous waste operations including field activities, and to determine his/her ability to wear personal protective equipment, such as chemical resistant clothing and respirators. Employees who wear or may wear respiratory protection must be provided respirators as regulated by 29 CFR 1910.134. This Standard requires that an individual's ability to wear respiratory protection be medically certified before he/she performs designated duties. Where medical requirements of 20 CFR 1910.120 overlap those of 29 CFR 1910.134, the more stringent of the two will be enforced.

The medical examination must be administered on a pre-employment and annual basis and as warranted by symptoms of exposure or specialized activities. These examinations shall be provided by employers without cost or loss of pay to the employee.

The medical examination shall include at the minimum the following:

1. Medical History and Physical, including:
    - Medical questionnaire;
    - Completion of medical history with occupational risk factor analysis;
    - Examination by physician;
    - Evaluation of test results; and
    - Brief report sent to employer covering specific requested areas as well as pertinent positive findings; report sent to family physician and employee by request;
2. Pulmonary Function Testing;
3. Electrocardiogram (baseline, and at the discretion of examining physician);
4. Chest X-Ray (baseline, and at the discretion of examining physician);

5. Lab Tests, including:

- Urinalysis;
- Blood Chemistry Profile;
- Complete blood Count with differential;

6. Vision Screen; and

7. Audiogram.

The examining physician is required to make a report to the employer of any medical condition which would place such employee at increased risk of wearing a respirator or other personal protective equipment. Each employer engaged in site work shall assume the responsibility of maintaining site personnel medical records as regulated by 29 CFR 1910.120, where applicable. Exemption from the medical surveillance program may be allowed by the Health & Safety Officer in conjunction with the Project Manager. These exemptions will be based on their interpretation of the requirements of 1910.120 relative to each individual exemption request.

Basically, an employee is required by federal regulation to have medical monitoring if the employee is or may be exposed to hazardous substances or health hazards at or above the permissible exposure limits for these substances, without regard to the use of respirators, for 30 days or more a year.

All employers contracted to work at the site designated by this plan will be responsible to ensure their employees have received the proper medical tests as regulated by 29 CFR 1910.20 and shall provide AGC with certification of same.

HSP

APPENDIX D
PERSONAL PROTECTIVE EQUIPMENT

APPENDIX D

PERSONAL PROTECTIVE EQUIPMENT

PROTECTIVE EQUIPMENT

All personnel must be provided with appropriate personal safety equipment and protective clothing by their employer. Each individual will be properly trained in the use of this safety equipment before the start of field activities. Safety equipment and protective clothing shall be used as directed by the Site Health and Safety Officer. All such equipment and clothing will be cleaned and maintained in proper condition by project personnel. The Site Health and Safety Officer will monitor the maintenance of personal protective equipment to ensure proper procedures are followed.

Personal protective equipment will be worn at all appropriate times, as designated by the Health and Safety Plan. Levels of protective clothing and equipment have been assigned to specific work tasks (Section 10.0).

The personal protective equipment levels designated below are in conformance with EPA criteria for Levels B, C, and D protection. In addition, Level C-Modified and Level D-Modified personal protection has been developed for specific tasks. However, Level B or Level C protection is not anticipated for any of the RMC Site Closure field activities. All respiratory protective equipment use will be approved by NIOSH/MSHA.

LEVEL B PROTECTION

A. Pressure demand cascade air-line system or other suitable self-contained, pressure demand breathing apparatus.

B. Chemical-resistant clothing such as Tyvek®, Poly-coated Tyvek®, or Saranex®. Suits will be one piece with hoods, booties and elastic wrist bands.

C. Outer nitrile and inner latex surgical gloves

D. Steel toe boots with rubber overboots

E. Water-resistant tape over protective clothing as necessary

F. Hard hat

G. Options as required:

1. Coveralls
2. Disposable outer boots
3. Face shield
4. Escape mask
5. Hearing protection

LEVEL C PROTECTION

A. Full-face or half-face air purifying respirator equipped with appropriate organic vapor/dust canisters or cartridges.

B. Chemical-resistant clothing such as Poly-coated Tyvek® or Saranex®.

C. Outer nitrile gloves and inner latex surgical gloves

D. Steel toe boots with rubber overboots

E. Hard Hats

F. Safety Glasses

G. Options as required:

1. Coveralls
2. Disposable outer boots
3. Escape mask
4. Face shield
5. Hearing protection
6. Water-resistant tape

LEVEL C-MODIFIED PROTECTION

A. Full-face or half-face air purifying respirator equipped with appropriate organic vapor/dust canisters or cartridges.

B. Coveralls or long sleeve shirts and pants.

C. Outer nitrile gloves and inner latex surgical gloves.

D. Steel toe boots

E. Hard Hats

F. Safety Glasses

G. Options as required:

1. Disposable outer boots
2. Escape mask
3. Face shield
4. Hearing protection
5. Water-resistant tape

LEVEL D PROTECTION

A. Coveralls or long sleeve shirts and long pants, unless otherwise directed by the Health and Safety Officer.

B. Outer nitrile gloves at a minimum for all hazardous or potentially hazardous material handling activities. Inner latex surgical gloves are recommended where practical.

C. Steel toe boots

D. Hard hat

E. Safety glasses

F. Options as required:

1. Disposable outer boots
2. Hearing protection

LEVEL D-MODIFIED PROTECTION

A. Outer nitrile gloves at a minimum for all hazardous or potentially hazardous material handling activities. Inner latex surgical gloves are recommended where practical.

B. Steel toe boots

C. Safety glasses

D. Options as required:

1. Disposable outer boots
2. Hearing protection
3. Hard Hats

HSP

APPENDIX E
DECONTAMINATION

APPENDIX E

DECONTAMINATION

E-1 GENERAL

Personnel involved with hazardous material handling may be exposed to compounds in a number of ways, despite the most stringent protective procedures. Personnel may come in contact with particulates in the air, or may come in contact with site media while performing specific work tasks. Use of monitoring instruments and equipment can also result in exposure to hazardous substances.

In general, decontamination involves scrubbing with a non-phosphate soap/water solution followed by clean water rinses. All disposable items will be disposed of in a dry container. Certain parts of contaminated respirators, such as harness assemblies and leather or cloth components, are difficult to decontaminate. If grossly contaminated, they may have to be discarded. Rubber components can be soaked in soap and water and scrubbed with a brush. In addition to being decontaminated, all respirators, non-disposable protective clothing, and other personal articles must be sanitized before they can be used again unless they are assigned to individuals. The manufacturer's instructions should be followed in sanitizing the respirator masks. The Site Health and Safety Officer or his designee will be responsible for supervising the proper decontamination of protective equipment.

E-2 STANDARD PPE DECONTAMINATION

The Site Health and Safety Officer or his designee will monitor decontamination procedures to ensure their effectiveness. Modifications of the decontamination procedure may be necessary as determined by the Site Health and Safety Officer or his designee. Decontamination procedures for PPE Level B, C and D are as follows:

Level B - Personal Protection Decontamination Procedure

Step 1 - Segregated Equipment Drop

Deposit equipment (tools, sampling devices, notes, monitoring instruments, radios, etc.) used on the site onto plastic drop cloths.

Step 2 - Boot Covers and Glove Wash

Outer boot covers and outer gloves should be scrubbed with a decontamination solution of detergent and water.

Step 3 - Rinse Off Boot Covers and Gloves

Decontamination solution should be rinsed off boot covers and gloves using generous amounts of water. Repeat as many times as necessary.

Step 4 - Tape Removal

Remove tape from around boots and gloves and place into container with plastic liner.

Step 5 - Boot Cover Removal

Remove disposable boot covers and place into container with plastic liner.

Step 6 - Outer Glove Removal

Remove outer gloves and deposit in container with plastic liner.

Step 7 - Suit/Safety Boot Wash

Completely wash splash suit, SCBA, gloves, and safety boots. Care should be exercised that no water is allowed into the SCBA regulator.

Step 8 - Suit/Safety Boot Rinse

Thoroughly rinse off all decontamination solution from protective clothing.

Step 9 - Tank Changes

This is the last step in the decontamination procedure for those workers wishing to change air tanks and return to the exclusion zone. The worker's air tank is exchanged, new outer glove and boot covers are donned, and joints taped.

Step 10 - Removal of Safety Boots

Remove safety boots and deposit in container with a plastic liner.

Step 11 - SCBA Backpack Removal

Without removing face piece, remove the SCBA backpack and place it on a table. Then disconnect the face piece from the remaining SCBA unit and proceed to the next station.

Step 12 - Splash Suit Removal

With care, remove splash suit. The exterior of the splash suit should not come in contact with any inner layers of clothing.

Step 13 - Inner Glove Wash

The inner gloves should be washed with a mild decontamination solution (detergent/water).

Step 14 - Inner Glove Rinse

Generously rinse inner gloves with water.

Step 15 - Face Piece Removal

Without touching face with gloves, remove face piece. Deposit face piece into a container which has a plastic liner.

Step 16 - Inner Glove Removal

Remove inner glove and deposit in container with plastic liner.

Step 17 - Field Wash

Wash hands and face thoroughly. If highly toxic, skin corrosive, or skin-absorbent materials are known or suspected to be present, take a shower or a sponge bath as soon as possible.

Level C Personal Protection Decontamination Procedure (Use Appropriate Decontamination Procedures for Level C-Modified

Step 1 - Segregated Equipment Drop

Deposit equipment used on site (tools, sampling devices and containers, monitoring instruments, radios, clipboards, etc.) on plastic drop cloths or in different containers with plastic liners. Segregation at the drop reduced the probability of cross-contamination. During hot weather operations, cool down stations may be set up within this area.

Step 2 - Boot Cover and Glove Wash

Scrub outer boot covers and gloves with decontamination solution of detergent and water.

Step 3 - Boot Cover and Glove Rinse

Rinse off decontamination solution from station 2 using generous amounts of water. Repeat as many times as necessary.

Step 4 - Tape Removal

Remove tape around boots and gloves and deposit in container with plastic liner.

Step 5 - Boot Cover Removal

Remove boot covers and deposit in container with plastic liner.

Step 6 - Outer Glove Removal

Remove outer gloves and deposit in container with plastic liner.

Step 7 - Suit and Boot Wash

Wash splash suit, gloves, and safety boots. Scrub with long-handle scrub brush and decontamination solution.

Step 8 - Suit and Boot, and Glove Rinse

Thoroughly rinse off decontamination solution using water. Repeat as many times as necessary.

Step 9 - Canister or Mask Change

If worker leaves exclusion zone to change canister or mask, this is the last step in the decontamination procedure. Worker's canister and/or mask is exchanged, new outer gloves and boot covers donned, and joints taped. Worker returns to duty.

Step 10 - Safety Boot Removal

Remove safety boots and deposit in container with plastic liner.

Step 11 - Splash Suit Removal

With assistance of helper, remove splash suit. Deposit in container with plastic liner.

Step 12 - Inner Glove Wash

Wash inner gloves with decontamination solution.

Step 13 - Inner Glove Rinse

Rinse inner gloves with water.

Step 14 - Face Piece Removal

Remove face piece. Deposit in container with plastic liner. Avoid touching face with fingers.

Step 15 - Inner Glove Removal

Remove inner gloves and deposit in container with liner.

Step 16 - Field Wash

Wash hands and face with soap and water. Shower or sponge bath if highly toxic, skin-corrosive or skin absorbable materials are known or suspected to be present.

Level D Personal Protection Decontamination Procedure (Use Appropriate Decontamination Procedures for Level D-Modified

Step 1 - Boot Cover and Glove Wash (if applicable)

Scrub outer boot covers and gloves with decontamination solution or detergent and water.

Step 2 - Boot Cover and Glove Rinse (if applicable)

Rinse off decontamination solution from station 1 using generous amounts of water.

Step 3 - Boot Cover Removal (if applicable)

Remove boot covers and deposit in container with plastic liner.

Step 4 - Glove Removal (if applicable)

Remove gloves and deposit in container with plastic liner.

Step 5 - Coverall Removal (if applicable)

Remove coverall and deposit in container with plastic liner.

Step 6 - Field Wash

Wash hands and face with soap and water.

HSP

APPENDIX F
TEMPERATURE EXTREME GUIDELINES

APPENDIX F

TEMPERATURE EXTREME GUIDELINES

F-1 HEAT STRESS

The physical work activities during the Closure Field Activities are anticipated to be low. However, if applicable, the Site Health and Safety Officer has the responsibility to monitor heat stress throughout each field task and to make work/rest recommendations as appropriate.

PHYSIOLOGICAL FACTORS

Physical Condition: Physical fitness is a major factor influencing a persons ability to perform work. A fit person, relative to an unfit person, will have:

Less physiological strain
Lower heart rate
Lower body temperature
More efficient sweating mechanism
Slightly lower oxygen consumption
Slightly lower carbon dioxide production

Level of acclimatization is the degree to which a workers body has physiologically adjusted to working under hot environments. An acclimatized person generally:

- Has lower heart rates and body temperature.
  Sweats sooner and more profusely.
  Sweat contains lower levels of electrolytes.

- Acclimatized persons enclosed in a impermeable suit sweat more profusely and therefore actually face a greater danger of heat exhaustion due to rapid dehydration.

Age:

Maximum work capacity usually declines with increasing age, but not always.

Gender:

Females tolerate heat as well as males.
Females work capacity averages 10% - 30% less than males.

Height:

The ability of a body to get rid of heat depends on the ratio of its surface area to its weight.

HEAT RELATED DISORDERS

During the summer months, or in hot and humid environments, heat related illnesses are a serious problem. Those at risk are workers not acclimatized and/or those wearing impermeable clothing. The four most common heat related disorders are shown from least to most serious as follows.

Heat Rash:

The most common heat rash is prickly heat, which appears as red bumps. It usually occurs in areas where the clothing is restrictive. The rash areas can become easily infected if not treated and allowed to dry.

Heat Cramps:

These are not uncommon in individuals who work hard in the heat. They are attributable to a continued loss of salt, accompanied by large intakes of water without appropriate replacement of electrolytes. Cramps often occur in the muscles principally used during work and can be treated by rest, ingestion of water, and electrolyte solution.

Heat Exhaustion:

- Symptoms:

  - Fatigue
  - Weakness
  - Headache
  - Vomiting
  - Fainting
  - Pale, clammy skin*
  - Normal body temperature*
  - Profuse sweating*
  - Dilated pupils

  * Denotes major differences between Heat Exhaustion and Heat Stroke.

- Treatment:

  - Remove from hot area
  - Apply cool cloths
  - Loosen or remove clothing

  Allow small sips of water or electrolyte solution, if victim is conscious and not vomiting.

- Causes:

  - High air temperatures
  - High humidity
  - Low air movement
  - Hard work
  - Insufficient fluid intake
  - Not enough breaks
  - Impermeable clothing

- Preventative Steps:

  - Wise use of breaks
  - Replenishment of fluids
  - Common sense

  Do not use soft drinks, coffee, tea, or any caffeine substance as a substitute for fluids on breaks.

Heat Stroke:

- Symptoms:

  - Dizziness
  - Confusion
  - Collapse
  - Angry behavior
  - Delirium
  - Hot, dry skin*
  - Elevated core temperature*
  - Red Skin*
  - Constricted pupils*

  * Denotes major differences between Heat Exhaustion and Heat Stroke.

  THIS IS A MEDICAL EMERGENCY!

- Treatment:

  - Remove from hot area
  - Remove clothing
  - Cool person down as quickly as possible

- Causes:

  - High air temperature
  - High humidity
  - Low air movement
  - Hard work
  - Insufficient fluid intake
  - Lack of breaks
  - Impermeable clothing

- Preventative Steps:

  - Sufficient number of fluid breaks
  - Replenishment of fluids
  - Common sense

  Do not drink soft drink, coffee, tea, or any type of caffeine drink as a substitute for fluids on breaks.

MONITORING

Because the incidence of heat stress depends on a variety of factor, all workers (if applicable) even those not wearing protective equipment, should be monitored.

For workers wearing semipermeable or impermeable encapsulating ensembles, workers should be monitored when the temperature in the work area is above 70°F (21°C).

To monitor the workers for heat stress measure:

Heart rate. Count the radial pulse during a 30-second period as early as possible in the rest period.

- If the heart rate exceeds 110 beats per minute at the beginning of the rest period, shorten the next work cycle by one-third and keep the rest period the same.

- If the heart rate still exceeds 100 beats per minute at the next rest period, shorten the following work cycle by one-third.

Oral temperature. Use a clinical thermometer (3 minutes under the tongue or similar device to measure the oral temperature at the end of the work period (before drinking).

- If oral temperature exceeds 99.6° (37.6°C) shorten the next work cycle by one-third without changing the rest period.

- If oral temperature still exceeds 99.6° (37.6°C) at the beginning of the next rest periods, shorten the following work cycle by one third.

- Do **not** permit a worker to wear a semipermeable or impermeable garment when his/her oral temperature exceeds 100.6°F (38.1°C).

PREVENTION

Proper training and preventive measures will help avert serious illness and loss of work productivity. Preventing heat stress is particularly important because once someone suffers from heat stroke or

heat exhaustion, that person may be predisposed to additional heat injuries. To avoid heat stress, management may take the following steps:

Adjust work schedules:

- Modify work/rest schedules according to monitoring requirements
- Mandate work slowdowns as needed.
- Rotate personnel: alternate job functions to minimize overstress or overexertion at one task.
- Add additional personnel to work teams.
- Perform work during cooler hours of the day if possible or at night if adequate lighting can be provided.

Provide shelter (air-conditioned, if possible) or shaded areas to protect personnel during rest periods.

Maintain workers body fluids at normal levels. This is necessary to ensure that the cardiovascular system functions adequately. Daily fluid intake must approximately equal the amount of water lost in sweat, i.e., 8 fluid ounces (0.23 liters) of water must be ingested for approximately every 8 ounces (0.23 kg) of weight lost. The normal thirst mechanism is not sensitive enough to ensure that enough water will be drunk to replace lost sweat. When heavy sweating occurs, encourage the worker to drink more. The following strategies may be useful:

- Maintain water temperature at 50° to 60°F (10° to 15.6°C).
- Provide small disposable cups that hold about 4 ounces (0.1 liter).
- Have workers drink 16 ounces (0.5 liters) of fluid (preferably water or dilute drinks) before beginning work.
- Urge workers to drink a cup or two every 15 to 20 minutes, or at each monitoring break. A total of 1 to 1.6 gallons (4 to 6 liters) of fluid per day are recommended, but more may be necessary to maintain body weight.
- Weigh workers before and after work to determine if fluid replacement is adequate.

Encourage workers to maintain an optimal level of physical fitness:

- Where indicated, acclimatize workers to site work conditions: temperature, protective clothing and workload. Acclimatization can occur after just a few days of

exposure to a hot environment. NIOSH recommends a progressive 6-day acclimatization period for the unacclimatized worker before allowing him/her to do full work on a hot job. Under this regimen, the first day of work on site is begun using only 50 percent of the anticipated workload and exposure times, and 10 percent is added each day through day 6. With fit or trained individuals, the acclimatization period may be shortened 2 or 3 days. However, workers can lose acclimatization in a matter of days. and work regiments should be adjusted to account for this.

- Urge workers to maintain normal weight levels.

Provide cooling devices to aid natural body heat exchange during prolonged work or sever heat exposure. Cooling devices include:

- Field showers or hose-down areas to reduce body temperature and/or to cool off protective clothing.

- Cooling jackets, vests or suits.

Train workers to recognize and treat heat stress. As part of training, identify the signs and symptoms of heat stress.

F-2 COLD EXPOSURE

Personnel working outdoors in low temperatures are subject to cold exposure. Toes, fingers, ears, cheeks, and the nose are especially vulnerable to cold exposure.

Factors influencing the development of a cold injury include ambient temperature, wind velocity, humidity, type of exposure, and duration of exposure. Frostbite and hypothermia are two cold injuries which may occur.

Frostbite is a local injury resulting from cold exposure. It is characterized by a white or pale coloring of the skin. Its symptoms are exhibited in the following stages:

- Just before frostbite occurs, the affected skin may be slightly flushed;

- The skin changes to white or grayish-white in appearance;

- Pain is sometimes felt early but subsides later (often there is no pain);

- Blisters may appear later;

- The affected part feels intensely cold and numb; and

- The victim frequently is not aware of frostbite.

The objectives of first aid are to protect the frozen area from injury, to warm the affected area rapidly, and to maintain respiration.

Hypothermia is an overall cooling of the body. Progressive clinical presentations of hypothermia are presented in Table F-1.

To avoid cold exposure injuries, personnel should dress in layers, removing clothing as they generate heat from working. The buddy system must be instituted to ensure signs of frostbite or hypothermia will be noted as soon as possible. Generally, it is easier for someone else to see theses signs before the person who is exhibiting them will notice. A work-rest regimen, designated by the Site Health and Safety Officer, should be implemented early to avoid personnel casualties. If any cold exposure injuries are detected, the Site Health and Safety Officer must be notified immediately.

Table F-1

PROGRESSIVE CLINICAL PRESENTATIONS OF HYPOTHERMIA*

Core Temperature

°C	°F	Clinical Signs
37.6	99.6	"Normal" rectal temperature
37	98.6	"Normal" oral temperature
36	96.8	Metabolic rate increases in an attempt to compensate for heat loss
35	95.0	Maximum shivering
34	93.2	Victim conscious and responsive, with normal blood pressure
33	91.4	Sever hypothermia below this temperature
32	89.6	Consciousness clouded; blood pressure becomes difficult to obtain; pupils dilated but react to light; shivering ceases
31	87.8	
30	86.0	Progressive loss of consciousness; muscular rigidity increases; pulse and blood pressure difficult to obtain; respiratory rate decreases
29	84.2	
28	82.4	Ventricular fibrillation possible with myocardial irritability
27	80.6	Voluntary motion ceases; pupils nonreactive to light; deep tendon supeClosurecial reflexes absent
26	78.8	Victim seldom conscious
25	77.0	Ventricular fibrillation may occur spontaneously
24	75.2	Pulmonary edema
22	71.6	Maximum risk of ventricular fibrillation
21	69.8	
20	68.0	Cardiac standstill
18	64.4	Lowest accidental hypothermia victim to recover
17	62.6	Isoelectric electroencephalogram
9	48.2	Lowest artificially cooled hypothermia patient to recover

* Presentations approximately related to core temperature. Reprinted from the January 1982 issue of *American Family Physician*, published by the American Academy of Family

ATTACHMENT 2
MONITORING WELL LOGS

RECORD OF WATER WELL

State Form 35680 (R3 / 11-87)

Mail complete record within 30 days to:
INDIANA DEPARTMENT OF NATURAL RESOURCES
Division of Water
2475 Directors Row
Indianapolis, Indiana 46241
Telephone number (317) 232-4160

(Completely)

WELL LOCATION

County where drilled	Civil township	Township	Range	Section
Marion				

Driving directions to the well location (include county road names, number, subdivisions lot number with consideration to intersecting, road and trip origination there is space for a map on reverse side.

Refined Metals is located at 3700 South Arlington Ave. in Beech Grove, Indiana. The entrance to the plant is on the west side of South Arlington Ave., approximately 500 feet north of the intersection of Churchman Ave. and South Arlington Ave. For the specific location of Well No. 1 see attached site plan.

OWNER - CONTRACTOR

Name of well owner: Refined Metals Corporation	Telephone Number: (317) 787-6364
Address (Street and number, city, state): 3700 South Arlington Ave., Beech Grove, Indiana	ZIP code: 46218
Name of building contractor: Not Applicable	Telephone number: Not Applicable
Address (Street and number, city, state): Not Applicable	ZIP code: Not Applicable
Name of drilling contractor: Fuller, Mossbarger, Scott and May, Civil Engineers, Inc.	Telephone number: (606) 263-3126
Address (Street and number, city, state): 1409 North Forbes Road, Lexington, Kentucky	ZIP code: 40511

Name of equipment operator	License number	Date of completion
Craig Avery/David Mullins	802	10/11/90

CONSTRUCTION DETAILS

Use of well: ☐ Home ☐ Industry ☐ Test ☐ Irrigation ☐ Public supply ☐ Stock ☒ Other (specify): Monitoring Well No. 1

Method of drilling: ☐ Rotary ☐ Rev. rotary ☐ Cable tool ☐ Jet ☐ Bucket rig ☒ Other Auger

Casing length	Material	Diameter
20 feet	PVC	2 inches

Screen length	Material	Diameter
10 feet	PVC	20 inches

Screen slot size	Total depth of well
.010 inches	30.0 feet

Depth of pump setting	Water quality (Clear, cloudy, odor, etc.)
N/A	pH=7.9; Conductivity = 1200 uS

Type of pump: ☐ Shallow-well jet ☐ Submersible ☐ Deep-well jet ☒ Other (specify): No Pump

WELL CAPACITY TEST

Check one	Test rate
Not Applicable ☐ Air ☐ Bailing ☐ Pumping	Not Applicable gpm hrs.

Drawdown	Static level
Not Applicable feet	(depth to water) 9.0 feet

WELL LOG

Formations: type of material	From (Feet)	To (Feet)
Fill; intermixed clay, sandy clay and construction debris	0	5.0
Silty clay, brown, moist, medium stiff; with some sand and gravel	5.0	21.0
Sand, brown, fine to medium grained, medium dense	21	30.0
Hole drilled and well completed to	30.0	

(Additional space for well log on reverse side)

GROUTING INFORMATION

Grout material	Depth of grout
Cement/ Bentonite	From 6 To 16

Method of installation	Number of bags used
Tremie	5

WELL ABANDONMENT

Sealing material	Depth filled
	From To

Method of installation	Number of bags used

I hereby swear or affirm, under the penalties for perjury that the information submitted herewith is to the best of my

Signature of owner or authorized representative: [signature]

Date: 11/2/90

FULLER, MOSSBARGER, SCOTT AND MAY
CIVIL ENGINEERS, INC.
LEXINGTON, LOUISVILLE, KENTUCKY

SUBSURFACE LOG

N.	Marion, Indiana	PROJECT NUMBER:	90226
JECT NAME:	Refined Metals Corporation	LOCATION:	Hole #1
FACE ELEVATION:	N/A	DATE STARTED:	10/11/90 COMPLETED: 10/11/90
ILLER:	Craig Avery/David Mullins	LOGGED BY:	Don Armour
JECT TYPE:	Monitoring Well Installation	DEPTH TO WATER:	IMMEDIATE: 6.0'
E NUMBER:	1 TOTAL DEPTH: 30.0'	DEPTH TO WATER:	DAYS AFTER COMPL: ---

LITHOLOGY EV.	LITHOLOGY DEPTH	DESCRIPTION	OVERBURDEN	SAMP.NO.	DEPTH	REC.FT.	BLOWS	TYPE	REMARKS
	5.0	Fill: intermixed clay, sandy clay, and construction debris (Excavated with backhoe)							
	21.0	Silty clay, brown, moist, medium stiff; with some sand and gravel		1	10.0-11.5	1.5	3/3/5	SPT	
				2	15.0-16.5	1.0	5/7/14	SPT	
				3	20.0-21.5	1.0	8/16/29	SPT	
	30.0	Sand, brown, fine to medium grained, medium dense		4	28.5-30.0	0.0	50+	SPT	
		Bottom of Hole - 30.0'							

WELL CONSTRUCTION DATA SHEET

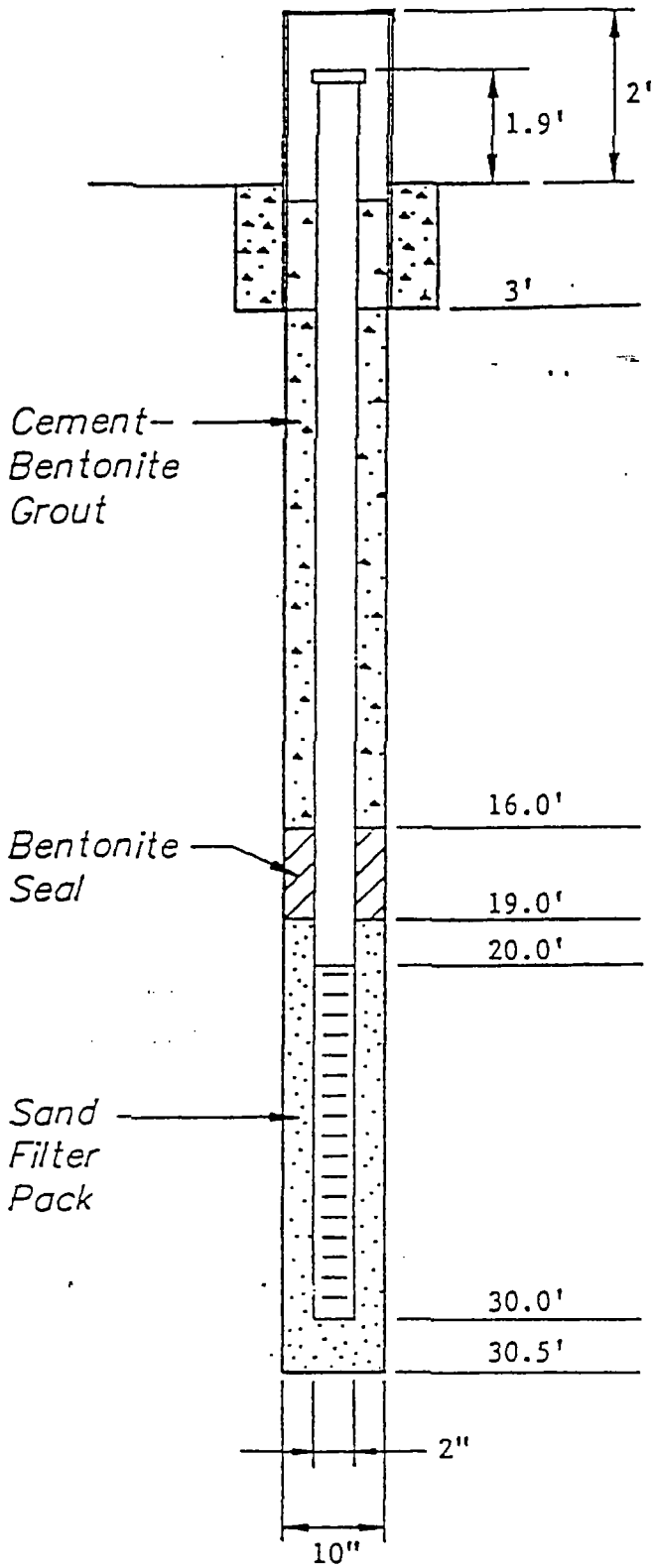

DRILLING STARTED	10/11/90
DRILLING COMPLETED	10/11/90
PVC INSTALLED	31.9'
GROUTING STARTED	10/15/90
GROUTING COMPLETED	10/15/90
WELL INSTALLATION	3.5 hrs.
WELL DEVELOPMENT	5.0 hrs.

QUANTITIES:

CEMENT	7 bags
SAND	4½ bags
BENTONITE	1 bucket

STATIC WATER LEVEL 9.0' (1430 hrs.; 10/15/90)

NOTES:

1. Concrete encasement from groundline to 6-foot depth.
2. Distances above ground are approximate.

FULLER, MOSSBARGER, SCOTT & MAY CIVIL ENGINEERS, INC.

PROJECT TITLE: Refined Metals Corporation

WELL NO.: 1

PROJECT NO.: 90226

NOT TO SCALE

RECORD OF WATER WELL

State Form 35680 (R3 / 11-87)

Mail complete record within 30 days to:
INDIANA DEPARTMENT OF NATURAL RESOURCES
Division of Water
2475 Directors Row
Indianapolis, Indiana 46241
Telephone number (317) 232-4160

F[illegible]ompletely)

WELL LOCATION

County where drilled	Civil township	Township	Range	Section
Marion				

Driving directions to the well location (include county road names, number, subdivisions lot number with consideration to intersecting, road and trip origination there is space for a map on reverse side.

Refined Metals is located at 3700 South Arlington Ave., in Beech Grove, Indiana. The entrance to the plant is on the west side of South Arlington Ave., approximately 500 feet north of intersection of Churchman Ave. and South Arlington Ave. For the specific location of Well No. 2, see attached site plan.

OWNER - CONTRACTOR

Name of well owner: Refined Metals Corporation	Telephone Number: (317) 787-6364
Address (Street and number, city, state): 3700 South Arlington Ave., Beech Grove, Indiana	ZIP code: 46218
Name of building contractor: Not Applicable	Telephone number: Not Applicable
Address (Street and number, city, state): Not Applicable	ZIP code: Not Applicable
Name of drilling contractor: Fuller, Mossbarger, Scott and May, Civil Engineers, Inc.	Telephone number: (606) 233-0574
Address (Street and number, city, state): 1409 North Forbes Road, Lexington, Kentucky	ZIP code: 40511

Name of equipment operator	License number	Date of completion
C[illegible]g Avery/David Mullins	802	10/11/90

CONSTRUCTION DETAILS

Use of well:
☐ Home ☐ Industry ☐ Test ☐ Irrigation
☐ Public supply ☐ Stock ☒ Other (specify): Monitoring Well No. 2

Method of drilling:
☐ Cable tool ☐ Rotary ☐ Jet ☐ Rev. rotary ☐ Bucket rig ☒ Other Auger

Casing length	Material	Diameter
20 feet	PVC	2 inches

Screen length	Material	Diameter
10 feet	PVC	2 inches

Screen slot size: 0.010 inches
Total depth of well: 30.0 feet

Depth of pump setting: Not applicable
Water quality (Clear, cloudy, odor, etc.): pH=7.5; Conductivity = 800 uS

Type of pump:
☐ Submersible ☐ Shallow-well jet ☐ Deep-well jet ☒ Other (specify): No Pump

WELL CAPACITY TEST

Check one: ☐ Bailing ☐ Pumping ☐ Air ☐ Not Applicable
Test rate: _____ gpm _____ hrs. Not Applicable
Drawdown: [illegible]t Applicable feet
Static level (depth to water): 7.0 feet

GROUTING INFORMATION

Grout material	Depth of grout	Sealing material	Depth filled
Cement/ Bentonite	From 3 To 16		From To

Method of installation	Number of bags used	Method of installation	Number of bags used
Tremie	5		

WELL ABANDONMENT

Formations: type of material	From (Feet)	To (Feet)
Silty clay, brown, moist, medium stiff; with some sand and gravel	0	20
Clayey sand and silt, brown, wet medium dense	20	28
Clay, gray, moist, stiff; with occasional gravel	28	30.0
Hole drilled and well completed to 30.0'		

(Additional space for well log on reverse side)

[illegible] penalties for perjury that [illegible] Signature of owner or authorized representative Date / /

FULLER, MOSSBARGER, SCOTT AND MAY
CIVIL ENGINEERS, INC.
LEXINGTON, LOUISVILLE, KENTUCKY

SUBSURFACE LOG

OUNTY:	Marion, Indiana	PROJECT NUMBER:	90226
ROJECT NAME:	Refined Metals Corporation	LOCATION:	Hole #2
URFACE ELEVATION:	N/A	DATE STARTED:	10/10/90 COMPLETED: 10/11/90
RILLER:	Craig Avery/David Mullins	LOGGED BY:	Don Armour
ROJECT TYPE:	Monitoring Well Installation	DEPTH TO WATER:	IMMEDIATE: 9.7' (0730 hrs.; 10/11/90)
OLE NUMBER:	2 TOTAL DEPTH: 30.0'	DEPTH TO WATER:	DAYS AFTER COMPL: 6.9' (1515 hrs.; 10/11/90)

LITHOLOGY ELEV.	LITHOLOGY DEPTH	DESCRIPTION	OVERBURDEN	SAMP.NO.	DEPTH	REC.FT.	BLOWS	TYPE	REMARKS
	0.0	Silty clay, brown, moist, medium stiff; with some sand and gravel							
				1	5.0-6.5	1.5	4/3/5	SPT	
				2	10.0-11.5	1.5	4/6/8	SPT	
				3	15.0-16.5	1.0	5/10/18	SPT	
	20.0			4	20.0-21.5	0.0	3/5/15	SPT	
		Clayey sand and silt, brown, wet, medium dense							
				5	25.0-26.5	1.0	8/12/20	SPT	
	28.0								
	30.0	Clay, gray, moist, stiff; with occasional gravel		6	28.5-30.0	1.5	10/22/31	SPT	
		Bottom of Hole - 30.0'							

WELL CONSTRUCTION DATA SHEET

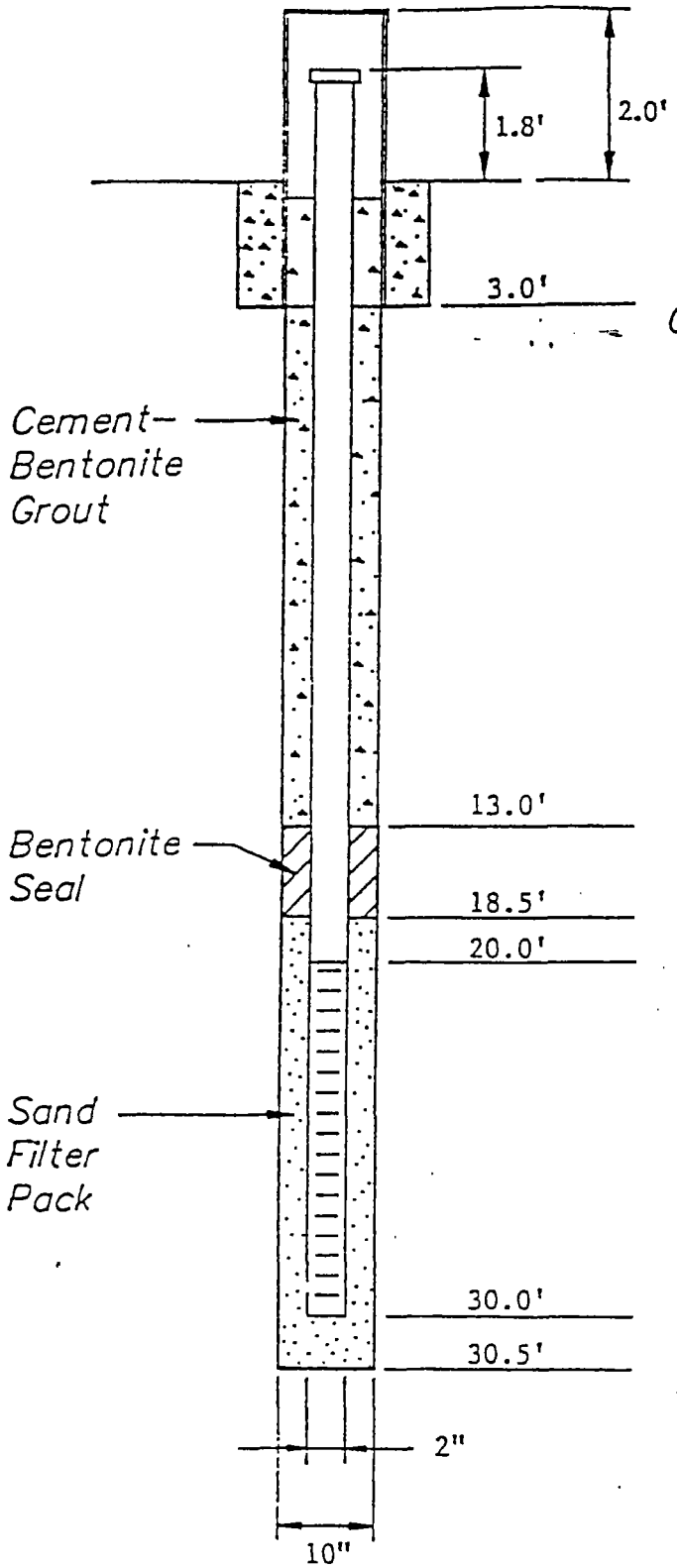

DRILLING STARTED	10/10/90
DRILLING COMPLETED	10/11/90
PVC INSTALLED	31.8'
GROUTING STARTED	10/15/90
GROUTING COMPLETED	10/15/90
WELL INSTALLATION	2.5 hrs.
WELL DEVELOPMENT	3.5 hrs.

QUANTITIES:

CEMENT	6 bags
SAND	5 bags
BENTONITE	1 bucket

STATIC WATER LEVEL 7.0' (1415 hrs.; 10/15/90)

NOTES:

1. Distances above ground are approximate.

FULLER, MOSSBARGER, SCOTT & MAY
FMSM
CIVIL ENGINEERS, INC.

PROJECT TITLE: Refined Metals Corporation

WELL NO.: 2

PROJECT NO.: 90226

NOT TO SCALE

RECORD OF WATER WELL

State Form 35680 (R3 / 11-87)

Mail complete record within 30 days to:
INDIANA DEPARTMENT OF NATURAL RESOURCES
Division of Water
2475 Directors Row
Indianapolis, Indiana 46241
Telephone number (317) 232-4160

il[redacted]ompletely)

WELL LOCATION

County where drilled	Civil township	Township	Range	Section
Marion				

Driving directions to the well location (include county road names, number, subdivisions lot number with consideration to intersecting, road and trip origination there s space for a map on reverse side.

Refined Metals is located at 3700 South Arlington Ave., in Beech Grove, Indiana. The entrance to the plant is on the west side of South Arlington Ave., approximately 500 feet north of intersection of Churchman Ave. and South Arlington Ave. For the specific location of Well No. 3, see attached site plan.

OWNER - CONTRACTOR

ame of well owner: Refined Metals Corporation	Telephone Number: (317) 787-6364
ddress (Street and number, city, state): 3700 South Arlington Ave., Beech Grove, Indiana	ZIP code: 46218
ame of building contractor: Not Applicable	Telephone number: Not Applicable
ddress (Street and number, city, state): Not Applicable	ZIP code: Not Applicable
ame of drilling contractor: Fuller, Mossbarger, Scott and May, Civil Engineers, Inc.	Telephone number: (606) 233-0574
ddress (Street and number, city, state): 1409 North Forbes Road, Lexington, Kentucky	ZIP code: 40511

a[redacted]equipment operator	License number	Date of completion
C[redacted]g Avery/David Mullins	802	10/17/90

CONSTRUCTION DETAILS

Use of well: ☐ Home ☐ Industry ☐ Test ☐ Irrigation ☐ Public supply ☐ Stock ☒ Other (specify): Monitoring Well No. 3

Method of drilling: ☐ Rotary ☐ Rev. rotary ☐ Cable tool ☐ Jet ☐ Bucket rig ☒ Other Auger

Casing length: 11.0 feet; Material: PVC; Diameter: 2 inches

Screen length: 10.0 feet; Material: PVC; Diameter: 2 inches

Screen slot size: 0.010 inches; Total depth of well: 21.0 feet

Depth of pump setting: Not applicable; Water quality (Clear, cloudy, odor, etc.): pH=7.85; Conductivity =

Type of pump: ☐ Submersible ☐ Shallow-well jet ☐ Deep-well jet ☒ Other (specify): No Pump

WELL CAPACITY TEST

Check one: ☐ Air ☐ Bailing ☐ Pumping — Not Applicable

Test rate: Not Applicable gpm ____ hrs.

Drawdown: [redacted]t Applicable feet; Static level (depth to water): Not Applicable feet

GROUTING INFORMATION

Grout material	Depth of grout	Sealing material	Depth filled
Cement/Bentonite	From 3 To 8		From To

Method of installation	Number of bags used	Method of installation	Number of bags used
Tremie	2		

WELL ABANDONMENT

Formations: type of material	From (Feet)	To (Feet)
Silty clay, brown, moist, medium stiff; with some sand and gravel	0	13
Clayey sand and silt, brown, wet medium dense	13	20
Clay, gray, moist, stiff; with occasional gravel	20	21.5
Hole drilled to 21.5' Well completed to 21.0'		

(Additional space for well log on reverse side)

[redacted] under the penalties for perjury that

Signature of owner or authorized representative

Date

FULLER, MOSSBARGER, SCOTT AND MAY
CIVIL ENGINEERS, INC.
LEXINGTON, LOUISVILLE, KENTUCKY

SUBSURFACE LOG

JNT.	Marion, Indiana	PROJECT NUMBER:	90226
JECT NAME:	Refined Metals Corporation	LOCATION:	Hole #3
RFACE ELEVATION:	N/A	DATE STARTED: 10/17/90	COMPLETED: 10/17/90
LLER:	Craig Avery/David Mullins	LOGGED BY:	Don Armour
JECT TYPE:	Monitoring Well Installation	DEPTH TO WATER: IMMEDIATE:	---
LE NUMBER:	3 TOTAL DEPTH: 21.5'	DEPTH TO WATER: DAYS AFTER COMPL:	---

LITHOLOGY LEV.	LITHOLOGY DEPTH	DESCRIPTION	OVERBURDEN	SAMP.NO.	DEPTH	REC.FT.	BLOWS	TYPE	REMARKS
		Silty clay, brown, moist, medium stiff; with some sand and gravel		1	5.0-6.5	1.5	7/13/15	SPT	
	13.0			2	10.0-11.5	1.0	4/8/14	SPT	
		Clayey sand and silt, brown, wet, medium dense		3	15.0-16.5	1.0	8/21/52	SPT	
	20.0			4	20.0-21.5	1.5	12/20/50	SPT	
	21.5	Clay, gray, moist, stiff; with occasional gravel							
		Bottom of Hole - 21.5'							

WELL CONSTRUCTION DATA SHEET

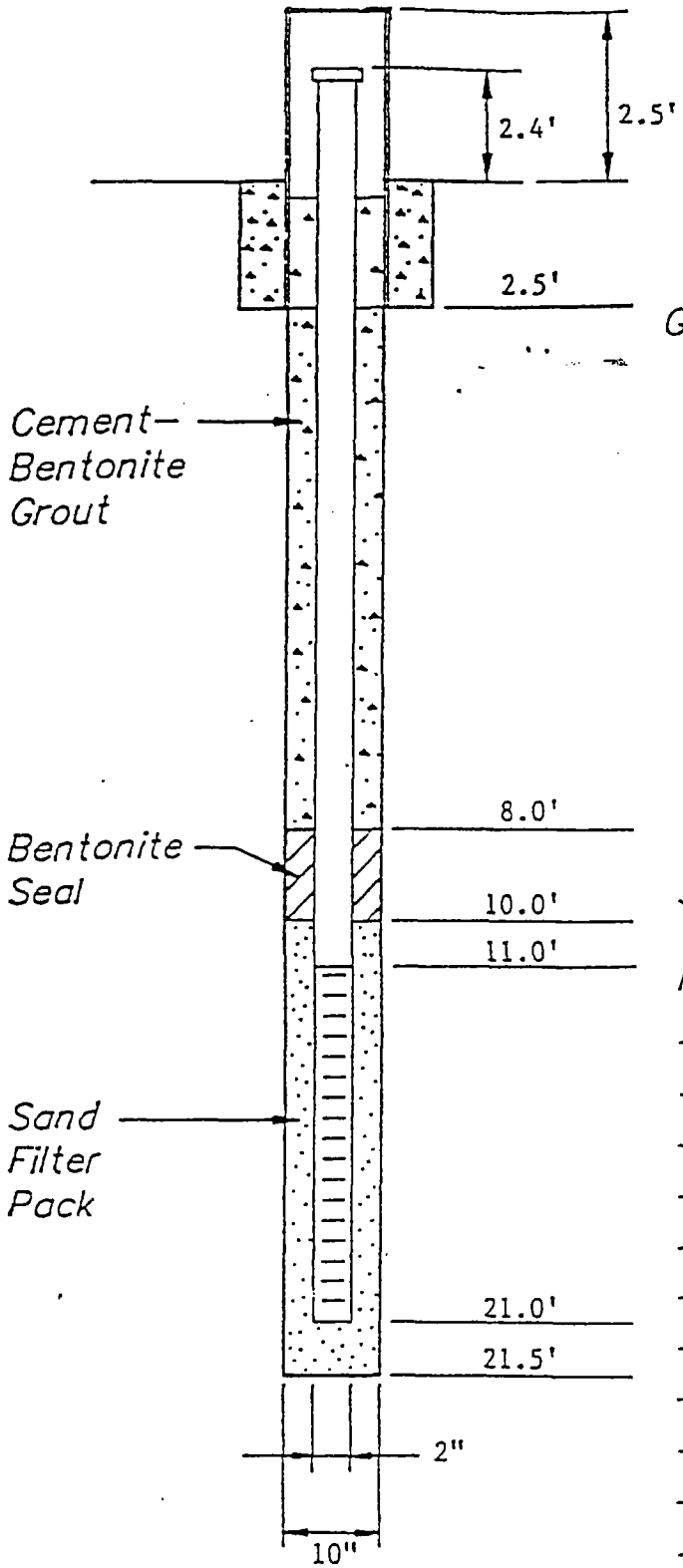

DRILLING STARTED	10/17/90
DRILLING COMPLETED	10/17/90
PVC INSTALLED	23.4'
GROUTING STARTED	10/18/90
GROUTING COMPLETED	10/18/90
WELL INSTALLATION	2.5 hrs.
WELL DEVELOPMENT	4.0 hrs.

QUANTITIES:

CEMENT	5 bags
SAND	5 bags
BENTONITE	1 bucket

STATIC WATER LEVEL _____

NOTES:

1. Distances above ground are approximate.

FULLER, MOSSBARGER, SCOTT & MAY
FMSM
CIVIL ENGINEERS, INC.

PROJECT TITLE: Refined Metals Corporation

WELL NO.: 3

PROJECT NO.: 90226

NOT TO SCALE

RECORD OF WATER WELL

State Form 35680 (R3 / 11-87)

Mail complete record within 30 days to:
INDIANA DEPARTMENT OF NATURAL RESOURCES
Division of Water
2475 Directors Row
Indianapolis, Indiana 46241
Telephone number (317) 232-4160

(Please complete)

WELL LOCATION

County where drilled	Civil township	Township	Range	Section
Marion				

Driving directions to the well location (include county road names, number, subdivisions lot number with consideration to intersecting, road and trip origination there is space for a map on reverse side.

Refined Metals is located at 3700 South Arlington Ave., in Beech Grove, Indiana. The entrance to the plant is on the west side of South Arlington Ave., approximately 500 feet north of intersection of Churchman Ave. and South Arlington Ave. For the specific location of Well No. 4, see attached site plan.

OWNER - CONTRACTOR

Name of well owner: Refined Metals Corporation	Telephone Number: (317) 787-6364
Address (Street and number, city, state): 3700 South Arlington Ave., Beech Grove, Indiana	ZIP code: 46218
Name of building contractor: Not Applicable	Telephone number: Not Applicable
Address (Street and number, city, state): Not Applicable	ZIP code: Not Applicable
Name of drilling contractor: Fuller, Mossbarger, Scott and May, Civil Engineers, Inc.	Telephone number: (606) 233-0574
Address (Street and number, city, state): 1409 North Forbes Road, Lexington, Kentucky	ZIP code: 40511

Name of equipment operator	License number	Date of completion
[redacted]ig Avery/David Mullins	802	10/15/90

CONSTRUCTION DETAILS

Use of well: ☐ Home ☐ Industry ☐ Test ☐ Irrigation ☐ Public supply ☐ Stock ☒ Other (specify): Monitoring Well No. 4

Method of drilling: ☐ Rotary ☐ Rev. rotary ☐ Cable tool ☐ Jet ☐ Bucket rig ☒ Other Auger

Casing length: 12 feet; Material: PVC; Diameter: 2 inches

Screen length: 10 feet; Material: PVC; Diameter: 2 inches

Screen slot size: 0.010 inches; Total depth of well: 22.0 feet

Depth of pump setting: Not applicable; Water quality (Clear, cloudy, odor, etc.): pH=7.90; Conductivity = 700 uS

Type of pump: ☐ Shallow-well jet ☐ Submersible ☐ Deep-well jet ☒ Other (specify): No Pump

WELL LOG

Formations: type of material	From (Feet)	To (Feet)
Silty clay, brown, moist, medium stiff; with some sand and gravel	0.0	15.0
Clayey sand and silt, brown, wet medium dense	15.0	22.0
Clay, gray, moist, stiff; with occasional gravel	22.0	26.0
Hole drilled to 26.0'		
Well completed to 22.0'		

WELL CAPACITY TEST

Check one: ☐ Air ☐ Bailing ☐ Pumping — Not Applicable

Test rate: Not Applicable gpm ____ hrs.

Drawdown: [redacted]ot Applicable feet; Static level (depth to water): Not Applicable feet

GROUTING INFORMATION

Grout material	Depth of grout	Sealing material	Depth filled
Cement/ Bentonite	From 3 To 5		From To

Method of installation	Number of bags used	Method of installation	Number of bags used
Tremie	1		

WELL ABANDONMENT

(Additional space for well log on reverse side)

I hereby swear or affirm, under the penalties for perjury that [illegible] herewith is to the best of my

Signature of owner or authorized representative: [illegible]

Date: 11/7/9[illegible]

FULLER, MOSSBARGER, SCOTT AND MAY
CIVIL ENGINEERS, INC.
LEXINGTON, LOUISVILLE, KENTUCKY

SUBSURFACE LOG

CATION:	Marion, Indiana	PROJECT NUMBER:	90226
OJECT NAME:	Refined Metals Corporation	LOCATION:	Hole #4
RFACE ELEVATION:	N/A	DATE STARTED:	10/15/90 COMPLETED: 10/15/90
ILLER:	Craig Avery/David Mullins	LOGGED BY:	Don Armour
OJECT TYPE:	Monitoring Well Installation	DEPTH TO WATER:	IMMEDIATE: —
LE NUMBER:	4 TOTAL DEPTH: 26.0'	DEPTH TO WATER:	DAYS AFTER COMPL: —

LITHOLOGY ELEV.	LITHOLOGY DEPTH	DESCRIPTION	OVERBURDEN	SAMP.NO.	DEPTH	REC.FT.	BLOWS	TYPE	REMARKS
		Silty clay, brown, moist, medium stiff; with some sand and gravel		1	5.0-6.5	1.5	2/1/2	SPT	
				2	10.0-11.5	1.0	5/9/11	SPT	
	15.0			3	15.0-16.5	1.0	12/17/13	SPT	
		Clayey sand and silt, brown, wet, medium dense							
	22.0			4	20.0-21.5	1.0	16/38/43	SPT	
		Clay, gray, moist, very stiff with occasional gravel							
	26.0			5	24.5-26.0	1.5	9/22/20	SPT	
		Bottom of Hole - 26.0'							

WELL CONSTRUCTION DATA SHEET

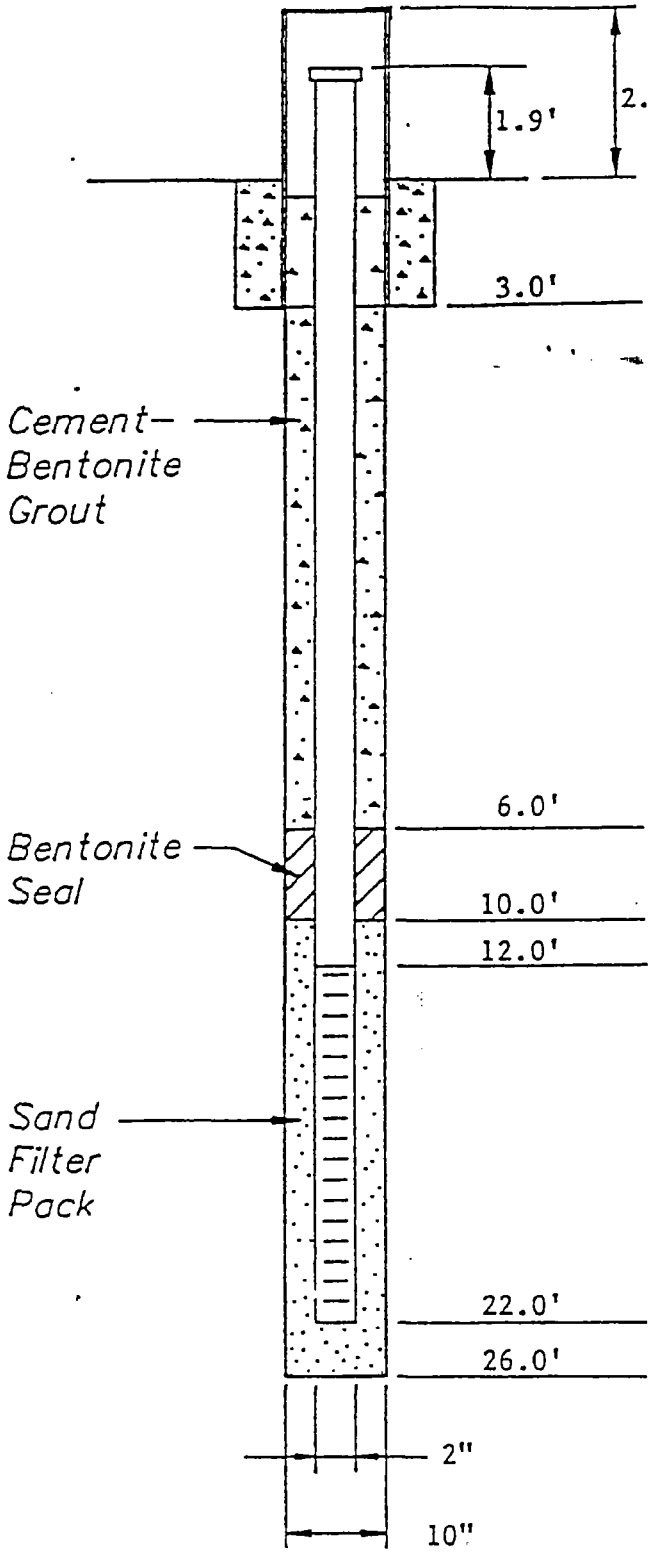

DRILLING STARTED	10/15/90
DRILLING COMPLETED	10/15/90
PVC INSTALLED	23.9'
GROUTING STARTED	10/17/90
GROUTING COMPLETED	10/17/90
WELL INSTALLATION	2.5 hrs.
WELL DEVELOPMENT	5.0 hrs.

QUANTITIES:

CEMENT	6 bags
SAND	5 bags
BENTONITE	1 bucket

STATIC WATER LEVEL _____

NOTES:

1. Distances above ground are approximate.

FULLER, MOSSBARGER, SCOTT & MAY
FMSM
CIVIL ENGINEERS, INC.

PROJECT TITLE: Refined Metals Corporation

WELL NO.: 4

PROJECT NO.: 90226

NOT TO SCALE

DATA.DWG

RECORD OF WATER WELL

State Form 35680 (R3 / 11-87)

Mail complete record within 30 days to:
INDIANA DEPARTMENT OF NATURAL RESOURCES
Division of Water
2475 Directors Row
Indianapolis, Indiana 46241
Telephone number (317) 232-4160

(Fill in completely)

WELL LOCATION

County where drilled	Civil township	Township	Range	Section
Marion				

Driving directions to the well location (include county road names, number, subdivisions lot number with consideration to intersecting, road and trip origination there is space for a map on reverse side.

Refined Metals is located at 3700 South Arlington Ave., in Beech Grove, Indiana. The entrance to the plant is on the west side of South Arlington Ave., approximately 500 feet north of intersection of Churchman Ave. and South Arlington Ave. For the specific location of Well No. 5, see attached site plan.

OWNER · CONTRACTOR

Name of well owner: Refined Metals Corporation	Telephone Number: (317) 787-6364
Address (Street and number, city, state): 3700 South Arlington Ave., Beech Grove, Indiana	ZIP code: 46218
Name of building contractor: Not Applicable	Telephone number: Not Applicable
Address (Street and number, city, state): Not Applicable	ZIP code: Not Applicable
Name of drilling contractor: Fuller, Mossbarger, Scott and May, Civil Engineers, Inc.	Telephone number: (606) 233-0574
Address (Street and number, city, state): 1409 North Forbes Road, Lexington, Kentucky	ZIP code: 40511

Name of equipment operator	License number	Date of completion
Craig Avery/David Mullins	802	10/12/90

CONSTRUCTION DETAILS

Use of well: ☐ Home ☐ Industry ☐ Test ☐ Irrigation ☐ Public supply ☐ Stock ☒ Other (specify): Monitoring Well No. 5

Method of drilling: ☐ Rotary ☐ Rev. rotary ☐ Cable tool ☐ Jet ☐ Bucket rig ☒ Other Auger

Casing length: 15.0 feet; Material: PVC; Diameter: 2 inches

Screen length: 10.0 feet; Material: PVC; Diameter: 2 inches

Screen slot size: 0.010 inches; Total depth of well: 25.0 feet

Depth of pump setting: Not applicable; Water quality (Clear, cloudy, odor, etc.): pH= 7.4; Conductivity = 760 uS

Type of pump: ☐ Shallow-well jet ☐ Submersible ☐ Deep-well jet ☒ Other (specify): No Pump

WELL CAPACITY TEST

Check one: ☐ Air ☐ Bailing ☐ Pumping — Not Applicable

Test rate: Not Applicable gpm hrs.

Drawdown: Not Applicable feet; Static level (depth to water): 10' (0900 hrs.; 10/12/90) feet

GROUTING INFORMATION

Grout material	Depth of grout	Sealing material	Depth filled
Cement/ Bentonite	From 2 To 5		From To

Method of installation	Number of bags used	Method of installation	Number of bags used
Tremie	2		

WELL LOG

Formations: type of material	From (Feet)	To (Feet)
Topsoil	0	1.0
Silty clay, brown, moist, medium stiff; with some sand and gravel	1.0	15.0
Clayey sand and silt, brown, wet, medium dense	15.0	25.0
Bottom of hole and well completed to 25.0'		

(Additional space for well log on reverse side)

I hereby swear or affirm, under the penalties for perjury that the information submitted herewith is to the best of my

Signature of owner of authorized representative: [signature]

Date: 11/7/90

FULLER, MOSSBARGER, SCOTT AND MAY
CIVIL ENGINEERS, INC.
LEXINGTON, LOUISVILLE, KENTUCKY

SUBSURFACE LOG

JN	Marion, Indiana	PROJECT NUMBER:	90226
OJE. .AME:	Refined Metals Corporation	LOCATION:	Hole #5
RFACE ELEVATION:	N/A	DATE STARTED:	10/12/90 COMPLETED: 10/12/90
ILLER:	Craig Avery/David Mullins	LOGGED BY:	Don Armour
OJECT TYPE:	Monitoring Well Installation	DEPTH TO WATER: IMMEDIATE:	10' (0900 hrs.; 10/12/90)
LE NUMBER:	5 TOTAL DEPTH: 25.0'	DEPTH TO WATER: DAYS AFTER COMPL:	---

LITHOLOGY		DESCRIPTION	OVERBURDEN	SAMP.NO.	DEPTH	REC.FT.	BLOWS	TYPE	REMARKS
LEV.	DEPTH								
	1.0	Topsoil							
		Silty clay, brown, moist, medium stiff; with some sand and gravel		1	5.0-6.5	1.5	2/3/3	SPT	
				2	10.0-11.5	1.0	5/8/17	SPT	
	15.0								
		Clayey sand and silt, brown, wet, medium dense		3	15.0-16.5	1.0	14/20/14	SPT	
		Gravel 16.0-17.0							
	25.0								
		Bottom of Hole - 25.0'							

WELL CONSTRUCTION DATA SHEET

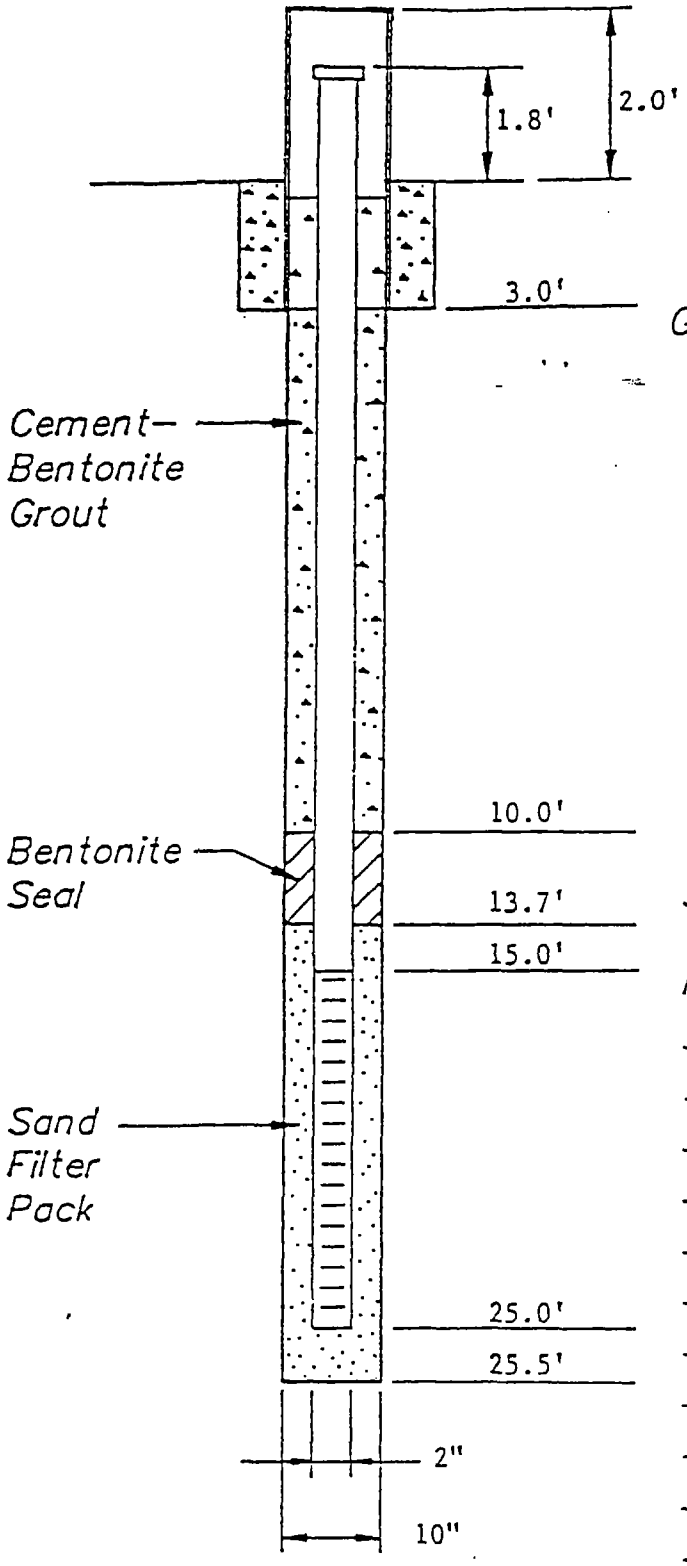

DRILLING STARTED	10/12/90
DRILLING COMPLETED	10/12/90
PVC INSTALLED	26.8'
GROUTING STARTED	10/16/90
GROUTING COMPLETED	10/16/90
WELL INSTALLATION	2.0 hrs.
WELL DEVELOPMENT	6.5 hrs.

QUANTITIES:

CEMENT	2 bags
SAND	5 bags
BENTONITE	1 bucket

STATIC WATER LEVEL 4.7' (1353 hrs.; 10/15/90)

NOTES:

FULLER, MOSSBARGER, SCOTT & MAY
FMSM
CIVIL ENGINEERS, INC.

PROJECT TITLE: Refined Metals Corporation

WELL NO.: 5

PROJECT NO.: 90226

NOT TO SCALE

1LDATA.DWG

ATTACHMENT 3
MONITORING WELL RESULTS

SAMPLE LO	DATE SAMP	LAB ID	DUPLICATE	PARAMETER	GROUP	T OR D	RESULT	QUAL	DL	UNITS
MW-1	6/12/91	127084		ANTIMONY	M	T		U	0.005	MG/L
MW-1	6/12/91	127084		ANTIMONY	M	D		U	0.005	MG/L
MW-1	6/12/91	127084		ARSENIC	M	T	0.008		0.002	MG/L
MW-1	6/12/91	127084		ARSENIC	M	D	0.003		0.002	MG/L
MW-1	6/12/91	127084		CADMIUM	M	T		U	0.0002	MG/L
MW-1	6/12/91	127084		CADMIUM	M	D		U	0.0002	MG/L
MW-1	6/12/91	127084		LEAD	M	T	0.014		0.001	MG/L
MW-1	6/12/91	127084		LEAD	M	D		U	0.001	MG/L
MW-1	6/12/91	127084		SULFATE	WC	T	91		1	MG/L
MW-1	9/11/91	133869		ANTIMONY	M	T		U	0.005	MG/L
MW-1	9/11/91	133869		ANTIMONY	M	D		U	0.005	MG/L
MW-1	9/11/91	133869		ARSENIC	M	T	0.009		0.002	MG/L
MW-1	9/11/91	133869		ARSENIC	M	D		U	0.002	MG/L
MW-1	9/11/91	133869		CADMIUM	M	T	0.0026		0.0002	MG/L
MW-1	9/11/91	133869		CADMIUM	M	D		U	0.0002	MG/L
MW-1	9/11/91	133869		CONDUCTIVITY	WC	T	900			UMHOS
MW-1	9/11/91	133869		LEAD	M	T	0.002		0.001	MG/L
MW-1	9/11/91	133869		LEAD	M	D		U	0.001	MG/L
MW-1	9/11/91	133869		PH (FIELD)	WC	T	7.4			STD. UNITS
MW-1	9/11/91	133869		SULFATE	WC	T	84		1	MG/L
MW-1	9/11/91	133869		TEMPERATURE	WC	T	15			DEG C
MW-1	9/11/91	133869		TURBIDITY	WC	T	15			NTU
MW-1	9/11/91	133872	FD	ANTIMONY	M	T		U	0.005	MG/L
MW-1	9/11/91	133872	FD	ANTIMONY	M	D		U	0.005	MG/L
MW-1	9/11/91	133872	FD	ARSENIC	M	T	0.01		0.002	MG/L
MW-1	9/11/91	133872	FD	ARSENIC	M	D		U	0.002	MG/L
MW-1	9/11/91	133872	FD	CADMIUM	M	T	0.0002		0.0002	MG/L
MW-1	9/11/91	133872	FD	CADMIUM	M	D		U	0.0002	MG/L
MW-1	9/11/91	133872	FD	CONDUCTIVITY	WC	T	900			UMHOS
MW-1	9/11/91	133872	FD	LEAD	M	T	0.003		0.001	MG/L
MW-1	9/11/91	133872	FD	LEAD	M	D		U	0.001	MG/L
MW-1	9/11/91	133872	FD	PH (FIELD)	WC	T	7.4			STD. UNITS
MW-1	9/11/91	133872	FD	SULFATE	WC	T	96		1	MG/L
MW-1	9/11/91	133872	FD	TEMPERATURE	WC	T	15			DEG C
MW-1	9/11/91	133872	FD	TURBIDITY	WC	T	15			NTU
MW-1	12/4/91	138206		ANTIMONY	M	T		U	0.005	MG/L
MW-1	12/4/91	138206		ANTIMONY	M	D		U	0.005	MG/L
MW-1	12/4/91	138206		ARSENIC	M	T	0.003		0.002	MG/L
MW-1	12/4/91	138206		ARSENIC	M	D	0.003		0.002	MG/L
MW-1	12/4/91	138206		CADMIUM	M	T		U	0.0002	MG/L
MW-1	12/4/91	138206		CADMIUM	M	D		U	0.0002	MG/L
MW-1	12/4/91	138206		LEAD	M	T	0.002		0.001	MG/L
MW-1	12/4/91	138206		LEAD	M	D	0.002		0.001	MG/L
MW-1	12/4/91	138206		SULFATE	WC	T	93		1	MG/L
MW-1	3/27/92	143827		ANTIMONY	M	T		U	0.005	MG/L
MW-1	3/27/92	143827		ANTIMONY	M	D		U	0.005	MG/L
MW-1	3/27/92	143827		ARSENIC	M	T	0.011		0.005	MG/L
MW-1	3/27/92	143827		ARSENIC	M	D	0.005		0.005	MG/L
MW-1	3/27/92	143827		CADMIUM	M	T		U	0.0002	MG/L
MW-1	3/27/92	143827		CADMIUM	M	D		U	0.0002	MG/L
MW-1	3/27/92	143827		CONDUCTIVITY	WC	T	1040			UMHOS
MW-1	3/27/92	143827		LEAD	M	T	0.006		0.002	MG/L
MW-1	3/27/92	143827		LEAD	M	D		U	0.002	MG/L
MW-1	3/27/92	143827		PH (FIELD)	WC	T	7			STD. UNITS
MW-1	3/27/92	143827		SULFATE	WC	T	79		1	MG/L
MW-1	3/27/92	143827		TEMPERATURE	WC	T	12			DEG C

SAMPLE LO	DATE SAMP	LAB ID	DUPLICATE	PARAMETER	GROUP	T OR D	RESULT	QUAL	DL	UNITS
MW-1	6/13/92	147726		ANTIMONY	M	T		U	0.005	MG/L
MW-1	6/13/92	147726		ANTIMONY	M	D		U	0.005	MG/L
MW-1	6/13/92	147726		ARSENIC	M	T	0.008		0.002	MG/L
MW-1	6/13/92	147726		ARSENIC	M	D	0.003		0.002	MG/L
MW-1	6/13/92	147726		CADMIUM	M	T		U	0.0002	MG/L
MW-1	6/13/92	147726		CADMIUM	M	D		U	0.0002	MG/L
MW-1	6/13/92	147726		LEAD	M	T		U	0.002	MG/L
MW-1	6/13/92	147726		LEAD	M	D		U	0.002	MG/L
MW-1	6/13/92	147726		SULFATE	WC	T	97		1	MG/L
MW-1	9/30/92	154193		ANTIMONY	M	T		U	0.005	MG/L
MW-1	9/30/92	154193		ANTIMONY	M	D		U	0.005	MG/L
MW-1	9/30/92	154193		ARSENIC	M	T	0.012		0.002	MG/L
MW-1	9/30/92	154193		ARSENIC	M	D	0.01		0.002	MG/L
MW-1	9/30/92	154193		CADMIUM	M	T		U	0.0002	MG/L
MW-1	9/30/92	154193		CADMIUM	M	D		U	0.0002	MG/L
MW-1	9/30/92	154193		CONDUCTIVITY	WC	T	785			UMHOS
MW-1	9/30/92	154193		LEAD	M	T	0.005		0.002	MG/L
MW-1	9/30/92	154193		LEAD	M	D		U	0.002	MG/L
MW-1	9/30/92	154193		PH (FIELD)	WC	T	7			STD. UNITS
MW-1	9/30/92	154193		SULFATE	WC	T	80		1	MG/L
MW-1	9/30/92	154193		TEMPERATURE	WC	T	17			DEG C
MW-1	9/30/92	154193		TURBIDITY	WC	T	15			NTU
MW-1	12/17/92	158563		ANTIMONY	M	T		U	0.005	MG/L
MW-1	12/17/92	158563		ANTIMONY	M	D		U	0.005	MG/L
MW-1	12/17/92	158563		ARSENIC	M	T	0.009		0.002	MG/L
MW-1	12/17/92	158563		ARSENIC	M	D		U	0.002	MG/L
MW-1	12/17/92	158563		CADMIUM	M	T		U	0.0002	MG/L
MW-1	12/17/92	158563		CADMIUM	M	D		U	0.0002	MG/L
MW-1	12/17/92	158563		CONDUCTIVITY	WC	T	900			UMHOS
MW-1	12/17/92	158563		LEAD	M	T		U	0.002	MG/L
MW-1	12/17/92	158563		LEAD	M	D		U	0.002	MG/L
MW-1	12/17/92	158563		PH (FIELD)	WC	T	7.3			STD. UNITS
MW-1	12/17/92	158563		SULFATE	WC	T	31		1	MG/L
MW-1	12/17/92	158563		TEMPERATURE	WC	T	15			DEG C
MW-1	12/17/92	158563		TURBIDITY	WC	T	12.5			NTU
MW-1	3/29/93	A275264		ANTIMONY	M	T		U	0.005	MG/L
MW-1	3/29/93	A275264		ARSENIC	M	T	0.005		0.005	MG/L
MW-1	3/29/93	A275264		CADMIUM	M	T		U	0.001	MG/L
MW-1	3/29/93	A275264		LEAD	M	T		U	0.005	MG/L
MW-1	3/29/93	A275264		SULFATE	WC	T	95		50	MG/L
MW-1	5/25/93	A279773		ANTIMONY	M	T		U	0.005	MG/L
MW-1	5/25/93	A279773		ARSENIC	M	T		U	0.005	MG/L
MW-1	5/25/93	A279773		CADMIUM	M	T		U	0.001	MG/L
MW-1	5/25/93	A279773		LEAD	M	T		U	0.002	MG/L
MW-1	5/25/93	A279773		SULFATE	WC	T	110		50	MG/L
MW-1	9/21/93	A290571		ANTIMONY	M	D		U	0.005	MG/L
MW-1	9/21/93	A290571		ARSENIC	M	D	0.007		0.005	MG/L
MW-1	9/21/93	A290571		CADMIUM	M	D		U	0.001	MG/L
MW-1	9/21/93	A290571		LEAD	M	D		U	0.005	MG/L
MW-1	9/21/93	A290571		SULFATE	WC	T	98		25	MG/L
MW-1	10/27/94	A326580		ANTIMONY	M	D		U	0.005	MG/L
MW-1	10/27/94	A326580		ARSENIC	M	D		U	0.005	MG/L
MW-1	10/27/94	A326580		CADMIUM	M	D		U	0.001	MG/L
MW-1	10/27/94	A326580		LEAD	M	D		U	0.005	MG/L
MW-1	10/27/94	A326580		SULFATE	WC	T	100		25	MG/L
MW-1	2/28/95	A335759		ANTIMONY	M	D		U	0.005	MG/L

SAMPLE LO	DATE SAMP	LAB ID	DUPLICATE	PARAMETER	GROUP	T OR D	RESULT	QUAL	DL	UNITS
MW-1	2/28/95	A335759		ARSENIC	M	D		U	0.005	MG/L
MW-1	2/28/95	A335759		CADMIUM	M	D		U	0.001	MG/L
MW-1	2/28/95	A335759		LEAD	M	D		U	0.002	MG/L
MW-1	2/28/95	A335759		SULFATE	WC	T	99		25	MG/L
MW-1	6/23/95	A345972		ANTIMONY	M	D		U	0.005	MG/L
MW-1	6/23/95	A345972		ARSENIC	M	D	0.0024		0.002	MG/L
MW-1	6/23/95	A345972		CADMIUM	M	D	0.00035		0.0002	MG/L
MW-1	6/23/95	A345972		LEAD	M	D	0.0065		0.002	MG/L
MW-1	6/23/95	A345972		SULFATE	WC	T	90		25	MG/L
MW-1	11/27/95	A360995		ANTIMONY	M	D		U	0.005	MG/L
MW-1	11/27/95	A360995		ARSENIC	M	D	0.0043		0.002	MG/L
MW-1	11/27/95	A360995		CADMIUM	M	D		U	0.0002	MG/L
MW-1	11/27/95	A360995		LEAD	M	D		U	0.002	MG/L
MW-1	11/27/95	A360995		SULFATE	WC	T	80		50	MG/L
MW-1	3/18/96	A369088		ANTIMONY	M	D		U	0.005	MG/L
MW-1	3/18/96	A369088		ARSENIC	M	D	0.0065		0.002	MG/L
MW-1	3/18/96	A369088		CADMIUM	M	D		U	0.0002	MG/L
MW-1	3/18/96	A369088		LEAD	M	D		U	0.002	MG/L
MW-1	3/18/96	A369088		SULFATE	WC	T	66		50	MG/L
MW-1	6/17/96	A377989		ANTIMONY	M	D		U	0.005	MG/L
MW-1	6/17/96	A377989		ARSENIC	M	D	0.012		0.005	MG/L
MW-1	6/17/96	A377989		CADMIUM	M	D		U	0.001	MG/L
MW-1	6/17/96	A377989		LEAD	M	D		U	0.005	MG/L
MW-1	6/17/96	A377989		SULFATE	WC	T	92		50	MG/L
MW-1	9/17/96	A387196		ANTIMONY	M	D		U	0.005	MG/L
MW-1	9/17/96	A387196		ARSENIC	M	D	0.0092		0.005	MG/L
MW-1	9/17/96	A387196		CADMIUM	M	D	0.00095		0.0002	MG/L
MW-1	9/17/96	A387196		LEAD	M	D	0.028		0.004	MG/L
MW-1	9/17/96	A387196		SULFATE	WC	T	87		50	MG/L
MW-1	12/27/96	A397279		ANTIMONY	M	T		U	0.005	MG/L
MW-1	12/27/96	A397279		ARSENIC	M	T	0.012		0.002	MG/L
MW-1	12/27/96	A397279		CADMIUM	M	T		U	0.001	MG/L
MW-1	12/27/96	A397279		LEAD	M	T	0.0054		0.002	MG/L
MW-1	12/27/96	A397279		SULFATE	WC	T	99		50	MG/L
MW-1	3/21/97	A403572		ANTIMONY	M	D		U	0.005	MG/L
MW-1	3/21/97	A403572		ARSENIC	M	D	0.011		0.002	MG/L
MW-1	3/21/97	A403572		CADMIUM	M	D		U	0.0002	MG/L
MW-1	3/21/97	A403572		LEAD	M	D		U	0.002	MG/L
MW-1	3/21/97	A403572		SULFATE	WC	T	17		50	MG/L
MW-2	6/12/91	127087		ANTIMONY	M	T		U	0.005	MG/L
MW-2	6/12/91	127087		ANTIMONY	M	D		U	0.005	MG/L
MW-2	6/12/91	127087		ARSENIC	M	T	0.003		0.002	MG/L
MW-2	6/12/91	127087		ARSENIC	M	D	0.003		0.002	MG/L
MW-2	6/12/91	127087		CADMIUM	M	T	0.0002		0.0002	MG/L
MW-2	6/12/91	127087		CADMIUM	M	D	0.0002		0.0002	MG/L
MW-2	6/12/91	127087		LEAD	M	T	0.021		0.001	MG/L
MW-2	6/12/91	127087		LEAD	M	D	0.001		0.001	MG/L
MW-2	6/12/91	127087		SULFATE	WC	T	113		1	MG/L
MW-2	9/11/91	133875		ANTIMONY	M	T		U	0.005	MG/L
MW-2	9/11/91	133875		ANTIMONY	M	D		U	0.005	MG/L
MW-2	9/11/91	133875		ARSENIC	M	T		U	0.002	MG/L
MW-2	9/11/91	133875		ARSENIC	M	D		U	0.002	MG/L
MW-2	9/11/91	133875		CADMIUM	M	T	0.0003		0.0002	MG/L
MW-2	9/11/91	133875		CADMIUM	M	D	0.0003		0.0002	MG/L
MW-2	9/11/91	133875		CONDUCTIVITY	WC	T	1130			UMHOS
MW-2	9/11/91	133875		LEAD	M	T	0.002		0.001	MG/L

SAMPLE LO	DATE SAMP	LAB ID	DUPLICATE	PARAMETER	GROUP	T OR D	RESULT	QUAL	DL	UNITS
MW-2	9/11/91	133875		LEAD	M	D		U	0.001	MG/L
MW-2	9/11/91	133875		PH (FIELD)	WC	T	7.4			STD. UNITS
MW-2	9/11/91	133875		SULFATE	WC	T	97		1	MG/L
MW-2	9/11/91	133875		TEMPERATURE	WC	T	15			DEG C
MW-2	9/11/91	133875		TURBIDITY	WC	T	10			NTU
MW-2	12/4/91	138209		ANTIMONY	M	T		U	0.005	MG/L
MW-2	12/4/91	138209		ANTIMONY	M	D		U	0.005	MG/L
MW-2	12/4/91	138209		ARSENIC	M	T		U	0.002	MG/L
MW-2	12/4/91	138209		ARSENIC	M	D		U	0.002	MG/L
MW-2	12/4/91	138209		CADMIUM	M	T	0.0003		0.0002	MG/L
MW-2	12/4/91	138209		CADMIUM	M	D		U	0.0002	MG/L
MW-2	12/4/91	138209		LEAD	M	T	0.004		0.001	MG/L
MW-2	12/4/91	138209		LEAD	M	D		U	0.001	MG/L
MW-2	12/4/91	138209		SULFATE	WC	T	113		1	MG/L
MW-2	3/27/92	143830		ANTIMONY	M	T		U	0.005	MG/L
MW-2	3/27/92	143830		ANTIMONY	M	D		U	0.005	MG/L
MW-2	3/27/92	143830		ARSENIC	M	T	0.003		0.002	MG/L
MW-2	3/27/92	143830		ARSENIC	M	D		U	0.002	MG/L
MW-2	3/27/92	143830		CADMIUM	M	T		U	0.0002	MG/L
MW-2	3/27/92	143830		CADMIUM	M	D		U	0.0002	MG/L
MW-2	3/27/92	143830		CONDUCTIVITY	WC	T	1100			UMHOS
MW-2	3/27/92	143830		LEAD	M	T	0.002		0.002	MG/L
MW-2	3/27/92	143830		LEAD	M	D		U	0.002	MG/L
MW-2	3/27/92	143830		PH (FIELD)	WC	T	7.1			STD. UNITS
MW-2	3/27/92	143830		SULFATE	WC	T	99		1	MG/L
MW-2	3/27/92	143830		TEMPERATURE	WC	T	12			DEG C
MW-2	6/13/92	147729		ANTIMONY	M	T		U	0.005	MG/L
MW-2	6/13/92	147729		ANTIMONY	M	D		U	0.005	MG/L
MW-2	6/13/92	147729		ARSENIC	M	T	0.006		0.002	MG/L
MW-2	6/13/92	147729		ARSENIC	M	D		U	0.002	MG/L
MW-2	6/13/92	147729		CADMIUM	M	T		U	0.0002	MG/L
MW-2	6/13/92	147729		CADMIUM	M	D		U	0.0002	MG/L
MW-2	6/13/92	147729		LEAD	M	T	0.011		0.002	MG/L
MW-2	6/13/92	147729		LEAD	M	D		U	0.002	MG/L
MW-2	6/13/92	147729		SULFATE	WC	T	99		1	MG/L
MW-2	9/30/92	154196		ANTIMONY	M	T		U	0.005	MG/L
MW-2	9/30/92	154196		ANTIMONY	M	D		U	0.005	MG/L
MW-2	9/30/92	154196		ARSENIC	M	T	0.01		0.002	MG/L
MW-2	9/30/92	154196		ARSENIC	M	D		U	0.002	MG/L
MW-2	9/30/92	154196		CADMIUM	M	T	0.0003		0.0002	MG/L
MW-2	9/30/92	154196		CADMIUM	M	D		U	0.0002	MG/L
MW-2	9/30/92	154196		CONDUCTIVITY	WC	T	930			UMHOS
MW-2	9/30/92	154196		LEAD	M	T	0.022		0.002	MG/L
MW-2	9/30/92	154196		LEAD	M	D	0.002		0.002	MG/L
MW-2	9/30/92	154196		PH (FIELD)	WC	T	6.5			STD. UNITS
MW-2	9/30/92	154196		SULFATE	WC	T	102		1	MG/L
MW-2	9/30/92	154196		TEMPERATURE	WC	T	17			DEG C
MW-2	9/30/92	154196		TURBIDITY	WC	T	23			NTU
MW-2	9/30/92	154199	FD	ANTIMONY	M	T		U	0.005	MG/L
MW-2	9/30/92	154199	FD	ANTIMONY	M	D		U	0.005	MG/L
MW-2	9/30/92	154199	FD	ARSENIC	M	T	0.009		0.002	MG/L
MW-2	9/30/92	154199	FD	ARSENIC	M	D		U	0.002	MG/L
MW-2	9/30/92	154199	FD	CADMIUM	M	T	0.0002		0.0002	MG/L
MW-2	9/30/92	154199	FD	CADMIUM	M	D		U	0.0002	MG/L
MW-2	9/30/92	154199	FD	LEAD	M	T	0.02		0.002	MG/L
MW-2	9/30/92	154199	FD	LEAD	M	D	0.003		0.002	MG/L

Dup

SAMPLE LO	DATE SAMP	LAB ID	DUPLICATE	PARAMETER	GROUP	T OR D	RESULT	QUAL	DL	UNITS
MW-2	9/30/92	154199	FD	SULFATE	WC	T	123		1	MG/L
MW-2	12/17/92	158566		ANTIMONY	M	T		U	0.005	MG/L
MW-2	12/17/92	158566		ANTIMONY	M	D		U	0.005	MG/L
MW-2	12/17/92	158566		ARSENIC	M	T	0.004		0.002	MG/L
MW-2	12/17/92	158566		ARSENIC	M	D		U	0.002	MG/L
MW-2	12/17/92	158566		CADMIUM	M	T	0.0002		0.0002	MG/L
MW-2	12/17/92	158566		CADMIUM	M	D		U	0.0002	MG/L
MW-2	12/17/92	158566		CONDUCTIVITY	WC	T	1090			UMHOS
MW-2	12/17/92	158566		LEAD	M	T	0.007		0.002	MG/L
MW-2	12/17/92	158566		LEAD	M	D	0.003		0.002	MG/L
MW-2	12/17/92	158566		PH (FIELD)	WC	T	7			STD. UNITS
MW-2	12/17/92	158566		SULFATE	WC	T	101		1	MG/L
MW-2	12/17/92	158566		TEMPERATURE	WC	T	14.4			DEG C
MW-2	12/17/92	158566		TURBIDITY	WC	T	7.5			NTU
MW-2	3/29/93	A275263		ANTIMONY	M	T		U	0.005	MG/L
MW-2	3/29/93	A275263		ARSENIC	M	T		U	0.005	MG/L
MW-2	3/29/93	A275263		CADMIUM	M	T		U	0.001	MG/L
MW-2	3/29/93	A275263		LEAD	M	T		U	0.005	MG/L
MW-2	3/29/93	A275263		SULFATE	WC	T	120		25	MG/L
MW-2	5/25/93	A279772		ANTIMONY	M	T		U	0.005	MG/L
MW-2	5/25/93	A279772		ARSENIC	M	T		U	0.005	MG/L
MW-2	5/25/93	A279772		CADMIUM	M	T		U	0.001	MG/L
MW-2	5/25/93	A279772		LEAD	M	T		U	0.002	MG/L
MW-2	5/25/93	A279772		SULFATE	WC	T	140		50	MG/L
MW-2	9/21/93	A290570		ANTIMONY	M	D		U	0.005	MG/L
MW-2	9/21/93	A290570		ARSENIC	M	D	0.0061		0.005	MG/L
MW-2	9/21/93	A290570		CADMIUM	M	D		U	0.001	MG/L
MW-2	9/21/93	A290570		LEAD	M	D		U	0.005	MG/L
MW-2	9/21/93	A290570		SULFATE	WC	T	140		50	MG/L
MW-2	10/27/94	A326579		ANTIMONY	M	D		U	0.005	MG/L
MW-2	10/27/94	A326579		ARSENIC	M	D		U	0.005	MG/L
MW-2	10/27/94	A326579		CADMIUM	M	D		U	0.001	MG/L
MW-2	10/27/94	A326579		LEAD	M	D		U	0.005	MG/L
MW-2	10/27/94	A326579		SULFATE	WC	T	190		25	MG/L
MW-2	2/28/95	A335758		ANTIMONY	M	D		U	0.005	MG/L
MW-2	2/28/95	A335758		ARSENIC	M	D	0.0057		0.005	MG/L
MW-2	2/28/95	A335758		CADMIUM	M	D		U	0.001	MG/L
MW-2	2/28/95	A335758		LEAD	M	D	0.0036		0.005	MG/L
MW-2	2/28/95	A335758		SULFATE	WC	T	240		50	MG/L
MW-2	6/23/95	A345971		ANTIMONY	M	D		U	0.005	MG/L
MW-2	6/23/95	A345971		ARSENIC	M	D	0.0044		0.004	MG/L
MW-2	6/23/95	A345971		CADMIUM	M	D	0.00041		0.0002	MG/L
MW-2	6/23/95	A345971		LEAD	M	D	0.0067		0.002	MG/L
MW-2	6/23/95	A345971		SULFATE	WC	T	160		25	MG/L
MW-2	11/27/95	A360994		ANTIMONY	M	D		U	0.005	MG/L
MW-2	11/27/95	A360994		ARSENIC	M	D	0.0052		0.002	MG/L
MW-2	11/27/95	A360994		CADMIUM	M	D		U	0.0002	MG/L
MW-2	11/27/95	A360994		LEAD	M	D	0.004		0.002	MG/L
MW-2	11/27/95	A360994		SULFATE	WC	T	200		50	MG/L
MW-2	3/18/96	A369086		ANTIMONY	M	D		U	0.005	MG/L
MW-2	3/18/96	A369086		ARSENIC	M	D	0.0056		0.002	MG/L
MW-2	3/18/96	A369086		CADMIUM	M	D		U	0.0002	MG/L
MW-2	3/18/96	A369086		LEAD	M	D	0.0036		0.002	MG/L
MW-2	3/18/96	A369086		SULFATE	WC	T	180		50	MG/L
MW-2	3/18/96	A369087	FD	ANTIMONY	M	D		U	0.005	MG/L
MW-2	3/18/96	A369087	FD	ARSENIC	M	D	0.0066		0.002	MG/L

SAMPLE LO	DATE SAMP	LAB ID	DUPLICATE	PARAMETER	GROUP	T OR D	RESULT	QUAL	DL	UNITS
MW-2	3/18/96	A369087	FD	CADMIUM	M	D		U	0.0002	MG/L
MW-2	3/18/96	A369087	FD	LEAD	M	D	0.0029		0.002	MG/L
MW-2	3/18/96	A369087	FD	SULFATE	WC	T	180		50	MG/L
MW-2	6/17/96	A377987		ANTIMONY	M	D		U	0.005	MG/L
MW-2	6/17/96	A377987		ARSENIC	M	D		U	0.005	MG/L
MW-2	6/17/96	A377987		CADMIUM	M	D		U	0.001	MG/L
MW-2	6/17/96	A377987		LEAD	M	D		U	0.005	MG/L
MW-2	6/17/96	A377987		SULFATE	WC	T	200		50	MG/L
MW-2	6/17/96	A377988	FD	ANTIMONY	M	D		U	0.005	MG/L
MW-2	6/17/96	A377988	FD	ARSENIC	M	D		U	0.005	MG/L
MW-2	6/17/96	A377988	FD	CADMIUM	M	D		U	0.001	MG/L
MW-2	6/17/96	A377988	FD	LEAD	M	D		U	0.005	MG/L
MW-2	6/17/96	A377988	FD	SULFATE	WC	T	270		50	MG/L
MW-2	9/17/96	A387194		ANTIMONY	M	D		U	0.005	MG/L
MW-2	9/17/96	A387194		ARSENIC	M	D	0.0072		0.005	MG/L
MW-2	9/17/96	A387194		CADMIUM	M	D	0.00028		0.0002	MG/L
MW-2	9/17/96	A387194		LEAD	M	D	0.042		0.008	MG/L
MW-2	9/17/96	A387194		SULFATE	WC	T	260		50	MG/L
MW-2	12/27/96	A397278		ANTIMONY	M	T		U	0.005	MG/L
MW-2	12/27/96	A397278		ARSENIC	M	T	0.0055		0.002	MG/L
MW-2	12/27/96	A397278		CADMIUM	M	T		U	0.001	MG/L
MW-2	12/27/96	A397278		LEAD	M	T	0.013		0.002	MG/L
MW-2	12/27/96	A397278		SULFATE	WC	T	300		50	MG/L
MW-2	3/21/97	A403571		ANTIMONY	M	D		U	0.005	MG/L
MW-2	3/21/97	A403571		ARSENIC	M	D	0.0047		0.002	MG/L
MW-2	3/21/97	A403571		CADMIUM	M	D		U	0.0002	MG/L
MW-2	3/21/97	A403571		LEAD	M	D	0.003		0.002	MG/L
MW-2	3/21/97	A403571		SULFATE	WC	T	240		50	MG/L
MW-3	6/12/91	127090		ANTIMONY	M	T		U	0.005	MG/L
MW-3	6/12/91	127090		ANTIMONY	M	D		U	0.005	MG/L
MW-3	6/12/91	127090		ARSENIC	M	T	0.012		0.002	MG/L
MW-3	6/12/91	127090		ARSENIC	M	D		U	0.002	MG/L
MW-3	6/12/91	127090		CADMIUM	M	T	0.0002		0.0002	MG/L
MW-3	6/12/91	127090		CADMIUM	M	D		U	0.0002	MG/L
MW-3	6/12/91	127090		LEAD	M	T	0.008		0.001	MG/L
MW-3	6/12/91	127090		LEAD	M	D	0.002		0.001	MG/L
MW-3	6/12/91	127090		SULFATE	WC	T	134		1	MG/L
MW-3	9/11/91	133878		ANTIMONY	M	T		U	0.005	MG/L
MW-3	9/11/91	133878		ANTIMONY	M	D		U	0.005	MG/L
MW-3	9/11/91	133878		ARSENIC	M	T	0.003		0.002	MG/L
MW-3	9/11/91	133878		ARSENIC	M	D		U	0.002	MG/L
MW-3	9/11/91	133878		CADMIUM	M	T	0.0004		0.0002	MG/L
MW-3	9/11/91	133878		CADMIUM	M	D	0.0004		0.0002	MG/L
MW-3	9/11/91	133878		CONDUCTIVITY	WC	T	890			UMHOS
MW-3	9/11/91	133878		LEAD	M	T	0.002		0.001	MG/L
MW-3	9/11/91	133878		LEAD	M	D		U	0.001	MG/L
MW-3	9/11/91	133878		PH (FIELD)	WC	T	7.9			STD. UNITS
MW-3	9/11/91	133878		SULFATE	WC	T	116		1	MG/L
MW-3	9/11/91	133878		TEMPERATURE	WC	T	16			DEG C
MW-3	9/11/91	133878		TURBIDITY	WC	T	38			NTU
MW-3	12/4/91	138212		ANTIMONY	M	T		U	0.005	MG/L
MW-3	12/4/91	138212		ANTIMONY	M	D		U	0.005	MG/L
MW-3	12/4/91	138212		ARSENIC	M	T	0.003		0.002	MG/L
MW-3	12/4/91	138212		ARSENIC	M	D	0.002		0.002	MG/L
MW-3	12/4/91	138212		CADMIUM	M	T		U	0.0002	MG/L
MW-3	12/4/91	138212		CADMIUM	M	D		U	0.0002	MG/L

SAMPLE LO	DATE SAMP	LAB ID	DUPLICATE	PARAMETER	GROUP	T OR D	RESULT	QUAL	DL	UNITS
MW-3	12/4/91	138212		LEAD	M	T		U	0.001	MG/L
MW-3	12/4/91	138212		LEAD	M	D		U	0.001	MG/L
MW-3	12/4/91	138212		SULFATE	WC	T	128		1	MG/L
MW-3	3/27/92	143833		ANTIMONY	M	T		U	0.005	MG/L
MW-3	3/27/92	143833		ANTIMONY	M	D		U	0.005	MG/L
MW-3	3/27/92	143833		ARSENIC	M	T	0.046		0.002	MG/L
MW-3	3/27/92	143833		ARSENIC	M	D		U	0.002	MG/L
MW-3	3/27/92	143833		CADMIUM	M	T	0.0003		0.0002	MG/L
MW-3	3/27/92	143833		CADMIUM	M	D		U	0.0002	MG/L
MW-3	3/27/92	143833		CONDUCTIVITY	WC	T	990			UMHOS
MW-3	3/27/92	143833		LEAD	M	T	0.005		0.002	MG/L
MW-3	3/27/92	143833		LEAD	M	D		U	0.002	MG/L
MW-3	3/27/92	143833		PH (FIELD)	WC	T	7.1			STD. UNITS
MW-3	3/27/92	143833		SULFATE	WC	T	99		1	MG/L
MW-3	3/27/92	143833		TEMPERATURE	WC	T	10			DEG C
MW-3	3/27/92	143836	FD	ANTIMONY	M	T		U	0.005	MG/L
MW-3	3/27/92	143836	FD	ANTIMONY	M	D		U	0.005	MG/L
MW-3	3/27/92	143836	FD	ARSENIC	M	T	0.17		0.002	MG/L
MW-3	3/27/92	143836	FD	ARSENIC	M	D		U	0.002	MG/L
MW-3	3/27/92	143836	FD	CADMIUM	M	T		U	0.0002	MG/L
MW-3	3/27/92	143836	FD	CADMIUM	M	D		U	0.0002	MG/L
MW-3	3/27/92	143836	FD	CONDUCTIVITY	WC	T	990			UMHOS
MW-3	3/27/92	143836	FD	LEAD	M	T	0.008		0.002	MG/L
MW-3	3/27/92	143836	FD	LEAD	M	D		U	0.002	MG/L
MW-3	3/27/92	143836	FD	PH (FIELD)	WC	T	7.1			STD. UNITS
MW-3	3/27/92	143836	FD	SULFATE	WC	T	83		1	MG/L
MW-3	3/27/92	143836	FD	TEMPERATURE	WC	T	10			DEG C
MW-3	6/13/92	147732		ANTIMONY	M	T		U	0.005	MG/L
MW-3	6/13/92	147732		ANTIMONY	M	D		U	0.005	MG/L
MW-3	6/13/92	147732		ARSENIC	M	T	0.023		0.002	MG/L
MW-3	6/13/92	147732		ARSENIC	M	D		U	0.002	MG/L
MW-3	6/13/92	147732		CADMIUM	M	T		U	0.0002	MG/L
MW-3	6/13/92	147732		CADMIUM	M	D		U	0.0002	MG/L
MW-3	6/13/92	147732		LEAD	M	T		U	0.002	MG/L
MW-3	6/13/92	147732		LEAD	M	D		U	0.002	MG/L
MW-3	6/13/92	147732		SULFATE	WC	T	147		1	MG/L
MW-3	9/30/92	154202		ANTIMONY	M	T		U	0.005	MG/L
MW-3	9/30/92	154202		ANTIMONY	M	D		U	0.005	MG/L
MW-3	9/30/92	154202		ARSENIC	M	T	0.024		0.002	MG/L
MW-3	9/30/92	154202		ARSENIC	M	D	0.004		0.002	MG/L
MW-3	9/30/92	154202		CADMIUM	M	T		U	0.0002	MG/L
MW-3	9/30/92	154202		CADMIUM	M	D		U	0.0002	MG/L
MW-3	9/30/92	154202		CONDUCTIVITY	WC	T	744			UMHOS
MW-3	9/30/92	154202		LEAD	M	T	0.006		0.002	MG/L
MW-3	9/30/92	154202		LEAD	M	D		U	0.002	MG/L
MW-3	9/30/92	154202		PH (FIELD)	WC	T	7.1			STD. UNITS
MW-3	9/30/92	154202		SULFATE	WC	T	105		1	MG/L
MW-3	9/30/92	154202		TEMPERATURE	WC	T	17			DEG C
MW-3	9/30/92	154202		TURBIDITY	WC	T	57			NTU
MW-3	12/17/92	158569		ANTIMONY	M	T		U	0.005	MG/L
MW-3	12/17/92	158569		ANTIMONY	M	D		U	0.005	MG/L
MW-3	12/17/92	158569		ARSENIC	M	T	0.035		0.002	MG/L
MW-3	12/17/92	158569		ARSENIC	M	D	0.002		0.002	MG/L
MW-3	12/17/92	158569		CADMIUM	M	T		U	0.0002	MG/L
MW-3	12/17/92	158569		CADMIUM	M	D		U	0.0002	MG/L
MW-3	12/17/92	158569		CONDUCTIVITY	WC	T	1040			UMHOS

SAMPLE LO	DATE SAMP	LAB ID	DUPLICATE	PARAMETER	GROUP	T OR D	RESULT	QUAL	DL	UNITS
MW-3	12/17/92	158569		LEAD	M	T		U	0.002	MG/L
MW-3	12/17/92	158569		LEAD	M	D		U	0.002	MG/L
MW-3	12/17/92	158569		PH (FIELD)	WC	T	6.9			STD. UNITS
MW-3	12/17/92	158569		SULFATE	WC	T	130		1	MG/L
MW-3	12/17/92	158569		TEMPERATURE	WC	T	13.9			DEG C
MW-3	12/17/92	158569		TURBIDITY	WC	T	90			NTU
MW-3	12/17/92	158572	FD	ANTIMONY	M	T		U	0.005	MG/L
MW-3	12/17/92	158572	FD	ANTIMONY	M	D		U	0.005	MG/L
MW-3	12/17/92	158572	FD	ARSENIC	M	T	0.042		0.002	MG/L
MW-3	12/17/92	158572	FD	ARSENIC	M	D	0.003		0.002	MG/L
MW-3	12/17/92	158572	FD	CADMIUM	M	T		U	0.0002	MG/L
MW-3	12/17/92	158572	FD	CADMIUM	M	D		U	0.0002	MG/L
MW-3	12/17/92	158572	FD	LEAD	M	T	0.003		0.002	MG/L
MW-3	12/17/92	158572	FD	LEAD	M	D		U	0.002	MG/L
MW-3	12/17/92	158572	FD	SULFATE	WC	T	102		1	MG/L
MW-3	3/29/93	A275265		ANTIMONY	M	T		U	0.005	MG/L
MW-3	3/29/93	A275265		ARSENIC	M	T		U	0.005	MG/L
MW-3	3/29/93	A275265		CADMIUM	M	T		U	0.001	MG/L
MW-3	3/29/93	A275265		LEAD	M	T		U	0.005	MG/L
MW-3	3/29/93	A275265		SULFATE	WC	T	130		50	MG/L
MW-3	3/29/93	A275266	FD	ANTIMONY	M	T		U	0.005	MG/L
MW-3	3/29/93	A275266	FD	ARSENIC	M	T		U	0.005	MG/L
MW-3	3/29/93	A275266	FD	CADMIUM	M	T		U	0.001	MG/L
MW-3	3/29/93	A275266	FD	LEAD	M	T		U	0.005	MG/L
MW-3	3/29/93	A275266	FD	SULFATE	WC	T	110		50	MG/L
MW-3	5/25/93	A279774		ANTIMONY	M	T		U	0.005	MG/L
MW-3	5/25/93	A279774		ARSENIC	M	T		U	0.005	MG/L
MW-3	5/25/93	A279774		CADMIUM	M	T		U	0.001	MG/L
MW-3	5/25/93	A279774		LEAD	M	T		U	0.002	MG/L
MW-3	5/25/93	A279774		SULFATE	WC	T	130		50	MG/L
MW-3	5/25/93	A279775	FD	ANTIMONY	M	T		U	0.005	MG/L
MW-3	5/25/93	A279775	FD	ARSENIC	M	T		U	0.005	MG/L
MW-3	5/25/93	A279775	FD	CADMIUM	M	T		U	0.001	MG/L
MW-3	5/25/93	A279775	FD	LEAD	M	T		U	0.002	MG/L
MW-3	5/25/93	A279775	FD	SULFATE	WC	T	140		50	MG/L
MW-3	9/21/93	A290572		ANTIMONY	M	D		U	0.005	MG/L
MW-3	9/21/93	A290572		ARSENIC	M	D		U	0.005	MG/L
MW-3	9/21/93	A290572		CADMIUM	M	D		U	0.001	MG/L
MW-3	9/21/93	A290572		LEAD	M	D		U	0.005	MG/L
MW-3	9/21/93	A290572		SULFATE	WC	T	120		50	MG/L
MW-3	9/21/93	A290573	FD	ANTIMONY	M	D		U	0.005	MG/L
MW-3	9/21/93	A290573	FD	ARSENIC	M	D		U	0.005	MG/L
MW-3	9/21/93	A290573	FD	CADMIUM	M	D		U	0.001	MG/L
MW-3	9/21/93	A290573	FD	LEAD	M	D		U	0.005	MG/L
MW-3	9/21/93	A290573	FD	SULFATE	WC	T	110		50	MG/L
MW-3	10/27/94	A326581		ANTIMONY	M	D		U	0.005	MG/L
MW-3	10/27/94	A326581		ARSENIC	M	D		U	0.005	MG/L
MW-3	10/27/94	A326581		CADMIUM	M	D		U	0.001	MG/L
MW-3	10/27/94	A326581		LEAD	M	D		U	0.005	MG/L
MW-3	10/27/94	A326581		SULFATE	WC	T	150		25	MG/L
MW-3	10/27/94	A326582	FD	ANTIMONY	M	D		U	0.005	MG/L
MW-3	10/27/94	A326582	FD	ARSENIC	M	D		U	0.005	MG/L
MW-3	10/27/94	A326582	FD	CADMIUM	M	D		U	0.001	MG/L
MW-3	10/27/94	A326582	FD	LEAD	M	D		U	0.005	MG/L
MW-3	10/27/94	A326582	FD	SULFATE	WC	T	140		25	MG/L
MW-3	2/28/95	A335760		ANTIMONY	M	D		U	0.005	MG/L

SAMPLE LO	DATE SAMP	LAB ID	DUPLICATE	PARAMETER	GROUP	T OR D	RESULT	QUAL	DL	UNITS
MW-3	2/28/95	A335760		ARSENIC	M	D		U	0.005	MG/L
MW-3	2/28/95	A335760		CADMIUM	M	D		U	0.001	MG/L
MW-3	2/28/95	A335760		LEAD	M	D		U	0.002	MG/L
MW-3	2/28/95	A335760		SULFATE	WC	T	180		25	MG/L
MW-3	2/28/95	A335761	FD	ANTIMONY	M	D		U	0.005	MG/L
MW-3	2/28/95	A335761	FD	ARSENIC	M	D		U	0.005	MG/L
MW-3	2/28/95	A335761	FD	CADMIUM	M	D		U	0.001	MG/L
MW-3	2/28/95	A335761	FD	LEAD	M	D		U	0.002	MG/L
MW-3	2/28/95	A335761	FD	SULFATE	WC	T	190		25	MG/L
MW-3	6/23/95	A345973		ANTIMONY	M	D		U	0.005	MG/L
MW-3	6/23/95	A345973		ARSENIC	M	D	0.002		0.002	MG/L
MW-3	6/23/95	A345973		CADMIUM	M	D	0.0011		0.0002	MG/L
MW-3	6/23/95	A345973		LEAD	M	D	0.0045		0.002	MG/L
MW-3	6/23/95	A345973		SULFATE	WC	T	140		25	MG/L
MW-3	6/23/95	A345974	FD	ANTIMONY	M	D		U	0.005	MG/L
MW-3	6/23/95	A345974	FD	ARSENIC	M	D	0.0037		0.002	MG/L
MW-3	6/23/95	A345974	FD	CADMIUM	M	D	0.00052		0.0002	MG/L
MW-3	6/23/95	A345974	FD	LEAD	M	D	0.011		0.002	MG/L
MW-3	6/23/95	A345974	FD	SULFATE	WC	T	150		25	MG/L
MW-3	11/27/95	A360996		ANTIMONY	M	D		U	0.005	MG/L
MW-3	11/27/95	A360996		ARSENIC	M	D	0.0036		0.002	MG/L
MW-3	11/27/95	A360996		CADMIUM	M	D		U	0.0002	MG/L
MW-3	11/27/95	A360996		LEAD	M	D	0.0029		0.002	MG/L
MW-3	11/27/95	A360996		SULFATE	WC	T	120		50	MG/L
MW-3	11/27/95	A360997	FD	ANTIMONY	M	D		U	0.005	MG/L
MW-3	11/27/95	A360997	FD	ARSENIC	M	D	0.0044		0.002	MG/L
MW-3	11/27/95	A360997	FD	CADMIUM	M	D		U	0.0002	MG/L
MW-3	11/27/95	A360997	FD	LEAD	M	D		U	0.002	MG/L
MW-3	11/27/95	A360997	FD	SULFATE	WC	T	160		50	MG/L
MW-3	3/18/96	A369089		ANTIMONY	M	D		U	0.005	MG/L
MW-3	3/18/96	A369089		ARSENIC	M	D	0.0027		0.002	MG/L
MW-3	3/18/96	A369089		CADMIUM	M	D		U	0.0002	MG/L
MW-3	3/18/96	A369089		LEAD	M	D		U	0.002	MG/L
MW-3	3/18/96	A369089		SULFATE	WC	T	110		50	MG/L
MW-3	6/17/96	A377990		ANTIMONY	M	D		U	0.005	MG/L
MW-3	6/17/96	A377990		ARSENIC	M	D		U	0.005	MG/L
MW-3	6/17/96	A377990		CADMIUM	M	D		U	0.001	MG/L
MW-3	6/17/96	A377990		LEAD	M	D		U	0.005	MG/L
MW-3	6/17/96	A377990		SULFATE	WC	T	130		50	MG/L
MW-3	9/17/96	A387197		ANTIMONY	M	D		U	0.005	MG/L
MW-3	9/17/96	A387197		ARSENIC	M	D	0.008		0.005	MG/L
MW-3	9/17/96	A387197		CADMIUM	M	D		U	0.0002	MG/L
MW-3	9/17/96	A387197		LEAD	M	D	0.0031		0.002	MG/L
MW-3	9/17/96	A387197		SULFATE	WC	T	150		50	MG/L
MW-3	9/17/96	A387198	FD	ANTIMONY	M	D		U	0.005	MG/L
MW-3	9/17/96	A387198	FD	ARSENIC	M	D	0.013		0.005	MG/L
MW-3	9/17/96	A387198	FD	CADMIUM	M	D	0.00029		0.0002	MG/L
MW-3	9/17/96	A387198	FD	LEAD	M	D	0.0055		0.002	MG/L
MW-3	9/17/96	A387198	FD	SULFATE	WC	T	130		50	MG/L
MW-3	12/27/96	A397281		ANTIMONY	M	T		U	0.005	MG/L
MW-3	12/27/96	A397281		ARSENIC	M	T	0.019		0.002	MG/L
MW-3	12/27/96	A397281		CADMIUM	M	T		U	0.001	MG/L
MW-3	12/27/96	A397281		LEAD	M	T	0.016		0.002	MG/L
MW-3	12/27/96	A397281		SULFATE	WC	T	220		50	MG/L
MW-3	12/27/96	A397282	FD	ANTIMONY	M	T		U	0.005	MG/L
MW-3	12/27/96	A397282	FD	ARSENIC	M	T	0.032		0.004	MG/L

SAMPLE LO	DATE SAMP	LAB ID	DUPLICATE	PARAMETER	GROUP	T OR D	RESULT	QUAL	DL	UNITS
MW-3	12/27/96	A397282	FD	CADMIUM	M	T		U	0.001	MG/L
MW-3	12/27/96	A397282	FD	LEAD	M	T	0.03		0.004	MG/L
MW-3	12/27/96	A397282	FD	SULFATE	WC	T	180		50	MG/L
MW-3	3/21/97	A403573		ANTIMONY	M	D		U	0.005	MG/L
MW-3	3/21/97	A403573		ARSENIC	M	D	0.0028		0.002	MG/L
MW-3	3/21/97	A403573		CADMIUM	M	D		U	0.0002	MG/L
MW-3	3/21/97	A403573		LEAD	M	D		U	0.002	MG/L
MW-3	3/21/97	A403573		SULFATE	WC	T	90		50	MG/L
MW-4	6/12/91	127093		ANTIMONY	M	T		U	0.005	MG/L
MW-4	6/12/91	127093		ANTIMONY	M	D		U	0.005	MG/L
MW-4	6/12/91	127093		ARSENIC	M	T		U	0.002	MG/L
MW-4	6/12/91	127093		ARSENIC	M	D		U	0.002	MG/L
MW-4	6/12/91	127093		CADMIUM	M	T		U	0.0002	MG/L
MW-4	6/12/91	127093		CADMIUM	M	D		U	0.0002	MG/L
MW-4	6/12/91	127093		LEAD	M	T	0.014		0.001	MG/L
MW-4	6/12/91	127093		LEAD	M	D	0.002		0.001	MG/L
MW-4	6/12/91	127093		SULFATE	WC	T	133		1	MG/L
MW-4	9/11/91	133881		ANTIMONY	M	T		U	0.005	MG/L
MW-4	9/11/91	133881		ANTIMONY	M	D		U	0.005	MG/L
MW-4	9/11/91	133881		ARSENIC	M	T		U	0.002	MG/L
MW-4	9/11/91	133881		ARSENIC	M	D		U	0.002	MG/L
MW-4	9/11/91	133881		CADMIUM	M	T	0.0011		0.0002	MG/L
MW-4	9/11/91	133881		CADMIUM	M	D	0.0002		0.0002	MG/L
MW-4	9/11/91	133881		CONDUCTIVITY	WC	T	1000			UMHOS
MW-4	9/11/91	133881		LEAD	M	T	0.008		0.001	MG/L
MW-4	9/11/91	133881		LEAD	M	D		U	0.001	MG/L
MW-4	9/11/91	133881		PH (FIELD)	WC	T	7.5			STD. UNITS
MW-4	9/11/91	133881		SULFATE	WC	T	137		1	MG/L
MW-4	9/11/91	133881		TEMPERATURE	WC	T	16			DEG C
MW-4	9/11/91	133881		TURBIDITY	WC	T	60			NTU
MW-4	12/4/91	138215		ANTIMONY	M	T		U	0.005	MG/L
MW-4	12/4/91	138215		ANTIMONY	M	D		U	0.005	MG/L
MW-4	12/4/91	138215		ARSENIC	M	T		U	0.002	MG/L
MW-4	12/4/91	138215		ARSENIC	M	D		U	0.002	MG/L
MW-4	12/4/91	138215		CADMIUM	M	T		U	0.0002	MG/L
MW-4	12/4/91	138215		CADMIUM	M	D		U	0.0002	MG/L
MW-4	12/4/91	138215		LEAD	M	T	0.004		0.002	MG/L
MW-4	12/4/91	138215		LEAD	M	D		U	0.002	MG/L
MW-4	12/4/91	138215		SULFATE	WC	T	138		1	MG/L
MW-4	12/4/91	138218	FD	ANTIMONY	M	T		U	0.005	MG/L
MW-4	12/4/91	138218	FD	ANTIMONY	M	D		U	0.005	MG/L
MW-4	12/4/91	138218	FD	ARSENIC	M	T		U	0.002	MG/L
MW-4	12/4/91	138218	FD	ARSENIC	M	D		U	0.002	MG/L
MW-4	12/4/91	138218	FD	CADMIUM	M	T		U	0.0002	MG/L
MW-4	12/4/91	138218	FD	CADMIUM	M	D		U	0.0002	MG/L
MW-4	12/4/91	138218	FD	LEAD	M	T	0.006		0.002	MG/L
MW-4	12/4/91	138218	FD	LEAD	M	D		U	0.002	MG/L
MW-4	12/4/91	138218	FD	SULFATE	WC	T	147		1	MG/L
MW-4	3/27/92	143839		ANTIMONY	M	T		U	0.005	MG/L
MW-4	3/27/92	143839		ANTIMONY	M	D		U	0.005	MG/L
MW-4	3/27/92	143839		ARSENIC	M	T		U	0.002	MG/L
MW-4	3/27/92	143839		ARSENIC	M	D		U	0.002	MG/L
MW-4	3/27/92	143839		CADMIUM	M	T		U	0.0002	MG/L
MW-4	3/27/92	143839		CADMIUM	M	D		U	0.0002	MG/L
MW-4	3/27/92	143839		CONDUCTIVITY	WC	T	1080			UMHOS
MW-4	3/27/92	143839		LEAD	M	T		U	0.002	MG/L

SAMPLE LO	DATE SAMP	LAB ID	DUPLICATE	PARAMETER	GROUP	T OR D	RESULT	QUAL	DL	UNITS
MW-4	3/27/92	143839		LEAD	M	D		U	0.002	MG/L
MW-4	3/27/92	143839		PH (FIELD)	WC	T	6.8			STD. UNITS
MW-4	3/27/92	143839		SULFATE	WC	T	122		1	MG/L
MW-4	3/27/92	143839		TEMPERATURE	WC	T	12			DEG C
MW-4	6/13/92	147735		ANTIMONY	M	T		U	0.005	MG/L
MW-4	6/13/92	147735		ANTIMONY	M	D		U	0.005	MG/L
MW-4	6/13/92	147735		ARSENIC	M	T		U	0.002	MG/L
MW-4	6/13/92	147735		ARSENIC	M	D		U	0.002	MG/L
MW-4	6/13/92	147735		CADMIUM	M	T		U	0.0002	MG/L
MW-4	6/13/92	147735		CADMIUM	M	D		U	0.0002	MG/L
MW-4	6/13/92	147735		LEAD	M	T		U	0.002	MG/L
MW-4	6/13/92	147735		LEAD	M	D		U	0.002	MG/L
MW-4	6/13/92	147735		SULFATE	WC	T	117		1	MG/L
MW-4	9/30/92	154205		ANTIMONY	M	T		U	0.005	MG/L
MW-4	9/30/92	154205		ANTIMONY	M	D		U	0.005	MG/L
MW-4	9/30/92	154205		ARSENIC	M	T		U	0.002	MG/L
MW-4	9/30/92	154205		ARSENIC	M	D		U	0.002	MG/L
MW-4	9/30/92	154205		CADMIUM	M	T		U	0.0002	MG/L
MW-4	9/30/92	154205		CADMIUM	M	D		U	0.0002	MG/L
MW-4	9/30/92	154205		CONDUCTIVITY	WC	T	810			UMHOS
MW-4	9/30/92	154205		LEAD	M	T	0.004		0.002	MG/L
MW-4	9/30/92	154205		LEAD	M	D		U	0.002	MG/L
MW-4	9/30/92	154205		PH (FIELD)	WC	T	6.6			STD. UNITS
MW-4	9/30/92	154205		SULFATE	WC	T	119		1	MG/L
MW-4	9/30/92	154205		TEMPERATURE	WC	T	17			DEG C
MW-4	9/30/92	154205		TURBIDITY	WC	T	24			NTU
MW-4	12/17/92	158575		ANTIMONY	M	T		U	0.005	MG/L
MW-4	12/17/92	158575		ANTIMONY	M	D		U	0.005	MG/L
MW-4	12/17/92	158575		ARSENIC	M	T		U	0.002	MG/L
MW-4	12/17/92	158575		ARSENIC	M	D		U	0.002	MG/L
MW-4	12/17/92	158575		CADMIUM	M	T		U	0.0002	MG/L
MW-4	12/17/92	158575		CADMIUM	M	D		U	0.0002	MG/L
MW-4	12/17/92	158575		CONDUCTIVITY	WC	T	1000			UMHOS
MW-4	12/17/92	158575		LEAD	M	T		U	0.002	MG/L
MW-4	12/17/92	158575		LEAD	M	D		U	0.002	MG/L
MW-4	12/17/92	158575		PH (FIELD)	WC	T	7.3			STD. UNITS
MW-4	12/17/92	158575		SULFATE	WC	T	119		1	MG/L
MW-4	12/17/92	158575		TEMPERATURE	WC	T	13.8			DEG C
MW-4	12/17/92	158575		TURBIDITY	WC	T	16			NTU
MW-4	3/29/93	A275267		ANTIMONY	M	T		U	0.005	MG/L
MW-4	3/29/93	A275267		ARSENIC	M	T		U	0.005	MG/L
MW-4	3/29/93	A275267		CADMIUM	M	T		U	0.001	MG/L
MW-4	3/29/93	A275267		LEAD	M	T		U	0.005	MG/L
MW-4	3/29/93	A275267		SULFATE	WC	T	120		50	MG/L
MW-4	5/25/93	A279776		ANTIMONY	M	T		U	0.005	MG/L
MW-4	5/25/93	A279776		ARSENIC	M	T		U	0.005	MG/L
MW-4	5/25/93	A279776		CADMIUM	M	T		U	0.001	MG/L
MW-4	5/25/93	A279776		LEAD	M	T		U	0.002	MG/L
MW-4	5/25/93	A279776		SULFATE	WC	T	140		50	MG/L
MW-4	9/21/93	A290574		ANTIMONY	M	D		U	0.005	MG/L
MW-4	9/21/93	A290574		ARSENIC	M	D		U	0.005	MG/L
MW-4	9/21/93	A290574		CADMIUM	M	D		U	0.001	MG/L
MW-4	9/21/93	A290574		LEAD	M	D		U	0.005	MG/L
MW-4	9/21/93	A290574		SULFATE	WC	T	130		50	MG/L
MW-4	10/27/94	A326583		ANTIMONY	M	D		U	0.005	MG/L
MW-4	10/27/94	A326583		ARSENIC	M	D		U	0.005	MG/L

SAMPLE LO	DATE SAMP	LAB ID	DUPLICATE	PARAMETER	GROUP	T OR D	RESULT	QUAL	DL	UNITS
MW-4	10/27/94	A326583		CADMIUM	M	D		U	0.001	MG/L
MW-4	10/27/94	A326583		LEAD	M	D		U	0.005	MG/L
MW-4	10/27/94	A326583		SULFATE	WC	T	130		25	MG/L
MW-4	2/28/95	A335762		ANTIMONY	M	D		U	0.005	MG/L
MW-4	2/28/95	A335762		ARSENIC	M	D		U	0.005	MG/L
MW-4	2/28/95	A335762		CADMIUM	M	D		U	0.001	MG/L
MW-4	2/28/95	A335762		LEAD	M	D		U	0.002	MG/L
MW-4	2/28/95	A335762		SULFATE	WC	T	140		25	MG/L
MW-4	6/23/95	A345975		ANTIMONY	M	D		U	0.005	MG/L
MW-4	6/23/95	A345975		ARSENIC	M	D		U	0.002	MG/L
MW-4	6/23/95	A345975		CADMIUM	M	D		U	0.0002	MG/L
MW-4	6/23/95	A345975		LEAD	M	D		U	0.002	MG/L
MW-4	6/23/95	A345975		SULFATE	WC	T	110		25	MG/L
MW-4	11/27/95	A360998		ANTIMONY	M	D		U	0.005	MG/L
MW-4	11/27/95	A360998		ARSENIC	M	D		U	0.002	MG/L
MW-4	11/27/95	A360998		CADMIUM	M	D		U	0.0002	MG/L
MW-4	11/27/95	A360998		LEAD	M	D		U	0.002	MG/L
MW-4	11/27/95	A360998		SULFATE	WC	T	100		50	MG/L
MW-4	3/18/96	A369090		ANTIMONY	M	D		U	0.005	MG/L
MW-4	3/18/96	A369090		ARSENIC	M	D		U	0.002	MG/L
MW-4	3/18/96	A369090		CADMIUM	M	D		U	0.0002	MG/L
MW-4	3/18/96	A369090		LEAD	M	D		U	0.002	MG/L
MW-4	3/18/96	A369090		SULFATE	WC	T	76		50	MG/L
MW-4	6/17/96	A377991		ANTIMONY	M	D		U	0.005	MG/L
MW-4	6/17/96	A377991		ARSENIC	M	D		U	0.005	MG/L
MW-4	6/17/96	A377991		CADMIUM	M	D		U	0.001	MG/L
MW-4	6/17/96	A377991		LEAD	M	D		U	0.005	MG/L
MW-4	6/17/96	A377991		SULFATE	WC	T	98		50	MG/L
MW-4	9/17/96	A387199		ANTIMONY	M	D		U	0.005	MG/L
MW-4	9/17/96	A387199		ARSENIC	M	D		U	0.005	MG/L
MW-4	9/17/96	A387199		CADMIUM	M	D		U	0.0002	MG/L
MW-4	9/17/96	A387199		LEAD	M	D	0.0069		0.002	MG/L
MW-4	9/17/96	A387199		SULFATE	WC	T	120		50	MG/L
MW-4	12/27/96	A397283		ANTIMONY	M	T		U	0.005	MG/L
MW-4	12/27/96	A397283		ARSENIC	M	T		U	0.002	MG/L
MW-4	12/27/96	A397283		CADMIUM	M	T		U	0.001	MG/L
MW-4	12/27/96	A397283		LEAD	M	T	0.0043		0.002	MG/L
MW-4	12/27/96	A397283		SULFATE	WC	T	120		50	MG/L
MW-4	3/21/97	A403574		ANTIMONY	M	D		U	0.005	MG/L
MW-4	3/21/97	A403574		ARSENIC	M	D		U	0.002	MG/L
MW-4	3/21/97	A403574		CADMIUM	M	D		U	0.0002	MG/L
MW-4	3/21/97	A403574		LEAD	M	D		U	0.002	MG/L
MW-4	3/21/97	A403574		SULFATE	WC	T	93		50	MG/L
MW-4	3/21/97	A403575	FD	ANTIMONY	M	D		U	0.005	MG/L
MW-4	3/21/97	A403575	FD	ARSENIC	M	D		U	0.002	MG/L
MW-4	3/21/97	A403575	FD	CADMIUM	M	D	0.00021		0.0002	MG/L
MW-4	3/21/97	A403575	FD	LEAD	M	D		U	0.002	MG/L
MW-4	3/21/97	A403575	FD	SULFATE	WC	T	70		50	MG/L
MW-5	6/12/91	127096		ANTIMONY	M	T		U	0.005	MG/L
MW-5	6/12/91	127096		ANTIMONY	M	D		U	0.005	MG/L
MW-5	6/12/91	127096		ARSENIC	M	T		U	0.002	MG/L
MW-5	6/12/91	127096		ARSENIC	M	D		U	0.002	MG/L
MW-5	6/12/91	127096		CADMIUM	M	T		U	0.0002	MG/L
MW-5	6/12/91	127096		CADMIUM	M	D		U	0.0002	MG/L
MW-5	6/12/91	127096		LEAD	M	T	0.005		0.001	MG/L
MW-5	6/12/91	127096		LEAD	M	D	0.001		0.001	MG/L

SAMPLE LO	DATE SAMP	LAB ID	DUPLICATE	PARAMETER	GROUP	T OR D	RESULT	QUAL	DL	UNITS
MW-5	6/12/91	127096		SULFATE	WC	T	143		1	MG/L
MW-5	6/12/91	127099	FD	ANTIMONY	M	T		U	0.005	MG/L
MW-5	6/12/91	127099	FD	ANTIMONY	M	D		U	0.005	MG/L
MW-5	6/12/91	127099	FD	ARSENIC	M	T	0.003		0.002	MG/L
MW-5	6/12/91	127099	FD	ARSENIC	M	D		U	0.002	MG/L
MW-5	6/12/91	127099	FD	CADMIUM	M	T	0.0003		0.0002	MG/L
MW-5	6/12/91	127099	FD	CADMIUM	M	D		U	0.0002	MG/L
MW-5	6/12/91	127099	FD	LEAD	M	T	0.004		0.001	MG/L
MW-5	6/12/91	127099	FD	LEAD	M	D		U	0.001	MG/L
MW-5	6/12/91	127099	FD	SULFATE	WC	T	65		1	MG/L
MW-5	9/11/91	133884		ANTIMONY	M	T		U	0.005	MG/L
MW-5	9/11/91	133884		ANTIMONY	M	D		U	0.005	MG/L
MW-5	9/11/91	133884		ARSENIC	M	T		U	0.002	MG/L
MW-5	9/11/91	133884		ARSENIC	M	D		U	0.002	MG/L
MW-5	9/11/91	133884		CADMIUM	M	T	0.0011		0.0002	MG/L
MW-5	9/11/91	133884		CADMIUM	M	D		U	0.0002	MG/L
MW-5	9/11/91	133884		CONDUCTIVITY	WC	T	760			UMHOS
MW-5	9/11/91	133884		LEAD	M	T		U	0.001	MG/L
MW-5	9/11/91	133884		LEAD	M	D		U	0.001	MG/L
MW-5	9/11/91	133884		PH (FIELD)	WC	T	7.4			STD. UNITS
MW-5	9/11/91	133884		SULFATE	WC	T	66		1	MG/L
MW-5	9/11/91	133884		TEMPERATURE	WC	T	17			DEG C
MW-5	9/11/91	133884		TURBIDITY	WC	T	8			NTU
MW-5	12/4/91	138221		ANTIMONY	M	T		U	0.005	MG/L
MW-5	12/4/91	138221		ANTIMONY	M	D		U	0.005	MG/L
MW-5	12/4/91	138221		ARSENIC	M	T		U	0.002	MG/L
MW-5	12/4/91	138221		ARSENIC	M	D		U	0.002	MG/L
MW-5	12/4/91	138221		CADMIUM	M	T		U	0.0002	MG/L
MW-5	12/4/91	138221		CADMIUM	M	D		U	0.0002	MG/L
MW-5	12/4/91	138221		LEAD	M	T		U	0.002	MG/L
MW-5	12/4/91	138221		LEAD	M	D		U	0.002	MG/L
MW-5	12/4/91	138221		SULFATE	WC	T	80		1	MG/L
MW-5	3/27/92	143842		ANTIMONY	M	T		U	0.005	MG/L
MW-5	3/27/92	143842		ANTIMONY	M	D		U	0.005	MG/L
MW-5	3/27/92	143842		ARSENIC	M	T	0.004		0.002	MG/L
MW-5	3/27/92	143842		ARSENIC	M	D	0.004		0.002	MG/L
MW-5	3/27/92	143842		CADMIUM	M	T		U	0.0002	MG/L
MW-5	3/27/92	143842		CADMIUM	M	D		U	0.0002	MG/L
MW-5	3/27/92	143842		CONDUCTIVITY	WC	T	920			UMHOS
MW-5	3/27/92	143842		LEAD	M	T		U	0.002	MG/L
MW-5	3/27/92	143842		LEAD	M	D		U	0.002	MG/L
MW-5	3/27/92	143842		PH (FIELD)	WC	T	6.9			STD. UNITS
MW-5	3/27/92	143842		SULFATE	WC	T	66		1	MG/L
MW-5	3/27/92	143842		TEMPERATURE	WC	T	11			DEG C
MW-5	6/13/92	147738		ANTIMONY	M	T		U	0.005	MG/L
MW-5	6/13/92	147738		ANTIMONY	M	D		U	0.005	MG/L
MW-5	6/13/92	147738		ARSENIC	M	T	0.057		0.002	MG/L
MW-5	6/13/92	147738		ARSENIC	M	D		U	0.002	MG/L
MW-5	6/13/92	147738		CADMIUM	M	T		U	0.0002	MG/L
MW-5	6/13/92	147738		CADMIUM	M	D		U	0.0002	MG/L
MW-5	6/13/92	147738		LEAD	M	T		U	0.002	MG/L
MW-5	6/13/92	147738		LEAD	M	D		U	0.002	MG/L
MW-5	6/13/92	147738		SULFATE	WC	T	77		1	MG/L
MW-5	6/13/92	147741	FD	ANTIMONY	M	T		U	0.005	MG/L
MW-5	6/13/92	147741	FD	ANTIMONY	M	D		U	0.005	MG/L
MW-5	6/13/92	147741	FD	ARSENIC	M	T	0.057		0.002	MG/L

SAMPLE LO	DATE SAMP	LAB ID	DUPLICATE	PARAMETER	GROUP	T OR D	RESULT	QUAL	DL	UNITS
MW-5	6/13/92	147741	FD	ARSENIC	M	D	0.003		0.002	MG/L
MW-5	6/13/92	147741	FD	CADMIUM	M	T		U	0.0002	MG/L
MW-5	6/13/92	147741	FD	CADMIUM	M	D		U	0.0002	MG/L
MW-5	6/13/92	147741	FD	LEAD	M	T		U	0.002	MG/L
MW-5	6/13/92	147741	FD	LEAD	M	D		U	0.002	MG/L
MW-5	6/13/92	147741	FD	SULFATE	WC	T	87		1	MG/L
MW-5	7/30/92	150534		ANTIMONY	M	T		U	0.005	MG/L
MW-5	7/30/92	150534		ANTIMONY	M	D		U	0.005	MG/L
MW-5	7/30/92	150534		ARSENIC	M	T		U	0.002	MG/L
MW-5	7/30/92	150534		ARSENIC	M	D		U	0.002	MG/L
MW-5	7/30/92	150534		CADMIUM	M	T		U	0.0002	MG/L
MW-5	7/30/92	150534		CADMIUM	M	D		U	0.0002	MG/L
MW-5	7/30/92	150534		LEAD	M	T	0.014		0.002	MG/L
MW-5	7/30/92	150534		LEAD	M	D		U	0.002	MG/L
MW-5	7/30/92	150534		SULFATE	WC	T	59		1	MG/L
MW-5	9/30/92	154208		ANTIMONY	M	T		U	0.005	MG/L
MW-5	9/30/92	154208		ANTIMONY	M	D		U	0.005	MG/L
MW-5	9/30/92	154208		ARSENIC	M	T		U	0.002	MG/L
MW-5	9/30/92	154208		ARSENIC	M	D		U	0.002	MG/L
MW-5	9/30/92	154208		CADMIUM	M	T		U	0.0002	MG/L
MW-5	9/30/92	154208		CADMIUM	M	D		U	0.0002	MG/L
MW-5	9/30/92	154208		CONDUCTIVITY	WC	T	685			UMHOS
MW-5	9/30/92	154208		LEAD	M	T	0.003		0.002	MG/L
MW-5	9/30/92	154208		LEAD	M	D	0.002		0.002	MG/L
MW-5	9/30/92	154208		PH (FIELD)	WC	T	7			STD. UNITS
MW-5	9/30/92	154208		SULFATE	WC	T	64		1	MG/L
MW-5	9/30/92	154208		TEMPERATURE	WC	T	17			DEG C
MW-5	9/30/92	154208		TURBIDITY	WC	T	8			NTU
MW-5	12/17/92	158578		ANTIMONY	M	T		U	0.005	MG/L
MW-5	12/17/92	158578		ANTIMONY	M	D		U	0.005	MG/L
MW-5	12/17/92	158578		ARSENIC	M	T	0.006		0.002	MG/L
MW-5	12/17/92	158578		ARSENIC	M	D	0.002		0.002	MG/L
MW-5	12/17/92	158578		CADMIUM	M	T		U	0.0002	MG/L
MW-5	12/17/92	158578		CADMIUM	M	D		U	0.0002	MG/L
MW-5	12/17/92	158578		CONDUCTIVITY	WC	T	828			UMHOS
MW-5	12/17/92	158578		LEAD	M	T		U	0.002	MG/L
MW-5	12/17/92	158578		LEAD	M	D		U	0.002	MG/L
MW-5	12/17/92	158578		PH (FIELD)	WC	T	7.2			STD. UNITS
MW-5	12/17/92	158578		SULFATE	WC	T	67		1	MG/L
MW-5	12/17/92	158578		TEMPERATURE	WC	T	14.1			DEG C
MW-5	12/17/92	158578		TURBIDITY	WC	T	21.5			NTU
MW-5	3/29/93	A275269		ANTIMONY	M	T		U	0.005	MG/L
MW-5	3/29/93	A275269		ARSENIC	M	T		U	0.005	MG/L
MW-5	3/29/93	A275269		CADMIUM	M	T		U	0.001	MG/L
MW-5	3/29/93	A275269		LEAD	M	T		U	0.005	MG/L
MW-5	3/29/93	A275269		SULFATE	WC	T	74		50	MG/L
MW-5	5/25/93	A279778		ANTIMONY	M	T		U	0.005	MG/L
MW-5	5/25/93	A279778		ARSENIC	M	T		U	0.005	MG/L
MW-5	5/25/93	A279778		CADMIUM	M	T		U	0.001	MG/L
MW-5	5/25/93	A279778		LEAD	M	T		U	0.003	MG/L
MW-5	5/25/93	A279778		SULFATE	WC	T	87		50	MG/L
MW-5	9/21/93	A290575		ANTIMONY	M	D		U	0.005	MG/L
MW-5	9/21/93	A290575		ARSENIC	M	D		U	0.005	MG/L
MW-5	9/21/93	A290575		CADMIUM	M	D		U	0.001	MG/L
MW-5	9/21/93	A290575		LEAD	M	D		U	0.005	MG/L
MW-5	9/21/93	A290575		SULFATE	WC	T	93		50	MG/L

SAMPLE LO	DATE SAMP	LAB ID	DUPLICATE	PARAMETER	GROUP	T OR D	RESULT	QUAL	DL	UNITS
MW-5	10/27/94	A326584		ANTIMONY	M	D		U	0.005	MG/L
MW-5	10/27/94	A326584		ARSENIC	M	D		U	0.005	MG/L
MW-5	10/27/94	A326584		CADMIUM	M	D		U	0.001	MG/L
MW-5	10/27/94	A326584		LEAD	M	D		U	0.005	MG/L
MW-5	10/27/94	A326584		SULFATE	WC	T	88		25	MG/L
MW-5	2/28/95	A335763		ANTIMONY	M	D		U	0.005	MG/L
MW-5	2/28/95	A335763		ARSENIC	M	D		U	0.005	MG/L
MW-5	2/28/95	A335763		CADMIUM	M	D		U	0.001	MG/L
MW-5	2/28/95	A335763		LEAD	M	D		U	0.002	MG/L
MW-5	2/28/95	A335763		SULFATE	WC	T	110		25	MG/L
MW-5	6/23/95	A345977		ANTIMONY	M	D		U	0.005	MG/L
MW-5	6/23/95	A345977		ARSENIC	M	D	0.0023		0.002	MG/L
MW-5	6/23/95	A345977		CADMIUM	M	D	0.0019		0.0004	MG/L
MW-5	6/23/95	A345977		LEAD	M	D	0.0034		0.002	MG/L
MW-5	6/23/95	A345977		SULFATE	WC	T	94		25	MG/L
MW-5	11/27/95	A360999		ANTIMONY	M	D		U	0.005	MG/L
MW-5	11/27/95	A360999		ARSENIC	M	D	0.0029		0.002	MG/L
MW-5	11/27/95	A360999		CADMIUM	M	D		U	0.0002	MG/L
MW-5	11/27/95	A360999		LEAD	M	D		U	0.002	MG/L
MW-5	11/27/95	A360999		SULFATE	WC	T	68		50	MG/L
MW-5	3/18/96	A369092		ANTIMONY	M	D		U	0.005	MG/L
MW-5	3/18/96	A369092		ARSENIC	M	D	0.0027		0.002	MG/L
MW-5	3/18/96	A369092		CADMIUM	M	D	0.00021		0.0002	MG/L
MW-5	3/18/96	A369092		LEAD	M	D		U	0.002	MG/L
MW-5	3/18/96	A369092		SULFATE	WC	T	78		10	MG/L
MW-5	6/17/96	A377992		ANTIMONY	M	D		U	0.005	MG/L
MW-5	6/17/96	A377992		ARSENIC	M	D		U	0.005	MG/L
MW-5	6/17/96	A377992		CADMIUM	M	D		U	0.001	MG/L
MW-5	6/17/96	A377992		LEAD	M	D		U	0.005	MG/L
MW-5	6/17/96	A377992		SULFATE	WC	T	81		50	MG/L
MW-5	9/17/96	A387200		ANTIMONY	M	D		U	0.005	MG/L
MW-5	9/17/96	A387200		ARSENIC	M	D		U	0.005	MG/L
MW-5	9/17/96	A387200		CADMIUM	M	D		U	0.0002	MG/L
MW-5	9/17/96	A387200		LEAD	M	D	0.0086		0.002	MG/L
MW-5	9/17/96	A387200		SULFATE	WC	T	68		50	MG/L
MW-5	12/27/96	A397284		ANTIMONY	M	T		U	0.005	MG/L
MW-5	12/27/96	A397284		ARSENIC	M	T	0.0042		0.002	MG/L
MW-5	12/27/96	A397284		CADMIUM	M	T		U	0.001	MG/L
MW-5	12/27/96	A397284		LEAD	M	T	0.0093		0.002	MG/L
MW-5	12/27/96	A397284		SULFATE	WC	T	90		50	MG/L
MW-5	3/21/97	A403576		ANTIMONY	M	D		U	0.005	MG/L
MW-5	3/21/97	A403576		ARSENIC	M	D		U	0.002	MG/L
MW-5	3/21/97	A403576		CADMIUM	M	D		U	0.0002	MG/L
MW-5	3/21/97	A403576		LEAD	M	D		U	0.002	MG/L
MW-5	3/21/97	A403576		SULFATE	WC	T	100		50	MG/L
MW-5-S	7/30/92	150537		ANTIMONY	M	T		U	0.01	MG/L
MW-5-S	7/30/92	150537		ANTIMONY	M	D		U	0.01	MG/L
MW-5-S	7/30/92	150537		ARSENIC	M	T		U	0.005	MG/L
MW-5-S	7/30/92	150537		ARSENIC	M	D		U	0.005	MG/L
MW-5-S	7/30/92	150537		CADMIUM	M	T	0.001		0.005	MG/L
MW-5-S	7/30/92	150537		CADMIUM	M	D		U	0.005	MG/L
MW-5-S	7/30/92	150537		LEAD	M	T	0.012		0.005	MG/L
MW-5-S	7/30/92	150537		LEAD	M	D		U	0.005	MG/L
MW-5-S	7/30/92	150537		SULFATE	WC	T	72		1	MG/L

SAMPLE LO	DATE SAMP	LAB ID	DUPLICATE	PARAMETER	GROUP	T OR D	RESULT	QUAL	DL	UNITS
MW-1	7/27/94	A317987		ANTIMONY	M	D		U	0.005	MG/L
MW-1	7/27/94	A317987		ARSENIC	M	D	0.0053		0.005	MG/L
MW-1	7/27/94	A317987		CADMIUM	M	D		U	0.001	MG/L
MW-1	7/27/94	A317987		LEAD	M	D		U	0.005	MG/L
MW-1	7/27/94	A317987		SULFATE	WC	T	110		50	MG/L
MW-2	7/27/94	A317986		ANTIMONY	M	D		U	0.005	MG/L
MW-2	7/27/94	A317986		ARSENIC	M	D	0.0051		0.005	MG/L
MW-2	7/27/94	A317986		CADMIUM	M	D		U	0.001	MG/L
MW-2	7/27/94	A317986		LEAD	M	D		U	0.005	MG/L
MW-2	7/27/94	A317986		SULFATE	WC	T	190		100	MG/L
MW-3	7/27/94	A317988		ANTIMONY	M	D		U	0.005	MG/L
MW-3	7/27/94	A317988		ARSENIC	M	D		U	0.005	MG/L
MW-3	7/27/94	A317988		CADMIUM	M	D		U	0.001	MG/L
MW-3	7/27/94	A317988		LEAD	M	D		U	0.005	MG/L
MW-3	7/27/94	A317988		SULFATE	WC	T	200		100	MG/L
MW-3	7/27/94	A317989	FD	ANTIMONY	M	D		U	0.005	MG/L
MW-3	7/27/94	A317989	FD	ARSENIC	M	D		U	0.005	MG/L
MW-3	7/27/94	A317989	FD	CADMIUM	M	D		U	0.001	MG/L
MW-3	7/27/94	A317989	FD	LEAD	M	D		U	0.005	MG/L
MW-3	7/27/94	A317989	FD	SULFATE	WC	T	180		50	MG/L
MW-4	7/27/94	A317990		ANTIMONY	M	D		U	0.005	MG/L
MW-4	7/27/94	A317990		ARSENIC	M	D		U	0.005	MG/L
MW-4	7/27/94	A317990		CADMIUM	M	D		U	0.001	MG/L
MW-4	7/27/94	A317990		LEAD	M	D		U	0.005	MG/L
MW-4	7/27/94	A317990		SULFATE	WC	T	160		50	MG/L
MW-5	7/27/94	A317991		ANTIMONY	M	D		U	0.005	MG/L
MW-5	7/27/94	A317991		ARSENIC	M	D		U	0.005	MG/L
MW-5	7/27/94	A317991		CADMIUM	M	D		U	0.001	MG/L
MW-5	7/27/94	A317991		LEAD	M	D		U	0.005	MG/L
MW-5	7/27/94	A317991		SULFATE	WC	T	100		50	MG/L

PHASE II RCRA FACILITY INVESTIGATION WORK PLAN

Prepared For:

REFINED METALS CORPORATION
Beech Grove, Indiana
EPA ID ID000718130

Prepared By:

ADVANCED GEOSERVICES CORP.
Chadds Ford, Pennsylvania

Project No. 98-478-04
December 20, 2000

EXIDE CORPORATION

December 20, 2000

United States Environmental
Protection Agency -- Region V
RCRA Enforcement Branch
77 W. Jackson Street, Hre-8J
Chicago, IL 60604-3590
Attn: Mr. Jonathan Adenuga

Re: Phase II RCRA Facility Investigation Work Plan
Refined Metals Corporation
Beech Grove, Indiana

Dear Mr. Adenuga:

Pursuant to your request, enclosed is the Phase II RCRA Facility Investigation Work Plan for the subject facility. I certify under penalty of perjury that the information contained in or accompanying this Phase II RCRA Facility Investigation Work Plan is, to the best of my knowledge after thorough investigation, true, accurate, and complete. I am aware that there are significant penalties for submitting false information, including the possibility of fine and imprisonment for knowing violations.

Sincerely,

EXIDE TECHNOLOGIES

Matthew A. Love
Director, Environmental Affairs

Enclosure

cc: Rebecca Joniskan – IDEM (w. encl.)

P.O. Box 14205 • Reading, PA 19612-4205
645 Penn Street • Reading, PA 19601
~~(610) 378-0500~~ 610 939-1628
www.exideworld.com

TABLE OF CONTENTS

PAGE NO.

1.0 Phase II RFI Work Plan 1

1.1 General Site Description 1
1.2 Proposed Scope of Work 2

2.0 Site Setting 3

2.1 Physical Setting 3
2.2 Regional Geology 3
2.3 Regional Hydrogeology 4
2.4 Site Specific Geology 5
2.5 Site Specific Hydrogeology 6

3.0 Proposed Scope of Work 8

3.1 Focus of the Investigation 8
3.2 Groundwater Evaluation 8

3.2.1 Groundwater Flow 8
3.2.2 Groundwater Quality 11

3.2.2.1 Well Development 11
3.2.2.2 Purging 11
3.2.2.3 Groundwater Sampling 12

3.3 Soil Sampling 12
3.4 Sediment Sampling 13

4.0 Ancillary Plans and Schedule 14

4.1 Project Management Plan 14
4.2 Project Quality Assurance 15
4.3 Health and Safety Plan 16
4.4 Community Relations Plan 16
4.5 Schedule 17

5.0 References 18

LIST OF TABLES

TABLE

3-3 Sampling and Analysis Program Summary - Phase II

LIST OF FIGURES

FIGURE

1-1 Site Location Map
3-1 Proposed and Existing Site Well Locations
3-2 Off-Site Soil Sampling Grid
4-1 Anticipated Project Schedule

1.0 PHASE II RFI WORK PLAN

1.1 GENERAL SITE DESCRIPTION

The Refined Metals Corporation (RMC) facility in Beech Grove, Indiana (Site) was the location of secondary lead smelting operations from 1968 through 1995. The location of the Site is shown on Figure 1-1. The Site ceased normal operations on December 31, 1995. The Site, as shown on Figure 1-1, covers approximately 24 acres which includes approximately 10 acres where smelting operations occurred. The remainder of the Site consists of areas of lawn and woods. The former smelter area contains several structures identified as the Battery Breaker, Material Storage and Furnace, Refining, Waste Water Treatment/Filter Press, and Office Buildings. Other small structures exist including a vehicle maintenance building, baghouses, and pump shed.

At this time, the Site is idle except for the waste water treatment system which remains in operation. The waste water treatment system remains in-place to treat storm water collected at the facility. For further descriptions of the facility and operational history please refer to Section 2.0 of RFI Work Plan Version 2.0 dated March 3, 1999 (Phase I RFI Work Plan).

The Phase I RFI Work Plan was developed in 1999, with the intent to utilize the existing information and collect additional information necessary to determine the presence, magnitude, extent and mobility of hazardous waste and hazardous waste constituents on and beneath the former site area and adjacent off-site areas that may have originated from the RCRA permitted hazardous waste or solid waste management units at the Site. The Phase I RFI Work Plan included information such as facility background, geologic setting and ecological setting, proposed investigatory activities and sampling techniques. Following implementation of the Phase I RFI Work Plan, a RCRA Facility Investigation Report (Phase I RFI Report) was submitted to the US EPA which outlined the site specific hydrogeology, geology, methods and procedures used during the investigation and results of the investigation.

The objective of the Phase II hydrogeologic and soil sampling is to collect the additional information recommended in the Phase I RFI Report and further evaluate the existing surface and subsurface conditions. This work plan is organized into two primary sections: one for supplemental groundwater evaluation, and one for supplemental sediment evaluation in the on-site and off-site surface runoff ditches and off-site soil sampling.

1.2 PROPOSED SCOPE OF WORK

The proposed scope of work for the Phase II RFI has been developed based on previous results and comments issued from the US EPA. Sampling activities have been developed under three main tasks which are listed below:

- Further evaluate groundwater flow and quality conditions.
- Characterize the soil metal concentrations to the north and west of the site (off-site).
- Characterize the sediment metal concentrations of the on-site and off-site drainage ditches.

Field activities will include the collection of soil samples, well installation, well development, groundwater sampling, and soil/sediment sampling. Many of the procedures for the field activities reference the Phase I RFI Work Plan.

2.0 SITE SETTING

2.1 PHYSICAL SETTING

The site is located in the White River Drainage Basin. The site is situated on a minor local topographic high with a surface elevation of approximately 845 feet mean sea level (msl). The surface elevation slopes gently to the southeast toward Sloan Ditch, and the northwestern perimeter of the site slopes to the northwest toward the intermittent headwaters of Beech Creek. Surface water at the site is collected in the stormwater management basin and is treated and discharged to the municipal sewer system.

Prior to construction of the present-day stormwater collection and control system, surface water from the northern portion of the facility flowed to the intermittent stream that flows northwest to the headwaters of Beech Creek. Surface water from other areas on the site historically flowed to the same location as the present-day (geomembrane lined) stormwater basin, which was reportedly concrete lined. Water collected in this impoundment either evaporated, or when full, overflowed the banks to a drainage ditch that flowed off-site to the east and then to the south, eventually discharging to Sloan Ditch. Sloan Ditch flows 0.6 mile west-southwest to Churchman Creek, which flows to the west 0.9 mile and discharges to Beech Creek. Beech Creek flows 1.2 miles to the southwest to Lick Creek, which then flows 7 miles to the White River.

2.2 REGIONAL GEOLOGY

The surficial geology of Marion County is glacial till (Tipton Till Plain) consisting of yellowish-gray, bluish-gray, or gray sand or silt with some clay and pebbles and scattered cobbles and boulders. The drift cover in Marion County is believed to be composed of three drift sheets resulting from the Kansan, Illinoian, and Wisconsin glaciations. Thicknesses range from less than 15 feet to greater than 400 feet of till. The site is underlain by approximately 200 feet of unconsolidated material.

Bedrock is encountered at an elevation of approximately 640 feet mean sea level (on the order of 200 feet bgs), and consists of middle Devonian-aged dolomitic limestones. The limestones consist primarily of the Geneva Dolomite and the Jefferson Limestone. The Geneva Dolomite is a light gray to tan and buff to chocolate brown dolomite that contains white crystalline calcite masses. The Jeffersonville Limestone is a pure limestone in the upper portion of the formation, and is laminated with organic material in the lower portion. The organic laminae are more argillaceous than the coralline zone (Harrison, 1963). Meyer, 1975 indicates that shale is present beneath the glacial till and overlying the limestones. Additional detail on the shale unit is not provided by Meyer. The regional dip is to the southwest so that progressively younger formations are encountered below the till plain to the southwest.

2.3 REGIONAL HYDROGEOLOGY

In Marion County, groundwater is encountered in unnamed sand and gravel beds overlying the bedrock, the Jefferson Limestone and Geneva Dolomite, and the Niagaran Limestones (Harrison, 1963). The sand and gravel glacial outwash that coincides with the courses of the White River and Fall Creek is the aquifer of greatest economic importance in Marion County. The location of this aquifer generally coincides with the glacial melt water and outwash deposits along the major streams. Fall Creek enters White River upstream of the site. The White River sand and gravel aquifer is located approximately 5.3 miles west of the site. The sand and gravel aquifer is unconfined and flows toward and discharges to the surface water bodies. The hydraulic conductivity was determined for sand, sand and gravel, and gravel by Meyer, 1975 and are as follows:

Sand	40 ft/day
Sand and Gravel	240 ft/day
Gravel	415 ft/day

The hydraulic conductivity of the silt and clay was determined to be too low for reporting purposes by Meyer. Specific capacity and lithologic information used in Meyer's hydraulic conductivity calculations of the sand and gravel glacial outwash deposits were obtained from drillers' records.

It is noted by Meyer that three thin, areally discontinuous, sheet-like deposits of sand and gravel in the till-plain area are separated by beds of silt and clay that cause the groundwater in these deposits to be semi-confined. Meyer also notes that large areas of silt and clay often separate one area of an aquifer from another. The elevation of the uppermost semi-confined aquifer beneath the Site was estimated to be approximately 720 ft msl (approximately 120 feet bgs) and is overlain by deposits of varying thickness of silt and clay. Groundwater flow in the uppermost regional semi-confined aquifer is to the northwest. The middle regional semi-confined aquifer was not mapped beneath the site because an aquitard (clay unit) is mapped in the area. The elevation of the lower regional semi-confined aquifer beneath the site is approximately 660 ft msl (180 ft bgs) and flow is reported to be towards the southeast.

The average daily industrial and municipal groundwater pumpage for Marion County is 28.95 million gallons per day (mgpd). Less than 20 percent of the industrial/municipal pumpage is from the bedrock. Also, less than 20 percent of the total pumpage is obtained outside the unconfined glacial-outwash aquifer which occurs only along the White River and Fall Creek and is located at least 5.3 miles west of the site. The major centers of groundwater pumpage occurred within approximately one mile of a major stream. The estimated total domestic groundwater pumpage is 9.0 to 11.0 mgpd (Meyer 1975).

2.4 SITE SPECIFIC GEOLOGY

Based on results of the Phase I RFI activities, the surficial geology at the site is consistent with the noted regional geology as described in the Phase II RFI Report Section 3.2. Four deep borings identified as MW-1D, MW-2D, MW-3D and MW-6D were advanced on-site to depths ranging from 110 feet to 130 feet bgs during the RFI to characterize subsurface conditions. Borings MW-2D and MW-6D were subsequently converted into monitoring wells. From these four borings it was determined that a substantial thickness of unconsolidated silt, clay and fine sands exist beneath the site. The thickness of the till plain beneath the site is at least 130 feet as bedrock was not encountered in any of the deep borings.

Various portions of the Site have been altered due to plant operation activities. Several topographic high mounds in the wooded area northeast of the manufacturing area and adjacent to the intermittent stream are believed to be fill material from construction activities on-site. Similarly, paved areas and areas below the structures on-site have been filled with gravel of thicknesses ranging from 6 to 12 inches.

2.5 SITE SPECIFIC HYDROGEOLOGY

Shallow groundwater encountered at the Site is believed to represent a local perched zone of saturation in sand layers within the glacial till. AGC reviewed the logs of the four deep borings advanced during the RFI and the five shallow boring logs advanced prior to installation of site monitoring wells MW-1 through MW-5 in 1991. The boring logs indicate that this sand layer varies in thickness and elevation throughout the site. The potentiometric surface for the groundwater on-site is approximately 10 feet bgs, and flow in the shallow on-site wells appears to be to the southeast. Boring logs for the deep borings on-site indicate that a substantial thickness of silt and clay is deposited below the shallow zone of saturation and overlies the regional uppermost semi-confined water bearing zone. The regional uppermost semi-confined aquifer was not encountered in any of the deep borings.

The deep wells completed on-site for the Phase I RFI (MW-2D and MW-6D) were set in a middle perched zone located 75 to 85 feet below grade. It should be noted that these borings were advanced to 110 and 123 feet below grade, respectively, and did not encounter the regional upper-most semi-confined aquifer. Groundwater sampling results for the middle perched zone indicated a total lead concentration over the 4 μg/L Region IX PRG screening level being utilized for groundwater in one sample, although that single result is associated with blank contamination for lead at a concentration that was greater than the concentration encountered. Arsenic was encountered in both wells during both rounds of sampling. Similar to the elevated levels of arsenic in soil in the region, it is believed that the concentrations encountered are representative of regional background levels and not impacts from former facility operations. This middle perched zone was not encountered throughout the entire site and is laterally discontinuous.

Monitoring wells were not installed at the middle perched zones at locations MW-1 and MW-3 due to the lack of water (boring logs were presented in Appendix A of the Phase I RFI Report). Substantial low permeability silty/clay to clayey silt was encountered at both locations. The boring log from location MW-1D indicated that the hole was dry to slightly moist to depths of 130 feet bgs. At location MW-1D the potential water bearing sand units were encountered at depths of 60 to 62 feet and 66 to 68 feet bgs and were noted to be either dry or only slightly moist. Thin dry to moist sand layers were also observed at monitoring well location MW-3 at depths of 60 to 64, 69 tp 70, and 127 to 130 feet bgs. The geologic conditions observed at locations MW-1 and MW-3 indicate that the middle perched zone does not exist and, therefore, the groundwater conditions were not investigated.

Monitoring well MW-4 existed at the site prior to the initiation of the RFI, and was incorporated into the groundwater monitoring sampling events that occurred in September 1999 and December 1999. Results of analysis indicates that lead was not detected at a concentration above the detection level, and the detection level did not exceed screening preliminary remediation goal (PRG) of 4 μg/L (Region 9) or the USEPA Safe Drinking Water (December 1999) action level of 15 μg/L. Based on the lack of detected concentrations of lead in the shallow well, MW-4, AGC believes that a deeper investigation at this location is unwarranted.

Due to the substantial layers of silt and clay, combined with the areal discontinuity of the regional uppermost semi-confined aquifer, it is believed that there is no direct hydraulic connection between the shallow and middle perched zones and the regional uppermost semi-confined aquifer. Based on the laterally discontinuous middle perched zone and lack of detected constituents of concern from this zone AGC believes that further deeper investigations at the Site are unwarranted.

3.0 PROPOSED SCOPE OF WORK

3.1 FOCUS OF THE INVESTIGATION

The proposed scope of work for the Phase II RFI at the Beech Grove facility has been developed to address specific recommendations from the Phase I RFI Report and US EPA comments. Sampling activities have been developed under three main tasks which are listed.

- Further evaluation of groundwater flow and quality conditions.
- Characterize the soil metal concentrations to the north and west of the Site.
- Characterize the sediment metal concentrations of the on-site and off-site drainage ditches.

3.2 GROUNDWATER EVALUATION

3.2.1 Groundwater Flow

Four deep borings were advanced at various locations at the site during the Phase I RFI to collect information regarding the subsurface geology and depth to the regional groundwater table. None of the deep borings encountered the semi-confined regional aquifer as described by Meyers (1975). Two of the deep borings encountered a middle perched zone. Consequently, monitoring wells were installed in only two of the deep borings to determine the effect, if any, that the RMC facility had upon the middle perched zone. These wells are shown on Figure 3-1. Water levels collected from the shallow wells during the Phase I RFI were used to construct a potentiometric surface map which indicated radial flow under the Site. Based on the evaluation of groundwater flow during the Phase I RFI, AGC recommended that the installation of two additional shallow groundwater wells:

- One well north of the paved facility area; and
- One background well.

Based on comments from the US EPA, AGC revised the recommendation to install three shallow monitoring wells at the site:

- Two shallow wells down gradient of the MW-2/MW-2D location, which would monitor the north portion of the paved facility area; and

- One shallow background well in the western corner of the site. This well will be placed in the least impacted surface soil location. AGC recognizes that this well will be considered a cross gradient well. No up-gradient, on-site wells can be installed on the true upgradient property boundary due to elevated soil lead concentrations in this area, and the existence of radial groundwater flow at the Site.

In addition, this work plan is proposing the installation of a fourth well as a replacement for MW-6S in the same general area of MW-6S. AGC has recommended to replace MW-6S for the following reasons:

- The well is screened in the upper confining layer (silt/clay) and, therefore, is not effectively monitoring the upper semi-confined aquifer.

- The well must be sampled with a bailer due to low recharge ratio (recharge is as low as 1-gallon in 24 hours). Therefore, only excessively turbid samples which are not indicative of actual groundwater conditions are obtained.

AGC recommends to install a shallow well near the existing MW-6S well and set the screen at an approximate depth of 31 feet bgs in a sand/silt unit that occurs from 24 to 31 feet bgs.

Proposed new well locations are presented on Figure 3-1.

The shallow wells will be installed using standard 8-inch ID hollow stem auger techniques in accordance with ASTM D 1586 to depths of approximately 30 to 40 feet below ground surface. Wells will be installed with logging, drilling, well development and decontamination procedures noted in the Phase I RFI Work Plan. Monitoring wells will be constructed of 4-inch, flush-threaded, Schedule 40 PVC riser with a 10-foot length of factory slotted 0.010-inch or 0.005-inch PVC well screen. Screen slot size will be determined by the field conditions. A sand pack will be placed around the screen to 2 feet above the top of the screen with Morie number 1 or 0 (or equivalent) sand pack. A minimum 2-foot thick bentonite seal will be placed on top of the sand pack and hydrated with potable water for approximately 15 minutes prior to the installation of the grout. The remaining annulus of each well will be tremi-grouted to the surface using a 95% Portland cement and bentonite (5-7%) mixture grout.

During collection of the soil samples for logging purposes, a maximum of two undisturbed samples from the upper clay/silt unit will be collected. The undisturbed soil samples will be collected using a Shelby tube following procedures outlined in ASTM 1587-94. The undisturbed samples will be collected to determine the vertical permeability following ASTM D-2434-68 for falling head permeability.

All newly installed wells will be surveyed by an Indiana-licensed surveyor. The top of the inner casing, top of the outer casing, and the ground surface at each well will be surveyed to 0.01 foot accuracy.

Prior to groundwater sampling, a round of synoptic depth-to-water measurements will be collected from the monitoring wells. The synoptic measurements will involve the measurement of water levels and the depths in on-site monitoring wells and piezometers in as short time frame as possible to determine the water level surface and the approximate direction of groundwater movement across the Site. A potentiometric surface map will be constructed using the groundwater elevations to determine the direction of groundwater flow.

Monitoring well MW-6S will be abandoned using a Portland cement/bentonite (7% mixture) that will be tremie-grouted to the bottom of the well. All protective casing will either be pulled from the ground or will be cut approximately 2-feet below ground surface.

3.2.2 Groundwater Quality

3.2.2.1 **Well Development**

Prior to the collection of any groundwater samples, all existing and new shallow wells will be developed using a surge-block and pump method. Well development will continue using procedures outlined in the Phase I RFI Work Plan until the development water in each well is relatively sediment free, and exhibits satisfactory clarity, yield, and stabilized pH and specific conductance readings. The wells will be allowed to equilibrate for a minimum of a two week period prior to the initiation of any groundwater sampling activities. Decontamination of well development equipment will follow procedures outlined in the Phase I RFI Work Plan.

3.2.2.2 **Purging**

The depth-to-water in each monitoring well will be determined and the purge volume will be calculated. This will provide the sampling team with an estimate of approximate purging time for stabilization of purge parameters. The wells will be purged using a decontaminated stainless steel low-flow bladder pump that will be placed at the mid-point of the screen. The wells will be purged according to the procedures outlined in the Phase I RFI Work Plan. The purge parameters of pH, temperature, conductivity, redox potential, and dissolved oxygen will be collected using a flow-through cell. Turbidity will also be measured during purging. The parameters will be allowed to stabilize to within 10% over three readings and pH readings differ by less than 0.1 unit.

All purging and sampling will be completed from the least suspected contaminated well to the most contaminated well to minimize the potential for cross-contamination.

3.2.2.3 **Groundwater Sampling**

Once the field parameters have stabilized, the groundwater samples will be collected in laboratory-supplied bottles containing the necessary preservatives following procedures outlined in the RFI Work Plan. The samples will be packed with ice and shipped to TriMatrix Laboratories Inc. for analysis of eight RCRA metals, and antimony using EPA Method SW-846 6010/7000 series depending on the required detection limits for the project. If groundwater samples cannot be collected using low-flow procedures, then total and dissolved metal samples will be collected. Samples for dissolved metals will be filtered through a dedicated disposable Nalgene 0.45 μm membrane filter immediately after collection and prior to preservation.

All decontamination, sample handling and shipment protocols will follow procedures outlined in the Phase I RFI Work Plan.

Two groundwater sampling rounds are proposed for the shallow monitoring wells at the Site. There will be no less than three months between sampling rounds.

3.3 SOIL SAMPLING

Off-site soil samples will be collected to more fully characterize the extent of site-related constituents. A 200-foot grid will be used to guide the soil sampling efforts (Figure 3-2). The grid will extend 600' towards the west along the western property line and 800' towards the north, although as stated in the Phase I RFI Work Plan, not every grid node will necessarily be sampled because of access and location selection criteria. Approximately 65 locations will be sampled off-site. All samples will be analyzed for lead and arsenic. Surface samples (0-3 inches) will be collected using dedicated disposable scoops; and subsurface samples (3-10 inches) will be collected using decontaminated hand augers. The samples will be homogenized in decontaminated stainless steel bowls prior to being placed in the laboratory-supplied sample jars. The decontamination procedures which will be followed are presented in Appendix B of the Phase I RFI Work Plan. Soil locations will be surveyed by a professional surveyor licensed in the state of Indiana.

3.4 SEDIMENT SAMPLING

Sediment samples from depths of 0-6-inches and 6-12-inches will be collected along the storm water ditch that drains the northwest corner of the site and from the existing stormwater retention lagoon that drains to the south of the site (Figure 3-1). Approximately 400 linear feet of the northwest drainage ditch will be sampled using a 75-foot grid spacing. Approximately 1400 linear feet of the retention/south drainage ditch will be sampled using a 75-foot grid spacing. A total of 12 samples from six locations will be collected from the northwest ditch. A total of 32 samples from 16 locations will be collected from the off-site area along the fenceline from the south ditch. All samples will be collected from the center of the drainage channels. All samples will be collected using a decontaminated hand auger. Soil samples will be homogenized in decontaminated stainless steel bowls prior to placement into laboratory-supplied jars. All samples will be analyzed for lead and arsenic. Sediment locations will be surveyed by a professional surveyor licensed in the State of Indiana.

4.0 ANCILLARY PLANS AND SCHEDULE

The following plans will be used during completion of the Phase II RFI:

- Project Management Plan
- Quality Assurance Project Plan and Data Management Plan
- Health and Safety Plan
- Community Relations Plan

4.1 PROJECT MANAGEMENT PLAN

The Project Management Plan describes the project organization, key personnel, and their roles and responsibilities to complete the RFI. Technical and administrative roles for this Phase II RFI will be assigned to staff or subcontractors who have the appropriate qualifications to carry out their respective responsibilities. The project management plan will be followed as outlined in Appendix A of the Phase I RFI Work Plan with the following changes.

AGC Quality Assurance Manager - Jennifer Baier

AGC Task Manager(s) - Kathryn West

Ms. West will serve as the task manager responsible for directing and supervising the abandonment, drilling, well installation, development, and all sampling activities that will occur under this Phase II RFI. The task manager will be responsible for providing an interface between the Project Manager and various staff and technical personnel, managing subcontractors, implementing and overseeing project plans, directing field activities, and monitoring investigation progress, quality control, writing and reviewing technical documents, and monitoring budget status.

Health and Safety Officer

One field personnel (team lead) will be assigned to serve as the Site Health and Safety Officer and will have responsibility and authority to implement the health and safety plan (HASP) during implementation of field activities. The project manager will maintain the authority to re-assign the Health and Safety Officer responsibilities throughout the duration of the project.

4.2 PROJECT QUALITY ASSURANCE

The Quality Assurance Project Plan and Data Management Plan describes the data collection and management procedures to be followed during the course of the RFI. Procedures to be used during the sample collection and custody through the shipment to the laboratory are provided. The data validation and management procedures are also presented in the document. The Quality Assurance Project Plan and Data Management Plan are provided as Appendix B of the Phase I RFI Work Plan.

Technical and administrative roles for this Phase II RFI will be assigned to staff or subcontractors who have the appropriate qualifications to carry out their respective responsibilities. The Quality Assurance Project Plan including sampling procedures will be followed as outlined in Appendix B of the Phase I RFI Work Plan with the following changes:

Section 1.1.1 and Section 1.1.2: The overall objectives during Phase II of the data collection will not include dust sampling. Parameters listed in Table 1-1 were proposed for the Phase I RFI and will be incorporated into the Phase II plan with the exception that no volatile organic analyses will be requested.

Section 2.3 Quality Assurance Responsibilities: Quality Assurance Manager for Advanced GeoServices will be Jennifer Baier, and no field audit will be conducted during the Phase II.

Table 3-3 Sampling and Analysis Program: Summary has been updated for the Phase II sampling requirements.

4.1 Groundwater Sampling: Two groundwater sampling events will be conducted for all existing and proposed shallow on-site monitoring well locations.

4.2 Soil Sampling: Soil samples will be collected using a 200 foot grid spacing in off-site areas north and west of the Site. At a minimum 130 soil samples will be collected from 65 locations.

4.3 Interior Sampling: No interior sampling will be performed during the Phase II RFI field activities.

4.4 Sediment Sampling: Sampling of 0-6 inches and 6-12 inches below ground surface will be performed in the northern drainage ditch and the western drainage ditch (from the storm water lagoon). Sediment samples will be collected from on-site and off-site locations.

4.3 HEALTH AND SAFETY PLAN

The Health and Safety Plan is provided as Appendix C of the Phase I RFI Work Plan. The Health and Safety Plan will be followed by all personnel conducting sampling activities at the Site. Technical and administrative roles for this Phase II RFI will be assigned to staff who have the appropriate qualifications to carry out their respective responsibilities. The project Health and Safety Plan will be followed as presented in Appendix C of the Phase I RFI Work Plan with only personnel changes as noted above in Section 4.1.

4.4 COMMUNITY RELATIONS PLAN

The Community Relations Plan is provided as Appendix D of the Phase I RFI Work Plan. The plan is intended to describe the procedures for disseminating information about the RFI to the general public. The project Community Relations Plan will be followed during the Phase II RFI as presented in Appendix D of the Phase I RFI Work Plan with only the proposed scope of work and activities

modified to reflect the objectives of the Phase II scope of work and changes in personnel as noted above in Section 4.1.

4.5 SCHEDULE

The estimated project schedule is shown on Figure 4-1, and shows that the Phase II RFI investigation will be conducted in a sequence of progressive work tasks. The Phase II RFI Work Plan delivery, review and approval by USEPA and IDEM comprise the first task.

5.0 REFERENCES

Meyer, Wm., J.P. Resson, and Gillies, D.C. Availability of Groundwater in Marion County, Indiana, U.S. Geological Survey. Open-File Report 75-312.

TABLES

TABLE 3-3
REFINED METALS SITE
SAMPLING AND ANALYSIS PROGRAM SUMMARY - PHASE II RFI

Sample Location	Matrix	Parameters	Number of Samples[3]	Field Duplicate	Matrix Spike	Blank[1]	Total Number of Samples[2]
Monitoring Wells (Total of 9 Wells)	Groundwater (Round 1) *Two sampling rounds are proposed.*	Turbidity	9	-	-	-	9
		pH	9	-	-	-	9
		Redox potential	9	-	-	-	9
		Specific Conductance	9	-	-	-	9
		Temperature	9	-	-	-	9
		Dissolved Oxygen	9	-	-	-	9
		RCRA Metals[4] plus Antimony	9	1	2	2	14
Off-Site Soils	Soil	Lead and Arsenic	130	26	13	26	195
Drainage Channels	Sediment	Lead and Arsenic	NW 12 South 32	2 4	1 2	2 4	17 42

Notes
1 Blank total includes estimated number of field and equipment blanks.
2 Total number samples per event not including QA/QC.
3 This number reflects the fewest amount of samples to be taken.
4 RCRA Metals include arsenic, barium, cadmium, chromium, lead, selenium, and silver.

FIGURES

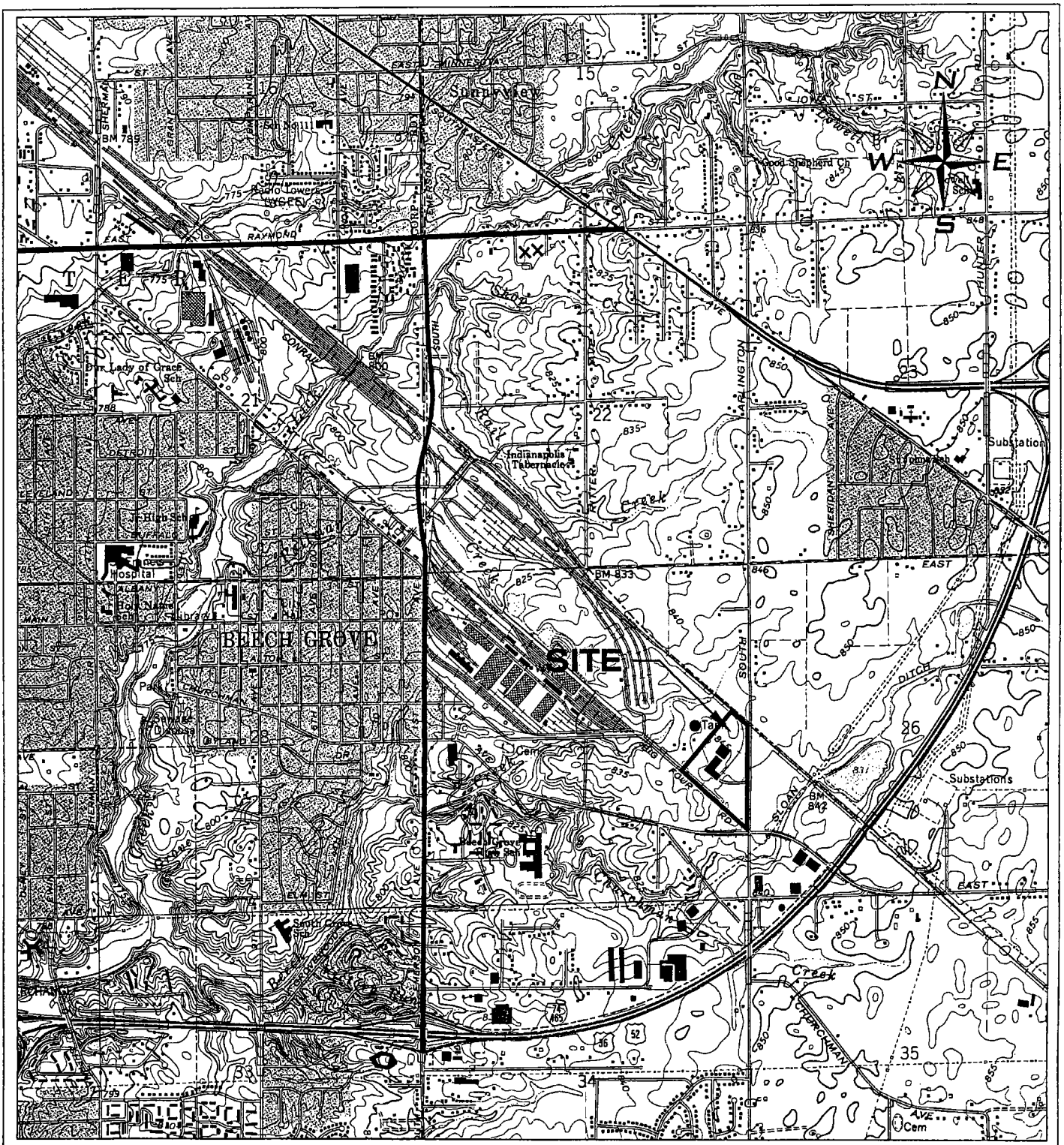

REF. U.S.G.S. 7 1/2 MINUTE
BEECH GROVE, IND
QUADRANGLE MAP

REFINED METALS CORPORATION
PHASE II RCRA FACILITY INVESTIGATION
BEECH GROVE, IN

Date: 8/27/98	SITE LOCATION MAP
Scale: N.T.S.	
Drawn By: P.S.G.	Advanced GeoServices Corp.
Checked By: S.W.K.	Chadds Ford Business Campus, Rts. 202 & 1
Project Mgr: P.G.S.	Brandywine One, Suite 202
Dwg No. 98478-01	Chadds Ford, Pennsylvania 19317
Issued:	Project No. 98-478-01 — FIGURE: 1-1

J:\REFINED METALS\DRAWINGS\9847801\98478-18

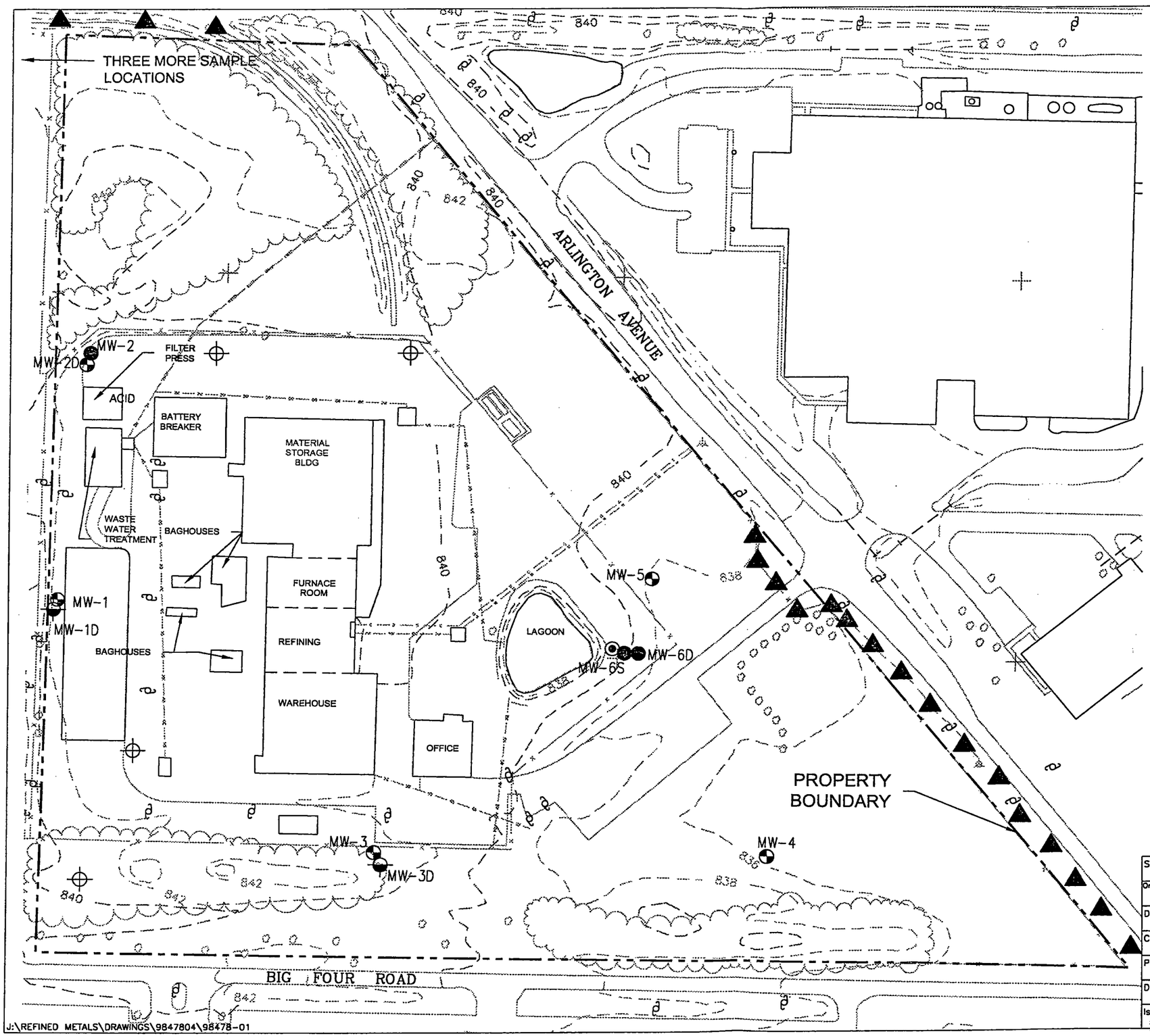

LEGEND

- EXISTING MONITORING WELL–SURVEYED BY THE SCHNEIDER CORP., INDIANAPOLIS, IN
- MONITORING WELL–INSTALLED AS PART OF RFI ACTIVITIES–SURVEYED BY THE SCHNEIDER CORP., INDIANAPOLIS, IN
- MW–1D — DEEP TEST BORING FROM RFI ADVANCED WITH INTENTION OF CREATING DEEP WELL THAT DID NOT ENCOUNTER WATER AND THEREFORE MONITORING WELL WAS NOT CONSTRUCTED
- PROPOSED PHASE II SHALLOW MONITOR WELL INSTALLATION LOCATION.
- REPLACEMENT LOCATION WELL
- PROPOSED SEDIMENT SAMPLING ALONG DRAINAGE DITCHES.

NOTE:

WELLS DRILLED DURING THE RFI AND CLOSURE INVESTIGATIONS HAVE BEEN ASSIGNED AN S OR D TO DESIGNATE SHALLOW AND DEEP WELLS RESPECTIVELY. ORIGINAL WELLS NOT DESIGNATED WITH AN S OR D ARE CONSIDERED SHALLOW WELLS.

REFINED METALS CORPORATION PHASE II RCRA FACILITY INVESTIGATION

BEECH GROVE, IN

Scale: 1"=130'	PROPOSED AND EXISTING SITE WELL LOCATIONS
Originated By: K.A.W.	
Drawn By: P.S.G.	
Checked By: KAW	Advanced GeoServices Corp. Chadds Ford Business Campus, Rts. 202 & 1 Brandywine One, Suite 202 Chadds Ford, Pennsylvania 19317
Project Mgr: P.G.S.	
Dwg No. 98478-16	
Issued:	Project No. 98-478-04 — FIGURE: 3-1

J:\REFINED METALS\DRAWINGS\9847804\98478-01

Revision	Description	Date	By

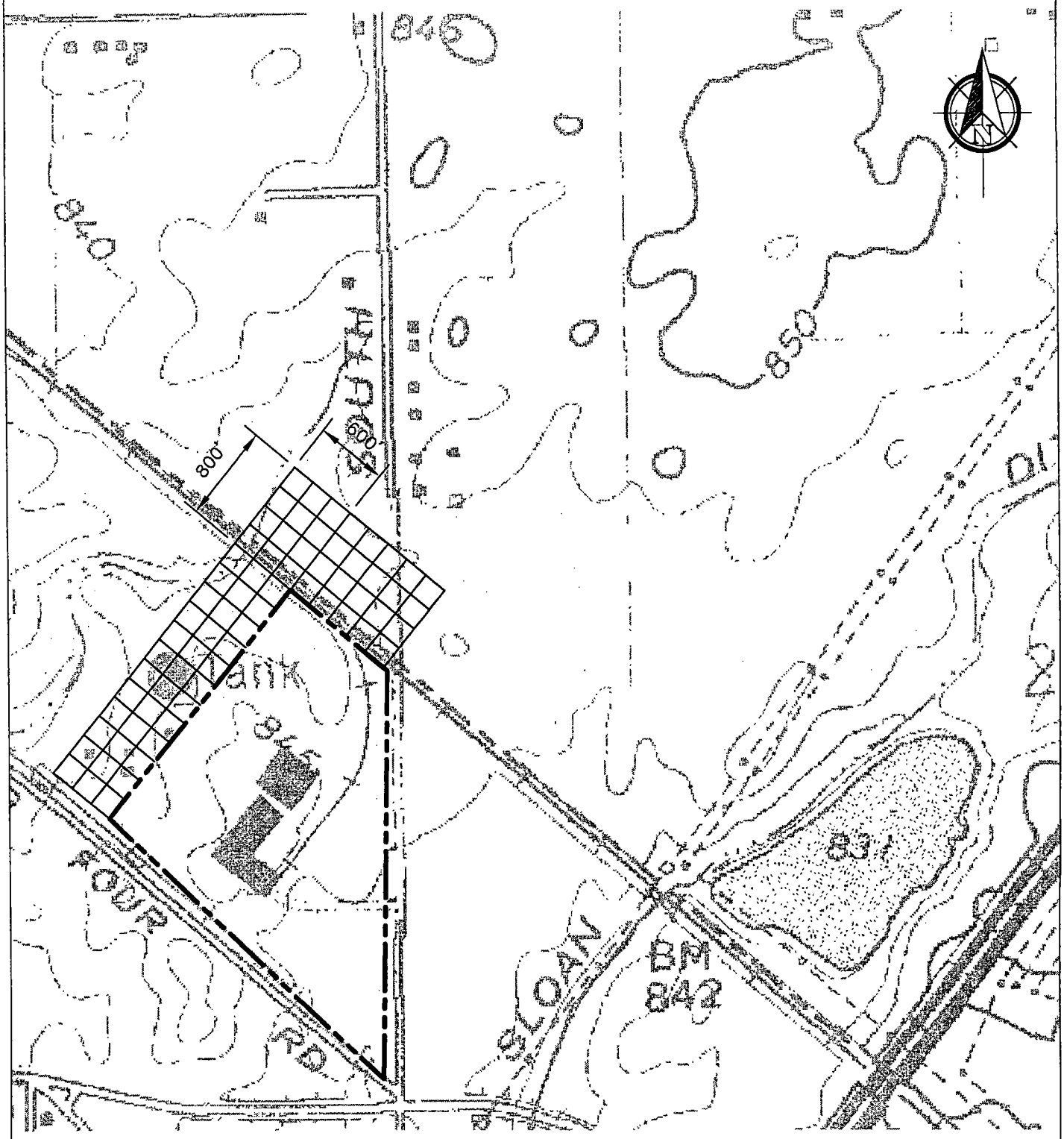

REF. USGS 7 1/2 MINUTE QUADANGLE MAP

REFINED METALS CORPORATION
PHASE II RCRA FACILITY INVESTIGATION
BEECH GROVE, IN

LEGEND

PROPERTY BOUNDARY

SOIL SAMPLING GRID

Scale: APPROX 1"=2000'	OFF-SITE SOIL SAMPLING GRID
Originated By: K.A.W.	
Drawn By: P.S.G.	Advanced GeoServices Corp. Chadds Ford Business Campus, Rts. 202 & 1 Brandywine One, Suite 202 Chadds Ford, Pennsylvania 19317
Checked By: K.A.W.	
Project Mgr: P.G.S.	
Dwg No. 98478-02	Project No. 98-478-04
Issued:	FIGURE: 3-2

J:\REFINED METALS\DRAWINGS\98-478-04\98478-02

Revision	Description	Date	By

ID	TASK NAME	APPROXIMATE DURATION*	MONTH 1	MONTH 2	MONTH 3	MONTH 4	MONTH 5	MONTH 6	MONTH 7	MONTH 8	MONTH 9
1	UTILITY MARKOUTS/MEETINGS	4 DAYS									
2	ACCESS AGREEMENTS	5 DAYS									
3	SUBCONTRACTING	5 DAYS									
4	CLEARING	4 DAYS									
5	MOBILIZATION	2 DAYS									
6	MONITORING WELL INSTALLATION/ABANDONMENT	6 DAYS									
7	WELL DEVELOPMENT (ALL SHALLOW WELLS)	5 DAYS									
8	WASTE CHARACTERIZATION AND DISPOSAL	20 DAYS									
9	EQUILIBRIUM PERIOD	14 DAYS									
10	GROUNDWATER SAMPLING**	6 DAYS									
11	SOIL/SEDIMENT SAMPLING	5 DAYS									
12	DEMOBILIZATION	1 DAYS									
13	LABORATORY ANALYSIS	60 DAYS									
14	RECIEPT OF LABORATORY DATA	2 DAYS									
15	LABORATORY DATA EVALUATION/VALIDATION	35 DAYS									
16	REPORT	95 DAYS									

* ASSUMES 8 HOUR WORKDAYS

REFINED METALS CORPORATION
PHASE II RCRA FACILITY INVESTIGATION
BEECH GROVE, IN

Scale: N.T.S.	ANTICIPATED PROJECT SCHEDULE
Originated By: K.A.W.	
Drawn By: V.E.N.	
Checked By:	Advanced GeoServices Corp. Chadds Ford Business Campus, Rts. 202 & 1 Brandywine One, Suite 202 Chadds Ford, Pennsylvania 19317
Project Mgr: P.G.S.	
Dwg No. 98478-03	Project No. 98-478-04
	FIGURE: 4-1

DEC 2 0 2000

J:\REFINED METALS\DRAWINGS\9847804\98478-03

WORK PLAN
FOR
INSTALLATION OF INTERIM MEASURES
AT THE
REFINED METALS CORPORATION FACILITY
BEECH GROVE, INDIANA

Prepared For:

REFINED METALS CORPORATION
Reading, Pennsylvania

Prepared By:

ADVANCED GEOSERVICES CORP.
Chadds Ford, Pennsylvania

Project No. 98-478-04
December 20, 2000

WORK PLAN
FOR
INSTALLATION OF INTERIM MEASURES
AT THE
REFINED METALS CORPORATION FACILITY
BEECH GROVE, INDIANA

Prepared For:

REFINED METALS CORPORATION
Reading, Pennsylvania

Prepared By:

ADVANCED GEOSERVICES CORP.
Chadds Ford, Pennsylvania

Project No. 98-478-04
December 20, 2000

PAUL G. STRATMAN
REGISTERED
No. 9400366
STATE OF INDIANA
PROFESSIONAL ENGINEER

Paul G. Stratman, P.E.
Senior Project Engineer

EXIDE CORPORATION

December 20, 2000

United States Environmental
Protection Agency – Region V
RCRA Enforcement Branch
77 W. Jackson Street, Hre-8J
Chicago, IL 60604-3590
Attn: Mr. Jonathan Adenuga

Re: Work Plan for Installation of Interim Measures
Refined Metals Corporation
Beech Grove, Indiana

Dear Mr. Adenuga:

Pursuant to your request, enclosed is the Work Plan for Installation of Interim Measures for the subject facility. I certify under penalty of perjury that the information contained in or accompanying this Work Plan for Installation of Interim Measures is, to the best of my knowledge after thorough investigation, true, accurate, and complete. I am aware that there are significant penalties for submitting false information, including the possibility of fine and imprisonment for knowing violations.

Sincerely,

EXIDE TECHNOLOGIES

Matthew A. Love
Director, Environmental Affairs

Enclosure

cc: Rebecca Joniskan – IDEM (w. encl.)

P.O. Box 14205 • Reading, PA 19612-4205
645 Penn Street • Reading, PA 19601
(610) 378-0500
www.exideworld.com

TABLE OF CONTENTS

PAGE NO.

1.0 Background 1

1.1 Check Dams 1
1.2 Silt Fence 2
1.3 Permits and Approvals 2

2.0 Specifications 4

2.1 Rock Filter Specifications 4
2.2 Geotextile Specifications 4
2.3 Silt Fence Specifications 5

LIST OF TABLES

TABLE

1 Physical Requirements for Geotextile

LIST OF FIGURES

FIGURE

1 Proposed Check Dam Locations
2 Check Dam Detail
3 Proposed Check Dam Cross Section
4 Silt Fence Detail

1.0 BACKGROUND

Pursuant to comments from the United States Environmental Protection Agency (USEPA) on the RCRA Facility Investigation Report (Revision 1.0) for the Refined Metals Corporation (RMC) facility in Beech Grove, Indiana, RMC submits this Interim Measures Work Plan. This plan has been prepared by Advanced GeoServices Corp. (AGC), on behalf of RMC, to address concerns raised by USEPA in their November 29, 2000 comment letter related to the potential for lead-containing sediments to be eroded from the drainage ditch along the railroad track at the north end of the site and subsequently transported off-site.

The Interim Measures proposed consist of the construction of stone check dams periodically along the alignment of the ditch. The check dams will effectively retain surface water runoff which reduces velocity (and therefore reduces the energy necessary to cause erosion), and encourages deposition of suspended solids. This solution was developed based on consideration of the very flat topographic conditions, relatively small contributing drainage area, pervious cover of brush and trees, field observations that no significant scouring or erosion are currently occurring in the ditch, and conversations with the USEPA Project Manager.

It is recognized that these measures are only intended to service as a temporary solution and that excavation and removal within the ditch will ultimately be required. The use of the temporary measures will allow lead-impacted sediments to remain in place until site contamination is fully delineated and an all-encompassing approach to corrective action can be developed and implemented.

1.1 CHECK DAMS

As described above, the proposed Interim Measures will consist of constructing check dams along the alignment of the existing drainage ditch (on both sides of the railroad track) at the locations shown on the attached Figure 1. A total of four check dams will be constructed. Each check dam will consist of stone and geotextile, placed across the existing ditch (perpendicular to the direction

of flow), as shown in Figure 2. The end of the check dam will begin at the ballast for the abandoned railroad track and will extend away from the tracks in both directions, across the drainage ditch and railroad track, as shown in Figure 3. The check dam will extend a minimum distance of 10 feet beyond the centerline of the ditch on either side. The check dam will be slightly concave, with the center of the check dam approximately 2 feet further down stream than the ends. The center of the check dam will have a height equal to the top of the existing rail or 2 feet (whichever is lower). This will provide an effective means to intercept, detain, and control runoff which will prevent sediment from leaving the site.

Specifications for the stone and geotextile filter fabric to be utilized are attached. Construction will be performed under the observation of a representative from AGC. The Contractor will submit manufacturer's information and materials gradation demonstrating that the material meets these specifications or are suitable alternates as determined by AGC. The implementation of this work plan will ultimately be dictated by actual physical features in the field.

1.2 SILT FENCE

Silt fence will be placed at the locations shown in Figure 1. The silt fence will be installed as shown. The silt fence will be installed according to the specifications and to the dimensions shown on Figure 4. Silt fence will remain in-place until disturbed areas have been re-stabilized with vegetation that will be seeded by the Contractor following completion of check dam construction.

1.3 PERMITS AND APPROVALS

Implementation of the proposed interim measures may require the attainment of several permits and/or approvals. Because the check dams will be constructed across and adjacent to the railroad spur, it will be necessary to determine ownership of the spur and whether any railroad permits need to be acquired prior to initiation of the work. At the present time it appears that RMC is the owner of the spur and, as such, no special permission will be required; however, this remains to be confirmed.

The proposed activities are expected to consist solely of the placement of the proposed check dams on top of the existing ground surface following clearing of trees, brush and debris. Therefore, no disturbance of the ground surface is expected and, as such, the proposed measures are not expected to be subject to the provisions of the Indiana Department of Natural Resources (IDNR) Rule 5 Requirements (General Permit for Construction Activity Storm Water Runoff Control). However, following approval of the Interim Measures Work Plan and prior to implementation, IDNR and the City of Beech Grove should be contacted to confirm that no approvals are necessary.

2.0 SPECIFICATIONS

2.1 ROCK FILTER SPECIFICATIONS

Four rock filters shall be placed in the designated areas shown on Figure 1. The rock filters shall be constructed according to the specifications shown in the detail presented in Figure 1 and according to the following specifications.

- The filter shall be equal in height to ½ the total depth of the channel with a 6" depression in the center.
- The rock filter shall be constructed of a stone with a d_{50} of 3 inches. A 1-foot thick layer of AASHTO #57 stone shall be placed on the upstream side of the filter.
- A geotextile, as shown in Figure 2 and specified in the Geotextile Specifications, shall be placed under the AASHTO #57 stone.
- Rock filters shall be inspected weekly and after each runoff event.
- Clogged filter stone (AASHTO #57) shall be replaced.
- Needed repairs shall be initiated immediately after the inspection.

2.2 GEOTEXTILE SPECIFICATIONS

The geotextile shall consist of long chain polymeric filaments or yarns such as polyethylene, polyamide, polyvinyledene-chloride, polypropylene, or polyester formed into a stable network so that the filaments or yarns retain their relative position to each other. During periods of shipment and storage, the fabric shall be protected from direct sunlight, ultra-violet rays, temperatures greater than 140F, mud, dirt, dust, and debris. The rolled fabric shall be wrapped in a heavy duty covering or shield from direct sunlight. The geotextile shall conform to the requirements shown in Table 1.

TABLE 1
Physical Requirements[1]
For Geotextile

Property	Test Method	Wire Fence Supported Requirements
Grab Tensile Strength, lbs.	ASTM D1682 (1")	120 minimum[2]
Grab Tensile Elongation, %	ASTM D1682	15
Retention Efficiency, %	VTM-51[3]	75
Slurry Flow Rate, gal/min/ft	VTM-51[3]	0.3
Ultraviolet[4] Degradation	ASTM D1682	Minimum 70% strength retained

NOTES:

1. Geotextile physical properties and a letter from the supplier certifying that its geotextile meets specification requirements shall be submitted to the Field Engineer.
2. Minimum - Use value in weaker principal direction. All numerical values represent minimum average roll value (i.e., test results from any sampled roll in a lot shall meet or exceed the minimum values in the table).
3. Virginia D.O.T. Test Method.
4. Strength retained after 500 hours of Xenon or Atlas Twin Arc Weather-o-meter.

2.3 SILT FENCE SPECIFICATIONS

Silt Fence shall be placed downgradient from the disturbed areas as shown on Figure 1. The silt fence shall be used to filter storm water from the areas requiring check dams. The silt fence geotextile shall be woven and conform to the requirements shown in Table 1 of the Geotextile Specifications. The installation of the silt fence shall conform to the following:

- Silt fence shall be installed at level grade. Both ends of each fence section shall be extended at least 8 feet upslope at 45 degrees to the main fence alignment to allow for pooling of water.

- A 6" deep trench shall be excavated, minimizing the disturbance on the downslope side. The bottom of the trench should be at level grade.

- Support stakes shall be driven 18" below the existing ground surface at 8 foot (max.) intervals.

- Filter fabric shall be stretched and fastened to the upslope side of the support stakes. At fabric ends, both ends should be wrapped around the support stake and stapled. If the fabric comes already attached to the stakes, the end stakes should be held together while the fabric is wrapped around the stakes at least one revolution prior to driving the stakes.

- The bottom of the fence should be anchored by placing the fabric in the bottom of the trench, and backfilling and compacting the fill material in the trench.

- The silt fence shall be inspected weekly and after each runoff event. Needed repairs should be initiated immediately after the inspection.

FIGURES

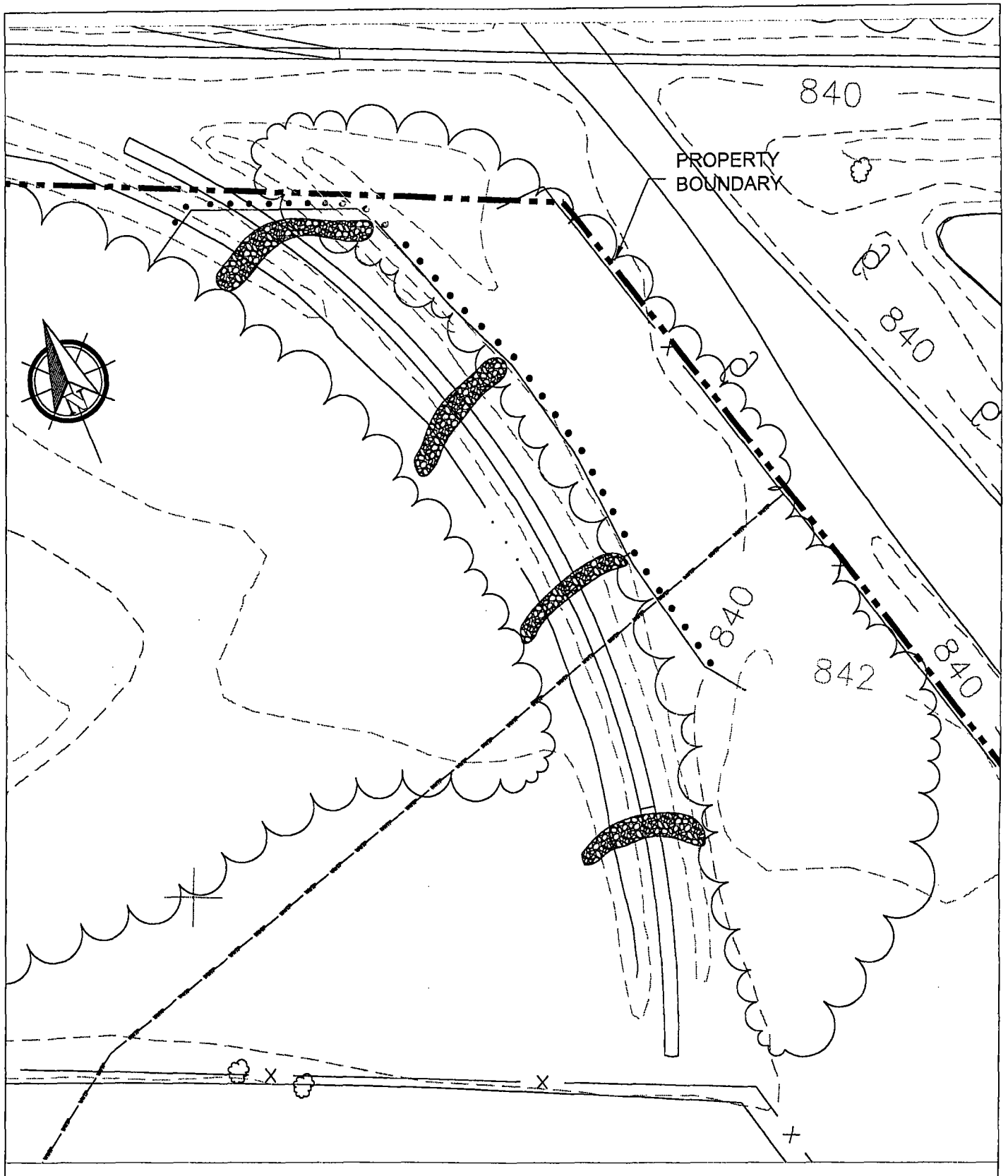

LEGEND

PROPOSED CHECK DAM

PROPOSED SILT FENCE

REFINED METALS CORPORATION

INSTALLATION OF INTERIM MEASURES

BEECH GROVE, IN

Scale: 1"=60'	PROPOSED CHECK DAM LOCATIONS
Originated By:	
Drawn By: P.S.G.	
Checked By: PJC	Advanced GeoServices Corp. Chadds Ford Business Campus, Rts. 202 & 1 Brandywine One, Suite 202 Chadds Ford, Pennsylvania 19317
Project Mgr: P.G.S.	
Dwg No. 98478-17	
Issued:	Project No. 98-478-03 — FIGURE: 1

J:\REFINED METALS\DRAWINGS\98-478-03\98478-17

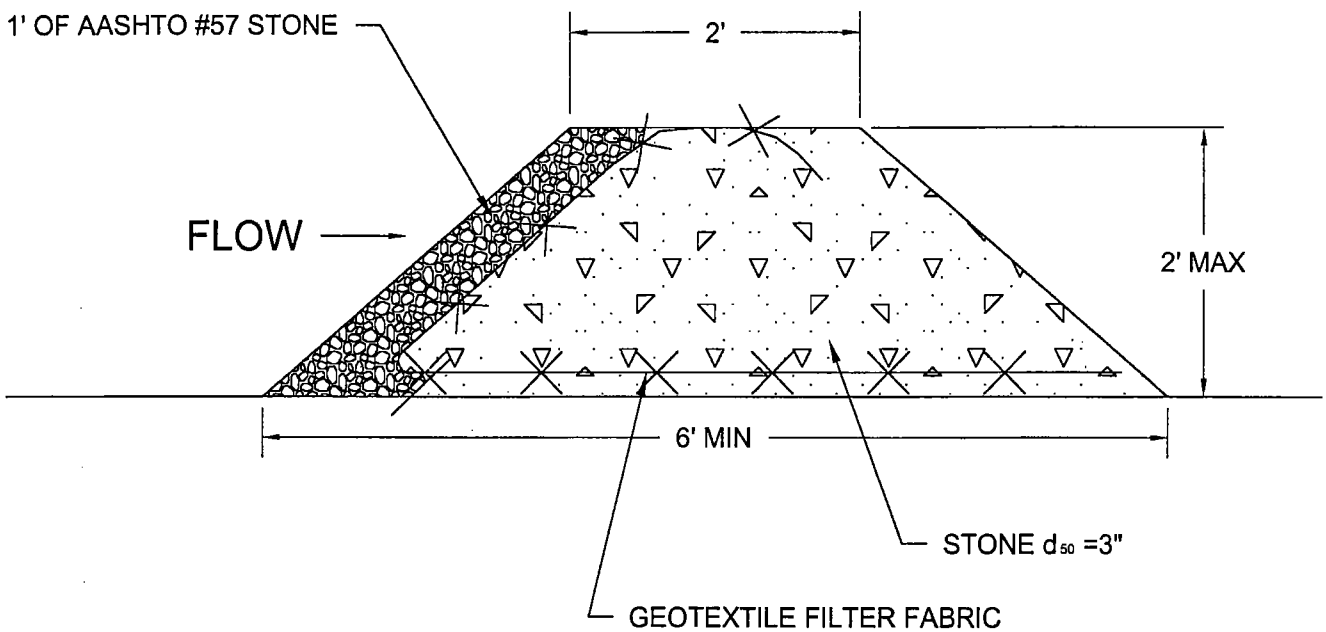

REFINED METALS CORPORATION

INSTALLATION OF INTERIM MEASURES

BEECH GROVE, IN

Scale: N.T.S.	CHECK DAM DETAIL
Originated By:	
Drawn By: P.S.G.	
Checked By: PSC	Advanced GeoServices Corp. Chadds Ford Business Campus, Rts. 202 & 1 Brandywine One, Suite 202 Chadds Ford, Pennsylvania 19317
Project Mgr: P.G.S.	
Dwg No. 98478-17	
Issued:	Project No. 98-478-03 — FIGURE: 2

J:\REFINED METALS\DRAWINGS\98-478-03\98478-17

ADVANCED GEOSERVICES CORP.

"Engineering for the Environment"™

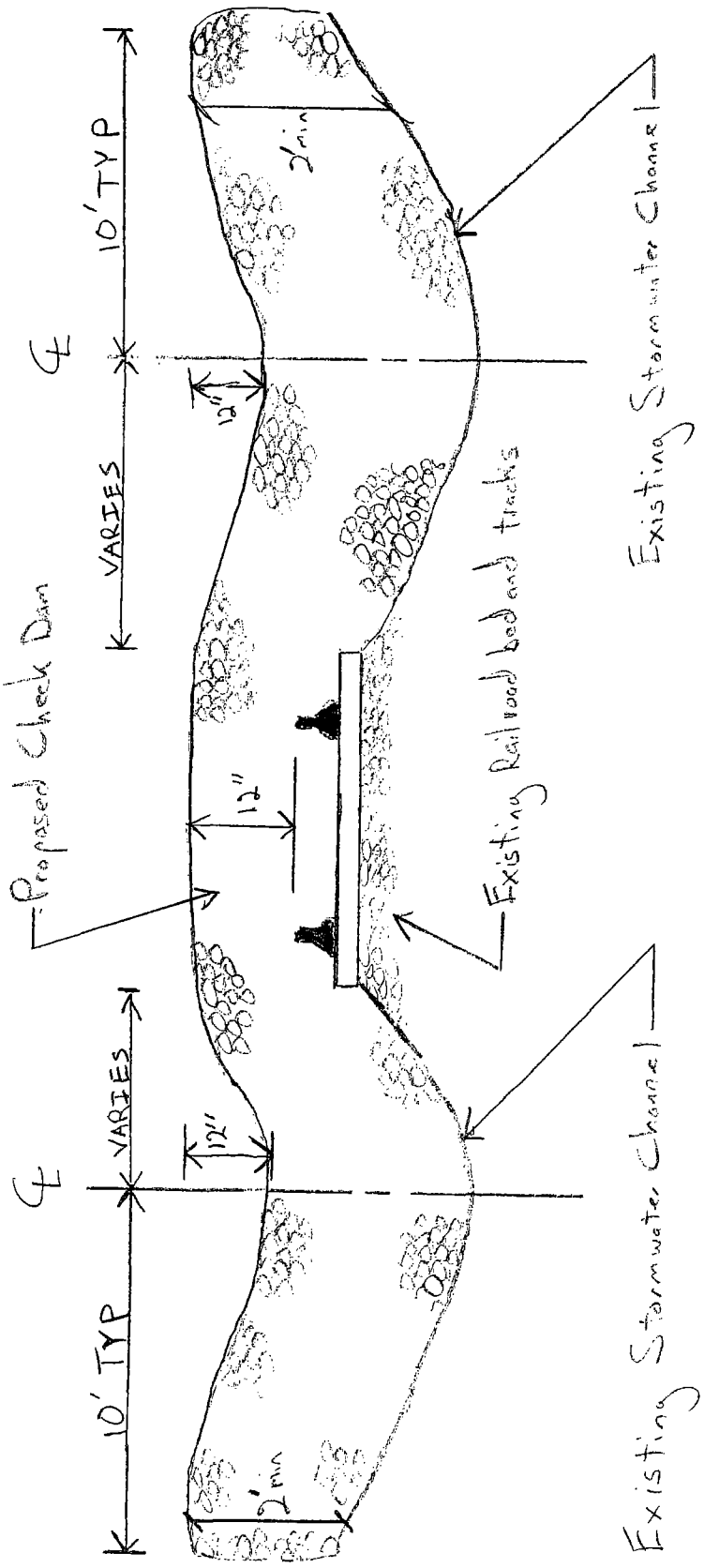

PROPOSED CHECK DAM CROSS SECTION

N.T.S.

Figure 3

SHEET 1 OF 1	PROJECT NO.	PROJECT NAME RMC	
BY PJC	DATE 12/19/00	DESCRIPTION Check Dam	
CHK. BY PGS	DATE 12/20/00		

FIGURE 3

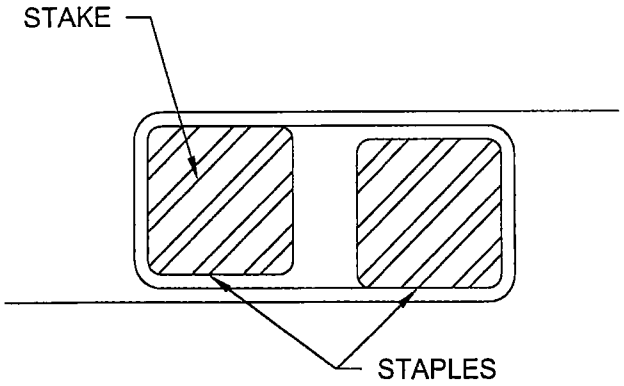

JOINING FENCE SECTIONS

NOTES:

STAKES SPACED @ 8' MAXIMUM. USE 2" x 2" WOOD OR EQUIVALENT STEEL STAKES.

FILTER FABRIC FENCE MUST BE PLACED AT LEVEL EXISTING GRADE. BOTH ENDS OF THE BARRIER MUST BE EXTENDED AT LEAST 8 FEET UP SLOPE AT 45° TO THE MAIN BARRIER ALIGNMENT.

SEDIMENT MUST BE REMOVED WHEN ACCUMULATIONS REACH 1/2 THE ABOVE GROUND HEIGHT OF THE FENCE.

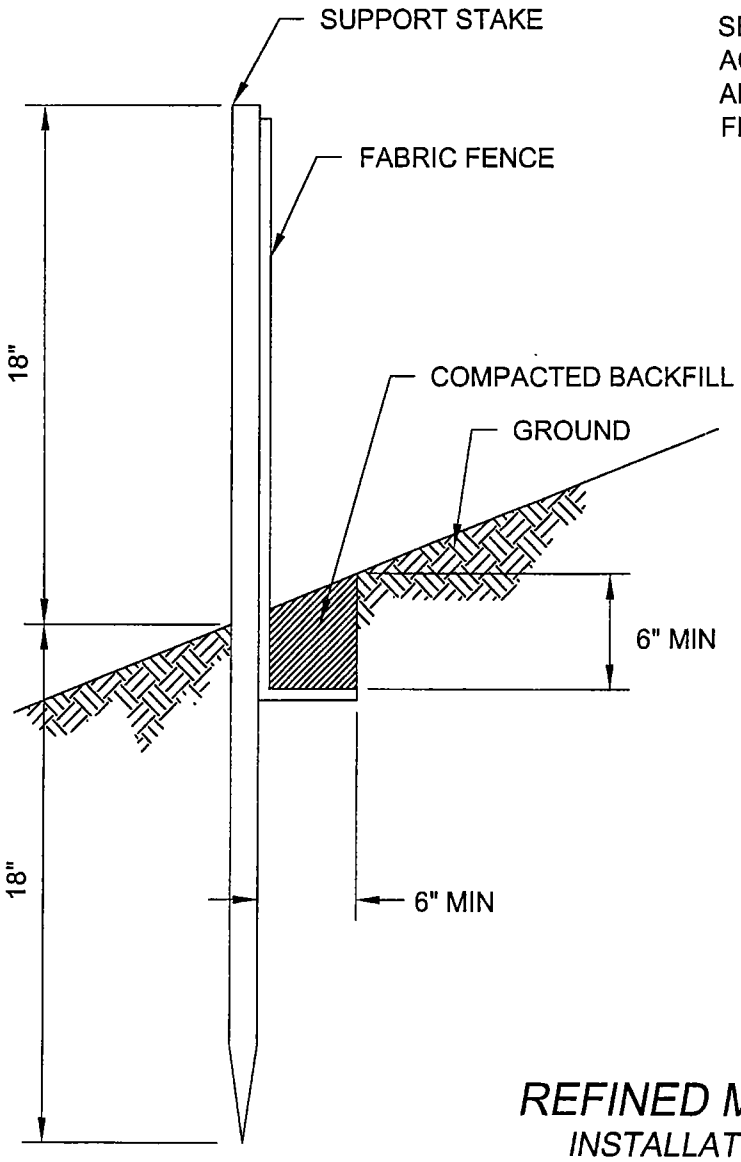

REFINED METALS CORPORATION

INSTALLATION OF INTERIM MEASURES

BEECH GROVE, IN

Scale: N.T.S.	SILT FENCE DETAIL
Originated By:	
Drawn By: P.S.G.	
Checked By: PSC	Advanced GeoServices Corp. Chadds Ford Business Campus, Rts. 202 & 1 Brandywine One, Suite 202 Chadds Ford, Pennsylvania 19317
Project Mgr: P.G.S.	
Dwg No. 98478-17	Project No. 98-478-03
Issued:	FIGURE: 4

J:\REFINED METALS\DRAWINGS\98-478-03\98478-17

WORK PLAN
FOR
INSTALLATION OF INTERIM MEASURES
AT THE
REFINED METALS CORPORATION FACILITY
BEECH GROVE, INDIANA

Prepared For:

REFINED METALS CORPORATION
Reading, Pennsylvania

Prepared By:

ADVANCED GEOSERVICES CORP.
Chadds Ford, Pennsylvania

Project No. 98-478-04
December 20, 2000

WORK PLAN
FOR
INSTALLATION OF INTERIM MEASURES
AT THE
REFINED METALS CORPORATION FACILITY
BEECH GROVE, INDIANA

Prepared For:

REFINED METALS CORPORATION
Reading, Pennsylvania

Prepared By:

ADVANCED GEOSERVICES CORP.
Chadds Ford, Pennsylvania

Project No. 98-478-04
December 20, 2000

PAUL G. STRATMAN
REGISTERED
No. 9400366
STATE OF INDIANA
PROFESSIONAL ENGINEER

Paul G. Stratman, P.E.
Senior Project Engineer

EXIDE CORPORATION

December 20, 2000

United States Environmental
Protection Agency – Region V
RCRA Enforcement Branch
77 W. Jackson Street, Hre-8J
Chicago, IL 60604-3590
Attn: Mr. Jonathan Adenuga

Re: Work Plan for Installation of Interim Measures
Refined Metals Corporation
Beech Grove, Indiana

Dear Mr. Adenuga:

Pursuant to your request, enclosed is the Work Plan for Installation of Interim Measures for the subject facility. I certify under penalty of perjury that the information contained in or accompanying this Work Plan for Installation of Interim Measures is, to the best of my knowledge after thorough investigation, true, accurate, and complete. I am aware that there are significant penalties for submitting false information, including the possibility of fine and imprisonment for knowing violations.

Sincerely,

EXIDE TECHNOLOGIES

Matthew A. Love
Director, Environmental Affairs

Enclosure

cc: Rebecca Joniskan – IDEM (w. encl.)

P.O. Box 14205 • Reading, PA 19612-4205
645 Penn Street • Reading, PA 19601
(610) 378-0500
www.exideworld.com

TABLE OF CONTENTS

PAGE NO.

1.0 Background 1

1.1 Check Dams 1
1.2 Silt Fence 2
1.3 Permits and Approvals 2

2.0 Specifications 4

2.1 Rock Filter Specifications 4
2.2 Geotextile Specifications 4
2.3 Silt Fence Specifications 5

LIST OF TABLES

TABLE

1 Physical Requirements for Geotextile

LIST OF FIGURES

FIGURE

1 Proposed Check Dam Locations
2 Check Dam Detail
3 Proposed Check Dam Cross Section
4 Silt Fence Detail

1.0 BACKGROUND

Pursuant to comments from the United States Environmental Protection Agency (USEPA) on the RCRA Facility Investigation Report (Revision 1.0) for the Refined Metals Corporation (RMC) facility in Beech Grove, Indiana, RMC submits this Interim Measures Work Plan. This plan has been prepared by Advanced GeoServices Corp. (AGC), on behalf of RMC, to address concerns raised by USEPA in their November 29, 2000 comment letter related to the potential for lead-containing sediments to be eroded from the drainage ditch along the railroad track at the north end of the site and subsequently transported off-site.

The Interim Measures proposed consist of the construction of stone check dams periodically along the alignment of the ditch. The check dams will effectively retain surface water runoff which reduces velocity (and therefore reduces the energy necessary to cause erosion), and encourages deposition of suspended solids. This solution was developed based on consideration of the very flat topographic conditions, relatively small contributing drainage area, pervious cover of brush and trees, field observations that no significant scouring or erosion are currently occurring in the ditch, and conversations with the USEPA Project Manager.

It is recognized that these measures are only intended to service as a temporary solution and that excavation and removal within the ditch will ultimately be required. The use of the temporary measures will allow lead-impacted sediments to remain in place until site contamination is fully delineated and an all-encompassing approach to corrective action can be developed and implemented.

1.1 CHECK DAMS

As described above, the proposed Interim Measures will consist of constructing check dams along the alignment of the existing drainage ditch (on both sides of the railroad track) at the locations shown on the attached Figure 1. A total of four check dams will be constructed. Each check dam will consist of stone and geotextile, placed across the existing ditch (perpendicular to the direction

of flow), as shown in Figure 2. The end of the check dam will begin at the ballast for the abandoned railroad track and will extend away from the tracks in both directions, across the drainage ditch and railroad track, as shown in Figure 3. The check dam will extend a minimum distance of 10 feet beyond the centerline of the ditch on either side. The check dam will be slightly concave, with the center of the check dam approximately 2 feet further down stream than the ends. The center of the check dam will have a height equal to the top of the existing rail or 2 feet (whichever is lower). This will provide an effective means to intercept, detain, and control runoff which will prevent sediment from leaving the site.

Specifications for the stone and geotextile filter fabric to be utilized are attached. Construction will be performed under the observation of a representative from AGC. The Contractor will submit manufacturer's information and materials gradation demonstrating that the material meets these specifications or are suitable alternates as determined by AGC. The implementation of this work plan will ultimately be dictated by actual physical features in the field.

1.2 SILT FENCE

Silt fence will be placed at the locations shown in Figure 1. The silt fence will be installed as shown. The silt fence will be installed according to the specifications and to the dimensions shown on Figure 4. Silt fence will remain in-place until disturbed areas have been re-stabilized with vegetation that will be seeded by the Contractor following completion of check dam construction.

1.3 PERMITS AND APPROVALS

Implementation of the proposed interim measures may require the attainment of several permits and/or approvals. Because the check dams will be constructed across and adjacent to the railroad spur, it will be necessary to determine ownership of the spur and whether any railroad permits need to be acquired prior to initiation of the work. At the present time it appears that RMC is the owner of the spur and, as such, no special permission will be required; however, this remains to be confirmed.

The proposed activities are expected to consist solely of the placement of the proposed check dams on top of the existing ground surface following clearing of trees, brush and debris. Therefore, no disturbance of the ground surface is expected and, as such, the proposed measures are not expected to be subject to the provisions of the Indiana Department of Natural Resources (IDNR) Rule 5 Requirements (General Permit for Construction Activity Storm Water Runoff Control). However, following approval of the Interim Measures Work Plan and prior to implementation, IDNR and the City of Beech Grove should be contacted to confirm that no approvals are necessary.

2.0 SPECIFICATIONS

2.1 ROCK FILTER SPECIFICATIONS

Four rock filters shall be placed in the designated areas shown on Figure 1. The rock filters shall be constructed according to the specifications shown in the detail presented in Figure 1 and according to the following specifications.

- The filter shall be equal in height to ½ the total depth of the channel with a 6" depression in the center.
- The rock filter shall be constructed of a stone with a d_{50} of 3 inches. A 1-foot thick layer of AASHTO #57 stone shall be placed on the upstream side of the filter.
- A geotextile, as shown in Figure 2 and specified in the Geotextile Specifications, shall be placed under the AASHTO #57 stone.
- Rock filters shall be inspected weekly and after each runoff event.
- Clogged filter stone (AASHTO #57) shall be replaced.
- Needed repairs shall be initiated immediately after the inspection.

2.2 GEOTEXTILE SPECIFICATIONS

The geotextile shall consist of long chain polymeric filaments or yarns such as polyethylene, polyamide, polyvinyledene-chloride, polypropylene, or polyester formed into a stable network so that the filaments or yarns retain their relative position to each other. During periods of shipment and storage, the fabric shall be protected from direct sunlight, ultra-violet rays, temperatures greater than 140F, mud, dirt, dust, and debris. The rolled fabric shall be wrapped in a heavy duty covering or shield from direct sunlight. The geotextile shall conform to the requirements shown in Table 1.

TABLE 1
Physical Requirements[1]
For Geotextile

Property	Test Method	Wire Fence Supported Requirements
Grab Tensile Strength, lbs.	ASTM D1682 (1")	120 minimum[2]
Grab Tensile Elongation, %	ASTM D1682	15
Retention Efficiency, %	VTM-51[3]	75
Slurry Flow Rate, gal/min/ft	VTM-51[3]	0.3
Ultraviolet[4] Degradation	ASTM D1682	Minimum 70% strength retained

NOTES:

1. Geotextile physical properties and a letter from the supplier certifying that its geotextile meets specification requirements shall be submitted to the Field Engineer.
2. Minimum - Use value in weaker principal direction. All numerical values represent minimum average roll value (i.e., test results from any sampled roll in a lot shall meet or exceed the minimum values in the table).
3. Virginia D.O.T. Test Method.
4. Strength retained after 500 hours of Xenon or Atlas Twin Arc Weather-o-meter.

2.3 SILT FENCE SPECIFICATIONS

Silt Fence shall be placed downgradient from the disturbed areas as shown on Figure 1. The silt fence shall be used to filter storm water from the areas requiring check dams. The silt fence geotextile shall be woven and conform to the requirements shown in Table 1 of the Geotextile Specifications. The installation of the silt fence shall conform to the following:

- Silt fence shall be installed at level grade. Both ends of each fence section shall be extended at least 8 feet upslope at 45 degrees to the main fence alignment to allow for pooling of water.

- A 6" deep trench shall be excavated, minimizing the disturbance on the downslope side. The bottom of the trench should be at level grade.

- Support stakes shall be driven 18" below the existing ground surface at 8 foot (max.) intervals.

- Filter fabric shall be stretched and fastened to the upslope side of the support stakes. At fabric ends, both ends should be wrapped around the support stake and stapled. If the fabric comes already attached to the stakes, the end stakes should be held together while the fabric is wrapped around the stakes at least one revolution prior to driving the stakes.

- The bottom of the fence should be anchored by placing the fabric in the bottom of the trench, and backfilling and compacting the fill material in the trench.

- The silt fence shall be inspected weekly and after each runoff event. Needed repairs should be initiated immediately after the inspection.

FIGURES

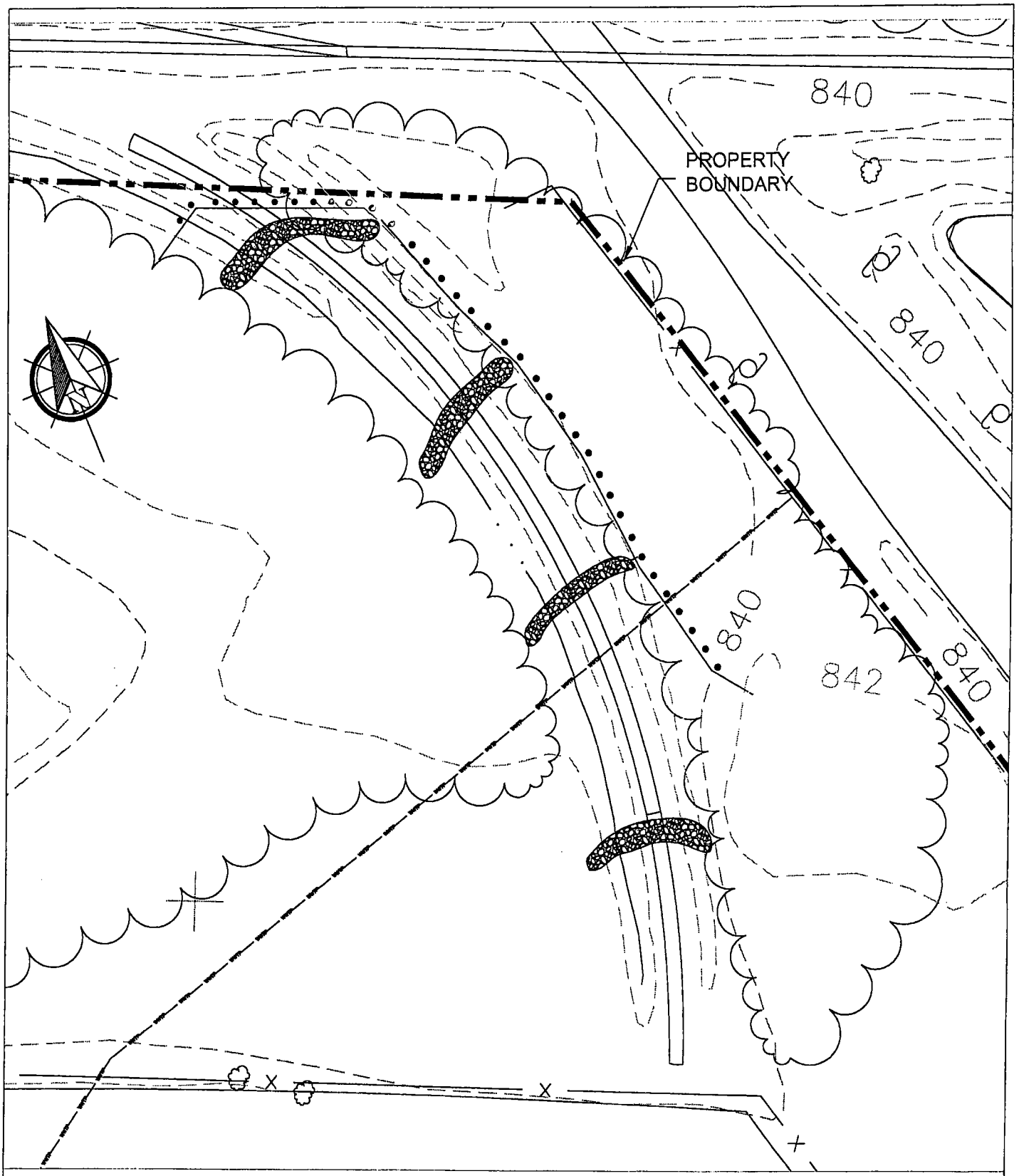

LEGEND

PROPOSED CHECK DAM

PROPOSED SILT FENCE

REFINED METALS CORPORATION

INSTALLATION OF INTERIM MEASURES

BEECH GROVE, IN

Scale: 1"=60'	PROPOSED CHECK DAM LOCATIONS
Originated By:	
Drawn By: P.S.G.	
Checked By: PSC	Advanced GeoServices Corp. Chadds Ford Business Campus, Rts. 202 & 1 Brandywine One, Suite 202 Chadds Ford, Pennsylvania 19317
Project Mgr: P.G.S.	
Dwg No. 98478-17	
Issued:	Project No. 98-478-03 — FIGURE: 1

J:\REFINED METALS\DRAWINGS\98-478-03\98478-17

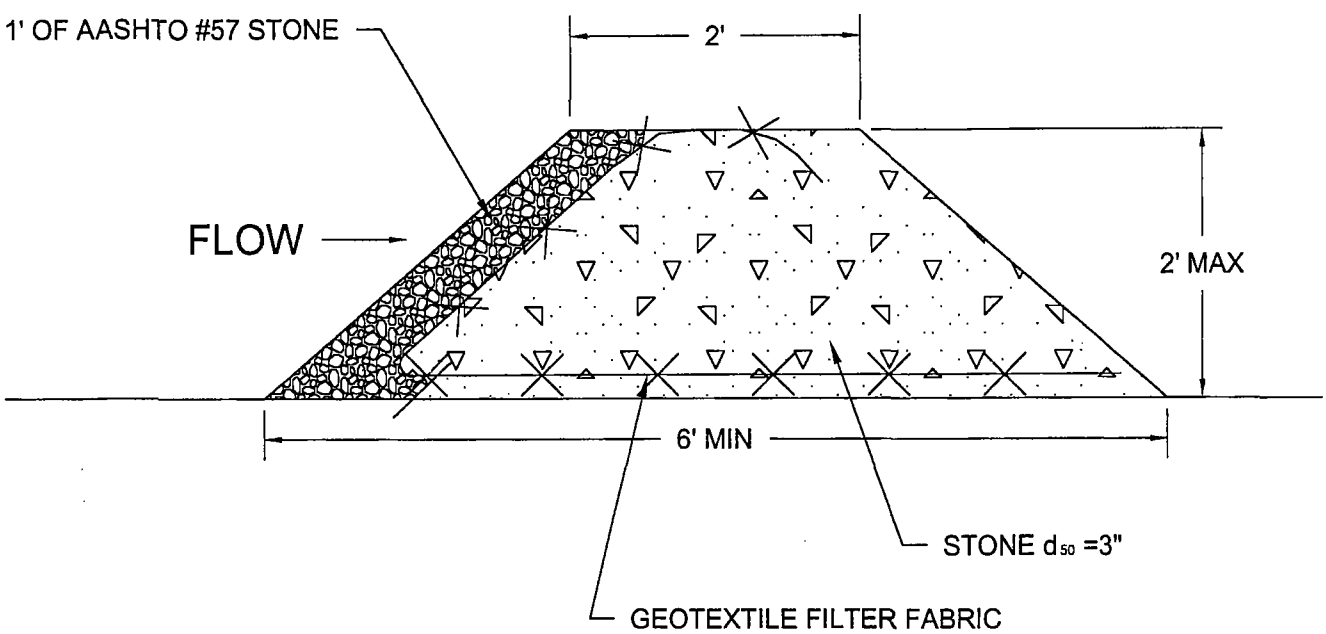

REFINED METALS CORPORATION

INSTALLATION OF INTERIM MEASURES

BEECH GROVE, IN

Scale: N.T.S.	CHECK DAM DETAIL
Originated By:	
Drawn By: P.S.G.	Advanced GeoServices Corp. Chadds Ford Business Campus, Rts. 202 & 1 Brandywine One, Suite 202 Chadds Ford, Pennsylvania 19317
Checked By: PSL	
Project Mgr: P.G.S.	
Dwg No. 98478-17	Project No. 98-478-03
Issued:	FIGURE: 2

J:\REFINED METALS\DRAWINGS\98-478-03\98478-17

ADVANCED GEOSERVICES CORP.

"Engineering for the Environment"™

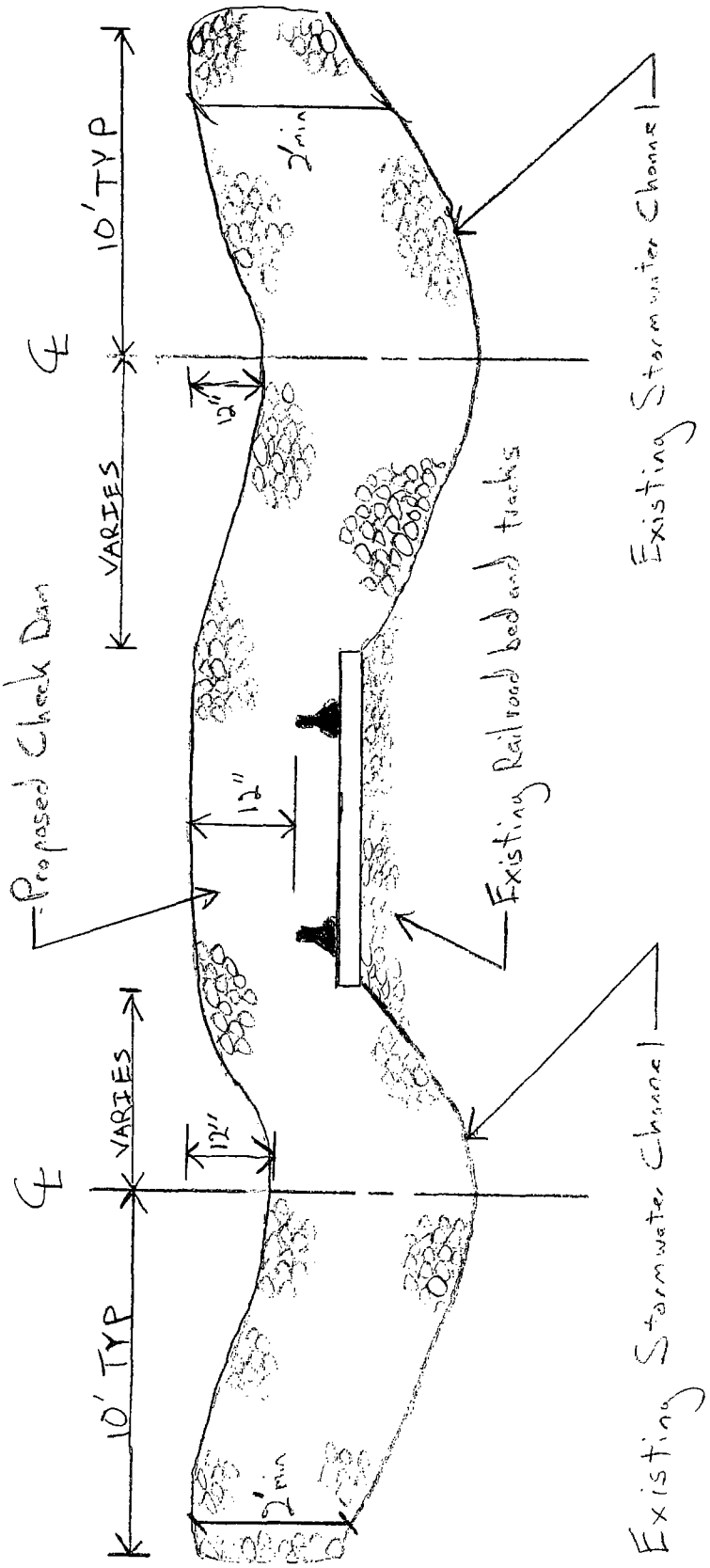

PROPOSED CHECK DAM CROSS SECTION

N.T.S.

Figure 3

SHEET 1 OF 1	PROJECT NO.	PROJECT NAME RMC	
BY PJC	DATE 12/19/00	DESCRIPTION Check Dam	
CHK. BY PGS	DATE 12/20/00		

FIGURE 3

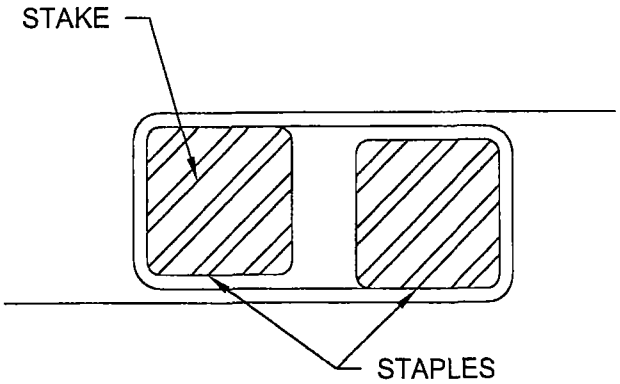

JOINING FENCE SECTIONS

NOTES:

STAKES SPACED @ 8' MAXIMUM. USE 2" x 2" WOOD OR EQUIVALENT STEEL STAKES.

FILTER FABRIC FENCE MUST BE PLACED AT LEVEL EXISTING GRADE. BOTH ENDS OF THE BARRIER MUST BE EXTENDED AT LEAST 8 FEET UP SLOPE AT 45° TO THE MAIN BARRIER ALIGNMENT.

SEDIMENT MUST BE REMOVED WHEN ACCUMULATIONS REACH 1/2 THE ABOVE GROUND HEIGHT OF THE FENCE.

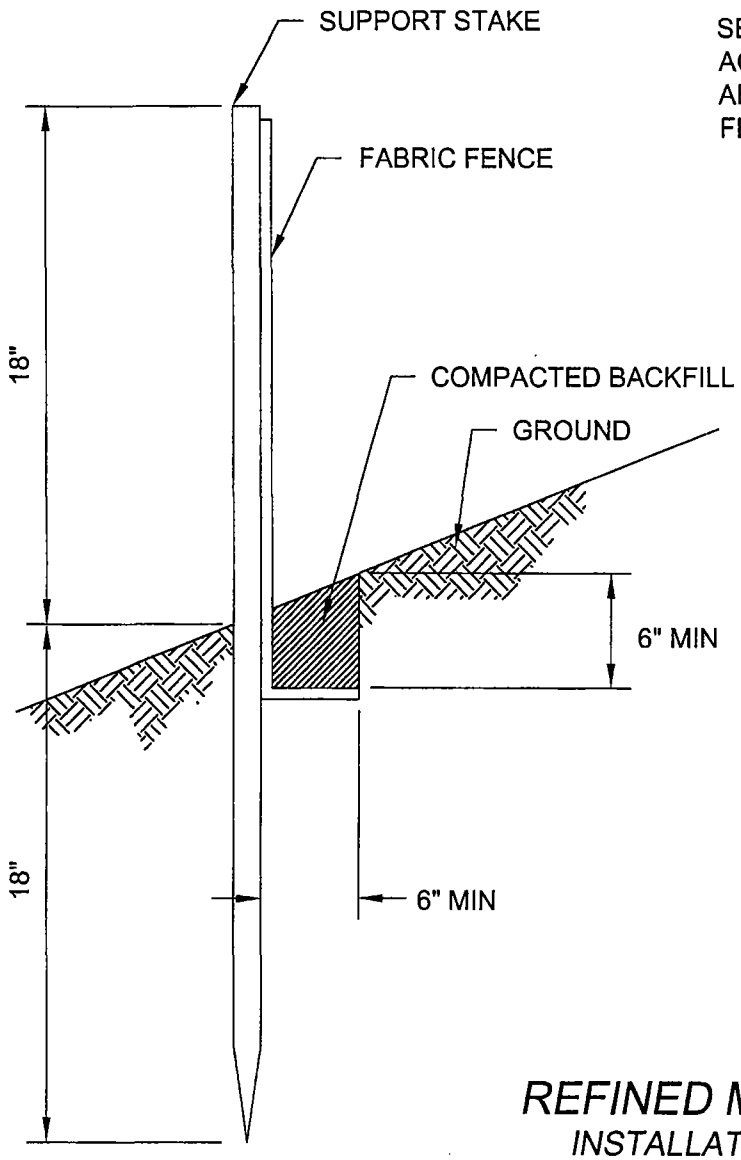

REFINED METALS CORPORATION

INSTALLATION OF INTERIM MEASURES

BEECH GROVE, IN

Scale: N.T.S.	SILT FENCE DETAIL
Originated By:	
Drawn By: P.S.G.	Advanced GeoServices Corp. Chadds Ford Business Campus, Rts. 202 & 1 Brandywine One, Suite 202 Chadds Ford, Pennsylvania 19317
Checked By: PSC	
Project Mgr: P.G.S.	
Dwg No. 98478-17	
Issued:	Project No. 98-478-03 — FIGURE: 4

J:\REFINED METALS\DRAWINGS\98-478-03\98478-17

PHASE II RCRA FACILITY INVESTIGATION WORK PLAN

Prepared For:

REFINED METALS CORPORATION
Beech Grove, Indiana
EPA ID ID000718130

Prepared By:

ADVANCED GEOSERVICES CORP.
Chadds Ford, Pennsylvania

Project No. 98-478-04
December 20, 2000

TABLE OF CONTENTS

PAGE NO.

1.0 Phase II RFI Work Plan 1

1.1 General Site Description 1
1.2 Proposed Scope of Work 2

2.0 Site Setting 3

2.1 Physical Setting 3
2.2 Regional Geology 3
2.3 Regional Hydrogeology 4
2.4 Site Specific Geology 5
2.5 Site Specific Hydrogeology 6

3.0 Proposed Scope of Work 8

3.1 Focus of the Investigation 8
3.2 Groundwater Evaluation 8

3.2.1 Groundwater Flow 8
3.2.2 Groundwater Quality 11

3.2.2.1 Well Development 11
3.2.2.2 Purging 11
3.2.2.3 Groundwater Sampling 12

3.3 Soil Sampling 12
3.4 Sediment Sampling 13

4.0 Ancillary Plans and Schedule 14

4.1 Project Management Plan 14
4.2 Project Quality Assurance 15
4.3 Health and Safety Plan 16
4.4 Community Relations Plan 16
4.5 Schedule 17

5.0 References 18

LIST OF TABLES

TABLE

3-3 Sampling and Analysis Program Summary - Phase II

LIST OF FIGURES

FIGURE

1-1 Site Location Map
3-1 Proposed and Existing Site Well Locations
3-2 Off-Site Soil Sampling Grid
4-1 Anticipated Project Schedule

1.0 PHASE II RFI WORK PLAN

1.1 GENERAL SITE DESCRIPTION

The Refined Metals Corporation (RMC) facility in Beech Grove, Indiana (Site) was the location of secondary lead smelting operations from 1968 through 1995. The location of the Site is shown on Figure 1-1. The Site ceased normal operations on December 31, 1995. The Site, as shown on Figure 1-1, covers approximately 24 acres which includes approximately 10 acres where smelting operations occurred. The remainder of the Site consists of areas of lawn and woods. The former smelter area contains several structures identified as the Battery Breaker, Material Storage and Furnace, Refining, Waste Water Treatment/Filter Press, and Office Buildings. Other small structures exist including a vehicle maintenance building, baghouses, and pump shed.

At this time, the Site is idle except for the waste water treatment system which remains in operation. The waste water treatment system remains in-place to treat storm water collected at the facility. For further descriptions of the facility and operational history please refer to Section 2.0 of RFI Work Plan Version 2.0 dated March 3, 1999 (Phase I RFI Work Plan).

The Phase I RFI Work Plan was developed in 1999, with the intent to utilize the existing information and collect additional information necessary to determine the presence, magnitude, extent and mobility of hazardous waste and hazardous waste constituents on and beneath the former site area and adjacent off-site areas that may have originated from the RCRA permitted hazardous waste or solid waste management units at the Site. The Phase I RFI Work Plan included information such as facility background, geologic setting and ecological setting, proposed investigatory activities and sampling techniques. Following implementation of the Phase I RFI Work Plan, a RCRA Facility Investigation Report (Phase I RFI Report) was submitted to the US EPA which outlined the site specific hydrogeology, geology, methods and procedures used during the investigation and results of the investigation.

The objective of the Phase II hydrogeologic and soil sampling is to collect the additional information recommended in the Phase I RFI Report and further evaluate the existing surface and subsurface conditions. This work plan is organized into two primary sections: one for supplemental groundwater evaluation, and one for supplemental sediment evaluation in the on-site and off-site surface runoff ditches and off-site soil sampling.

1.2 PROPOSED SCOPE OF WORK

The proposed scope of work for the Phase II RFI has been developed based on previous results and comments issued from the US EPA. Sampling activities have been developed under three main tasks which are listed below:

- Further evaluate groundwater flow and quality conditions.
- Characterize the soil metal concentrations to the north and west of the site (off-site).
- Characterize the sediment metal concentrations of the on-site and off-site drainage ditches.

Field activities will include the collection of soil samples, well installation, well development, groundwater sampling, and soil/sediment sampling. Many of the procedures for the field activities reference the Phase I RFI Work Plan.

2.0 SITE SETTING

2.1 PHYSICAL SETTING

The site is located in the White River Drainage Basin. The site is situated on a minor local topographic high with a surface elevation of approximately 845 feet mean sea level (msl). The surface elevation slopes gently to the southeast toward Sloan Ditch, and the northwestern perimeter of the site slopes to the northwest toward the intermittent headwaters of Beech Creek. Surface water at the site is collected in the stormwater management basin and is treated and discharged to the municipal sewer system.

Prior to construction of the present-day stormwater collection and control system, surface water from the northern portion of the facility flowed to the intermittent stream that flows northwest to the headwaters of Beech Creek. Surface water from other areas on the site historically flowed to the same location as the present-day (geomembrane lined) stormwater basin, which was reportedly concrete lined. Water collected in this impoundment either evaporated, or when full, overflowed the banks to a drainage ditch that flowed off-site to the east and then to the south, eventually discharging to Sloan Ditch. Sloan Ditch flows 0.6 mile west-southwest to Churchman Creek, which flows to the west 0.9 mile and discharges to Beech Creek. Beech Creek flows 1.2 miles to the southwest to Lick Creek, which then flows 7 miles to the White River.

2.2 REGIONAL GEOLOGY

The surficial geology of Marion County is glacial till (Tipton Till Plain) consisting of yellowish-gray, bluish-gray, or gray sand or silt with some clay and pebbles and scattered cobbles and boulders. The drift cover in Marion County is believed to be composed of three drift sheets resulting from the Kansan, Illinoian, and Wisconsin glaciations. Thicknesses range from less than 15 feet to greater than 400 feet of till. The site is underlain by approximately 200 feet of unconsolidated material.

Bedrock is encountered at an elevation of approximately 640 feet mean sea level (on the order of 200 feet bgs), and consists of middle Devonian-aged dolomitic limestones. The limestones consist primarily of the Geneva Dolomite and the Jefferson Limestone. The Geneva Dolomite is a light gray to tan and buff to chocolate brown dolomite that contains white crystalline calcite masses. The Jeffersonville Limestone is a pure limestone in the upper portion of the formation, and is laminated with organic material in the lower portion. The organic laminae are more argillaceous than the coralline zone (Harrison, 1963). Meyer, 1975 indicates that shale is present beneath the glacial till and overlying the limestones. Additional detail on the shale unit is not provided by Meyer. The regional dip is to the southwest so that progressively younger formations are encountered below the till plain to the southwest.

2.3 REGIONAL HYDROGEOLOGY

In Marion County, groundwater is encountered in unnamed sand and gravel beds overlying the bedrock, the Jefferson Limestone and Geneva Dolomite, and the Niagaran Limestones (Harrison, 1963). The sand and gravel glacial outwash that coincides with the courses of the White River and Fall Creek is the aquifer of greatest economic importance in Marion County. The location of this aquifer generally coincides with the glacial melt water and outwash deposits along the major streams. Fall Creek enters White River upstream of the site. The White River sand and gravel aquifer is located approximately 5.3 miles west of the site. The sand and gravel aquifer is unconfined and flows toward and discharges to the surface water bodies. The hydraulic conductivity was determined for sand, sand and gravel, and gravel by Meyer, 1975 and are as follows:

Sand	40 ft/day
Sand and Gravel	240 ft/day
Gravel	415 ft/day

The hydraulic conductivity of the silt and clay was determined to be too low for reporting purposes by Meyer. Specific capacity and lithologic information used in Meyer's hydraulic conductivity calculations of the sand and gravel glacial outwash deposits were obtained from drillers' records.

It is noted by Meyer that three thin, areally discontinuous, sheet-like deposits of sand and gravel in the till-plain area are separated by beds of silt and clay that cause the groundwater in these deposits to be semi-confined. Meyer also notes that large areas of silt and clay often separate one area of an aquifer from another. The elevation of the uppermost semi-confined aquifer beneath the Site was estimated to be approximately 720 ft msl (approximately 120 feet bgs) and is overlain by deposits of varying thickness of silt and clay. Groundwater flow in the uppermost regional semi-confined aquifer is to the northwest. The middle regional semi-confined aquifer was not mapped beneath the site because an aquitard (clay unit) is mapped in the area. The elevation of the lower regional semi-confined aquifer beneath the site is approximately 660 ft msl (180 ft bgs) and flow is reported to be towards the southeast.

The average daily industrial and municipal groundwater pumpage for Marion County is 28.95 million gallons per day (mgpd). Less than 20 percent of the industrial/municipal pumpage is from the bedrock. Also, less than 20 percent of the total pumpage is obtained outside the unconfined glacial-outwash aquifer which occurs only along the White River and Fall Creek and is located at least 5.3 miles west of the site. The major centers of groundwater pumpage occurred within approximately one mile of a major stream. The estimated total domestic groundwater pumpage is 9.0 to 11.0 mgpd (Meyer 1975).

2.4 SITE SPECIFIC GEOLOGY

Based on results of the Phase I RFI activities, the surficial geology at the site is consistent with the noted regional geology as described in the Phase II RFI Report Section 3.2. Four deep borings identified as MW-1D, MW-2D, MW-3D and MW-6D were advanced on-site to depths ranging from 110 feet to 130 feet bgs during the RFI to characterize subsurface conditions. Borings MW-2D and MW-6D were subsequently converted into monitoring wells. From these four borings it was determined that a substantial thickness of unconsolidated silt, clay and fine sands exist beneath the site. The thickness of the till plain beneath the site is at least 130 feet as bedrock was not encountered in any of the deep borings.

Various portions of the Site have been altered due to plant operation activities. Several topographic high mounds in the wooded area northeast of the manufacturing area and adjacent to the intermittent stream are believed to be fill material from construction activities on-site. Similarly, paved areas and areas below the structures on-site have been filled with gravel of thicknesses ranging from 6 to 12 inches.

2.5 SITE SPECIFIC HYDROGEOLOGY

Shallow groundwater encountered at the Site is believed to represent a local perched zone of saturation in sand layers within the glacial till. AGC reviewed the logs of the four deep borings advanced during the RFI and the five shallow boring logs advanced prior to installation of site monitoring wells MW-1 through MW-5 in 1991. The boring logs indicate that this sand layer varies in thickness and elevation throughout the site. The potentiometric surface for the groundwater on-site is approximately 10 feet bgs, and flow in the shallow on-site wells appears to be to the southeast. Boring logs for the deep borings on-site indicate that a substantial thickness of silt and clay is deposited below the shallow zone of saturation and overlies the regional uppermost semi-confined water bearing zone. The regional uppermost semi-confined aquifer was not encountered in any of the deep borings.

The deep wells completed on-site for the Phase I RFI (MW-2D and MW-6D) were set in a middle perched zone located 75 to 85 feet below grade. It should be noted that these borings were advanced to 110 and 123 feet below grade, respectively, and did not encounter the regional upper-most semi-confined aquifer. Groundwater sampling results for the middle perched zone indicated a total lead concentration over the 4 μg/L Region IX PRG screening level being utilized for groundwater in one sample, although that single result is associated with blank contamination for lead at a concentration that was greater than the concentration encountered. Arsenic was encountered in both wells during both rounds of sampling. Similar to the elevated levels of arsenic in soil in the region, it is believed that the concentrations encountered are representative of regional background levels and not impacts from former facility operations. This middle perched zone was not encountered throughout the entire site and is laterally discontinuous.

Monitoring wells were not installed at the middle perched zones at locations MW-1 and MW-3 due to the lack of water (boring logs were presented in Appendix A of the Phase I RFI Report). Substantial low permeability silty/clay to clayey silt was encountered at both locations. The boring log from location MW-1D indicated that the hole was dry to slightly moist to depths of 130 feet bgs. At location MW-1D the potential water bearing sand units were encountered at depths of 60 to 62 feet and 66 to 68 feet bgs and were noted to be either dry or only slightly moist. Thin dry to moist sand layers were also observed at monitoring well location MW-3 at depths of 60 to 64, 69 tp 70, and 127 to 130 feet bgs. The geologic conditions observed at locations MW-1 and MW-3 indicate that the middle perched zone does not exist and, therefore, the groundwater conditions were not investigated.

Monitoring well MW-4 existed at the site prior to the initiation of the RFI, and was incorporated into the groundwater monitoring sampling events that occurred in September 1999 and December 1999. Results of analysis indicates that lead was not detected at a concentration above the detection level, and the detection level did not exceed screening preliminary remediation goal (PRG) of 4 μg/L (Region 9) or the USEPA Safe Drinking Water (December 1999) action level of 15 μg/L. Based on the lack of detected concentrations of lead in the shallow well, MW-4, AGC believes that a deeper investigation at this location is unwarranted.

Due to the substantial layers of silt and clay, combined with the areal discontinuity of the regional uppermost semi-confined aquifer, it is believed that there is no direct hydraulic connection between the shallow and middle perched zones and the regional uppermost semi-confined aquifer. Based on the laterally discontinuous middle perched zone and lack of detected constituents of concern from this zone AGC believes that further deeper investigations at the Site are unwarranted.

3.0 PROPOSED SCOPE OF WORK

3.1 FOCUS OF THE INVESTIGATION

The proposed scope of work for the Phase II RFI at the Beech Grove facility has been developed to address specific recommendations from the Phase I RFI Report and US EPA comments. Sampling activities have been developed under three main tasks which are listed.

- Further evaluation of groundwater flow and quality conditions.
- Characterize the soil metal concentrations to the north and west of the Site.
- Characterize the sediment metal concentrations of the on-site and off-site drainage ditches.

3.2 GROUNDWATER EVALUATION

3.2.1 Groundwater Flow

Four deep borings were advanced at various locations at the site during the Phase I RFI to collect information regarding the subsurface geology and depth to the regional groundwater table. None of the deep borings encountered the semi-confined regional aquifer as described by Meyers (1975). Two of the deep borings encountered a middle perched zone. Consequently, monitoring wells were installed in only two of the deep borings to determine the effect, if any, that the RMC facility had upon the middle perched zone. These wells are shown on Figure 3-1. Water levels collected from the shallow wells during the Phase I RFI were used to construct a potentiometric surface map which indicated radial flow under the Site. Based on the evaluation of groundwater flow during the Phase I RFI, AGC recommended that the installation of two additional shallow groundwater wells:

- One well north of the paved facility area; and
- One background well.

Based on comments from the US EPA, AGC revised the recommendation to install three shallow monitoring wells at the site:

- Two shallow wells down gradient of the MW-2/MW-2D location, which would monitor the north portion of the paved facility area; and

- One shallow background well in the western corner of the site. This well will be placed in the least impacted surface soil location. AGC recognizes that this well will be considered a cross gradient well. No up-gradient, on-site wells can be installed on the true upgradient property boundary due to elevated soil lead concentrations in this area, and the existence of radial groundwater flow at the Site.

In addition, this work plan is proposing the installation of a fourth well as a replacement for MW-6S in the same general area of MW-6S. AGC has recommended to replace MW-6S for the following reasons:

- The well is screened in the upper confining layer (silt/clay) and, therefore, is not effectively monitoring the upper semi-confined aquifer.

- The well must be sampled with a bailer due to low recharge ratio (recharge is as low as 1-gallon in 24 hours). Therefore, only excessively turbid samples which are not indicative of actual groundwater conditions are obtained.

AGC recommends to install a shallow well near the existing MW-6S well and set the screen at an approximate depth of 31 feet bgs in a sand/silt unit that occurs from 24 to 31 feet bgs.

Proposed new well locations are presented on Figure 3-1.

The shallow wells will be installed using standard 8-inch ID hollow stem auger techniques in accordance with ASTM D 1586 to depths of approximately 30 to 40 feet below ground surface. Wells will be installed with logging, drilling, well development and decontamination procedures noted in the Phase I RFI Work Plan. Monitoring wells will be constructed of 4-inch, flush-threaded, Schedule 40 PVC riser with a 10-foot length of factory slotted 0.010-inch or 0.005-inch PVC well screen. Screen slot size will be determined by the field conditions. A sand pack will be placed around the screen to 2 feet above the top of the screen with Morie number 1 or 0 (or equivalent) sand pack. A minimum 2-foot thick bentonite seal will be placed on top of the sand pack and hydrated with potable water for approximately 15 minutes prior to the installation of the grout. The remaining annulus of each well will be tremi-grouted to the surface using a 95% Portland cement and bentonite (5-7%) mixture grout.

During collection of the soil samples for logging purposes, a maximum of two undisturbed samples from the upper clay/silt unit will be collected. The undisturbed soil samples will be collected using a Shelby tube following procedures outlined in ASTM 1587-94. The undisturbed samples will be collected to determine the vertical permeability following ASTM D-2434-68 for falling head permeability.

All newly installed wells will be surveyed by an Indiana-licensed surveyor. The top of the inner casing, top of the outer casing, and the ground surface at each well will be surveyed to 0.01 foot accuracy.

Prior to groundwater sampling, a round of synoptic depth-to-water measurements will be collected from the monitoring wells. The synoptic measurements will involve the measurement of water levels and the depths in on-site monitoring wells and piezometers in as short time frame as possible to determine the water level surface and the approximate direction of groundwater movement across the Site. A potentiometric surface map will be constructed using the groundwater elevations to determine the direction of groundwater flow.

Monitoring well MW-6S will be abandoned using a Portland cement/bentonite (7% mixture) that will be tremie-grouted to the bottom of the well. All protective casing will either be pulled from the ground or will be cut approximately 2-feet below ground surface.

3.2.2 Groundwater Quality

3.2.2.1 **Well Development**

Prior to the collection of any groundwater samples, all existing and new shallow wells will be developed using a surge-block and pump method. Well development will continue using procedures outlined in the Phase I RFI Work Plan until the development water in each well is relatively sediment free, and exhibits satisfactory clarity, yield, and stabilized pH and specific conductance readings. The wells will be allowed to equilibrate for a minimum of a two week period prior to the initiation of any groundwater sampling activities. Decontamination of well development equipment will follow procedures outlined in the Phase I RFI Work Plan.

3.2.2.2 **Purging**

The depth-to-water in each monitoring well will be determined and the purge volume will be calculated. This will provide the sampling team with an estimate of approximate purging time for stabilization of purge parameters. The wells will be purged using a decontaminated stainless steel low-flow bladder pump that will be placed at the mid-point of the screen. The wells will be purged according to the procedures outlined in the Phase I RFI Work Plan. The purge parameters of pH, temperature, conductivity, redox potential, and dissolved oxygen will be collected using a flow-through cell. Turbidity will also be measured during purging. The parameters will be allowed to stabilize to within 10% over three readings and pH readings differ by less than 0.1 unit.

All purging and sampling will be completed from the least suspected contaminated well to the most contaminated well to minimize the potential for cross-contamination.

3.2.2.3 **Groundwater Sampling**

Once the field parameters have stabilized, the groundwater samples will be collected in laboratory-supplied bottles containing the necessary preservatives following procedures outlined in the RFI Work Plan. The samples will be packed with ice and shipped to TriMatrix Laboratories Inc. for analysis of eight RCRA metals, and antimony using EPA Method SW-846 6010/7000 series depending on the required detection limits for the project. If groundwater samples cannot be collected using low-flow procedures, then total and dissolved metal samples will be collected. Samples for dissolved metals will be filtered through a dedicated disposable Nalgene 0.45 μm membrane filter immediately after collection and prior to preservation.

All decontamination, sample handling and shipment protocols will follow procedures outlined in the Phase I RFI Work Plan.

Two groundwater sampling rounds are proposed for the shallow monitoring wells at the Site. There will be no less than three months between sampling rounds.

3.3 SOIL SAMPLING

Off-site soil samples will be collected to more fully characterize the extent of site-related constituents. A 200-foot grid will be used to guide the soil sampling efforts (Figure 3-2). The grid will extend 600' towards the west along the western property line and 800' towards the north, although as stated in the Phase I RFI Work Plan, not every grid node will necessarily be sampled because of access and location selection criteria. Approximately 65 locations will be sampled off-site. All samples will be analyzed for lead and arsenic. Surface samples (0-3 inches) will be collected using dedicated disposable scoops; and subsurface samples (3-10 inches) will be collected using decontaminated hand augers. The samples will be homogenized in decontaminated stainless steel bowls prior to being placed in the laboratory-supplied sample jars. The decontamination procedures which will be followed are presented in Appendix B of the Phase I RFI Work Plan. Soil locations will be surveyed by a professional surveyor licensed in the state of Indiana.

3.4 SEDIMENT SAMPLING

Sediment samples from depths of 0-6-inches and 6-12-inches will be collected along the storm water ditch that drains the northwest corner of the site and from the existing stormwater retention lagoon that drains to the south of the site (Figure 3-1). Approximately 400 linear feet of the northwest drainage ditch will be sampled using a 75-foot grid spacing. Approximately 1400 linear feet of the retention/south drainage ditch will be sampled using a 75-foot grid spacing. A total of 12 samples from six locations will be collected from the northwest ditch. A total of 32 samples from 16 locations will be collected from the off-site area along the fenceline from the south ditch. All samples will be collected from the center of the drainage channels. All samples will be collected using a decontaminated hand auger. Soil samples will be homogenized in decontaminated stainless steel bowls prior to placement into laboratory-supplied jars. All samples will be analyzed for lead and arsenic. Sediment locations will be surveyed by a professional surveyor licensed in the State of Indiana.

4.0 ANCILLARY PLANS AND SCHEDULE

The following plans will be used during completion of the Phase II RFI:

- Project Management Plan
- Quality Assurance Project Plan and Data Management Plan
- Health and Safety Plan
- Community Relations Plan

4.1 PROJECT MANAGEMENT PLAN

The Project Management Plan describes the project organization, key personnel, and their roles and responsibilities to complete the RFI. Technical and administrative roles for this Phase II RFI will be assigned to staff or subcontractors who have the appropriate qualifications to carry out their respective responsibilities. The project management plan will be followed as outlined in Appendix A of the Phase I RFI Work Plan with the following changes.

AGC Quality Assurance Manager - Jennifer Baier

AGC Task Manager(s) - Kathryn West

Ms. West will serve as the task manager responsible for directing and supervising the abandonment, drilling, well installation, development, and all sampling activities that will occur under this Phase II RFI. The task manager will be responsible for providing an interface between the Project Manager and various staff and technical personnel, managing subcontractors, implementing and overseeing project plans, directing field activities, and monitoring investigation progress, quality control, writing and reviewing technical documents, and monitoring budget status.

Health and Safety Officer

One field personnel (team lead) will be assigned to serve as the Site Health and Safety Officer and will have responsibility and authority to implement the health and safety plan (HASP) during implementation of field activities. The project manager will maintain the authority to re-assign the Health and Safety Officer responsibilities throughout the duration of the project.

4.2 PROJECT QUALITY ASSURANCE

The Quality Assurance Project Plan and Data Management Plan describes the data collection and management procedures to be followed during the course of the RFI. Procedures to be used during the sample collection and custody through the shipment to the laboratory are provided. The data validation and management procedures are also presented in the document. The Quality Assurance Project Plan and Data Management Plan are provided as Appendix B of the Phase I RFI Work Plan.

Technical and administrative roles for this Phase II RFI will be assigned to staff or subcontractors who have the appropriate qualifications to carry out their respective responsibilities. The Quality Assurance Project Plan including sampling procedures will be followed as outlined in Appendix B of the Phase I RFI Work Plan with the following changes:

Section 1.1.1 and Section 1.1.2: The overall objectives during Phase II of the data collection will not include dust sampling. Parameters listed in Table 1-1 were proposed for the Phase I RFI and will be incorporated into the Phase II plan with the exception that no volatile organic analyses will be requested.

Section 2.3 Quality Assurance Responsibilities: Quality Assurance Manager for Advanced GeoServices will be Jennifer Baier, and no field audit will be conducted during the Phase II.

Table 3-3 Sampling and Analysis Program: Summary has been updated for the Phase II sampling requirements.

4.1 Groundwater Sampling: Two groundwater sampling events will be conducted for all existing and proposed shallow on-site monitoring well locations.

4.2 Soil Sampling: Soil samples will be collected using a 200 foot grid spacing in off-site areas north and west of the Site. At a minimum 130 soil samples will be collected from 65 locations.

4.3 Interior Sampling: No interior sampling will be performed during the Phase II RFI field activities.

4.4 Sediment Sampling: Sampling of 0-6 inches and 6-12 inches below ground surface will be performed in the northern drainage ditch and the western drainage ditch (from the storm water lagoon). Sediment samples will be collected from on-site and off-site locations.

4.3 HEALTH AND SAFETY PLAN

The Health and Safety Plan is provided as Appendix C of the Phase I RFI Work Plan. The Health and Safety Plan will be followed by all personnel conducting sampling activities at the Site. Technical and administrative roles for this Phase II RFI will be assigned to staff who have the appropriate qualifications to carry out their respective responsibilities. The project Health and Safety Plan will be followed as presented in Appendix C of the Phase I RFI Work Plan with only personnel changes as noted above in Section 4.1.

4.4 COMMUNITY RELATIONS PLAN

The Community Relations Plan is provided as Appendix D of the Phase I RFI Work Plan. The plan is intended to describe the procedures for disseminating information about the RFI to the general public. The project Community Relations Plan will be followed during the Phase II RFI as presented in Appendix D of the Phase I RFI Work Plan with only the proposed scope of work and activities

modified to reflect the objectives of the Phase II scope of work and changes in personnel as noted above in Section 4.1.

4.5 SCHEDULE

The estimated project schedule is shown on Figure 4-1, and shows that the Phase II RFI investigation will be conducted in a sequence of progressive work tasks. The Phase II RFI Work Plan delivery, review and approval by USEPA and IDEM comprise the first task.

5.0 REFERENCES

Meyer, Wm., J.P. Resson, and Gillies, D.C. Availability of Groundwater in Marion County, Indiana, U.S. Geological Survey. Open-File Report 75-312.

TABLES

TABLE 3-3
REFINED METALS SITE
SAMPLING AND ANALYSIS PROGRAM SUMMARY - PHASE II RFI

Sample Location	Matrix	Parameters	Number of Samples[3]	Field Duplicate	Matrix Spike	Blank[1]	Total Number of Samples[2]
Monitoring Wells (Total of 9 Wells)	Groundwater (Round 1) *Two sampling rounds are proposed.*	Turbidity	9	-	-	-	9
		pH	9	-	-	-	9
		Redox potential	9	-	-	-	9
		Specific Conductance	9	-	-	-	9
		Temperature	9	-	-	-	9
		Dissolved Oxygen	9	-	-	-	9
		RCRA Metals[4] plus Antimony	9	1	2	2	14
Off-Site Soils	Soil	Lead and Arsenic	130	26	13	26	195
Drainage Channels	Sediment	Lead and Arsenic	NW 12 South 32	2 4	1 2	2 4	17 42

Notes
1 Blank total includes estimated number of field and equipment blanks.
2 Total number samples per event not including QA/QC.
3 This number reflects the fewest amount of samples to be taken.
4 RCRA Metals include arsenic, barium, cadmium, chromium, lead, selenium, and silver.

FIGURES

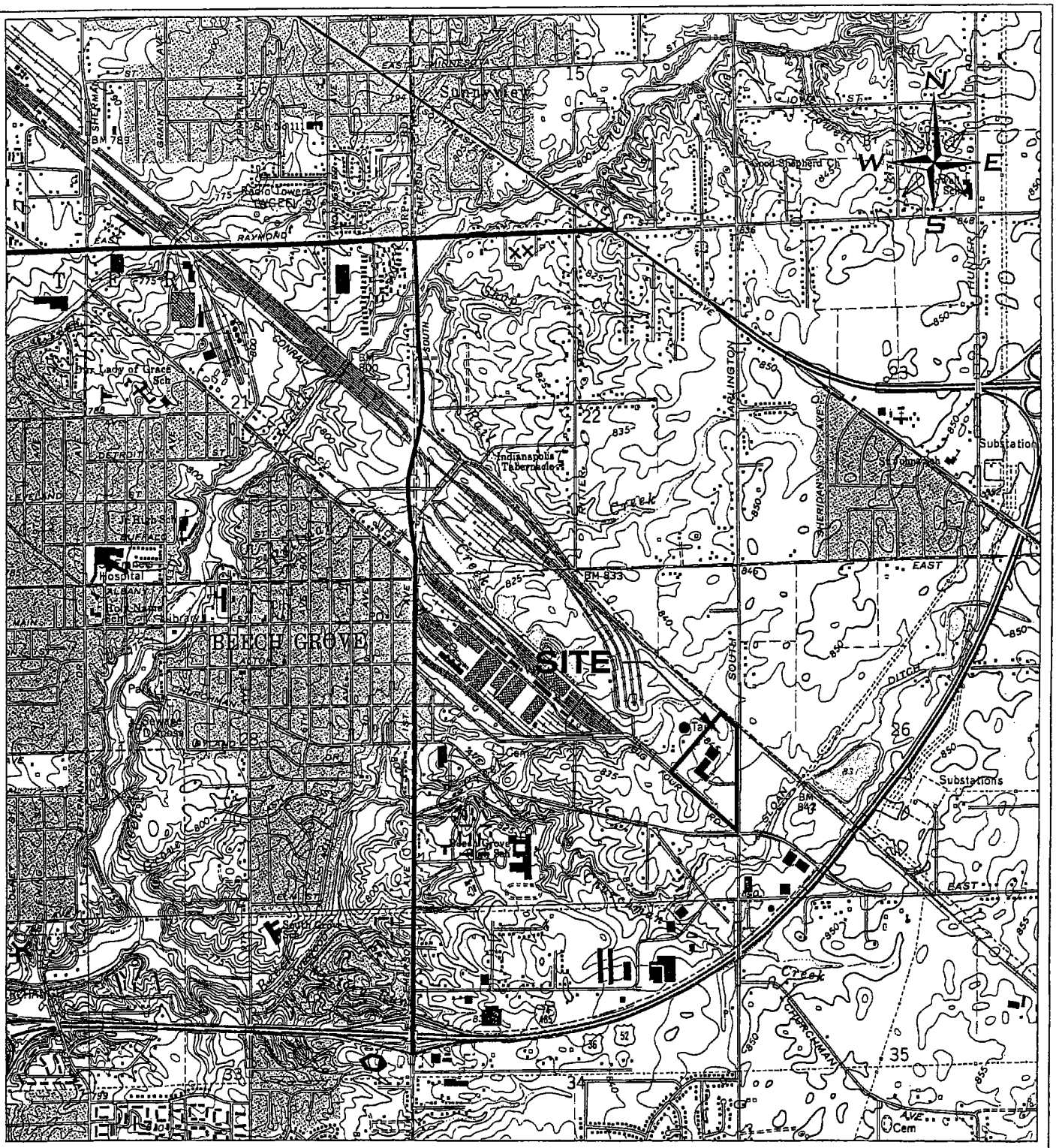

REF. U.S.G.S. 7 1/2 MINUTE
BEECH GROVE, IND
QUADRANGLE MAP

REFINED METALS CORPORATION
PHASE II RCRA FACILITY INVESTIGATION
BEECH GROVE, IN

Date: 8/27/98	SITE LOCATION MAP
Scale: N.T.S.	
Drawn By: P.S.G.	
Checked By: S.W.K.	Advanced GeoServices Corp. Chadds Ford Business Campus, Rts. 202 & 1 Brandywine One, Suite 202 Chadds Ford, Pennsylvania 19317
Project Mgr: P.G.S.	
Dwg No. 98478-01	Project No. 98-478-01
Issued:	FIGURE: 1-1

J:\REFINED METALS\DRAWINGS\9847801\98478-18

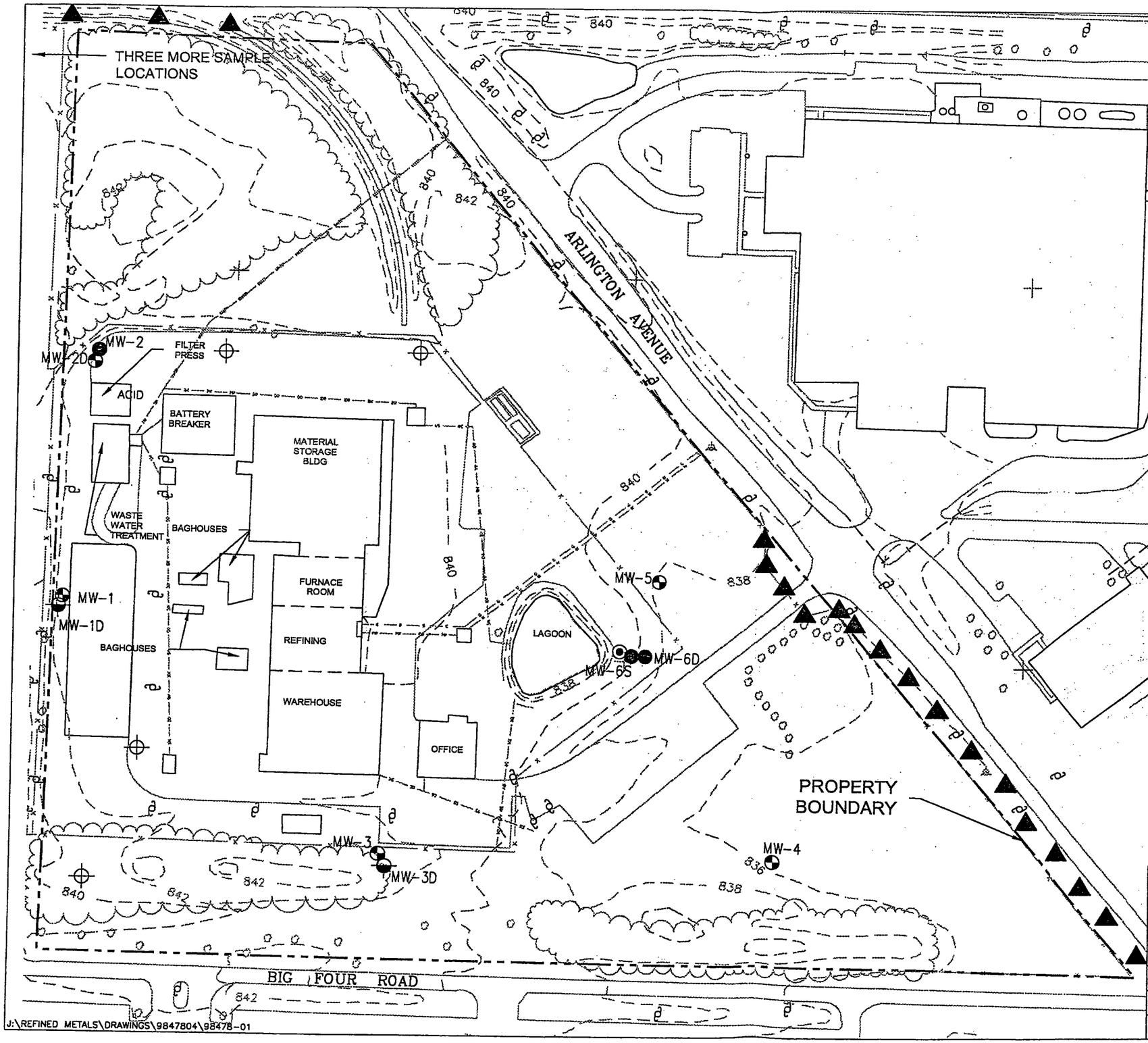

J:\REFINED METALS\DRAWINGS\9847804\98478-01

LEGEND

- EXISTING MONITORING WELL–SURVEYED BY THE SCHNEIDER CORP., INDIANAPOLIS, IN
- MONITORING WELL–INSTALLED AS PART OF RFI ACTIVITIES–SURVEYED BY THE SCHNEIDER CORP., INDIANAPOLIS, IN
- MW-1D — DEEP TEST BORING FROM RFI ADVANCED WITH INTENTION OF CREATING DEEP WELL THAT DID NOT ENCOUNTER WATER AND THEREFORE MONITORING WELL WAS NOT CONSTRUCTED
- PROPOSED PHASE II SHALLOW MONITOR WELL INSTALLATION LOCATION.
- REPLACEMENT LOCATION WELL
- PROPOSED SEDIMENT SAMPLING ALONG DRAINAGE DITCHES.

NOTE:

WELLS DRILLED DURING THE RFI AND CLOSURE INVESTIGATIONS HAVE BEEN ASSIGNED AN S OR D TO DESIGNATE SHALLOW AND DEEP WELLS RESPECTIVELY. ORIGINAL WELLS NOT DESIGNATED WITH AN S OR D ARE CONSIDERED SHALLOW WELLS.

REFINED METALS CORPORATION
PHASE II RCRA FACILITY INVESTIGATION
BEECH GROVE, IN

Scale: 1"=130'	PROPOSED AND EXISTING SITE WELL LOCATIONS
Originated By: K.A.W.	
Drawn By: P.S.G.	
Checked By: KAW	Advanced GeoServices Corp. Chadds Ford Business Campus, Rts. 202 & 1 Brandywine One, Suite 202 Chadds Ford, Pennsylvania 19317
Project Mgr: P.G.S.	
Dwg No. 98478-16	Project No. 98-478-04
Issued: DEC 20 2000	FIGURE: 3-1

Revision	Description	Date	By

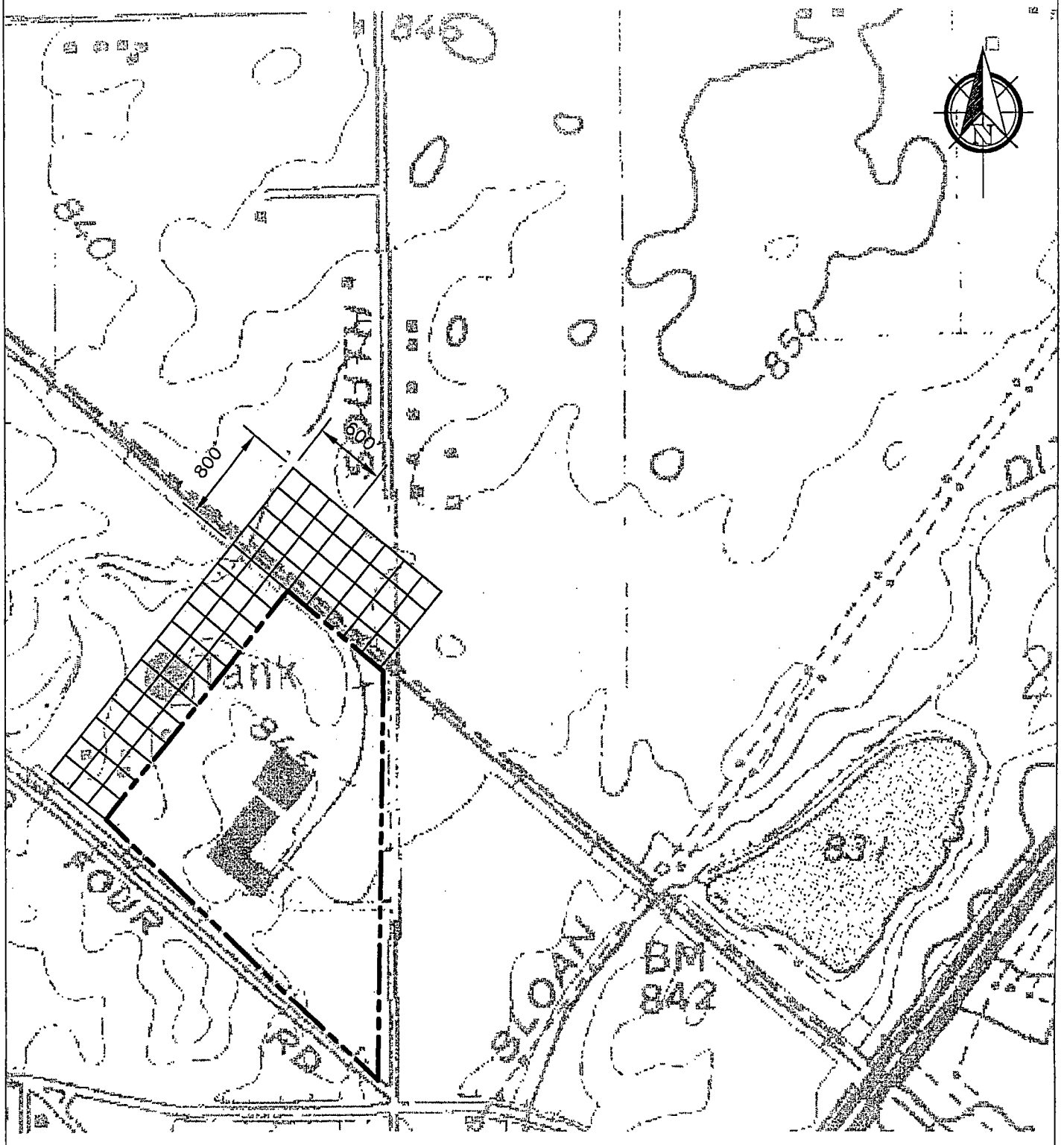

REF. USGS 7 1/2 MINUTE QUADANGLE MAP

REFINED METALS CORPORATION
PHASE II RCRA FACILITY INVESTIGATION
BEECH GROVE, IN

LEGEND

PROPERTY BOUNDARY

SOIL SAMPLING GRID

Scale: APPROX 1"=2000'	OFF-SITE SOIL SAMPLING GRID
Originated By: K.A.W.	
Drawn By: P.S.G.	
Checked By: K.A.W.	Advanced GeoServices Corp. Chadds Ford Business Campus, Rts. 202 & 1 Brandywine One, Suite 202 Chadds Ford, Pennsylvania 19317
Project Mgr: P.G.S.	
Dwg No. 98478-02	Project No. 98-478-04
Issued:	FIGURE: 3-2

J:\REFINED METALS\DRAWINGS\98-478-04\98478-02

Revision	Description	Date	By

ID	TASK NAME	APPROXIMATE DURATION*
1	UTILITY MARKOUTS/MEETINGS	4 DAYS
2	ACCESS AGREEMENTS	5 DAYS
3	SUBCONTRACTING	5 DAYS
4	CLEARING	4 DAYS
5	MOBILIZATION	2 DAYS
6	MONITORING WELL INSTALLATION/ABANDONMENT	6 DAYS
7	WELL DEVELOPMENT (ALL SHALLOW WELLS)	5 DAYS
8	WASTE CHARACTERIZATION AND DISPOSAL	20 DAYS
9	EQUILIBRIUM PERIOD	14 DAYS
10	GROUNDWATER SAMPLING**	6 DAYS
11	SOIL/SEDIMENT SAMPLING	5 DAYS
12	DEMOBILIZATION	1 DAYS
13	LABORATORY ANALYSIS	60 DAYS
14	RECIEPT OF LABORATORY DATA	2 DAYS
15	LABORATORY DATA EVALUATION/VALIDATION	35 DAYS
16	REPORT	95 DAYS

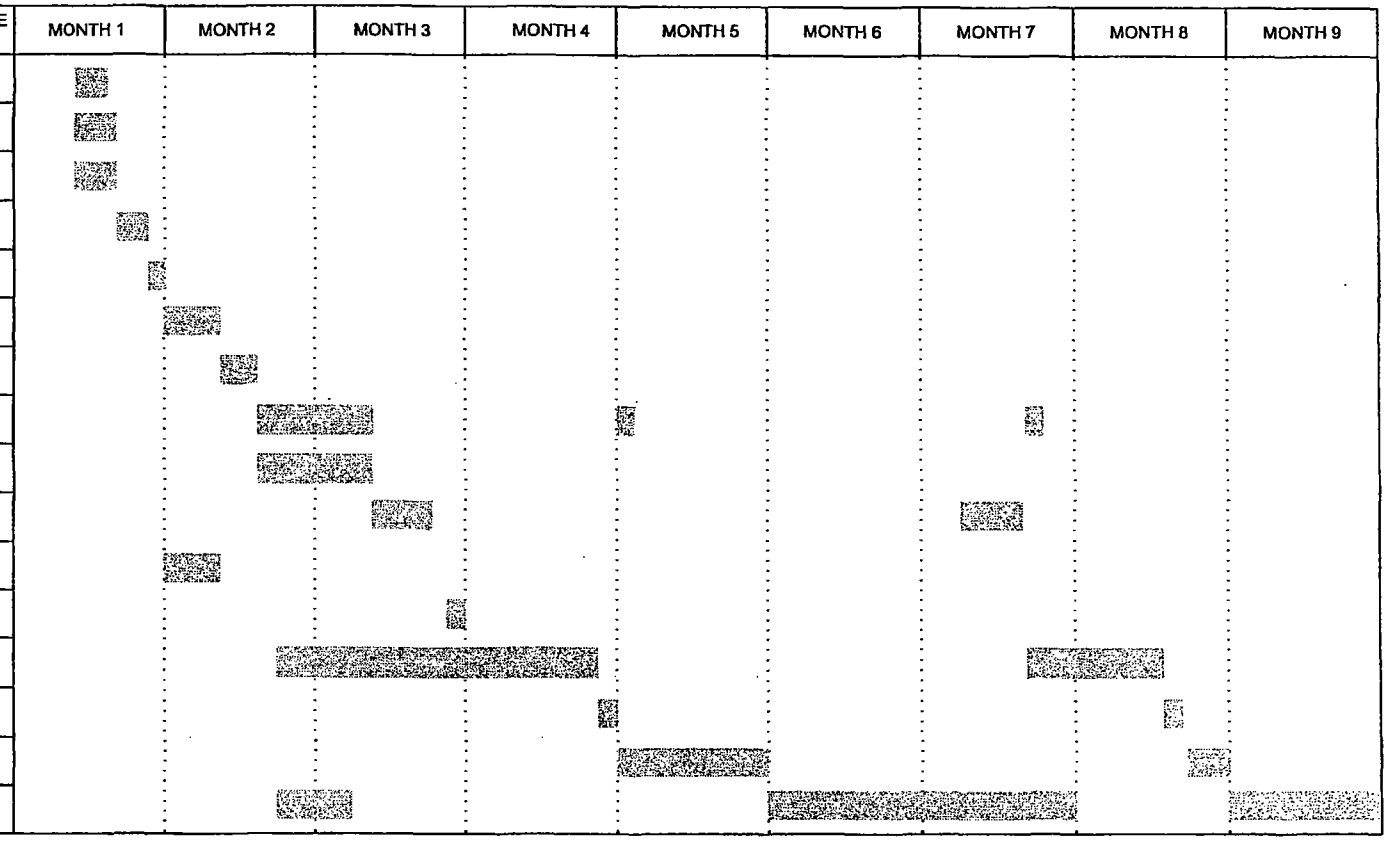

* ASSUMES 8 HOUR WORKDAYS

REFINED METALS CORPORATION
PHASE II RCRA FACILITY INVESTIGATION
BEECH GROVE, IN

Scale: N.T.S.
Originated By: K.A.W.
Drawn By: V.E.N.
Checked By: KAW
Project Mgr: P.G.S.
Dwg No. 98478-03

ANTICIPATED PROJECT SCHEDULE

Advanced GeoServices Corp.
Chadds Ford Business Campus, Rts. 202 & 1
Brandywine One, Suite 202
Chadds Ford, Pennsylvania 19317

Project No. 98-478-04

FIGURE: 4-1

J:\REFINED METALS\DRAWINGS\9847804\98478-03

ADVANCED GEOSERVICES CORP. *"Engineering for the Environment"™*

Chadds Ford Business Campus
Rts. 202 & 1, Brandywine One - Suite 202
Chadds Ford, PA 19317-9676
Voice: (610) 558-3300 Fax: (610) 558-2620

Toll-Free: (888) 824-3992
Email: agc@agcinfo.com
Web Site: http://www.agcinfo.com

July 7, 1999 98-478-01

Mr. Jonathan Adenuga
Environmental Protection Agency, Region 5
77 West Jackson Boulevard
Chicago, IL 60604-3590

RE: Refined Metals Corporation
Beech Grove, Indiana
RFI Work Plan

Dear Mr. Adenuga:

The United States Environmental Protection Agency (USEPA) has granted conditional approval of the RFI Work Plan for the Refined Metals Corporation (RMC) Facility in Beech Grove, Indiana. Approval was granted on the condition that: 1) additional investigative activities be performed to determine the existence of a perched groundwater zone at the site; and 2) the community relations plan be expanded. Provided below is a brief description of the changes made to the RFI Work Plan to address the conditions of the approval. Copies of the associated changes to the RFI Work Plan are attached.

Groundwater Evaluation

The RFI Work Plan has been revised to include the installation of the three deep groundwater monitoring wells at the locations shown on Figure 5-1A. The wells will be installed to a depth of up to 130 feet. Split spoon sampling will be performed during installation of exploratory borings at each well location. Two of the deep wells will be situated near existing wells (MW-2 and MW-3). The third deep well will be located near a new shallow well (MW-6), being installed adjacent to the lagoon as part of the RCRA closure activities.

Addition of the groundwater monitoring wells to the proposed investigation activities will require increasing the time period for field work from 30 to 60 days. The increase will cover time required to perform the exploratory borings, install the wells, develop the wells (including two weeks for the wells to sit after development) and sampling. A revised project schedule is attached.

Community Relations Plan

With regard to EPA comments on the Community Relations Plan, RMC agrees to establish a mailing list of key citizens and interested parties. RMC proposes to disseminate information to those individuals/entities on the mailing list by preparing and mailing newsletters on a semi-annual basis. To ensure that information is being disseminated sufficiently, RMC proposes to include a mail-in survey on every other newsletter. RMC believes that issuance of these newsletters and surveys combined with close contact with overseeing regulatory agencies and local municipalities will ensure that community concerns are being addressed as appropriate. RMC does not believe that publishing information bulletins in newspapers is necessary given the location of the facility within an industrial park and the limited number of properties within 1/4 mile of the facility.

A certification statement executed by Matthew Love of Exide Corporation for the revisions is attached.

Implementation of the approved RFI Work Plan will begin within 15 days from the issue of this letter. Initial activities will include mailing a notification letter to all adjacent property owners and pursuing access for sampling with property owners towards the south and west. Consistent with the schedule contained in the work plan, field activities will be begin on or before August 21, 1999.

If you have any questions, please call Paul Stratman at (610) 558-3300 or Matthew Love at (610) 378-0874.

Sincerely,

ADVANCED GEOSERVICES CORP

Paul G. Stratman, P.E.
Senior Project Consultant

PGS:vm

Enclosures

cc: Matt Love
Robert Steinwurtzel, Esq.
Becky Eiffert

EXIDE® CORPORATION

July 7, 1999

Mr. Jonathan Adenuga
United States Environmental
Protection Agency - Region V
77 West Jackson Boulevard
Chicago, IL 60604-3590

Re: RCRA Facility Investigation Work Plan Revision Certification
Refined Metals Corporation
IND000718130

Dear Mr. Adenuga:

Enclosed are revisions to the RCRA Facility Investigation Work Plan which have been made in response to the EPA's comments dated June 3, 1999. I certify under penalty of perjury that the information contained in or accompanying this revisions is, to the best of my knowledge after thorough investigation, true, accurate, and complete. I am aware that there are significant penalties for submitting false information, including the possibility of fine and imprisonment for knowing violations.

Sincerely,

EXIDE CORPORATION

Matthew A. Love
Manager, Regulatory Affairs

Enclosure

645 Penn Street Reading, PA 19601
P.O. Box 14205 Reading, PA 19612-4205
610/378-0500
www.exideworld.com/power

aquifer is to the northwest. The middle regional semi-confined aquifer is not mapped beneath the Site because an aquitard (clay unit) is mapped in the area. The elevation of the lower regional semi-confined aquifer beneath the Site is approximately 660 ft msl (180 ft bgs), and flow is to the southeast.

The average daily industrial and municipal groundwater pumpage for Marion County is 28.95 million gallons per day (mgpd). Less than 20 percent of the industrial/municipal pumpage is from the bedrock. Also, less than 20 percent of the total pumpage is obtained outside the unconfined glacial-outwash aquifer, which occurs only along the White River and Fall Creek located at least 5.3 miles west of the Site. The major centers of groundwater pumpage occurred within approximately one mile of a major stream. The estimated total domestic groundwater pumpage is 9.0 to 11.0 mgpd.

3.5.2 Site Hydrogeology

Little site-specific hydrogeologic information is available. Five monitoring wells were installed at the site in 1990. Lithologic descriptions were obtained from the monitoring well lithologic logs (Attachment 2); however, water level elevations (depth-to-water measurements and monitoring well elevations) were not available and therefore are not discussed here, and water level contours could not be constructed. According to previous studies, groundwater at the Site is encountered at a depth of approximately 10 feet below the ground surface and flows to the southeast. As stated above, the sand and gravel outwash aquifer is located about 5.3 miles west of the Site along the White River, and the uppermost semi-confined aquifer is encountered below the Site at a depth of about 120 feet. The uppermost semi-confined aquifer flows to the northwest; according to ESC, groundwater at the Site flows to the southeast. Therefore, the shallow groundwater encountered at the Site is believed to represent a local perched zone of saturation in the glacial till which does not appear to follow the regional flow patterns and does not appear to be connected to regional aquifers.

Monitoring wells at the site are screened in 7 to 10 feet of clayey sand and silt. The bottoms of monitoring wells MW-2, MW-3, and MW-4 are all completed in 1.5 to 4 feet of clay. MW-5 was screened above the depth where clay should have been encountered. MW-1 was the only monitoring well that encountered sand. Since the majority of the monitoring wells are completed in clay, the perched aquifer appears to be less than 10 feet in thickness.

Wells MW-1 and MW-2 were identified by ESC as upgradient wells. Since well elevations and depth-to-water measurements are not available, AGC will not specify upgradient wells until a preliminary evaluation of the well network is complete. Wells were sampled on a quarterly basis since June 1991. Monitoring well lithologic and construction logs are provided in Attachment 2.

3.6 ECOLOGICAL SETTING

A site visit was conducted on May 7, 1998 by representatives of Advanced GeoServices Corp. to determine the ecological setting of the Site. In conjunction with the site visit, information regarding species and habitats of concern was requested from the United States Department of the Interior - Fish and Wildlife Service, and the Indiana Department of Natural Resources. No threatened or endangered species have been observed within a one-mile radius of the Site.

Preliminary identification of habitat types was made during a thorough field traverse of the study area. The purpose of the habitat delineation and characterization conducted during the study was to identify, map, and characterize the limited wildlife habitats present at the Site. Habitat information is used in addressing general ecological risks, identifying potentially sensitive wildlife communities, and defining the scope of future studies, if necessary. Delineation of habitat units was based on five primary factors observed during a site visit conducted on May 7, 1998: vegetative community, hydrology, cover type, landform and slope, and observed wildlife usage. Each identified habitat type was mapped according to its associated Anderson land use classification. Habitat community forms document these observations. The following major habitat types, shown on Figure 3-3, were identified at the Site:

5.0 PROPOSED SCOPE OF WORK

5.1 FOCUS OF THE INVESTIGATION

The proposed scope of work for the RFI at the Beech Grove facility has been developed to address the Site on a facility wide basis. Sampling activities have been developed under four main tasks which are listed below:

- Evaluate groundwater flow and quality and determine whether additional characterization is necessary;
- Characterize soil quality;
- Determine concentrations of metals within and below the buildings; and
- Determine whether past drainage areas have been affected by historical contaminant transport.

5.2 GROUNDWATER EVALUATION

5.2.1 Groundwater Flow

Since little information is available on the monitoring wells and potential sample discrepancies exist in previous groundwater sample results, AGC is proposing a phased evaluation of groundwater at the Site. If the results of this evaluation indicate that additional characterization is necessary, such characterization will be proposed as a second phase. The current monitoring well network will be evaluated ~~prior to determining if additional monitoring wells are necessary~~. Water level elevation

data is not currently available to evaluate the current monitoring network. Figure 1-2 shows the location of the existing five on-site monitoring wells. An inspection will be conducted to determine the integrity of each of the wells. The wells will be inspected to determine if the surface seals are intact, locking caps are present, and whether the wells have been damaged. The depth to bottom will be measured and compared with the original depth to bottom to determine whether there are any obstructions, or excess siltation in the wells.

Synoptic water level measurements will be conducted prior to all groundwater sampling events (two quarters are proposed at this time). The synoptic measurements will involve the measurement of water levels and the depths in on-site monitoring wells and piezometers in as short a time frame as possible to determine the water level surface and the approximate direction of groundwater movement across the Site.

During the synoptic water level monitoring round, a team consisting of one or two field personnel will measure water levels in the wells using battery-powered depth-to-water (DTW) meters. At each well, field personnel will measure the depth to water to the nearest 0.01 foot using the surveyed point at the top of the inner well casing for reference. Measurements will be repeated at each well until two consecutive readings are within 0.01 foot. Total depths will also be measured in each well prior to each sampling event to determine if the well has partially filled with sediment. ~~Accurate~~ Purge volumes will be calculated and maintained for each well sampled. The meters will be thoroughly rinsed with deionized water prior to use in each well.

The existing wells will be surveyed by an Indiana-licensed surveyor. The top of the inner casing, top of the outer casing, and the ground surface at each well will be surveyed to 0.01 foot accuracy. Prior to groundwater sampling, a round of depth to water measurements will be collected from the monitoring wells. A potentiometric surface map will be constructed using the groundwater elevations to determine the direction of groundwater flow.

5.2.2 Additional Groundwater Exploration

~~Previous groundwater samples were not collected using the low-flow procedure and potential discrepancies exist between the total and dissolved analytical results (some dissolved concentrations are higher than the total concentrations). Therefore, to more accurately determine the potential for site-related constituents to have entered groundwater, groundwater samples will be collected from existing monitoring wells using the low-flow technique. Groundwater samples will be submitted to the analytical laboratory for analysis of total arsenic, barium, cadmium, chromium, lead, mercury, selenium, silver (8 RCRA metals), and antimony. Additionally, as agreed with the USEPA, 1,1,1-trichloroethane, tetrachloroethene, benzene, toluene, and ethylbenzene will be analyzed in groundwater samples collected during the first sampling event. These parameters are being analyzed because mineral spirits were reportedly used on site, and a parts cleaning unit was maintained by Safety Kleen. If VOCs are not detected in groundwater, no additional VOC analysis of groundwater will be required.~~

~~The USEPA recommends purging and sampling groundwater monitoring wells at low rates (0.2 to 0.3 liters per minute (L/min)). Purging at low rates (micropurging), as compared to past traditional methods, prevents further development of the well and mobilization of additional particulate and colloidal matter. Low-flow sampling reduces well turbidity, and minimizes potential changes in chemical concentrations resulting from either mixing of formation water with stagnant water in the well casing. Wells should be purged below their recovery rates to avoid drawdown during pumping and eliminate vertical migration of water contained in the formation above the well screen. Researchers (Puls, 1991; Powell and Puls, 1993; and Robin and Gillham, 1987) have concluded that representative groundwater samples can be obtained through the use of micropurging without removing numerous well volumes; samples are collected after measurement of specific field parameters stabilize. Turbidity, redox potential, and dissolved oxygen, pH, and conductivity should be measured using flow-through cells. Purging is complete when pH varies by less than 0.1 standard~~

~~units and all other field indicator parameters vary by less than 10 percent over at least two measurements made three minutes apart. The volume of water purged can be decreased significantly when using micropurge sampling methods.~~

~~Two quarterly groundwater sampling events will be conducted using the low-flow techniques. The analytical results and groundwater flow data will be evaluated to determine whether the existing monitoring well network is sufficient to detect a release to groundwater. Results of the two quarterly sampling events and water level elevations will be evaluated to determine whether additional groundwater characterization is necessary; if so, a second phase will be recommended.~~

To further evaluate groundwater conditions beneath the site, three deep monitoring wells will be installed at the site. Two of the wells will be situated adjacent to existing shallow groundwater wells, and a third well will be installed in conjunction with a sixth shallow monitoring well proposed along the edge of the existing lagoon (which is being installed as part of the RCRA Closure Plan). The sixth shallow well will be installed roughly downgradient of the lagoon, as determined during the groundwater flow evaluation described in Section 5.2.1.

5.2.2.1 **Exploratory Borings**

Three exploratory borings will be performed in the vicinity of the proposed deep wells to collect information about the subsurface geology and depth to the regional groundwater table. The borings will be advanced using hollow stem auger techniques and split spoon sampling (ASTM D 1586). A temporary casing will be set into the clay unit that underlies the perched zone currently monitored. The temporary casing will be used so that any contamination that may exist in the perched zone does not migrate to greater depths. Drilling and sampling below the perched zone will be conducted through the temporary casing. Split spoon samples will be collected continuously from the ground surface to a depth of 40 feet. Below 40 feet split spoon samples will be collected every 5 feet until

the boring penetrates into the regional water-bearing zone. Once the regional water-bearing zone (uppermost semi-confined aquifer) is encountered, continuous split spoon samples will be collected to determine the screened interval. A minimum of 5 or 10 feet of screen will be set in each well. The boring will be terminated at the water-bearing zone or a maximum depth of 130 feet, whichever occurs first.

The exploratory borings will be logged by an AGC geologist. Results of the borings will be used to design the monitoring wells.

5.2.2.2 **Well Installation Activities**

Three deep monitoring wells will be completed. One will be adjacent to MW-3, the second will be adjacent to MW-2 and the third will be adjacent to proposed shallow well MW-6 (Figure 5-1A). The proposed monitoring wells will be installed using hollow stem auger (HSA) and ODEX or mud rotary drilling techniques.

The wells will be double-cased into clay to isolate the shallow groundwater zone. HSA drilling will be used to advance a minimum 12-inch borehole approximately five feet into the clay layer that underlies the shallow groundwater at the site. An 8-inch inside diameter (ID) steel casing will be placed inside the HSAs and tremie grouted into place using a 95% cement/5% bentonite grout. The grout will be allowed to set overnight at a minimum.

An 8-inch outside diameter (OD) borehole will be advanced to the completion depth using mud rotary drilling techniques or ODEX. The completion depth is estimated at approximately 120 to 130 feet below ground surface (bgs), but will be determined based on conditions encountered during the exploratory borings (Section 5.2.2.1).

The monitoring wells will consist of 4-inch ID, flush-threaded, Schedule 40 PVC riser with factory slotted, 0.010-inch or 0.005-inch slot, PVC well screen. A 0.010-inch slot screen will be used unless field conditions indicate that the formation is too fine and that a 0.005-inch slot is necessary to complete the wells. Five or ten-foot well screen lengths will be installed, based on lithology determined in the field. The wells screens will be sand packed to approximately two feet above the top of the screen with No. 1 sand if the 0.010-inch slot screen is used. No. 0 sand will be used if a 0.005-inch slot screen is used. A minimum 2-foot thick bentonite seal will be installed on top of the sand pack. The remaining annulus of each borehole will be tremie-grouted to the surface using a 95% cement/5% bentonite grout. Anticipated well construction details are presented on Figure 5-2; however, well construction may vary based on actual conditions encountered in the field.

All deep monitoring wells will be completed with a minimum 6-inch ID steel protective casing with a locking cap. The protective casing will extend from a depth of three to five feet bgs to approximately two feet above ground. A neat cement or concrete seal will be placed around the protective casing to a depth of three to five feet bgs. A two-foot square well pad will be installed so that the surface slopes away from the well. Wells completed in parking areas or in visually obtrusive areas will be equipped with watertight, flush mount covers, which will be set in a concrete pad as described above. The ground surface and top of inner and outer casing will be surveyed by a Professional Surveyor registered in Indiana.

5.2.2.3 **Well Development**

Monitoring wells will be developed using the surge-block and pump method. Monitoring wells will first be surged using a plunger-type surge block assembly. This will provide the necessary turbulence in and near the well screen to remove fine-grained material and to properly develop the well. The wells will then be purged and developed using a submersible pump or decontaminated bailer. Development will be considered complete after the development water in each well is

relatively sediment free, exhibits a satisfactory clarity and yield, and pH and specific conductance readings have stabilized.

5.2.2.4 **Heavy Equipment Decontamination**

Heavy equipment including drill rigs, auger flights, drill rods, and well casings and screens will be steamed cleaned using potable water upon arrival at the site, between borings, and prior to leaving the site. In some cases, this equipment may require a manual scrubbing prior to steam cleaning. Drilling equipment and well construction materials will be stored above ground on wooden supports and covered with plastic sheeting until use.

5.2.2.5 **Downhole Equipment Decontamination**

Downhole equipment used during well development will be steam cleaned before use in each well. In addition, the pump, flexible hose, and electrical cords will also be steam cleaned and flushed between uses. A minimum of 10 gallons of potable water will be used to flush a 4-inch pump apparatus. If a smaller diameter pump is used, the volume of water will be reduced accordingly.

5.2.2.6 **Purge, Development and Decontamination Water Management/Drill Cuttings**

All fluids generated during well installation and development will be temporarily contained for subsequent treatment at the on-site wastewater treatment facility. Drilling mud will be recirculated during drilling at each location. Remaining drilling mud that can not be treated on-site will be drummed for further characterization and disposal.

5.2.3 Groundwater Quality

Previous groundwater samples were not collected using the low-flow procedure and potential discrepancies exist between the total and dissolved analytical results (some dissolved concentrations are higher than the total concentrations). Therefore, to more accurately determine the potential for site-related constituents to have entered groundwater, groundwater samples will be collected from the five original monitoring wells, the sixth shallow well being installed as part of RCRA closure activities and the three deep wells installed as part of the RFI, using the low-flow technique. Groundwater samples will be submitted to the analytical laboratory for analysis of total arsenic, barium, cadmium, chromium, lead, mercury, selenium, silver (8 RCRA metals), and antimony. Additionally, as agreed with the USEPA, 1,1,1-trichloroethane, tetrachloroethene, benzene, toluene, and ethylbenzene will be analyzed in groundwater samples collected from the six shallow wells during the first sampling event. These parameters are being analyzed because mineral spirits were reportedly used on site, and a parts cleaning unit was maintained by Safety Kleen. If VOCs are not detected in groundwater, no additional VOC analysis of groundwater will be required.

The USEPA recommends purging and sampling groundwater monitoring wells at low rates (0.2 to 0.3 liters per minute (L/min)). Purging at low rates (micropurging), as compared to past traditional methods, prevents further development of the well and mobilization of additional particulate and colloidal matter. Low-flow sampling reduces well turbidity, and minimizes potential changes in chemical concentrations resulting from either mixing of formation water with stagnant water in the well casing. Wells should be purged below their recovery rates to avoid drawdown during pumping and eliminate vertical migration of water contained in the formation above the well screen. Researchers (Puls, 1991; Powell and Puls, 1993; and Robin and Gillham, 1987) have concluded that representative groundwater samples can be obtained through the use of micropurging without removing numerous well volumes; samples are collected after measurement of specific field

parameters stabilize. Turbidity, redox potential, and dissolved oxygen, pH, and conductivity should be measured using flow-through cells. Purging is complete when pH varies by less than 0.1 standard units and all other field indicator parameters vary by less than 10 percent over at least two measurements made three minutes apart. The volume of water purged can be decreased significantly when using micropurge sampling methods.

Two quarterly groundwater sampling events will be conducted using the low-flow techniques. The analytical results and groundwater flow data will be evaluated to determine whether the existing monitoring well network is sufficient to detect a release to groundwater. Results of the two quarterly sampling events and water level elevations will be evaluated to determine whether additional groundwater characterization is necessary; if so, a second phase will be recommended.

5.2.4 Sampling Procedures

5.2.4.1 Well Evacuation

An initial inspection of the condition of each well will be made and recorded in the field book. The depth to water in each monitoring well will be determined and the purge volume calculated. This will provide the sampling team with an estimate of when stabilization of purging parameters may occur. Monitoring wells will be purged and sampled from the suspected least contaminated well to the most contaminated well to minimize the potential to cross-contaminate samples.

The wells will be purged using a low-flow pump placed at the midpoint of the screen in each well. The wells will be purged at a flow rate ranging from 100 to 300 milliliters per minute mls/min, depending on the yield of the well. A flow-through cell will be used to measure pH, temperature, conductivity, redox potential, and dissolved oxygen at 3 to 5 minute intervals during purging.

units and all other field indicator parameters vary by less than 10 percent over at least two measurements made three minutes apart. The volume of water purged can be decreased significantly when using micropurge sampling methods.

Two quarterly groundwater sampling events will be conducted using the low-flow techniques. The analytical results and groundwater flow data will be evaluated to determine whether the existing monitoring well network is sufficient to detect a release to groundwater. Results of the two quarterly sampling events and water level elevations will be evaluated to determine whether additional groundwater characterization is necessary; if so, a second phase will be recommended.

5.2.3 Sampling Procedures

5.2.3.1 Well Evacuation

An initial inspection of the condition of each well will be made and recorded in the field book. The depth to water in each monitoring well will be determined and the purge volume calculated. This will provide the sampling team with an estimate of when stabilization of purging parameters may occur. Monitoring wells will be purged and sampled from the suspected least contaminated well to the most contaminated well to minimize the potential to cross-contaminate samples.

The wells will be purged using a low-flow pump placed at the midpoint of the screen in each well. The wells will be purged at a flow rate ranging from 100 to 300 milliliters per minute mls/min, depending on the yield of the well. A flow-through cell will be used to measure pH, temperature, conductivity, redox potential, and dissolved oxygen at 3 to 5 minute intervals during purging. Turbidity will also be measured at the same time interval. The wells will be purged until the field parameters stabilize to within 10% over three readings and pH readings differ by less than 0.1 unit.

Turbidity will also be measured at the same time interval. The wells will be purged until the field parameters stabilize to within 10% over three readings and pH readings differ by less than 0.1 unit.

If insufficient volume is available in any monitoring well to purge using low-flow techniques (i.e., the low-flow pump cannot remove water from a well), a decontaminated stainless steel or Teflon bailer will be used to purge the well.

Purge water will be contained in 55-gallon drums at each well location until analytical results of groundwater samples are evaluated. If groundwater samples are free from contaminants then the purge water from those wells may be discharged to the ground surface. Purge water will not be allowed to flow off-site.

If samples indicate relatively high levels of contaminants, the water will be contained in drums prior to disposal at an appropriate facility; this may include processing through the on-site waste water treatment plant. Drums will be labeled with the location and date of generation (i.e., purge water, MW-1, 5/25/96) and will remain at the well location until disposal.

5.2.4.2 Sample Withdrawal

Once the field parameters stabilize, the flow rate will be reduced to 100 mls/min. for collecting VOC samples and 100 to 300 mls/min. for the remaining parameters. Samples will then be collected directly from the pump discharge line into properly labeled sample bottles containing the necessary preservatives.

If sufficient volume is not available to sample with the low-flow pump, a dedicated Teflon bailer will be used to collect the sample. The dedicated disposable bailer will be lowered slowly into the screened interval to collect the sample with minimal agitation to the water. If any samples are

collected with a bailer, both total and dissolved metals will be analyzed. Samples for dissolved metals analyses will be field filtered through a dedicated disposable Nalgene 0.45 μm membrane filter immediately after collection and prior to preservation. The sample will be decanted into the dedicated Nalgene disposable filtration unit and filtered under vacuum pressure created by a hand-held pump.

5.3 SOIL SAMPLING

5.3.1 On-Site Soil Sampling

Soil samples will be collected on the site to more fully determine the extent of site-related constituents in soil. Soil sampling results collected by ENTACT were used as a screening level to help determine sample locations. In areas where several samples had low concentrations (<500 ppm) fewer samples are proposed (southeastern corner). A 100-foot grid will be used to guide the soil sampling efforts, although as stated, not every grid node will be sampled. Figure 5-1 shows the arbitrary grid and the proposed soil sample locations. A total of 58 locations will be sampled on-site; samples will be collected from depths of 0 to 3 inches and 3 to 10 inches bgs at each location. Ten sample locations will also be sampled from 24-30" bgs. These samples will be collected from areas where screening results indicated the highest concentrations in surface and subsurface samples. Several soil piles were observed northeast of the production area during AGC's site visits (Figure 5-1). Four soil samples from two sample locations will be collected from the two largest piles (sample locations not specified on Figure 5-1). Samples will be collected from the piles to characterize the soils.

All samples will be analyzed for eight RCRA metals. Surface samples will be collected using dedicated disposable scoops; and subsurface samples will be collected using decontaminated hand augers. The samples will be homogenized in decontaminated stainless steel bowls prior to being

placed in the laboratory-supplied sample jars. Decontamination procedures are described in the QAPP (Appendix B).

5.3.2 Off-Site Soil Sampling

Off-site locations will be sampled to help define the extent of contamination and determine whether contamination extends beyond the facility property line. Four locations will be sampled on the Citizens Gas Company property located northwest of the Site. Results of the XRF screening indicated that an area of high soil lead concentrations existed near the northern property boundary (bordering Citizens Gas Company). Historical surface water runoff could have transported surface soils onto the Citizens Gas Company property. Four locations will also be sampled on the Wavetech property, south of the Site (Figure 5-1). Samples are being collected on the Wavetech property because several locations along the southwestern property border had screening results near 1,000 ppm.

Samples will be collected from depths of 0 to 3 inches and 3 to 10 inches bgs using dedicated disposable scoops and decontaminated hand augers as described above. Based on previous screening results (high soil lead concentrations along the northern property boundary), two locations on the Citizens Gas Company site will also be sampled from 24-30" bgs. Samples will be submitted to the analytical laboratory and analyzed for eight RCRA metals.

5.3.3 Diesel Spill Soil Sampling

Since documentation of the closure of the diesel spill and response action was not available, soil samples will be collected from the former spill area. The spill from the out-of-service diesel tank reportedly occurred outside of the containment wall and flowed along a drainage channel north of

the refining area. Three locations along the drainage channel will be sampled beginning near the containment area (Figure 5-1).

Samples will be collected from 0 to 3 inches, and 3 to 10 inches bgs at each location. Surface samples will be collected using dedicated disposable scoops; and subsurface samples will be collected using decontaminated hand augers. The samples will be placed directly into laboratory-supplied sample jars. Decontamination procedures are described in the QAPP (Appendix B). Samples will be submitted to the analytical laboratory and analyzed for benzene, toluene, ethylbenzene, cumene, naphthalene, fluorene, and phenanthrene. These parameters are regulated substances for diesel fuel.

5.4 INTERIOR SAMPLING

5.4.1 Floor Dust Sampling

Floor dust sampling will be conducted at three locations on the floor (see Figure 5-2) within the Materials Storage building to characterize the floor material for possible future disposal. Samples will be collected using dedicated disposable scoops. Dust samples will be submitted to the analytical laboratory and analyzed for total lead and cadmium. Additional parameters may also be analyzed to determine the acceptability of the material for resource recovery. The additional parameters and analytical methods will be dictated by the acceptance criteria of the anticipated recycling facility.

5.4.2 Subfloor Soil Sampling

Soil samples will be collected from below the floor slab (subfloor samples) inside the Material Storage Building, the Furnace Room, Refining, and Warehouse from the randomly selected locations shown on Figure 5-2. The floor slabs will be penetrated using a jackhammer or pneumatic drill.

Subfloor samples will be collected from immediately below the floor slab (i.e., 0 - 6"), from 12 to 24 inches, and 24 to 30 inches bgs using decontaminated hand augers. Soil samples will be homogenized in decontaminated stainless steel bowls prior to placing them in laboratory-supplied sample jars. Decontamination procedures are described in the QAPP (Appendix B). Subsurface samples will be analyzed for eight RCRA metals.

5.5 SEDIMENT SAMPLING

Previous sampling efforts did not address past depositional environments at the Site. Therefore, this scope of work will focus on collecting sediment samples from two former drainage channels described in Section 3.2 and identified on aerial photographs, and within the lined lagoon. Samples will be collected from five locations along the intermittent stream on the northern portion of the Site. Samples will be collected from five locations along the former drainage channel from the stormwater lagoon. These samples will be used to evaluate historic depositional environments from past Site activities. Figure 5-3 shows the proposed sediment sample locations.

Samples will be collected from each location at depths of 0 to 6 inches and 6 to 12 inches bgs using a decontaminated hand auger. Soil samples will be homogenized in decontaminated stainless steel bowls prior to placing them in laboratory-supplied sample jars. Decontamination procedures are provided in the QAPP. The samples will be analyzed for eight RCRA metals.

Composite sediment samples will be collected from two locations within the concrete and geomembrane lined surface impoundment. The depth of the sediment will be measured at each sample location; a composite sample will be collected over the vertical profile of sediment at each sample location. Samples will be collected using a decontaminated shovel or disposable scoop so as to not jeopardize the integrity of the liner. Samples will be analyzed for eight RCRA metals.

5.6 SUPPLEMENTARY SURVEY

Soil and sediment sample locations will be surveyed by a professional surveyor licensed in the state of Indiana. In addition, the surveyor will perform additional survey tasks. The additional tasks include surveying the monitoring wells, locating utilities, and collecting additional vertical and horizontal data necessary to confirm the accuracy of the base map used for the figures contained in this plan.

5.0 COMMUNITY RELATIONS PROGRAM

5.1 OBJECTIVES

The objectives of the community relations program include maintaining open channels of communication with local, state, and federal officials, the media, and local citizens, and establishing contact with potentially affected citizens to inform them of site activities.

5.2 COMMUNITY RELATIONS TECHNIQUES

The following activities will be conducted to follow through with the Community Relations Program. The extent to which these techniques are used will depend on community interest in the project.

5.2.1 Document Repository

RMC will provide a copy of all documents generated during the RFI (i.e., RFI Work Plan, Final RFI Report) to the public repository (public library) for public review for 180 days after they are submitted in final form to the EPA.

Any written comments received during the public review will be compiled by RMC and submitted to the EPA Project Manager for evaluation.

5.2.2 Public Meeting

If a substantial amount of public interest is generated by the RFI activities, RMC will hold a public meeting to discuss the project. The USEPA will be notified within 15 days of any planned public

meeting. The notification will include the location, time, date, purpose and agenda of the meeting. The public meeting will allow RMC representatives to present information about the RFI and subsequent activities to the extent they are known. Questions will be recorded during the meeting and then responded to in writing by RMC within two weeks following the meetings.

5.2.3 Establish Contact with Adjacent Neighbors and Interested Parties

To ensure open communications with adjacent and nearby (within 1/4 mile) landowners, key community citizens and groups, and interested parties during the Beech Grove RFI activities, RMC will develop a project mailing list. Individuals and entities appearing on the list will receive semi-annual updates (newsletters) about progress on the project. The first newsletter will be issued during August 1999, with follow-up letters roughly every six months thereafter. The newsletter will include a brief description of the site history, a summary of the ongoing activities and discussion of anticipated future activities. Names of a contact person at Exide Corporation and the USEPA will also be provided. Once a year, the newsletter will include a brief questionnaire/mail-in survey that can be completed and returned.

5.2.4 Maintain Contact with Local Officials

Site-related developments will be communicated to state and local officials, as necessary, to maintain open lines of communication. This will be achieved most effectively by providing copies of the monthly updates to the necessary parties.