US EPA RECORDS CENTER REGION 5
1000998

Clean Harbors Services, Inc.
11800 S. Stony Island Ave.
Chicago, IL 60617

EPA ID No. ILD000608471

RCRA Part B License
Request for Permit
April 19, 2003

Volume 5
Appendices
Section D-10 through D-34

APPENDIX D-10

TECHNICAL SPECIFICATIONS FOR COATING SYSTEMS

Appendix D-10, Data Sheet #1

Chemical Compatibility Chart

Note: The existing container storage areas are coated with epoxy-based and vinylester-based resin sealants manufactured by Transcoat, Inc. Transcoat, Inc. is no longer in business, and manufacturer's chemical compatibility chart is not available. In determining that the the existing sealant was compatible with the waste intended to be stored, the professional engineer reviewing the CHCI Part B relied upon a corrosion resistance chart provided by Dudick Corrosion-Proof, Inc. which manufactures resin systems which are similar to the Transcoat, Inc. materials. A copy of the Dudick corrosion resistence chart is included.

Duriick

Chemical Resistance

Corrosion Resistant Monolithics

Alka

NaCl

3

80°

Organic

O_3

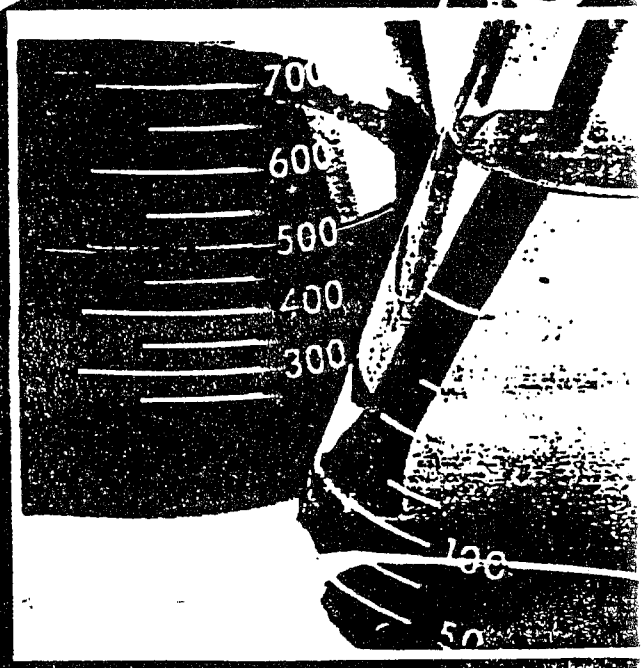

How to Use the Corrosion Guide

The corrosion resistant properties described in this Guide have been determined either by analysis (the typical ability of a resin to resist attack by a specific chemical substance), by testing, or by actual field performance experience. Thus, the ratings shown are useful in helping a potential user make a preliminary evaluation for further investigation.

Since most installations involving hostile chemical environments also involve dynamic processes which can vary widely from industry to industry and plant to plant, it is always necessary to consult the Dudick Corrosion-Proof factory for guidance before making a final selection.

This is especially critical when a chemical is not listed or where a combination of chemicals are present. Thorough testing in the Dudick laboratory using the actual chemicals under simulated processing or storage conditions is the only way to assure satisfactory in-use performance.

To simplify the information presentation, this Guide provides temperature limit data (page 12) and Chemical performance characteristics in separate charts. If an anticipated condition is not covered, please consult a Dudick Corrosion-Proof representative or the factory for additional information or to arrange an appropriate performance test.

Special Note

All technical data and recommendation presented here are believed to be reliab at the time of publication. Because fiel conditions can vary significantly, all dat should be considered only as suggestio of possible applications. Dudick Corros Proof, Inc. assumes no responsibility fo results obtained or damages incurred fr any use whether or not the use resulte from the recommendations in this Guid Any recommendations or technical adv rendered is not to be taken as a license operate under or intended to suggest t infringement of any existing patent. Lia ity, if any, is limited to replacement of products.

Temperature/Chemical Resistance Key

Indicator	Definition	Indicator	Definition	Indicator	Definition
I	Material will withstand constant flow or immersion service	1	Good to the maximum temperature of the product	*NR*	Not recommended
S	Material is suitable for intermittent or Spillage service	2	High Temperature Service to 160° F (71° C)	*NI*	No information available
F	Material will tolerate fumes only	3	Moderate Temperature Service to 140° F (60° C)	*PV*	Performance varies with conditions. Cor sult Dudick for recor mendations or testir
		4	Warm Temperature Service to 100° F (37° C)		

Example

Each grid block in the Guide shows all the information which is available on the product for the use shown. Thus, a block which shows I2. indicates that the product is capable of providing immersion service up to 160° F. Similarly, a block which shows F1 indicates the material will tolerate temperatures the maximum capability shown in the Temperature Limits (page 12), but that it is designed for exposure only to fum

Note: Temperature Limits chart is on page 12.

Dudick

Key

- Material will withstand constant flow or immersion service
- Material is suitable for intermittent or Spillage service
- Material will tolerate fumes only

	Light Duty Linings/Coatings						Toppings		Heavy Duty Linings			
	Protecto-Coat						Protecto-Crete		Protecto-Flake			
	300	600	700	800	900	1000	300	800	600	700	800	900
Acetaldehyde	NR	PV	PV	PV	F4	NR	S4	NR	NR	NR	NR	NR
Acetic Acid (0-10%)	F4	I4	I4	I4	I4	S1	S1	S1	I3	I3	I3	I3
Acetic Acid (10-50%)	NR	S1	F3	S1	S1	F1	S4	S3	I4	F3	I4	I4
Acetic Acid (50-100%)	NR	S3	PV	S3	S3	NR	NR	S3	PV	PV	PV	S4
Acetic Anhydride	NR	S4	S4	S4	S4	PV	S4	S4	S4	S4	S4	S4
Acetone	NR	NR	NR	F4	NR	NR	S4	S4	NR	NR	NR	NR
Acetyl Chloride	F4	PV	PV	PV	PV	PV	S4	S4	PV	PV	PV	PV
Acrylic Acid	F4	PV	PV	PV	PV	PV	NR	S4	I4	I4	I4	I4
Acrylonitrile	NR	NR	NR	NR	NR	PV	NR	NR	NR	NR	NR	PV
Adipic Acid	I4	I4	I4	I4	I4	PV	S4	S4	I4	I4	I4	I4
Alcohol (Ethyl)	S4	I4	I4	I4	I4	I4	S1	S1	I1	I1	I1	I1
Alcohol (Methyl)	NR	PV	PV	PV	F4	S4	S4	S1	I4	I4	I4	I4
Allyl Chloride	NR	NR	NR	NR	NR	PV	NR	S1	PV	NR	PV	S4
Alum	I4	I4	I4	I4	I4	I1	S1	S1	I3	I3	I3	I2
Aluminum Bromide	F4	I4	I4	I4	I4	F1	S4	S1	I1	I1	I1	I1
Aluminum Chloride	I4	I4	I4	I4	I4	I1	S3	S1	I1	I1	I1	I1
Aluminum Fluoride*	S4	S1	S1	S1	S1	NR	S1	S1	I4	I4	I4	I4
Aluminum Hydroxide	S4	F4	NR	F4	S4	S4	S1	S1	I4	NR	I3	I3
Aluminum Sulfate	S4	I4	I4	I4	I4	I1	S1	S4	I3	I3	I3	I2
Ammonia (Dry)	S4	F1	NR	F1	F1	F1	S1	S1	I3	NR	I3	I3
Ammonium Chloride	S4	I4	I4	I4	I4	I1	S1	S1	I1	I1	I1	I1
Ammonium Fluoride*	S4	I4	I4	I4	I4	NR	S1	S2	I3	I3	I3	I3
Ammonium Hydroxide	I4	F4	NR	F4	S4	I1	S1	S1	I2	NR	I2	I2
Ammonium Nitrate	I4	I4	I4	I4	I4	I1	S1	S1	I1	I1	I1	I1
Ammonium Persulfate	I4	I4	I4	I4	I4	I1	S1	S1	I1	I1	I1	I1
Ammonium Sulfate	I4	I4	I4	I4	I4	I1	S1	S1	I1	I1	I1	I1
Ammonium Sulfide	I4	I4	I4	I4	I4	I1	S1	S1	I1	I1	I1	I1
Ammonium Sulfite	I4	I4	I4	I4	I4	F1	S1	S1	I1	I1	I1	I1
Amyl Acetate	NR	S4	NR	S4	S4	NR	NR	NR	PV	NR	F4	F4
Amyl Alcohol	F4	S1	S3	S1	S1	NR	S3	S3	I4	I4	I4	I4
Aniline	NR	S4	S4	S4	S4	NR	NR	NR	NR	I4	I4	I4
Aniline Hydrochloride	F4	S4	S4	S4	S4	F4	S3	S3	I4	I4	I4	I4
Antimony Chloride	S4	I4	I4	I4	I4	I1	S1	S1	I1	I1	I1	I1
Aqua Regia	NR	F4	F4	F4	F4	NR	NR	NR	NR	NR	NR	NR
Arsenic Acid	F4	I4	I4	I4	I4	S4	S1	S1	I3	I3	I3	PV
Barium Acetate	S4	S4	S4	S4	S4	F4	S4	S3	I4	I4	I4	I4
Barium Chloride	I4	I4	I4	I4	I4	I1	S1	S1	I1	I1	I1	I1
Barium Hydroxide	I4	S3	NR	S3	S2	I1	S1	S4	I4*	NR	I4*	I3*
Barium Sulfide	I4	I4	I4	I4	I4	I1	S1	S1	I1	I1	I1	I1
Benzaldehyde	PV	NR	NR	NR	NR	NR	PV	PV	PV	NR	NR	PV
Benzene	NR	PV	PV	PV	NR	NR	S4	S4	NR	NR	NR	S4
Benzene Sulfonic Acid	F4	I4	I4	I4	I4	F4	S4	S1	I1	I1	I1	I1
Benzene Sulfonic Chloride	F4	I4	I4	I4	I4	F4	S4	S1	I1	I1	I1	I1
Benzoic Acid	S4	I4	I4	I4	I4	F4	S1	S1	I1	I1	I1	I1
Benzoyl Chloride	NR	NR	PV	NR	PV	NR	NR	NR	NR	PV	NR	PV
Black Liquor	S4	S1	NR	S1	S1	I1	S1	S3	I1	NR	I1	I1
Bleach(5.5%)*	F4	PV	PV	PV	I1	F1	NR	S4	NR	NR	NR	I1
Boric Acid	I4	I4	I4	I4	I4	I1	S1	S1	I2	I2	I2	I2
Bromine, Wet Gas	NR	NR	NR	NR	NR	NR	NR	NR	F4	F4	F4	F4
Bromine Water (5%)	NR	S4	S4	S4	S4	S4	NR	S4	I4	I4	I4	I4
Butadiene	PV	PV	PV	PV	PV	NR	S4	S4	PV	PV	PV	PV
Butanol	NR	S4	S4	S4	S4	NR	S4	S1	I3	I3	I3	I3
Butyl Acetate	NR	NR	NR	NR	F4	NR	S4	NR	NR	NR	NR	PV
Butyl Carbitol	PV	PV	PV	PV	F4	PV	S4	PV	I4	I4	I4	I4
Butyl Cellosolve	NR	PV	NR	NR	S4	NR	NR	NR	NR	NR	NR	S4
Butyric Acid	NR	F4	F4	F4	F3	NR	NR	NR	I3	I3	I3	I3
Cadmium Platino (Cyanide)	S4	S1	NR	S1	S1	S1	S1	S3	I3	NR	I3	I3
Calcium Bisulfite	S4	I4	I4	I4	I3	F1	S3	S1	I1	I1	I1	I1

1 Good to the maximum temperature of the product
2 High temperature service to 160°F (71°C)
3 Moderate Temperature Service to 140°F (60°C)
4 Warm Temperature Service to 100°F (37°C)

PV Performance varies with conditions. Consult Dudick for recommendations or testing
NR Not recommended
NI No information available

Linings/Toppings					Toppings/Linings						Tiled Vessel Linings				Grouts
Protecto-Glass 300	600	700	800	900	Protecto-Line 100	300	600	700	800	900	Protecto-Seal 300	600	700	800	Grouts 100
S4	NR	NR	NR	NR	S4	S4	S4	S4	S4	S4	NR	NR	NR	NR	S4
S4	I3	I4	I3	I3	S3	S3	I3	I4	I3	I3	S3	I3	I3	I3	S4
NR	I4	F3	I4	I4	S4	NR	I4	S1	I4	I4	S4	I4	F3	I4	NR
NR	PV	PV	PV	S4	NR	NR	S1	S1	PV	S4	NR	PV	PV	PV	NR
NR	S4	S4	S4	S4	S4	NR	S1	S3	S1	S1	NR	S4	S4	S4	NR
S4	NR	NR	NR	NR	S1	S4	S4	S4	S4	S4	S4	NR	NR	NR	S4
S4	NR	PV	PV	S4	S3	S4	S4	S4	S4	S4	S4	PV	PV	PV	NR
NR	I4	I4	I4	I4	PV	NR	I4	I4	I4	I4	NR	I4	I4	I4	NR
NR	NR	NR	NR	S4	NR	NR	NR	NR	NR	PV	NR	NR	NR	NR	S4
S4	I4	I4	I4	I4	I4	S4	I4	I4	I4	I4	S4	I4	I4	I4	NR
S1	I1	I1	I1	I1	I1	S1	I1	I1	I1	I1	S1	I1	I1	I1	S1
S4	I4	I4	I4	I4	I4	S4	I4	I4	I4	I4	S4	I4	I4	I4	S4
NR	PV	NR	F4	S4	NR	NR	S4	NR	PV	S4	NR	PV	NR	PV	NR
S1	I3	I3	I3	I1	I3	S1	I3	I3	I3	I2	S1	I3	I3	I3	S1
S4	I1	I1	I1	I1	S1	S4	I1	I1	I1	I1	S4	I1	I1	I1	S1
S1	I1	I1	I1	I1	I4	S1	I1	I1	I1	I1	S1	I1	I1	I1	S1
S1	I4	I4	I4	PV	I4	S1	I1	I1	I1	I1	S1	I4	I4	I4	S4
S4	I3	NR	I3	I2	I1	S1	I3	NR	I1	I1	S1	I4	NR	I3	S1
S1	I3	I3	I3	I1	I3	S1	I3	I3	I3	I2	S1	I3	I3	I3	S1
S1	I3	NR	I3	PV	I1	S1	I3	S4	I3	I3	S1	I3	NR	I3	F1
S1	I1	I1	I1	I1	I1	S1	I1	I1	I1	I1	S1	I1	I1	I1	S1
S1	I3	I3	I3	I3	I1	S1	I1	NR	I1	I1	S1	I3	I3	I3	S4
S1	I3	NR	I3	I3	I1	S1	I3	NR	I2	I2	S1	I2	NR	I2	S1
S1	I1	I1	I1	I1	I1	S1	I1	I1	I1	I1	S1	I1	I1	I1	S1
S1	I1	I1	I1	I1	I4	S1	I1	I1	I1	I1	S1	I1	I1	I1	S4
S1	I1	I1	I1	I1	I1	S1	I1	I1	I1	I1	S1	I1	I1	I1	S1
S1	I1	I1	I1	I1	I1	S1	I1	I1	I1	I1	S1	I1	I1	I1	S1
S1	I1	I1	I1	I1	I1	S1	I1	I1	I1	I1	S1	I1	I1	I1	S1
S4	S4	NR	S4	S4	S4	C4	PV	NR	S4	S4	S4	PV	NR	F4	S4
S3	I4	I4	I4	I4	S1	S3	I4	I4	I4	I4	S3	I4	I4	I4	S1
NR	NR	I4	I4	I4	NR	NR	NR	I4	I4	I4	NR	NR	I4	I4	NR
S3	I4	I4	I4	I4	I3	S3	I4	I4	I4	I4	S3	I4	I4	I4	S3
S1	I1	I1	I1	I1	I3	S1	I1	I1	I1	I1	S1	I1	I1	I1	S1
NR	NR	NR	NR	NR	NR	NR	NR	NR	NR	F4	NR	NR	NR	NR	NR
S1	I3	I3	I3	PV	PV	S1	I1	I1	I1	I1	S1	I3	I3	I3	S1
S4	I4	I4	I4	I3	S3	S4	I4	I4	I4	I4	S4	I4	I4	S4	S4
S1	I1	I1	I1	I1	I3	S1	I1	I1	I1	I1	S1	I1	I1	I1	S1
S1	I4	NR	I4	I4	I1	S1	I3	NR	I3	I3	S1	I4	NR	I4	S1
S1	I1	I1	I1	I1	I4	S1	I1	I1	I1	I1	S1	I1	I1	I1	S1
PV	PV	NR	NR	PV	PV	PV	PV	NR	NR	PV	PV	PV	NR	NR	PV
S4	I4	NR	I4	I4	I4	S4	S4	NR	S4	S4	S4	NR	NR	NR	S4
S4	I1	I1	I1	I1	S1	I4	I1	I1	I1	I1	S4	I1	I1	I1	S4
S4	I1	I1	I1	I1	NR	S4	I1	I1	I1	I1	S4	I1	I1	I1	S4
S1	I1	I1	I1	I1	I3	S1	I1	I1	I1	I1	S1	I1	I1	I1	S1
NR	NR	PV	NR	PV	I4	NR	NR	PV	NR	PV	NR	NR	PV	NR	PV
S1	I3	NR	I3	I3	I1	S1	I3	NR	I1	I1	S1	I1	NR	I1	S1
NR	NR	NR	I4	I1	NR	NR	NR	NR	NR	I1	NR	NR	NR	NR	NR
S1	I3	I3	I3	I3	I3	S1	I3	I3	I3	I3	S1	I2	I2	I2	S1
NR	NR	NR	NR	F4	NR	NR	F4	F4	F4	F4	NR	F4	F4	F4	NR
NR	I4	I4	I4	I4	NR	NR	I4	I4	I4	I4	NR	I4	I4	I4	NR
PV	PV	PV	PV	PV	PV	PV	PV	PV	PV	PV	PV	PV	PV	PV	S4
S4	I3	I3	I3	I3	I3	S4	I4	I3	I3	I3	S4	I3	I3	I3	S1
S4	NR	NR	NR	PV	I4	S4	NR	NR	NR	PV	S4	NR	NR	NR	S4
S4	I4	I4	I4	I4	I4	S4	I4	I4	I4	S4	S4	I4	I4	I4	S4
NR	NR	NR	NR	S4	S4	NR	S4	S4	NR	S4	NR	NR	NR	NR	NR
NR	I3	I3	I3	I3	NR	NR	I4	I3	I3	I3	NR	I3	I3	I3	NR
S1	I3	NR	I3	I3	I1	S1	I3	NR	I3	I3	S1	I3	NR	I3	S2
						S4	I1	I1	I1	I1	S4	I1	I1	I1	S1

Dudick

Key

I — Material will withstand constant flow or immersion service
S — Material is suitable for intermittent or Spillage service
F — Material will tolerate fumes only

	Light Duty Linings/Coatings						Toppings		Heavy Duty Linings			
	300	600	700	800	900	1000	300	800	600	700	800	900
Calcium Carbonate	I4	I4	I4	I4	I3	I1	S1	S4	I3	I3	I3	I3
Calcium Chloride	I4	I4	I4	I4	I4	I1	S1	S1	I1	I1	I1	I1
Calcium Hydroxide*	I4	I4	NR	I4	I3	I1	S1	S3	I3	NR	I3	I3
Calcium Hypochlorite (5%)*	F4	F4	F4	F4	S4	F4	S4	S3	NR	NR	NR	NR
Calcium Nitrate	I4	I4	I4	I4	I4	I1	S1	S1	I1	I1	I1	I1
Caprylic Acid	NR	I4	I4	I4	I4	NR	NR	NR	I4	I4	I4	I4
Carbon Disulfide	NR	S4	S4	S4	S4	NR	S4	NR	F4	F4	F4	F4
Carbon Tetrachloride	F4	S4	S4	S4	S3	NR	S3	S3	I4	I4	I4	I4
Castor Oil	I4	I4	I4	I4	I4	I1	S1	S1	I1	I1	I1	I1
Chloracetic Acid	NR	F4	F4	F4	F4	F1	NR	S4	F3	F3	F3	F3
Chloral	NR	NR	S4	NR	NR	NR	S4	NR	NR	S4	NR	NR
Chlorine Dioxide	NR	S4	S4	S4	S3	NR	NR	S3	I4	I3	I4	I3
Chlorine Gas (Dry)	NR	F4	F3	F4	F3	NR	NR	S4	I4	I1	I4	I3
Chlorine Gas (Wet)	NR	NR	F4	NR	F4	NR	NR	S2	F4	F1	F4	F4
Chlorine Water (Saturated)	NR	S4	S3	S4	S3	S4	S4	S2	I4	I1	I4	I4
Chlorobenzene	NR	NR	NR	NR	S4	NR	S4	NR	NR	NR	NR	S4
Chloroform	NR	NR	NR	NR	NR	NR	S4	NR	NR	NR	NR	NR
Chlorophenol	NR	NR	NR	NR	NR	NR	NR	NR	NR	NR	NR	NR
Chlorosulfonic Acid	NR	NR	NR	NR	NR	NR	NR	NR	NR	NR	NR	NR
Chlorotoluene	NR	S4	NR	S4	S4	NR	NR	S4	I4	NR	NR	PV
Chromic Acid (10%)	F4	S4	S3	S4	S4	S4	S4	S4	I4	I3	I4	I4
Chromic Acid (40%)	NR	S4	S3	S4	S4	S4	S4	S4	I4	I3	I4	PV
Chromic Chloride	S4	I4	I4	I4	I4	S1	S1	S1	I1	I1	I1	I1
Citric Acid	F4	I4	I4	I4	I4	S1	S4	S1	I1	I1	I1	I1
Copper Plating (Cyanide)	S3	S4	NR	S4	S3	S1	S2	S4	I4	NR	I4	I3
Copper Plating (Acid)	S4	S3	S3	S3	S3	S1	S2	S1	I1	I1	I1	I1
Copper Salts	S3	I4	I4	I4	I4	S1	S1	S1	I1	I1	I1	I1
Corn Oil	S3	I4	I4	I4	I4	I1	S3	S1	I1	I1	I1	I1
Corn Starch	S1	I4	NR	I4	I4	I4	S1	S1	I1	NR	I1	I1
Corn Sugar	S1	I4	NR	I4	I4	I4	S1	S1	I1	NR	I1	I1
Cottonseed Oil	S3	I4	I4	I4	I4	I1	S3	S1	I1	I4	I1	I1
Cresol	NR	NR	NR	NR	PV	NR	NR	NR	NR	NR	NR	PV
Cresylic Acid	NR	NR	NR	NR	NR	NR	NR	NR	NR	NR	NR	NR
Crude Oil	PV	I4	I4	I4	I4	PV	PV	S1	I1	I1	I1	I1
Detergent Sulfonated	PV	I4	PV	I4	I4	PV	PV	PV	I1	PV	I1	I1
Dextrose	S3	I4	I4	I4	I4	I1	S1	S1	I1	I1	I1	I1
Dibutyl Phthalate	I4	I4	I4	I4	I4	I1	S1	S1	I3	I3	I3	I3
Dichloro Acetic Acid (20%)	NR	I4	I4	I4	I4	F1	NR	S3	I4	I4	I4	I4
Diesel Fuel	S4	I4	I4	I4	I4	S3	S1	S1	I1	I1	I1	I1
Diethylamine (100%)	NR	NR	NR	NR	PV	NR	NR	NR	NR	NR	NR	PV
Dimethyl Formamide	NR	NR	NR	NR	PV	NR	NR	NR	I4	NR	NR	PV
Esters, Fatty Acids	PV	I4	S4	I4	I4	PV	PV	PV	I3	I4	I3	I3
Ethyl Acetate	NR	NR	NR	NR	NR	F1	S4	S4	NR	NR	NR	NR
Ethyl Alcohol	S4	I4	I4	I4	I4	I4	S1	S1	I1	I1	I1	I1
Ethylamine	NR	NR	NR	NR	PV	NR	PV	PV	NR	NR	NR	PV
Ethylchloroformate	NR	NR	NR	NR	PV	NR	NR	NR	PV	PV	NR	PV
Ethyl Ether	NR	NR	NR	NR	PV	NR	S4	S4	PV	NR	PV	PV
Ethylene Dichloride	NR	NR	NR	NR	NR	NR	NR	NR	PV	NR	NR	NR
Ethylene Glycol	I4	I4	I4	I4	I4	I4	S1	S1	I1	I1	I1	I1
Ethylene Oxide	NR	PV	PV	PV	PV	PV	PV	S1	PV	PV	PV	PV
Ethyl Sulfate	PV	PV	PV	PV	PV	PV	S4	NR	I4	F4	I4	I4
Ferric Chloride	S4	I4	I4	I4	I4	I1	S1	NR	I1	I1	I1	I1
Ferric Sulfate	S4	I4	I4	I4	I4	I1	S1	S1	I1	I1	I1	I1
Ferrous Chloride	S4	I4	I4	I4	I4	I1	S1	S1	I1	I1	I1	I1
Ferrous Sulfate	S4	I4	I4	I4	I4	I1	S1	S1	I1	I1	I1	I1
Fluoboric Acid*	PV	S4	S4	S4	S4	PV	S4	S4	I2	I2	PV	I2
Fluorine Gas*	NR	NR	NR	NR	NR	NR	PV	PV	NR	NR	PV	PV
Fluosilicic Acid*	PV	S4	S4	S4	S4	PV	S4	S4	I2	I2	PV	I2

*May need synthetic fabric, carbon fillers or HP 201 topcoat. Consult a Dudick

1 Good to the maximum temperature of the product
2 High temperature service to 160°F (71°C)
3 Moderate Temperature Service to 140°F (60°C)
4 Warm Temperature Service to 100°F (37°C)

PV Performance varies with conditions. Consu Dudick for recommendations or testing
NR Not recommended
NI No information available

Linings/Toppings					Toppings/Linings						Tiled Vessel Linings				Grouts
Protecto Class	300	600	700	800	900	Protecto Line	100	300	600	700	800	900	Protecto Seal	300	600	700	800	Grouts	100
S1	I3	I3	I3	I2		I1	S1	I3	I3	I3	I2		S1	I3	I3	I3		S1
S1	I1	I1	I1	I1		I1	S1	I1	I1	I1	I1		S1	I1	I1	I1		S1
S1	I3	NR	I3	I2		I1	S1	I3	NR	I3	I2		S1	I3	NR	I3		S1
S4	NR	NR	I4	I4		NR	S4	NR	NR	I4	I4		S4	NR	NR	NR		S4
S1	I1	I1	I1	I1		I1	S1	I1	I1	I1	I1		S1	I1	I1	I1		S1
NR	4	I4	I4	I4		NR	NR	I4	I4	I4	I4		NR	I4	I4	I4		NR
S4	F4	F4	F4	F4		F4	S4	F4	F4	F4	F4		S4	F4	F4	F4		NR
S3	I4	I4	I4	I4		I4	S3	I4	I4	I4	I4		S3	I4	I4	I4		S1
S1	I1	I1	I1	I1		I3	S1	I1	I1	I1	I1		S1	I1	I1	I1		S3
NR	S4	S4	S4	S4		NR	NR	F3	F3	F3	F3		NR	F3	F3	F3		S4
S4	NR	NR	NR	NR		I4	S4	NR	S4	NR	NR		S4	NR	S4	NR		S4
NR	I4	I3	I4	I4		NR	NR	I4	I3	I4	I4		NR	I4	I3	I4		NR
NR	I4	I1	I4	I4		NR	NR	I4	I1	I4	I4		NR	I4	I1	I4		NR
NR	F4	F1	F4	F4		NR	NR	F4	F4	F4	F4		NR	F4	F1	F4		NR
S4	I4	I3	I4	I4		NR	S4	I4	I1	I4	I4		S4	I4	I1	I4		NR
S4	NR	NR	I4	S4		I4	S4	NR	NR	NR	S4		S4	NR	NR	NR		NR
S4	NR	NR	NR	NR		NR	S4	NR	NR	NR	NR		S4	NR	NR	NR		S4
NR	NR	NR	NR	NR		NR	NR	NR	NR	NR	NR		NR	NR	NR	NR		NR
NR	NR	NR	NR	NR		NR	NR	NR	NR	NR	NR		NR	NR	NR	NR		NR
S4	I4	NR	I4	PV		I4	S4	I4	NR	NR	PV		S4	I4	NR	NR		S4
S4	I4	I3	I4	I4		NR	S4	I4	I3	I4	I3		S4	I4	I3	I4		S4
S4	I4	I3	I4	PV		NR	S4	I4	I3	I4	PV		S4	I4	I3	I4		NR
S1	I1	I1	I1	I1		I1	S1	I1	I1	I1	I1		S1	I1	I1	I1		S1
S1	I1	I1	I1	I1		I2	S1	I1	I1	I1	I1		S1	I1	I1	I1		S2
S4	I4	NR	I4	I3		I2	S4	I4	NR	I4	I3		S4	I4	NR	I4		S1
S2	I1	I1	I1	I1		I3	S2	I1	I1	I1	I1		S2	I1	I1	I1		S3
S1	I1	I1	I1	I1		I1	S1	I1	I1	I1	I1		S1	I1	I1	I1		S1
S3	I1	I1	I1	I1		I4	S3	I1	I1	I1	I1		S3	I1	I1	I1		S4
S1	I1	NR	I1	I1		I1	S1	I1	NR	I1	I1		S1	I1	NR	I1		S1
S1	I1	NR	I1	I1		I1	S1	I1	NR	I1	I1		S1	I1	NR	I1		S1
S3	I1	I4	I1	I1		I4	S3	I1	I4	I1	I1		S3	I1	I4	I1		S4
NR	NR	NR	NR	PV		NR	NR	NR	NR	NR	PV		NR	NR	NR	NR		NR
NR	NR	NR	NR	NR		NR	NR	NR	NR	NR	NR		NR	NR	NR	NR		NR
PV	I1	I1	I1	I1		PV	PV	I1	I1	I1	I1		PV	I1	I1	I1		PV
PV	I1	PV	I1	I1		PV	PV	I1	PV	I1	I1		PV	I1	PV	I1		PV
S1	I1	I1	I1	I1		I1	S1	I1	I1	I1	I1		S1	I1	I1	I1		S1
S1	I3	I3	I3	I3		I2	S1	I3	I3	I3	I3		S1	I3	I3	I3		S1
NR	I4	I4	I4	I4		NR	NR	I4	I4	I4	I4		NR	I4	I4	I4		S4
S1	I1	I1	I1	I1		I2	S1	I1	I1	I1	I1		S1	I1	I1	I1		S1
NR	NR	NR	NR	PV		NR	NR	NR	NR	NR	PV		NR	NR	NR	NR		NR
NR	I4	NR	I4	PV		NR	NR	I4	NR	NR	PV		NR	I4	NR	NR		NR
PV	I4	I4	I4	I3		PV	PV	I3	I4	I3	I3		PV	I3	I4	I3		PV
S4	PV	NR	NR	NR		S4	S4	PV	NR	NR	S4		S4	NR	NR	NR		S4
S1	I1	I1	I1	I1		I1	S1	I1	I1	I1	I1		S1	I1	I1	I1		S1
PV	NR	NR	NR	PV		NR	PV	NR	NR	NR	PV		PV	NR	NR	NR		NR
S4	PV	PV	PV	PV		NR	S4	PV	PV	PV	PV		S4	PV	PV	NR		NR
S4	PV	NR	PV	PV		PV	S4	PV	NR	PV	PV		S4	PV	NR	PV		S4
PV	PV	NR	PV	S4		PV	PV	PV	NR	NR	S4		PV	PV	NR	NR		NR
S1	I1	I1	I1	I1		I1	S1	I1	I1	I1	I1		S1	I1	I1	I1		S1
S4	PV	PV	PV	PV		PV	S4	PV	PV	PV	PV		S4	PV	PV	PV		PV
S4	I4	F4	I4	I4		I4	S4	I4	F4	I4	I4		S4	I4	F4	I4		PV
S1	I1	I1	I1	I1		I1	S1	I1	I1	I1	I1		S1	I1	I1	I1		S1
S1	I1	I1	I1	I1		I1	S1	I1	I1	I1	I1		S1	I1	I1	I1		S1
S1	I1	I1	I1	I1		I1	S1	I1	I1	I1	I1		S1	I1	I1	I1		S1
S1	I1	I1	I1	I1		I1	S1	I1	I1	I1	I1		S1	I1	I1	I1		S1
S4	I1	I1	PV	I1		NR	S4	I1	I1	I1	I1		S4	I2	I2	PV		S4
PV	NR	NR	PV	PV		NR	PV	NR	NR	PV	PV		PV	NR	NR	PV		NR
S4	4	4	PV	I4		PV	S4	I2	I2	I2	I2		S4	I2	2	PV		S4

Dudick

Key

Material will withstand constant flow or immersion service
Material is suitable for intermittent or Spillage service
Material will tolerate fumes only

	Light Duty Linings/Coatings						Toppings		Heavy Duty Linings			
Product Code	300	600	700	800	900	1000	300	800	600	700	800	900
Formaldehyde	F4	I4	I4	I4	I4	F4	S1	S1	I1	I1	I1	I1
Formic Acid	NR	S4	S4	S4	S4	PV	NR	S4	I4	I4	I4	I4
Fuel Oil 1 & 2	S4	I4	I4	I4	I4	NR	S1	S1	I1	I3	I1	I1
Furfural	NR	S4	S4	S4	S4	PV	PV	PV	NR	PV	PV	PV
Furfuryl Alcohol	PV	S4	S4	S4	S4	S4	S1	S1	I4	I4	I4	I4
Gasoline	I4	I4	I4	I4	I4	I4	S1	S1	I1	I1	I1	I1
Glucose	I4	I4	I4	I4	I4	I1	S1	S1	I1	I1	I1	I1
Gluconic Acid (50%)	PV	F4	S4	F4	S4	PV	PV	S4	S4	I4	S4	I4
Glycol	I4	I4	I4	I4	I4	I4	S1	S1	I1	I1	I1	I1
Glycolic Acid	NR	S4	S4	S4	S4	F1	S4	S4	I3	I3	I3	I3
Gold Plating (Cyanide)	S4	S1	NR	S1	S1	S1	S1	S4	I4	NR	I4	I3
Grape Juice	I3	I3	I3	I3	I3	I1	S1	S1	I1	I1	I1	I1
Green Liquor	S4	I4	NR	I4	I3	I1	S1	S3	I1	NR	I1	I1
Heptane	S4	S1	S1	S1	S1	I4	S1	S1	I2	I2	I2	I2
Heptanoic Acid	PV	S4	S4	S4	S4	F1	PV	I3	I3	I3	I3	I3
Hexane	F4	S1	S1	S1	S1	I4	S1	S1	I2	I2	I2	I2
Hydrazine (35%)	PV	NR	NR	NR	NR	NR	S4	S4	NR	NR	NR	NR
Hydraulic Fluid	PV	PV	PV	PV	I3	PV	S1	S1	PV	PV	PV	I1
Hydriodic Acid (20%)	F4	S4	S4	S4	S4	S1	PV	S4	I4	I4	I4	I4
Hydrobromic Acid (20%)	F4	S4	S4	S4	S4	S1	PV	S4	I4	I3	I4	I4
Hydrocarbons (Aliphatic)	PV	I4	I4	I4	I4	I1	S1	S4	I1	I1	I1	I1
Hydrocarbons (Aromatic)	PV	PV	PV	PV	F4	NR	S4	S4	PV	PV	PV	I1
Hydrochloric Acid (1-25%)	F4	S3	S3	S3	S3	F1	S4	S4	I1	I3	I1	I1
Hydrochloric Acid (25-37%)	NR	F3	F3	F3	F3	F1	S4	S4	PV	PV	PV	I2
Hydrofluoric Acid (1-10%)*	NR	F3	NR	NR	F3	NR	NR	NR	NR	NR	NR	NR
Hydrofluoric Acid (10-53%)*	NR	F4	NR	NR	F4	NR	NR	NR	NR	NR	NR	NR
Hydrofluosilicic Acid*	F4	F3	NR	NR	F3	PV	NR	NR	I2	I2	PV	NR
Hydrogen Bromide	PV	PV	PV	PV	F1	PV	PV	S4	PV	PV	PV	I4
Hydrogen Peroxide (30%)	NR	PV	PV	PV	F4	PV	NR	S4	PV	PV	PV	I4
Hydrogen Sulfide	S4	I4	I4	I4	I3	I1	S1	S1	I1	I1	I1	I1
Hypochlorous Acid	NR	NR	NR	NR	F3	NR	NR	NR	NR	NR	NR	NR
Iodine	NR	F4	F4	F4	F3	F1	PV	S4	I4	I4	I4	I3
Insecticides	PV	PV	PV	PV	F4	PV	PV	S3	PV	PV	PV	I3
Isophorone	PV	PV	PV	PV	PV	PV	S4	PV	I4	I4	I4	I4
Isopropyl Acetate	NR	NR	NR	NR	NR	PV	S4	NR	PV	NR	PV	S4
Isopropyl Alcohol	S4	PV	PV	PV	S4	PV	S1	S1	I1	I1	I1	I1
Isopropyl Amine	PV	PV	PV	PV	F4	NR	PV	NR	PV	I4	PV	S4
Isopropyl Ether	S4	PV	PV	PV	F4	NR	S4	S4	I4	I4	I4	I4
Jet Fuel	I4	I4	I4	I4	I4	F1	S1	S1	I1	I1	I1	I1
Kaolin	I1	PV	NR	PV	I1	I1	I1	I1	PV	NR	PV	I1
Kerosene	I4	I4	I4	I4	I4	I1	S1	S1	I1	I1	I1	I1
Lasso Herbicide (10%)	PV	S4	S4	S4	S4	F4	PV	S4	I4	I4	I4	I4
Lactic Acid (1-20%)	F4	I4	I4	I4	I4	S1	S4	S1	I1	I1	I1	I1
Lactic Acid (20%-Con)	NR	S4	S4	S4	I4	S1	NR	S4	I4	I3	I3	I3
Lauric Acid	PV	I4	I4	I4	I3	S1	NR	S1	I1	I1	I1	I1
Lead Acetate	I4	I4	I4	I4	I3	F1	S1	S1	I1	I1	I1	I1
Linseed Oil	S3	I1	I1	I1	I1	I1	S4	S1	I1	I1	I1	I1
Magnesium Sulfate	I1	I1	I1	I1	I1	I1	S1	S1	I1	I1	I1	I1
Maleic Acid	S3	S3	S3	S3	S1	S1	S1	S4	I3	I3	I3	I1
Manganese Salts	I4	I4	I4	I4	I4	I1	S1	S1	I1	I1	I1	I1
Mercury Salts	I4	I4	S4	I4	I4	I1	S1	S1	I1	S1	I1	I1
Methyl Alcohol	NR	PV	PV	PV	F4	S4	S4	S1	I4	I4	I4	I4
Methyl Acetate	NR	NR	NR	NR	F4	PV	S3	S4	PV	NR	PV	PV
Methylene Chloride	NR	NR	NR	NR	NR	NR	NR	NR	NR	NR	NR	NR
Methyl Chloride	NR	NR	NR	NR	NR	NR	NR	NR	NR	NR	NR	NR
Methyl Ethyl Ketone	NR	NR	NR	NR	NR	NR	PV	NR	PV	NR	PV	NR
Methyl Isobutyl Ketone	NR	NR	NR	NR	NR	NR	S4	S4	PV	NR	PV	NR
Milk Products	I1	I1	I1	I1	I1	I1	S1	S1	I1	I1	I1	I1

1 Good to the maximum temperature of the product
2 High temperature service to 160°F (71°C)
3 Moderate Temperature Service to 140°F (60°C)
4 Warm Temperature Service to 100°F (37°C)

PV Performance varies with conditions. Consult Dudick for recommendations or testing
NR Not recommended
NI No information available

Linings/Toppings					Toppings/Linings						Tiled Vessel Linings				Grouts
Protecto-Glass					Protecto-Line						Protecto-Seal				Grouts
300	600	700	800	900	100	300	600	700	800	900	300	600	700	800	100
S1	1	1	1	1	1	S1	1	1	1	1	S1	1	1	1	S1
NR	4	4	4	4	NR	NR	4	4	4	4	NR	4	4	4	NR
S1	4	4	4	3	1	S1	1	3	1	1	S1	1	3	1	S1
PV	PV	PV	PV	PV	PV	PV	NR	PV	PV	PV	PV	NR	PV	PV	PV
S1	4	4	4	4	4	S1	4	4	4	4	S1	4	4	4	S4
S1	1	1	1	1	1	S1	1	1	1	1	S1	1	1	1	1
S1	1	1	1	1	1	S1	1	1	1	1	S1	1	1	1	1
PV	S4	S4	S4	S4	PV	PV	S4	4	4	4	PV	S4	4	S4	
S1	1	1	1	1	1	S1	1	1	1	1	S1	1	1	1	S1
S4	3	3	3	3	NR	S4	3	3	3	3	S4	3	3	3	NR
S1	4	NR	4	3	1	S1	4	NR	4	3	S1	4	NR	4	S1
S1	1	1	1	1	1	S1	1	1	1	1	S1	1	1	1	S1
S1	1	NR	1	1	1	S1	1	NR	1	1	S1	1	NR	1	S1
S1	3	3	3	3	1	S1	3	3	3	3	S1	2	2	2	S1
PV	3	3	3	3	PV	PV	3	3	3	3	PV	3	3	3	PV
S1	3	3	3	3	1	S1	2	2	2	2	S1	2	2	2	S1
S4	NR	NR	NR	NR	4	S4	NR	NR	NR	NR	S4	NR	NR	NR	S4
PV	PV	PV	PV	1	1	PV	PV	PV	PV	1	PV	PV	PV	PV	
PV	4	4	4	4	NR	PV	4	4	4	4	PV	4	4	4	NR
PV	4	3	4		NR	PV	4	3	4	4	PV	4	3	4	NR
S1	1	1	1	1	1	S1	1	1	1	1	S1	1	1	1	S1
S4	PV	PV	4	1	4	S4	PV	PV	4	1	S4	PV	PV	PV	F4
S4	3	3	3	3	4	S4	3	3	3	3	S4	3	3	3	S4
S4	PV	PV	PV	4	S4	S4	PV	PV	S3	S3	S4	PV	PV	PV	S4
S4	NR	NR	NR	NR	PV	S4	4	4	2	2	S4	NR	NR	NR	NR
NR	NR	NR	NR	NR	PV	NR	4	4	S4	S4	NR	NR	NR	NR	NR
S4	2	2	PV	2	PV	S4	2	2	2	2	S4	2	2	PV	S4
S4	PV	PV	PV	S4	PV	PV	PV	PV	S4	S4	PV	PV	PV	PV	S4
PV	PV	PV	PV	4	PV	PV	PV	PV	S1	S1	PV	PV	PV	PV	S4
S1	1	1	1	1	2	S1	1	1	1	1	S1	1	1	1	S3
NR	NR	NR	NR	S3	NR	NR	PV	4	4	3	NR	NR	NR	NR	NR
PV	4	4	4	3	PV	PV	4	4	4	3	PV	4	4	4	S4
S4	PV	PV	PV	3	S1	S4	PV	PV	S1	S1	PV	PV	PV	PV	S4
S4	4	4	4	4	4	S4	4	4	4	4	S4	4	4	4	S4
S4	PV	NR	PV	4	PV	S4	PV	NR	S4	4	S4	PV	NR	PV	NR
S1	1	1	1	1	1	S1	1	1	1	1	S1	1	1	1	S3
S4	PV	4	PV	4	S3	S4	PV	4	4	4	PV	PV	4	PV	S4
S4	4	4	4	4	4	S4	4	4	4	4	S4	4	4	4	S4
S1	1	1	1	1	1	S1	1	1	1	1	S1	1	1	1	S2
S1	PV	NR	PV	1	1	1	PV	NR	1	1	1	PV	NR	PV	1
S1	1	1	1	1	1	S1	1	1	1	1	S1	1	1	1	S2
S4	4	4	4	4	4	S4	4	4	3	3	PV	4	4	4	S4
S4	1	1	1	1	S4	S4	1	1	1	1	S4	1	1	1	NR
NR	4	3	3	3	NR	NR	4	3	3	3	NR	4	3	3	NR
PV	1	1	1	1	S4	PV	1	1	1	1	PV	1	1	1	S3
S1	1	1	1	1	1	S1	1	1	1	1	S1	1	1	1	S1
S4	1	1	1	1	PV	S4	1	1	1	1	S4	1	1	1	S4
S1	1	1	1	1	1	S1	1	1	1	1	S1	1	1	1	S
S3	3	3	3	1	2	S3	3	3	3	1	S3	3	3	3	S3
S1	1	1	1	1	1	1	1	1	1	1	S1	1	1	1	S1
S1	1	S1	1	1	1	S1	1	S1	1	1	S1	1	S1	1	S1
S4	4	4	4	4	4	S4	4	4	4	4	S4	4	4	4	S4
S4	PV	NR	PV	PV	PV	S4	PV	NR	S3	S3	S4	PV	NR	PV	PV
NR	NR	NR	NR	NR	NR	NR	NR	NR	NR	NR	NR	NR	NR	NR	NR
NR	NR	NR	NR	NR	NR	NR	NR	NR	NR	NR	NR	NR	NR	NR	NR
S4	PV	NR	PV	NR	4	S4	PV	NR	S4	S4	S4	PV	NR	PV	NR
S4	PV	NR	4	NR	4	S4	PV	NR	S4	S4	S4	PV	NR	PV	NR
S1	1	1	1	1	1	1	1	1	1	1	S1	1	1	1	S1

Dudick

Key

Material will withstand constant flow or immersion service
Material is suitable for intermittent or Spillage service
Material will tolerate fumes only

	Light Duty Linings/Coatings						Toppings		Heavy Duty Linings			
	300	600	700	800	900	1000	300	800	600	700	800	900
Mineral Oil	I4	I4	S4	I4	I4	S4	S1	S1	I1	I1	I1	I1
Molasses	I1	I1	I1	I1	I1	I1	S1	S1	I1	I1	I1	I1
Naphalene	S4	S4	S4	S4	S3	S4	S4	S4	I4	I4	I4	I3
Naphtha	S4	I4	I4	I4	I3	I4	S1	S1	I3	I1	I1	I1
Naphthenic Acid	PV	I4	I4	I4	PV	PV	S4	PV	I4	I4	I4	PV
Nickel Chloride	S4	S4	S4	S4	S4	S4	S1	S1	I1	I3	I1	I1
Nickel Plating (Bright)	S4	S4	S4	S4	S4	I4	S1	S1	I1	I1	I1	I1
Nickel Salts	S4	I4	I4	I4	I3	I4	S1	S1	I1	I1	I1	I1
Nitric Acid (5%)	S4	S3	S3	S3	S3	S4	S4	S1	I3	I1	I3	I2
Nitric Acid (10%)	S4	S3	S3	S3	S3	S4	S4	S1	I3	I2	I3	I2
Nitric Acid (20%)	NR	F4	F4	F4	F4	NR	NR	S2	I4	I3	I4	I4
Nitric Acid (40%)	NR	F4	F4	F4	F4	NR	NR	S4	I4	I4	I4	I4
Nitric Acid (60%)	NR	NR	NR	NR	F4	NR	NR	S4	S4	S4	S4	S4
Nitric Acid (Conc.)*	NR	NR	NR	NR	F4	NR	NR	NR	NR	F4	NR	F4
Nitrobenzene	NR	NR	NR	NR	NR	NR	PV	NR	PV	PV	PV	PV
Nitrous Acid	NR	PV	PV	PV	PV	PV	PV	S3	I3	I1	I3	I2
Octanoic	F4	S4	NR	S4	S3	PV	PV	S3	I4	NR	I4	I4
Oils (Animal)	I1	I1	I1	I1	I1	I1	S1	S1	I1	I1	I1	I1
Oils (Mineral)	I1	I1	I1	I1	I1	I1	S1	S1	I1	I1	I1	I1
Oils (Vegetable)	I1	I1	I1	I1	I1	I1	S1	S1	I1	I1	I1	I1
Oleic Acid	NR	I4	I4	I4	I3	NR	S4	S1	I1	I1	I2	I1
Oxalic Acid (Sat'd)	S4	I4	I4	I4	I3	S1	S1	S1	I3	I1	I1	I1
Ozone	PV	PV	PV	PV	I2	S3	S1	S1	PV	S4	PV	S4
Palmitic Acid	PV	S4	PV	S4	S3	PV	PV	S4	I1	PV	I1	I1
Pentachlorethane	PV	PV	PV	PV	S1	PV	S1	S4	PV	PV	PV	S1
Perchloric Acid	NR	PV	PV	PV	F4	PV	S1	S1	PV	PV	PV	PV
Perchlorethylene	NR	NR	NR	NR	F4	NR	S4	S4	I4	I4	PV	S4
Phenol (0%-10%)	NR	PV	PV	PV	F4	NR	S4	S2	PV	NR	PV	PV
Phenol (85%)	NR	NR	NR	NR	F4	NR	PV	PV	NR	NR	NR	PV
Phosphoric Acid (Conc.)	NR	S3	S3	S3	S1	NR	NR	S1	I1	I1	I1	I1
Phosphorous Oxychloride	NR	PV	PV	PV	F4	PV	S4	S4	PV	F4	PV	PV
Phosphorous Trichloride	NR	PV	PV	PV	F4	PV	S4	PV	PV	F4	PV	PV
Phthalic Acid	PV	S1	PV	S1	S1	PV	PV	S1	I1	PV	I1	I1
Potassium Bichromate	S4	I4	I4	I4	I4	S4	S4	S1	I4	I1	I4	I1
Potassium Bromate	S4	I4	I4	I4	I4	I4	S4	S1	I4	I4	I4	I4
Potassium Bromide	S4	I4	I4	I4	I4	I4	PV	S1	I1	I1	I1	I1
Potassium Carbonate	I4	PV	PV	PV	I4	I4	S1	S1	I4	NR	I4	I4
Potassium Chlorate	S4	I4	I4	I4	I4	I4	S1	S1	I1	I1	I1	I1
Potassium Chloride	I4	I4	I4	I4	I3	I4	S1	S1	I1	I1	I1	I1
Potassium Cyanide	S4	I4	I4	I4	PV	I4	S1	S1	I1	I1	I1	I1
Potassium Hydroxide (10%)*	I4	S1	NR	S1	I4	I4	S1	S1	I4	NR	I4	I4
Potassium Hydroxide (Conc.)*	S4	NR	NR	NR	S4	S1	S1	S1	NR	NR	NR	NR
Potassium Nitrate	I4	I4	I4	I4	I3	I1	S1	S1	I1	I1	I1	I1
Potassium Permanganate	I4	I4	I4	I4	I3	S1	S1	S1	PV	I1	I1	I1
Potassium Peroxide	S4	S4	S4	S4	PV	F4	S1	PV	I4	PV	I4	I4
Potassium Persulfate	S4	I4	I4	I4	I3	S1	S1	S1	I1	I1	I1	I1
Potassium Sulfate	I4	I4	I4	I4	I3	I1	S1	S1	I1	I1	I1	I1
Pulpstock Chlorinated	NR	NR	S1	NR	S4	NR	NR	S4	NR	I1	NR	NR
Propionic Acid	NR	NR	NR	NR	F4	NR	PV	PV	PV	NR	NR	PV
Propylene Glycol	NR	I3	I3	I3	I3	I4	S4	S4	I4	I4	I4	I3
Pyridine	NR	NR	NR	NR	NR	NR	NR	NR	NR	NR	NR	NR
Salicylic Acid	S1	I4	I4	I4	I4	I4	S1	S1	I1	I1	I1	I1
Seawater	I1	I1	I1	I1	I1	I1	S1	S1	I1	I1	I1	I1
Silver Nitrate	S1	S1	S1	S1	S1	PV	S1	S1	I1	I1	I1	I1
Sodium Acetate	I4	I4	I4	I4	I4	I4	S1	S1	I1	I1	I1	I1
Sodium Bicarbonate	I4	I4	I4	I4	I4	I1	S1	S1	I1	I1	I1	I1
Sodium Bisulfate	I4	I4	I4	I4	I4	I4	S1	S1	I1	I1	I1	I1
Sodium Bisulfite	I4	I4	I4	I4	I4	I4	S1	S1	I1	I1	I1	I1

*May need synthetic fabric, carbon fillers or HP-207 topcoat. Consult a Dudick

1 Good to the maximum temperature of the product
2 High temperature service to 160°F (71°C)
3 Moderate Temperature Service to 140°F (60°C)
4 Warm Temperature Service to 100°F (37°C)

PV Performance varies with conditions. Consul Dudick for recommendations or testing
NR Not recommended
NI No information available

Linings/Toppings					Toppings/Linings						Tied Vessel Linings				Grouts
Protecto-Glass	300	600	700	800	900	Protecto-Therm	100	300	600	700	800	900	Protecto-Glass	300	600	700	800	Protecto-Therm	100
S1	I1	I1	I1	I1	I1	I1	I1	I1	I1	I1	I1	I1	I1	I1	I4	I1	S1
S1	I1	I1	I1	I1	I1	I1	I1	I1	I1	I1	I1	I1	S1	I1	I1	I1	S1
S4	I4	I4	I4	I3	I4	S4	I4	I4	I4	I3	S4	I4	I4	I4	S4
S4	I3	I1	I1	I1	I1	S4	I3	I1	I1	I1	S4	I3	I1	I3	S4
PV	I4	I4	I4	I4	I4	PV	I4	I4	I4	PV	PV	I4	I4	I4	PV
S1	I1	I1	I1	I1	I1	I1	I1	I1	I1	I1	I1	I1	I1	I1	S1
S3	I1	I1	I1	I1	I1	I1	S3	I1	I1	I1	I1	S3	I1	I1	S3
S1	I1	I1	I1	I1	I1	I1	I1	I1	I1	I1	I1	S1	I1	I1	S1
S4	I3	I1	I1	I1	NR	S4	I3	I1	I3	I1	S4	I3	I4	I3	NR
S4	I3	I2	I1	I1	NR	S4	I3	I2	I3	I2	S4	I3	I2	I3	NR
NR	I4	I3	I4	I3	NR	NR	I4	I3	I4	I3	NR	I4	I3	I4	NR
NR	I4	I4	I4	I4	NR	NR	I4	I4	I4	I4	NR	I4	I4	I4	NR
NR	S4	S4	S4	S4	NR	NR	S1	S1	S1	S1	NR	S4	S4	S4	NR
NR	NR	F4	NR	F4	NR	NR	NR	NR	NR	F4	NR	NR	F4	NR	NR
PV	PV	PV	PV	PV	PV	PV	PV	PV	PV	F4	PV	PV	PV	PV	NR
PV	I3	I1	I3	I1	PV	PV	I3	I1	I3	I1	PV	I3	I1	I3	NR
PV	I4	NR	I4	PV	PV	PV	I4	NR	I4	I4	PV	I4	NR	I4	PV
S4	I1	I1	I1	I1	I1	I1	I1	I1	I1	I1	S4	I1	I1	I2	S3
S1	I1	I1	I1	I1	I1	I1	I1	I1	I1	I1	S1	I1	I1	I2	S1
S3	I1	I1	I1	I1	I1	I1	I1	I1	I1	I1	S3	I1	I1	I2	S1
S4	I1	I1	I1	I1	NR	S4	I1	I1	I2	I1	S4	I1	I1	I2	NR
S1	I3	I1	I1	I1	PV	S1	I3	I1	I1	I1	S1	I3	I1	I1	S1
S1	PV	S4	S4	S4	S1	S1	PV	S4	I2	I1	S1	PV	S4	PV	NR
PV	I1	PV	I1	I1	PV	PV	I1	PV	I1	I1	PV	I1	PV	I1	S4
S4	PV	PV	PV	PV	PV	S1	PV	PV	PV	S1	S4	PV	PV	PV	S4
NR	PV	PV	PV	PV	PV	S1	PV	PV	PV	PV	NR	PV	PV	PV	NR
S4	I4	I4	PV	PV	I4	S4	I4	I4	PV	I4	S4	I4	I4	PV	S4
S4	PV	NR	PV	PV	PV	S4	PV	NR	S2	S2	S4	PV	NR	PV	S4
PV	NR	NR	NR	PV	NR	PV	NR	NR	F4	S4	PV	NR	NR	NR	NR
NR	I1	I1	I1	I1	NR	NR	I1	I1	I1	I1	NR	I1	I1	I1	NR
S4	PV	F4	PV	PV	I3	S4	PV	F4	PV	PV	S4	PV	F4	PV	S4
S4	PV	F4	PV	PV	I3	S4	PV	F4	PV	PV	S4	PV	F4	PV	S4
S4	I1	PV	I1	I1	PV	PV	I1	PV	I1	I1	S4	I1	PV	I1	NR
S4	I4	I1	I1	I1	I4	S4	I4	I1	I4	I1	S4	I4	I1	I4	S3
S4	I4	I4	I4	I4	PV	S4	I1	I1	I1	I1	S4	I4	I4	I4	S4
S4	I1	I1	I1	I1	PV	S4	I1	I1	I1	I1	S4	I1	I1	I1	S4
S1	I4	NR	I4	I4	I1	S1	I4	NR	I4	I4	S1	I4	NR	I4	S1
S1	I1	I1	I1	I1	I3	S1	I1	I1	I1	I1	S1	I1	I1	I1	S1
S1	I1	I1	I1	I1	I1	S1	I1	I1	I1	I1	S1	I1	I1	I1	S1
S1	I1	I1	I1	I1	I1	S1	I1	I1	I1	I1	S1	I1	I1	I1	S1
S1	I4	NR	I4	I4	I1	S1	I4	NR	I4	I4	S1	I4	NR	I4	S1
S1	NR	NR	NR	NR	I1	S1	NR	NR	NR	I4	S1	NR	NR	NR	S1
S1	I1	I1	I1	I1	I1	S1	I1	I1	I1	I1	S1	I1	I1	I1	S1
S1	PV	I1	I1	I1	I1	S1	PV	I1	I1	I1	S1	PV	I1	I1	S1
S1	I4	PV	I4	I4	PV	S1	I4	PV	I4	I4	S1	I4	PV	I4	S3
S1	F1	F1	F1	F1	PV	S1	I1	I1	I1	I1	S1	I1	I1	I1	S1
S1	I1	I1	I1	I1	I1	S1	I1	I1	I1	I1	S1	I1	I1	I1	S1
NR	NR	I1	NR	NR	NR	NR	NR	I1	NR	NR	NR	NR	I1	NR	NR
PV	PV	NR	NR	PV	NR	PV	PV	NR	NR	PV	PV	PV	NR	NR	NR
I4	I4	I4	I4	I3	I4	I4	I4	I4	I4	3	I4	I4	I4	I4	I4
NR	NR	NR	NR	NR	NR	NR	NR	NR	NR	NR	NR	NR	NR	NR	NR
S1	I1	I1	I1	I1	I3	S1	I1	I1	I1	I1	S1	I1	I1	I1	S1
S1	I1	I1	I1	I1	I1	S1	I1	I1	I1	I1	S1	I1	I1	I1	S1
S1	I1	I1	I1	I1	S1	S1	I1	I1	I1	I1	S1	I1	I1	I1	S4
S1	I1	I1	I1	I1	I1	S1	I1	I1	I1	I1	S1	I1	I1	I1	S1
S1	I1	I1	I1	I1	I1	S1	I1	I1	I1	I1	S1	I1	I1	I1	S1
S1	I1	I1	I1	I1	I1	S1	I1	I1	I1	I1	S1	I1	I1	I1	S1
S1	I1	I1	I1	I1	I1	S1	I1	I1	I1	I1	S1	I1	I1	I1	S1

ick

Key

Material will withstand constant flow or immersion service
Material is suitable for intermittent or Spillage service
Material will tolerate fumes only

...ons. Cons
...testing

	Light Duty Linings/Coatings						Toppings		Heavy Duty Linings				Grouts
	Protecto Coat 300	600	700	800	900	1000	Protecto Crete 300	800	Protecto Fate 600	700	800	900	
...ate	I4	4	I4	4	I4	I1	S1	S1	I1	I1	I1	1	
...onate	I4	PV	PV	PV	I4	I1	S1	S4	I3	PV	I4	3	
...ate	PV	I4	I4	I4	4	4	S1	S1	I1	I1	I1	I1	
...ide	I1	I1	I1	I1	1	1	S1	S1	I1	I1	I1	I1	
...te (50%)	NR	S4	S4	S4	S3	S4	S4	S4	I4	I4	I4	3	
...nate	S4	4	I4	I4	3	S4	S1	S1	PV	I1	PV	1	
...ide	S4	I4	I4	I4	I3	I4	S1	S1	I1	I1	I1	I1	
...omate	S4	I4	I4	I4	I3	4	S1	S1	PV	I4	I4	I3	
...ide*	S4	NR	NR	NR	4	PV	S4	S4	NR	NR	NR	NR	
...oxide (10%)*	I4	S1	NR	S1	I1	I1	S1	S1	I4	NR	I4	I1	
...oxide (50%)*	S4	NR	NR	NR	I1	I1	S1	S4	NR	NR	NR	I1	
...chlorite (3%)*	F4	NR	NR	S4	S4	F1	S3	S1	NR	NR	I4	I3	
...chlorite (17%)*	NR	NR	NR	PV	S4	NR	S4	S4	NR	NR	PV	S4	
...ide	I4	4	I4	4	4	1	S4	NR	PV	NR	PV	S4	
...onate	S4	I4	I4	I4	I4	I1	S1	S1	I1	I1	I1	I1	
...ate	I4	I4	I4	I4	4	I1	S1	S1	I1	I1	I1	I1	
...de	I4	PV	PV	PV	I4	I1	S1	S1	I4	PV	I4	I4	
...te	I4	I4	I4	I4	I4	I1	S1	S1	I1	I1	I1	I1	
...rate	I4	I4	I4	I4	I4	I1	S1	S1	I1	I1	I1	I1	
...lfate (Hypo)	I4	I4	I4	I4	I3	S1	S1	S1	I1	I1	I1	I1	
	PV	I4	I4	I4	I3	I1	PV	S1	I1	I1	I1	I1	
	S4	PV	PV	PV	I4	PV	S4	S1	I2	I2	I2	I2	
	I4	PV	PV	PV	I4	PV	S3	S3	I4	I4	I4	I4	
	I1	I1	I1	I1	I1	I1	S1	S1	I1	I1	I1	I1	
...r (Paper)	I4	I4	PV	I4	I4	I1	S1	S1	I1	PV	I1	I1	
...te	F1	S4	S4	S4	S4	I1	S1	S1	F4	I1	I1	I1	
...te	F4	PV	PV	PV	PV	S1	S1	S1	I4	I4	I4	I4	
...(2%-20%)	S4	S2	S2	S2	S2	S2	S3	S1	I1	I1	I1	I1	
...(20%-50%)	F4	S2	S2	S2	S2	F1	S4	S1	I3	I3	I3	I2	
...(50%-70%)	F4	F3	F3	F3	F2	F4	NR	NR	I4	I4	I4	2	
...(70%-80%)	NR	PV	PV	PV	F4	NR	NR	NR	PV	PV	PV	I4	
...(80%-98%)	NR	PV	PV	PV	F4	NR	NR	NR	NR	NR	NR	NR	
...id	S4	I4	I4	I4	I4	S4	S1	S1	I1	I1	I1	1	
	I4	4	I4	I4	4	1	PV	S1	I1	I1	I1	1	
	PV	I4	I4	I4	I4	PV	PV	S4	I1	I1	I1	I1	
	I4	I4	I4	I4	I3	S1	S1	S1	I1	I1	I1	I1	
...hane	PV	NR	NR	NR	F4	NR	S4	NR	PV	PV	PV	PV	
...ride	NR	NR	NR	NR	NR	NR	NR	NR	NR	NR	NR	NR	
...rachloride	F4	I4	I4	I4	I3	S4	S1	S1	I1	I1	I1	I1	
	NR	NR	NR	NR	F4	NR	PV	NR	I4	PV	I4	PV	
...phonic Acid	S3	I4	I4	I4	I3	S4	S1	S1	I1	I1	I1	I1	
...ic Acid (20%)	NR	F4	F4	F4	4	F4	NR	S1	I4	I4	I4	4	
...ene	NR	NR	NR	NR	F4	NR	PV	NR	PV	NR	PV	PV	
...osphate	I4	4	NR	I4	I4	I4	S1	S4	I3	NR	I3	3	
	S4	PV	PV	PV	F4	NR	S1	NR	PV	PV	PV	PV	
...ctants	PV	4	I4	I4	I4	PV	S1	S1	I1	I1	1	I1	
...ons	I4	I4	I4	I4	I4	I4	S1	S1	I1	I1	I1	1	
	F4	I1	I1	I1	I1	I4	S1	S1	I1	I1	1	1	
...ed & demineralized	I4	4	I4	I4	4	I4	S1	S1	I1	I1	I1	I1	
...(Paper)	I4	I4	PV	I4	3	I4	S1	S1	I1	PV	1	1	
	NR	NR	NR	NR	NR	NR	PV	NR	I4	PV	4	I4	
	I4	4	I4	4	3	4	S1	S1	I1	1	I1	1	
...id Sulfate)	S3	I4	I4	I4	I3	S1	S1	S1	I1	I1	1	1	

*May need synthetic fabric, carbon fillers or HP-201 topcoat. Consult a Dudick Corrosion-Proof, Inc. technical representative for more complete information on

Temperature Limits

Product	Substrate				Notes
Series (Chemical Property)	F°	C°	F°	C°	
Protecto-Coat	*Metal*		*Concrete/Steel*		
300 (Adduct Cured Epoxy)	100	37[1]	100	37[2]	[1] Steel: Constant Flow; Steel Dry or Intermittent Spills: 200°F (93°C) to 350°F (96°C)
600 (Bisphenol Polyester)	130	54	130	54	[2] Concrete: Constant Flow
700 (Halogenated Polyester)	130	54	130	54	
800 (Vinyl Ester)	130	54	130	54	
900 (High Molecular Weight Vinyl Ester)	130	54	130	54	
1000 (Coal Tar)	130	54	130	54	
Protecto-Crete	*Metal*		*Concrete*		
300 (Adduct Cured Epoxy)	Not Recommended		300	150[3]	[3] Intermittent Spills, otherwise maximum temperature is 150°F
800 (Vinyl Ester)	Not Recommended		250	120	
Protecto-Flake	*Metal*[4]		*Concrete*		
600 (Bisphenol Polyester)	180	83	160	71	[4] Metal: Immersion; Dry Metal: 250°F (121°C)
700 (Halogenated Polyester)	180	83	160	71[4]	
800 (Vinyl Ester)	180	83	160	71	
900 (High Molecular Weight Vinyl Ester)	180	83	160	71	
Protecto-Glass	*Metal*[5]		*Concrete*		
300 (Adduct Cured Epoxy)	150	65	250	121	[5] Steel: Constant Flow
600 (Bisphenol Polyester)	160	71	140	60	
700 (Halogenated Polyester)	160	71	140	60	
800 (Vinyl Ester)	160	71	140	60	
Protecto-Line	*Metal*[6]		*Concrete*[7]		
100 (Amine Cured Epoxy)	180	82	160	71	[6] Steel: Constant Flow and Immersion
300 (Adduct Cured Epoxy)	160	71	160	71	[7] Concrete: Constant Flow
600 (Bisphenol Polyester)	160	71	160	71	
700 (Halogenated Polyester)	160	71	160	71	
800 (Vinyl Ester)	160	71	160	71	
900 (High Molecular Weight Vinyl Ester)	160	71	160	71	
Protecto-Seal	*Metal*[8]		*Tile/Concrete*[8]		
300 (Adduct Cured Epoxy)	160	71	160	71	[8] Steel Tile: Constant Flow and Immersion
600 (Bisphenol Polyester)	180	83	180	83	
700 (Halogenated Polyester)	180	83	180	83	
800 (Vinyl Ester)	180	83	180	83	
Grouts	*Metal*		*Concrete*		
100 (Amine Cured Epoxy)	Not Applicable		160	71	
600 (Bisphenol Polyester)*	Not Applicable		160	71[9]	[9] Grout 600/700 pours not to exceed 2 inches in depth
700 (Halogenated Polyester)*	Not Applicable		160	71[9]	

* *Note:* For more information on Grouts 600 and 700, please consult with a Dudick technical representative.

Products

There is a Dudick Corrosion-Proof product to protect virtually any area of a plant and any piece of production, storage or handling equipment from the corrosive effects of moisture and chemical attack.

Seven standard product lines are available and each offers a range of products developed to meet the special requirements encountered in most manufacturing or processing environments. However, any product in any system can be modified to tailor the physical, mechanical, environmental or application properties to the unique needs of a specific application.

A series of catalogs is available descrit the specific properties of each product each of these systems. Of course, our factory personnel are available to work with your architect, or plant managem engineering, and maintenance personn to recommend a standard or custom fo mulated Dudick Corrosion-Proof produ that meets your exact performance an durability requirements.

1.

Protecto-Coat, a series of high-build, glass-flake filled coatings for fast economical application by brush, roller or spray. Corrosion protection can range from mild atmospheric exposures to immersion, depending on the resin base and the finished DFT.

2.

Protecto-Crete, an unreinforced monolithic floor topping of amine addu cured epoxy. It is several times stronge than concrete and resistant to dilute chemical spills.

3.

Protecto-Flake, a series of heavily glass-flake filled, trowel applied tank linings especially suitable for continuous immersion in high concentrations at high temperature. Two fire retardant grades are available as standard products in this system, as well as offering FDA approval for food contact.

4.

Protecto-Glass systems use the origina glass mat reinforcement principal to achieve good corrosion resistance to a broad range of chemical elements incl ing oxidizing agents and hot alkalis.

5.

Protecto-Line, a reinforced monolithic vessel lining or floor topping system offering FDA approval. A variety of resins, reinforcing fabrics and curing agents provide chemical resistance ranging from mild ambient exposures to hot spills of strong acids.

6.

Protecto-Seal, a series of reinforced til chest relining products developed espe cially for the needs of the pulp and pa industry. A choice of epoxy, polyester vinyl ester resin formulations provides chemical protection from pH 1-14..

Grouts provide the superior corrosion p tection and high compressive strength permanently anchor heavy equipment.

APPENDIX D-10, DATA SHEET #2

TECHNICAL SPECIFICATION FOR COATING SYSTEMS
MANUFACTURER'S RECOMMENDATION AND CHEMICAL COMPATIBILITY CHART

Dudick

Dudick, Inc.
Corrosion-Proof Products
1818 South Wason Drive
P.O. Box 2550
Streetsboro, Ohio 44241

216-562-1970
FAX 216-562-7638

November 27, 1991

Clean Harbors
722 East Lincoln Parkway
Exton, PA 19341

Attn: Mr. Bhupendra Patel

Subj: Concrete Floor Topping Project at
Chicago, Illinois Facility

Dear Mr. Patel:

Per our recent conversation, Dudick Inc. is pleased to confirm our recommendation to line this concrete floor area subject to heavy fork lift traffic and splash and spillage of methylene chloride, methyl chloride, chloroform, chlorophenol as well as all of the chemicals recommended in our applicable chemical resistance guide at ambient temperatures.

It is our understanding that the subject area will be cleaned within 24 hours after the spillage of the above chemicals.

Product Recommendation: Protecto-Crete 900

Protecto-Crete 900 is an unreinforced, monolithic floor topping system. This system is a heavy aggregate filled novolac epoxy based vinyl ester that is trowel applied at 1/4" on floors and 1/8" thick on walls to achieve a strongly bonded topping with excellent physical and mechanical strength and chemical resistance. An optional sealer coat may be applied for greater chemical resistance.

Enclosed please find a technical data bulletin detailing our Protecto-Crete 900 system.

Should you have any questions, please contact our manufacturer's representative listed below or this office directly.

Cordially yours,

Jay Kapasi

Jay Kapasi
District Sales Manager

JK:sea

cc: Tony Oswald
Steve Carrier

Dudick Inc.

Dudick Incorporated
Corrosion-Proof Products
1818 South Wason Drive
Streetsboro, Ohio 44241

216-562-1970
FAX No. 216-562-7638

Protecto-Crete 800/900

TROWEL-APPLIED, UNREINFORCED HIGH-DENSITY VINYL ESTER FLOOR TOPPING 1/4" (6.3 mm)

Protecto-Crete 800 is a high-performance vinyl ester floor topping designed for heavy truck traffic and abrasion resistance combined with excellent resistance to a variety of acids and caustics.

Protecto-Crete 900, in addition, will resist many of the organic solvents.

RECOMMENDED APPLICATIONS

- Food Processing Floors
- Plating Room Floors
- Pickling Room Floors
- Truck Loading Platforms
- Chemical Storage
- Dike Areas
- Aisleways
- Chemical Laboratories

CHEMICAL RESISTANCE

- Organic Acids
- Inorganic Acids
- Alkali Solutions
- Solvents (900 only)
- Oils
- Salts

A complete listing of substances and concentrations tested is available on request.

PHYSICAL PROPERTIES

Compressive Strength ASTM C579	11,000 PSI
Tensile Strength ASTM D638	1,800 PSI
Density	140 lbs./ft.^{3}
Flexural Strength ASTM C580	3,600 PSI
Thermal Shock Resistance	40°F-160°F

SPECIFICATIONS

Topping shall be a 1/4" thick unreinforced Bisphenol-A/Novolac vinyl ester material as manufactured by Dudick Inc. applied over primed concrete using a plasterer's trowel or screed. Application and installation shall be according to the manufacturer's recommendations.

THE PROTECTO-CRETE 800/900 SYSTEM

The Protecto-Crete 800/900 System uses a primer and a heavily aggregate-filled vinyl ester topcoat to achieve a strongly bonded monolithic topping with excellent physical and mechanical strength and chemical resistance.

Primer: The blasted or etched concrete surface must be primed to provide the "wetting out" required for good bonding. Priming is achieved with Primer 27 and Protecto-Crete 800/900 should be applied while the primer is still tacky.

Topcoat: The aggregate-filled, Protecto-Crete 800/900 topcoat develops a cured strength two to three times that of the concrete base to which it is applied to provide exceptional durability and prolong the life of the substrate from corrosion and mechanical abuse.

Pour the Protecto-Crete mix into a wheelbarrow and transport to each workman's area. Dump directly onto the primed concrete.

The mix should be spread with a plasterer's trowel or with (3-4 ft.) wood screeds. Final finish with a trowel.

To terminate work, square cut the topping and start with the next work period butting to this edge. Permanent terminating lines should be made into saw cuts in the concrete.

Allow Protecto-Crete to cure overnight before subjecting the area to foot traffic.

Allow to cure 1-2 days at 70°F before permitting truck traffic.

Pot Life and Cure Cycles:

Protecto-Crete 800/900		
Temperature	Pot Life	Cure Time
50°F	50-60 Min.	72 Hrs.
75°F	30-40 Min.	48 Hrs.
90°F	20-30 Min.	24 Hrs.

Do not attempt to store mixed material. Residual material should be properly disposed of at the end of each work period.

Recommended application temperatures should be between 50°F and 110°F substrate temperature.

Application of Protecto-Crete 800/900 in direct sunlight may lead to blistering, pinholes, or wrinkling in the floor topping due to outgassing of air in the concrete and high substrate temperatures.

CLEANING

Clean tools and equipment with S-10 Cleaning Solvent.

SHIPPING

The S-10 Cleaning Solvent is a red label item with a flash point of 52°F (PMCC). The Hardener is classified as Organic Peroxide and carries a yellow warning label. Protecto-Crete liquids are red label items and classified flammable.

STORAGE

Warning: All Dudick products classified by DOT labels as either white, yellow or red labels, must not mixed or stored together as an explosive reaction may occur.

Protecto-Crete Liquid and Hardener are flammable and an oxidizer, respectively, and should be stored in a cool, dry place, away from open flame, sparks and other hazards. Protecto-Crete 800/900 ingredients are stable for 3 months when properly stored under 75°F. Excessive heat may cause premature gelling and reduce available working time (pot life).

SAFETY

M.S.D.S. - Sheets must always be read before using products. Protecto-Crete systems are intended for application by experienced, professional personnel. Dudick Inc. can supply Protecto-Crete Systems supervision to help determine that the surface has been properly prepared, the ingredients correctly mixed, and the materials properly and safely applied.

If Protecto-Crete materials are to be applied by your own personnel or by a third-party contractor, please be sure that they are aware of the following safety precautions:

• Exposure to vinyl ester resins and hardeners may cause severe dermatitis reactions in some people. Cleanliness of the skin and clothing is critical and must be of paramount concern.

• Safety glasses, gloves, and suitable protective clothing must be worn at all times.

Dudick

Chemical Resistance

Corrosion Resistant Monolithics

Alka

3

NaCl

80%

Organic

O_3

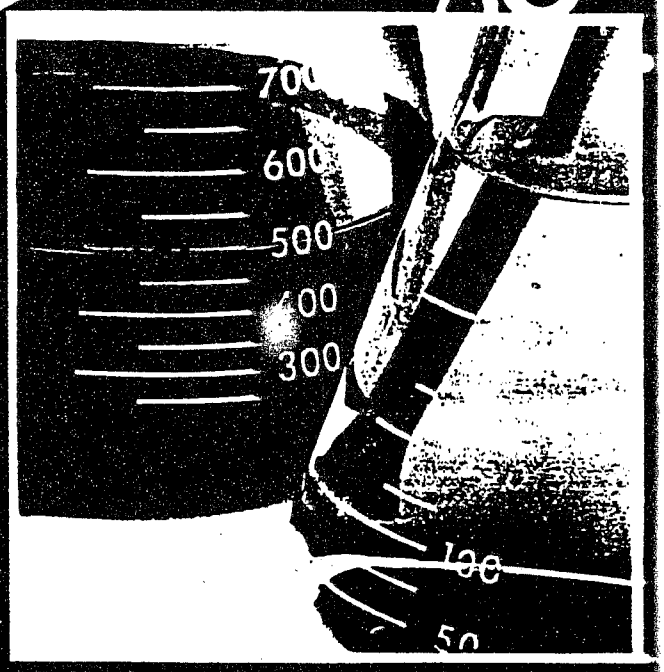

How to Use the Corrosion Guide

The corrosion resistant properties described in this Guide have been determined either by analysis (the typical ability of a resin to resist attack by a specific chemical substance), by testing, or by actual field performance experience. Thus, the ratings shown are useful in helping a potential user make a preliminary evaluation for further investigation.

Since most installations involving hostile chemical environments also involve dynamic processes which can vary widely from industry to industry and plant to plant, it is always necessary to consult the Dudick Corrosion-Proof factory for guidance before making a final selection.

This is especially critical when a chemical is not listed or where a combination of chemicals are present. Thorough testing in the Dudick laboratory using the actual chemicals under simulated processing or storage conditions is the only way to assure satisfactory in-use performance.

To simplify the information presentation, this Guide provides temperature limit data (page 12) and Chemical performance characteristics in separate charts. If an anticipated condition is not covered, please consult a Dudick Corrosion-Proof representative or the factory for additional information or to arrange an appropriate performance test.

Special Note

All technical data and recommendations presented here are believed to be reliable at the time of publication. Because field conditions can vary significantly, all data should be considered only as suggestions of possible applications. Dudick Corrosion-Proof, Inc. assumes no responsibility for results obtained or damages incurred from any use whether or not the use resulted from the recommendations in this Guide. Any recommendations or technical advice rendered is not to be taken as a license to operate under or intended to suggest the infringement of any existing patent. Liability, if any, is limited to replacement of products.

Temperature/Chemical Resistance Key

Indicator	Definition	Indicator	Definition	Indicator	Definition
I	Material will withstand constant flow or immersion service	1	Good to the maximum temperature of the product	*NR*	Not recommended
S	Material is suitable for intermittent or Spillage service	2	High Temperature Service to 160° F (71° C)	*NI*	No information available
F	Material will tolerate fumes only	3	Moderate Temperature Service to 140° F (60° C)	*PV*	Performance varies with conditions. Consult Dudick for recommendations or testing
		4	Warm Temperature Service to 100° F (37° C)		

Example

Each grid block in the Guide shows all the information which is available on the product for the use shown. Thus, a block which shows I2, indicates that the product is capable of providing immersion service up to 160° F. Similarly, a block which shows F1 indicates the material will tolerate temperatures to the maximum capability shown in the Temperature Limits char (page 12), but that it is designed for exposure only to fumes.

Note: Temperature Limits chart is on page 12.

Dudick

Key

- Material will withstand constant flow or immersion service
- Material is suitable for intermittent or Spillage service
- Material will tolerate fumes only

	Light Duty Linings/Coatings						Toppings		Heavy Duty Linings			
	Protecto-Coat						Protecto-Crete		Protecto-Flake			
	300	600	700	800	900	1000	300	800	600	700	800	900
Acetaldehyde	NR	PV	PV	PV	F4	NR	S4	NR	NR	NR	NR	NR
Acetic Acid (0-10%)	F4	I4	I4	I4	I4	S1	S1	S1	I3	I3	I3	I3
Acetic Acid (10-50%)	NR	S1	F3	S1	S1	F1	S4	S3	I4	F3	I4	I4
Acetic Acid (50-100%)	NR	S3	PV	S3	S3	NR	NR	S3	PV	PV	PV	S4
Acetic Anhydride	NR	S4	S4	S4	S4	PV	S4	S4	S4	S4	S4	S4
Acetone	NR	NR	NR	F4	NR	NR	S4	S4	NR	NR	NR	NR
Acetyl Chloride	F4	PV	PV	PV	PV	PV	S4	S4	PV	PV	PV	PV
Acrylic Acid	F4	PV	PV	PV	PV	PV	NR	S4	I4	I4	I4	I4
Acrylonitrile	NR	NR	NR	NR	NR	PV	NR	NR	NR	NR	NR	PV
Adipic Acid	I4	I4	I4	I4	I4	PV	S4	S4	I4	I4	I4	I4
Alcohol (Ethyl)	S4	I4	I4	I4	I4	I4	S1	S1	I1	I1	I1	I1
Alcohol (Methyl)	NR	PV	PV	PV	F4	S4	S4	S1	I4	I4	I4	I4
Allyl Chloride	NR	NR	NR	NR	NR	PV	NR	S1	PV	NR	PV	S4
Alum	I4	I4	I4	I4	I4	I1	S1	S1	I3	I3	I3	I2
Aluminum Bromide	F4	I4	I4	I4	I4	F1	S4	S1	I1	I1	I1	I1
Aluminum Chloride	I4	I4	I4	I4	I4	I1	S3	S1	I1	I1	I1	I1
Aluminum Fluoride*	S4	S1	S1	S1	S1	NR	S1	S1	I4	I4	I4	I4
Aluminum Hydroxide	S4	F4	NR	F4	S4	S4	S1	S1	I4	NR	I3	I3
Aluminum Sulfate	S4	I4	I4	I4	I4	I1	S1	S4	I3	I3	I3	I2
Ammonia (Dry)	S4	F1	NR	F1	F1	F1	S1	S1	I3	NR	I3	I3
Ammonium Chloride	S4	I4	I4	I4	I4	I1	S1	S1	I1	I1	I1	I1
Ammonium Fluoride*	S4	I4	I4	I4	I4	NR	S1	S2	I3	I3	I3	I3
Ammonium Hydroxide	I4	F4	NR	F4	S4	I1	S1	S1	I2	NR	I2	I2
Ammonium Nitrate	I4	I4	I4	I4	I4	I1	S1	S1	I1	I1	I1	I1
Ammonium Persulfate	I4	I4	I4	I4	I4	I1	S1	S1	I1	I1	I1	I1
Ammonium Sulfate	I4	I4	I4	I4	I4	I1	S1	S1	I1	I1	I1	I1
Ammonium Sulfide	I4	I4	I4	I4	I4	I1	S1	S1	I1	I1	I1	I1
Ammonium Sulfite	I4	I4	I4	I4	I4	F1	S1	S1	I1	I1	I1	I1
Amyl Acetate	NR	S4	NR	S4	S4	NR	NR	NR	PV	NR	F4	F4
Amyl Alcohol	F4	S1	S3	S1	S1	NR	S3	S3	I4	I4	I4	I4
Aniline	NR	S4	S4	S4	S4	NR	NR	NR	NR	I4	I4	I4
Aniline Hydrochloride	F4	S4	S4	S4	S4	F4	S3	S3	I4	I4	I4	I4
Antimony Chloride	S4	I4	I4	I4	I4	I1	S1	S1	I1	I1	I1	I1
Aqua Regia	NR	F4	F4	F4	F4	NR	NR	NR	NR	NR	NR	NR
Arsenic Acid	F4	I4	I4	I4	I4	S4	S1	S1	I3	I3	I3	PV
Barium Acetate	S4	S4	S4	S4	S4	F4	S4	S3	I4	I4	I4	I4
Barium Chloride	I4	I4	I4	I4	I4	I1	S1	S1	I1	I1	I1	I1
Barium Hydroxide	I4	S3	NR	S3	S2	I1	S1	S4	I4*	NR	I4*	I3*
Barium Sulfide	I4	I4	I4	I4	I4	I1	S1	S1	I1	I1	I1	I1
Benzaldehyde	PV	NR	NR	NR	NR	NR	PV	PV	PV	NR	NR	PV
Benzene	NR	PV	PV	PV	NR	NR	S4	S4	NR	NR	NR	S4
Benzene Sulfonic Acid	F4	I4	I4	I4	I4	F4	S4	S1	I1	I1	I1	I1
Benzene Sulfonic Chloride	F4	I4	I4	I4	I4	F4	S4	S1	I1	I1	I1	I1
Benzoic Acid	S4	I4	I4	I4	I4	F4	S1	S1	I1	I1	I1	I1
Benzoyl Chloride	NR	NR	PV	NR	PV	NR	NR	NR	NR	PV	NR	PV
Black Liquor	S4	S1	NR	S1	S1	I1	S1	S3	I1	NR	I1	I1
Bleach(5.5%)*	F4	PV	PV	PV	I1	F1	NR	S4	NR	NR	NR	I1
Boric Acid	I4	I4	I4	I4	I4	I1	S1	S1	I2	I2	I2	I2
Bromine, Wet Gas	NR	NR	NR	NR	NR	NR	NR	NR	F4	F4	F4	F4
Bromine Water (5%)	NR	S4	S4	S4	S4	S4	NR	S4	I4	I4	I4	I4
Butadiene	PV	PV	PV	PV	PV	NR	S4	S4	PV	PV	PV	PV
Butanol	NR	S4	S4	S4	S4	NR	S4	S1	I3	I3	I3	I3
Butyl Acetate	NR	NR	NR	NR	F4	NR	S4	NR	NR	NR	NR	PV
Butyl Carbitol	PV	PV	PV	PV	F4	PV	S4	PV	I4	I4	I4	I4
Butyl Cellosolve	NR	PV	NR	NR	S4	NR	NR	NR	NR	NR	NR	S4
Butyric Acid	NR	F4	F4	F4	F3	NR	NR	NR	I3	I3	I3	I3
Cadmium Plating (Cyanide)	S4	S1	NR	S1	S1	S1	S1	S3	I3	NR	I3	I3
Calcium Bisulfite	S4	I4	I4	I4	I3	F1	S3	S1	I1	I1	I1	I1

*May need synthetic fabric, carbon fillers or HP-201 topcoat. Consult a Dudick

1 Good to the maximum temperature of the product
2 High temperature service to 160°F (71°C)
3 Moderate Temperature Service to 140°F (60°C)
4 Warm Temperature Service to 100°F (37°C)

PV Performance varies with conditions. Consult Dudick for recommendations or testing
NR Not recommended
NI No information available

Linings/Toppings					Toppings/Linings						Tiled Vessel Linings				Grouts
Protecto-Glass 300	600	700	800	900	Protecto-Line 100	300	600	700	800	900	Protecto-Seal 300	600	700	800	Grouts 100
S4	NR	NR	NR	NR	S4	S4	S4	S4	S4	S4	NR	NR	NR	NR	S4
S4	I3	I4	I3	I3	S3	S3	I3	I4	I3	I3	S3	I3	I3	I3	S4
NR	I4	F3	I4	I4	S4	NR	I4	S1	I4	I4	S4	I4	F3	I4	NR
NR	PV	PV	PV	S4	NR	NR	S1	S1	PV	S4	NR	PV	PV	PV	NR
NR	S4	S4	S4	S4	S4	NR	S1	S3	S1	S1	NR	S4	S4	S4	NR
S4	NR	NR	NR	NR	S1	S4	S4	S4	S4	S4	S4	NR	NR	NR	S4
S4	NR	PV	PV	S4	S3	S4	S4	S4	S4	S4	S4	PV	PV	PV	NR
NR	I4	I4	I4	I4	PV	NR	I4	I4	I4	I4	NR	I4	I4	I4	NR
NR	NR	NR	NR	S4	NR	NR	NR	NR	NR	PV	NR	NR	NR	NR	S4
S4	I4	I4	I4	I4	I4	S4	I4	I4	I4	I4	S4	I4	I4	I4	NR
S1	I1	I1	I1	I1	I1	S1	I1	I1	I1	I1	S1	I1	I1	I1	S1
S4	I4	I4	I4	I4	I4	S4	I4	I4	I4	I4	S4	I4	I4	I4	S4
NR	PV	NR	F4	S4	NR	NR	S4	NR	PV	S4	NR	PV	NR	PV	NR
S1	I3	I3	I3	I1	I3	S1	I3	I3	I3	I2	S1	I3	I3	I3	S1
S4	I1	I1	I1	I1	S1	S4	I1	I1	I1	I1	S4	I1	I1	I1	S1
S1	I1	I1	I1	I1	I4	S1	I1	I1	I1	I1	S1	I1	I1	I1	S1
S1	I4	I4	I4	PV	I4	S1	I1	I1	I1	I1	S1	I4	I4	I4	S4
S4	I3	NR	I3	I2	I1	S1	I3	NR	I1	I1	S1	I4	NR	I3	S1
S1	I3	I3	I3	I1	I3	S1	I3	I3	I3	I2	S1	I3	I3	I3	S1
S1	I3	NR	I3	PV	I1	S1	I3	S4	I3	I3	S1	I3	NR	I3	F1
S1	I1	I1	I1	I1	I1	S1	I1	I1	I1	I1	S1	I1	I1	I1	S1
S1	I3	I3	I3	I3	I1	S1	I1	NR	I1	I1	S1	I3	I3	I3	S4
S1	I3	NR	I3	I3	I1	S1	I3	NR	I2	I2	S1	I2	NR	I2	S1
S1	I1	I1	I1	I1	I1	S1	I1	I1	I1	I1	S1	I1	I1	I1	S1
S1	I1	I1	I1	I1	I4	S1	I1	I1	I1	I1	S1	I1	I1	I1	S4
S1	I1	I1	I1	I1	I1	S1	I1	I1	I1	I1	S1	I1	I1	I1	S1
S1	I1	I1	I1	I1	I1	S1	I1	I1	I1	I1	S1	I1	I1	I1	S1
S1	I1	I1	I1	I1	I1	S1	I1	I1	I1	I1	S1	I1	I1	I1	S1
S4	S4	NR	S4	S4	S4	S4	PV	NR	S4	S4	S4	PV	NR	F4	S4
S3	I4	I4	I4	I4	S1	S3	I4	I4	I4	I4	S3	I4	I4	I4	S1
NR	NR	I4	I4	I4	NR	NR	NR	I4	I4	I4	NR	NR	I4	I4	NR
S3	I4	I4	I4	I4	I3	S3	I4	I4	I4	I4	S3	I4	I4	I4	S3
S1	I1	I1	I1	I1	I3	S1	I1	I1	I1	I1	S1	I1	I1	I1	S1
NR	NR	NR	NR	NR	NR	NR	NR	NR	NR	F4	NR	NR	NR	NR	NR
S1	I3	I3	I3	PV	PV	S1	I1	I1	I1	I1	S1	I3	I3	I3	S1
S4	I4	I4	I4	I3	S3	S4	I4	I4	I4	I4	S4	I4	I4	S4	S4
S1	I1	I1	I1	I1	I3	S1	I1	I1	I1	I1	S1	I1	I1	I1	S1
S1	I4	NR	I4	I4	I1	S1	I3	NR	I3	I3	S1	I4	NR	I4	S1
S1	I1	I1	I1	I1	I4	S1	I1	I1	I1	I1	S1	I1	I1	I1	S1
PV	PV	NR	NR	PV	PV	PV	PV	NR	NR	PV	PV	PV	NR	NR	PV
S4	I4	NR	I4	I4	I4	S4	S4	NR	S4	S4	S4	NR	NR	NR	S4
S4	I1	I1	I1	I1	S1	I4	I1	I1	I1	I1	S4	I1	I1	I1	S4
S4	I1	I1	I1	I1	NR	S4	I1	I1	I1	I1	S4	I1	I1	I1	S4
S1	I1	I1	I1	I1	I3	S1	I1	I1	I1	I1	S1	I1	I1	I1	S1
NR	NR	PV	NR	PV	I4	NR	NR	PV	NR	PV	NR	NR	PV	NR	PV
S1	I3	NR	I3	I3	I1	S1	I3	NR	I1	I1	S1	I1	NR	I1	S1
NR	NR	NR	I4	I1	NR	NR	NR	NR	NR	I1	NR	NR	NR	NR	NR
S1	I3	I3	I3	I3	I3	S1	I3	I3	I3	I3	S1	I2	I2	I2	S1
NR	NR	NR	NR	F4	NR	NR	F4	F4	F4	F4	NR	F4	F4	F4	NR
NR	I4	I4	I4	I4	NR	NR	I4	I4	I4	I4	NR	I4	I4	I4	NR
PV	PV	PV	PV	PV	PV	PV	PV	PV	PV	PV	PV	PV	PV	PV	S4
S4	I3	I3	I3	I3	I3	S4	I4	I3	I3	I3	S4	I3	I3	I3	S1
S4	NR	NR	NR	PV	I4	S4	NR	NR	NR	PV	S4	NR	NR	NR	S4
S4	I4	I4	I4	I4	I4	S4	I4	4	I4	S4	S4	I4	I4	I4	S4
NR	NR	NR	NR	S4	S4	NR	S4	S4	NR	S4	NR	NR	NR	NR	NR
NR	I3	I3	I3	I3	NR	NR	I4	I3	I3	I3	NR	I3	I3	I3	NR
S1	I3	NR	I3	I3	I1	S1	I3	NR	I3	I3	S1	I3	NR	I3	S2
[illegible]	I1	I1	I1	I1	I3	S4	I1	I1	I1	I1	S4	I1	I1	I1	S1

Dudick

Key

Material will withstand constant flow or immersion service
Material is suitable for intermittent or Spillage service
Material will tolerate fumes only

	Light Duty Linings/Coatings						Topings		Heavy Duty Linings			
	300	600	700	800	900	1000	300	800	600	700	800	900
Calcium Carbonate	I4	I4	I4	I4	I3	I1	S1	S4	I3	I3	I3	I3
Calcium Chloride	I4	I4	I4	I4	I4	I1	S1	S1	I1	I1	I1	I1
Calcium Hydroxide*	I4	I4	NR	I4	I3	I1	S1	S3	I3	NR	I3	I3
Calcium Hypochlorite (5%)*	F4	F4	F4	F4	S4	F4	S4	S3	NR	NR	NR	NR
Calcium Nitrate	I4	I4	I4	I4	I4	I1	S1	S1	I1	I1	I1	I1
Caprylic Acid	NR	I4	I4	I4	I4	NR	NR	NR	I4	I4	I4	I4
Carbon Disulfide	NR	S4	S4	S4	S4	NR	S4	NR	F4	F4	F4	F4
Carbon Tetrachloride	F4	S4	S4	S4	S3	NR	S3	S3	I4	I4	I4	I4
Castor Oil	I4	I4	I4	I4	I4	I1	S1	S1	I1	I1	I1	I1
Chloracetic Acid	NR	F4	F4	F4	F4	F1	NR	S4	F3	F3	F3	F3
Chloral	NR	NR	S4	NR	NR	NR	S4	NR	NR	S4	NR	NR
Chlorine Dioxide	NR	S4	S4	S4	S3	NR	NR	S3	I4	I3	I4	I3
Chlorine Gas (Dry)	NR	F4	F3	F4	F3	NR	NR	S4	I4	I1	I4	I3
Chlorine Gas (Wet)	NR	NR	F4	NR	F4	NR	NR	S2	F4	F1	F4	F4
Chlorine Water (Saturated)	NR	S4	S3	S4	S3	S4	S4	S2	I4	I1	I4	I4
Chlorobenzene	NR	NR	NR	NR	S4	NR	S4	NR	NR	NR	NR	S4
Chloroform	NR	NR	NR	NR	NR	NR	S4	NR	NR	NR	NR	NR
Chlorophenol	NR	NR	NR	NR	NR	NR	NR	NR	NR	NR	NR	NR
Chlorosulfonic Acid	NR	NR	NR	NR	NR	NR	NR	NR	NR	NR	NR	NR
Chlorotoluene	NR	S4	NR	S4	S4	NR	NR	S4	I4	NR	NR	PV
Chromic Acid (10%)	F4	S4	S3	S4	S4	S4	S4	S4	I4	I3	I4	I4
Chromic Acid (40%)	NR	S4	S3	S4	S4	S4	S4	S4	I4	I3	I4	PV
Chromic Chloride	S4	I4	I4	I4	I4	S1	S1	S1	I1	I1	I1	I1
Citric Acid	F4	I4	I4	I4	I4	S1	S4	S1	I1	I1	I1	I1
Copper Plating (Cyanide)	S3	S4	NR	S4	S3	S1	S2	S4	I4	NR	I4	I3
Copper Plating (Acid)	S4	S3	S3	S3	S3	S1	S2	S1	I1	I1	I1	I1
Copper Salts	S3	I4	I4	I4	I4	S1	S1	S1	I1	I1	I1	I1
Corn Oil	S3	I4	I4	I4	I4	I1	S3	S1	I1	I1	I1	I1
Corn Starch	S1	I4	NR	I4	I4	I4	S1	S1	I1	NR	I1	I1
Corn Sugar	S1	I4	NR	I4	I4	I4	S1	S1	I1	NR	I1	I1
Cottonseed Oil	S3	I4	I4	I4	I4	I1	S3	S1	I1	I4	I1	I1
Cresol	NR	NR	NR	NR	PV	NR	NR	NR	NR	NR	NR	PV
Cresylic Acid	NR	NR	NR	NR	NR	NR	NR	NR	NR	NR	NR	NR
Crude Oil	PV	I4	I4	I4	I4	PV	PV	S1	I1	I1	I1	I1
Detergent Sulfonated	PV	I4	PV	I4	I4	PV	PV	PV	I1	PV	I1	I1
Dextrose	S3	I4	I4	I4	I4	I1	S1	S1	I1	I1	I1	I1
Dibutyl Phthalate	I4	I4	I4	I4	I4	I1	S1	S1	I3	I3	I3	I3
Dichloro Acetic Acid (20%)	NR	I4	I4	I4	I4	F1	NR	S3	I4	I4	I4	I4
Diesel Fuel	S4	I4	I4	I4	I4	S3	S1	S1	I1	I1	I1	I1
Diethylamine (100%)	NR	NR	NR	NR	PV	NR	NR	NR	NR	NR	NR	PV
Dimethyl Formamide	NR	NR	NR	NR	PV	NR	NR	NR	I4	NR	NR	PV
Esters, Fatty Acids	PV	I4	S4	I4	I4	PV	PV	PV	I3	I4	I3	I3
Ethyl Acetate	NR	NR	NR	NR	NR	F1	S4	S4	NR	NR	NR	NR
Ethyl Alcohol	S4	I4	I4	I4	I4	I4	S1	S1	I1	I1	I1	I1
Ethylamine	NR	NR	NR	NR	PV	NR	PV	PV	NR	NR	NR	PV
Ethylchloroformate	NR	NR	NR	NR	PV	NR	NR	NR	PV	PV	NR	PV
Ethyl Ether	NR	NR	NR	NR	PV	NR	S4	S4	PV	NR	PV	PV
Ethylene Dichloride	NR	NR	NR	NR	NR	NR	NR	NR	PV	NR	NR	NR
Ethylene Glycol	I4	I4	I4	I4	I4	I4	S1	S1	I1	I1	I1	I1
Ethylene Oxide	NR	PV	PV	PV	PV	PV	PV	S1	PV	PV	PV	PV
Ethyl Sulfate	PV	PV	PV	PV	PV	PV	S4	NR	I4	F4	I4	I4
Ferric Chloride	S4	I4	I4	I4	I4	I1	S1	NR	I1	I1	I1	I1
Ferric Sulfate	S4	I4	I4	I4	I4	I1	S1	S1	I1	I1	I1	I1
Ferrous Chloride	S4	I4	I4	I4	I4	I1	S1	S1	I1	I1	I1	I1
Ferrous Sulfate	S4	I4	I4	I4	I4	I1	S1	S1	I1	I1	I1	I1
Fluoboric Acid*	PV	S4	S4	S4	S4	PV	S4	S4	I2	I2	PV	I2
Fluorine Gas*	NR	NR	NR	NR	NR	NR	PV	PV	NR	NR	PV	PV
Fluosilicic Acid*	PV	S4	S4	S4	S4	PV	S4	S4	2	I2	PV	I2

*May need synthetic fabric, carbon fillers or HP-201 topcoat. Consult a Dudick Corrosion-Proof, Inc. technical representative for more complete information on these products.

1 Good to the maximum temperature of the product
2 High temperature service to 160°F (71°C)
3 Moderate Temperature Service to 140°F (60°C)
4 Warm Temperature Service to 100°F (37°C)

PV Performance varies with conditions. Consult Dudick for recommendations or testing
NR Not recommended
NI No information available

Linings/Toppings					Toppings/Linings						Tiled Vessel Linings				Grouts
Protecto-Glass	300	600	700	800	900	Protecto-Glass	100	300	600	700	800	900	Protecto-Seal	300	600	700	800	Protecto-Grout	100
S1	I3	I3	I3	I2		I1	S1	I3	I3	I3	I2		S1	I3	I3	I3		S1
S1	I1	I1	I1	I1		I1	S1	I1	I1	I1	I1		S1	I1	I1	I1		S1
S1	I3	NR	I3	I2		I1	S1	I3	NR	I3	I2		S1	I3	NR	I3		S1
S4	NR	NR	I4	I4		NR	S4	NR	NR	I4	I4		S4	NR	NR	NR		S4
S1	I1	I1	I1	I1		I1	S1	I1	I1	I1	I1		S1	I1	I1	I1		S1
NR	I4	I4	I4	I4		NR	NR	I4	I4	I4	I4		NR	I4	I4	I4		NR
S4	F4	F4	F4	F4		F4	S4	F4	F4	F4	F4		S4	F4	F4	F4		NR
S3	I4	I4	I4	I4		I4	S3	I4	I4	I4	I4		S3	I4	I4	I4		S1
S1	I1	I1	I1	I1		I3	S1	I1	I1	I1	I1		S1	I1	I1	I1		S3
NR	S4	S4	S4	S4		NR	NR	F3	F3	F3	F3		NR	F3	F3	F3		S4
S4	NR	NR	NR	NR		I4	S4	NR	S4	NR	NR		S4	NR	S4	NR		S4
NR	I4	I3	I4	I4		NR	NR	I4	I3	I4	I4		NR	I4	I3	I4		NR
NR	I4	I1	I4	I4		NR	NR	I4	I1	I4	I4		NR	I4	I1	I4		NR
NR	F4	F1	F4	F4		NR	NR	F4	F4	F4	F4		NR	F4	F1	F4		NR
S4	I4	I3	I4	I4		NR	S4	I4	I1	I4	I4		S4	I4	I1	I4		NR
S4	NR	NR	I4	S4		I4	S4	NR	NR	NR	S4		S4	NR	NR	NR		NR
S4	NR	NR	NR	NR		NR	S4	NR	NR	NR	NR		S4	NR	NR	NR		S4
NR	NR	NR	NR	NR		NR	NR	NR	NR	NR	NR		NR	NR	NR	NR		NR
NR	NR	NR	NR	NR		NR	NR	NR	NR	NR	NR		NR	NR	NR	NR		NR
S4	I4	NR	I4	PV		I4	S4	I4	NR	NR	PV		S4	I4	NR	NR		S4
S4	I4	I3	I4	I4		NR	S4	I4	I3	I4	I3		S4	I4	I3	I4		S4
S4	I4	I3	I4	PV		NR	S4	I4	I3	I4	PV		S4	I4	I3	I4		NR
S1	I1	I1	I1	I1		I1	S1	I1	I1	I1	I1		S1	I1	I1	I1		S1
S1	I1	I1	I1	I1		I2	S1	I1	I1	I1	I1		S1	I1	I1	I1		S2
S4	I4	NR	I4	I3		I2	S4	I4	NR	I4	I3		S4	I4	NR	I4		S1
S2	I1	I1	I1	I1		I3	S2	I1	I1	I1	I1		S2	I1	I1	I1		S3
S1	I1	I1	I1	I1		I1	S1	I1	I1	I1	I1		S1	I1	I1	I1		S1
S3	I1	I1	I1	I1		I4	S3	I1	I1	I1	I1		S3	I1	I1	I1		S4
S1	I1	NR	I1	I1		I1	S1	I1	NR	I1	I1		S1	I1	NR	I1		S1
S1	I1	NR	I1	I1		I1	S1	I1	NR	I1	I1		S1	I1	NR	I1		S1
S3	I1	I4	I1	I1		I4	S3	I1	I4	I1	I1		S3	I1	I4	I1		S4
NR	NR	NR	NR	PV		NR	NR	NR	NR	NR	PV		NR	NR	NR	NR		NR
NR	NR	NR	NR	NR		NR	NR	NR	NR	NR	NR		NR	NR	NR	NR		NR
PV	I1	I1	I1	I1		PV	PV	I1	I1	I1	I1		PV	I1	I1	I1		PV
PV	I1	PV	I1	I1		PV	PV	I1	PV	I1	I1		PV	I1	PV	I1		PV
S1	I1	I1	I1	I1		I1	S1	I1	I1	I1	I1		S1	I1	I1	I1		S1
S1	I3	I3	I3	I3		I2	S1	I3	I3	I3	I3		S1	I3	I3	I3		S1
NR	I4	I4	I4	I4		NR	NR	I4	I4	I4	I4		NR	I4	I4	I4		S4
S1	I1	I1	I1	I1		I2	S1	I1	I1	I1	I1		S1	I1	I1	I1		S1
NR	NR	NR	NR	PV		NR	NR	NR	NR	NR	PV		NR	NR	NR	NR		NR
NR	I4	NR	I4	PV		NR	NR	I4	NR	NR	PV		NR	I4	NR	NR		NR
PV	I4	I4	I4	I3		PV	PV	I3	I4	I3	I3		PV	I3	I4	I3		PV
S4	PV	NR	NR	NR		S4	S4	PV	NR	NR	S4		S4	NR	NR	NR		S4
S1	I1	I1	I1	I1		I1	S1	I1	I1	I1	I1		S1	I1	I1	I1		S1
PV	NR	NR	NR	PV		NR	PV	NR	NR	NR	PV		PV	NR	NR	NR		NR
S4	PV	PV	PV	PV		NR	S4	PV	PV	PV	PV		S4	PV	PV	NR		NR
S4	PV	NR	PV	PV		PV	S4	PV	NR	PV	PV		S4	PV	NR	PV		S4
PV	PV	NR	PV	S4		PV	PV	PV	NR	NR	S4		PV	PV	NR	NR		NR
S1	I1	I1	I1	I1		I1	S1	I1	I1	I1	I1		S1	I1	I1	I1		S1
S4	PV	PV	PV	PV		PV	S4	PV	PV	PV	PV		S4	PV	PV	PV		PV
S4	I4	F4	I4	I4		I4	S4	I4	F4	I4	I4		S4	I4	F4	I4		PV
S1	I1	I1	I1	I1		I1	S1	I1	I1	I1	I1		S1	I1	I1	I1		S1
S1	I1	I1	I1	I1		I1	S1	I1	I1	I1	I1		S1	I1	I1	I1		S1
S1	I1	I1	I1	I1		I1	S1	I1	I1	I1	I1		S1	I1	I1	I1		S1
S1	I1	I1	I1	I1		I1	S1	I1	I1	I1	I1		S1	I1	I1	I1		S1
S4	I1	I1	PV	I1		NR	S4	I1	I1	I1	I1		S4	I2	I2	PV		S4
PV	NR	NR	PV	PV		NR	PV	NR	NR	PV	PV		PV	NR	NR	PV		NR
S4	I4	I4	PV	I4		PV	S4	I2	I2	I2	I2		S4	I2	I2	PV		S4

Dudick

Key

Material will withstand constant flow or immersion service
Material is suitable for intermittent or Spillage service
Material will tolerate fumes only

Chemical	Light Duty Linings/Coatings 300	600	700	800	900	1000	Topcoats 300	800	Heavy Duty Linings 600	700	800	900
Formaldehyde	F4	I4	I4	I4	I4	F4	S1	S1	I1	I1	I1	I1
Formic Acid	NR	S4	S4	S4	S4	PV	NR	S4	I4	I4	I4	I4
Fuel Oil 1 & 2	S4	I4	I4	I4	I4	NR	S1	S1	I1	I3	I1	I1
Furfural	NR	S4	S4	S4	S4	PV	PV	PV	NR	PV	PV	PV
Furfuryl Alcohol	PV	S4	S4	S4	S4	S4	S1	S1	I4	I4	I4	I4
Gasoline	I4	I4	I4	I4	I4	I4	S1	S1	I1	I1	I1	I1
Glucose	I4	I4	I4	I4	I4	I1	S1	S1	I1	I1	I1	I1
Gluconic Acid (50%)	PV	F4	S4	F4	S4	PV	PV	S4	S4	I4	S4	I4
Glycol	I4	I4	I4	I4	I4	I4	S1	S1	I1	I1	I1	I1
Glycolic Acid	NR	S4	S4	S4	S4	F1	S4	S4	I3	I3	I3	I3
Gold Plating (Cyanide)	S4	S1	NR	S1	S1	S1	S1	S4	I4	NR	I4	I3
Grape Juice	I3	I3	I3	I3	I3	I1	S1	S1	I1	I1	I1	I1
Green Liquor	S4	I4	NR	I4	I3	I1	S1	S3	I1	NR	I1	I1
Heptane	S4	S1	S1	S1	S1	I4	S1	S1	I2	I2	I2	I2
Heptanoic Acid	PV	S4	S4	S4	S4	F1	PV	I3	I3	I3	I3	I3
Hexane	F4	S1	S1	S1	S1	I4	S1	S1	I2	I2	I2	I2
Hydrazine (35%)	PV	NR	NR	NR	NR	NR	S4	S4	NR	NR	NR	NR
Hydraulic Fluid	PV	PV	PV	PV	I3	PV	S1	S1	PV	PV	PV	I1
Hydrindic Acid (20%)	F4	S4	S4	S4	S4	S1	PV	S4	I4	I4	I4	I4
Hydrobromic Acid (20%)	F4	S4	S4	S4	S4	S1	PV	S4	I4	I3	I4	I4
Hydrocarbons (Aliphatic)	PV	I4	I4	I4	I4	I1	S1	S4	I1	I1	I1	I1
Hydrocarbons (Aromatic)	PV	PV	PV	PV	F4	NR	S4	S4	PV	PV	PV	I1
Hydrochloric Acid (1-25%)	F4	S3	S3	S3	S3	F1	S4	S4	I1	I3	I1	I1
Hydrochloric Acid (25-37%)	NR	F3	F3	F3	F3	F1	S4	S4	PV	PV	PV	I2
Hydrofluoric Acid (1-10%)*	NR	F3	NR	NR	F3	NR	NR	NR	NR	NR	NR	NR
Hydrofluoric Acid (10-53%)*	NR	F4	NR	NR	F4	NR	NR	NR	NR	NR	NR	NR
Hydrofluosilicic Acid*	F4	F3	NR	NR	F3	PV	NR	NR	I2	I2	PV	NR
Hydrogen Bromide	PV	PV	PV	PV	F1	PV	PV	S4	PV	PV	PV	I4
Hydrogen Peroxide (30%)	NR	PV	PV	PV	F4	PV	NR	S4	PV	PV	PV	I4
Hydrogen Sulfide	S4	I4	I4	I4	I3	I1	S1	S1	I1	I1	I1	I1
Hypochlorous Acid	NR	NR	NR	NR	F3	NR	NR	NR	NR	NR	NR	NR
Iodine	NR	F4	F4	F4	F3	F1	PV	S4	I4	I4	I4	I3
Insecticides	PV	PV	PV	PV	F4	PV	PV	S3	PV	PV	PV	I3
Isophorone	PV	PV	PV	PV	PV	PV	S4	PV	I4	I4	I4	I4
Isopropyl Acetate	NR	NR	NR	NR	NR	PV	S4	NR	PV	NR	PV	S4
Isopropyl Alcohol	S4	PV	PV	PV	S4	PV	S1	S1	I1	I1	I1	I1
Isopropyl Amine	PV	PV	PV	PV	F4	NR	PV	NR	PV	I4	PV	S4
Isopropyl Ether	S4	PV	PV	PV	F4	NR	S4	S4	I4	I4	I4	I4
Jet Fuel	I4	I4	I4	I4	I4	F1	S1	S1	I1	I1	I1	I1
Kaolin	I1	PV	NR	PV	I1	I1	I1	I1	PV	NR	PV	I1
Kerosene	I4	I4	I4	I4	I4	I1	S1	S1	I1	I1	I1	I1
Lasso Herbicide (10%)	PV	S4	S4	S4	S4	F4	PV	S4	I4	I4	I4	I4
Lactic Acid (1-20%)	F4	I4	I4	I4	I4	S1	S4	S1	I1	I1	I1	I1
Lactic Acid (20%-Con)	NR	S4	S4	S4	I4	S1	NR	S4	I4	I3	I3	I3
Lauric Acid	PV	I4	I4	I4	I3	S1	NR	S1	I1	I1	I1	I1
Lead Acetate	I4	I4	I4	I4	I3	F1	S1	S1	I1	I1	I1	I1
Linseed Oil	S3	I1	I1	I1	I1	I1	S4	S1	I1	I1	I1	I1
Magnesium Sulfate	I1	I1	I1	I1	I1	I1	S1	S1	I1	I1	I1	I1
Maleic Acid	S3	S3	S3	S3	S1	S1	S1	S4	I3	I3	I3	I1
Manganese Salts	I4	I4	I4	I4	I4	I1	S1	S1	I1	I1	I1	I1
Mercury Salts	I4	I4	S4	I4	I4	I1	S1	S1	I1	S1	I1	I1
Methyl Alcohol	NR	PV	PV	PV	F4	S4	S4	S1	I4	I4	I4	I4
Methyl Acetate	NR	NR	NR	NR	F4	PV	S3	S4	PV	NR	PV	PV
Methylene Chloride	NR	NR	NR	NR	NR	NR	NR	NR	NR	NR	NR	NR
Methyl Chloride	NR	NR	NR	NR	NR	NR	NR	NR	NR	NR	NR	NR
Methyl Ethyl Ketone	NR	NR	NR	NR	NR	NR	PV	NR	PV	NR	PV	NR
Methyl Isobutyl Ketone	NR	NR	NR	NR	NR	NR	S4	S4	PV	NR	PV	NR
Milk Products	I1	I1	I1	I1	I1	I1	S1	S1	I1	I1	I1	I1

*May need synthetic fabric, carbon fillers or HP 201 topcoat. Consult a Dudick Corrosion Proof, Inc. technical representative for more complete information on

1 Good to the maximum temperature of the product
2 High temperature service to 160°F (71°C)
3 Moderate Temperature Service to 140°F (60°C)
4 Warm Temperature Service to 100°F (37°C)

PV Performance varies with conditions. Consult Dudick for recommendations or testing
NR Not recommended
NI No information available

Linings/Toppings					Toppings/Linings						Tiled Vessel Linings				Grouts
Protecto-Glass 300	600	700	800	900	Protecto-Line 100	300	600	700	800	900	Protecto-Seal 300	600	700	800	Grouts 100
S1	I1	1	I1	I1	I1	S1	I1	I1	I1	I1	S1	1	I1	I1	S1
NR	I4	I4	I4	I4	NR	NR	I4	I4	I4	I4	NR	I4	I4	I4	NR
S1	I4	I4	I4	I3	I1	S1	I1	I3	I1	I1	S1	I1	I3	I1	S1
PV	PV	PV	PV	PV	PV	PV	NR	PV	PV	PV	PV	NR	PV	PV	PV
S1	I4	I4	I4	I4	I4	S1	I4	I4	I4	I4	S1	4	I4	I4	S4
S1	I1	I1	I1	I1	I1	S1	I1	I1	I1	I1	S1	I1	I1	I1	I1
S1	I1	I1	I1	I1	I1	S1	I1	I1	I1	I1	S1	I1	I1	I1	I1
PV	S4	S4	S4	S4	PV	PV	S4	I4	I4	I4	PV	S4	I4	S4	
S1	I1	I1	I1	I1	I1	S1	I1	I1	I1	I1	S1	I1	I1	I1	S1
S4	I3	I3	I3	I3	NR	S4	I3	I3	I3	I3	S4	I3	I3	I3	NR
S1	I4	NR	I4	I3	I1	S1	I4	NR	I4	I3	S1	I4	NR	I4	S1
S1	I1	I1	I1	I1	I1	S1	I1	I1	I1	I1	S1	I1	I1	I1	S1
S1	I1	NR	I1	I1	I1	S1	I1	NR	I1	I1	S1	I1	NR	I1	S1
S1	3	3	I3	I3	I1	S1	I3	I3	I3	I3	S1	I2	I2	I2	S1
PV	I3	I3	I3	I3	PV	PV	I3	I3	I3	I3	PV	I3	I3	I3	PV
S1	I3	I3	I3	I3	I1	S1	I2	I2	I2	I2	S1	I2	I2	I2	S1
S4	NR	NR	NR	NR	I4	S4	NR	NR	NR	NR	S4	NR	NR	NR	S4
PV	PV	PV	PV	I1	I1	PV	PV	PV	PV	I1	PV	PV	PV	PV	
PV	I4	I4	I4	I4	NR	PV	I4	I4	I4	I4	PV	I4	I4	I4	NR
PV	I4	I3	I4		NR	PV	I4	I3	I4	I4	PV	I4	I3	I4	NR
S1	I1	I1	I1	I1	I1	S1	I1	I1	I1	I1	S1	I1	I1	I1	S1
S4	PV	PV	I4	I1	I4	S4	PV	PV	I4	I1	S4	PV	PV	PV	F4
S4	I3	I3	I3	I3	I4	S4	I3	I3	I3	I3	S4	I3	I3	I3	S4
S4	PV	PV	PV	I4	S4	S4	PV	PV	S3	S3	S4	PV	PV	PV	S4
S4	NR	NR	NR	NR	PV	S4	I4	I4	I2	I2	S4	NR	NR	NR	NR
NR	NR	NR	NR	NR	PV	NR	I4	I4	S4	S4	NR	NR	NR	NR	NR
S4	I2	I2	PV	I2	PV	S4	I2	I2	I2	I2	S4	I2	I2	PV	S4
S4	PV	PV	PV	S4	PV	PV	PV	PV	S4	S4	PV	PV	PV	PV	S4
PV	PV	PV	PV	I4	PV	PV	PV	PV	S1	S1	PV	PV	PV	PV	S4
S1	I1	I1	I1	I1	I2	S1	I1	I1	I1	I1	S1	I1	I1	I1	S3
NR	NR	NR	NR	S3	NR	NR	PV	I4	I4	I3	NR	NR	NR	NR	NR
PV	4	I4	I4	I3	PV	PV	I4	I4	4	I3	PV	I4	I4	I4	S4
S4	PV	PV	PV	I3	S1	S4	PV	PV	S1	S1	PV	PV	PV	PV	S4
S4	I4	I4	I4	I4	I4	S4	I4	I4	I4	I4	S4	I4	I4	I4	S4
S4	PV	NR	PV	I4	PV	S4	PV	NR	S4	I4	S4	PV	NR	PV	NR
S1	I1	I1	I1	I1	I1	S1	I1	I1	I1	I1	S1	I1	I1	I1	S3
S4	PV	I4	PV	I4	S3	S4	PV	I4	I4	I4	PV	PV	I4	PV	S4
S4	I4	I4	I4	I4	I4	S4	I4	I4	I4	I4	S4	I4	I4	I4	S4
S1	I1	I1	I1	I1	I1	S1	I1	I1	I1	I1	S1	I1	I1	I1	S2
S1	PV	NR	PV	I1	I1	I1	PV	NR	I1	I1	I1	PV	NR	PV	I1
S1	I1	I1	I1	I1	I1	S1	I1	I1	I1	I1	S1	I1	I1	I1	S2
S4	I4	I4	I4	I4	I4	S4	I4	I4	I3	I3	PV	I4	I4	I4	S4
S4	I1	I1	I1	I1	S4	S4	I1	I1	I1	I1	S4	I1	I1	I1	NR
NR	I4	I3	I3	I3	NR	NR	I4	I3	I3	I3	NR	I4	I3	I3	NR
PV	I1	I1	I1	I1	S4	PV	I1	I1	I1	I1	PV	I1	I1	I1	S3
S1	I1	I1	I1	I1	I1	S1	I1	I1	I1	I1	S1	I1	I1	I1	S1
S4	I1	I1	I1	I1	PV	S4	I1	I1	I1	I1	S4	I1	I1	I1	S4
S1	I1	I1	I1	I1	I1	S1	I1	I1	I1	I1	S1	I1	I1	I1	S
S3	I3	I3	I3	I1	I2	S3	I3	I3	I3	I1	S3	I3	I3	I3	S3
S1	I1	I1	I1	I1	I1	I1	I1	I1	I1	I1	S1	I1	I1	I1	S1
S1	I1	S1	I1	I1	I1	S1	I1	S1	I1	I1	S1	I1	S1	I1	S1
S4	I4	I4	I4	I4	I4	S4	I4	I4	I4	I4	S4	I4	I4	I4	S4
S4	PV	NR	PV	PV	PV	S4	PV	NR	S3	S3	S4	PV	NR	PV	PV
NR	NR	NR	NR	NR	NR	NR	NR	NR	NR	NR	NR	NR	NR	NR	NR
NR	NR	NR	NR	NR	NR	NR	NR	NR	NR	NR	NR	NR	NR	NR	NR
S4	PV	NR	PV	NR	I4	S4	PV	NR	S4	S4	S4	PV	NR	PV	NR
S4	PV	NR	I4	NR	I4	S4	PV	NR	S4	S4	S4	PV	NR	PV	NR
S1	I1	1	I1	I1	I1	I1	I1	I1	I1	I1	S1	1	I1	I1	S1

Dudick

Key

Material will withstand constant flow or immersion service
Material is suitable for intermittent or Spillage service
Material will tolerate fumes only

	Light Duty Linings/Coatings						Toppings		Heavy Duty Linings			
	300	600	700	800	900	1000	300	800	600	700	800	900
Mineral Oil	I4	I4	S4	I4	I4	S4	S1	S1	I1	I1	I1	I1
Molasses	I1	I1	I1	I1	I1	I1	S1	S1	I1	I1	I1	I1
Naphalene	S4	S4	S4	S4	S3	S4	S4	S4	I4	I4	I4	I3
Naphtha	S4	I4	I4	I4	I3	I4	S1	S1	I3	I1	I1	I1
Naphthenic Acid	PV	I4	I4	I4	PV	PV	S4	PV	I4	I4	I4	PV
Nickel Chloride	S4	S4	S4	S4	S4	S4	S1	S1	I1	I3	I1	I1
Nickel Plating (Bright)	S4	S4	S4	S4	S4	I4	S1	S1	I1	I1	I1	I1
Nickel Salts	S4	I4	I4	I4	I3	I4	S1	S1	I1	I1	I1	I1
Nitric Acid (5%)	S4	S3	S3	S3	S3	S4	S4	S1	I3	I1	I3	I2
Nitric Acid (10%)	S4	S3	S3	S3	S3	S4	S4	S1	I3	I2	I3	I2
Nitric Acid (20%)	NR	F4	F4	F4	F4	NR	NR	S2	I4	I3	I4	I4
Nitric Acid (40%)	NR	F4	F4	F4	F4	NR	NR	S4	I4	I4	I4	I4
Nitric Acid (60%)	NR	NR	NR	NR	F4	NR	NR	S4	S4	S4	S4	S4
Nitric Acid (Conc.)*	NR	NR	NR	NR	F4	NR	NR	NR	NR	F4	NR	F4
Nitrobenzene	NR	NR	NR	NR	NR	NR	PV	NR	PV	PV	PV	PV
Nitrous Acid	NR	PV	PV	PV	PV	PV	PV	S3	I3	I1	I3	I2
Octanoic	F4	S4	NR	S4	S3	PV	PV	S3	I4	NR	I4	I4
Oils (Animal)	I1	I1	I1	I1	I1	I1	S1	S1	I1	I1	I1	I1
Oils (Mineral)	I1	I1	I1	I1	I1	I1	S1	S1	I1	I1	I1	I1
Oils (Vegetable)	I1	I1	I1	I1	I1	I1	S1	S1	I1	I1	I1	I1
Oleic Acid	NR	I4	I4	I4	I3	NR	S4	S1	I1	I1	I2	I1
Oxalic Acid (Sat'd)	S4	I4	I4	I4	I3	S1	S1	S1	I3	I1	I1	I1
Ozone	PV	PV	PV	PV	I2	S3	S1	S1	PV	S4	PV	S4
Palmitic Acid	PV	S4	PV	S4	S3	PV	PV	S4	I1	PV	I1	I1
Pentachlorethane	PV	PV	PV	PV	S1	PV	S1	S4	PV	PV	PV	S1
Perchloric Acid	NR	PV	PV	PV	F4	PV	S1	S1	PV	PV	PV	PV
Perchlorethylene	NR	NR	NR	NR	F4	NR	S4	S4	I4	I4	PV	S4
Phenol (0%-10%)	NR	PV	PV	PV	F4	NR	S4	S2	PV	NR	PV	PV
Phenol (85%)	NR	NR	NR	NR	F4	NR	PV	PV	NR	NR	NR	PV
Phosphoric Acid (Conc.)	NR	S3	S3	S3	S1	NR	NR	S1	I1	I1	I1	I1
Phosphorous Oxychloride	NR	PV	PV	PV	F4	PV	S4	S4	PV	F4	PV	PV
Phosphorous Trichloride	NR	PV	PV	PV	F4	PV	S4	PV	PV	F4	PV	PV
Phthalic Acid	PV	S1	PV	S1	S1	PV	PV	S1	I1	PV	I1	I1
Potassium Bichromate	S4	I4	I4	I4	I4	S4	S4	S1	I4	I1	I4	I1
Potassium Bromate	S4	I4	I4	I4	I4	I4	S4	S1	I4	I4	I4	I4
Potassium Bromide	S4	I4	I4	I4	I4	I4	PV	S1	I1	I1	I1	I1
Potassium Carbonate	I4	PV	PV	PV	I4	I4	S1	S1	I4	NR	I4	I4
Potassium Chlorate	S4	I4	I4	I4	I4	I4	S1	S1	I1	I1	I1	I1
Potassium Chloride	I4	I4	I4	I4	I3	I4	S1	S1	I1	I1	I1	I1
Potassium Cyanide	S4	I4	I4	I4	PV	I4	S1	S1	I1	I1	I1	I1
Potassium Hydroxide (10%)*	I4	S1	NR	S1	I4	I4	S1	S1	I4	NR	I4	I4
Potassium Hydroxide (Conc.)*	S4	NR	NR	NR	S4	S1	S1	S1	NR	NR	NR	NR
Potassium Nitrate	I4	I4	I4	I4	I3	I1	S1	S1	I1	I1	I1	I1
Potassium Permanganate	I4	I4	I4	I4	I3	S1	S1	S1	PV	I1	I1	I1
Potassium Peroxide	S4	S4	S4	S4	PV	F4	S1	PV	I4	PV	I4	I4
Potassium Persulfate	S4	I4	I4	I4	I3	S1	S1	S1	I1	I1	I1	I1
Potassium Sulfate	I4	I4	I4	I4	I3	I1	S1	S1	I1	I1	I1	I1
Pulpstock Chlorinated	NR	NR	S1	NR	S4	NR	NR	S4	NR	I1	NR	NR
Propionic Acid	NR	NR	NR	NR	F4	NR	PV	PV	PV	NR	NR	PV
Propylene Glycol	NR	I3	I3	I3	I3	I4	S4	S4	I4	I4	I4	I3
Pyridine	NR	NR	NR	NR	NR	NR	NR	NR	NR	NR	NR	NR
Salicylic Acid	S1	I4	I4	I4	I4	I4	S1	S1	I1	I1	I1	I1
Seawater	I1	I1	I1	I1	I1	I1	S1	S1	I1	I1	I1	I1
Silver Nitrate	S1	S1	S1	S1	S1	PV	S1	S1	I1	I1	I1	I1
Sodium Acetate	I4	I4	I4	I4	I4	I4	S1	S1	I1	I1	I1	I1
Sodium Bicarbonate	I4	I4	I4	I4	I4	I4	S1	S1	I1	I1	I1	I1
Sodium Bisulfate	I4	I4	I4	I4	I4	I4	S1	S1	I1	I1	I1	I1
Sodium Bisulfite	I4	I4	I4	I4	I4	I4	S1	S1	I1	I1	I1	I1

*May need synthetic fabric, carbon fillers or HP-201 topcoat. Consult a Dudick Corrosion-Proof, Inc. technical representative for more complete information on

1 Good to the maximum temperature of the product
2 High temperature service to 160°F (71°C)
3 Moderate Temperature Service to 140°F (60°C)
4 Warm Temperature Service to 100°F (37°C)

PV Performance varies with conditions. Consult Dudick for recommendations or testing
NR Not recommended
W No information available

Linings/Toppings					Toppings/Linings						Tiled Vessel Linings				Grouts
Protect/Clay					Protect/Line						Protect/Line				Protect/Line
300	600	700	800	900	100	300	600	700	800	900	300	600	700	800	100
S1	1	1	1	1	1	1	1	1	1	1	1	1	4	1	S1
S1	1	1	1	1	1	1	1	1	1	1	S1	1	1	1	S1
S4	4	4	4	3	4	S4	4	4	4	3	S4	4	4	4	S4
S4	3	1	1	1	1	S4	3	1	1	1	S4	3	1	3	S4
PV	4	4	4	4	4	PV	4	4	4	PV	PV	4	4	4	PV
S1	1	1	1	1	1	1	1	1	1	1	1	1	1	1	S1
S3	1	1	1	1	1	S3	1	1	1	1	S3	1	1	1	S3
S1	1	1	1	1	1	1	1	1	1	1	S1	1	1	1	S1
S4	3	1	1	1	NR	S4	3	1	3	1	S4	3	4	3	NR
S4	3	2	1	1	NR	S4	3	2	3	2	S4	3	2	3	NR
NR	4	3	4	3	NR	NR	4	3	4	3	NR	4	3	4	NR
NR	4	4	4	4	NR	NR	4	4	4	4	NR	4	4	4	NR
NR	S4	S4	S4	S4	NR	NR	S1	S1	S1	S1	NR	S4	S4	S4	NR
NR	NR	F4	NR	F4	NR	NR	NR	NR	NR	F4	NR	NR	F4	NR	NR
PV	PV	PV	PV	PV	PV	PV	PV	PV	PV	F4	PV	PV	PV	PV	NR
PV	3	1	3	1	PV	PV	3	1	3	1	PV	3	1	3	NR
PV	4	NR	4	PV	PV	PV	4	NR	4	4	PV	4	NR	4	PV
S4	1	1	1	1	1	1	1	1	1	1	S4	1	1	2	S3
S1	1	1	1	1	1	1	1	1	1	1	S1	1	1	2	S1
S3	1	1	1	1	1	1	1	1	1	1	S3	1	1	2	S1
S4	1	1	1	1	NR	S4	1	1	2	1	S4	1	1	2	NR
S1	3	1	1	1	PV	S1	3	1	1	1	S1	3	1	1	S1
S1	PV	S4	S4	S4	S1	S1	PV	S4	2	1	S1	PV	S4	PV	NR
PV	1	PV	1	1	PV	PV	1	PV	1	1	PV	1	PV	1	S4
S4	PV	PV	PV	PV	PV	S1	PV	PV	PV	S1	S4	PV	PV	PV	S4
NR	PV	PV	PV	PV	PV	S1	PV	PV	PV	PV	NR	PV	PV	PV	NR
S4	4	4	PV	PV	4	S4	4	4	PV	4	S4	4	4	PV	S4
S4	PV	NR	PV	PV	PV	S4	PV	NR	S2	S2	S4	PV	NR	PV	S4
PV	NR	NR	NR	PV	NR	PV	NR	NR	F4	S4	PV	NR	NR	NR	NR
NR	1	1	1	1	NR	NR	1	1	1	1	NR	1	1	1	NR
S4	PV	F4	PV	PV	3	S4	PV	F4	PV	PV	S4	PV	F4	PV	S4
S4	PV	F4	PV	PV	3	S4	PV	F4	PV	PV	S4	PV	F4	PV	S4
S4	1	PV	1	1	PV	PV	1	PV	1	1	S4	1	PV	1	NR
S4	4	1	1	1	4	S4	4	1	4	1	S4	4	1	4	S3
S4	4	4	4	4	PV	S4	1	1	1	1	S4	4	4	4	S4
S4	1	1	1	1	PV	S4	1	1	1	1	S4	1	1	1	S4
S1	4	NR	4	4	1	S1	4	NR	4	4	S1	4	NR	4	S1
S1	1	1	1	1	3	S1	1	1	1	1	S1	1	1	1	S1
S1	1	1	1	1	1	S1	1	1	1	1	S1	1	1	1	S1
S1	1	1	1	1	1	S1	1	1	1	1	S1	1	1	1	S1
S1	4	NR	4	4	1	S1	4	NR	4	4	S1	4	NR	4	S1
S1	NR	NR	NR	NR	1	S1	NR	NR	NR	4	S1	NR	NR	NR	S1
S1	1	1	1	1	1	S1	1	1	1	1	S1	1	1	1	S1
S1	PV	1	1	1	1	S1	PV	1	1	1	S1	PV	1	1	S1
S1	4	PV	4	4	PV	S1	4	PV	4	4	S1	4	PV	4	S3
S1	F1	F1	F1	F1	PV	S1	1	1	1	1	S1	1	1	1	S1
S1	1	1	1	1	1	S1	1	1	1	1	S1	1	1	1	S1
NR	NR	1	NR	NR	NR	NR	NR	1	NR	NR	NR	NR	1	NR	NR
PV	PV	NR	NR	PV	NR	PV	PV	NR	NR	PV	PV	PV	NR	NR	NR
4	4	4	4	3	4	4	4	4	4	3	4	4	4	4	4
NR	NR	NR	NR	NR	NR	NR	NR	NR	NR	NR	NR	NR	NR	NR	NR
S1	1	1	1	1	3	S1	1	1	1	1	S1	1	1	1	S1
S1	1	1	1	1	1	S1	1	1	1	1	S1	1	1	1	S1
S1	1	1	1	1	S1	S1	1	1	1	1	S1	1	1	1	S4
S1	1	1	1	1	1	S1	1	1	1	1	S1	1	1	1	S1
S1	1	1	1	1	1	S1	1	1	1	1	S1	1	1	1	S1
S1	1	1	1	1	1	S1	1	1	1	1	S1	1	1	1	S1
S1	1	1	1	1	1	S1	1	1	1	1	S1	1	1	1	S1

1 Good to the maximum temperature of the product
2 High temperature service to 160°F (71°C)
3 Moderate Temperature Service to 140°F (60°C)
4 Warm Temperature Service to 100°F (37°C)

PV Performance varies with conditions. Consult Dudick for recommendations or testing
NR Not recommended
W No information available

Protecto-Glass Linings/Toppings 300	600	700	800	900
S1	1	1	1	1
NR	4	4	4	4
S1	4	4	4	3
PV	PV	PV	PV	PV
S1	4	4	4	4
S1	1	1	1	1
S1	1	1	1	1
PV	S4	S4	S4	S4
S1	1	1	1	1
S4	3	3	3	3
S1	4	NR	4	3
S1	1	1	1	1
S1	1	NR	1	1
S1	3	3	3	3
PV	3	3	3	3
S1	3	3	3	3
S4	NR	NR	NR	NR
PV	PV	PV	PV	1
PV	4	4	4	4
PV	4	3	4	
S1	1	1	1	1
S4	PV	PV	4	1
S4	3	3	3	3
S4	PV	PV	PV	4
S4	NR	NR	NR	NR
NR	NR	NR	NR	NR
S4	2	2	PV	2
S4	PV	PV	PV	S4
PV	PV	PV	PV	4
S1	1	1	1	1
NR	NR	NR	NR	S3
PV	4	4	4	3
S4	PV	PV	PV	3
S4	4	4	4	4
S4	PV	NR	PV	4
S1	1	1	1	1
S4	PV	4	PV	4
S4	4	4	4	4
S1	1	1	1	1
S1	PV	NR	PV	1
S1	1	1	1	1
S4	4	4	4	4
S4	1	1	1	1
NR	4	3	3	3
PV	1	1	1	1
S1	1	1	1	1
S4	1	1	1	1
S1	1	1	1	1
S3	3	3	3	1
S1	1	1	1	1
S1	1	S1	1	1
S4	4	4	4	4
S4	PV	NR	PV	PV
NR	NR	NR	NR	NR
NR	NR	NR	NR	NR
S4	PV	NR	PV	NR
S4	PV	NR	4	NR
S1	1	1	1	1

Protecto-Line Toppings/Linings 100	300	600	700	800	900
1	S1	1	1	1	1
NR	NR	4	4	4	4
1	S1	1	3	1	1
PV	PV	NR	PV	PV	PV
4	S1	4	4	4	4
1	S1	1	1	1	1
1	S1	1	1	1	1
PV	PV	S4	4	4	4
1	S1	1	1	1	1
NR	S4	3	3	3	3
1	S1	4	NR	4	3
1	S1	1	1	1	1
1	S1	1	NR	1	1
1	S1	3	3	3	3
PV	PV	3	3	3	3
1	S1	2	2	2	2
4	S4	NR	NR	NR	NR
1	PV	PV	PV	PV	1
NR	PV	4	4	4	4
NR	PV	4	3	4	4
1	S1	1	1	1	1
4	S4	PV	PV	4	1
4	S4	3	3	3	3
S4	S4	PV	PV	S3	S3
PV	S4	4	4	2	2
PV	NR	4	4	S4	S4
PV	S4	2	2	2	2
PV	PV	PV	PV	S4	S4
PV	PV	PV	PV	S1	S1
2	S1	1	1	1	1
NR	NR	PV	4	4	3
PV	PV	4	4	4	3
S1	S4	PV	PV	S1	S1
4	S4	4	4	4	4
PV	S4	PV	NR	S4	4
1	S1	1	1	1	1
S3	S4	PV	4	4	4
4	S4	4	4	4	4
1	S1	1	1	1	1
1	1	PV	NR	1	1
1	S1	1	1	1	1
4	S4	4	4	3	3
S4	S4	1	1	1	1
NR	NR	4	3	3	3
S4	PV	1	1	1	1
1	S1	1	1	1	1
PV	S4	1	1	1	1
1	S1	1	1	1	1
2	S3	3	3	3	1
1	1	1	1	1	1
1	S1	1	S1	1	1
4	S4	4	4	4	4
PV	S4	PV	NR	S3	S3
NR	NR	NR	NR	NR	NR
NR	NR	NR	NR	NR	NR
4	S4	PV	NR	S4	S4
4	S4	PV	NR	S4	S4
1	1	1	1	1	1

Protecto-Seal Tiled Vessel Linings 300	600	700	800
S1	1	1	1
NR	4	4	4
S1	1	3	1
PV	NR	PV	PV
S1	4	4	4
S1	1	1	1
S1	1	1	1
PV	S4	4	S4
S1	1	1	1
S4	3	3	3
S1	4	NR	4
S1	1	1	1
S1	1	NR	1
S1	2	2	2
PV	3	3	3
S1	2	2	2
S4	NR	NR	NR
PV	PV	PV	PV
PV	4	4	4
PV	4	3	4
S1	1	1	1
S4	PV	PV	PV
S4	3	3	3
S4	PV	PV	PV
S4	NR	NR	NR
NR	NR	NR	NR
S4	2	2	PV
PV	PV	PV	PV
PV	PV	PV	PV
S1	1	1	1
NR	NR	NR	NR
PV	4	4	4
PV	PV	PV	PV
S4	4	4	4
S4	PV	NR	PV
S1	1	1	1
PV	PV	4	PV
S4	4	4	4
S1	1	1	1
1	PV	NR	PV
S1	1	1	1
PV	4	4	4
S4	1	1	1
NR	4	3	3
PV	1	1	1
S1	1	1	1
S4	1	1	1
S1	1	1	1
S3	3	3	3
S1	1	1	1
S1	1	S1	1
S4	4	4	4
S4	PV	NR	PV
NR	NR	NR	NR
NR	NR	NR	NR
S4	PV	NR	PV
S4	PV	NR	PV
S1	1	1	1

Grouts 100
S1
NR
S1
PV
S4
1
1
S1
NR
S1
S1
S1
S1
PV
S1
S4
NR
NR
S1
F4
S4
S4
NR
NR
S4
S4
S4
S3
NR
S4
S4
S4
NR
S3
S4
S4
S2
1
S2
S4
NR
NR
S3
S1
S4
S
S3
S1
S1
S4
PV
NR
NR
NR
S1

1 Good to the maximum temperature of the product
2 High temperature service to 160°F (71°C)
3 Moderate Temperature Service to 140°F (60°C)
4 Warm Temperature Service to 100°F (37°C)

PV Performance varies with conditions. Consult Dudick for recommendations or testing
NR Not recommended
NI No information available

Linings/Toppings					Toppings/Linings						Tiled Vessel Linings				Grouts
Protective Lining	300	600	700	800	900	Protective Lining	100	300	600	700	800	900	Tiled Vessel Lining	300	600	700	800	Grout	100
S1	1	1	1	1	1		1	1	1	1	1	1		1	1	4	1		S1
S1	1	1	1	1	1		1	1	1	1	1	1		S1	1	1	1		S1
S4	4	4	4	3			4	S4	4	4	4	3		S4	4	4	4		S4
S4	3	1	1	1			1	S4	3	1	1	1		S4	3	1	3		S4
PV	4	4	4	4			4	PV	4	4	4	PV		PV	4	4	4		PV
S1	1	1	1	1			1	1	1	1	1	1		1	1	1	1		S1
S3	1	1	1	1			1	S3	1	1	1	1		S3	1	1	1		S3
S1	1	1	1	1			1	1	1	1	1	1		S1	1	1	1		S1
S4	3	1	1	1			NR	S4	3	1	3	1		S4	3	4	3		NR
S4	3	2	1	1			NR	S4	3	2	3	2		S4	3	2	3		NR
NR	4	3	4	3			NR	NR	4	3	4	3		NR	4	3	4		NR
NR	4	4	4	4			NR	NR	4	4	4	4		NR	4	4	4		NR
NR	S4	S4	S4	S4			NR	NR	S1	S1	S1	S1		NR	S4	S4	S4		NR
NR	NR	F4	NR	F4			NR	NR	NR	NR	NR	F4		NR	NR	F4	NR		NR
PV	PV	PV	PV	PV			PV	PV	PV	PV	PV	F4		PV	PV	PV	PV		NR
PV	3	1	3	1			PV	PV	3	1	3	1		PV	3	1	3		NR
PV	4	NR	4	PV			PV	PV	4	NR	4	4		PV	4	NR	4		PV
S4	1	1	1	1			1	1	1	1	1	1		S4	1	1	2		S3
S1	1	1	1	1			1	1	1	1	1	1		S1	1	1	2		S1
S3	1	1	1	1			1	1	1	1	1	1		S3	1	1	2		S1
S4	1	1	1	1			NR	S4	1	1	2	1		S4	1	1	2		NR
S1	3	1	1	1			PV	S1	3	1	1	1		S1	3	1	1		S1
S1	PV	S4	S4	S4			S1	S1	PV	S4	2	1		S1	PV	S4	PV		NR
PV	1	PV	1	1			PV	PV	1	PV	1	1		PV	1	PV	1		S4
S4	PV	PV	PV	PV			PV	S1	PV	PV	PV	S1		S4	PV	PV	PV		S4
NR	PV	PV	PV	PV			PV	S1	PV	PV	PV	PV		NR	PV	PV	PV		NR
S4	4	4	PV	PV			4	S4	4	4	PV	4		S4	4	4	PV		S4
S4	PV	NR	PV	PV			PV	S4	PV	NR	S2	S2		S4	PV	NR	PV		S4
PV	NR	NR	NR	PV			NR	PV	NR	NR	F4	S4		PV	NR	NR	NR		NR
NR	1	1	1	1			NR	NR	1	1	1	1		NR	1	1	1		NR
S4	PV	F4	PV	PV			3	S4	PV	F4	PV	PV		S4	PV	F4	PV		S4
S4	PV	F4	PV	PV			3	S4	PV	F4	PV	PV		S4	PV	F4	PV		S4
S4	1	PV	1	1			PV	PV	1	PV	1	1		S4	1	PV	1		NR
S4	4	1	1	1			4	S4	4	1	4	1		S4	4	1	4		S3
S4	4	4	4	4			PV	S4	1	1	1	1		S4	4	4	4		S4
S4	1	1	1	1			PV	S4	1	1	1	1		S4	1	1	1		S4
S1	4	NR	4	4			1	S1	4	NR	4	4		S1	4	NR	4		S1
S1	1	1	1	1			3	S1	1	1	1	1		S1	1	1	1		S1
S1	1	1	1	1			1	S1	1	1	1	1		S1	1	1	1		S1
S1	1	1	1	1			1	S1	1	1	1	1		S1	1	1	1		S1
S1	4	NR	4	4			1	S1	4	NR	4	4		S1	4	NR	4		S1
S1	NR	NR	NR	NR			1	S1	NR	NR	NR	4		S1	NR	NR	NR		S1
S1	1	1	1	1			1	S1	1	1	1	1		S1	1	1	1		S1
S1	PV	1	1	1			1	S1	PV	1	1	1		S1	PV	1	1		S1
S1	4	PV	4	4			PV	S1	4	PV	4	4		S1	4	PV	4		S3
S1	F1	F1	F1	F1			PV	S1	1	1	1	1		S1	1	1	1		S1
S1	1	1	1	1			1	S1	1	1	1	1		S1	1	1	1		S1
NR	NR	1	NR	NR			NR	NR	NR	1	NR	NR		NR	NR	1	NR		NR
PV	PV	NR	NR	PV			NR	PV	PV	NR	NR	PV		PV	PV	NR	NR		NR
4	4	4	4	3			4	4	4	4	4	3		4	4	4	4		4
NR	NR	NR	NR	NR			NR	NR	NR	NR	NR	NR		NR	NR	NR	NR		NR
S1	1	1	1	1			3	S1	1	1	1	1		S1	1	1	1		S1
S1	1	1	1	1			1	S1	1	1	1	1		S1	1	1	1		S1
S1	1	1	1	1			S1	S1	1	1	1	1		S1	1	1	1		S4
S1	1	1	1	1			1	S1	1	1	1	1		S1	1	1	1		S1
S1	1	1	1	1			1	S1	1	1	1	1		S1	1	1	1		S1
S1	1	1	1	1			1	S1	1	1	1	1		S1	1	1	1		S1
S1	1	1	1	1			1	S1	1	1	1	1		S1	1	1	1		S1

ck

Key

Material will withstand constant flow or immersion service
Material is suitable for intermittent or Spillage service
Material will tolerate fumes only

ons. Consult testing

	Light Duty Linings/Coatings						Toppings		Heavy Duty Linings				Grouts
	Protecto-Coat 300	600	700	800	900	1000	Protecto-Crete 300	800	Protecto-Flake 600	700	800	900	
te	I4	I4	I4	I4	I4	I1	S1	S1	I1	I1	I1	I1	
nate	I4	PV	PV	PV	I4	I1	S1	S4	I3	PV	I4	I3	
te	PV	I4	I4	I4	I4	I4	S1	S1	I1	I1	I1	I1	
de	I1	I1	I1	I1	I1	I1	S1	S1	I1	I1	I1	I1	
re (50%)	NR	S4	S4	S4	S3	S4	S4	S4	I4	I4	I4	I3	
nate	S4	I4	I4	I4	I3	S4	S1	S1	PV	I1	PV	I1	
de	S4	I4	I4	I4	I3	I4	S1	S1	I1	I1	I1	I1	
omate	S4	I4	I4	I4	I3	I4	S1	S1	PV	I4	I4	I3	
de*	S4	NR	NR	NR	I4	PV	S4	S4	NR	NR	NR	NR	
xide (10%)*	I4	S1	NR	S1	I1	I1	S1	S1	I4	NR	I4	I1	
xide (50%)*	S4	NR	NR	NR	I1	I1	S1	S4	NR	NR	NR	I1	
chlorite (3%)*	F4	NR	NR	S4	S4	F1	S3	S1	NR	NR	I4	I3	
chlorite (17%)*	NR	NR	NR	PV	S4	NR	S4	S4	NR	NR	PV	S4	
de	I4	I4	I4	I4	I4	I1	S4	NR	PV	NR	PV	S4	
onate	S4	I4	I4	I4	I4	I1	S1	S1	I1	I1	I1	I1	
te	I4	I4	I4	I4	I4	I1	S1	S1	I1	I1	I1	I1	
de	I4	PV	PV	PV	I4	I1	S1	S1	I4	PV	I4	I4	
e	I4	I4	I4	I4	I4	I1	S1	S1	I1	I1	I1	I1	
ite	I4	I4	I4	I4	I4	I1	S1	S1	I1	I1	I1	I1	
sulfate (Hypo)	I4	I4	I4	I4	I3	S1	S1	S1	I1	I1	I1	I1	
	PV	I4	I4	I4	I3	I1	PV	S1	I1	I1	I1	I1	
	S4	PV	PV	PV	I4	PV	S4	S1	I2	I2	I2	I2	
	I4	PV	PV	PV	I4	PV	S3	S3	I4	I4	I4	I4	
	I1	I1	I1	I1	I1	I1	S1	S1	I1	I1	I1	I1	
(Paper)	I4	I4	PV	I4	I4	I1	S1	S1	I1	PV	I1	I1	
e	F1	S4	S4	S4	S4	I1	S1	S1	F4	I1	I1	I1	
e	F4	PV	PV	PV	PV	S1	S1	S1	I4	I4	I4	I4	
(2%-20%)	S4	S2	S2	S2	S2	S2	S3	S1	I1	I1	I1	I1	
(20%-50%)	F4	S2	S2	S2	S2	F1	S4	S1	I3	I3	I3	I2	
(50%-70%)	F4	F3	F3	F3	F2	F4	NR	NR	I4	I4	I4	I2	
(70%-80%)	NR	PV	PV	PV	F4	NR	NR	NR	PV	PV	PV	I4	
(80%-98%)	NR	PV	PV	PV	F4	NR	NR	NR	NR	NR	NR	NR	
id	S4	I4	I4	I4	I4	S4	S1	S1	I1	I1	I1	I1	
	I4	I4	I4	I4	I4	I1	PV	S1	I1	I1	I1	I1	
	PV	I4	I4	I4	I4	PV	PV	S4	I1	I1	I1	I1	
	I4	I4	I4	I4	I3	S1	S1	S1	I1	I1	I1	I1	
hane	PV	NR	NR	NR	F4	NR	S4	NR	PV	PV	PV	PV	
ride	NR	NR	NR	NR	NR	NR	NR	NR	NR	NR	NR	NR	
rachloride	F4	I4	I4	I4	I3	S4	S1	S1	I1	I1	I1	I1	
	NR	NR	NR	NR	F4	NR	PV	NR	I4	PV	I4	PV	
ronic Acid	S3	I4	I4	I4	I3	S4	S1	S1	I1	I1	I1	I1	
ic Acid (20%)	NR	F4	F4	F4	I4	F4	NR	S1	I4	I4	I4	I4	
ene	NR	NR	NR	NR	F4	NR	PV	NR	PV	NR	PV	PV	
osphate	I4	I4	NR	I4	I4	I4	S1	S4	I3	NR	I3	I3	
	S4	PV	PV	PV	F4	NR	S1	NR	PV	PV	PV	PV	
ctants	PV	I4	I4	I4	I4	PV	S1	S1	I1	I1	I1	I1	
ons	I4	I4	I4	I4	I4	I4	S1	S1	I1	I1	I1	I1	
	F4	I1	I1	I1	I1	I4	S1	S1	I1	I1	I1	I1	
led & demineralized	I4	I4	I4	I4	I4	I4	S1	S1	I1	I1	I1	I1	
r (Paper)	I4	I4	PV	I4	I3	I4	S1	S1	I1	PV	I1	I1	
ol)	NR	NR	NR	NR	NR	NR	PV	NR	I4	PV	I4	I4	
	I4	I4	I4	I4	I3	I4	S1	S1	I1	I1	I1	I1	
Sulfate)	S3	I4	I4	I4	I3	S1	S1	S1	I1	I1	I1	I1	

*May need synthetic fabric, carbon fillers or HP-201 topcoat. Consult a Dudick Corrosion-Proof, Inc. technical representative for more complete information on these products.

Temperature Limits

Product	Substrate				Notes
Series *(Chemical Property)*	F°	C°	F°	C°	
Protecto-Coat	*Metal*		*Concrete/Steel*		
300 *(Adduct Cured Epoxy)*	100	37[1]	100	37[2]	[1] Steel: Constant Flow; Steel Dry or Intermittent Spills: 200°F (93°C) to 350°F (96°C)
600 *(Bisphenol Polyester)*	130	54	130	54	
700 *(Halogenated Polyester)*	130	54	130	54	[2] Concrete: Constant Flow
800 *(Vinyl Ester)*	130	54	130	54	
900 *(High Molecular Weight Vinyl Ester)*	130	54	130	54	
1000 *(Coal Tar)*	130	54	130	54	
Protecto-Crete	*Metal*		*Concrete*		
300 *(Adduct Cured Epoxy)*	Not Recommended		300	150[3]	[3] Intermittent Spills, otherwise maximum temperature is 150°F
800 *(Vinyl Ester)*	Not Recommended		250	120	
Protecto-Flake	*Metal*[4]		*Concrete*		
600 *(Bisphenol Polyester)*	180	83	160	71	[4] Metal: Immersion; Dry Metal: 250°F (121°C)
700 *(Halogenated Polyester)*	180	83	160	71[4]	
800 *(Vinyl Ester)*	180	83	160	71	
900 *(High Molecular Weight Vinyl Ester)*	180	83	160	71	
Protecto-Glass	*Metal*[5]		*Concrete*		
300 *(Adduct Cured Epoxy)*	150	65	250	121	[5] Steel: Constant Flow
600 *(Bisphenol Polyester)*	160	71	140	60	
700 *(Halogenated Polyester)*	160	71	140	60	
800 *(Vinyl Ester)*	160	71	140	60	
Protecto-Line	*Metal*[6]		*Concrete*[7]		
100 *(Amine Cured Epoxy)*	180	82	160	71	[6] Steel: Constant Flow and Immersion
300 *(Adduct Cured Epoxy)*	160	71	160	71	
600 *(Bisphenol Polyester)*	160	71	160	71	[7] Concrete: Constant Flow
700 *(Halogenated Polyester)*	160	71	160	71	
800 *(Vinyl Ester)*	160	71	160	71	
900 *(High Molecular Weight Vinyl Ester)*	160	71	160	71	
Protecto-Seal	*Metal*[8]		*Tile/Concrete*[4]		
300 *(Adduct Cured Epoxy)*	160	71	160	71	[8] Steel Tile: Constant Flow and Immersion
600 *(Bisphenol Polyester)*	180	83	180	83	
700 *(Halogenated Polyester)*	180	83	180	83	
800 *(Vinyl Ester)*	180	83	180	83	
Grouts	*Metal*		*Concrete*		
100 *(Amine Cured Epoxy)*	Not Applicable		160	71	
600 *(Bisphenol Polyester)**	Not Applicable		160	71[9]	[9] Grout 600/700 pours not to exceed 2 inches in depth.
700 *(Halogenated Polyester)**	Not Applicable		160	71[9]	

* ***Note:*** For more information on Grouts 600 and 700, please consult with a Dudick technical representative.

Products

There is a Dudick Corrosion-Proof product to protect virtually any area of a plant and any piece of production, storage or handling equipment from the corrosive effects of moisture and chemical attack.

Seven standard product lines are available and each offers a range of products developed to meet the special requirements encountered in most manufacturing or processing environments. However, any product in any system can be modified to tailor the physical, mechanical, environmental or application properties to the unique needs of a specific application.

A series of catalogs is available describir the specific properties of each product i each of these systems. Of course, our factory personnel are available to work with your architect, or plant managemer engineering, and maintenance personne to recommend a standard or custom for mulated Dudick Corrosion-Proof product that meets your exact performance and durability requirements.

1.

Protecto-Coat, *a series of high-build, glass-flake filled coatings for fast economical application by brush, roller or spray. Corrosion protection can range from mild atmospheric exposures to immersion, depending on the resin base and the finished DFT.*

2.

Protecto-Crete. *an unreinforced monolithic floor topping of amine adduc cured epoxy. It is several times stronger than concrete and resistant to dilute chemical spills.*

3.

Protecto-Flake, *a series of heavily glass-flake filled, trowel applied tank linings especially suitable for continuous immersion in high concentrations at high temperature. Two fire retardant grades are available as standard products in this system, as well as offering FDA approval for food contact.*

4.

Protecto-Glass systems use the original *glass mat reinforcement principal to achieve good corrosion resistance to a broad range of chemical elements inclu ing oxidizing agents and hot alkalis.*

5.

Protecto-Line, *a reinforced monolithic vessel lining or floor topping system offering FDA approval. A variety of resins, reinforcing fabrics and curing agents provide chemical resistance ranging from mild ambient exposures to hot spills of strong acids.*

6.

Protecto-Seal, *a series of reinforced tile chest relining products developed especially for the needs of the pulp and pap industry. A choice of epoxy, polyester o vinyl ester resin formulations provides chemical protection from pH 1-14.*

Grouts *provide the superior corrosion p tection and high compressive strength t permanently anchor heavy equipment.*

APPENDIX D-10, DATA SHEET #3

TECHNICAL SPECIFICATIONS FOR CARBOMASTIC SYSTEM
MANUFACTURED BY CARBOLINE COMPANY

carboline®

CARBOMASTIC® #14

8 mil exposed

350 HANLEY INDUSTRIAL COURT • ST. LOUIS, MO. 63144 • 314-644-1000

SELECTION DATA

GENERIC TYPE: Epoxy-coal tar. Part A and Part B mixed prior to application.

GENERAL PROPERTIES: A heavy duty, high build, epoxy-coal tar coating for the protection of steel and concrete in immersion service. Can be applied at thicknesses up to 12 mils (305 microns) per coat. Cures to a hard, smooth finish. Simple 1:1 mixing ratio. Both components have low viscosity resulting in easy mixing.

RECOMMENDED USES: Lining for tanks, piping, trenches, sumps and as heavy duty maintenance coating for steel and concrete — splash, spillage and fumes. Widely used for protection of offshore structures, marine installations, and pilings. Also as lining for barges and tankers carrying sour crude, petroleum products and salt water ballast. Recommended for concrete and steel surfaces in sewage treatment plants, paper mills, chemical plants, etc. Excellent protection for underground surfaces.

NOT RECOMMENDED FOR: Immersion in aromatic or ketone solvents; strong oxidizing acids.

CHEMICAL RESISTANCE GUIDE:

Exposure	Immersion	Splash and Spillage	Fumes
Acids	Very Good	Excellent	Excellent
Alkalies	Very Good	Excellent	Excellent
Solvents	Good	Very Good	Very Good
Salt	Excellent	Excellent	Excellent
Water	Excellent	Excellent	Excellent

TEMPERATURE RESISTANCE: (Non-immersion)
Continuous: 200°F (93°C)
Non-continuous: 250°F (121°C)
For Immersion, temperature depends on exposure, but maximum is 130°F (54°C)

FLEXIBILITY: Fair

WEATHERING: Good (chalks)

ABRASION RESISTANCE: Very Good

SUBSTRATES: Apply to properly prepared concrete, steel or others as recommended.

TOPCOAT REQUIRED: None required. May be topcoated with Carboline antifouling paints as directed. Coal tar bleedthrough is likely with most topcoats.

COMPATIBILITY WITH OTHER COATINGS: Obtain specific recommendation before applying over old coatings. Coating is self-priming. Can also be applied over thin film inorganic zincs, catalyzed epoxies or others as recommended. Acceptable primers for steel are Carbo Weld ® 11 or Carbomastic #3. For concrete an epoxy surfacer may be necessary.

SPECIFICATION DATA

THEORETICAL SOLIDS CONTENT OF MIXED MATERIAL:

	By Volume
Carbomastic #14	75% ± 1%

RECOMMENDED DRY FILM THICKNESS PER COAT: 8 mils (205 microns)

THEORETICAL COVERAGE PER MIXED GALLON*
1203 mil sq. ft. (29.4 sq.m/1 @ 25 microns)
150 sq. ft. at 8 mils (3.7 sq.m/1 @ 205 microns)

*NOTE: Material losses during mixing and application will vary and must be taken into consideration when estimating job requirements.

SHELF LIFE: 2 years

COLORS: Black and Dark Red only

GLOSS: High initially, becomes flat

ORDERING INFORMATION

Prices may be obtained from Carboline Sales Representative or Main Office. Terms — Net 30 days.

SHIPPING WEIGHT:

	2's	10's
Carbomastic #14	28 lbs. (12.7 kgs.)	135 lbs. (61.3 kgs.)
Carbomastic Thinner	9 lbs. in 1's (4.1 kgs.)	45 lbs. in 5's (20.4 kgs.)
Surface Preparation #1	9 lbs. in 1's (4.1 kgs.)	45 lbs. in 5's (20.4 kgs.)

FLASH POINT: (Pensky-Martens Closed Cup)

Carbomastic #14 Part A	78°F (26°C)
Carbomastic #14 Part B	68°F (14°C)
Carbomastic Thinner	73°F (23°C)
Surface Preparation #1	60°F (16°C)

May 77-Replaces Oct. 76N

To the best of our knowledge the technical data contained herein are true and accurate at the date of issuance and are subject to change without prior notice. User must contact Carboline to verify correctness before specifying or ordering. No guarantee of accuracy is given or implied. We guarantee our products to conform to Carboline quality control. We assume no responsibility for coverage, performance or injuries resulting from use. Liability, if any, is limited to replacement of products. Prices and cost data if shown, are subject to change without prior notice. NO OTHER WARRANTY OR GUARANTEE OF ANY KIND IS MADE BY THE SELLER, EXPRESS OR IMPLIED, STATUTORY, BY OPERATION OR LAW, OR OTHERWISE, INCLUDING MERCHANTABILITY AND FITNESS FOR A PARTICULAR PURPOSE.

APPLICATION INSTRUCTIONS

These instructions are not intended to show product recommendations for specific service. They are issued as an aid in determining correc surface preparation, mixing instructions, and application procedure. It is assumed that the proper product recommendations have been made These instructions should be followed closely to obtain the maximum service from the materials.

SURFACE PREPARATIONS: Remove any oil or grease from surface to be coated with clean rags soaked in Carboline Thinner #2 or Toluol.

Steel: For immersion service, dry abrasive blast to a White Metal finish in accordance with SSPC-SP 5-63 to a degree of cleanliness in accordance with NACE #1 to obtain a 2 to 3 mil (50-75 micron) blast profile. For Non-immersion, dry abrasive blast to a Commercial finish in accordance with SSPC-SP 6-63 to a degree of cleanliness in accordance with NACE #3 to obtain a 2 to 3 mil (50-75 micron) blast profile. Acceptable for non-immersion SSPC-SP 3-63, power tool cleaning.

Concrete: Do not coat concrete treated with hardening solutions unless test patch indicates satisfactory adhesion. Do not apply coating unless concrete has cured at least 28 days @ 75°F (24°C) and 50% RH or equivalent time. Apply to properly prepared concrete that was acid etched or sweep sandblasted.

MIXING: Mix separately, then combine and mix in the following proportions.

	2 Gal. Kit	10 Gal Kit
Carbomastic #14 Part A	1 Gal.	5 Gals.
Carbomastic #14 Part B	1 Gal.	5 Gals.

Thin up to 25% by volume with Carbomastic Thinner.

POT LIFE: 8 hours at 75°F (24°C) and less at higher temperatures. Pot life ends when coating loses body and begins to sag.

APPLICATION TEMPERATURES:

	Material	Surfaces
Normal	65-85°F (18-29°C)	60-95°F (16-35°C)
Minimum	55°F (13°C)	50°F (10°C)
Maximum	90°F (32°C)	120°F (49°C)

	Ambient	Humidity
Normal	60-90°F (16-32°C)	20-75%
Minimum	50°F (10°C)	0%
Maximum	120°F (49°C)	85%

Special thinning and application techniques may be required above or below normal conditions.

SPRAY: Use adequate air volume for correct operation. Hold gun 8-10 inches from the surface and at a right angle to the surface.

Use a 50% overlap with each pass of the gun. On irregular surfaces, coat the edges first, making an extra pass later.

NOTE: The following equipment has been found suitable, however, equivalent equipment may be substituted.

Conventional: Use 1/2" I.D. Mat'l. Hose.

Mfr. & Gun	Fluid Tip	Air Cap
Binks #18 or #62	67	67 PB
DeVilbiss P-MBC or JGA	D	64
	approx .086" I.D.	approx 11 cfm @ 30 psi

Airless: Use 1/2" I.D. Mat'l. Hose.

Mfr. & Gun*	Pump
Graco 207-300	Bulldog 30:1
Binks Model 520	Jupiter 80
Either of the above (DeVilbiss)	Huskie

*Revers-A-Clean tip is recommended. Use a .031" tip with 2400 psi.

BRUSH: Use medium bristle brush. Use full brush to apply — avoid rebrushing.

DRYING TIMES:

Between coats:	50°F (10°C)	72 hours
	60°F (16°C)	36 hours
	75°F (24°C)	18 hours
	90°F (32°C)	8 hours

In sunlight, topcoat within 36 hours or wipe surface with Carboline Surface Preparation #1, to insure good adhesion of next coat.

Final cure: For immersion. Half the time for non-immersion.	60°F (16°C)	10 days
	75°F (24°C)	7 days
	90°F (32°C)	3 days

Force curing is suggested for all tank linings.

If final cure is attained and recoat is necessary, special surface preparation may be necessary. Excessive film thickness or conditions of poor ventilation require longer dry times. Excessive humidity or condensation on the surface during curing may result in a surface haze or blush. This should be removed by water washing before recoating. In extreme cases, this can interfere with the cure of the coating.

CLEAN UP: Use Carboline Thinner #2 or Xylol.

STORAGE CONDITIONS:

Temperature: 45-110°F (7-43°C) Humidity: 0-100%

For more detailed information please consult specific Carboline Application Guides.

CAUTION: CONTAINS FLAMMABLE SOLVENTS. KEEP AWAY FROM SPARKS AND OPEN FLAMES. IN CONFINED AREAS WORKMEN MUST WEAR FRESH AIRLINE RESPIRATORS. HYPERSENSITIVE PERSONS SHOULD WEAR GLOVES OR USE PROTECTIVE CREAM. ALL ELECTRIC EQUIPMENT AND INSTALLATIONS SHOULD BE MADE AND GROUNDED IN ACCORDANCE WITH THE NATIONAL ELECTRICAL CODE. IN AREAS WHERE EXPLOSION HAZARDS EXIST, WORKMEN SHOULD BE REQUIRED TO USE NONFERROUS TOOLS AND TO WEAR CONDUCTIVE AND NONSPARKING SHOES.

350 HANLEY INDUSTRIAL COURT carboline ST. LOUIS, MO. 63144 • 314-644-100

product data sheet

carboline®

CARBOMASTIC® #3

8 mil primer

350 HANLEY INDUSTRIAL COURT • ST. LOUIS, MO. 63144 • 314-644-1000

SELECTION DATA

GENERIC TYPE: Epoxy-coal tar. Part A and Part B mixed prior to application.

GENERAL PROPERTIES: A unique heavy duty high build epoxy-coal tar primer containing inhibiting pigments. Designed to give maximum protection against sub-film corrosion of steel. Has simple one to one mixing ratio and long pot life. Excellent chemical resistance including immersion service. Can be used over power-tool cleaned surfaces in non-immersion service. Brown color provides application contrast when used with black epoxy-coal tar topcoats. Easily applied by conventional or airless spray at recommended 8 mil (205 microns) thickness. May be used as a primer or topcoat depending upon service.

RECOMMENDED USES: Carbomastic #3 is generally used as a prime coat under Carbomastic #14 for an epoxy-coal tar system. Uses would include: heavy duty maintenance coatings in water, brine, caustic and acid environments, lining for water, brine and crude oil storage tanks. Having outstanding resistance to H_2S, it is widely used in water and sewage plants and pulp and paper mills. Also used on off-shore drilling structures and marine installations. Excellent protection against severe splash and spillage of acids and alkalies.

NOT RECOMMENDED FOR: Immersion in aromatic or ketone solvents; strong oxidizing exposures.

CHEMICAL RESISTANCE GUIDE:

Exposure	Immersion	Splash and Spillage
Acids	Very Good	Excellent
Alkalies	Excellent	Excellent
Solvents	Good	Very Good
Salt	Excellent	Excellent
Water	Excellent	Excellent

TEMPERATURE RESISTANCE: (non-immersion)

Continuous	200°F (93°C)
Non-continuous	280°F (138°C)

Temperature resistance in immersion depends upon the composition of the immersion solution.

FLEXIBILITY: Fair

WEATHERING: Good (chalks).
Nov. 76-N

ABRASION RESISTANCE: Good

SUBSTRATES: Apply to properly prepared steel or other metallic surfaces as recommended.

TOPCOAT REQUIRED: Carbomastic #14 is typically used.

COMPATIBILITY WITH OTHER COATINGS: Designed as a primer for application directly to the substrate. May be applied over catalyzed epoxies, phenolics or others as recommended.

SPECIFICATION DATA

THEORETICAL SOLIDS CONTENT OF MIXED MATERIAL:

	By Volume
Carbomastic #3	76 ± 1%

RECOMMENDED DRY FILM THICKNESS PER COAT:
8 mils (205 microns)

THEORETICAL COVERAGE PER MIXED GALLON:*
1219 mil sq. ft. (29.8 sq.m/1 @ 25 microns)
152 sq. ft. at 8 mils (3.7 sq.m/1 @ 205 microns)

*NOTE: Material losses during mixing and application will vary and must be taken into consideration when estimating job requirements.

SHELF LIFE: 2 years

COLORS: Brown only

ORDERING INFORMATION

Prices may be obtained from Carboline Sales Representative or Main Office. Terms — Net 30 days.

SHIPPING WEIGHT:

	2's	10's
Carbomastic #3	36 lbs. (16.3 kgs)	155 lbs. (70.4 kgs)
Carbomastic Thinner	9 lbs in 1's (4.1 kgs)	45 lbs in 5's (20.4 kgs)

FLASH POINT: (Pensky-Martens Closed Cup)

Carbomastic #3 Part A	57°F (14°C)
Carbomastic #3 Part B	84°F (34°C)
Carbomastic Thinner	73°F (23°C)

To the best of our knowledge the technical data contained herein are true and accurate at the date of issuance and are subject to change without prior notice. User must contact Carboline to verify correctness before specifying or ordering. No guarantee of accuracy is given or implied. We guarantee our products to conform to Carboline quality control. We assume no responsibility for coverage, performance or injuries resulting from use. Liability, if any, is limited to replacement of products. Prices and cost data if shown, are subject to change without prior notice. NO OTHER WARRANTY OR GUARANTEE OF ANY KIND IS MADE [illegible] BY OPERATION OF LAW OR OTHERWISE.

APPLICATION INSTRUCTIONS

These instructions are not intended to show product recommendations for specific service. They are issued as an aid in determining correct surface preparation, mixing instructions, and application procedure. It is assumed that the proper product recommendations have been made. These instructions should be followed closely to obtain the maximum service from the materials.

SURFACE PREPARATIONS: Remove any oil or grease from surface to be coated with clean rags soaked in Carboline Thinner #2 or Toluol.

Steel: For immersion service, dry abrasive blast to a White Metal finish in accordance with SSPC-SP 5-63 to a degree of cleanliness in accordance with NACE #1 to obtain a 2 to 3 mil (50-75 microns) blast profile.
For Non-Immersion service, dry abrasive blast to a Commercial Blast finish in accordance with SSPC-SP 6-63 to a degree of cleanliness in accordance with NACE #3 to obtain a 2 to 3 mil blast profile. Power tool cleaning is acceptable for non-immersion; SSPC-SP3.

MIXING: Mix separately, then combine and mix in the following proportions:

	2 Gal Kit.	10 Gal Kit
Carbomastic #3 Part A	1 Gal.	5 Gals.
Carbomastic #3 Part B	1 Gal.	5 Gals.

Thin up to 25% by volume with Carbomastic Thinner.

POT LIFE: 6 hours at 75°F (24°C) and less at higher temperatures. Pot life ends when coating loses body and begins to sag.

APPLICATION TEMPERATURES:

	Material	Surfaces
Normal	65-80°F (18-27°C)	65-85°F (18-27°C)
Minimum	50°F (10°C)	50°F (10°C)
Maximum	90°F (32°C)	120°F (49°C)

	Ambient	Humidity
Normal	65-85°F (18-29°C)	NA
Minimum	50°F (10°C)	0%
Maximum	120°F (49°C)	85%

Special thinning and application techniques may be required above or below normal condition.

SPRAY: Use adequate air volume for correct operation. Hold gun 8-10 inches from the surface and at a right angle to the surface.

Use a 50% overlap with each pass of the gun. On irregular surfaces, coat the edges first, making an extra pass later.

NOTE: The following equipment has been found suitable, however, equivalent equipment may be substituted.

Conventional: Use 1/2" I.D. Mat'l. Hose.

Mfr. & Gun	Fluid Tip	Air Cap
Binks #18 or #62	67	67 PB
DeVilbiss P-MBC or JGA	D approx .086" I.D.	64 approx 11 cfm @ 30 psi

Airless: Use 1/2" I.D. Mat'l. Hose.

Mfr. & Gun	Pump*
DeVilbiss JGB-507	QHA-508
Graco 205-591	President 30:1 or Bulldog 30:1
Binks Model 500	Mercury 5C

*Teflon packings are recommended and available from pump manufacturer. Use a .026" tip with 2400 psi.

BRUSH OR ROLLER: Apply with clean, short-bristled brush and avoid rebrushing.

DRYING TIMES: (at recommended thickness)

Between coats: (Note 2)
4 days @ 50°F (10°C)
48 hours @ 60°F (16°C)
24 hours @ 75°F (24°C)
12 hours @ 90°F (32°C)

Final cure:*

Immersion service:		Non-immersion service:
14 days @ 50°F (10°C)	or	4 days @ 50°F (10°C)
7 days @ 75°F (24°C)		2 days @ 75°F (24°C)
4 days @ 90°F (32°C)		1 day @ 90°F (32°C)

*If Final cure is attained and recoat is necessary, special surface preparation may be required.

NOTE 1: Excessive humidity or condensation on surface during curing may result in a surface haze, or blush, which must be washed off with water before recoating.

NOTE 2: If exposed to sunlight for more than 36 hours wipe with Carboline Surface Preparation #1 before topcoating.

CLEAN UP: Use Carboline Thinner #2 or xylol.

STORAGE CONDITIONS:

Temperature: 45-110°F (7-43°C) Humidity: 0-100%

For more detailed information please consult specific Carboline Application Guides.

CAUTION: CONTAINS FLAMMABLE SOLVENTS. KEEP AWAY FROM SPARKS AND OPEN FLAMES. IN CONFINED AREAS WORKMEN MUST WEAR FRESH AIRLINE RESPIRATORS. HYPERSENSITIVE PERSONS SHOULD WEAR GLOVES OR USE PROTECTIVE CREAM. ALL ELECTRIC EQUIPMENT AND INSTALLATIONS SHOULD BE MADE AND GROUNDED IN ACCORDANCE WITH THE NATIONAL ELECTRICAL CODE. IN AREAS WHERE EXPLOSION HAZARDS EXIST, WORKMEN SHOULD BE REQUIRED TO USE NONFERROUS TOOLS AND TO WEAR CONDUCTIVE AND NONSPARKING SHOES.

350 HANLEY INDUSTRIAL COURT carboline ST. LOUIS, MO. 63144 • 314-644-1000

APPENDIX D-10, DATA SHEET #4

CHEMICAL COMPATIBILITY CHART
CEILCOTE

Master Builders Technologies Corrosion Resistance Guide

CEILCOTE® CORROSION CONTROL PRODUCTS

Monolithic Linings

Monolithic Flooring

Heavy-Duty Coatings

Master Builders Technologies

Introduction

Over 340 corrosive environments are classified by their effect on CEILCOTE CORROSION CONTROL PRODUCTS, as determined by laboratory test and field experience.

Many applications are complicated by mixtures of chemicals and unexpected temperature fluctuations during operation. There may also be difficult conditions during product installation.

For these reasons, it is wise to consult Master Builders Technologies before final material selection in questionable situations.

How to use this guide

Example: A steel tank for electroplating using acid-copper solution at 160°F. Select the best combination of materials to protect the tank interior and exterior, floor and trenches.

1. Tank Lining

Locate "Copper Plating, Acid" in the left hand column. Since the tank interior may be subjected to possible impact from falling parts, this should be a heavy duty polyester lining. All of these are rated A-1, so you have a choice of Ceilcrete, Flakeline 100 Series or Ceilcote Lining System. Flakeline could be ruled out if there will actually be impact or abrasion. Choice between a Ceilcrete or a Ceilcote Lining series product will depend on economy or customer preference.

2. Tank Exterior

Refer to the columns under "Light Duty Linings." All are rated A-1 except Flakeline 600, rated A-2. Any of these products can be used, since those rated suitable for immersion are more than enough for spillage. Therefore, we use either one of the two lower cost products — Flakeline 300 or 600. Also refer to the CeilGard section of the chart.

3. Floor and Trenches

Consider first that the floor is subjected to spills (2) and the trench to immersion (1). Consider also that spills cool rapidly; the floor protection may see 140°F. or less. One of the Ceilcretes would be the best protection. However, if the housekeeping will be good and spills infrequent, you may select Corocrete T, which is good to 120°F., and is more economical.

For trench lining, consider that when a tank is emptied, preferably through a pipe from tank to trench, there may be exposure to 160°F. You, therefore, require a heavy duty lining; one of the Ceilcretes would be most economical.

Key to Chemical Resistant Chart

Rating	Meaning
A	Good to maximum temperature of product. In many cases, the maximum temperature recommendation varies for the type of substrate or type of service. See the temperature limit chart (opposite page).
B	Good to 180°F. (83°C.)
C	Good to 140°F. (60°C.)
D	Good to 120°F. (49°C.)
E	Good to 100°F. (38°C.)

Rating "E" is used for ambient temperature conditions.

1. Immersion, constant flow or condensing vapors. This condition applies to tanks, stacks, trenches, and floors with frequent spills that are not washed frequently or which have poor drainage.
2. Occasional splash or spillage applies to tank exteriors, walls, and floors that are not washed to dilute and remove spills.
3. Fumes that are not likely to condense.

T Varies with conditions and requires testing. This rating is given when we think the product will work, but have no test or service data.

N Not recommended. There are many cases where products rated N can be used for short term exposures or very dilute solutions. Such conditions are frequently found in chemical waste disposal operations. These require consultation with Master Builders Technologies experts.

Comments on ratings and product use

1. A product rated C-1 (140°F. immersion) can be assumed to rate a higher temperature for spillage.
2. Flakeline 222HT
   To achieve its maximum temperature rating of 150°F., Flakeline 222HT must be applied in three coats on steel, to a thickness of 45 to 75 mils.
3. Any product rated T or N for exposure to a strong, volatile solvent like Ethyl Acetate, Ethyl Ether or Methylene Chloride (one of the most difficult) could be suitable for splash and spill service because the solvents evaporate so quickly.
4. A Light duty lining such as Flakeline 252, rated A-1 (good to 130°F.) in a weak solvent like Hexane, can actually be used at much higher temperature if there is no water present.
5. Flakeline 200 Series rated E-1 (to 100°F.) in aqueous solutions will be satisfactory, in most cases, if the temperature outside the tank reaches 10°F-20°F higher than this during the day.
6. Resin Topcoats. — ΔT — (Delta T) is the difference between the vessel contents and the outside temperature. There is evidence that resin topcoats on Flakeline 100 Series can fail by blistering if the ΔT is higher than 90°F. As a general rule, we rate the top coated Flakeline at 160°F.
7. Sealants are rated only for spillage service. In many cases they can also be used in immersion service.
8. For aggressive conditions in concrete vessels, use an electrically conductive primer so the lining can be spark tested for voids.
9. Flooring is rated for temperature resistance on the basis of the first column: Frequent or Severe Spills. Constant flow over a floor, or puddles in floors, are considered immersion service.
10. Flakeline 100 Series linings are not recommended for concrete surfaces simply because it is impossible to test the thickness with a magnetic gauge. Thickness of other linings is easier to control.

Product Temperature Limits
(Wet Service unless indicated Dry)

Linings	Steel Substrate Immersion, Constant Flow or Condensing Temperatures °F. Approx. °C.		Concrete Substrate Immersion, Constant Flow or Condensing Temperatures °F Approx. °C	
Ceilcrete® Series	160	71	180	83
Corotine® Series Except 505.2	160	71	180	83
Corotine® 505.2	160	71	160	71
Ceilcote Lining Series Except 68	160	71	160	71
Ceilcote Lining 68	140	60	140	60
Flakeline® 100 Series	200	93	—	—
CeilLine 80	160	71	—	—
Heavy-Duty Coatings	**Steel Substrate Immersion or Condensing Vapor °F Approx. °C**		**Steel Substrate (Dry Service) °F Approx. °C**	
Flakeline® 222HT & 282	150	83	350	176
Flakeline® 200 Series (Except 222HT & 282)	130	83	300	148
Flakeline® 300 Series	120	49	220	105
Flakeline® 600 Series and Flaketar™	120	49	220	105
Floor Toppings	**Frequent or Severe Spills °F Approx. °C**		**Occasional Splash, Spill or Rinse °F Approx. °C**	
Ceilcrete®	160	71	300	148
Corotine® Series	170	76	300	148
Ceilcote 681 Floor/Corocrete T	170	76	250	121
Ceilcote 682 Floor	180	83	250	121
Ceilcote 683 Floor/Corocrete SL	140	60	200	93
Ceilcote 685 Floor	180	83	250	148
Corocrete SR	140	60	200	93
Polyesters, Vinyl Esters. Refer to Following charts	**Rating (1) Immersion, Constant Flow Frequent Spillage, Condensing Vapors.**		**Ratings (2 and 3) Dry and Non-Condensing Vapors Occasional Spills, Rinse.**	
211-212	130°F	49°C	180°	83°C
232	130°F	49°C	250°	121°C
242	130°F	49°C	250°	121°C
251-252	130°F	49°C	250°	121°C
300-350	120°F	49°C	180°	83°C
222HT	150°F	66°C	400°	204°C
Epoxies	**Rating (1) Immersion, Constant Flow Frequent Spillage, Condensing Vapors.**		**Ratings (2 and 3) Dry and Non-Condensing Vapors Occasional Spills, Rinse.**	
650HB/FDA	120°F	49°C	250°F	121°C
661	120°F	49°C	225°F	107°C
600	120°F	49°C	225°F	107°C
615/620	Not Recommended		250°F/300°F	121°C/149°C
630	170°F	77°C	300°F	149°C
Urethanes	**Rating (1) Immersion, Constant Flow Frequent Spillage, Condensing Vapors.**		**Ratings (2 and 3) Dry and Non Condensing Vapors Occasional Spills, Rinse.**	
470	Not Recommended		250°F	121°C
480	Not Recommended		250°F	121°C
Expansion Joint Sealants	**Immersion or Condensing Vapors °F Approx. °C**		**Occasional Splash Spill or Rinse °F Approx. °C**	
Ceilcote EJ3 & 4	140	60	200	93
Ceilcote EJ10	120	49	180	83
Ceilcote EJ11	—	—	—	—

Notes on chemicals in Corrosion Chart

NOTE: 1 Lab tested at ambient temperature or at temperature rated. For higher temperatures, Master Builders Technologies should be consulted.

NOTE: 2 Requires carbon filler for Ceilcretes and Corolines, resin topcoats for Flakelines and CeilLine 80, a synthetic veil for the Ceilcote Lining Series.

NOTE: 3 Linings for Potassium or Sodium Chlorate are limited to 160°F. Coroline and Flakeline 100 Series are rated C-1, since there is no letter designation for 160°F. They are actually good for 160°F.

NOTE: 4 A lining for Bright Nickel plating tanks must be approved by the supplier of the bath salts. For wastes, this is not required.

Selecting the right floor system.

To help you determine the best floor system for your process environment, we have rated the performance of each system under a complete range of service conditions.

It may be necessary to combine materials or alter standard specifications to meet your requirements. Such versatility is built into Master Builders Technologies floor materials. Consult Master Builders Technologies concerning your specific application.

	WEAR			THERMAL			NEW/OLD CONCRETE					CHEMICAL SPILLAGE							SPECIALIZED AREAS					CONDITIO		
	Heavy Truck Traffic	Occasional Truck Traffic	Foot Traffic Only	Thermal Shock 110°F to 40°F	Thermal Shock 220°F to 40°F	Thermal Shock 130°F to -20°F	Hairline Cracking	Mild Cracking	Construction Joint Cracking	Cure Stress Relief	Eroded Aggregate Exposed	Powdery Poorly Cured Surface	Mineral Acids Concentrated	Mineral Acids Dilute	Caustics	Aromatic Solvents	Chlorinated Solvents	Aliphatic Solvents	Fats and Oils	Organic Acids	Sanitary	Trenches	Foundations	Coolers and Freezers	Laboratories	Low Temp. C	Damp S	Mi
Ceilcote 681 Floor: Unreinforced Topping, Traffic. Aggregate-filled ⅛" to ¼" topping. High wear resistance, durability, and chemical resistance; convenient floor-patching maintenance material. Meets current USDA requirements.	E	E	E	G	F	G	F	F	N	E	N	F	G	E	F	F	E	G	F	G	N	N	G	F	E	E	E
Ceilcote 682 Floor: Fiberglass Reinforced, Sanitary. 100-mil floor. Epoxy resin modified for maximum cleanability, chemical, and thermal-shock resistance. Meets current USDA requirements.	F	G	E	E	E	E	E	E	E	E	G	F	G	E	G	G	E	E	G	E	N	N	E	E	E	E	F
Ceilcote 683 Floor: Light Duty. Semi-self-leveling 55-mil coating. Epoxy resin modified for maximum cleanability and chemical resistance. Meets current USDA and MID requirements.	F	G	E	G	F	G	G	F	N	G	N	F	G	E	G	G	E	E	G	E	N	N	F	E	E	E	E
Ceilcote 685 Floor: Heavy Duty. Fiberglass-reinforced 3/16" floor. Epoxy resin modified for maximum wearability, chemical, and thermal-shock resistance. Meets current USDA requirements.	E	E	E	E	G	G	G	G	F	E	G	F	G	E	G	G	E	E	G	G	N	E	E	F	E	E	F
Ceilcrete Series: Fiberglass Reinforced, Floor and Immersion. Fiberglass-reinforced 5/32" lining. Polyester resin modified for maximum chemical resistance. Available with: Silica filler — standard applications. Carbon filler — conductive or special corrosive environments. Abrasion-resistant filler — agitated slurries.	G	E	E	E	F	G	G	G	N	E	F	E	E	G	E	E	E	E	E	G	E	E	F	F	F	F	F
Coroline Series (505M 505.2 are USDA Approved) Fiberglass-reinforced 5/32" lining. Epoxy resins modified for maximum chemical resistance. Available with: Silica filler — standard applications. Carbon filler — conductive or special corrosive environments. Abrasion-resistant filler — agitated slurries.	G	E	E	E	G	G	G	F	N	E	F	F	G	E	E	E	E	E	G	G	E	E	F	F	N	F	F
Corocrete F: Underlayment, Restoration (USDA Approved) Aggregate filled ⅜"-6" polymer concrete. Ease of placement, rapid-setting and compatible with most Ceilcote systems.	E	E	E	G	F	G	F	F	N	E	N	N	F	G	N	N	F	F	F	N	N	N	G	N	F	F	E
Corocrete T: Unreinforced Topping, Traffic (USDA Approved) Aggregate filled ¼" topping. High wear resistance, durability and moderate chemical resistance.	E	E	E	G	F	F	F	F	N	E	F	N	G	G	F	N	G	G	F	G	N	N	N	N	F	F	G
Corocrete SL: Medium Duty, Cleanable. Semi-self-leveling 55 mil topping. Modified for maximum cleanability and chemical resistance. Skid resistant or smooth finish available. Meets current USDA and MID requirements.	N	F	E	G	F	G	G	F	N	F	N	F	G	E	G	G	E	E	G	E	N	N	F	E	E	E	E
Corocrete SR: Personnel Safety Floor. Two coat roller applied skid resistant system. Nominal 40-60 mils. Incorporates alumina grit for maximum wear and slip resistance.	G	E	E	G	F	G	G	F	N	G	F	N	F	G	F	F	G	G	F	G	N	E	F	F	N	N	G
Corocrete CS: Concrete Sealer. A low viscosity, one component system for use on virtually all new concrete surfaces where dusting is a problem. Ideal for warehouse applications.	G	E	E	G	F	G	N	N	N	G	E	F	G	G	G	G	G	G	F	G	E	E	G	F	N	N	E

E = Excellent G = Good F = Fair N = Not recommended

Master Builders Technologies

	Ceilkote 80	Corrolite 505/510/505.6/505.2	Corrolite 505M	Corrolite 550	Ceilcote 2500 International	Ceilcrete 2500 U.S.A.	Ceilcrete 5500	Ceilcrete 6400	Ceilcrete 6850	Flakeline 103	Flakeline 181	Flakeline 184	Flakeline 180	Ceilcote Lining 25	Ceilcote Lining 61	Ceilcote Lining 64	Ceilcote Lining 68	Ceilcote Lining 74	Ceilcote Lining 652	Flakeline 211/212	Flakeline 222HT	Flakeline 232
Acetaldehyde 100%	T	T	T	N	N	T	T	T	T	N	N	N	T	N	N	N	N	T	N	N	T	T
Acetic Acid - 10%	A1	T	T	T	C1	A1	A1	A1	A1	C1	B1	C1	A1	C1	A1	C1	N	A1	C1	A1	A1	A1
Acetic Acid - 10-50%	A1	N	N	N	D1	C1	C1	D1	A1	D1	C1	D1	C1	D1	C1	D1	N	A1	D1	A1	C1	A1
Acetic Acid 50% to (Glacial) 100%	D1	N	N	N	T	D1	D1	T	D1	T	D1	T	D1	T	D1	T	N	D1	T	E2	A2	A2
Acetic Anhydride	D1	N	N	N	E1	D1	D1	D1	D1	D1	D1	D1	D1	E1	D1	E1	N	D1	E1	D2	E1	E1
Acetone - 100%	C2	C2	C2	D2	N	C2	C2	N	C2	N	C2	N	C2	N	C2	N	N	C2	N	N	C2	D2
Acetone - 10%	C1	A1	C1	D1	E1	C1	C1	D1	A1	D1	C1	N	C1	E1	C1	N	E2	A1	E1	T	A1	A1
Acetyl Chloride - 100%	T	T	T	N	N	T	T	N	T	N	T	N	T	N	T	N	N	T	N	N	T	T
Acrylic Acid - 100%	D1	N	N	N	E1	D1	D1	D1	D1	D1	D1	D1	D1	E1	D1	D1	N	D1	E1	E2	A2	A2
Acrylonitrile	T	N	N	N	N	N	N	N	T	N	N	N	T	N	N	N	N	T	N	N	T	T
Adipic Acid - 25%	C1	C1	D1	D1	D1	C1	C1	D1	C1	C1	D1	D1	C1	D1	C1	D1	T	C1	D1	D1	C1	D1
Allyl Alcohol[1]	D1	E1	E1	T	D1	D1	D1	D1	D1	D1	D1	D1	D1	D1	D1	D1	T	D1	D1	T	D1	D1
Allyl Chloride	T	T	T	N	N	T	T	N	T	N	N	N	T	N	T	N	N	T	N	N	T	T
Alum (Saturated Solution)	C1	C1	C1	D1	C1	C1	C1	C1	C1	C1	C1	C1	C1	C1	C1	C1	A1	C1	C1	D1	C1	D1
Aluminum Bromide	A1	A1	A1	A1	A1	A1	A1	A1	A1	A1	A1	A1	A1	A1	A1	A1	T	A1	A1	A1	A1	A1
Aluminum Chloride	A1	A1	A1	C1	A1	A1	A1	A1	A1	A1	A1	A1	A1	A1	A1	A1	A1	A1	A1	A1	A1	A1
Aluminum Nitrate (Saturated)	A1	A1	C1	C1	A1	A1	A1	A1	A1	A1	A1	A1	A1	A1	A1	A1	A1	A1	A1	A1	A1	A1
Aluminum Sulfate	C1	C1	C1	C1	C1	C1	C1	C1	C1	C1	C1	C1	C1	C1	C1	C1	A1	C1	C1	A1	A1	A1
Ammonia (Wet Gas)	C1	A1	A1	A1	C1	C1	C1	N	C1	B1	C1	N	C1	C1	C1	N	A1	C1	C1	N	A1	A1
Ammonium Chloride	A1	A1	A1	A1	A1	A1	A1	A1	A1	A1	A1	A1	A1	A1	A1	A1	A1	A1	A1	A1	A1	A1
Ammonium Cocoamphotylate[1] - 30%	C1	C1	C1	C1	C1	C1	C1	C1	C1	C1	C1	C1	C1	C1	C1	C1	T	C1	C1	T	C1	D1
Ammonium Fluoride - 10%[2]	C1	A1	C1	C1	A1	A1	A1	A1	A1	C1	C1	C1	C1	C1	C1	C1	A1	C1	C1	A1	A1	A1
Ammonium Hydroxide - 20%	D1	C1	C1	C1	D1	D1	D1	N	D1	N	N	N	N	D1	D1	N	E1	E1	D1	N	N	E1
Ammonium Lauryl Sulfate[1] - 30%	D1	D1	D1	D1	D1	D1	D1	D1	D1	D1	D1	D1	D1	D1	D1	D1	A1	D1	D1	A1	A1	A1
Ammonium Nitrate	A1	A1	A1	A1	A1	A1	A1	A1	A1	A1	A1	A1	A1	A1	A1	A1	A1	A1	A1	A1	A1	A1
Ammonium Persulfate	A1	D1	D1	D1	A1	A1	A1	A1	A1	A1	A1	A1	A1	A1	A1	A1	A1	A1	A1	A1	A1	A1
Ammonium Sulfate	A1	A1	A1	A1	A1	A1	A1	A1	A1	A1	A1	A1	A1	A1	A1	A1	A1	A1	A1	A1	A1	A1
Ammonium Sulfide	A1	A1	A1	A1	A1	A1	A1	D1	A1	A1	A1	D1	A1	A1	A1	D1	A1	A1	A1	A1	A1	A1
Ammonium Sulfite	A1	A1	A1	A1	A1	A1	A1	A1	A1	A1	A1	A1	A1	A1	A1	A1	A1	A1	A1	A1	A1	A1
Ammonium Xylene Sulfonate[1] - 40%	C1	C1	C1	C1	C1	C1	C1	C1	C1	C1	C1	C1	C1	C1	C1	C1	A1	C1	C1	A1	D1	D1
Amyl Acetate[1]	D1	T	T	T	E1	D1	D1	D1	D1	D1	D1	D1	D1	E1	D1	D1	N	D1	T	N	D1	D1
Amyl Alcohol	N	D1	D1	D1	C1	C1	C1	C1	C1	A1	A1	A1	A1	A1	A1	A1	A1	A1	D1	A1	A1	A1
Aniline	D1	N	N	N	N	T	T	E1	D1	N	T	E1	D1	N	T	E1	N	D1	N	N	D1	D1
Aniline Hydrochloride	A1	C1	C1	D1	C1	C1	C1	N	A1	D1	T	T	A1	C1	T	N	T	A1	C1	T	C1	A1
Anodizing-Chromic			See Chromic Acid - 10%																			
Anodizing-Sulfuric			See Sulfuric Acid - 20-50%																			
Antimony Chloride (tri)	D1	D1	D1	D1	D1	D1	D1	D1	D1	D1	D1	D1	D1	D1	D1	D1	D1	D1	D1	E1	E1	E1
Aqua Regia	N	N	N	N	N	N	N	N	N	N	N	N	N	N	N	N	N	N	N	N	N	N
Arsenous Acid	C1	T	T	T	D1	D1	D1	D1	C1	C1	A1	A1	C1	C1	A1	A1	T	C1	C1	D1	C1	D1
Barium Chloride	A1	C1	C1	C1	A1	A1	A1	A1	A1	A1	A1	A1	A1	A1	A1	A1	A1	A1	A1	A1	A1	A1
Barium Hydroxide	C1	A1	A1	A1	C1	C1	C1	E1	C1	C1	C1	E1	C1	C1	C1	E1	A1	C1	C1	N	C1	D1
Barium Sulfide	C1	A1	A1	C1	C1	C1	C1	E1	C1	C1	C1	E1	C1	C1	C1	E1	A1	C1	C1	E1	C1	D1
Benzal Chloride	T	D1	T	T	T	T	T	T	T	T	T	T	T	T	T	T	T	T	T	T	T	T
Benzaldehyde	E1	T	T	T	N	T	T	N	E1	N	T	N	E1	N	T	N	N	E1	N	N	E1	E1
Benzene (Benzol)	D1	D1	D1	T	N	E1	D1	E1	D1	N	D1	E1	D1	N	E1	E1	N	D1	N	N	D1	D1
Benzene Sulfonic Acid 50-100%	C1	T	T	T	C1	C1	C1	D1	C1	B1	C1	D1	C1	C1	C1	D1	N	C1	C1	A1	C1	A1
Benzene Thiol	N	N	N	N	N	N	N	N	N	N	N	N	N	N	N	N	N	N	N	N	N	N
Benzyl Alcohol[1]	D1	D1	D1	D1	D1	D1	D1	T	D1	D1	D1	T	D1	D1	D1	T	T	D1	T	T	D1	D1
Benzoic Acid (Saturated)	A1	C1	C1	C1	A1	A1	A1	A1	A1	A1	A1	A1	A1	A1	A1	A1	A1	A1	A1	A1	A1	A1
Benzoyl Chloride	T	D1	D1	D1	T	T	T	N	T	T	T	N	T	T	T	N	T	T	T	T	T	T
Benzyl Chloride[1]	D1	D1	T	T	N	T	T	N	D1	N	T	N	D1	N	T	N	N	D1	N	N	D1	D1
Black Liquor (Paper)	C1	A1	A1	C1	C1	C1	C1	C1	C1	C1	C1	N	C1	C1	C1	N	A1	C1	C1	N	C1	D1
Boric Acid (Saturated)	A1	C1	C1	C1	A1	A1	A1	A1	A1	B1	A1	D1	A1	A1	A1	D1	A1	A1	A1	A1	A1	A1
Bromine, Wet Gas	D1	N	N	N	D1	D1	D1	D1	D1	D1	D1	D1	D1	D1	D1	D1	N	D1	D1	T	D1	D1
Bromine, Dry Gas	D3	N	N	N	D3	D3	D3	D3	D3	D3	D3	D3	D3	D3	D3	D3	N	D3	D3	T	D3	D3
Bromine Water - 5%	D1	N	N	N	D1	D1	D1	D1	D1	D1	D1	D1	D1	D1	D1	D1	N	D1	D1	T	D1	D1
Butanol Normal	D1	C1	C1	C1	D1	C1	C1	D1	C1	D1	C1	D1	D1	D1	C1	D1	T	D1	D1	A1	C1	A1
Butyl Acetate	E1	E1	E1	T	E1	E1	E1	E1	E1	E1	E1	E1	E1	E1	E1	E1	T	E1	E2	N	E1	E1

CEILCOTE
Corrosion Control Products

	Flakeline 241/242	Flakeline 251/252	Flakeline 252 International	Flakeline 261/262	Flakeline 282	Flakeline 300	Flakeline 600 & Flakelar 651	Ceilcote 881/885 Corocrete T	Ceilcote 882/883 Corocrete SL/SR	Ceilcrete 895	Ceilcrete 2500 U.S.A.	Ceilcrete 2500 Int.	Ceilcrete 5500	Ceilcrete 6400	Ceilcrete 6650	Corolite 505/510	Ceilcote EJ10	Ceilcote EJ11	Ceilcote EJ14
Acetaldehyde 100%	N	D2	N	N	D2	N	N	N	E2	D2	D2	N	D2	N	D2	D2	N	N	N
Acetic Acid - 10%	A1	A1	A1	A1	A1	A1	N	D2	D2	A2	A2	A2	A2	A2	A2	D2	D2	E2	D2
Acetic Acid - 10-50%	D1	A1	D1	D1	C1	D2	N	N	N	A2	A2	A2	A2	A2	A2	N	D2	T	T
Acetic Acid 50% to (Glacial) 100%	D2	A2	D2	D2	A2	N	N	N	N	A2	C2	D2	A2	D2	A2	N	N	N	N
Acetic Anhydride	E2	D2	D2	D2	E1	E2	N	N	N	A2	D2	D2	D2	D2	D2	N	T	N	T
Acetone - 100%	N	E2	N	N	C2	N	N	N	D2	C2	E2	N	E2	E2	C2	C2	N	N	N
Acetone - 10%	E1	A1	E1	D1	A1	E2	E2	D2	D2	A2	A2	A2	A2	A2	A2	A2	T	T	T
Acetyl Chloride - 100%	N	T	N	T	T	N	N	D1	T	T	T	T	T	T	T	T	N	T	N
Acrylic Acid - 100%	E2	A2	E2	E2	A2	E2	N	N	N	A2	C2	D2	C2	D2	A2	N	N	T	N
Acrylonitrile	N	N	N	N	T	N	N	N	N	T	T	N	T	N	T	N	N	T	N
Adipic Acid - 25%	D1	D1	D1	D1	C1	D2	T	A2	A2	A2	A2	A2	A2	A2	A2	A2	D2	E2	D2
Allyl Alcohol	D1	D1	D1	D1	D1	E1	T	D2	D2	A2	A2	A2	A2	A2	A2	D2	T	E2	T
Allyl Chloride	N	T	N	T	T	N	N	N	T	D2	T	N	T	T	D2	T	T	T	T
Alum (Saturated Solution)	D1	D1	D1	D1	C1	D2	D2	A2	A2	A2	A2	A2	A2	A2	A2	A2	D2	D2	D2
Aluminum Bromide	A1	A1	A1	A1	A1	A1	A1	A2	A2	A2	A2	A2	A2	A2	A2	A2	D2	E2	D2
Aluminum Chloride	A1	A1	A1	A1	A1	A1	E1	A2	A2	A2	A2	A2	A2	A2	A2	A2	D2	D2	D2
Aluminum Nitrate (Saturated)	A1	A1	A1	A1	A1	A1	A1	A2	A2	A2	A2	A2	A2	A2	A2	A2	D2	D2	D2
Aluminum Sulfate	A1	A1	A1	A1	A1	E1	E1	A2	A2	A2	A2	A2	A2	A2	A2	A2	D2	D2	D2
Ammonia (Wet Gas)	A1	A1	A1	N	A1	N	E1	A2	A2	A2	A2	A2	A2	D2	A2	A2	D2	E2	T
Ammonium Chloride	A1	A1	A1	A1	A1	E1	E1	A2	A2	A2	A2	A2	A2	A2	A2	A2	D2	D2	D2
Ammonium Cocoamonyte - 30%[1]	D1	D1	D1	D1	C1	T	T	T	T	A2	A2	A2	A2	A2	A2	A2	D2	D2	D2
Ammonium Fluoride - 10%[2]	A1	A1	A1	A1	A1	D2	D2	E2	D2	A2	A2	A2	A2	A2	A2	A2	D2	E2	D2
Ammonium Hydroxide - 20%	E1	E1	E1	N	E1	N	E1	A2	A2	A2	A2	A2	A2	D2	A2	A2	D2	E2	T
Ammonium Lauryl Sulfate - 30%[1]	A1	A1	A1	A1	A1	A1	D2	A2	A2	A2	A2	A2	A2	A2	A2	A2	D2	D2	D2
Ammonium Nitrate	A1	A1	A1	A1	A1	A1	A2	A2	A2	A2	A2	A2	A2	A2	A2	A2	D2	D2	D2
Ammonium Persulfate	A1	A1	A1	A1	A1	A1	A2	D2	D2	A2	A2	A2	A2	A2	A2	D2	D2	D2	D2
Ammonium Sulfate	A1	A1	A1	A1	A1	A1	A1	A2	A2	A2	A2	A2	A2	A2	A2	A2	D2	D2	D2
Ammonium Sulfide	A1	A1	A1	E1	A1	A2	E1	A2	A2	A2	A2	A2	A2	A2	A2	A2	D2	D2	D2
Ammonium Sulfite	A1	A1	A1	A1	A1	A1	E1	A2	A2	A2	A2	A2	A2	A2	A2	A2	D2	D2	D2
Ammonium Xylene Sulfonate - 40%[1]	D1	D1	D1	D1	D1	D1	T	A2	A2	A2	A2	A2	A2	A2	A2	A2	D2	D2	D2
Amyl Acetate[1]	T	D1	D1	D1	D1	N	T	T	T	D2	D2	D2	D2	D2	D2	D2	N	N	N
Amyl Alcohol	A1	A1	A1	A1	A1	A1	A2	D2	D2	A2	A2	A2	A2	A2	A2	A2	D2	E2	T
Aniline	N	T	N	E1	D1	N	N	N	N	D2	T	N	T	D2	D2	N	N	E2	N
Aniline Hydrochloride	D1	D1	D1	N	C1	T	T	T	T	A2	A2	A2	A2	A2	A2	D2	T	T	T
Anodizing-Chromic			See Chromic Acid - 10%																
Anodizing-Sulfuric			See Sulfuric Acid - 20-50%																
Antimony Chloride (tri)	E1	E1	E1	E1	E1	T	T	E2	E2	D2	D2	D2	D2	D2	D2	E2	D2	C2	D2
Aqua Regia	N	N	N	N	N	N	N	N	N	N	N	N	N	N	N	N	N	N	N
Arsenous Acid	D1	D1	D1	D1	C1	D1	T	T	T	A2	A2	A2	A2	A2	A2	A2	D2	D2	D2
Barium Chloride	A1	A1	A1	A1	A1	A1	A1	A2	A2	A2	A2	A2	A2	A2	A2	A2	D2	D2	D2
Barium Hydroxide	D1	D1	D1	E1	C1	D2	D1	A2	A2	A2	A2	A2	A2	D2	A2	A2	D2	E2	T
Barium Sulfide	D1	D1	D1	E1	C1	D2	D1	A2	A2	A2	A2	A2	A2	D2	A2	A2	D2	E2	D2
Benzal Chloride	T	T	T	T	T	T	N	T	T	T	T	T	T	T	T	D2	N	E2	T
Benzaldehyde	N	T	N	N	E1	N	N	T	T	D2	T	T	T	T	D2	T	T	N	T
Benzene (Benzol)	N	D1	N	D1	D1	D2	N	D2	D2	D2	D2	N	D2	D2	D2	D2	N	T	N
Benzene Sulfonic Acid 50-100%	A1	A1	A1	A1	C1	E1	T	T	T	A2	A2	A2	A2	A2	A2	T	T	T	T
Benzene Thiol	N	N	N	N	N	N	N	N	N	T	T	N	N	N	N	N	N	T	N
Benzyl Alcohol[1]	D1	D1	D1	T	D1	D1	T	T	T	D2	D2	D2	D2	T	D2	D2	T	D2	T
Benzoic Acid (Saturated)	A1	A1	A1	A1	A1	A1	E1	A2	A2	A2	A2	A2	A2	A2	A2	A2	D2	E2	D2
Benzoyl Chloride	T	T	T	N	T	T	T	T	T	T	T	T	T	N	T	D2	T	T	T
Benzyl Chloride[1]	N	T	N	N	D1	N	T	T	T	D2	T	T	T	T	D2	D2	N	T	N
Black Liquor (Paper)	D1	D1	D1	N	C1	N	E1	A2	A2	A2	A2	A2	A2	A2	A2	A2	D2	T	T
Boric Acid (Saturated)	A1	A1	A1	A1	A1	E1	E1	A2	A2	A2	A2	A2	A2	A2	A2	A2	D2	D2	D2
Bromine, Wet Gas	D1	D1	D1	D1	D1	T	N										N	D2	N
Bromine, Dry Gas	D3	D3	D3	D3	D3	T	N										N	D2	N
Bromine Water - 5%	D1	D1	D1	D1	D1	T	N	N	N	A2	A2	A2	A2	A2	A2	N	N	D2	N
Butanol Normal	A1	A1	A1	A1	A1	E1	T	D2	D2	A2	A2	A2	A2	A2	A2	A2	T	D2	T
Butyl Acetate	E2	E1	E1	E1	E1	E2	T	T	T	D2	D2	D2	D2	D2	D2	D2	N	N	N

KEY TO CHEMICAL RESISTANCE CHART

Rating Descriptions
- A Good to Maximum Temperature of Product
- B Good to 180 °F (71 °C) Maximum
- C Good to 140 °F (60 °C)
- D Good to 120 °F (37 °C) Ambient
- E Good to 100 °F (37 °C)

Rating Descriptions
- 1 Immersion or Constant Flow or Condensing Vapor
- 2 Occasional Splash or Spill
- 3 Fumes Only, Not Condensing
- N Not Recommended

Rating Descriptions
- T Varies With Conditions. May Require Test. Consult Master Builders Technologies for Recommendation.

Master Builders Technologies

	Cellline 80	Corrolite 505/510/505.6/505.2	Corrolite 505M	Corrolite 550	Cellcrete 2500 International	Cellcrete 2500 U.S.A.	Cellcrete 5500	Cellcrete 6400	Cellcote 6850	Flakeline 103	Flakeline 161	Flakeline 164	Flakeline 180	Cellcote Lining 25	Cellcote Lining 61	Cellcote Lining 64	Cellcote Lining 68	Cellcote Lining 74	Cellcote Lining 652	Flakeline 211/212	Flakeline 222HT	Flakeline 232
Butyl Acrylate[1]	T	N	N	N	N	T	T	N	T	N	T	N	T	N	T	N	T	T	N	N	E1	E1
Butyl Amine	T	N	N	N	N	N	N	N	T	N	N	N	T	N	N	N	N	T	N	N	T	T
Butyl Carbitol[1]	D1	D1	D1	D1	D1	D1	D1	D1	D1	D1	D1	D1	D1	D1	D1	D1	T	D1	D1	T	D1	D1
Butyl Carbitol Acetate[1]	E1	D1	T	N	N	T	T	E1	E1	N	T	E1	E1	N	T	E1	N	E1	N	N	E1	E1
Butyl Cellosolve[1]	D1	D1	D1	D1	D1	D1	D1	D1	D1	D1	D1	D1	D1	D1	D1	D1	T	D1	D1	T	D1	D1
Butyl Cellosolve Acetate[1]	E1	D1	T	N	T	E1	E1	E1	E1	T	E1	E1	E1	T	E1	E1	N	E1	T	N	E1	E1
Butyl Ether[1]	D1	T	T	T	D1	D1	D1	D1	D1	D1	D1	D1	D1	D1	D1	D1	T	D1	D1	T	C1	D1
Butyl Acid Levulinic[1]	D1	D1	T	T	D1	D1	D1	T	D1	D1	D1	T	D1	D1	D1	T	N	D1	D1	T	D1	D1
Butyric Acid - 100%[1]	D1	N	N	N	D1	D1	D1	D1	D1	D1	D1	D1	D1	D1	D1	D1	N	D1	D1	T	D1	D1
Cadmium Plating - Cyanide	C1	A1	A1	A1	C1	C1	C1	N	C1	C1	C1	N	C1	C1	C1	N	A1	C1	C1	N	A1	A1
Calcium Bisulfite	A1	C1	C1	C1	A1	A1	A1	A1	A1	A1	A1	A1	A1	A1	A1	A1	A1	A1	A1	A1	A1	A1
Calcium Chloride	A1	A1	A1	A1	A1	A1	A1	A1	A1	A1	A1	A1	A1	A1	A1	A1	A1	A1	A1	A1	A1	A1
Calcium Hydroxide[2]	C1	A1	A1	A1	C1	C1	C1	D2	C1	C1	C1	D2	C1	C1	C1	D2	A1	C1	C1	D2	C1	A1
Calcium Hypochlorite - 5%[2]	D1	N	N	N	D1	D1	D1	D1	D1	D1	D1	D1	D1	E1	C1	C1	N	A1	A1	N	D1	D1
Calcium Nitrate	A1	A1	A1	A1	A1	A1	A1	A1	A1	A1	A1	A1	A1	A1	A1	A1	A1	A1	A1	A1	A1	A1
Caprylic Acid (Octanoic Acid)[1]	A1	N	N	N	C1	C1	C1	C1	A1	C1	C1	C1	A1	C1	C1	C1	N	A1	C1	E1	C1	D1
Carbolic Acid (Phenol) - 88%	E1	N	N	N	N	N	N	N	E1	N	N	N	E1	N	N	N	N	E1	N	N	E1	E1
Carbon Bisulfide (Di) Fumes (Wet)	C1	D1	D1	D1	D1	E1	E1	N	C1	D1	E1	N	C1	D1	E1	N	T	C1	N	N	C1	A1
Carbon Tetrachloride	C1	C1	C1	D1	E1	C1	C1	C1	A1	E1	C1	C1	C1	E1	C1	C1	A1	A1	E2	T	A1	D1
Castor Oil	C1	D1	D1	D1	A1	A1	A1	A1	A1	C1	C1	C1	C1	A1	A1	A1	E1	A1	A1	D1	A1	D1
Cellosolve[1]	D1	D1	D1	D1	D1	D1	D1	D1	D1	D1	D1	D1	D1	D1	D1	D1	T	D1	D1	D1	C1	D1
Cellosolve Acetate[1]	D1	D1	T	T	N	E1	E1	E1	D1	N	E1	E1	D1	N	E1	E1	T	D1	N	N	D1	D1
Chloroacetic Acid - 1-20%[1]	B1	N	N	N	C1	A1	A1	D1	A1	C1	B1	D1	B1	C1	A1	D1	N	A1	C1	D1	D1	D1
Chloroacetic Acid - 20-50%[1]	D1	N	N	N	E1	D1	D1	E1	D1	E1	D1	D1	D1	E1	D1	D1	N	D1	E1	T	D1	D1
Chloroacetic Acid - 50-100%[1]	N	N	N	N	N	N	N	N	N	N	N	N	N	N	N	N	N	N	N	N	E2	E2
Chlorine Dioxide Solution	C1	N	N	N	A1	A1	A1	D1	C1	A1	A1	D1	C1	A1	A1	D1	N	C1	C1	T	A1	A1
Chlorine Gas - Dry	A3	N	N	N	A3	A3	A3	A3	A3	B3	B3	B3	B3	A3	A3	A3	N	A3	A3	D3	A3	A3
Chlorine Gas - Wet	A3	N	N	N	A3	A3	A3	A3	A3	B3	B3	B3	B3	A3	A3	A3	N	A3	A3	N	A3	A3
Chlorine Water - Saturated	A1	N	N	N	A1	A1	A1	A1	A1	B1	B1	B1	B1	A1	A1	A1	N	A1	A1	E1	A1	A1
Chlorobenzene (Mono)[1]	D1	D1	D1	T	N	E1	E1	N	D1	N	E1	N	D1	N	E1	N	N	D1	N	T	D1	D1
Chlorobutane[1]	D1	D1	D1	D1	D1	D1	D1	D1	D1	D1	D1	D1	D1	D1	D1	D1	T	D1	D1	T	D1	D1
Chloroform	N	N	N	N	N	N	N	N	N	N	N	N	N	N	N	N	N	N	N	N	E2	E2
Chloroprenol	N	N	N	N	N	N	N	N	N	N	N	N	N	N	N	N	N	N	N	N	N	N
Chlorosulfonic Acid	N	N	N	N	N	N	N	N	N	N	N	N	N	N	N	N	N	N	N	N	N	N
Chlorotoluene[1]	D1	D1	E1	T	N	E1	E1	N	D1	N	E1	N	D1	N	E1	N	N	D1	N	N	D1	D1
Chromic Acid - 10%	A1	N	N	N	N	N	N	A1	A1	N	N	B1	E1	N	N	A1	N	E1	N	N	E1	E1
Chrome Plating 20-48 oz/gal[2]	N	N	N	N	N	N	N	N	N	N	N	N	N	N	N	C1	N	T	N	D2	D2	D2
Chromic Chloride	A1	C1	C1	C1	A1	A1	A1	A1	A1	A1	A1	A1	A1	A1	A1	A1	A1	A1	A1	A1	A1	A1
Citric Acid	A1	A1	A1	A1	A1	A1	A1	A1	A1	A1	A1	A1	A1	A1	A1	A1	A1	A1	A1	A1	A1	A1
Copper Plating - Cyanide	D1	A1	A1	A1	D1	D1	D1	D1	D1	D1	D1	D1	D1	C1	C1	N	A1	C1	C1	N	D1	D1
Copper Plating - Acid	A1	D1	D1	D1	A1	A1	A1	A1	A1	A1	A1	A1	A1	A1	A1	A1	A1	A1	A1	A1	A1	A1
Corn Oil	A1	D1	D1	D1	A1	A1	A1	A1	A1	A1	A1	A1	A1	A1	A1	A1	A1	A1	A1	A1	A1	A1
Cottonseed Oil	A1	D1	D1	D1	A1	A1	A1	A1	A1	A1	A1	A1	A1	A1	A1	A1	A1	A1	A1	A1	A1	A1
Cresol (Cresylic Acid)[1]	T	N	N	N	N	T	T	N	T	N	T	N	T	N	T	N	N	T	N	N	T	T
Cresylic Acid[1]	T	N	N	N	N	T	T	N	T	N	T	N	T	N	T	N	N	T	N	N	T	T
Cumene[1]	D1	D1	D1	D1	D1	D1	D1	D1	D1	D1	D1	D1	D1	D1	D1	D1	N	D1	D1	D1	D1	D1
Cyclohexane[1]	C1	C1	C1	C1	D1	A1	A1	C1	A1	D1	B1	C1	C1	D1	A1	C1	T	C1	D1	D1	C1	D1
Cyclohexanone[1]	D1	D1	D1	T	E1	D1	D1	T	D1	E1	D1	T	D1	E1	D1	T	N	D1	E1	T	D1	D1
Cymene[1]	D1	D1	D1	D1	D1	D1	D1	D1	D1	D1	D1	D1	D1	D1	D1	D1	A1	D1	D1	T	D1	D1
Dextrose	A1	A1	A1	A1	A1	A1	A1	A1	A1	A1	A1	A1	A1	A1	A1	A1	A1	A1	A1	A1	A1	A1
Dibromopropane Phosphate[1]	E1	E1	E1	E1	E1	E1	E1	E1	E1	E1	E1	E1	E1	E1	E1	E1	T	E1	E1	E1	E1	E1
Dibutyl Phthalate	C1	A1	A1	A1	C1	C1	C1	C1	C1	C1	C1	C1	C1	C1	C1	C1	T	C1	C1	D1	A1	D1
Dichloro Acetic Acid - 20%[1]	D1	N	N	N	D1	D1	D1	D1	D1	D1	D1	D1	D1	D1	D1	D1	N	D1	D1	D1	D1	D1
Diethanolamine[1]	D1	N	N	N	D1	D1	D1	D1	D1	D1	D1	D1	D1	D1	D1	D1	T	D1	D1	D1	D1	D1
Diethylene Chloroformate[1]	T	T	T	T	N	T	T	N	T	N	T	N	T	N	T	N	N	T	N	N	E2	E2
Diethylketone - 100%[1]	E1	T	T	T	N	T	T	T	E1	N	T	T	E1	N	T	T	N	E1	N	N	E1	E1
Dimethylaminopropylamine	T	N	N	N	N	N	N	N	T	N	N	N	T	N	N	N	N	T	N	N	T	T
Dimethyl Aniline	D1	T	T	T	D1	D1	D1	D1	D1	D1	D1	D1	D1	D1	D1	D1	T	D1	D1	D1	D1	D1

[1] Lining Series

CEILCOTE Corrosion Control Products

	Flakeline 241/242	Flakeline 251/252	Flakeline 252 International	Flakeline 261/262	Flakeline 282	Flakeline 300	Flakeline 600/Flakeline 651	Ceilcote 681/685/Concrete T	Ceilcote 682/683/Concrete SL/SR	Ceilcote 695	Ceilcote 2500 U.S.A.	Ceilcote 2500 International	Ceilcote 5500	Ceilcote 6400	Ceilcote 6650	Corotine 505/510	Ceilcote EJ10	Ceilcote EJ11	Ceilcote EJ3/4
	Joint Linings							Floor Toppings									Sealants		
Butyl Acrylate[1]	N	T	N	T	E1	N	N	N	T	D2	T	N	T	N	D2	N	N	D2	N
Butyl Amine	N	N	N	N	T	N	N	N	N	T	N	N	T	N	T	N	N	T	N
Butyl Carbitol[1]	D1	D1	D1	D1	D1	T	T	D2	D2	C2	C2	C2	C2	C2	C2	A2	N	D2	T
Butyl Carbitol Acetate[1]	N	E1	N	E1	E1	N	N	T	T	C2	D2	N	D2	D2	C2	C2	N	T	N
Butyl Cellosolve[1]	D1	D1	D1	D1	D1	T	T	T	D2	C2	D2	D2	D2	D2	D2	D2	N	E2	N
Butyl Cellosolve Acetate[1]	T	E1	T	E1	E1	N	N	N	E2	D2	D2	T	D2	D2	C2	C2	N	T	T
Butyl Ether[1]	D1	D1	D1	D1	C1	T	N	T	D2	C2	D2	D2	D2	D2	D2	D2	N	T	T
Butyl Acid Levulinic[1]	D1	D1	D1	T	D1	T	N	T	T	D2	D2	D2	D2	T	D2	D2	T	T	T
Butyric Acid - 100%[1]	D1	D1	D1	D1	D1	T	N	N	N	D2	D2	D2	D2	D2	D2	T	T	T	T
Cadmium Plating - Cyanide	A1	A1	A1	N	A1	N	A1	A2	A2	A2	A2	A2	A2	N	A2	A2	D2	E2	D2
Calcium Bisulfite	A1	A1	A1	A1	A1	A1	A1	A2	A2	A2	A2	A2	A2	A2	A2	A2	A2	D2	A2
Calcium Chloride	A1	A1	A1	A1	A1	A1	A1	A2	A2	A2	A2	A2	A2	A2	A2	A2	A2	D2	A2
Calcium Hydroxide[4]	A1	A1	A1	A2	A1	A2	A1	A2	A2	A2	A2	A2	A2	A2	A2	A2	A2	D2	A2
Calcium Hypochlorite - 5%[2]	D1	D1	D1	D1	D1	N	N	T	T	D2	D2	D2	D2	D2	D2	T	T	D2	T
Calcium Nitrate	A1	A1	A1	A1	A1	A1	A1	A2	A2	A2	A2	A2	A2	A2	A2	A2	A2	D2	A2
Caprylic Acid (Octanoic Acid)[1]	D1	D1	D1	D1	D1	D1	N	N	T	C2	C2	C2	C2	C2	C2	N	T	T	T
Carbolic Acid (Phenol) - 88%	N	N	N	N	E1	N	N	N	N	D2	N	N	N	N	D2	N	N	E2	N
Carbon Bisulfide (Di) Fumes (Wet)	N	E1	D1	N	C1	N	N	N	N	D2	D2	N	D2	N	C2	D2	N	D2	N
Carbon Tetrachloride	D1	D1	D1	D1	A1	A2	A2	D2	D2	C2	C2	D2	C2	D2	C2	A2	N	E2	N
Castor Oil	D1	D1	D1	D1	A1	T	T	T	A2	A2	A2	A2	A2	A2	A2	A2	D2	D2	T
Cellosolve[1]	D1	D1	D1	D1	A1	T	T	D2	D2	C2	C2	D2	C2	D2	C2	C2	N	E2	T
Cellosolve Acetate[1]	N	E1	N	E1	D1	N	N	N	T	D2	D2	T	D2	D2	D2	C2	N	N	N
Chloroacetic Acid - 1-20%[1]	D1	D1	D1	D1	D1	E1	N	N	T	A2	A2	C2	A2	C2	A2	T	T	T	T
Chloroacetic Acid - 20-50%[1]	E1	D1	E1	D1	D1	N	N	N	N	C2	C2	D2	C2	D2	C2	N	N	T	N
Chloroacetic Acid - 50-100%[1]	N	E2	N	N	E2	N	N	N	N	E2	E2	T	E2	T	E2	N	N	T	N
Chlorine Dioxide Solution	A1	A1	A1	A1	A1	N	N	N	N	A2	A2	A2	A2	A2	A2	N	T	E2	N
Chlorine Gas - Dry	A3	A3	A3	A3	A3	E3	N										T	E2	N
Chlorine Gas - Wet	A3	A3	A3	A3	A3	E3	N										T	E2	N
Chlorine Water - Saturated	A1	A1	A1	A1	A1	E2	N	N	T	A2	A2	A2	A2	A2	A2	N	T	E2	N
Chlorobenzene (Mono)[1]	N	D1	N	N	D1	T	N	N	T	D2	D2	N	D2	N	D2	D2	N	E2	N
Chlorobutane[1]	D1	D1	D1	D1	D1	T	T	T	T	D2	D2	D2	D2	D2	D2	D2	T	T	T
Chloroform	N	E2	N	N	E2	N	N	N	T	E2	T	N	T	N	E2	T	N	E2	N
Chlorophenol	N	N	N	N	N	N	N	T	T	E2	T	T	T	T	T	E2	N	T	N
Chlorosulfonic Acid	N	N	N	N	N	N	N	N	N	N	N	N	N	N	N	N	N	E2	N
Chlorotoluene[1]	N	D1	N	N	D1	N	N	N	T	D2	D2	N	D2	N	D2	D2	N	T	N
Chromic Acid - 10%	N	N	N	A1	E1	N	E2	D2	D2	A2	A2	A2	A2	A2	A2	C2	D2	T	N
Chrome Plating 20 - 48 oz/gal[4]	N	N	N	D2	D2	N	N	N	N	D2	D2	D2	D2	C2	D2	N	N	T	N
Chromic Chloride	A1	A1	A1	A1	A1	A1	A1	D2	A2	A2	A2	A2	A2	A2	A2	A2	A2	T	D2
Citric Acid	A1	A1	A1	A1	A1	A1	A1	A2	A2	A2	A2	A2	A2	A2	A2	A2	C2	E2	C2
Copper Plating - Cyanide	D1	D1	D1	N	D1	N	D1	A2	A2	C2	C2	C2	C2	C2	C2	A2	D2	E2	D2
Copper Plating - Acid	A1	A1	A1	A1	A1	A1	A2	D2	D2	A2	A2	A2	A2	A2	A2	C2	C2	T	N
Corn Oil	A1	A1	A1	A1	A1	A1	T	C2	A2	A2	A2	A2	A2	A2	A2	A2	T	D2	D2
Cottonseed Oil	A1	A1	A1	A1	A1	A1	T	C2	A2	A2	A2	A2	A2	A2	A2	A2	T	D2	D2
Cresol (Cresylic Acid)[1]	N	T	N	N	N	N	N	N	N	T	T	N	T	N	T	N	N	E2	N
Cresylic Acid[1]	N	T	N	N	N	N	N	N	N	T	T	N	T	N	T	N	N	E2	N
Cumene[1]	D1	D1	D1	D1	D1	D2	N	T	T	D2	D2	D2	D2	D2	D2	D2	N	T	T
Cyclohexane[1]	D1	D1	D1	D1	D1	D1	T	C2	C2	C2	C2	C2	C2	C2	C2	C2	N	E2	D2
Cyclohexanone[1]	E1	D1	E1	T	D1	T	N	T	E2	D2	D2	E2	D2	D2	D2	A2	N	N	N
Cymene[1]	D1	D1	D1	D1	D1	T	T	T	D2	D2	D2	D2	D2	D2	D2	D2	N	T	T
Dextrose	A1	A1	A1	A1	A1	A1	A1	A2	A2	A2	A2	A2	A2	A2	A2	A2	A2	D2	A2
Dibromopropane Phosphate[1]	E1	E1	E1	E1	E1	E1	T	D2	D2	D2	D2	D2	D2	D2	D2	D2	T	T	T
Dibutyl Phthalate	D1	D1	D1	D1	A1	D1	T	D2	D2	A2	A2	A2	A2	A2	A2	A2	T	E2	T
Dichloro Acetic Acid - 20%[1]	D1	D1	D1	D1	D1	D2	N	N	N	D2	D2	D2	D2	D2	D2	T	T	T	T
Diethanolamine[1]	D1	D1	D1	D1	D1	D1	T	N	N	D2	D2	D2	D2	D2	D2	T	T	T	T
Diethylene Chloroformate[1]	N	E2	N	N	E2	N	N	N	D2	D2	D2	D2	D2	D2	D2	D2	T	T	T
Diethylketone - 100%[1]	N	T	N	T	T	N	N	T	T	D2	D2	N	D2	N	D2	D2	N	N	N
Dimethylaminopropylamine	N	N	N	T	T	N	N	N	N	T	T	N	T	N	T	N	N	T	N
Dimethyl Aniline	D1	D1	D1	D1	D1	D1	N	N	T	D2	D2	D2	D2	D2	D2	T	N	T	T

KEY TO CHEMICAL RESISTANCE CHART

Rating Description
- A Good to Maximum Temperature of Product
- B Good to 180 °F (71 °C) Maximum
- C Good to 140 °F (60 °C)
- D Good to 120 °F (37 °C) Ambient
- E Good to 100 °F (37 °C)

Rating Description
- 1 Immersion or Constant Flow or Condensing Vapor
- 2 Occasional Splash or Spill
- 3 Fumes Only, Not Condensing
- N Not Recommended

Rating Description
- Varies With Conditions May Require Test. Consult Master Builders Technologies for Recommendation

Vessar Builders Technologies

	HEAVY DUTY LININGS																						LIGHT
	Cellkote 60	Corrolite 505/510/505.2/505.6	Corrolite 505M	Corrolite 550	Cellcrete 2500 International	Cellcrete 2500 U.S.A.	Cellcrete 5500	Cellcrete 6400	Cellcrete 6850	Flakeline 103	Flakeline 161	Flakeline 164	Flakeline 180	Cellcote Lining 25	Cellcote Lining 61	Cellcote Lining 64	Cellcote Lining 68	Cellcote Lining 74	Cellcote Lining 652	Flakeline 211/212	Flakeline 222HT	Flakeline 232
Dimethyl Carbamoyl Chloride[1]	E1	E1	E1	T	E1	E1	E1	T	E1	E1	E1	T	E1	E1	E1	T	T	E1	E1	T	E1	E1
Dimethyl Carbonyl Chloride[1]	T	E1	E1	T	T	T	T	T	T	T	T	T	T	T	T	T	T	T	T	T	T	T
Dimethyl Formamide[1]	N	N	N	N	N	N	N	N	N	N	N	N	N	N	N	N	N	T	N	N	T	T
Dimethyl Sulfoxide[1]	T	T	T	N	E1	E1	E1	T	T	E1	E1	T	T	E1	E1	T	T	T	T	N	T	T
Dinitro Benzene[1]	T	E1	T	T	E1	T	T	E1	T	E1	T	E1	T	E1	T	E1	T	T	T	T	T	T
Dinitro Toluene[1]	T	E1	T	T	E1	T	T	E1	T	E1	T	E1	T	E1	T	E1	T	T	T	T	T	T
Dodecyl Alcohol (Lauryl)[1]	A1	D1	D1	T	C1	C1	C1	D1	A1	C1	C1	D1	A1	C1	C1	D1	E2	A1	C1	T	A1	D1
Ethoxy Ethanol[1]	E1	E1	T	E2	T	E1	E1	T	E1	T	E1	T	E1	T	E1	T	N	E1	T	T	E1	E1
Ethoxylated Nonyl Phenol[1]	T	C1	T	T	T	T	T	D1	T	T	T	D1	T	T	T	D1	T	T	T	T	E2	E2
Ethyl Acetate	E1	T	N	N	N	T	T	N	E1	N	T	N	E1	N	T	N	N	E1	N	N	E1	E1
Ethyl Acrylate	T	E1	N	N	N	T	T	N	T	N	T	N	T	N	T	N	N	T	N	N	T	T
Ethyl Alcohol	C1	C1	T	T	C1	C1	C1	D1	C1	C1	C1	D1	C1	C1	C1	D1	D2	C1	C1	E1	C1	D1
Ethylamine	T	N	N	N	T	T	T	T	T	T	T	T	T	T	T	T	T	T	T	T	T	T
Ethyl Bromide	N	T	T	N	N	T	T	N	N	N	T	N	N	N	T	N	N	N	N	N	N	N
Ethyl Chloride	E1	T	T	N	T	D1	D1	E1	E1	T	D1	E1	E1	T	D1	E1	N	E1	T	T	E1	E1
Ethyl Chloroformate	T	T	T	N	N	T	T	N	T	N	T	N	T	N	T	N	T	T	N	N	T	T
Ethyl Ether	T	T	T	T	N	T	T	N	T	N	T	N	T	N	T	N	T	T	N	T	E2	E2
Ethyl Hexyl Acrylate	T	E2	T	T	T	T	T	T	T	T	T	T	T	T	T	T	N	T	T	T	T	T
Ethylene Dichloride	E1	E1	N	N	N	T	T	N	E1	N	T	N	E1	N	T	N	N	E1	N	T	E1	E1
Ethylene Glycol	A1	A1	A1	A1	A1	A1	A1	A1	A1	A1	A1	A1	A1	A1	A1	A1	A1	A1	A1	A1	A1	A1
Ethylene Oxide (Dilute)	T	N	N	N	N	E1	E1	N	T	N	E1	N	T	N	E1	N	N	T	N	N	T	T
Ethyl Sulfate[1]	E1	E1	T	T	T	T	T	E1	E1	T	T	E1	E1	T	T	E1	N	E1	E1	T	E1	E1
Ferric Chloride	A1	A1	A1	A1	A1	A1	A1	A1	A1	A1	A1	A1	A1	A1	A1	A1	A1	A1	A1	A1	A1	A1
Ferric Sulfate	A1	A1	A1	A1	A1	A1	A1	A1	A1	A1	A1	A1	A1	A1	A1	A1	A1	A1	A1	A1	A1	A1
Fluosilicic Acid* - 25%	N	T	T	T	C1	C1	C1	C1	C1	N	N	N	N	E1	E1	E1	T	E1	E1	N	N	N
Formaldehyde	C1	D1	D1	D1	D1	C1	C1	C1	C1	D1	C1	C1	C1	D1	C1	C1	A2	C1	C1	A1	A1	A1
Formic Acid	D1	N	N	N	D1	D1	D1	D1	D1	D1	D1	D1	D1	D1	D1	D1	N	D1	T	T	D1	D1
Furfural to 10%	E1	T	T	T	E1	E1	E1	T	E1	E1	E1	T	E1	E1	E1	T	T	E1	E1	T	E1	E1
Furfuryl Alcohol	E1	D1	D1	T	T	E1	E1	E1	E1	T	E1	E1	E1	T	E1	E1	T	E1	T	T	E1	E1
Gasoline																						
Aviation	A1	A1	A1	A1	A1	A1	A1	A1	A1	A1	A1	A1	A1	A1	A1	A1	A1	A1	A1	A1	A1	A1
Diesel	A1	A1	A1	A1	A1	A1	A1	A1	A1	A1	A1	A1	A1	A1	A1	A1	A1	A1	A1	A1	A1	A1
Jet Fuel	A1	A1	A1	A1	A1	A1	A1	A1	A1	A1	A1	A1	A1	A1	A1	A1	A1	A1	A1	A1	A1	A1
Premium Unleaded	A1	A1	A1	A1	A1	A1	A1	A1	A1	A1	A1	A1	A1	A1	A1	A1	A1	A1	A1	A1	A1	A1
Unleaded	A1	A1	A1	A1	A1	A1	A1	A1	A1	A1	A1	A1	A1	A1	A1	A1	A1	A1	A1	A1	A1	A1
Glucose	A1	A1	A1	A1	A1	A1	A1	A1	A1	A1	A1	A1	A1	A1	A1	A1	A1	A1	A1	A1	A1	A1
Glycerine	A1	A1	A1	A1	A1	A1	A1	A1	A1	A1	A1	A1	A1	A1	A1	A1	A1	A1	A1	A1	A1	A1
Glycolic Acid to 70%	D1	T	N	N	D1	D1	D1	D1	D1	D1	D1	D1	D1	D1	D1	D1	T	D1	D1	D1	D1	D1
Gold Plating (Cyanide)	D1	A1	A1	A1	D1	D1	D1	N	D1	D1	D1	N	D1	D1	D1	N	A1	D1	D1	N	D1	D1
Grape Juice	A1	A1	A1	A1	A1	A1	A1	A1	A1	A1	A1	A1	A1	A1	A1	A1	A1	A1	A1	A1	A1	A1
Green Liquor (Paper Ind)	C1	A1	A1	A1	C1	C1	C1	N	C1	C1	N	C1	C1	C1	C1	N	A1	C1	C1	N	C1	A1
Heptane	A1	A1	A1	A1	C1	A1	A1	A1	A1	C1	A1	A1	A1	C1	A1	A1	A1	A1	C1	A1	A1	A1
Hexane	A1	A1	A1	A1	D1	A1	A1	D1	A1	D1	A1	D1	A1	D1	A1	C1	A1	A1	C1	D1	A1	A1
Hydrazine - 35%	N	E1	T	T	T	T	T	N	N	T	T	N	N	T	T	N	T	N	N	N	N	N
Hydrazine Hydrate	T	E1	T	T	T	T	T	N	T	T	T	N	T	T	T	N	T	T	T	T	T	T
Hydriodic Acid - 20%	C1	T	T	T	C1	C1	C1	T	C1	C1	C1	T	C1	C1	C1	T	T	C1	C1	D2	C1	D1
Hydrobromic Acid - 20%	A1	T	T	T	A1	A1	A1	A1	A1	A1	A1	A1	A1	A1	A1	A1	N	A1	A1	A1	A1	A1
Hydrobromic Acid - 48%	C1	N	N	N	C1	C1	C1	A1	C1	C1	C1	A1	C1	C1	C1	A1	N	C1	C1	A1	C1	A1
Hydrochloric Acid - 10%	A1	E1	D2	D2	A1	A1	A1	A1	A1	A1	A1	A1	A1	A1	A1	A1	E2	A1	A1	A1	A1	A1
Hydrochloric Acid - 20%	A1	D2	D2	D2	A1	A1	A1	A1	A1	B1	B1	B1	B1	A1	A1	A1	D2	A1	A1	A2	A1	A2
Hydrochloric Acid - 37%	D2	N	N	N	D2	D2	D2	D2	D2	D2	D2	D2	D2	D2	D2	D2	N	D1	D1	E2	E2	E2
Hydrofluoric Acid - 1-10%[2]	D2	E1	E1	E1	D1	D1	D1	D1	D1	D2	D2	D2	D2	D1	D1	D1	E2	D1	D1	D2	D2	D2
Hydrofluoric Acid - 20%[2]	E2	E2	E2	E2	D1	D1	D1	D1	D1	E2	E2	E2	E2	D2	D2	D2	N	D2	D2	D2	D2	D2
Hydrofluoric Acid - 21 - 48%[2]	N	N	N	N	E1	E1	E1	E1	E1	N	N	N	N	E1	E1	E1	N	E1	E1	N	N	N
Hydrofluosilicic Acid 10%[2]	E1	C1	C1	C1	A1	A1	A1	A1	A1	E1	E1	E1	E1	A1	A1	A1	E2	A1	A1	E1	E1	E1
Hydrofluosilicic Acid - 35%[2]	D2	D2	D2	D2	D1	D1	D1	D1	D1	D2	D2	D2	D2	D1	D1	D1	T	D1	D1	D2	D2	D2
Hydrogen Peroxide - 30%	C1	T	T	T	C1	C1	C1	C1	C1	C1	C1	C1	C1	C1	C1	C1	E2	C1	C1	T	C1	D1
Hydrogen Sulfide Gas	A1	A1	C1	C1	A1	A1	A1	A1	A1	A1	A1	A1	A1	A1	A1	A1	A1	A1	A1	A1	A1	A1
Hypo (Photographic Solution)	A1	A1	A1	A1	A1	A1	A1	A1	A1	A1	A1	A1	A1	A1	A1	D1	A1	A1	A1	A1	A1	A1
Hypochlorous Acid	N	N	N	N	N	N	N	N	N	N	N	N	N	N	N	N	N	T	T	N	N	N
Iodine, Crystals & Vapor	C1	T	T	T	C1	C1	C1	C1	C1	C1	C1	C1	C1	C1	C1	C1	T	C1	C1	D1	C1	D1
Isooctylthioglycolate[1]	D1	T	T	T	D1	D1	D1	D1	D1	D1	D1	D1	D1	D1	D1	D1	T	D1	D1	T	D1	D1

CEILCOTE Corrosion Control Products

	Flakeline 241/242	Flakeline 251/252	Flakeline 252 International	Flakeline 281/282	Flakeline 282	Flakeline 300	Flakeline 600 & Flakeline 601	Ceilcote 681/683/Corocrete T	Ceilcote 682/683/Corocrete SL/SG	Ceilcrete 695	Ceilcrete 2500 U.S.A.	Ceilcrete 2500 International	Ceilcrete 5500	Ceilcrete 6400	Ceilcrete 6650	Corolite Series	Ceilcote EJ10	Ceilcote EJ11	Ceilcote EJ13/EJ4
Dimethyl Carbamoyl Chloride[1]	E1	E1	E1	E1	E1	T	N	T	D2	C2	C2	C2	C2	D2	C2	D2	T	T	T
Dimethyl Carbonyl Chloride[1]	T	T	T	T	T	N	N	T	T	D2	D2	D2	D2	D2	D2	D2	T	T	T
Dimethyl Formamide[1]	N	T	N	T	T	N	N	N	T	T	T	N	T	T	T	T	N	T	N
Dimethyl Sulfoxide[1]	D2	E1	E1	T	T	N	N	N	T	T	D2	D2	D2	T	T	T	N	T	N
Dinitro Benzene[1]	T	T	E1	E1	T	T	N	T	T	D2	D2	D2	D2	D2	D2	D2	T	T	T
Dinitro Toluene[1]	T	T	E1	E1	T	T	N	T	T	D2	D2	D2	D2	D2	D2	D2	T	T	T
Dodecyl Alcohol (Lauryl)[1]	D1	D1	D1	D1	A1	D2	T	D2	D2	A2	A2	A2	A2	A2	A2	A2	D2	D2	D2
Ethoxy Ethanol[1]	T	E1	T	T	E1	T	T	E2	E2	D2	D2	D2	D2	D2	D2	D2	T	T	T
Ethoxylated Nonyl Phenol[1]	T	T	T	E1	T	T	T	T	T	D2	D2	D2	D2	D2	D2	C2	T	T	T
Ethyl Acetate	N	E2	N	N	E1	N	N	T	E2	D2	D2	T	D2	N	D2	D2	N	N	N
Ethyl Acrylate	N	T	N	N	E2	N	N	N	T	D2	T	N	T	N	D2	D2	N	N	N
Ethyl Alcohol	D1	D1	D1	D1	C1	E1	E2	D2	C2	C2	C2	C2	C2	D2	C2	C2	E2	D2	E2
Ethylamine	T	T	T	T	T	N	N	N	N	T	T	T	T	T	T	N	N	T	N
Ethyl Bromide	N	N	N	N	N	N	N	N	T	T	T	T	T	T	T	T	N	T	N
Ethyl Chloride	T	D1	T	D1	T	E2	N	T	T	D2	D2	T	D2	D2	D2	T	N	T	N
Ethyl Chloroformate	N	T	N	N	T	N	N	N	D2	D2	D2	D2	D2	D2	D2	D2	T	T	T
Ethyl Ether	E2	D2	E2	E2	D2	N	N	N	D2	D2	D2	D2	D2	D2	D2	D2	N	T	T
Ethyl Hexyl Acrylate	T	T	T	T	T	T	T	T	T	T	T	T	T	T	T	D2	N	T	T
Ethylene Dichloride	N	T	N	N	E1	N	N	N	N	D2	D2	N	D2	N	D2	D2	N	T	N
Ethylene Glycol	A1	A1	A1	A1	A1	A1	A1	A2	A2	A2	A2	A2	A2	A2	A2	A2	A2	D2	A2
Ethylene Oxide (Dilute)	N	E1	N	N	T	N	N	N	D2	D2	D2	D2	D2	D2	D2	D2	T	T	T
Ethyl Sulfate[1]	E1	T	T	E1	E1	T	T	T	D2	D2	T	T	T	D2	D2	D2	T	T	T
Ferric Chloride	A1	A1	A1	A1	A1	A1	A1	A2	A2	A2	A2	A2	A2	A2	A2	A2	A2	D2	A2
Ferric Sulfate	A1	A1	A1	A1	A1	A1	A1	A2	A2	A2	A2	A2	A2	A2	A2	A2	A2	D2	A2
Fluosilicic Acid* - 25%	N	N	N	N	N	N	N	D2	D2	C2	C2	C2	C2	C2	C2	T	C2	C2	E2
Formaldehyde	A1	A1	A1	A1	A1	A1	D2	A2	A2	A2	A2	A2	A2	A2	A2	A2	A2	D2	A2
Formic Acid	T	D1	D1	D1	D1	T	N	N	N	D2	D2	D2	D2	D2	D2	N	N	E2	N
Furfural to 10%	E1	E1	E1	T	E1	T	T	T	T	E2	E2	E2	E2	E2	E2	T	T	E2	T
Furfuryl Alcohol	T	E1	T	E1	E1	T	N	D2	D2	D2	D2	T	D2	D2	D2	D2	T	D2	T
Gasoline																			
Aviation	N	A1	A1	A1	A1	A1	D2	E2	E2	E2	E2	E2	E2	E2	E2	E2	E2	E2	E2
Diesel	N	A1	A1	A1	A1	A1	D2	E2	E2	E2	E2	E2	E2	E2	E2	E2	E2	E2	E2
Jet Fuel	N	A1	A1	A1	A1	A1	C2	E2	E2	E2	E2	E2	E2	E2	E2	E2	E2	E2	E2
Premium Unleaded	A1	A1	A1	A1	A1	A1	D2	E2	E2	E2	E2	E2	E2	E2	E2	E2	E2	E2	E2
Unleaded	A1	A1	A1	A1	A1	A1	E1	E2	E2	E2	E2	E2	E2	E2	E2	E2	E2	E2	E2
Glucose	A1	A1	A1	A1	A1	A1	A1	A2	A2	A2	A2	A2	A2	A2	A2	A2	A2	D2	A2
Glycerine	A1	A1	A1	A1	A1	A1	A1	A2	A2	A2	A2	A2	A2	A2	A2	A2	A2	D2	A2
Glycolic Acid to 70%	D1	D1	D1	D1	D1	D2	N	D2	D2	A2	A2	A2	A2	A2	A2	T	T	T	T
Gold Plating (Cyanide)	D1	D1	D1	D1	D1	N	A2	A2	A2	A2	A2	A2	A2	E2	A2	A2	A2	T	A2
Grape Juice	A1	A1	A1	A1	A1	A1	A1	A2	A2	A2	A2	A2	A2	A2	A2	A2	A2	D2	A2
Green Liquor (Paper Ind)	A1	A1	A1	N	A1	N	A1	A2	A2	A2	A2	A2	A2	E2	A2	A2	A2	T	T
Heptane	A1	A1	D1	A1	A1	A1	A1	A2	A2	A2	A2	A2	A2	A2	A2	A2	N	T	E2
Hexane	A1	A1	D1	A1	A1	A1	A1	A2	A2	A2	A2	A2	A2	A2	A2	A2	N	D2	E2
Hydrazine - 35%	N	T	T	N	N	T	T	T	D2	T	T	T	T	N	T	D2	T	T	T
Hydrazine Hydrate	T	T	T	N	T	T	N	N	T	T	T	T	T	N	T	D2	T	T	T
Hydroiodic Acid - 20%	D1	D1	D1	D1	C1	N	N	N	T	C2	C2	C2	C2	T	C2	T	D2	T	T
Hydrobromic Acid - 20%	A1	A1	A1	A1	A1	A1	N	N	T	A2	A2	A2	A2	A2	A2	T	T	T	N
Hydrobromic Acid - 48%	A1	A1	A1	A1	A1	A2	N	N	N	A2	A2	A2	A2	A2	A2	T	T	T	N
Hydrochloric Acid - 10%	A1	A1	A1	A1	A1	A2	D2	D2	C2	A2	A2	A2	A2	A2	A2	C2	D2	D2	D2
Hydrochloric Acid - 20%	A2	A2	A2	A2	A1	D2	D2	D2	D2	A2	A2	A2	A2	A2	A2	D2	D2	D2	N
Hydrochloric Acid - 37%	D2	D2	D2	D2	D2	E2	N	N	E2	D2	D2	D2	D2	D2	D2	D2	N	D2	N
Hydrofluoric Acid - 1-10%[2]	D2	D2	D2	D2	N	N	D2	N	D2	C2	C2	C2	C2	C2	C2	D2	D2	D2	N
Hydrofluoric Acid - 20%[2]	D2	D2	D2	D2	N	N	N	N	N	D2	D2	D2	D2	D2	D2	E2	T	D2	N
Hydrofluoric Acid 21-48%[2]	N	N	N	N	N	N	N	N	N	E2	E2	E2	E2	E2	E2	N	N	T	N
Hydrofluosilicic Acid 10%[2]	E1	E1	E1	E1	N	E2	E2	N	D2	A2	A2	A2	A2	A2	A2	C2	D2	D2	T
Hydrofluosilicic Acid - 35%[2]	D1	D1	D1	D1	N	T	T	N	E2	C2	C2	C2	C2	C2	C2	D2	D2	D2	T
Hydrogen Peroxide - 30%	D1	D1	D1	D1	C1	D2	D2	D2	D2	C2	C2	C2	C2	C2	C2	D2	T	D2	D2
Hydrogen Sulfide Gas	A1	A1	A1	A1	A1	A1	A1	A2	A2	A2	A2	A2	A2	A2	A2	A2	D2	D2	D2
Hypo (Photographic Solution)	A1	A1	A1	A1	A1	A1	A1	A2	A2	A2	A2	A2	A2	A2	A2	A2	A2	D2	A2
Hypochlorous Acid	N	N	N	N	N	N	N	N	N	N	N	N	N	N	T	N	N	T	N
Iodine, Crystals & Vapor	D1	D1	D1	D1	C1	D1	T	T	T	C2	C2	C2	C2	C2	C2	T	T	T	T
Isooctylthioglycolate[1]	D1	D1	D1	D1	D1	D1	T	T	T	D2	D2	D2	D2	D2	D2	T	T	T	T

KEY TO CHEMICAL RESISTANCE CHART

Rating Description
- A Good to Maximum Temperature of Product
- B Good to 180 °F (71 °C) Maximum
- C Good to 140 °F (60 °C)
- D Good to 120 °F (37 °C) Ambient
- E Good to 100 °F (37 °C)

Rating Description
- 1 Immersion or Constant Flow or Condensing Vapor
- 2 Occasional Splash or Spill
- 3 Fumes Only, Not Condensing
- N Not Recommended

Rating Description
- T Varies With Conditions. May Require Test. Consult Master Builders Technologies for Recommendation.

Master Builders Technologies

	Cellite 80	Corolite 503/510/505.2/505.6	Corolite 505M	Corolite 550	Cellcrete 2500 International	Cellcrete 2500 U.S.A.	Cellcrete 5500	Cellcrete 6400	Cellcrete 6550	Flakelite 103	Flakelite 161	Flakelite 164	Flakelite 180	Cellcote Lining 25	Cellcote Lining 61	Cellcote Lining 64	Cellcote Lining 68	Cellcote Lining 74	Cellcote Lining 652	Flakelite 211/212	Flakelite 222HT	Flakelite 232
Isoophorone[1]	E1	E1	E1	E1	E1	E1	E1	E1	E1	E1	E1	E1	E1	E1	E1	E1	E2	E1	E1	D2	E1	E1
Isopropyl Acetate	E1	T	T	T	N	T	T	T	E1	N	T	T	E1	N	T	T	N	E1	N	N	E2	E2
Isopropyl Alcohol	C1	C1	C1	D1	D1	C1	C1	C1	C1	D1	C1	C1	C1	D1	C1	C1	D2	C1	D1	D1	C1	D1
Isopropyl Ether	T	E1	T	T	N	T	T	T	T	N	T	T	T	N	T	T	T	T	N	D2	E2	E2
Jet Fuel JP-4	A1	A1	A1	A1	D1	A1	A1	D1	A1	D1	A1	D1	A1	D1	A1	D1	D2	A1	D1	A1	A1	A1
Kerosene	A1	A1	A1	A1	A1	A1	A1	A1	A1	A1	A1	A1	A1	A1	A1	A1	A1	A1	A1	A1	A1	A1
Ketchup	A1	A1	A1	A1	A1	A1	A1	A1	A1	A1	A1	A1	A1	A1	A1	A1	A1	A1	A1	A1	A1	A1
Lactic Acid 1-20%	A1	T	T	T	A1	A1	A1	A1	A1	A1	A1	A1	A1	A1	A1	A1	T	A1	A1	A1	A1	A1
Lactic Acid Concentrated	A1	N	N	N	A1	A1	A1	A1	A1	A1	A1	A1	A1	A1	A1	A1	N	A1	A1	A1	A1	A1
Lard	A1	E1	E1	E1	A1	A1	A1	A1	A1	A1	A1	A1	A1	A1	A1	A1	A1	A1	A1	A1	A1	A1
Lauric Acid	A1	T	T	T	A1	A1	A1	A1	A1	A1	A1	A1	A1	A1	A1	A1	N	A1	A1	A1	A1	A1
Lead Acetate	A1	A1	A1	A1	A1	A1	A1	A1	A1	A1	A1	A1	A1	A1	A1	A1	A1	A1	A1	A1	A1	A1
Lecithin[1]	D1	D1	D1	D1	D1	D1	D1	D1	D1	D1	D1	D1	D1	D1	D1	D1	D1	D1	D1	D1	D1	D1
Levulinic Acid (Saturated)	A1	D1	D1	D1	A1	A1	A1	A1	A1	A1	A1	A1	A1	A1	A1	A1	T	A1	A1	A1	A1	D1
Linseed Oil	A1	D1	D1	D1	A1	A1	A1	A1	A1	A1	A1	A1	A1	A1	A1	A1	T	A1	A1	A1	A1	A1
Lithium Hydroxide - 10%[2]	N	A1	A1	A1	D1	D1	D1	N	D1	N	N	N	N	D1	D1	N	N	D1	D1	N	N	N
Lithium Hydroxide (Saturated)[2]	N	A1	A1	A1	C1	C1	C1	N	C1	N	N	N	N	C1	C1	N	N	C1	C1	N	N	N
Maleic Acid	A1	N	N	N	A1	A1	A1	A1	A1	A1	A1	A1	A1	A1	A1	A1	N	A1	A1	A1	A1	A1
Malic Acid[1]	C1	C1	C1	T	C1	C1	C1	D1	C1	C1	C1	D1	C1	C1	C1	D1	T	C1	C1	A1	C1	A1
Mercury and Salts	A1	A1	A1	A1	A1	A1	A1	A1	A1	A1	A1	A1	A1	A1	A1	A1	A1	A1	A1	A1	A1	A1
Methanol 100%	N	D2	D2	D2	N	E1	E1	N	N	N	E1	N	N	N	E1	N	E2	N	N	E2	E2	E2
Methyl Acetate	T	T	N	N	N	T	T	N	T	N	T	N	T	N	T	N	N	T	N	N	E2	E2
Methylamyl Alcohol[1]	E1	E1	T	T	N	E1	E1	E1	E1	N	E1	E1	E1	N	E1	E1	T	E1	E1	T	E1	E1
Methylene Chloride	E2	E2	N	N	N	N	N	N	E2	N	N	N	E2	N	N	N	N	E2	N	N	E2	E2
Methyl Chloride	E1	N	N	N	N	N	N	N	E2	N	N	N	E2	N	N	N	N	E2	N	N	E2	E2
Methyl-Ethyl Ketone	E1	E2	E2	T	N	E2	E2	N	E1	N	E2	N	E1	N	E2	N	N	E1	N	N	E1	E1
Methyl Oleate[1]	D1	E1	T	T	E1	E1	E1	E1	D1	E1	E1	E1	D1	E1	E1	E1	T	D1	E1	E1	D1	D1
Methyl Isobutyl Ketone[1]	E1	E1	E1	T	N	T	T	N	E1	N	T	N	E1	N	T	N	N	E1	N	N	E1	E1
Milk - Fresh & Sour	A1	A1	A1	A1	A1	A1	A1	A1	A1	A1	A1	A1	A1	A1	A1	A1	A1	A1	A1	A1	A1	A1
Molasses	A1	A1	A1	A1	A1	A1	A1	A1	A1	A1	A1	A1	A1	A1	A1	A1	A1	A1	A1	A1	A1	A1
Naphtha - Aliphatic	A1	A1	C1	C1	C1	A1	A1	A1	A1	C1	A1	A1	A1	C1	A1	A1	A1	A1	A1	A1	A1	A1
Naphtha, Aromatic (Coal Tar)	C1	D1	D1	D1	T	D1	D1	D1	C1	T	D1	D1	C1	T	D1	D1	T	C1	T	T	C1	D1
Naphthalene (in Benzene)	D1	D1	D1	T	N	D1	D1	E1	D1	N	D1	E1	D1	N	D1	E1	T	D1	N	D2	D1	D1
Naphthenic Acid[1]	D1	D1	D1	D1	T	D1	D1	T	D1	T	D1	T	D1	T	D1	T	T	D1	T	D1	D1	D1
Nickel Plating, Bright[4]	A1	C1	C1	T	A1	A1	A1	A1	A1	A1	A1	A1	A1	A1	A1	A1	A2	A1	A1	A1	A1	A1
Nitric Acid - 5%	A1	E2	E2	E2	A1	A1	A1	A1	A1	A1	A1	A1	A1	A1	A1	A1	N	A1	A1	A1	A1	A1
Nitric Acid - 10%	B1	E2	E2	E2	C1	C1	C1	A1	A1	C1	C1	B1	B1	C1	C1	B1	N	C1	C1	D1	A1	A1
Nitric Acid - 25%	C1	N	N	N	D1	D1	D1	C1	C1	D1	D1	C1	C1	D1	D1	C1	N	C1	D1	D2	C1	D1
Nitric Acid - 40%	C1	N	N	N	D1	D1	D1	C1	C1	D1	D1	C1	C1	D1	D1	C1	N	D1	D1	E2	D2	D2
Nitric Acid - 60%	D1	N	N	N	D1	D1	D1	D1	D1	D1	D1	D1	D1	D1	D1	D1	N	D1	N	N	D2	D2
Nitric Acid - 73%	N	N	N	N	N	N	N	N	N	N	N	N	N	N	N	N	N	N	N	N	E2	E2
Nitrilotrethanol[1]	E1	E1	E1	E1	E1	E1	E1	E1	E1	E1	E1	E1	E1	E1	E1	E1	E2	E1	E1	T	E1	E1
Nitrobenzene	E1	E1	T	T	N	T	T	T	E1	N	T	T	E1	N	T	T	N	E1	N	N	E1	E1
Nitromethane	T	T	T	T	E1	T	T	N	T	E1	T	N	T	E1	T	N	T	T	T	T	D2	D2
Octanoic Acid	See Caprylic Acid																					
Octanol[1]	E1	E1	T	T	E1	E1	E1	E1	E1	E1	E1	E1	E1	E1	E1	E1	T	E1	E1	E1	E1	E1
Oils																						
Sour Crude Petroleum	A1	A1	A1	A1	A1	A1	A1	A1	A1	A1	A1	A1	A1	A1	A1	A1	A1	A1	A1	A1	A1	A1
Animal	A1	T	T	T	A1	A1	A1	A1	A1	A1	A1	A1	A1	A1	A1	A1	T	A1	A1	A1	A1	A1
Mineral	A1	A1	A1	A1	A1	A1	A1	A1	A1	A1	A1	A1	A1	A1	A1	A1	A1	A1	A1	A1	A1	A1
Vegetable	A1	D1	D1	D1	A1	A1	A1	A1	A1	A1	A1	A1	A1	A1	A1	A1	T	A1	A1	A1	A1	A1
Oleic Acid	A1	N	N	N	A1	A1	A1	A1	A1	A1	A1	A1	A1	A1	A1	A1	N	A1	A1	A1	A1	A1
Oleum	See Sulfuric Acid																					
Oxalic Acid (Saturated)	A1	T	T	T	A1	A1	A1	A1	A1	A1	A1	A1	A1	A1	A1	A1	T	A1	A1	A1	A1	A1
Para Xylene	D1	D1	T	T	N	D1	D1	E1	D1	N	D1	E1	D1	N	D1	E1	T	D1	N	N	D1	D1
Pelargonic Acid[1]	E1	E1	E1	E1	E1	E1	E1	E1	E1	E1	E1	E1	E1	E1	E1	E1	E2	E1	E1	E1	E1	E1
Pentachloroethane	E1	N	N	N	T	T	T	T	E1	T	T	T	E1	T	T	T	N	E1	N	N	E1	E1

CEILCOTE Corrosion Control Products

	Flakeline 241/242	Flakeline 251/252	Flakeline 252 International	Flakeline 281/282	Flakeline 282	Flakeline 300	Flakeline 600/FlakeLar 661	Ceilcote 681/685/Concrete T	Ceilcote 682/683/Concrete SL/SR	Ceilcote 695	Ceilcote 2500 U.S.A.	Ceilcote 2500 International	Ceilcote 5500	Ceilcote 6400	Ceilcote 6650	Corroline 505/510	Ceilcote EJ10	Ceilcote EJ11	Ceilcote EJ3/EJ4
Isophorone[1]	E1	E1	E1	E1	E1	T	T	E2	E2	D2	D2	E2	D2	D2	D2	D2	T	T	T
Isopropyl Acetate	N	E2	N	T	E2	N	N	E2	D2	D2	D2	D2	D2	D2	D2	D2	N	N	N
Isopropyl Alcohol	D1	D1	D1	D1	C1	E1	D2	C2	A2	A2	A2	A2	A2	C2	A2	A2	D2	D2	D2
Isopropyl Ether	N	E2	N	E2	E2	T	N	E2	D2	D2	D2	D2	D2	D2	D2	D2	T	T	T
Jet Fuel JP-4	D1	A1	D1	D1	A1	A1	D1	C2	A2	A2	A2	A2	A2	A2	A2	A2	N	D2	D2
Kerosene	A1	A1	A1	A1	A1	A1	A1	C2	A2	A2	A2	A2	A2	A2	A2	A2	N	D2	D2
Ketchup	A1	A1	A1	A1	A1	A1	A1	A2	A2	A2	A2	A2	A2	A2	A2	A2	A2	D2	A2
Lactic Acid 1-20%	A1	A1	A1	A1	A1	A1	T	T	D2	A2	A2	A2	A2	A2	A2	T	T	D2	T
Lactic Acid Concentrated	A1	A1	A1	A1	A1	A2	N	N	N	A2	A2	A2	A2	A2	A2	N	N	D2	N
Lard	A1	A1	A1	A1	A1	A1	D2	D2	D2	A2	A2	A2	A2	A2	A2	D2	N	D2	T
Lauric Acid	A1	A1	A1	A1	A1	A1	N	N	T	A2	A2	A2	A2	A2	A2	T	N	T	T
Lead Acetate	A1	A1	A1	A1	A1	A1	A1	A2	A2	A2	A2	A2	A2	A2	A2	A2	A2	T	A2
Lecithin[1]	A1	A1	A1	A1	A1	A1	D1	D2	D2	D2	D2	D2	D2	D2	D2	D2	A2	E2	A2
Levulinic Acid (Saturated)	A1	A1	A1	A1	A1	A1	T	T	D2	A2	A2	A2	A2	A2	A2	D2	D2	E2	D2
Linseed Oil	A1	A1	A1	A1	A1	A1	T	D2	D2	A2	A2	A2	A2	A2	A2	D2	N	D2	T
Lithium Hydroxide* - 10%	N	N	N	N	N	N	E1	A2	A2	A2	A2	A2	A2	N	A2	A2	E2	E2	E2
Lithium Hydroxide* (Saturated)	N	N	N	N	N	N	E1	A2	A2	A2	A2	A2	A2	N	A2	A2	D2	D2	D2
Maleic Acid	A1	A1	A1	A1	A1	A1	N	N	N	A2	A2	A2	A2	A2	A2	N	T	T	T
Malic Acid[1]	A1	A1	A1	A1	A1	A1	T	D2	C2	A2	C2	C2	C2	D2	A2	C2	D2	E2	D2
Mercury and Salts	A1	A1	A1	A1	A1	A1	A1	A2	A2	A2	A2	A2	A2	A2	A2	A2	A2	D2	A2
Methanol 100%	E2	D2	E2	E2	E2	E2	E2	D2	D2	D2	D2	D2	D2	D2	D2	D2	D2	E2	D2
Methyl Acetate	N	E2	N	N	D2	N	N	D2	D2	D2	D2	D2	D2	D2	D2	D2	N	N	N
Methylamyl Alcohol[1]	E1	E1	N	E1	E1	T	T	T	E2	E2	E2	E2	E2	E2	E2	E2	E2	E2	E2
Methylene Chloride	N	N	N	N	E2	N	N	N	N	E2	E2	N	N	N	E2	E2	N	E2	N
Methyl Chloride	N	N	N	N	E2	N	N	N	N	E2	N	N	N	N	E2	N	N	T	N
Methyl-Ethyl Ketone	N	E2	N	N	E1	N	N	T	D2	D2	D2	D2	D2	D2	D2	D2	N	N	N
Methyl Oleate[1]	E1	E1	E1	E1	D1	E1	T	T	D2	D2	D2	D2	D2	D2	D2	D2	N	T	T
Methyl Isobutyl Ketone[1]	N	T	N	N	E1	N	N	N	D2	D2	D2	N	D2	N	D2	D2	N	N	N
Milk - Fresh & Sour	A1	A1	A1	A1	A1	A1	A1	A2	A2	A2	A2	A2	A2	A2	A2	A2	A2	D2	A2
Molasses	A1	A1	A1	A1	A1	A1	A1	A2	A2	A2	A2	A2	A2	A2	A2	A2	A2	D2	A2
Naphtha - Aliphatic	A1	A1	A1	A1	A1	A1	A1	C2	C2	A2	A2	C2	A2	A2	A2	A2	N	D2	E2
Naphtha, Aromatic (Coal Tar)	T	D1	T	D1	C1	T	T	D2	D2	A2	C2	D2	C2	D2	C2	C2	N	D2	E2
Naphthalene (in Benzene)	N	D1	N	E1	D1	E2	E2	T	D2	C2	C2	N	C2	D2	C2	C2	N	E2	N
Naphthenic Acid[1]	T	D1	T	T	D1	D2	T	E2	E2	C2	D2	T	D2	T	D2	C2	N	T	T
Nickel Plating, Bright*	A1	A1	A1	A1	A1	A1	E2	D2	C2	A2	A2	A2	A2	A2	A2	A2	A2	T	E2
Nitric Acid - 5%	A1	A1	A1	A1	A1	A2	E2	E2	E2	A2	A2	A2	A2	A2	A2	D2	D2	E2	N
Nitric Acid - 10%	D1	D1	D1	D1	A1	D2	N	N	N	A2	B2	B2	B2	A2	A2	D2	D2	E2	N
Nitric Acid - 25%	D2	D2	D2	D2	C1	E2	N	N	N	B2	C2	C2	C2	B2	B2	N	T	E2	N
Nitric Acid - 40%	D2	E1	E1	D1	D1	E2	N	N	N	C2	C2	C2	C2	B2	C2	N	T	E2	N
Nitric Acid - 60%	E2	E2	E2	D2	D2	N	N	N	N	D2	D2	D2	D2	D2	D2	N	T	E2	N
Nitric Acid - 73%	N	N	N	N	E2	N	N	N	N	E2	N	N	N	N	N	N	N	E2	N
Nitrilotriethanol[1]	E1	E1	E1	E1	E1	T	T	D2	D2	D2	D2	D2	D2	D2	D2	D2	T	T	T
Nitrobenzene	N	T	N	T	E1	N	N	N	T	E2	T	N	T	T	E2	E2	N	E2	T
Nitromethane	T	T	E1	N	T	T	T	T	T	E2	D2	T	T	E2	T	E2	N	N	T
Octanoic Acid			(see Caprylic Acid)																
Octanol[1]	E1	E1	E1	E1	E1	E1	T	T	T	D2	D2	D2	D2	D2	D2	D2	T	N	T
Oils																			
Sour Crude Petroleum	A1	A1	A1	A1	A1	A1	A1	A2	A2	A2	A2	A2	A2	A2	A2	A2	N	E2	A2
Animal	A1	A1	A1	A1	A1	A1	T	E2	E2	A2	A2	A2	A2	A2	A2	D2	N	E2	A2
Mineral	A1	A1	A1	A1	A1	A1	A1	A2	A2	A2	A2	A2	A2	A2	A2	A2	N	E2	A2
Vegetable	A1	A1	A1	A1	A1	A1	T	D2	D2	A2	A2	A2	A2	A2	A2	C2	N	E2	A2
Oleic Acid	A1	A1	A1	A1	A1	A1	N	N	N	A2	A2	A2	A2	A2	A2	N	N	T	D2
Oleum			See Sulfuric Acid																
Oxalic Acid (Saturated)	A1	A1	A1	A1	A1	A1	T	A2	A2	A2	A2	A2	A2	A2	A2	T	A2	D2	A2
Para Xylene	N	D1	N	E1	D1	N	N	D2	D2	A2	D2	D2	D2	D2	D2	D2	N	E2	N
Pelargonic Acid[1]	E1	E1	E1	E1	E1	E1	T	T	D2	C2	C2	C2	C2	C2	C2	D2	N	T	N
Pentachloroethane	N	N	N	N	E1	N	N	E2	N	E2	E2	E2	E2	T	E2	E2	N	E2	N

KEY TO CHEMICAL RESISTANCE CHART

Rating Description
- A Good to Maximum Temperature of Product
- B Good to 180 °F (71 °C) Maximum
- C Good to 140 °F (60 °C)
- D Good to 120 °F (37 °C) Ambient
- E Good to 100 °F (37 °C)

Rating Description
- 1 Immersion or Constant Flow or Condensing Vapor
- 2 Occasional Splash or Spill
- 3 Fumes Only, Not Condensing
- N Not Recommended

Rating Description
- T Varies With Conditions. May Require Test. Consult Master Builders Technologies for Recommendation.

Master Builders Technologies

HEAVY DUTY LININGS

	Cellina 180	Corrolite 505/510/505.2/505.6	Corrolite 505M	Corrolite 550	Celkrete 2500 International	Celkrete 2500 U.S.A.	Celkrete 5500	Celkrete 6400	Celkrete 6650	Flakeline 103	Flakeline 181	Flakeline 184	Flakeline 180	Celkote Lining 25	Celkote Lining 61	Celkote Lining 64	Celkote Lining 68	Celkote Lining 74	Celkote Lining 852	Flakeline 211/212	Flakeline 222HT	Flakeline 232
Perchloric Acid - 30%	E1	N	N	N	E1	E1	E1	E1	E1	E1	E1	E1	E1	E1	E1	E1	N	E1	E1	N	E1	E1
Perchloroethylene	D1	D1	D1	D1	E1	D1	D1	D1	D1	E1	D1	D1	D1	E1	D1	D1	T	D1	D1	E2	D1	D1
Phenol - 5%	C1	N	N	N	N	E1	E1	C1	C1	N	E1	C1	C1	N	E1	C1	N	C1	N	N	D1	D1
Phenol - 85%	E1	N	N	N	N	N	N	N	E1	N	N	N	E1	N	N	N	N	E1	N	N	E1	E1
Phenol Sulfonic Acid - 65%	N	N	N	N	T	T	T	T	N	T	T	T	N	T	T	T	N	E1	N	N	N	N
Phosphoric Acid - 20%	A1	N	N	N	A1	A1	A1	A1	A1	A1	A1	A1	A1	A1	A1	A1	N	A1	A1	A1	A1	A1
Phosphoric Acid - 85%	A1	N	N	N	A1	A1	A1	A1	A1	A1	A1	A1	A1	A1	A1	A1	N	A1	A1	A1	A1	A1
Phosphorous Oxychloride[1]	T	C1	T	T	N	N	N	E1	T	N	N	E1	T	N	N	E1	T	T	N	N	T	T
Phosphorous Trichloride[1]	T	C1	T	T	N	T	T	N	T	N	T	N	T	N	T	N	T	T	N	N	N	N
Picric Acid - 10% in Alcohol	D1	T	T	T	E1	D1	D1	E1	D1	E1	D1	E1	D1	E1	D1	D1	T	D1	E1	T	D1	D1
Polyacrylic Acid - 50%[1]	D1	D1	T	T	D1	D1	D1	D1	D1	D1	D1	D1	D1	D1	D1	D1	T	D1	D1	D1	D1	D1
Potassium Acetate	A1	A1	A1	A1	A1	A1	A1	A1	A1	A1	A1	A1	A1	A1	A1	A1	A1	A1	A1	A1	A1	A1
Potassium Bichromate	A1	T	T	T	A1	A1	A1	A1	A1	A1	A1	A1	A1	A1	A1	A1	T	A1	A1	A1	A1	A1
Potassium Bromide	A1	A1	A1	A1	A1	A1	A1	A1	A1	A1	A1	A1	A1	A1	A1	A1	A1	A1	A1	A1	A1	A1
Potassium Carbonate - 25%	C1	A1	A1	A1	C1	C1	C1	E1	C1	C1	C1	E1	C1	C1	C1	E1	A1	C1	C1	E2	C1	A1
Potassium Chlorate[2]	C1	C1	C1	C1	A1	A1	A1	T	A1	C1	C1	T	C1	A1	A1	A1	A1	A1	A1	A2	A1	A1
Potassium Chloride	A1	A1	A1	A1	A1	A1	A1	A1	A1	A1	A1	A1	A1	A1	A1	A1	A1	A1	A1	A1	A1	A1
Potassium Cyanide	C1	A1	A1	A1	C1	C1	C1	T	C1	C1	C1	T	C1	C1	C1	T	A1	C1	C1	N	C1	A1
Potassium Fluoride[2]	C1	A1	A1	A1	A1	A1	A1	A1	A1	C1	C1	C1	C1	A1	A1	A1	A1	A1	A1	A1	A1	A1
Potassium Hydroxide - 10%[2]	D1	A1	A1	A1	D1	D1	D1	N	D1	D1	D1	N	D1	D1	D1	N	A1	D1	D1	N	D1	D1
Potassium Hydroxide - 50%[2]	C1	A1	A1	A1	C1	C1	C1	N	C1	C1	C1	N	E1	E1	C1	N	C1	C1	C1	N	C1	A1
Potassium Nitrate	A1	A1	A1	A1	A1	A1	A1	A1	A1	A1	A1	A1	A1	A1	A1	A1	A1	A1	A1	A1	A1	A1
Potassium Permanganate	A1	T	T	T	A1	A1	A1	C1	A1	A1	A1	C1	A1	A1	A1	C1	T	A1	A1	A1	A1	A1
Potassium Persulfate	A1	T	T	T	A1	A1	A1	D1	A1	A1	A1	D1	A1	A1	A1	D1	T	A1	A1	A1	A1	A1
Potassium Sulfate	A1	A1	A1	A1	A1	A1	A1	A1	A1	A1	A1	A1	A1	A1	A1	A1	A1	A1	A1	A1	A1	A1
Propanediol[1]	D1	D1	D1	D1	D1	D1	D1	D1	D1	D1	D1	D1	D1	D1	D1	D1	D1	D1	D1	D1	D1	D1
Propionic Acid - 100%[1]	D1	N	N	N	E1	D1	D1	T	D1	E1	D1	T	D1	E1	D1	T	N	D1	E1	T	D1	D1
Propylene Glycol	A1	A1	A1	A1	A1	A1	A1	A1	A1	A1	A1	A1	A1	A1	A1	A1	A1	A1	A1	A1	A1	A1
Pyridine	N	N	N	N	N	N	N	N	N	N	N	N	N	N	N	N	N	N	N	N	N	N
Rayon Spin Liquor	A1	C1	C1	C1	A1	A1	A1	A1	A1	A1	A1	A1	A1	A1	A1	A1	D1	A1	A1	A1	A1	A1
Salicylaldehyde[1]	E1	T	T	T	N	E1	E1	E1	E1	N	E1	E1	E1	N	E1	E1	T	E1	N	D2	E1	E1
Salicylic Acid	C1	C1	C1	T	C1	C1	C1	T	C1	C1	C1	T	C1	C1	C1	T	T	C1	C1	D2	C1	D1
Salt Brine	A1	A1	A1	A1	A1	A1	A1	A1	A1	A1	A1	A1	A1	A1	A1	A1	A1	A1	A1	A1	A1	A1
Silicon Tetrachloride[1]	T	T	T	T	N	E1	E1	N	T	N	E1	N	T	N	E1	N	T	T	N	N	T	T
Sodium Acetate	A1	A1	A1	A1	A1	A1	A1	A1	A1	A1	A1	A1	A1	A1	A1	A1	A1	A1	A1	A1	A1	A1
Sodium Bicarbonate	A1	A1	A1	A1	A1	A1	A1	A1	A1	A1	A1	A1	A1	A1	A1	A1	A1	A1	A1	A1	A1	A1
Sodium Bisulfate	C1	A1	A1	A1	C1	C1	C1	N	E1	E1	E1	N	E1	C1	C1	N	C1	C1	C1	N	E1	E1
Sodium Bisulfite	A1	A1	A1	A1	A1	A1	A1	A1	A1	A1	A1	A1	A1	A1	A1	A1	A1	A1	A1	A1	A1	A1
Sodium Bromate	A1	A1	A1	A1	A1	A1	A1	A1	A1	A1	A1	A1	A1	A1	A1	A1	A1	A1	A1	A1	A1	A1
Sodium Carbonate - Sat'd[2]	C1	A1	A1	A1	C1	C1	C1	N	E1	E1	E1	N	E1	C1	C1	N	C1	C1	C1	N	E1	E1
Sodium Chloride	A1	A1	A1	A1	A1	A1	A1	A1	A1	A1	A1	A1	A1	A1	A1	A1	A1	A1	A1	A1	A1	A1
Sodium Chlorite - Sat'd	D1	N	N	N	D1	C1	C1	C1	D1	D1	C1	C1	D1	D1	C1	C1	N	D1	D1	A2	A1	A1
Sodium Chromate[2]	A1	C1	C1	C1	A1	A1	A1	A1	A1	A1	A1	A1	A1	A1	A1	A1	T	A1	A1	A1	A1	A1
Sodium Chlorate[2]	C1	C1	C1	C1	A1	A1	A1	A1	A1	C1	C1	C1	C1	A1	A1	A1	A1	A1	A1	A1	A1	A1
Sodium Cyanide - 15%	A1	A1	A1	A1	C1	A1	A1	D1	A1	C1	B1	D1	A1	C1	A1	D1	A1	A1	C1	B1	A1	A1
Sodium Dichromate	A1	D1	D1	D1	A1	A1	A1	A1	A1	A1	A1	A1	A1	A1	A1	A1	A1	A1	A1	A1	A1	A1
Sodium Fluoride[2]	C1	A1	A1	A1	A1	A1	A1	A1	A1	C1	C1	C1	C1	A1	A1	A1	A1	A1	A1	A1	A1	A1
Sodium Hydrosulfide - 45%[2]	C1	A1	A1	A1	A1	A1	A1	C1	A1	C1	C1	D1	C1	A1	A1	C1	A1	A1	A1	E1	A1	A1
Sodium Hydroxide - 10%[2]	E1	A1	A1	A1	D1	D1	D1	N	N	N	N	N	N	D1	D1	N	D1	D1	D1	N	E1	E1
Sodium Hydroxide - 50%[2]	E1	A1	A1	A1	C1	C1	C1	N	N	N	N	N	N	C1	C1	N	A1	C1	C1	N	C1	A1
Sodium Hypochlorite - 3%[2]	N	N	N	N	N	N	N	N	N	N	N	N	N	N	N	N	N	D1	D1	D2	D2	D2
Sodium Hypochlorite - 17%[2]	N	N	N	N	N	N	N	N	N	N	N	N	N	N	N	N	N	D1	D1	N	D2	D2
Sodium Lauryl Sulfate - 20%	C1	C1	C1	C1	D1	D1	D1	D1	C1	D1	D1	D1	C1	D1	D1	D1	E1	C1	D1	D2	C1	D1
Sodium Oxalate	A1	A1	A1	A1	A1	A1	A1	A1	A1	A1	A1	A1	A1	A1	A1	A1	A1	A1	A1	A1	A1	A1
Sodium Peroxide - Peroxide Bleach[1]	A1	A1	A1	A1	A1	A1	A1	T	A1	A1	A1	T	A1	A1	A1	T	A1	A1	A1	T	A1	A1
Sodium (Acid) Phosphate	A1	C1	C1	C1	A1	A1	A1	A1	A1	A1	A1	A1	A1	A1	A1	A1	A1	A1	A1	A1	A1	A1
Sodium Phosphate (Tri)	D1	A1	A1	A1	C1	C1	C1	N	C1	E1	E1	N	E1	A1	A1	N	E1	C1	C1	N	E1	E1

CEILCOTE Corrosion Control Products

	Flakeline 241/242	Flakeline 251/252	Flakeline 252 International	Flakeline 281/282	Flakeline 282	Flakeline 300	Flakeline 600/Flakeline 651	Ceilcote 681/683/Corrocrete T	Ceilcote 682/683/Corrocrete SL/SS	Ceilcote 695	Ceilcote 2500 U.S.A.	Ceilcote 2500 International	Ceilcote 5500	Ceilcote 6400	Ceilcote 6650	Corrolene 505/510	Ceilcote EJ10	Ceilcote EJ11	Ceilcote EJ3/EJ4
Perchloric Acid - 30%	E1	E1	E1	E1	E1	D2	N	T	T	D2	D2	D2	D2	D2	D2	T	T	T	N
Perchloroethylene	E2	D1	E2	D1	D1	E2	E2	E2	D2	D2	D2	E2	D2	D2	D2	C2	N	T	T
Phenol - 5%	N	E1	N	E1	D1	N	N	N	N	B2	D2	T	D2	B2	B2	N	N	E2	T
Phenol - 85%	N	N	N	N	N	N	N	N	N	D2	N	N	N	N	D2	N	N	E2	N
Phenol Sulfonic Acid - 65%	N	T	T	T	E1	N	N	N	N	D2	T	T	T	T	D2	N	N	D2	N
Phosphoric Acid - 20%	A1	A1	A1	A1	A1	A1	E2	D2	D2	A2	A2	A2	A2	A2	A2	N	D2	E2	D2
Phosphoric Acid - 85%	A1	A1	A1	A1	A1	A1	N	N	N	A2	A2	A2	A2	A2	A2	N	T	E2	T
Phosphorous Oxychloride[1]	N	N	N	N	T	N	E2	E2	E2	T	N	N	N	N	T	C2	T	T	T
Phosphorous Trichloride[1]	N	T	N	N	T	N	E2	E2	E2	T	T	N	T	N	N	C2	T	T	T
Picric Acid - 10% in Alcohol	T	D1	E1	E1	D1	N	N	N	T	C2	C2	D2	C2	D2	D2	T	D2	D2	D2
Polyacrylic Acid - 50%[1]	D1	D1	D1	D1	D1	D1	T	T	T	D2	D2	D2	D2	D2	D2	D2	D2	T	T
Potassium Acetate	A1	A1	A1	A1	A1	A1	A1	A2	A2	A2	A2	A2	A2	A2	A2	A2	A2	E2	A2
Potassium Bichromate	A1	A1	A1	A1	A1	A1	T	E2	E2	A2	A2	A2	A2	A2	A2	C2	D2	E2	D2
Potassium Bromide	A1	A1	A1	A1	A1	A1	A1	A2	C2	A2	A2	A2	A2	A2	A2	A2	A2	E2	A2
Potassium Carbonate - 25%	A1	A1	A1	E1	A1	E2	A1	A2	A2	A2	A2	A2	A2	D2	A2	A2	A2	D2	E2
Potassium Chlorate[4]	A1	A1	A1	T	A1	A2	A2	A2	A2	A2	A2	A2	A2	D2	A2	A2	A2	D2	A2
Potassium Chloride	A1	A1	A1	A1	A1	A1	A1	A2	A2	A2	A2	A2	A2	A2	A2	A2	A2	D2	A2
Potassium Cyanide	A1	A1	A1	T	C1	N	E1	A2	A2	A2	A2	A2	A2	D2	A2	A2	A2	D2	A2
Potassium Fluoride[4]	A1	A1	A1	A1	N	N	D2	D2	C2	A2	A2	A2	A2	A2	A2	A2	A2	D2	A2
Potassium Hydroxide - 10%[2]	D1	D1	D1	N	D1	N	A1	A2	A2	C2	C2	C2	C2	N	C2	A2	C2	E2	N
Potassium Hydroxide - 50%[2]	A1	A1	A1	N	A1	N	A1	A2	A2	C2	C2	C2	C2	N	C2	A2	C2	E2	N
Potassium Nitrate	A1	A1	A1	A1	A1	A1	A1	A2	A2	A2	A2	A2	A2	A2	A2	A2	A2	E2	A2
Potassium Permanganate	A1	A1	A1	A1	A1	A1	T	D2	D2	A2	A2	A2	A2	A2	A2	D2	D2	E2	D2
Potassium Persulfate	A1	A1	A1	A1	A1	A1	T	C2	C2	A2	A2	A2	A2	C2	A2	D2	D2	E2	D2
Potassium Sulfate	A1	A1	A1	A1	A1	A1	A1	A2	A2	A2	A2	A2	A2	A2	A2	A2	A2	D2	A2
Propanediol[1]	D1	D1	D1	D1	D1	D1	D1	D2	D2	D2	D2	D2	D2	D2	D2	D2	D2	E2	D2
Propionic Acid - 100%[1]	E1	D1	E1	T	D1	T	N	N	N	D2	D2	D2	D2	T	D2	N	N	T	N
Propylene Glycol	A1	A1	A1	A1	A1	A1	A1	A2	A2	A2	A2	A2	A2	A2	A2	A2	A2	D2	A2
Pyridine	N	N	N	N	N	N	N	N	N	N	N	N	N	N	N	N	N	N	N
Rayon Spin Liquor	A1	A1	A1	A1	A1	A1	E2	D2	D2	A2	A2	A2	A2	A2	A2	C2	D2	E2	D2
Salicylaldehyde[1]	D2	E1	E1	E1	E1	E2	T	T	D2	D2	D2	N	D2	D2	D2	T	T	T	T
Salicylic Acid	D1	D1	D1	T	C1	D2	T	D2	D2	C2	C2	C2	C2	C2	C2	C2	C2	E2	C2
Salt Brine	A1	A1	A1	A1	A1	A1	A1	A2	A2	A2	A2	A2	A2	A2	A2	A2	A2	D2	A2
Silicon Tetrachloride[1]	N	E1	N	N	T	N	T	T	T	D2	D2	D2	D2	D2	D2	T	T	T	T
Sodium Acetate	A1	A1	A1	A1	A1	A1	A1	A2	A2	A2	A2	A2	A2	A2	A2	A2	A2	T	A2
Sodium Bicarbonate	E1	E1	E1	N	E1	N	A1	A2	A2	A2	A2	A2	A2	A2	A2	A2	A2	D2	A2
Sodium Bisulfate	A1	A1	A1	A1	A1	A1	A1	A2	A2	A2	A2	A2	A2	A2	A2	A2	A2	D2	A2
Sodium Bisulfite	A1	A1	A1	A1	A1	A1	A1	A2	A2	A2	A2	A2	A2	A2	A2	A2	A2	D2	A2
Sodium Bromate	A1	A1	A1	A1	A1	A1	A1	A2	A2	A2	A2	A2	A2	A2	A2	A2	A2	D2	A2
Sodium Carbonate - Sat'd[2]	E1	E1	E1	N	E1	N	A1	A2	A2	A2	A2	A2	A2	D2	A2	A2	A2	D2	D2
Sodium Chloride	A1	A1	A1	A1	A1	A1	A1	A2	A2	A2	A2	A2	A2	A2	A2	A2	A2	D2	A2
Sodium Chlorite - Sat'd	D1	D1	D1	D1	D1	N	N	T	T	C2	B2	C2	B2	B2	C2	T	D2	D2	D2
Sodium Chromate[4]	A1	A1	A1	A1	A1	A1	A2	A2	A2	A2	A2	A2	A2	A2	A2	A2	A2	D2	A2
Sodium Chlorate	A1	A1	A1	A1	A1	A1	A1	A2	A2	A2	A2	A2	A2	A2	A2	A2	A2	D2	A2
Sodium Cyanide - 15%	A1	A1	A1	A1	A1	D2	A1	A2	A2	A2	A2	A2	A2	A2	A2	A2	A2	D2	A2
Sodium Dichromate	A1	A1	A1	A1	A1	A1	A2	A2	A2	A2	A2	A2	A2	A2	A2	A2	A2	D2	A2
Sodium Fluoride[4]	A1	A1	A1	A1	E1	E2	E2	A2	A2	A2	A2	A2	A2	A2	A2	A2	A2	T	A2
Sodium Hydrosulfide - 45%[2]	A1	A1	A1	E1	A1	E2	A2	C2	A2	A2	A2	A2	A2	A2	A2	C2	A2	D2	T
Sodium Hydroxide - 10%[2]	E1	D1	D1	N	E1	N	D1	A2	A2	C2	C2	C2	C2	N	C2	A2	N	D2	A2
Sodium Hydroxide - 50%[2]	E1	E1	E1	N	E1	N	E1	A2	A2	C2	C2	C2	C2	N	C2	A2	N	D2	A2
Sodium Hypochlorite - 3%[2]	D2	D2	D2	D2	N	N	N	N	D2	D2	D2	D2	D2	D2	D2	N	D2	E2	N
Sodium Hypochlorite - 17%[2]	D2	D2	D2	D2	N	N	N	N	N	N	N	N	N	N	N	N	N	E2	N
Sodium Lauryl Sulfate - 20%	D1	D1	D1	D1	C1	D2	A2	C2	C2	A2	C2	A2	C2	C2	A2	B2	D2	E2	D2
Sodium Oxalate	A1	A1	A1	A1	A1	A1	A1	A2	A2	A2	A2	A2	A2	A2	A2	A2	A2	T	A2
Sodium Peroxide - Peroxide Bleach[1]	A1	A1	A1	T	A1	T	D1	A2	A2	A2	A2	A2	A2	D2	A2	A2	A2	D2	N
Sodium (Acid) Phosphate	A1	A1	A1	A1	A1	A1	D1	A2	A2	A2	A2	A2	A2	A2	A2	A2	A2	D2	A2
Sodium Phosphate (Tri)	E1	E1	E1	N	E1	N	E1	A2	A2	A2	A2	A2	A2	N	A2	A2	A2	A2	A2

KEY TO CHEMICAL RESISTANCE CHART

Rating Descriptions

- A Good to Maximum Temperature of Product
- B Good to 180 °F (71 °C) Maximum
- C Good to 140 °F (60 °C)
- D Good to 120 °F (37 °C) Ambient
- E Good to 100 °F (37 °C)

Rating Descriptions

- 1 Immersion or Constant Flow or Condensing Vapor
- 2 Occasional Splash or Spill
- 3 Fumes Only, Not Condensing
- N Not Recommended

Rating Descriptions

- T Varies with Conditions. May Require Test. Consult Master Builders Technologies for Recommendations.

Master Builders Technologies

	Cellite 80	Conolite Series	Conolite 5050M	Conolite 550	Colcrete 2500 International	Colcrete 2500 U.S.A.	Colcrete 5500	Colcrete 6400	Colcrete 6650	Flakelite 103	Flakelite 181	Flakelite 164	Flakelite 180	Colcote Lining 25	Colcote Lining 61	Colcote Lining 64	Colcote Lining 68	Colcote Lining 74	Colcote Lining 652	Flakelite 211/212	Flakelite 222HT	Flakelite 232
Sodium Polymethacrylate[1]	D1	D1	D1	D1	D1	D1	D1	D1	D1	D1	D1	D1	D1	D1	D1	D1	D1	D1	D1	D1	D1	D1
Sodium Sulfate	A1	A1	A1	A1	A1	A1	A1	A1	A1	A1	A1	A1	A1	A1	A1	A1	A1	A1	A1	A1	A1	A1
Sodium Sulfide (Saturated)[2]	A1	A1	A1	A1	A1	A1	A1	E1	A1	A1	A1	E1	A1	A1	A1	E1	A1	A1	A1	E1	A1	A1
Sodium Sulfite	A1	A1	A1	A1	A1	A1	A1	A1	A1	A1	A1	A1	A1	A1	A1	A1	A1	A1	A1	A1	A1	A1
Sodium Tartrate	A1	A1	A1	A1	A1	A1	A1	A1	A1	A1	A1	A1	A1	A1	A1	A1	A1	A1	A1	A1	A1	A1
Sodium Thiosulfate (Hypo)	A1	A1	A1	A1	C1	A1	A1	T	A1	C1	A1	T	A1	C1	A1	T	A1	A1	A1	A1	A1	A1
Soybean Oil	A1	T	T	T	A1	A1	A1	T	A1	A1	A1	T	A1	A1	A1	T	A1	A1	A1	A1	A1	A1
Stearic Acid	A1	N	N	N	A1	A1	A1	A1	A1	A1	A1	A1	A1	A1	A1	A1	N	A1	A1	A1	A1	A1
Styrene	D1	D1	D1	D1	N	E1	E1	N	D1	N	E1	N	D1	N	E1	N	T	D1	N	E2	D1	D1
Sugar	A1	A1	A1	A1	A1	A1	A1	A1	A1	A1	A1	A1	A1	A1	A1	A1	A1	A1	A1	A1	A1	A1
Sulfamic Acid - 25%	C1	T	T	T	C1	C1	C1	A1	C1	C1	C1	C1	C1	C1	C1	A1	T	C1	C1	A1	A1	A1
Sulfite Liquor (Paper)	A1	A1	A1	A1	A1	A1	A1	D1	A1	A1	A1	D1	A1	A1	A1	D1	A1	A1	A1	A1	A1	A1
Sulfur Dioxide (Wet)	A1	C1	C1	D1	A1	A1	A1	A1	A1	A1	A1	A1	A1	A1	A1	A1	A1	A1	A1	A1	A1	A1
Sulfur Trioxide (Wet)	A1	D1	D1	E1	A1	A1	A1	A1	A1	B1	B1	B1	A1	A1	A1	A1	E2	A1	A1	A1	A1	A1
Sulfuric Acid - 10%	A1	D1	E1	E1	A1	A1	A1	A1	A1	A1	A1	A1	A1	A1	A1	A1	E2	A1	A1	A1	A1	A1
Sulfuric Acid - 25%	A1	E2	E2	E2	A1	A1	A1	A1	A1	A1	A1	A1	A1	A1	A1	A1	N	A1	A1	A1	A1	A1
Sulfuric Acid - 50%	A1	D2	D2	D2	A1	A1	A1	A1	A1	B1	B1	B1	B1	A1	A1	A1	N	A1	A1	A1	A1	A1
Sulfuric Acid - 70%	C1	N	N	N	C1	C1	C1	C1	C1	C1	C1	C1	C1	C1	C1	C1	N	C1	C1	A2	D1	E1
Sulfuric Acid - 75%	D1	N	N	N	E1	E1	E1	E1	E1	E1	E1	E1	E1	E1	E1	E1	N	E1	E1	D2	E1	E1
Sulfuric Acid - 93-98%	N	N	N	N	N	N	N	N	N	N	N	N	N	N	N	N	N	N	N	N	E2	E2
Tall Oil	A1	B1	B1	C1	A1	A1	A1	A1	A1	A1	A1	A1	A1	A1	A1	A1	A2	A1	A1	A1	A1	A1
Tartaric Acid	A1	T	T	T	A1	A1	A1	A1	A1	A1	A1	A1	A1	A1	A1	A1	A2	A1	A1	A1	A1	A1
Tetrachloroethane[1]	D1	E1	E1	T	N	E1	E1	N	D1	N	E1	N	D1	N	E1	N	N	D1	N	N	D1	D1
Tetrachloroethylene[1]	See Perchlorethylene																					
Tetrahydrofuran	N	N	N	N	N	N	N	N	N	N	N	N	N	N	N	N	N	N	N	N	E2	E2
Tetrahydrofurfuryl Alcohol[1]	E1	T	T	T	E1	E1	E1	E1	E1	E1	E1	E1	E1	E1	E1	E1	T	E1	E1	T	E1	E1
Thionyl Chloride	N	N	N	N	N	N	N	N	N	N	N	N	N	N	N	N	N	N	N	N	N	N
Thionyl Chloride - Water Sol'n	N	N	N	N	N	N	N	N	N	N	N	N	N	N	N	N	N	N	N	N	N	N
Tin Plating (Fluoborate)	See Fluoboric Acid																					
Tin Plating (Stannate)	See Sodium Hydroxide																					
Toluol (Toluene)	E1	E1	T	T	N	E1	E1	E1	E1	N	E1	E1	E1	N	E1	E1	E2	E1	N	N	E1	E1
Toluene Sulfonic Acid	A1	T	T	T	A1	A1	A1	D1	A1	A1	A1	D1	A1	A1	A1	D1	T	A1	A1	T	A1	A1
Toluidine[1]	T	T	T	T	N	E1	E1	N	T	N	E1	N	T	N	E1	N	N	T	N	N	T	T
Triethylamine[1]	E1	T	T	T	E1	E1	E1	E1	E1	E1	E1	E1	E1	E1	E1	E1	N	E1	E1	T	E1	E1
Triethylenetetramine[1]	T	T	T	T	E1	E1	E1	E1	T	E1	E1	E1	T	E1	E1	E1	N	E1	N	T	T	T
Triethyl Phosphite[1]	E1	E1	E1	E1	E1	E1	E1	E1	E1	E1	E1	E1	E1	E1	E1	E1	T	E1	E1	E1	E1	E1
Trichloroacetic Acid - 20%	A1	N	N	N	A1	A1	A1	A1	A1	A1	A1	A1	A1	A1	A1	A1	N	A1	A1	A1	A1	A1
Trichlorobenzene (1,2,4-)[1]	E1	E1	E1	E1	E1	E1	E1	E1	E1	E1	E1	E1	E1	E1	E1	E1	T	E1	E1	T	E1	E1
Trichloroethane[1]	E1	E1	E1	T	N	E1	E1	N	E1	N	E1	N	E1	N	E1	N	N	E1	N	N	E1	E1
Trichloroethylene	E2	E1	T	T	N	E1	E1	N	E1	N	E1	N	E1	N	E1	N	N	E2	N	N	E2	E2
Tricresyl Phosphate 100%	C1	C1	C1	C1	T	T	T	T	C1	T	T	T	C1	T	T	T	D2	C1	C1	T	C1	D1
Trisodium Phosphate (Sat'd)[2]	C1	A1	A1	A1	A1	A1	A1	E1	A1	C1	C1	E1	C1	A1	A1	E1	A1	A1	A1	D2	A1	A1
Turpentine	A1	D1	D1	D1	C1	C1	C1	D1	A1	C1	C1	D1	A1	C1	C1	D1	T	A1	C1	E1	A1	A1
Urea Solutions	A1	A1	A1	A1	A1	A1	A1	A1	A1	A1	A1	A1	A1	A1	A1	A1	A1	A1	A1	A1	A1	A1
Vinegar	A1	E1	E1	E1	A1	A1	A1	A1	A1	A1	A1	A1	A1	A1	A1	A1	E1	A1	A1	A1	A1	A1
Vinyl Chloride	T	T	T	N	N	T	T	N	N	N	T	T	N	T	N	N	N	T	N	N	E2	E2
Water, Distilled & Demineralized	A1	A1	A1	A1	A1	A1	A1	A1	A1	B1	B1	B1	B1	A1	A1	A1	A1	A1	A1	A1	A1	A1
White Liquor (Paper)	C1	A1	A1	A1	A1	A1	A1	N	A1	C1	C1	N	C1	A1	A1	N	A1	A1	A1	N	A1	A1
Wine	A1	A1	A1	A1	A1	A1	A1	A1	A1	A1	A1	A1	A1	A1	A1	A1	A1	A1	A1	A1	A1	A1
Xylol (Xylene)	D1	D1	T	T	N	D1	D1	E1	D1	N	D1	E1	D1	N	D1	E1	E2	D1	N	N	D1	D1
Zinc Plating - Acid Fluoborate	See Fluoboric Acid																					
Zinc Plating - Cyanide	See Sodium Hydroxide 10%																					
Zinc Plating - Acid Sulfate	A1	C1	C1	C1	A1	A1	A1	A1	A1	A1	A1	A1	A1	A1	A1	A1	E1	A1	A1	A1	A1	A1

CEILCOTE Corrosion Control Products

	Flakeline 241/242	Flakeline 251/252	Flakeline 252 International	Flakeline 281/282	Flakeline 282	Flakeline 300	Flakeline 600/Flakelar 681	Ceilcote 681/685/Concrete T	Ceilcote 682/683/Concrete SL/S	Ceilcrete 895	Ceilcrete 2500 U.S.A.	Ceilcrete 2500 International	Ceilcrete 5500	Ceilcrete 6400	Ceilcrete 6850	Corrolite Series	Ceilcote EJ10	Ceilcote EJ11	Ceilcote EJ3/EJ4
Sodium Polymetacrylate[1]	D1	D1	D1	D1	D1	D1	D1	D2	D2	D2	D2	D2	D2	D2	D2	D2	D2	E2	D2
Sodium Sulfate	A1	A1	A1	A1	A1	A1	A1	A2	A2	A2	A2	A2	A2	A2	A2	A2	A2	D2	A2
Sodium Sulfide (Saturated)[2]	A1	A1	A1	E1	A1	E2	A2	A2	A2	A2	A2	A2	A2	D2	A2	A2	D2	D2	D2
Sodium Sulfite	A1	A1	A1	A1	A1	A1	A1	A2	A2	A2	A2	A2	A2	A2	A2	A2	A2	D2	A2
Sodium Tartrate	A1	A1	A1	A1	A1	A1	A1	A2	A2	A2	A2	A2	A2	A2	A2	A2	A2	D2	A2
Sodium Thiosulfate (Hypo)	A1	A1	A1	T	A1	A1	A1	A2	A2	A2	A2	A2	A2	A2	A2	A2	A2	D2	A2
Soybean Oil	A1	A1	A1	A1	A1	A1	A2	D2	C2	A2	A2	A2	A2	A2	A2	D2	N	D2	D2
Stearic Acid	A1	A1	A1	A1	A1	A1	N	D2	D2	A2	A2	A2	A2	A2	A2	D2	N	T	D2
Styrene	N	E1	N	N	D1	E2	E2	D2	D2	D2	D2	N	D2	N	D2	D2	N	E2	N
Sugar	A1	A1	A1	A1	A1	A1	A1	A2	A2	A2	A2	A2	A2	A2	A2	A2	A2	D2	A2
Sulfamic Acid - 25%	A1	A1	A1	A1	A1	A1	T	T	T	A2	A2	B2	B2	A2	B2	D2	D2	E2	D2
Sulfite Liquor (Paper)	A1	A1	A1	D1	A1	A1	A2	A2	A2	A2	A2	A2	A2	C2	A2	A2	A2	E2	A2
Sulfur Dioxide (Wet)	A1	A1	A1	A1	A1	A1	A1	A2	A2	A2	A2	A2	A2	A2	A2	A2	D2	D2	D2
Sulfur Trioxide (Wet)	A1	A1	A1	A1	A1	A1	E1	E2	E2	A2	A2	A2	A2	A2	A2	C2	D2	D2	N
Sulfuric Acid - 10%	A1	A1	A1	A1	A1	A1	E2	D2	D2	A2	A2	A2	A2	A2	A2	C2	D2	D2	N
Sulfuric Acid - 25%	A1	A1	A1	A1	A1	A2	N	E2	E2	A2	A2	A2	A2	A2	A2	D2	D2	D2	N
Sulfuric Acid - 50%	A1	A1	A1	A1	A1	A2	N	E2	E2	A2	A2	A2	A2	A2	A2	D2	D2	D2	N
Sulfuric Acid - 70%	E1	E1	E1	E1	E1	E2	N	N	N	A2	A2	A2	A2	A2	A2	N	D2	D2	N
Sulfuric Acid - 75%	E1	E1	E1	E1	E1	D2	N	N	N	B2	C2	C2	C2	B2	C2	N	E2	D2	N
Sulfuric Acid - 93-98%	N	N	N	N	E2	N	N	N	N	D2	N	N	N	N	N	N	N	E2	N
Tall Oil	A1	A1	A1	A1	A1	A1	E2	C2	C2	A2	A2	A2	A2	A2	A2	A2	N	T	D2
Tartaric Acid	A1	A1	A1	A1	A1	A1	A2	A2	A2	A2	A2	A2	A2	A2	A2	A2	A2	D2	A2
Tetrachloroethane[1]	N	E1	N	N	D1	N	N	N	T	D2	E2	N	D2	E2	D2	D2	N	T	N
Tetrachloroethylene[1]	See Perchloroethylene																		
Tetrahydrofuran	N	N	N	N	E2	N	N	N	N	E2	N	N	N	N	E2	N	N	N	N
Tetrahydrofurfuryl Alcohol[1]	E1	E1	E1	E1	E1	T	T	D2	D2	D2	D2	D2	D2	D2	D2	D2	T	T	T
Thionyl Chloride	N	N	N	N	N	N	N	N	N	N	N	N	N	N	N	N	N	T	N
Thionyl Chloride - Water Sol'n	N	N	N	N	N	N	N	N	N	T	N	N	N	N	T	T	N	T	N
Tin Plating (Fluoborate)	See Fluoboric Acid																		
Tin Plating (Stannate)	See Sodium Hydroxide																		
Toluol (Toluene)	N	E1	N	E1	E1	N	E2	E2	E2	D2	D2	D2	D2	D2	D2	D2	N	E2	N
Toluene Sulfonic Acid	A1	A1	A1	D1	A1	N	T	D2	D2	A2	A2	A2	A2	C2	A2	D2	T	T	T
Toluidine[1]	N	E1	N	N	T	N	N	T	T	T	D2	N	D2	N	T	T	N	T	N
Triethylamine[1]	E1	E1	E1	E1	E1	T	T	N	T	D2	D2	D2	D2	D2	D2	T	T	T	T
Triethylenetetramine[1]	N	E1	E1	E1	T	T	N	N	T	D2	D2	D2	D2	D2	D2	T	T	T	T
Triethyl Phosonate[1]	E1	E1	E1	E1	E1	E1	T	D2	D2	D2	D2	D2	D2	D2	D2	D2	T	T	T
Trichloroacetic Acid - 20%	A1	A1	A1	A1	A1	A1	N	N	N	A2	A2	A2	A2	A2	A2	N	D2	T	T
Trichlorobenzene (1,2,4-)[1]	E1	E1	E1	E1	E1	T	T	D2	D2	D2	D2	D2	D2	D2	D2	D2	N	T	T
Trichloroethane[1]	N	E1	N	N	E1	N	N	D2	D2	D2	D2	N	D2	N	D2	D2	N	E2	N
Trichloroethylene	N	E2	N	N	E2	N	N	N	E2	D2	D2	N	D2	D2	D2	D2	N	E2	N
Tricresyl Phosonate 100%	C1	T	T	T	A1	T	E2	E2	E2	C2	E2	E2	E2	E2	C2	C2	T	T	T
Trisodium Phosonate (Sat'd)[2]	A1	A1	A1	E1	A1	D2	A1	A2	A2	A2	A2	A2	A2	C2	A2	A2	C2	D2	C2
Turpentine	A1	A1	A1	D1	A1	E1	T	D2	D2	A2	C2	C2	C2	D2	A2	A2	N	E2	T
Urea Solutions	A1	A1	A1	A1	A1	A1	A1	A2	A2	A2	A2	A2	A2	A2	A2	A2	A2	D2	A2
Vinegar	A1	A1	A1	A1	A1	A1	E2	D2	D2	A2	A2	A2	A2	A2	A2	B2	D2	D2	D2
Vinyl Chloride	N	E2	N	N	E2	N	N	N	N	E2	E2	N	E2	N	E2	E2	N	T	N
Water, Distilled & Demineralized	A1	A1	A1	A1	A1	A1	A1	A2	A2	A2	A2	A2	A2	A2	A2	A2	A2	D2	A2
White Liquor (Paper)	A1	A1	A1	N	A1	N	A1	A2	A2	A2	A2	A2	A2	A2	A2	A2	A2	T	D2
Wine	A1	A1	A1	A1	A1	A1	A1	A2	A2	A2	A2	A2	A2	A2	A2	A2	A2	D2	A2
Xylol (Xylene)	N	D1	N	E1	D1	N	N	D2	D2	D2	D2	D2	D2	D2	D2	D2	N	E2	N
Zinc Plating - Acid Fluoborate	See Fluoboric Acid																		
Zinc Plating - Cyanide	See Sodium Hydroxide 10%																		
Zinc Plating - Acid Sulfate	A1	A1	A1	A1	A1	A1	D1	C2	C2	A2	A2	A2	A2	A2	A2	A2	A2	D2	D2

KEY TO CHEMICAL RESISTANCE CHART

Rating Description
- A Good to Maximum Temperature of Product
- B Good to 180 °F (71 °C) Maximum
- C Good to 140 °F (60 °C)
- D Good to 120 °F (37 °C) Ambient
- E Good to 100 °F (37 °C)

Rating Description
- 1 Immersion or Constant Flow or Condensing Vapor
- 2 Occasional Splash or Soil
- 3 Fumes Only, Not Condensing
- N Not Recommended

Rating Description
- * Varies With Conditions. May Require Test. Consult Master Builders Technologies for Recommendation.

Master Builders Technologies

PROTECTIVE COATINGS

	CelkGard® 650 HB	CelkGard 650 HB/FDA	CelkGard 615/620	CelkGard 630	CelkGard 470	CelkGard 480
Acetic Acid - 10%	N	N	N	N	D2	C2
Acetone - 10%	E2	E2	E2	E1	D2	D2
Acetone - 100%	E2	E2	E2	E1	E2	D2
Alum	D2	D2	C2	B1	C2	B2
Aluminum Chloride	D2	D2	C2	C1	C2	B2
Aluminum Sulfate	D2	D2	C2	C1	C2	E2
Ammonia Anhydrous Liquid	D2	D2	C2	E1	B2	B2
Ammonia Aqua	D2	D2	D2	C2	B2	B2
Ammonia Wet Gas	D2	D2	D2	C2	B3	B3
Ammonium Chloride	D2	D2	A2	B2	C2	E2
Ammonium Hydroxide - 20%	D2	D2	A2	C2	B2	B2
Ammonium Nitrate	D2	D2	A2	C2	C2	E2
Ammonium Sulfate	D2	D2	A2	C2	C2	E2
Aniline	N	N	N	N	N	N
Benzene	E2	E2	D2	E1	D2	E1
Benzoic Acid	D2	D2	C2	B2	B2	B2
Benzyl Chloride	N	N	N	C2	D2	D2
Black Liquor (Paper)	D2	D2	C2	C1	C2	B2
Bleach	N	N	N	C2	C2	B2
Boric Acid	D2	D2	D2	C2	B2	B2
Bromine Water - 5%	N	N	N	C2	C2	B2
Butanol	D2	D2	C2	D1	C2	C2
Butyl Cellosolve	D2	D2	C2	D1	C2	C2
Butyl Cellosolve Acetate	D2	D2	C2	D1	C2	C2
Cadmium Plating (Cyanide)	A2	A2	A2	C2	C2	B2
Calcium Bisulfite	A2	A2	A2	C1	B2	B2
Calcium Chloride	A2	A2	D2	C2	C2	E2
Calcium Hydroxide	A2	A2	C2	C1	C2	C2
Calcium Hydrochlorite 5%	N	N	N	N	C2	C2
Calcium Nitrate	D2	D2	C2	C1	C2	A2
Carbon Bisulfide Fumes	E2	E2	D2	C2	D2	C2
Carbon Tet	E2	E2	E2	E1	C2	B2
Cellosolve	D2	D2	D2	D1	C2	C2
Chlorine Gas (Wet)	N	N	N	N	N	N
Chlorine Water	N	N	E2	C2	N	N
Chlorobenzene	D2	D2	D2	D1	C2	C2
Chloroform	N	N	N	N	N	N
Chromic Acid - 10%	N	N	N	E2	C2	C2
Chrome Plating	N	N	N	D2	N	N
Chromic Chloride	D2	D2	C2	C1	C2	C2
Citric Acid	D2	D2	D2	C2	C2	C2
Copper Plating (Cyanide)	E2	D2	C2	C2	C2	C2
Copper Plating (Acid)	N	N	D2	C2	C2	C2
Dextrose	E1	D1	C2	C1	C2	C2
Ethanol	C2	C2	C2	D1	C2	C2
Ethyl Acetate	E2	E2	D2	C2	E2	E2

KEY TO CHEMICAL RESISTANCE CHART

Rating Description

- A Good to Maximum Temperature of Product
- B Good to 160 °F (71 °C) Maximum
- C Good to 140 °F (60 °C)
- D Good to 120 °F (37 °C) Ambient
- E Good to 100 °F (37 °C)

Rating Description

- 1 Immersion or Constant Flow or Condensing Vapor
- 2 Occasional Splash or Spill
- 3 Fumes Only, Not Condensing
- N Not Recommended

Rating Description

- T Varies With Conditions. May Require Test. Consult Master Builders Technologies for Recommendation.

CEILCOTE Corrosion Control Products

	CeilGard 650 HB	CeilGard 650 HB, FDA	CeilGard 615/620	CeilGard 630	CeilGard 470	CeilGard 480
Ethylene Dichloride	N	N	N	N	N	N
Ethylene Glycol	D2	D2	D2	C1	C2	C2
Ferric Chloride	D2	D2	C2	C1	C2	C2
Ferric Sulfate	D2	D2	C2	C1	D2	C2
Fertilizer - Dry	A3	A3	A3	B3	D2	C2
Fertilizer - Liquid	D2	C2	C2	C1	C2	C2
Formaldehyde	D2	D2	D2	D1	C2	C2
Gasoline - Aviation	C2	C2	C2	C1	C2	C2
Gasoline - Diesel	C2	C2	C2	C1	D2	D2
Gasoline - Jet Fuel	D2	D2	C2	C1	D2	C2
Gasoline - Prem. Unleaded	D2	D2	C2	D1	C2	C2
Gasoline - Unleaded	E2	E2	E2	C1	C2	C2
Glycerine	D1	D1	B2	B1	C2	D1
Green Paper Liquor	D2	D2	A2	C1	C2	C2
Hexane	E1	E1	C2	C1	D2	C2
HCL - 1-10%	E2	E2	D2	C2	C2	C2
Hydrofluosilicic Acid	A2	A2	A2	C2	C2	C2
Hydrogen Peroxide - 30%	A2	A2	A2	C2	C2	C2
H_2S - Wet	E2	E2	E2	B2	D2	C2
Hypo (Photographic Liquid)	D1	D1	A2	C1	C2	C2
IPA	D2	D2	A2	C1	C2	C2
JP4 Jet Fuel	D2	D2	C2	C1	D2	C2
Kerosene	D1	D1	C2	B1	C2	C2
Lactic Acid - 1-10%	D2	D2	D2	B2	C2	C2
MeOH	C2	C2	C2	C2	C2	C2
MEK	D2	D2	D2	C2	D2	C2
MIBK	D2	D2	D2	C2	D2	C2
MICK	D2	D1	D2	C1	C2	C2
Molasses	E1	D1	C2	C1	C2	A2
Muriatic Acid	N	N	N	N	N	N
Naptha (Aliphatic)	D1	D1	E1	C1	D2	D2
Naptha (Aromatic)	D2	D2	D2	C1	C2	C2
Nitric Acid - 5%	E2	E2	E2	D2	C2	C2
Nitric Acid - 10%	N	N	E2	D2	C2	C2
Nitrobenzene	E2	E2	D2	C2	E2	E2
Oil, Animal	D2	D2	C2	C1	C2	C2
Oil, Mineral	E1	E1	C2	C1	C2	D2
Petroleum, Sour Crude	D2	C2	C2	C1	C2	D2
Oil, Vegetable	D2	D1	C2	C1	C2	D2
Para Xylene	E2	E2	D2	C1	N	N
Perchloroethylene	E2	D2	D2	C1	N	E2
Phenol - 5%	N	N	N	D2	N	D2
Phenol - 85%	N	N	N	D2	N	N
Phosphoric Acid - 20%	N	N	N	D2	C2	C2
Phosphoric Acid - 85%	N	N	N	E2	N	N
Potassium Bichromate	D2	D2	C2	B2	C2	C2

KEY TO CHEMICAL RESISTANCE CHART

Rating Descriptions
- A Good to Maximum Temperature of Product
- B Good to 180 °F (71 °C) Maximum
- C Good to 140 °F (60 °C)
- D Good to 120 °F (37 °C) Ambient
- E Good to 100 °F (37 °C)

Rating Descriptions
- 1 Immersion or Constant Flow or Condensing Vapor
- 2 Occasional Splash or Soil
- 3 Fumes Only, Not Condensing
- N Not Recommended

Rating Descriptions
- T Varies With Conditions, May Require Test. Consult Master Builders Technologies for Recommendation.

Master Builders Technologies

PROTECTIVE COATINGS

	CelkGard 650 HB	CelkGard 650 HB FDA	CelkGard 615/620	CelkGard 630	CelkGard 470	CelkGard 490
Potassium Chloride	E1	E1	C2	C1	C2	C2
Potassium Hydroxide - 10%	A2	A2	A2	C1	C2	C2
Potassium Hydroxide - 50%	A2	A2	A2	C1	D2	C2
Propylene Glycol	E1	D1	A2	C1	C2	A2
Rayon Spin Liquor	N	N	C2	B2	C2	C2
Salt Brine	D1	D1	B2	C1	C2	C2
Sodium Bicarb	E1	D1	C2	C1	C2	A2
Sodium Bisulfate	D2	D2	C2	C2	C2	C2
Sodium Carbonate	D1	D1	C2	C1	C2	A2
Sodium Chlorate	D1	D1	A2	C1	C2	C2
Sodium Chloride	E1	E1	C2	C1	D2	C2
Sodium Chromate	D2	D2	C2	C2	C2	C2
Sodium Dichromate	C2	C2	C2	C2	C2	C2
Sodium Hydroxide - 10%	C2	E1	C2	C1	C2	C2
Sodium Hydroxide - 50%	C2	E1	C2	C1	D2	C2
Sodium Hypochlorite - 3%	N	N	N	N	C2	C2
Sodium Phosphate - 25%	C2	E1	C2	C2	C2	A2
Sodium Sulfate	C2	D1	C2	C1	C2	C2
Sodium Sulfide	C2	C2	C2	C1	C2	C2
Sodium Sulfite	C2	C2	C2	C1	C2	A2
Sodium Thiosulfate	C2	D1	C2	C1	C2	C2
Styrene	E2	E2	D2	D1	C2	C2
Sugar	E1	D1	C2	C1	C2	C2
Sulfur Dioxide (Wet) Sulfurous Acid	E2	D2	D2	C2	C2	C2
Sulfur Trioxide (Wet)	E2	E2	E2	C2	D2	C2
Sulfuric Acid - 10%	N	N	N	D2	D2	D2
Sulfuric Acid - 25%	N	N	N	D2	D2	D2
Sulfuric Acid - 50%	N	N	N	E2	N	N
Sulfuric Acid - 70%	N	N	N	N	N	N
Sulfuric Acid - 75%	N	N	N	N	N	N
Sulfuric Acid - 93-98%	N	N	N	N	N	N
Tall Oil	D2	D2	C2	C2	C2	C2
Toluene	E2	D2	D2	D1	C2	C2
Trichloroethane	E2	E2	C2	D1	E2	D2
Trichloroethylene	E2	E2	E2	D1	E2	D2
Tricresyl Phosphate	E1	E1	C2	C1	C2	C2
Trisodium Phosphate	E1	D1	C2	C1	C2	C2
Turpentine	E1	D1	C2	B1	C2	D2
Urea	D2	D2	C2	C1	C2	C2
Vinegar	E2	D2	D2	D2	D2	C2
Water, Distilled	E1	D1	C2	C1	D2	A2
White Liquor - Paper	C2	C2	C2	C1	C2	C2
Wine	E1	E1	A2	D1	C2	C2
Xylol	E2	D2	C2	D1	C2	C2
Zinc Plating (Acid Sulfate)	D2	D2	D2	C2	D2	C2

KEY TO CHEMICAL RESISTANCE CHART

Rating Description
- A Good to Maximum Temperature of Product
- B Good to 180 °F (71 °C) Maximum
- C Good to 140 °F (60 °C)
- D Good to 120 °F (37 °C) Ambient
- E Good to 100 °F (37 °C)

Rating Description
- 1 Immersion or Constant Flow or Condensing Vapor
- 2 Occasional Splash or Soil
- 3 Fumes Only, Not Condensing
- N Not Recommended

Rating Description
- T Varies With Conditions. May Require Test. Consult Master Builders Technologies for Recommendation.

Solving corrosion problems for industry, worldwide.

Master Builders Technologies

From floors to stacks, Ceilcote corrosion control products from Master Builders, helps hundreds of industries solve their toughest corrosion problems.

Master Builders Technologies is industry's partner in corrosion problem-solving. As the pioneer and technological leader in polymer linings, coatings, flooring and grout, we have become an increasingly important factor in the cost-effective operation of hundreds of industrial plants and processes.

Our corrosion-fighting products are state-of-the-art. Proven products such as Ceilcrete, Brutem, Ceilcote, Coroline, Tarpon Flake, Concresive, Poly Plus and Flakeline are unsurpassed in solving industry's toughest corrosion problems.

Master Builders Technologies product and service base has expanded in both scope and reach. We tap a tremendous range of company assets to meet our customers' needs, from special formulations through skilled installation, anywhere in the World.

Protective Coatings

Our family of Coatings for metal, concrete and other substrates solves corrosion problems by the hundreds. These easy to apply coatings include polyesters, epoxies, coal tar epoxies, urethanes, phenolics, epoxy novolaks and specialized formulations that will cure below freezing.

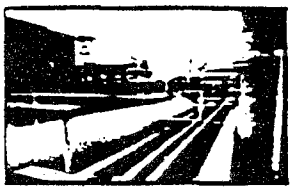

Nowhere else will you find such a wide range of protection from atmospheric corrosion.

Monolithic Linings

The corrosive environments encountered in many industries we serve vary widely in the demands they make on linings. Pickling tanks require one type; flocculation tanks another. The oil and gas industry requires protection for facilities aboveground, belowground and underwater. An electric utilities gas desulfurization system may require five different lining types.

But so long as the corrosion problem can be solved by a polymer-based lining — and the exceptions are rare — Master Builders Technologies has the solution.

Our linings are monolithic, without seams or joints. They form a continuous, protective barrier against corrosion. They are made of epoxy, polyester and other special polymers. They adhere to carbon steel, alloy and concrete surfaces.

They provide excellent resistance to permeation, chemicals, abrasion and, of course, corrosion. They have immersion temperature resistance to 200 degrees F. and dry temperature resistance to 400 degrees F. They cure quickly, are easy to maintain and provide long, cost-effective service life. Today, millions of square feet of Master Builders Technologies linings protect industrial installations worldwide.

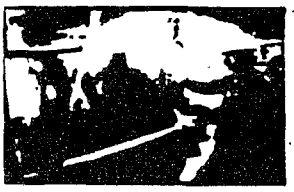

Flooring Systems

Our flooring systems supply specialized materials which solve the specific corrosion problems found in a wide range of industries, from utilities turbine rooms to pharmaceutical plants. Our floors protect concrete from attack by acids, alkalis and chemicals of all kinds — including water and lubricating oils. They are further specialized to solve problems of abrasion and skid resistance and heavy traffic. From light-duty concrete sealers to heavy-duty trowel-applied systems, Master Builders Technologies provides the answers.

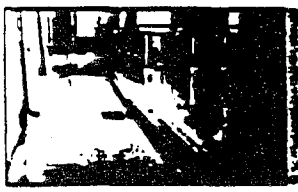

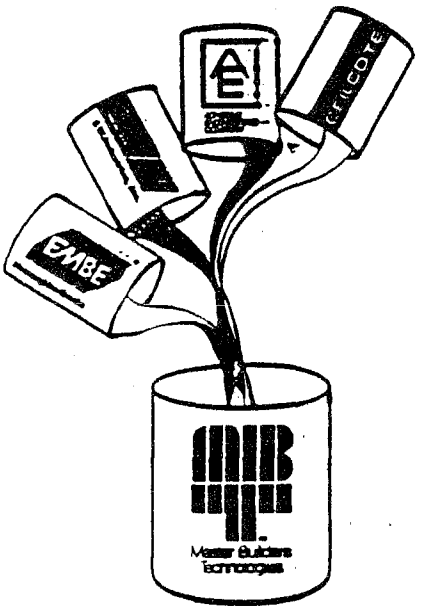

YOUR BEST DEFENSE AGAINST CORROSION

Ceilcote® Corrosion Control Products offer a broad spectrum of solutions to your corrosion problems in moderate to the most aggressive chemical environments. Whether subjected to chemical immersion, spillage, fumes, or environmental corrosion, our range of polymer linings, floorings and coatings form a continuous protective barrier against corrosion.

Highly engineered fillers combined with flake, mat or fabric reinforcement, and a full range of polymer-based matrix systems optimize resistance to permeation and chemical attack.

Special formulations resist 98% sulfuric acid, bridge cracks in concrete, resist abrasion/mechanical abuse, and cure below freezing.

Our systems protect metal or concrete surfaces, cure quickly to minimize downtime, are easy to maintain and provide a long, cost-effective service life.

We've been industry's partner in corrosion problem-solving for over half a century. Chances are, we already have a solution to your problem.

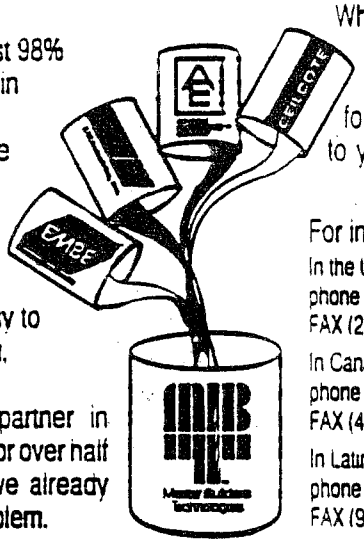

Whatever your needs, you can rely on Ceilcote Corrosion Control Products for cost effective answers to your specific problems.

For immediate attention call:

In the U.S.A.
phone 1-800-227-3350
FAX (216) 831-6460

In Canada
phone 1-800-227-3350
FAX (416) 741-7925

In Latin America
phone (905) 557-5544
FAX (905) 395-7903.

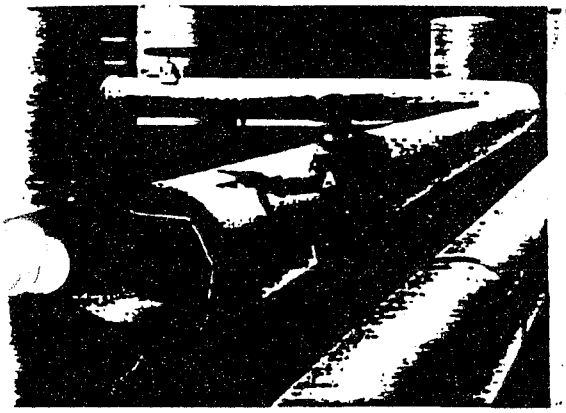

CEILCOTE IT!

APPLYING TECHNOLOGICAL LEADERSHIP TO PROBLEM SOLVING

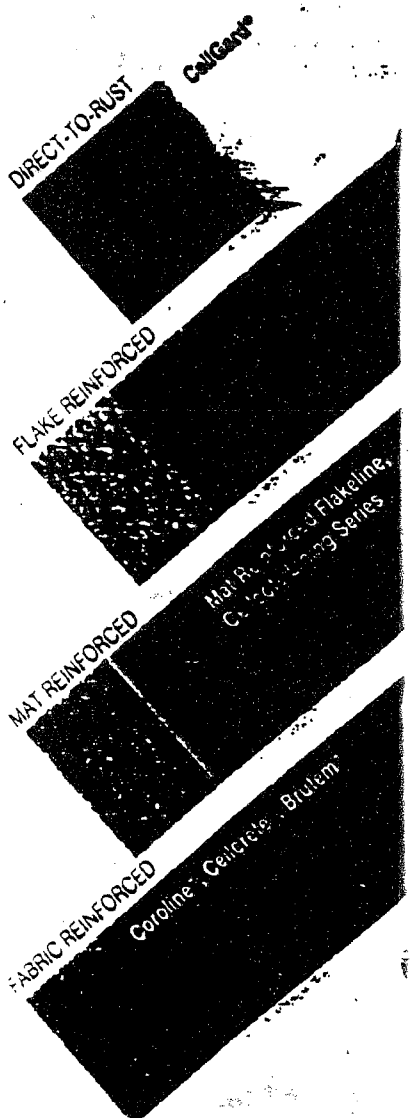

MASTER BUILDERS COVERS ALL YOUR NEEDS.

MASTER BUILDERS PRODUCTS AND SERVICES

ADHESIVES
Structural
Non-Structural

COATINGS
Protective
Decorative

EPOXY INJECTION

FIELD INSTALLATION SERVICES

FLOORING
Polymer
Cementitious

GROUTS
Equipment
Rail

MARINE SYSTEMS
Coatings
Pile Encapsulation

MONOLITHIC LININGS

REPAIR PRODUCTS FOR CONCRETE
Cementitious
Polymer

SEALANTS
Flexible
Semi-Rigid

SEALERS
Penetrating
Surface Film

TRAFFIC WEAR COURSES

WATERPROOFING MEMBRANES

Master Builders Technologies

Headquarters of the Americas
Master Builders, Inc.
23700 Chagrin Boulevard, Cleveland, OH 44122
Tel. (216) 831-5500 • Tel. (800) 227-3350
Fax. (216) 831-6460

Master Builders Technologies Ltd.
3637 Weston Road, Toronto, Ontario
Canada M9L 1W1
Tel. (416) 741-3830
Fax. (416) 741-7925

Tecnocreto SA de CV
Blvd M Avila Camacho #80, Mexico 10 DF, Mexico
Tel. (905) 557-5544
Fax. (905) 395-7903

Cellcote Ingenieros en Corrosion SA
Presa Escame No 32, Col Irrigacion
Mexico 10 DF, Mexico
Tel. (905) 395-8422
Fax. (905) 557-0772

Master Builders, Inc.
Post Office Box 1915
Trujillo Alto, Puerto Rico 00760-1915
Tel. (1-809) 761-4450

Aquasa, SA, Hipolito Yrigoyen, 1628-Piso 7
1344 Buenos Aires, Argentina
Tel. (54-1) 46-7200
Fax. (54-1) 798-1019

Embecon, Industria e Comercio Ltda.
Rua Laguna, 476
CEP 04728-Sao Paulo – SP, Brazil
Tel. (55-11) 246-3588
Fax. (55-11) 246-3890

Industrias Tecnoconcreto de Colombia, S.A.
Calle 76, Nr. 13-27, Bogota, Colombia
Tel. (57-1) 217-0255
Fax. (57-1) 255-7141

Concretesa, Apartado 2515, (Sosava 133)
Quito, Ecuador
Tel. (593-2) 551-234

MBT de Venezuela, C.A.
Centro Comercial Avenida Libertador
Mezzanina Sur, Entre Avenida Los Jabillos
y Calle Negrin, Caracas 1050, Venezuela
Tel. (58-2) 725474, 725475
Fax. (58-2) 726120

U.S. District Sales Offices
1411 Industrial Road
San Carlos, CA 94070
Tel. (415) 592-7900
Fax. (415) 594-0147

6119 Westview
Houston, TX 77224
Tel. (713) 681-0345
Fax. (713) 681-7590

140 Sheldon Road
Berea, OH 44017
Tel. (216) 243-0700
Fax. (216) 243-8439

320 West Fletcher, #109
Tampa, FL 33612
Tel. (813) 931-5570
Fax. (813) 932-4146

9A South Gold Drive
Trenton, NJ 08691
Tel. (609) 890-2700
Fax. (609) 890-1124

Printed in U.S.A.

APPENDIX D-10, DATA SHEET #5

CHEMICAL COMPATIBILITY CHART
FUTURA COATINGS

GEOTHANE

GEOMEMBRANE CONTAINMENT SYSTEMS

AND

TANK LINING SPECIFICATION

FUTURA COATINGS, I
9200 LATTY AVEN
HAZELWOOD (ST. LOUIS) M

FUTURA COATINGS, INC.
GEOTHANE CONTAINMENT SYSTEMS
AND
TANK LINING SPECIFICATION

PREFACE

This is intended as a basic guide for owners, specifiers, and engineers in the preparation of more detailed specifications governing the application of elastomeric, spray-applied, Geothane memorane lining and covering systems. An effort has been made within this specification to outline the qualities and application parameters desired as part of the total membrane system.

The suggested dry film thickness of a Futura Geothane System is based on a 50 mil dry film thickness. This will provide adequate thickness for chemical resistance and resistance to mechanical damage and weatherability. In applications where mechanical damage is not a concern, the memorane may be reduced to 35 mils dry film thickness. Longevity of service is directly proportional to the total membrane thickness. As a result, many engineers, architects and owners are specifying thicknesses as great as 100 mils to obtain maximum longevity.

In addition to the geomembrane lining or cover, your containment system may also include: The sub-structure that supports the liner, the anchor system that holds the liner and cover in place, and substrate vent systems that allow gas to escape from beneath the liner or cover. Since construction or installation of all these items can affect the performance of the final containment system, these items are also addressed:

Appendix #1 "Chemical Resistance of Geothane Elastomeric Coatings" outlines the general chemical resistance of these materials. Futura Coatings, Inc. may require a representative sample of the waste material for evaluation particularly where non-recommended chemicals are contained in the affluent in trace amounts.

SCOPE

This specification covers the general installation of Geothane 520 and/or Geothane 5020 materials in the following applications:

Geomembrane Lining Systems - Earthen Basins or Reservoirs
Lining Steel Tanks
Lining Concrete Basins or Tanks
Repair of Failed Plastic Basin Liners
Environmental Covers

For other applications or specific project information not covered in this Specification Guideline, contact Futura's Technical Services Department.

1.0 GENERAL REQUIREMENTS

1.1 For an earthen reservoir a complete geo-technical survey shall be conducted to determine the suitability of the proposal site. This survey will detect the presence of organic wastes, other decomposing material, and soil instability that can be detrimental to liner performance. Once the suitability of the site has been established, proceed with the development of an excavation plan based on the overall containment structure design.

1.2 The substrate must be dry prior to application of coating. The type of surface preparation will depend on the nature of the substrate as covered in Section 3.0.

1.3 Application Temperatures

Geothane 520 - 45°F Minimum and Rising
Geothane 5020 - 35°F Minimum and Rising

1.4 Installer shall be experienced in this line of work and shall be conversant with both material application and surface preparation.

The installer shall provide all labor, materials, equipment, and incidentals required to provide a complete geomembrane system as indicated on drawings and specified in this manual.

The installer shall provide certification from the manufacturer that he is an approved contractor having demonstrated by previous experience his ability to do the work. Installers without the required previous experience certification shall obtain factory technical assistance.

1.5 Coating materials shall be stored in a cool dry environment and shall not be used past their stated shelf life. All materials shall be delivered to the jobsite in unopened new containers bearing the manufacturer's original label. All materials will be stacked in a neat and orderly fashion by type and component. Empty containers will be neatly stacked for count verification by the designated project inspector. Containers may not be removed from the project without the approval of the inspector.

Fabric materials must be covered and protected from the weather until ready for installation. Fabric must remain dry prior to and during installation.

1.6 Application of coatings shall not take place if threatening weather prevails. Caution should be demonstrated when the dew point approaches 5 degrees of the existing temperature.

0 MATERIALS

2.1 Substrate Primer
A primer may be recommended for one or more of the following reasons: To penetrate porosity, tie-up loose materials, block moisture, and provide maximum adhesion to the subsequent topcoat.

Primer is to be selected on the basis of substrate:

TABLE 1

SURFACE/SUBSTRATE	PRIMER RECOMMENDATION
Earth	None. A supporting geotextile fabric is used. See Table 2.
Concrete, Masonry	Futura-Bond 307 or Futura-Bond 502
Steel	Futura-Bond 300
PVC Linings	Futura-Bond 313
Other Sheet Lining Systems	Consult Futura

NOTE: The application instructions on the data sheet for each primer are to be followed particularly in relation to application and recoat schedules.

.2 Fabric Selection
Selection of the fabric for the membrane depends on the type and condition of the substrate and on the end use of the system. Many substrates such as mild steel or concrete may not require any fabric. For geomembrane linings or environmental covers the following may be used as a guide.

TABLE 2

TYPE OF SERVICE	SUPPLIER	GRADE (WEIGHT OZS/SQ. YARD)	MAX. ROLL WIDTH IN FEET	MIN. THICKNESS OF GEOTHANE 520/5020
Light Duty	Hoechst Celanese(1)	Trevira 1112 (3.4 oz)	15	35 mils
Heavy Duty	Hoechst Celanese(1)	Trevira 1125 (7.1 oz)	15	50 mils
	Phillips (2)	Rufon E-6-N (6.0 oz)	15	50 mils

(1) Hoechst Celanese Corp., P.O. Box 5887, Spartanburg, SC 29304
(2) Phillips Fiber Corp., Box 66, Greenville, SC 29602

Where animals may cause damage to the memorane, the Geothane 520/5020 thickness should be increased by 50% and the exposed areas covered with a layer of soil or river sand for additional protection.

2.3 The protective waterproofing topcoat shall consist of a two component, elastomeric membrane and shall be either Geothane 520 or Geothane 5020. It shall be manufactured by Futura Coatings, Inc., St. Louis, MO and shall conform in every respect to the following physical properties:

PHYSICAL PROPERTIES	TEST METHOD	TYPICAL RESULTS Unsupported 520	Unsupported 5020	Supported 520	Supported 5020
Solids Content	Calculated	100%	100%	Consult Futura for current information. Different fabric and variations in weight will produce different values	
Tensile Strength	ASTM D-412 (Die C, AT 20 in./min.)	800 PSI	1500 PSI		
Elongation at 77°F (25°C)	ASTM D-412 (Die C, at 20 in./min.)	300%	320%		
Tear Resistance	ASTM D-1938 Split Tear	50 ± 5 PLI	85 ± 5 PLI		
Low Temperature Flexibility	ASTM D-1737, 1/2" mandrel bend at -55°F (-47°C)	Passes	Passes		
High Temperature Resistance	ASTM D-573 Continuous	200°F	200°F		
	Intermittent	250°F	275°F		
Abrasion Resistance	ASTM C-501 CS-17 wheel 1000 rev., 1000 gr. weight	23 mg. loss	21 mg. loss		
Weatherability	ASTM G-23 (QUV Weathering)	After 2000 hours of exposure There was no evidence of checking, cracking, or loss of flexibility			

3.0 SURFACE PREPARATION

3.1 Earthen

The basin shall be excavated to required dimensions with smooth compacted surfaces. Slopes should preferably be no steeper than 4:1, especially if the liner will be covered with a layer of earth or other material. If space is limited, a slope as steep as 3:1 is acceptable for exposed memoranes; however, the danger of earth instability and sliding under the liner is increased.

All surfaces in contact with the liner must be free of sharp stones, sticks, and other debris that can

ncture or tear the liner. This may mean that earth removal, sifting and replacement will be required to ure proper surface conditions. A layer of sand or other fine material can be used if the native soil is suitable. Sterililze areas of potentially harmful plant life.

A 12 by 18 inch anchor trench around the perimeter of the excavation is required to secure the liner. If the excavation is to contain liquid, this anchor trench must be above the water line.

See Appendix 2 for typical design.

3.2 CONCRETE

Any surface contamination of dirt, oil, or grease shall be removed by scrubbing with a power broom, scraping, solvent wiping, washing and/or brush blasting.

If specified, surfaces shall then be acid-etched with a 15% solution of muriatic acid to remove laitances and impurities. After foaming action has stopped, the surface must be rinsed with copious quantities of water.

All surfaces shall be thoroughly clean and dry prior to priming.

The specified primer shall be applied according to manufacturer's specifications.

Any expansion joints or stress cracks shall be properly prepared and filled with Futura-Caulk 515. Consult data sheet on caulking for complete application information.

After has cured, Geothane 520/5020 shall be applied according to specifications.

3 STEEL

Welds shall be inspected and weld spatter removed with a grinding tool. Steel surfaces are to be sandblasted to white metal (SSPC-SP5). The anchor pattern shall have a 3-4 mil profile. Profile to be determined by a Zormco Model 101/45 Roughness Gauge or equal. Particular attention shall be given to welds, inside corners, and pockets to insure thorough cleaning. All surfaces shall be completely free of oil, grease, dirt, rust scale, and foreign matter. The cleaned surface shall have a gray-white, uniform metallic color and each square inch of surface shall be free of all visible residues, discolorations, staining, mill scale, rust, and weld spatter. Remove all dust and grit by vacuuming the surface. Avoid touching the surface with hands, contaminated rags, or dirty clothing. The primer must be applied immediately after surface preparation or before humidity and temperature cause a rust bloom to form on the surface. If rust bloom should occur, the steel surface must be reblasted to original white metal appearance. The specified primer shall be applied according to manufacturer's specifications. Particular care shall be taken to follow "Recoat Schedule" indicated for the specific primer used. After primer has cured, Geothane 520/5020 shall be applied according to specification.

3.4 OTHER SUBSTRATES

Consult Futura for specific recommendation when bonding to surfaces such as PVC, Hypalon, CPE, etc.

4.0 LINER INSTALLATION

4.1 The fabric rolls shall remain covered and protected from weather until ready for installation. Only fabric panels for each day's spraying shall be spread.

4.2 The fabric panels shall be overlapped 6 inches and anchored in place. See Appendix 3 for anchoring method. Care should be taken that the fabric is positioned to conform to subgrade irregularities without being so taut as to place undue stress on the liner. Excessive wrinkles must be avoided. Steps shall be taken to avoid more than three layers of fabric in any area. See Appendix 4 for detail of coating application method used at the overlap area. Fabric extending beyond the basin into the anchoring trench must be completely coated with Geothane 520/5020 to minimum recommended film thickness. Air pockets are

not acceptable and should be eliminated while coating is still uncured. Areas of incompletely coated fabric are not acceptable.

For estimating purposes, calculate the coating thickness at the lap areas to be double the normal recommended film thickness.

Due to its rapid cure, Geothane 5020 is not recommended for spraying of lap areas. Geothane 520 provides adequate working time and needed wetting of fabric.

At the end of the workday, approximately two feet of fabric shall be left uncoated to form a joint for the following day's work.

See complete data sheet on Geothane 520/5020 for recoat and final cure schedules.

4.3 Smoking shall not be allowed on liner and footwear may only be soft, rubber soled shoes.

4.4 Contractor shall take precautions to protect liner during any subsequent back-filling operation.

4.5 In earth excavations installation of liner over organic waste or other decomposing material should be avoided due to gas development under liner. If the liner must be installed where gassing is a concern, a vent system should be installed. One method of venting is to slope the bottom of the excavation upward toward the sides. This allows rising gas to flow to the edge of the membrane where it escapes through vent flaps placed above the waterline on the slope. A 4 to 6 inch base of loose fill may be used under membrane to facilitate gas migration. Typically simple flap vents placed at 50 foot intervals are used. See Appendix 5 for typical design.

5.0 ENVIRONMENTAL COVER INSTALLATION

Environmental covers can be assembled on the containment structure or on an adjacent flat area free of sharp objects or irregularities that can damage the membrane. Assembly instructions are the same as liner instructions earlier discussed and as available in Geothane 520/5020 Data Sheet.

6.0 REPAIR OF SHEET LINING

6.1 Geothane 520 is an excellent patch and repair material for damaged PVC and other plastic/rubber sheet linings. For torn, cracked areas, as well as lengths of failed seam, use the following procedure: Power wash the repair area and solvent wipe/mop the area to be coated with a high-flash, aromatic naptha. Substrate shall be clean and dry. After applying a 25-35 mil coat of Geothane 520, lay in a section of geotextile fabric and overcoat with an additional 40-60 mils of Geothane 520. Immersion areas require a 20% increase in millage. Fabric/Coating shall run a minimum of 18 inches onto sound sheet lining. To repair certain types of sheet lining Futura may recommend the use of a primer and/or roughing up the existing liner to improve adhesion. Consult Futura for further details.

7.0 INSPECTION

7.1 Cure Test

Each coat of Geothane 520 or Geothane 5020 shall be checked in several areas for cure, after 24 hours or more at 50°F (10°C) or higher, by comparing the coating toughness with a standard test strip supplied by Futura. Sticky, uncured coating indicates an improper mixing ratio of the two coating components. Any such area shall be deemed unsatisfactory and repaired at the contractor's expense, in accordance with Futura's instructions.

7.2 Following project completion, a detailed inspection shall be conducted by either a representative of the coatings manufacturer or a private testing laboratory experienced in evaluating polyurethane coatings.

This inspection may include random slit sampling of the coating membrane to confirm thickness, adhesion, and cure. A minimum number of these samples shall be made by the inspector. Sample areas shall be repaired with new fabric and coating at contractor's expense.

Visual inspection shall confirm adherence to good detail practices at projections, trenches, laps, as well surface texture.

###

This guide provides general instructions for the installation of Futura liners and covers. However, the responsibility for proper liner or cover installation lies with the installer or purchaser and not with Futura Coatings. Although we cannot be responsible for the manner of installation, we wish to provide any assistance you require to complete your installation successfully.

CHEMICAL RESISTANCE OF MEMBRANE LINING SYST

	520	5020
ACIDS		
5% ACETIC ACID	3	3
5% HYDROCHLORIC ACID	3	3
10% HYDROCHLORIC ACID	3	2
35% HYDROCHLORIC ACID	1	1
5% SULFURIC ACID	3	3
25% SULFURIC ACID	3	2
50% SULFURIC ACID	3	2
80% SULFURIC ACID	1	0
5% NITRIC ACID	3	3
20% NITRIC ACID	2	1
5% PHOSPHORIC ACID	3	3
20% PHOSPHORIC ACID	3	3
85% PHOSPHORIC ACID	1	3
10% OXALIC ACID	3	1
ALKALI		
15% SODIUM HYDROXIDE	3	3
50% SODIUM HYDROXIDE	3	3
10% AMMONIA HYDROXIDE	3	3
25% AMMONIA HYDROXIDE	3	3
SALTS		
50% AMMONIA NITRATE	3	3
50% AMMONIA SULFATE	3	3
10% SODIUM CHLORIDE	3	3
50% POTASSIUM NITRATE	3	3
SOLVENTS		
ACETONE, MEK	0	0
BUTANOL	0	3
ETHANOL	0	2
XYLOL, TOLUOL	0	3
MINERAL SPIRITS	0	3
MISCELLANEOUS		
SODIUM HYPOCHLORITE	3	3
COOKING OIL	3	3
MOTOR OIL	3	3
WATER	3	3
GASOLINE	1	3
BRINE	3	3

0 Do not recommend exposure
1 Short term exposure (poor resistance)
2 Moderate exposure
3 Long term exposure (Room temperature test fo 30 days)

APPENDIX 3

Detail of Fabric Overlap

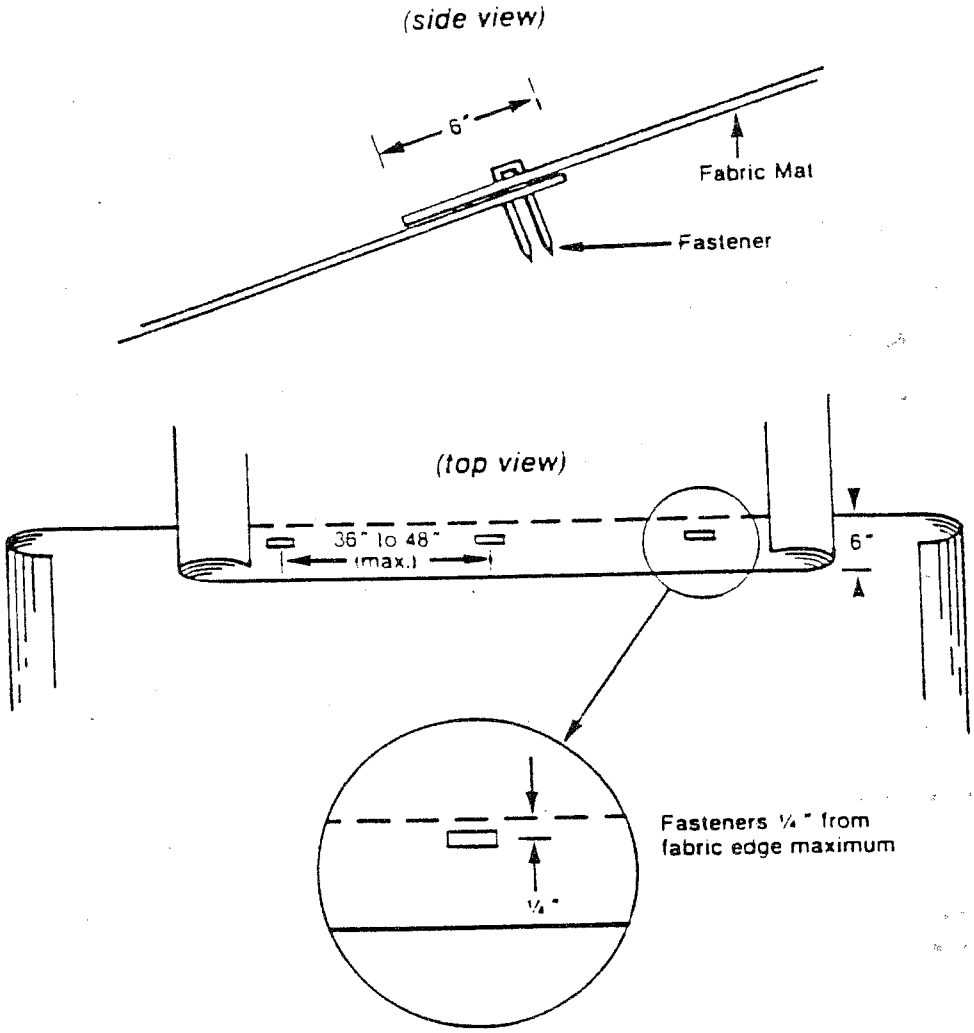

APPENDIX 4

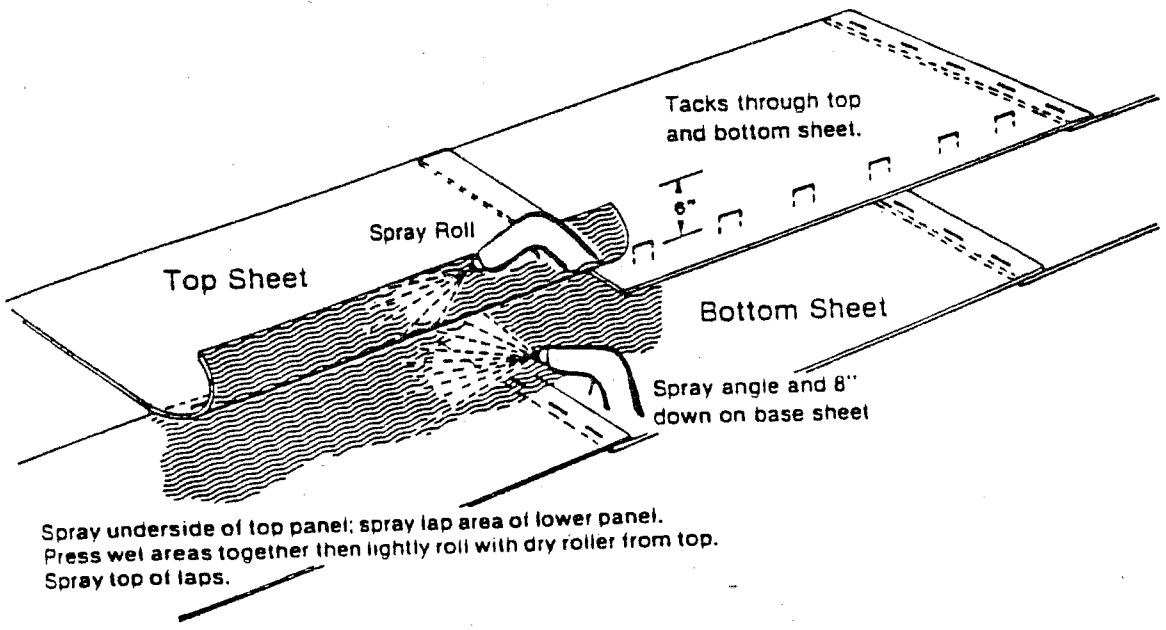

Anchor Trench Detail

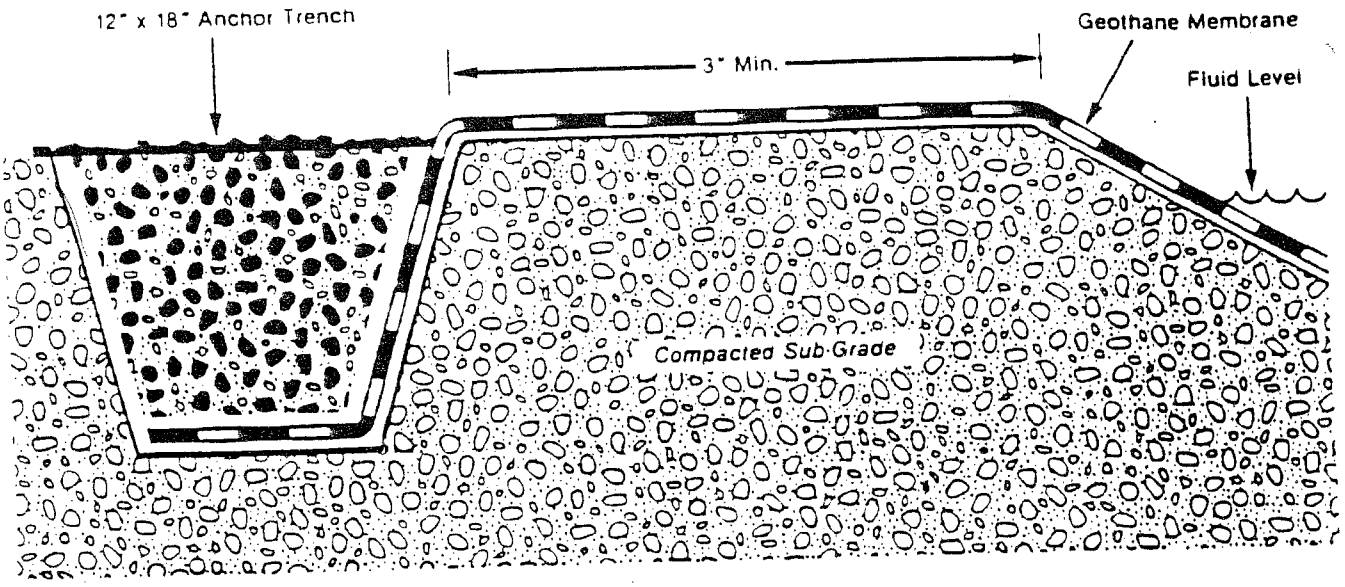

APPENDIX 5

Vent Detail

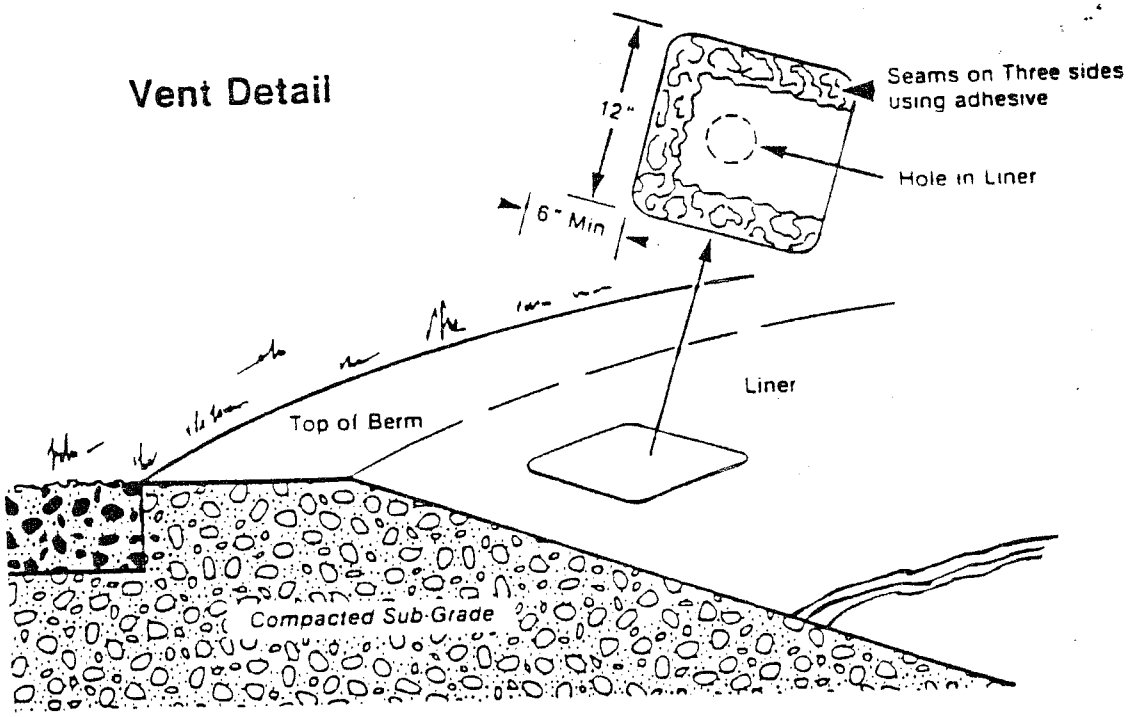

WHERE URETHANE COATINGS
TECHNOLOGY IS CREATED

FUTURA COATINGS INC

9200 LATTY AVENUE, ST. LOUIS, MISSOURI 63042

PHONE (314) 521-4100

FAX (314) 521-7255

TWX 910-760-1622

880601

APPENDIX D-10, DATA SHEET #7

SONNEBORN SONOLASTIC SYSTEM

D-10

Sonneborn

SONOLASTIC®

NP 1

07900 SEALANTS elastomeric, one component

DESCRIPTION

Sonolastic NP 1 is a one component urethane non-sag gun grade sealant designed for a wide range of sealing and caulking applications in active exterior joints. Sonolastic NP 1 requires no mixing, is self-priming and with appropriate surface preparation, it can bond to many materials such as concrete and masonry, aluminum and wood without a primer.*

Sonolastic NP 1, after it has cured, produces a flexible long lasting joint, with extraordinary adhesion, cohesion and elasticity that resists deterioration caused by weather, stress, movement, water and many chemicals.

*See section on Priming on the following page.

COMPLIANCE

Sonolastic NP 1 complies with Federal Specification TT-S-00230C, Type II, Class A; ASTM-C-920, Type S, Grade NS, Class 25, use NT, M and A. Canadian Specification CAN/CGSB2-19.13-M87, Classifications C-2-40-A-N and MCG-2-25-A-N. CGSB Qualification No. 81026. It has been approved by the United States Department of Agriculture (USDA) for use in meat and poultry areas.

COLORS

A complete line of standard colors are available. Colors include white, off-white, limestone, stone, tan, aluminum gray, medium bronze, special bronze, redwood tan and black.

USE

Sonolastic NP 1 is used to provide a positive seal for active joints. Among the many and varied applications for new construction and remedial work are:

- Expansion wall joints
- Curtain wall construction
- Panel walls
- Precast units
- Aluminum/wood window frames

Typical applications include exterior perimeter sealing of curtain wall panel, caulking and sealing fascia, parapets and other structural components. Its use is indicated wherever a high performance, one component sealant is dictated.

Sonolastic NP 1 is a gun grade low modulus sealant, which will give maximum performance if joints are properly placed and designed and if joint surfaces are structurally sound and clean.

COVERAGE

The following table indicates the number of linear feet filled by one gallon of Sonolastic NP 1 for joints of various widths and depths.

LINEAR FEET PER GALLON

Joint Depth (Inches)	Joint Width (Inches) ¼	⅜	½	⅝	¾	⅞	1
¼	308	205	154	122			
⅜				82	68	58	51
½					51	44	38

LINEAR METERS PER GALLON

Joint Depth (mm)	Joint Width (mm) 6.4	9.5	12.7	15.9	19.0	22.2	25.4
6.4	93.9	62.5	46.9	37.2			
9.5				25.0	20.7	17.7	15.5
12.7					15.5	13.4	11.6

NOTE: 12 cartridges are approximately one gallon.

JOINT DESIGN

To a large extent, the design of the joint depends upon a variety of factors such as the maximum expansion and contraction of the surface materials due to thermal change. Where possible, Sonolastic NP 1 should be applied when the joint is at its median opening so as to obtain the greatest efficiency with subsequent joint movement.

The dimensions of the joint to be sealed must be established in relation to service conditions. The number of joints and joint width should be designed not to exceed ±25% maximum movement. The joint width may be determined by calculating the change in size of the joint between the high and low temperature extremes and multiplying the change by a factor of 4.

For example, if it is determined that a joint will open and close ¼" between temperature extremes, the joint width should be four times the ¼" or 1" minimum. The depth of the sealant should be ½ the width of the joint, with a maximum depth of ½" and a minimum of ¼". Minimum joint width should be ¼". (See Table 1 below.)

Table 1. Joint Width and Sealant Depth

Joint Width (inches)	(millimeters)	Sealant Depth at Midpoint (inches)	(millimeters)
¼ to ½	(6.4 to 12.7)	¼	(6.4)
½ to 1	(12.7 to 25.4)	¼ to ½	(9.5 to 12.7)
1 to 2	(25.4 to 50.8)	½	(12.7)

In deep joints, the sealant depth should be controlled by the use of joint fillers or backup materials. The backup material must be non-impregnated and compressible, such as Sonofoam Backer-Rod or Sonofoam Soft Backer-Rod. Where the depth of the joint does not permit use of Sonofoam Backer-Rod, a bond breaker (polyethylene strip) must be used to prevent three point bonding. (See Figures 1A, 1B and 1C on the next page.)

SONNEBORN OCTOBER 1989 (Supersedes September 1988)

Figure 1A

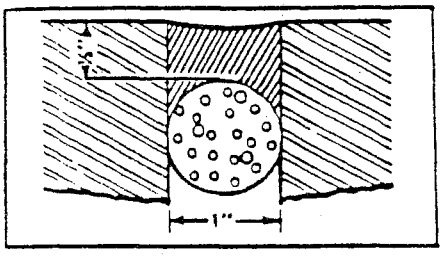

Proper Depth Control

Figure 1B

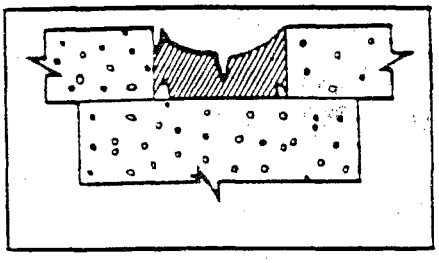

Joints without Bond Breaker

Figure 1C

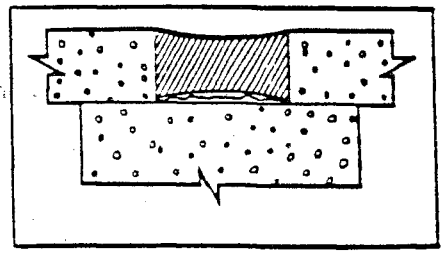

Joints with Bond Breaker

The effect on the sealant with and without bond breakers is illustrated in Figures 1B and 1C.

To maintain recommended sealant depth, Sonofoam Backer-Rod is installed by compressing and rolling it into joint channel without stretching lengthwise. Backer-Rod should be about ⅛" (3.2 mm) larger in diameter than the width of the joint to allow for compression. Sonofoam Soft Backer-Rod should be approximately 25% larger in diameter than the joint width. Sonofoam becomes an integral part of the joint -sealant does not adhere and no separate bond breaker is required.

INSTALLATION

Preparatory Work (Cleaning): Surface to receive sealant must be structurally sound, dry, clean, free of dirt, moisture, loose particles, oil, grease, asphalt, tar, paint, wax, rust, waterproofings, curing and parting compounds, membrane materials, etc.

Masonry: Concrete, stone and other masonry must be cleaned where necessary by grinding, sandblasting or wire brushing to expose sound surface free of contamination and laitance.

Wood and Painted Wood: Cut back weathered or treated surfaces or dry rot until you reach clean, sound wood. Sonolastic NP 1 will adhere to most new and old, dry, oil-free wood. Whenever possible, paint should be scraped away to bare wood, although Sonolastic NP 1 will adhere to most paints. If removal is impractical, a test application should be made to determine proper adhesion. Consult Sonneborn Technical Services for wood substrates that are coated or have a baked-on enamel or plastic finish.

Metal: Scale, rust and coatings must be removed to expose bright metal. Protective coatings should be removed with solvent and all chemical residue or film removed. Aluminum window frames are frequently coated with a clear lacquer (usually of acrylic or methacrylate composition). Such lacquer must be removed prior to the application of Sonolastic NP 1. Lacquer is best removed by wiping the window frames with a clean cloth moistened with methyl ethyl ketone (MEK).

In addition to lacquer coatings referred to above, a variety of other protective coatings or finishes are frequently specified. Such finishes could interfere with the bond (adhesion) of the sealant. When a protective coating has been specified on metal it is recommended that Sonneborn Technical Service be contacted prior to sealant application.

Priming: While Sonolastic NP 1 is generally considered a non-priming sealant, special circumstances or substrates (i.e. certain protective coatings on aluminum) may require the use of primer. It is the responsibility of the user to check the adhesion of the cured sealant on typical test joints at the project site prior to and during the application of the sealant. Consult Sonneborn Technical Service for additional information as necessary. For water immersion conditions, priming is required on concrete and most other substrates. Where water immersion is anticipated use Primer No. 733.

Full strength primer is applied with a brush or clean cloth. A light uniform coating is sufficient for most surfaces; however, porous surfaces require a somewhat heavier but not excessive coat. Allow primer to dry prior to application of sealant.

Depending on temperature and humidity, primer will be tack-free in 15-30 minutes and ready for sealant. Priming and sealing must be done on the same work day. Consult Sonneborn Technical Service for information regarding primers on other surfaces.

Important: Never use filler impregnated with oil, asphalt, tar or any migratory saturant. Oil base caulking compounds and butyl caulking compounds should not come in contact with Sonolastic NP 1.

APPLICATION

Sonolastic NP 1 is a single component (one part) system and comes ready-to-use. It is applied by professional caulking gun loaded at the job site or directly from the catridge. Sonolastic NP 1 maintains excellent gunnability over a broad temperature range and is readily gunnable even at low temperatures. Joints should be filled from the deepest point to the surface by holding a properly sized nozzle against the back of the joint.

Proper tooling assures the correct bead configuration and a neat joint. Equally important, it assures maximum adhesion to the sides of the joint. "Dry" tooling is recommended, but if necessary, dampen tool with water or Reducer 990. DO NOT use soapy water to tool. Avoid overtooling of sealant.

Application-Temperature: Field experience recommends that all caulking and sealing should be performed when temperatures are above 40°F (5°C) in order to avoid application to moisture laden surfaces. Moisture on substrates will adversely affect adhesion.

Application may proceed as low as 20°F (-6°C) if there is complete assurance that substrates to receive NP 1 are completely dry, free of moisture and clean as described elsewhere herein.

Precautions: Prior to use, unopened containers should be protected from heat and direct sunshine. In cool or cold weather, store containers where temperature approximates 75°F (25°C) for at least 24 hours before using in order to facilitate application. Containers should not be opened until necessary preparatory work has been completed.

CURE RATE

Cure of Sonolastic NP 1 will vary with temperature and humidity. Under nominal conditions (75°F [25°C] and 50% R.H.). Sonolastic NP 1 will have a heavy skin overnight to 24 hours. In a typical joint of ½" width by ¼" depth, Sonolastic NP 1 is functional in three days and approximates full cure in about a week.

BACKING MATERIALS

In deep joints, sealant depth should be controlled with Sonofoam Backer-Rod. Other caulks should not be used as fillers. Sonofoam Backer-Rod should not be primed. Car should be taken to insure that Backer-Rod is not punctured.

CLEAN-UP

Immediately after use and before sealant has cured, equipment may be cleaned with xylene or Reducer 990. The cured sealant may be removed by cutting with a sharp edged tool; thin films removed by abrading.

PACKAGING

Sonolastic NP 1 is available in 1/12 gallon cartridges (0.32 liters), 30 cartridges to a carton.

SHELF LIFE

Sonolastic NP 1, one year at 75°F (25°C) temperature and 50% relative humidity.

SUGGESTED SPECIFICATION

The following short form guide specification is provided for the convenience of the specification writer and user. It covers the general procedures necessary for proper installation of Sonolastic NP 1.

Scope: Furnish and install as specified. All joints requiring sealant must be inspected by the contractor. It is the responsibility of the applicator to install the sealant in a manner which insures the optimum performance of materials used.

Materials: Sealant material shall be 100% urethane base Sonolastic NP 1 as manufactured by Sonneborn. Colors are to be selected by owner/architect. Material shall comply with Federal Specification TT-S-00230C, Type II, Class A; ASTM C-920, Type S, Grade NS, Class 25, Use NT, M, A. Backup material must be used to control the depth of sealant and shall be Sonofoam Backer-Rod or Sonofoam Soft Backer-Rod as supplied by Sonneborn. Material shall be stored in strict accordance with the manufacturer's instructions.

Preparation: Joint surfaces must be structurally sound, dry, clean, free of dirt, moisture, loose particles, oil, grease, asphalt, tar, paint, wax, rust, release agents, etc. Sonofoam Backer-Rod shall be installed so as to maintain a suitable width to depth ratio as recommended by the manufacturer. Minimum joint width shall be ¼". Minimum joint depth shall be ¼".

Priming: For water immersion conditions, priming is required. Use Sonneborn Primer No. 733.

Sealant Application: Application shall be by cartridge-type gun, or air pressure equipment. All caulking and sealing shall be performed when temperatures are above 40°F in order to avoid application to moisture laden surfaces. Sealant should be tooled immediately to assure maximum adhesion and neat joint appearance.

Clean-up: Exposed surfaces shall be cleaned, free of excess sealant or other soiling due to sealing operations. Surfaces shall be cleaned as work progresses and before sealant begins to cure.

SUMMARY OF TYPICAL CHARACTERISTICS OF CURED SEALANT

PROPERTY	TEST METHOD	VALUE (Average)
Tensile Strength	ASTM D412	200 psi
Elongation (Ultimate)	ASTM D412	1000%
Hardness - Shore A	Shore Durometer	33±3
Shrinkage		Nil
Weatherometer	Atlas Xenon Arc	No elastomeric property change after 3000 hou
Low Temperature Flexibility	ASTM D746	-40°F
Service Temperature Range		-40°F to 180°F
Expected Life		Up to 20 years

WARNING

CONTAINS: chlorinated paraffin, toluene diisocyanate and aliphatic hydrocarbon solvent.

May cause injury to eyes following repeated or prolonged contact. May cause skin irritation. Do not get on skin or in eyes. If contact occurs, flush affected areas thoroughly with water. Remove and wash contaminated clothing before reuse.

May cause respiratory irritation or intoxication with headache, nausea and central nervous system depression. Chronic inhalation of vapors may cause injury to the kidneys or central nervous system. Avoid inhalation of vapor or mist. If inhaled, remove to fresh air. If breathing is difficult, give oxygen. If not breathing, administer artificial respiration. Swallowing liquid may cause irritation to mouth and throat.

Liquid aspirated into lungs may cause severe pulmonary injury. Do not take internally. If ingested, DO NOT induce vomiting.

SEEK MEDICAL ATTENTION FOR ALL OVEREXPOSURES.
USE ONLY WITH ADEQUATE VENTILATION.
KEEP OUT OF REACH OF CHILDREN.
STORE AWAY FROM SOURCES OF IGNITION.

LIMITED WARRANTY NOTICE

Every reasonable effort is made to apply ChemRex Inc. exacting standards both in the manufacture of our products and in the information which we issue concerning these products and their use. We warrant our products to be of good quality and will replace or, at our election, refund the purchase price of any products proved defective. Satisfactory results depend not only upon quality products but also upon many factors beyond our control. Therefore, except for such replacement or refund, CHEMREX INC. MAKES NO WARRANTY OR GUARANTEE, EXPRESS OR IMPLIED, INCLUDING WARRANTIES OF FITNESS OR MERCHANTABILITY, RESPECTING ITS PRODUCTS, and CHEMREX INC. shall have no other liability with respect thereto. Any claim regarding product defect must be received in writing within one (1) year from the date of shipment. No claim will be considered without such written notice or after the specified time interval. User shall determine the suitability of the products for the intended use and assume all risks and liability in connection therewith. Any authorized change in the printed recommendations concerning the use of our products must bear the signature of the ChemRex Inc. Technical Services Manager.

REGIONAL FIELD OFFICES

Midwest
415 East 16th Street
Chicago Heights, IL 60411
708/757-3300

Northeast
57-46 Flushing Avenue
Maspeth, NY 11378
718/456-8101

Southeast
2170 DeFoor Hills Rd. NW
Atlanta, GA 30318
404/355-6767

Southwest
3870 West 11th Street
Houston, TX 77055
713/869-1446

Western
2359 Lincoln Avenue
Hayward, CA 94545
415/889-9899

International Operations
7711 Computer Avenue
Minneapolis, MN 55435
612/835-3434
FAX: 612/835-2498

ALL DISTRIBUTION CENTERS
1-800-433-9517
TECHNICAL SERVICE:
1-800-CHEMREX
FAX: 612/835-3039

ChemRex Inc.
Sonneborn Building Products
7711 Computer Avenue • Minneapolis, MN 55435 • 612/835-3434
Regional Warehouses in: Chicago, IL; Houston, TX; Maspeth, NY; Atlanta, GA; Hayward, CA. **Manufacturing Plants in:** Chicago, IL; Minneapolis MN; Pottstown, PA; Commerce City, CO.

Sonneborn

SONOFOAM CLOSED CELL (CC) BACKER-ROD

JOINT FILLER AND BACKING FOR ELASTOMERIC SEALANTS (GRAY)

DESCRIPTION

Sonofoam Closed Cell (CC) Backer-Rod is a resilient polyethylene foam, designed for use with cold applied joint sealants and becomes an integral part of the joint sealing system. It is extruded to various diameters to accommodate a range of joint widths. Its use as a back-up material provides the proper shaping of the sealant without bonding to the Sonofoam, permitting the sealant to stretch and recover with joint movement.

USE

Sonofoam is the ideal back-up material for cold applied sealants where a joint filler is necessary prior to application of the sealants. Joint fillers have two major functions: (1) to control the depth of the sealant in proper relation to joint width; and (2) to provide a backing against which the sealant is applied and filling the joint from the bottom forcing the sealant to the sides of the joint. Among the many types of joints in which Sonofoam is used are:

- Metal Panels
- Pre-Cast Panels
- Expansion Joints
- Perimeter of Windows
- Perimeter of Door Frames
- Coping Joints
- Glazing Joints
- Floor, Deck Joints

ADVANTAGES

1. Lightweight
2. Resilient - accepts joint movement.
3. Closed cell structure - low moisture absorption.
4. Non-impregnated, non-staining and non-bleeding.
5. Inert and compatible with cold applied sealants.
6. Round - gives the proper joint sealant configuration.
7. No bond breaker required. Sealants will not adhere.
8. Economical
9. Installs easily and quickly.

INSTALLATION

Sonofoam must be held in the joint under compression at the time of installation. The diameter of the rod should be 1/8" larger than the width of the joint for joint widths up to 3/4", for 3/4" wide joints use 1" diameter rod.

Sonofoam Backer-Rod may be easily installed with the use of a blunt probe or a plain faced roller, forcing the rod to the desired depth. A template or roller gauge may be used as a guide to control the depth at which the rod is placed. Do not puncture, fold or crease backer-rod. Follow sealant manufacturer's suggestions for joint sealant width and depth ratio.

JOINT SEALING

Follow suggestions for joint sealant application as directed by sealant manufacturer. Where priming of the joint is necessary, primer should be applied to the joint surfaces after Sonofoam is placed in the joint. Do not prime Sonofoam.

PACKAGING

Common sizes of Sonofoam Backer-Rod are wound on reels and packaged in cartons. Approximate weight 15 lb./carton. 1½" and 2" in 7 ft. length packaged in cartons. Approximate weight 35 lbs./carton.

TYPICAL PROPERTIES

Composition	Extruded closed cell, polyethylene foam
Color	Gray
Odor	None
Water Absorption	0.5% by volume
Compression-Deflection	8 psi @ 25%
Tensile Strength	25 psi

ESTIMATING SONOFOAM BACKER-ROD REQUIREMENTS

Joint Width	Rod Diameter	Sealant Depth	Footage per Carton
3/16" or less	1/4"	1/4"	6,400*
1/4"	3/8"	1/4"	3,600**
3/8"	1/2"	1/4"	2,500
1/2"	5/8"	1/4"	1,550
5/8"	3/4"	1/4"	1,100
3/4"	1"	3/8"	550
1"	1 ¼"	1/2"	400
1 ⅛"	1 ½"	—	770***
1 ⅝"	2"	—	525***

*Twin Packs 3,200 ft./reel.
**Twin packs 1,800 ft./reel.
***Supplied in 7 ft. length.

SONNEBORN
JUNE 1989
(Supersedes April 1989)

LIMITED WARRANTY NOTICE

Every reasonable effort is made to apply ChemRex Inc. exacting standards both in the manufacture of our products and in the information which we issue concerning these products and their use. We warrant our products to be of good quality and will replace or, at our election, refund the purchase price of any products proved defective. Satisfactory results depend not only upon quality products but also upon many factors beyond our control. Therefore, except for such replacement or refund CHEMREX INC. MAKES NO WARRANTY OR GUARANTEE, EXPRESS OR IMPLIED, INCLUDING WARRANTIES OF FITNESS OR MERCHANTABILITY, RESPECTING ITS PRODUCTS, and CHEMREX INC. shall have no other liability with respect thereto. Any claim regarding product defect must be received in writing within one (1) year from the date of shipment. No claim will be considered without such written notice or after the specified time interval. User shall determine the suitability of the products for the intended use and assume all risks and liability in connection therewith. Any authorized change in the printed recommendations concerning the use of our products must bear the signature of the ChemRex Inc. Technical Manager.

REGIONAL FIELD OFFICES

Midwest
415 East 16th Street
Chicago Heights, IL 60411
312/757-3300

Northeast
57-46 Flushing Avenue
Maspeth, NY 11378
718/456-8101

Southeast
2170 DeFoor Hills Rd. NW
Atlanta, GA 30318
404/355-6767

Southwest
3870 West 11th Street
Houston, TX 77055
713/869-1446

Western
2359 Lincoln Avenue
Hayward, CA 94545
415/889-9899

International Operations
7711 Computer Avenue
Minneapolis, MN 55435
612/835-3434
FAX: 612/835-2498

ChemRex Inc.
Sonneborn Building Products
7711 Computer Avenue • Minneapolis, MN 55435 • 612/835-3434
Regional Warehouses in: Chicago, IL; Houston, TX; Maspeth, NY; Atlanta, GA; Hayward, CA. **Manufacturing Plants in:** Chicago, IL; Minneapolis MN; Pottstown, PA; Commerce City, CO.

APPENDIX D-10, DATA SHEET #8

COATING SPECIFICATIONS

Product Data

CENTRON 270

Description:

Moisture cured Polyurethane Aromatic, A.S.T.M. Type II

Features:

* Single package, ready to use
* High gloss, transparent
* Outstanding abrasion resistance
* Excellent, flexibility and resilience
* Fast dry, low temperature cure 15°F
* Outstanding chemical resistance

Uses:

* Concrete Floor Sealer
* Wood Floor Finish
* Abrasion Resistant Barrier
* Protective Glaze Finish

Product Credentials:

* A.S.T.M. Type II, Clear
* Complies Chapt. 121.2514 F.D.A. for use in food plants as non-toxic when dry and fully cured.

Relevant Publications:

* Centron Concrete Floor Sealer
* Centron Polyurethane Sealers
* Centron 270 Series Technical Publication
* Centron 270 M.S.D.S. Data Sheet
* Centron 270 Test Data

Physical Properties:

* Color:	Waterwhite Clear
* Solids:	30% by volume
* W.P.G.:	7.90 lbs.
* Viscosity:	44 Ku @ 77°F
* Flash Point:	81°F T.C.C.
* Package:	Single
* Container:	5 gallon, 55 gallon drum

Storage and Handling:

Store inside a clean, dry room zoned for flammable products; temp. 40°F-90°F. Use ground clamps and avoid sparks or electrical discharge.
Shelf Life: 6 months from date manufacture

Solvents and Diluents:

* Thinning and Reduction: Use Centron 270 Solvent P.U.G.
* Clean up: Use Xylol or M.E.K.

Accessories:

* Centron 270 Catalyst
* Centron 200-430 Surfactant
* Centron 270 Retard Solvent

Basic System:

* General Service

First Coat:	30% reduction Centron 270
Second Coat:	Full strength Centron 270 Roller Application

* Maximum Gloss, Smooth Surface

First Coat:	30% reduction Centron 270
Second Coat:	30% reduction Centron 270
Third Coat:	30% reduction Centron 270 Lambswool Application

Slip Resistance:

Flat glossy floors are slippery when wet. Aluminum oxide, grit, or silica sand may be broadcast into wet Centron 270. Remove surplus and topcoat within 24 hours.

TRIPLE G COATINGS INC warrants that the Product shall conform to its standard specifications in effect at time of shipment. TRIPLE G COATINGS INC MAKES NO OTHER WARRANTY, EXPRESS OR IMPLIED, WITH RESPECT TO THE PRODUCT AND DISCLAIMS THE IMPLIED WARRANTIES OF MERCHANTABILITY AND OF FITNESS FOR A PARTICULAR PURPOSE. Any liability of TRIPLE G COATINGS INC arising out of the sale, use or application of its Product shall be limited to replacement of the Product used.

TRIPLE G COATINGS INC. 1774 [illegible] Street Riverton, N.J. 08077

These instructions are not intended to show product recommendations for specific service. They are issued as an aid in determining correct surface preparation, mixing instructions and application procedure. It is assumed that the proper product recommendations have been made. These instructions should be followed closely to obtain the maximum service from the materials.

To the best of our knowledge the technical data contained herein are true and accurate at the date of issuance and are subject to change without prior notice. User must contact TRIPLE G COATINGS INC. to verify correctness before specifying or ordering. No guarantee of accuracy is given or implied. We guarantee our products to conform to TRIPLE G COATINGS INC. quality control. We assume no responsibility for coverage, performance or injuries resulting from use. Liability if any is limited to replacement of products. Prices and cost data if shown are subject to change without prior notice. NO OTHER WARRANTY OR GUARANTEE OR ANY KIND IS MADE BY THE SELLER, EXPRESS OR IMPLIED, STATUTORY BY OPERATION OR LAW OR OTHERWISE, INCLUDING MERCHANTABILITY AND FITNESS FOR A PARTICULAR PURPOSE.

Preparation Methods: Refer to individual job specification

* Steel: Not recommended, use Centron 201, 332 Primers.
* Concrete: Sandblast, vacuum blast, acid etch, degrease, detergent and/or solvent clean and dry. Prepared surface should equal medium sandpaper.
* Wood: Power sand, degrease, strip and remove all existing finish, stains and unsound wood.
* Basic: The surface must be structurally sound, clean, dry, and free of intervening barriers to block or interfere with penetration and adhesion.
* Old Paint: Sand, degrease, clean and dry. Test apply and inspect for solvent attack, lifting and wrinkling.

Application Methods: Refer to individual job specification

* Brush: Natural fiber or solvent resistant synthetic.
* Roller: Short-medium nap roller, solvent resistant.
* Lambswool: Special applicator, solvent reduce 30%, thin coats.
* Spray: Air pressure or airless spray. Refer to publication.

Application Parameters

* Environment: 15°F-100°F at 90%-20% R.H.
* Coverage: 480 mil ft./gal.
  Recommended Coverage: 350-400 sq. ft./gal., per coat. 4 mils wet and 1.2 mils dry film thickness.
* Mix Ratio: N/A ready to use.
* Induction Time: N/A
* Dry Time: Laboratory determined at 77°F and 50% R.H.
  Tack Free: 2 hours; nail hard: 2-3 hours;
  Light Duty: 12 hours
  Recoat Time: 2-3 hours, never exceed 24 hours.
  Final cure for service: 5-7 days.
* Repairs: Clean, degrease and scuff sand till dull. Solvent wipe and reapply with first coat reduced 30% with Centron 270 Solvent P.U.

Safety Precautions

Refer to M.S.D.S. Data Sheet
Refer to Centron M.C.U. Safety Publication
Read Project Specifications

Waste Disposal

Remove and dispose of in accordance with M.S.D.S. Data Sheet, and local, state and federal Environmental Protection Agency and Department of Environmental Protection regulations.

Appearance and Acceptance

.e cured dry finish should be smooth, glossy and hard. A minimum of surface defects, bubbles or cratering should be observed. The finish should be well bonded to the concrete floor with no delamination, peeling or voids.

CAUTION: CONTAINS FLAMMABLE SOLVENTS. [illegible] FLAMES IN CONFINED AREAS WORKMEN MUST WEAR FRESH AIRLINE RESPIRATORS. HYPERSENSITIVE PERSONS SHOULD WEAR GLOVES OR USE PROTECTIVE CREAM. ALL ELECTRIC EQUIPMENT AND INSTALLATIONS SHOULD BE MADE AND GROUNDED IN ACCORDANCE WITH THE NATIONAL ELECTRICAL CODE. IN AREAS WHERE EXPLOSION HAZARDS EXIST WORKMEN SHOULD BE REQUIRED TO USE NONFERROUS TOOLS AND TO WEAR CONDUCTIVE AND NONSPARKING SHOES.

MATERIAL SAFETY DATA SHEET

NPCA 1-82

FOR COATINGS, RESINS AND RELATED MATERIALS

Section I

MANUFACTURER'S NAME: TRIPLE G COATINGS INC.

DATE OF PREP: 7/85

STREET ADDRESS: 1714 Bannard Street

CITY, STATE AND ZIP CODE: Riverton, N.J. 08077

EMERGENCY TELEPHONE NO: 609-829-1575

INFORMATION TELEPHONE NO: 609-829-1575

CHEMICAL FAMILY: Polyurethane

MANUFACTURERS CODE IDENTIFICATION: CENTRON

TRADE NAME: CENTRON 270

Section II—HAZARDOUS INGREDIENTS

INGREDIENT	% BY WT	OCCUPATIONAL EXPOSURE LIMITS	VAPOR PRESSURE	TOXICITY DATA
Xylene	60	100 ppm	9.5 mm Hg	
Unreacted Toluene Diisocyanate	less than 1.0	0.005	0.1 mm Hg	

Section III—PHYSICAL DATA

BOILING RANGE: of Solvent 280-288°F

VAPOR DENSITY: HEAVIER X LIGHTER THAN AIR

EVAPORATION RATE: FASTER X SLOWER THAN ETHER

PERCENT VOLATILE BY VOLUME: 66

WEIGHT PER GALLON: 8.0 lbs.

Section IV—FIRE AND EXPLOSION HAZARD DATA

FLAMMABILITY CLASSIFICATION: OSHA FLAMMABLE; DOT FLAMMABLE

FLASH POINT: 77°F

LEL: 1.0%

EXTINGUISHING MEDIA

FOAM: ___ ALCOHOL FOAM: ___ CO2: X DRY CHEMICAL: X WATER FOG: ___ OTHER: ___

UNUSUAL FIRE AND EXPLOSION HAZARDS

Keep away from heat, sparks and open flame.

Section V—HEALTH HAZARD DATA

EFFECTS OF OVEREXPOSURE Inhalation - irritation of the nose, throat, and eyes; possible narcosis. May be accompanied by coughing, choking or difficult breathing. Asthma-like breathing may be delayed reaction. Causes skin and eye discomfort by defatting action. May cause lung irritation and allergic reaction.

EMERGENCY AND FIRST AID PROCEDURES Remove patient to fresh air. Remove saturated clothing and wash skin with soap and water. Flush eyes with clean water for 15 minutes - see a physician.

Section VI—REACTIVITY DATA

STABILITY UNSTABLE X STABLE CONDITIONS TO AVOID

INCOMPATIBILITY (Materials to avoid) Avoid contact with strong oxidizing agents

HAZARDOUS DECOMPOSITION PRODUCTS

Usual products of combustion - CO, CO_2, and possibly oxides of nitrogen.

HAZARDOUS POLYMERIZATION MAY OCCUR X WILL NOT OCCUR

Section VII—SPILL OR LEAK PROCEDURES

STEPS TO BE TAKEN IN CASE MATERIAL IS RELEASED OR SPILLED Remove sources of ignition. Provide ventilation and/or respiratory protection.

WASTE DISPOSAL METHOD Large spills may be picked up with non-sparking tools, small spills with absorbent material. Residues may be decontaminated with water/alcohol or ammonia solutions. Dispose of in accordance with federal state and local regulations.

Section VIII—SPECIAL PROTECTION INFORMATION

RESPIRATORY PROTECTION Approved masks or respirators for organic vapors and particulate matter as necessary. If spraying in poorly ventilated area, positive pressure air supplied masks are recommended.

VENTILATION

PROTECTIVE GLOVES Neoprene rubber

EYE PROTECTION Goggles or side shield spectacles

OTHER PROTECTIVE EQUIPMENT Eye wash station should be available.

Section IX—SPECIAL PRECAUTIONS

PRECAUTIONS TO BE TAKEN IN HANDLING AND STORING Avoid prolonged skin contact. Do not breathe spray mist. Store away from heat, sparks and open flame.

OTHER PRECAUTIONS Ground containers while pouring and limit free fall to a few inches to prevent static sparks. Emptied containers may retain hazardous properties. Do not cut or weld on or near the container.

TRIPLE G COATINGS

1714 Bannard Street
Riverton, NJ 08077
609/829-1575
TLX 244993

CENTRON 270 SPECIFICATIONS AND PERFORMANCE DATA

Physicals:

Solids:	30% by volume 40% by weight
Weight per Gallon:	7.90 lbs.
Viscosity:	44 Ku @ 77°F
Color:	Water-white clear (Gardner #1)
% Free T.D.I.:	Less than 1.0 max.
% Free M.D.I.	Less than 1.0 max.
Flash Point:	80°F T.C.C.

Film Properties:

Dry Time:	50% R.H. @ 77°F
Tack Free:	2 hours
Hard Dry:	6-8 hours
Coverage:	480 mil feet per gallon
Sward Hardness	
24 hours:	24
1 week:	26

Taber Abrasion (average weight loss, CS17 wheel, 1,000 gram weight, 1,000 cycles)

Loss:	10 mg.
Tensile Strength:	greater than 3500 psi
Elongation:	100%
Impact Resistance:	160 inch pounds
Mandrel Wrap:	passes 1/8" wrap

Product Data

CENTRON 416 CLEAR

Description:

A two part, odorless, clear, aliphatic novolac coating.

Features:

* Aliphatic Novolac Resins
* Solventless, Odorless, Non-Toxic
* Outstanding Chemical Resistance
* Flexural, Hard, Impact Resistant
* Monolithic, Non-Porous
* Water Clear, Transparent
* Variable Thickness, 4-125 mils
* Clear or Colored Quartz Matrix
* Installation at 40°F-100°F.

Uses:

* Clear, Transparent Floor Finish
* Resurfacing or Restoring Floors
* Colored Quartz Floor System
* Installation during normal working hours without toxic jeopardy
* Odorless floor coating, safe odorless repairs or recoating
* Improving worn epoxy floors
* Underlayment for Centron 280 Polyurethane Floor Systems

Product Credentials:

* Complies with F.D.A. Chapt. 121.2514 for use in food plants. Film is non-toxic when dry and fully cured.

Relevant Publications:

* Centron 416 M.S.D.S. Publication
* Centron 416 Spray Recommendation
* Centron 416 Floor Coatings

Physical Properties:

* Color: Transparent, Clear
* Solids: 100% N.V.
* W.P.G.: 9.8 lbs. mixed
* Viscosity: 85 Ku, Mixed
* Flash Point: N/A
* Package: Two Package, Part A & Part B
* Container: Kits, Total 4 Gallons
  3 Gallons of Part B +
  1 Gallon of Part A

Storage and Handling:

Store inside a clean, dry room zoned for flammable products; temp. 50°F-90°F. Use ground clamps and avoid sparks or electrical discharge.

Shelf Life:

12 months from date of manufacture.

Solvents and Diluents:

* Thinning and Reduction: Use M.E.K.
* Clean-Up: Use M.E.K.

Accessories: N/A

Basic System:

* General Concrete Floor Sealer
  Smooth Glossy
  First Coat: 4-6 mils
  Second Coat: 8-10 mils (optional)

* Textured, Slip Resistant, Colored Floor
  First Coat: 10 mils
  Non-Skid: Colored Quartz
  Second Coat: 15 mils

REV: 11/86

TRIPLE G COATINGS INC warrants that the Product shall conform to its standard specifications in effect at time of shipment. TRIPLE G COATINGS INC MAKES NO OTHER WARRANTY EXPRESS OR IMPLIED WITH RESPECT TO THE PRODUCT AND DISCLAIMS THE IMPLIED WARRANTIES OF MERCHANTABILITY AND OF FITNESS FOR A PARTICULAR PURPOSE. Any liability of TRIPLE G COATINGS INC arising out of the sale use or application of its Product shall be limited to replacement of the Product used

These instructions are not intended to show product recommendations for specific service. They are issued as an aid in determining correct surface preparation, mixing instructions and application procedure. It is assumed that the proper product recommendations have been made. These instructions should be followed closely to obtain the maximum service from the materials.

To the best of our knowledge the technical data contained herein are true and accurate at the date of issuance and are subject to change without prior notice. User must contact TRIPLE G COATINGS INC. to verify correctness before specifying or ordering. No other express or implied. We guarantee our products to conform to TRIPLE G COATINGS INC. quality control. We assume no responsibility for performance or results resulting from use. Liability, if any, is limited to replacement product. Prices and specifications subject to change without prior notice. NO OTHER WARRANTY OR GUARANTEE OF ANY KIND IS MADE BY THE SELLER EXPRESS OR IMPLIED, STATUTORY, BY OPERATION OF LAW OR OTHERWISE, INCLUDING MERCHANTABILITY AND FITNESS FOR A PARTICULAR PURPOSE.

Preparation Method: Refer to individual job specification.

* Steel: S.S.P.C. 1, 2, 3 and S.S.P.C. 6 - Commercial Sandblast to a 1.5 - 2 mil profile. Recommended S.S.P.C. - 10 for immersion.
* Concrete: Sandblast, vacuum blast, acid etch, degrease, detergent and/or solvent clean and dry. Prepared surface should equal medium sandpaper.
* Wood: Power sand, degrease, strip and remove all existing finish, stains and unsound wood.
* Basic: The surface must be structurally sound, clean, dry and free of intervening barriers to block or interfere with penetration and adhesion.
* Old Paint: Sand, degrease, clean and dry. Test apply and inspect for softening, attack, lifting and wrinkling. Overall adhesion will be limited to the adhesion of the old paint or coating.

Application Methods: Refer to individual job specification.

* Brush: Natural fiber or solvent resistant synthetic.
* Roller: Short-medium nap roller, solvent resistant.
* Lambswool: Not recommended for solventless application. Add 10-15% M.E.K.
* Spray: Air pressure or airless spray. Refer to publication.

Application Parameters:

Environment:	40°F-100°F @ 90%-20% R.H.
Coverage:	1,604 mil feet per gallon.
* Recommended Coverage:	160 sq. ft./gallon, per coat. (Standard Film). 10 mils wet and dry.
* Mix Ratio:	3:1 by volume. Pot Life: 60 minutes @ 77°F.
* Induction Time:	Not required. Mix well for 4 minutes.
* Dry Time:	Laboratory determined @ 77°F and 50% R.H. Tack Free: 8 hours; Nail Hard: 18 hours. Hard: 24 hours; Full Cure: 5 days.
* Repairs:	Clean, degrease and sand rough to a texture of medium grit sandpaper. Solvent wipe clean, reapply.

Safety Precautions:

Centron 416 M.S.D.S. Data Sheet
Read Project Specifications

Waste Disposal:

Remove and dispose of in accordance with M.S.D.S. Data Sheet, and local, state and federal Environmental Protection Agency and Department of Environmental Protection Regulations.

Appearance and Acceptance:

The cured dry finish should be smooth, glossy and hard. Centron 416 should be well bonded with no bubbles, wrinkles or surface defects. Non-skid texture for floors creates a finish commensurate with size and type of material. Refer to floor data.

CAUTION: CONTAINS FLAMMABLE SOLVENTS. KEEP AWAY FROM SPARKS AND OPEN FLAMES. IN CONFINED AREAS WORKMEN MUST WEAR FRESH AIRLINE RESPIRATORS. HYPERSENSITIVE PERSONS SHOULD WEAR GLOVES OR USE PROTECTIVE CREAM. ALL ELECTRIC EQUIPMENT AND INSTALLATIONS SHOULD BE MADE AND GROUNDED IN ACCORDANCE WITH THE NATIONAL ELECTRICAL CODE IN AREAS WHERE EXPLOSION HAZARDS EXIST. WORKMEN SHOULD BE REQUIRED TO USE NONFERROUS TOOLS AND TO WEAR CONDUCTIVE AND NONSPARKING SHOES.

MATERIAL SAFETY DATA SHEET

NPCA 1-82

FOR COATINGS, RESINS AND RELATED MATERIALS

(Approved by U.S. Occupational Safety and Health Administration, OSHA 20)

Section I

MANUFACTURER'S NAME: Triple G Coatings, Inc.

DATE OF PREP: 12/86

STREET ADDRESS: 1714 Bannard Street

CITY STATE AND ZIP CODE: Riverton, New Jersey 08077

EMERGENCY TELEPHONE NO: 609-829-1575

INFORMATION TELEPHONE NO: 609-829-1575

PRODUCT CLASS: Epoxy

MANUFACTURERS CODE IDENTIFICATION: Centron 416 Part A

TRADE NAME: Centron 416 Part A

Section II—HAZARDOUS INGREDIENTS

INGREDIENT	PERCENT	OCCUPATIONAL EXPOSURE LIMITS	VAPOR PRESSURE	TOXICITY DATA
Epoxy Resin Hardener			N.A.	

Section III—PHYSICAL DATA

BOILING RANGE: Not Applicable

VAPOR DENSITY: [X] HEAVIER [ ] LIGHTER THAN AIR

EVAPORATION RATE: [ ] FASTER [X] SLOWER THAN ETHER

PERCENT VOLATILE BY VOLUME: nil

WEIGHT PER GALLON: 7.9 lbs.

Section IV—FIRE AND EXPLOSION HAZARD DATA

FLAMMABILITY CLASSIFICATION: OSHA COMBUSTIBLE; DOT COMBUSTIBLE

FLASH POINT: 286°F C.C.

LEL: Not Determined

EXTINGUISHING MEDIA

[X] FOAM [ ] ALCOHOL FOAM [X] CO_2 [X] DRY CHEMICAL [ ] WATER FOG [ ] OTHER

UNUSUAL FIRE AND EXPLOSION HAZARDS

Toxic fumes will be evolved when this material is involved in a fire. Self contained breathing apparatus should be available for fire fighters. Cool fire exposed containers with water.

N.A. = Not Applicable

ECTS OF OVEREXPOSURE:
UTE: Will cause burns to skin and eyes. High concentration of vapors can cause severe irritation of eyes and respiratory tract. Liquid causes severe damage to mucous membranes if swallowed.
NIC: Prolonged or repeated exposure may cause asthma and skin sensitization or other rgic response.

RGENCY AND FIRST AID PROCEDURES:
ES: Immediately flush with large amounts of water for at least 15 minutes lifting upper lids occasionally. GET IMMEDIATE MEDICAL ATTENTION. If a physician is not immediately available, continue flushing with water.
IN: Immediately flush skin with water for at least 15 minutes while removing contaminated clothing and shoes. Launder clothing before re-use and discard contaminated leather articl Get medical attention if swelling or redness occurs.
HALATION: Remove to fresh air if effects occur and administer oxygen if necessary. GET MEDICAL ATTENTION if effects persist.
GESTION: DO NOT INDUCE VOMITING. Vomiting will cause further damage to the throat. Dilut by giving water or milk to drink if victim is conscious. GET MEDICAL ATTENTION IMMEDIATELY

Section VI - REACTIVITY DATA

BILITY: Stable under normal storage conditions.
COMPATIBILITY: Avoid contact with strong oxidizing agents, mineral acids (e.g. H_2SO_4, HCI), and epoxy resins under uncontrolled conditions.
ZARDOUS DECOMPOSITION PRODUCTS: CO (Carbon Monoxide), CO_2 (Carbon Dioxide), NO_X (Oxides of Nitrogen).

Section VII - SPILL OR LEAK PROCEDURES

MATERIAL IS SPILLED: Avoid contact with material. Persons not wearing appropriate protect equipment (see below) should be excluded from the area of spill until clean-up is complete. spill at source, dyke area to prevent spreading, pump liquid to salvage tank. Remaining may be taken up on clay, diatomaceous earth or other absorbent and shoveled into l containers.
STE DISPOSAL METHOD: Dispose of as hazardous waste in accordance with Federal, State and cal regulations.

Section VIII - SPECIAL PROTECTION INFORMATION

SPIRATORY PROTECTION: NIOSH approved respiratory protection required in the absence of oper environmental control. For emergencies, a self-contained breathing apparatus, or a ll-face respirator is recommended.
NTILATION: Breathing of vapors must be avoided. Ventilation must be sufficient to control pors. This material should be confined as far as possible within sealed or covered equipmer which case normal ventilation should be adequate. Special (local) ventilation will be eded in areas where vapors are expected to be vented.
ND PROTECTION: Impervious gloves, neoprene or rubber.
E PROTECTION: Splash proof goggles or safety spectacles with side shields.
HER PROTECTIVE EQUIPMENT: Clean, body-covering clothing. Further safety equipment (apron, otwear, etc.) should be used as necessary to prevent contact with material.

Section IX - SPECIAL PRECAUTIONS

- Prevent all skin and eye contact.
- Avoid breathing vapors.
- Re-seal part used containers.
- Ensure that all containers are properly labelled to prevent accidental ingestion.
- Wash with soap and water before eating, drinking, smoking or using toilet facilities.
- Observe conditions of good industrial hygiene and safe working practice.

MATERIAL SAFETY DATA SHEET

NPCA 1-82

FOR COATINGS, RESINS AND RELATED MATERIALS

(Approved by U.S. Department of Labor Occupational Safety and Health Form OSHA-20)

Section I

MANUFACTURER'S NAME
Triple G Coatings, Inc.

DATE OF PREP 12/86

STREET ADDRESS
1714 Bannard Street

CITY STATE AND ZIP CODE
Riverton, New Jersey 08077

EMERGENCY TELEPHONE NO 609-829-1575

INFORMATION TELEPHONE NO 609-829-1575

PRODUCT CLASS
Epoxy

MANUFACTURERS CODE IDENTIFICATION
Centron 416 Part B

TRADE NAME
Centron 416 Part B

Section II—HAZARDOUS INGREDIENTS

INGREDIENT	PERCENT	OCCUPATIONAL EXPOSURE LIMITS	VAPOR PRESSURE	TOXICITY DATA
O-Cresyl Glycidyl Ether CAS No. 26447-14-3				
Epichlorohydrin CAS No. 106-89-8				
Alkyl Phenol CAS No. 25154-52-3				
Epichlorohydrin-Polyglycol Reaction Product CAS No. 9072-62-2				
Titanium Dioxide CAS No. 13463-67-7				

Section III—PHYSICAL DATA

BOILING RANGE Not Applicable

VAPOR DENSITY ☒ HEAVIER ☐ LIGHTER THAN AIR

EVAPORATION RATE ☐ FASTER ☒ SLOWER THAN ETHER

PERCENT VOLATILE BY VOLUME nil

WEIGHT PER GALLON 9.8 lbs.

Section IV—FIRE AND EXPLOSION HAZARD DATA

FLAMMABILITY CLASSIFICATION OSHA COMBUSTIBLE
DOT COMBUSTIBLE

FLASH POINT

LEL Not Determined

EXTINGUISHING MEDIA

☒ FOAM ☐ ALCOHOL FOAM ☒ CO_2 ☒ DRY CHEMICAL ☐ WATER FOG ☐ OTHER

UNUSUAL FIRE AND EXPLOSION HAZARDS

None

Section V- HEALTH HAZARD DATA

ECTS OF OVEREXPOSURE:
UTE: Will cause burns to skin and eyes. High concentration of vapors can cause severe irritation of eyes and respiratory tract. Liquid causes severe damage to mucous membranes swallowed.
IC: Prolonged or repeated exposure may cause asthma and skin sensitization or other allergic response.

RGENCY AND FIRST AID PROCEDURES:
ES: Immediately flush with large amounts of water for at least 15 minutes lifting upper lids occasionally. GET IMMEDIATE MEDICAL ATTENTION. If a physician is not immediately available, continue flushing with water.
IN: Immediately flush skin with water for at least 15 minutes while removing contaminated clothing and shoes. Launder clothing before re-use and discard contaminated leather articles Get medical attention if swelling or redness occurs.
HALATION: Remove to fresh air if effects occur and administer oxygen if necessary. GET MEDICAL ATTENTION if effects persist.
GESTION: DO NOT INDUCE VOMITING. Vomiting will cause further damage to the throat. Dilute by giving water or milk to drink if victim is conscious. GET MEDICAL ATTENTION IMMEDIATELY.

Section VI - REACTIVITY DATA

ABILITY: Stable under normal storage conditions.
COMPATIBILITY: Avoid contact with strong oxidizing agents, mineral acids (e.g. H_2SO_4, HCI), and epoxy resins under uncontrolled conditions.
ZARDOUS DECOMPOSITION PRODUCTS: CO (Carbon Monoxide), CO_2 (Carbon Dioxide), NO_x (Oxides of Nitrogen).

Section VII - SPILL OR LEAK PROCEDURES

MATERIAL IS SPILLED: Avoid contact with material. Persons not wearing appropriate protecti equipment (see below) should be excluded from the area of spill until clean-up is complete. pill at source, dyke area to prevent spreading, pump liquid to salvage tank. Remaining may be taken up on clay, diatomaceous earth or other absorbent and shoveled into sposal containers.
STE DISPOSAL METHOD: Dispose of as hazardous waste in accordance with Federal, State and cal regulations.

Section VIII - SPECIAL PROTECTION INFORMATION

SPIRATORY PROTECTION: NIOSH approved respiratory protection required in the absence of oper environmental control. For emergencies, a self-contained breathing apparatus, or a ll-face respirator is recommended.
NTILATION: Breathing of vapors must be avoided. Ventilation must be sufficient to control pors. This material should be confined as far as possible within sealed or covered equipment which case normal ventilation should be adequate. Special (local) ventilation will be eded in areas where vapors are expected to be vented.
ND PROTECTION: Impervious gloves, neoprene or rubber.
E PROTECTION: Splash proof goggles or safety spectacles with side shields.
HER PROTECTIVE EQUIPMENT: Clean, body-covering clothing. Further safety equipment (apron, otwear, etc.) should be used as necessary to prevent contact with material.

Section IX - SPECIAL PRECAUTIONS

Prevent all skin and eye contact.
Avoid breathing vapors.
Re-seal part used containers.
Ensure that all containers are properly labelled to prevent accidental ingestion.
Wash with soap and water before eating, drinking, smoking or using toilet facilities.
bserve conditions of good industrial hygiene and safe working practice.

APPENDIX D-11

PEGASUS FUEL BLENDING SYSTEM OPERATIONS MANUAL

PEGASUS CONSULTANTS
345 THIRD STREET - SUITE 640
NIAGARA FALLS, N.Y. 14303
(716) 285-3856
FAX (716) 285-7579

FUNCTIONAL DESCRIPTION

DRUM PROCESSING/
FUEL BLENDING SYSTEM

CLEAN HARBORS - CHICAGO
July 6, 1994

FUNCTIONAL DESCRIPTION

TABLE OF CONTENTS

Section — Page

1.0 Overview....1-1

1.1 Drums and Drum Contents....1-1
1.2 Processing Rate and Cycle Time....1-1
1.3 Materials Processing System....1-2
1.4 Drum Processing System....1-2
1.5 Control....1-3
1.6 Operators....1-3

2.0 Drum Movement and Processing....2-1

2.1 Sequence of Operation....2-1
2.2 Drum Preparation Outside of Enclosure....2-2
2.2.1 Drum Loading....2-2
2.2.2 Drum Preparation....2-3
2.2.3 Lid or Head Removal....2-3
2.3 Drum Processing Inside of Enclosure....2-4
2.3.1 Drum Movement into Enclosures....2-4
2.3.2 Drum Movement Inside of Enclosure....2-4
2.3.3 Drum Lift and Tilting....2-5
2.3.4 Drum Scraping....2-5
2.3.5 Drum Crushing....2-5
2.3.6 Crushed Drum Ejection....2-6
2.4 Crushed Drum Fate - Outside of Enclosure....2-6
2.4.1 Crushed Drum Movement and Storage....2-6
2.4.2 Uncrushed and Problem Drums....2-6

3.0 Materials Processing....3-1
3.1 Drum Emptying and Large Debris Removal....3-1
3.2 Size Reduction....3-1
3.2.1 Coarse Shredder....3-1
3.2.2 Dispersion Tank....3-1
3.2.3 Intermediate Grinder....3-2
3.3 Liquid Movement....3-3
3.3.1 Continuous Operation....3-3
3.3.2 Pumps....3-3
3.3.3 Continuous Flow....3-3
3.3.4 Balancing....3-4
3.4 Debris Removal....3-4
3.4.2 Dispersion Tank Bottom Valve....3-4
3.4.3 Overflow Tank....3-4
3.4.4 Magnetic Trap....3-4
3.4.5 Intermediate grinder....3-4

4.0 Emissions, Safety and Fire Considerations.....4-1
4.1 The Enclosure Pressure/Vacuum Control.....4-1
4.2 Nitrogen Control.....4-1
4.3 Operator Health Considerations.....4-2
4.4 Air Pollution Considerations.....4-2
4.5 Fire Considerations.....4-3
4.5.1 O_2 Level.....4-3
4.5.2 Temperature.....4-3
4.5.2.1 Temperature of 120°F.....4-3
4.5.2.2 Temperature of 190°F.....4-3
4.5.3 Submerged Shredding.....4-4
4.5.4 Electrical Equipment.....4-4
4.5.5 Grounding and Bonding.....4-4
4.5.6 Emergency CO_2 System.....4-4
4.6 Fugitive Emissions.....4-5
5.0 Operation Control.....5-1
5.1 System Start-Up 5-1
5.2 System Shut Down.....5-1
5.2.1. Normal Shut Down.....5-1
5.2.2. Emergency Shut Down.....5-2
5.2.3. Process Condition Shut Down.....5-2
5.3 Control Systems and Operator Responsibility...5-2
5.3.1 Control System.....5-2
5.3.2 Control Panel #1/Fork Lift Operator.5-3
5.3.3 Control Panel #2/Drum Processing Operator.....5-3
5.3.4 Control Panel #3/Waste Processing Operator.....5-3
5.3.5 Control Panel #4/Drum Feed to Enclosure.....5-4
5.4 Drum Movement (Automatic Mode).....5-4
5.4.1 Movement of Drums to Conveyor C.....5-4
5.4.2 Drum Preparation and Loading into Enclosure.....5-5
5.4.3 Inside Enclosure.....5-5
5.3.4 Drum Tilting and Scraping.....5-5
5.5 Nitrogen Addition and Enclosure Vacuum.....5-6
5.6 Temperature Control.....5-6
5.7 Viscosity.....5-7

1.0 OVERVIEW

The system is comprised of two (2) main subsections.

a) Drum Proccessing

b) Waste Material Processing

The total system will be operated by two (2) men.

Drums will be transferred from the existing storage room to the Fuels Blending system by Clear Harbors fork lift trucks.

1.1 Drums and Drum Contents

The drums will be standard fifty-five (55) gallons, both open and closed head. It is assumed that 10% of the drums will be closed head requiring de-heading.

The drums will be full or partially full of a wide variety of waste materials.

The system is designed and built to contend with this wide range of properties.

1.2 Processing Rate and Cycle Time

The normal cycle time for one problem free open head drum will be approximately 2 minutes.

The processing rate is determined by the mechanical equipment for lifting, tipping, scraping and crushing the drum. The dispersion and particle size reduction system is capable of processing the materials at a faster rate than the drum processing section can supply.

At any one time there could be twenty (20)to thirty (30) drums in the system ahead of the Enclosure Airlock door with two (2) drums in the Enclosure.

1.3 Materials Processing System

The Materials Processing section will receive liquids, sludge, solids and viscous materials from the drum processing system. It will receive recycle fuel from Clear Harbors's storage tank farm.

The waste will undergo;

1) Coarse shredding

2) High speed dispersion - continuous

3) Intermediate grinding

4) Fine grinding

The system will produce a blended fuel with particle size less than 1/8th of an inch.

Recycled fuel will be continually pumped from Clear Harbors's tank farm into the dispersion system which is a continuous system with overflow being pumped to the tank farm.

1.4 Drum Processing System

Drums will be loaded onto Zone 1 of the system feed conveyor by Clear Harbors fork lift trucks.

The drums will be moved along the conveyor system and up to the working level to a lid removal station where the operator will remove rings from open head drums and de-head closed head drums.

The lid will remain on the drum until just before the drum passes through the inlet door into the Drum Processing Enclosure in which is maintained as slight vacuum.

The lid will be removed by the operator.

Inside the enclosure the drum will be lifted into position, securely clamped and tilted. After being tilted the drum will be scraped clean. With the contents removed the drum will be crushed and the crushed drum ejected through the outlet door.

Access is arranged so that unshreddable debris can be removed from the system.

Drum scraping and all material processing is done in a Nitrogen Blanketed atmosphere.

The Dispersion Tank is designed so that seals prevent the nitrogen gas escape from the inlet or outlet ports.

1.5 Control

Control panels are included and located for easy monitoring and system control by the operators. The control panels include visual displays of important control parameters such as motor amps, motor running lights, temperatures, O_2 level, Liquid levels, etc.
There are four control panels:
Control Panel #1: Control Panel #1 is located near the point at which the fork lift truck driver loads drums onto Zone 1 of Conveyor 'A'. This control panel contains one illuminated push button for controlling Zone 1 of Conveyor 'A'

Control Panel #2: This is the Drum Processing Control Panel which monitors and controls all drum movement and processing. Control Panel #2 is located on the platform near the drum entrance to the Drum Processing Unit and is operated by the Drum Processing operator.

Control Panel #3: This is the Materials Processing Control Panel which monitors and controls all waste processing equipment and functions. Control Panel #3 is located close to Control Center #2.

Control Panel #4: This panel includes a push button and light and is located at the entrance to the Drum Processing Enclosure. When the "Next Drum" light goes on, the Drum Processing Operator pushes the button on this panel to start the automatic drum loading sequence.

1.6 Operators - There will be manual operations as follows:

1. Forklift truck driver. The forklift truck driver will place drums on Zone 1 of Conveyor 'A' and operate the button on Control Panel #1.

2. Drum Processing operator will:

   (a) Operate the four drum lift
   (b) Transfer drums from Conveyor B
   (c) Remove lids and rings and dehead closed head drums
   (d) Load drums into the enclosure
   (e) Monitor drum movement and processing

3. Waste Processing Operator will:

   (a) remove debris or unshreddable material from the coarse shredder
   (b) monitor the crushed drum transfer
   (c) monitor the waste processing operation and equipment
   (d) handle uncrushed and problem drums
   (e) replace full debris drum

2.0 DRUM MOVEMENT AND PROCESSING

2.1 Sequence (Refer to DWG 94-31-SO3R1 for Drum Positions)

1. Drums are loaded two (2) at a time onto Zone 1 of Feed Roller Conveyor A by Fork lift operator. (Position I)

2. Drums move along Roller Conveyor A onto Conveyor B which is mounted in the two drum lift. (Position 2)

3. When four (4) drums have been loaded onto Conveyor B the operator presses push button on Control Panel #2 and the Lift Mast and Roller Conveyor B automatically raise to the proper elevation.

4. When at the proper elevation (position #3) the operator presses push button on Control Panel #2 and lift Conveyor B unloads both drums onto Conveyor C. The operator then presses a button which lowers the mast to its original position to begin the sequence again.

5. When drums on Conveyor C have been moved manually into the De-lid position the operator removes the rings from open head drums. (Position 4)

6. If the drum is a tight head drum it is moved into the De-head position where the head is cut through. (Position 5)

7. Once the drum is near the Inlet Door, Position 6, the lids are removed by the operator and the Inlet Door is opened by pressing the button on the Control Panel #4. (The "Next Drum" light on control panel #4 lights up when the enclosure is ready to accept a drum.)

8. The operator assists in loading the drum onto the CDLR Conveyor 'D/E', the drum moves inside the enclosure to the Inlet pinstops and the Inlet door closes automatically with the drum in Position 7.

   <u>Once the drum is inside the enclosure the following is automatically controlled:</u>

9. The drum is moved along roller Conveyor 'D' until it hits the Lift Pin Stops at position #8 the lifting position.

10. The drum is raised to Position #9 by the Lift Cylinder.

11. The drum is clamped against the pouring plate by the action of the clamping cylinder and pulled into position #10.

12. The drum is tilted 105 degrees into the scrape position #11 by action of the Tilt Cylinder.

Pegasus Consultants 345 Third Street, Suite 525 Niagara Falls, New York 14303

13. The Auger cylinders retract bringing the anvil car into proper position supporting the bottom of the drum and to force the Rotating Auger into the drum. The Rotating Auger removes material from drum to hopper.

14. When the Auger reaches the bottom of the drum and the Dwell period is complete, the Auger cylinder extend to remove the Auger from the drum and to push the anvil car to its original position.

15. The drum is untilted and returns to Position #10 and the Drum Clamp released.

16. The Drum Bumper Cylinder moves the drum laterally onto the forks at Position #9.

17. The Lift Fork lowers the drum onto the Roller Conveyor 'D/E'. (Position #8)

18. The drum moves along Roller Conveyor 'D/E' into the crushing position #12.

19. In the crush position #12, the Platen is lowered until the drum is crushed.

20. The Outlet door opens and the crushed drum moves along Conveyor 'E' through the Outlet door onto Conveyor 'F', and the Outlet door closes automatically. At the end of Conveyor 'F' the crushed drum falls into a hopper supplied by Clear Harbors.

21. Problem drums and uncrushed drums are automatically diverted from Conveyor 'F' onto Conveyor 'G' where they are handled by the operator.

2.2 Drum Preparation Outside of Enclosure

2.2.1 Drum Loading

Drums are brought out four (4) at a time on a forklift and placed on Zone 1 of Feed Roller Conveyor'A'. The forklift truck driver backs away from the Conveyor 'A' and when clear presses a button on control panel #1 which allows the first zone on Conveyor 'A' to start provided a signal from the second zone of Conveyor 'A', indicating that the second zone is clear is received.

The drums are then moved from Zone 1 through Zone 3 on Conveyor 'A' automatically. Zone 3 of Conveyor 'A' is activated and drums are discharged onto lift Conveyor 'B' provided lift Conveyor 'B' is in the lowered position and empty.

Drum Lifting

When Conveyor 'B' is full the operator presses a button on Control Panel #2 and the lift automatically raises and stops in the Raised Position at which point the "Mast Up" light on Control Panel #2 indicates the system is waiting for the Drum Processing Operator to press the "Start Conveyor B" button on the Control Panel #2 to feed both drums onto Gravity Conveyor 'C'.

After both drums have been discharged from Lift conveyor B, the operator presses a button on Control panel #2 to send the Lift Conveyor B down to repeat the cycle.

Four Drum Lift

Lift Roller Conveyor B which holds four (4) drums, is mounted on the lift forks of the Four Drum Lifter.

The forks are raised and lowered via hydraulic mast.

2.2.2 Drum Preparation

Drum Preparation Conveyor C has space for several drums. The four (4) drums which are discharged form the lift Roller Conveyor 'B' are fed into the first four (4) positions. In these four (4) positions the rings from open head drums are removed. The operator orients the drums by hand and takes off rings with an air tool, the lid is left on. If the drum is closed head the operator pushes the drum into the Drum De-head Station and cuts the head using the drum de-header.

The lid or loose head is left on the drum until the drum is placed into Inlet position of the Enclosure.

The removed ring is stored on a hook and transferred manually as required to Conveyer F which automatically discharged them into the crushed drum hopper.

2.2.3 Lid or Head Removal

The lid or loose head stays on the drum until it is just ahead of the Inlet Door ready for loading into the enclosure. When the drum passes through the Inlet loading door, the operator removes the lid and places it into a covered container. Lids are periodically transferred to Conveyer F which automatically discharged them into the crushed drum hopper.

2.3 Drum Processing Inside of Enclosure

Inside the enclosure the drum undergoes the following operations;

a) Movement to the lift position

b) Lift and Clamp - The drum is raised into position and clamped

c) Tilting - liquids and some solids fall out

d) Scraping - A scraper and auger enters the drum, separates the viscous materials from the drum sides and drags or augers the waste into the coarse shredding section.

e) Crushing - The drum travels into the crushing section where it is crushed into a flattened compacted doughnut

f) Exit - The drum exits from the enclosure via the outlet door and drops into the crushed drum receiving hopper

2.3.1 Drum Movement into Enclosure

The operator pushes the drum until it is just ahead of the Inlet door 'A'. The "Next Drum" light will be illuminated on Control Panel #4 to indicate that the Drum crusher is clear and the Outlet door is closed.

With Control Panel #4 "Next Drum" light on the Drum Processing operator presses the "Open Door A" button, assists the drum onto Conveyor 'D' and removes the lid. The drum will automatically travel to the Inlet Pin Stops, and the Inlet door will close and the "Next Drum" light will go out.

2.3.2 Drum Movement Inside of Enclosure

With Inlet door 'A' and Outlet door 'C' closed, a full drum in the Inlet position and an empty (previously scraped) drum in the lift position, the Inlet pinstops are lowered and the Conveyor 'D/E' start moving the empty drum into the crush position and the full drum into the lift position. The full drum is stopped in the proper location for lifting (position #8) by the lift position pinstops which raised into position as soon as the empty drum cleared the lift position.

When the full drum is in the lift position (position #8) and the empty drum is in the crushing position (position #12) the Conveyor 'D/E' is stopped and the "lifting and tilting" sequence begins.

2.3.3 Drum Lift and Tilting

The full drum in the lift position is raised into the clamp and tilt assembly (position #9) by the forks and action of the lift cylinder.

The clamp cylinders are activated and securely clamp the drum against the pouring plate (position #10).

The tilt cylinder is now activated to rotate the drum 105° into the tilted position (position #11). The clamp and tilt assembly contains a back plate which acts as a door (Door 'B') and closes tightly at the end of the tilting stroke.

2.3.4 Drum Scraping

Under the force of the main rams the anvil car is now moved into position to support the bottom of the drum and the auger car is moved forward forcing the auger and sleeve into the drum with the auger slowly rotating.

After a dwell period, the auger and sleeve are withdrawn from the drum and the anvil car is returned to its original position.

During the drum scraping operation the drum surfaces are scraped clean and the solids and liquids are dragged out of the drum and into the coarse shredder receiving hopper.

The empty drum is now rotated 105° to its original position and the clamps released. The drum bumper then pushes the drum 3" along the forks and the drum is lowered onto Roller Conveyor 'D' in the lift position.

2.3.5 Drum Crushing

Once the drum is lowered onto Roller Conveyor 'D/E' it is moved to the Drum Crushing position under the Crusher Platen at the same time the full drum in the Inlet Position is moved to the Lift Position, as described in Section 2.3.2.

After the drum is located under the Crusher Platen (position #12) the Drum Crusher Cylinder lowers the platen to crush the drum to a height of 6 inches, and then returns the platen to its upper resting position.

When in the crushing position, the drum is resting on spring loaded rollers which depress under the downward action of the platen, and set the drum on the crushing anvil plates.
As the platen is raised, pressure is eliminated and the rollers raise up and once again raising the now crushed drum above the anvil plates.

2.3.6 Crushed Drum Ejection

As the platen is raised to its resting up position and Roller Conveyor E is raised up to its normal position. The Outlet door is opened, Conveyor 'E' started, and the drum is discharged from the enclosure onto Crushed Drum Discharge Conveyor 'F'.

Drum Crushing and Crushed Drum Ejection takes place on the previous drum while the current drum is undergoing lift, clamp, tilt and scraping. The return tilt movement cannot take place until the Outlet door has closed and the subsequent drum has entered the enclosure to the Inlet position and the Inlet door closed.

2.4 Drum Fate - Outside of Enclosure

2.4.1 Crushed Drum Movement and Storage

The crushed drum travels along Crushed Drum Discharge Conveyor F outside of the Enclosure and drops into Clear Harbors's crushed drum hopper.

2.4.2 Uncrushed and Problem Drums

Uncrushed and problem drums are automatically diverted from Conveyor 'F' onto Conveyor 'G' where the lids and rings are replaced on the drum by the waste processing operator in position #14. The drums are then lowered to floor level by forklift truck or other means.

3.0 MATERIALS PROCESSING

3.1 Drum Emptying and Debris Removal

The contents from the drum drop from the auger sleeve into the Coarse Shredder receiving hopper and onto the shredder. All liquids flow directly through the Coarse Shredder while the solid materials are shredded. All materials passing through the shredder are conveyed from the Coarse Shredder to the Dispersion Tank via the Screw Conveyor.

3.2 Size Reduction

Size reduction is accomplished in four (4) steps;

1) The Coarse Shredder through which all lumps pass before entering the dispersion tank.

2) The Dispersion tank - the high speed blade will further reduce particles.

3) The Intermediate grinder will ensure that all particles passing through will be less than 1" x 1/4" x 1/4". Note: most particles will be less than 1/4" x 1/4" x 1/4"

4) The Fine Grinder is the last step in the grinding circuit. It will ensure that all particles are less than 1/8"

3.2.1 Coarse Shredder

All material except debris hand-picked by the Debris Removal Operator passes through the Coarse Shredder before entering the Dispersion Tank.

3.2.2 Dispersion Tank

The following flows enter the Dispersion Tank:

a) Low viscosity liquid (recycled fuel) from the Storage Tank is added on a continuous basis at the rate of approximately 95 gpm.

b) Drum contents which pass through the Coarse Shredder.

The following flows leave the Dispersion Tank:

a) Low viscosity blended fuel containing some particles. This is removed continuously at a rate of approximately 120 gpm.

b) On an intermittent basis high density solids will be removed from the bottom port.

Inside the Dispersion Tank the following actions take place:

a) The larger lumps of organic material are reduced in size by the high speed cutter blade.

b) The viscosity of the waste material is reduced by thorough mixing with the continuous flow of low viscosity fuel from the storage tank.

c) Metals and high density materials are separated by gravity and removed through the bottom port.

High Speed Blade

The High Speed Blade, driven by a 75 hp motor (M9) at approximately 1100 rpm and made of carbon steel, cuts up the large lumps of organic material passing through the Coarse Shredder. This blade also mixes and disperses the fine solids into a low viscosity fluid to be fed to the storage tank via the Intermediate and Fine Grinders.

Slow Sweep

The Slow Sweep Blade continually disturbs light materials lying on the bottom so they become re-entrained and broken down by the High Speed Blade.

Heavier metal objects will be pushed towards the center well - where they can be intermittently removed by opening the Bottom Valve and allowing the heavy objects to fall into the Debris Container.

3.2.3 Intermediate Grinder

The dispersed liquid overflowing the weir enters the Pump Feed Chamber.

The purpose of the Pump Feed Chamber is to conserve nitrogen gas in the system.

The liquid discharged from the Pump Feed Chamber travels through an in-line magnetic separator and into the Intermediate grinder (M11) which is on the suction side of the Dispersion Pump feed Chamber Pump #1 (M13).

The Intermediate Grinder will ensure that maximum lump size downstream is 1" x 1/4" x 1/4".

This grinder is fitted with controls which protect it against hard objects such as ball bearings. The control senses an uncrushable lump and causes the shredder to reverse rotation and then reverse again. If after three (3) attempts the lump is not broken, the following occurs:

* The shredder cuts out
* The materials processing activities following the Intermediate Shredder are stopped.
* Visual and audible alarms on the Control Panel #3 are activated.

3.3 Liquid Movement

3.3.1 Continuous Operation

With both pumps running, liquid is continually transferred from the storage tank to the dispersion tank, waste is added from the drum via the Coarse Shredder and liquid is transferred back to the storage tank from the grinding system.

3.3.2 Pumps

Only two (2) pumps are used for pumping liquids

Pump #1 -pumps the overflow from the dispersion tank through the Magnetic Trap, and Intermediate Grinder. The Grinder and Magnetic Traps are located between the Dispersion Tank and Pump #1. This pump is operated continually.

Pump #2 - will transfer low viscosity liquid from Clear Harbors storage tanks to the Dispersion Tank. This pump will be operated continually.

3.3.3 Continuous Flow

The purpose of this continuous recirculating movement of liquids is:

1)To ensure that the liquid contents of the Dispersion Tank have a low viscosity and can be pumped easily to the Storage Tank.

2) To ensure a continuous rather than a batch operation.

3)To keep the contents of the Dispersion Tank cool since the horsepower generated by the dispersion blades is converted into heat and dissipated into the contents of the tank.

3.3.4 Balancing

The pumping rate of Pump #1 is varied in response to the liquid level in the Overflow Tank as sensed by the Capacitance Type Sensor. When the liquid level approaches the lower control level, Pump #1 is caused to slow down, when the liquid level raises and approaches the higher control level the pumping rate of Pump #1 is increased.
There are two (2) fixed liquid level detectors operating on the ultra-sonic principle. If the Liquid level reaches the Emergency High control level Pump #2 is shut off and the pumping rate of Pump #1 is increased to the highest rate.

3.4 Debris Removal

3.4.1 Dispersion Tank Bottom Valve

Heavy objects which pass through the Coarse Shredder and which are too heavy to become suspended, dispersed and reduced in the Dispersion Tank will be removed via the Bottom Flange of the Dispersion Tank.

3.4.3 Overflow Tank

All liquid overflowing the weir passes through the Overflow Tank and Magnetic Separator before entering the pipe leading to the Intermediate and Fine Shredding units.

High density materials such as steel and metals will fall to the bottom and will be periodically removed manually through the bottom access door.

3.4.4 Magnetic Trap

Small magnetic objects which remain suspended and did not fall out in either the Dispersion Tank or the Overflow Tank will be removed in the In-Line Magnetic Trap. Occasionally the In-Line Magnetic Trap will be opened up and magnetic materials removed.

3.4.5 Intermediate Grinder

When a signal alerts that the Intermediate Shredder has stopped, the operator removes the uncrushable material.

4.0 CONTROL OF EMISSIONS, SAFETY AND FIRE CONSIDERATIONS

4.1 The Enclosure Pressure/Vacuum Switch

The Drum Processing Enclosure is divided into two spaces or chambers:

(a) The Drum Movement Chamber
(b) Drum Scraping Chamber

When the drum is tilted to 105 degrees for scraping, Door 'B' which is part of the tilting carriage closes so that the Scraping Chamber is isolated from the Drum Movement Chamber.

A continuously running fan is connected to the Drum Movement Chamber and maintains it under a slight vacuum.

The fan is selected so that it can maintain a vacuum of 1/2 ins. water when the drum Inlet Door 'A' is in the open position and accepting a drum. Note that the short tunnel at the entrance to the P.L.C. is blocking 90% of the area of the door, thus the Door 'A' should not be opened unless there is a drum in the Input position.

The Pressures Switch is set for 1/2 ins. of water vacuum. If the vacuum is less than this value the audible alarm and low vacuum warning light on CP #3 are activated.

4.2 Nitrogen Control

The atmosphere in the Drum Scraping Chamber, Shredder Hopper, Shredder, Screw Conveyor and Dispersion and Overflow Tanks will be controlled to prevent accidental ignition of vapors.

The space in the Drum Scraping and Materials Processing areas are normally slightly positive and approximately 95% Nitrogen.

Nitrogen flow is controlled by two (2) solenoid valves.

The first valve is opened and closed based upon the level of oxygen detected by the Oxygen Sensor (OT) located in the Coarse Shredder feed hopper. If O_2 exceeds 5% SV26 will open allowing Nitrogen to pass into the vapor space above the liquid surface in the Dispersion Tank and into the Screw Conveyer. Nitrogen will flow from the Dispersion Tank and the Screw Conveyor through the Grinder and into the hopper.

The second Nitrogen Flow Control Valve is opened when the Scraper Sleeve begins its forward travel into the drum and continues until the auger reaches the bottom of the drum.

If the O_2 level reached 5-1/2%:

a) All motors except Hydraulic System Motor are shut down.

b) Feeding of new drums to the enclosure will be prevented through automatic shut down of Roller Conveyor D and the Inlet Airlock door.

c) The possibility of accidental ignition will be prevented by automatic shut down of Drum Crusher, Drum Scraper, Coarse Shredder and both Dispersion Tank blade motors.

Liquid Level Control
In order to prevent N_2 being sucked into the inlet of Waste Liquid Pump #1 - The Pump Feed Chamber is fitted with liquid level controls which automatically changes the speed of Pump #1 as required to ensure the Pump Feed Chamber never runs dry.

4.3 Operator Health Considerations

Fume Control and Materials Feed and Removal

The system is kept under vacuum to ensure vapors do not escape out of the enclosure into the work area. The following practices also ensure that vapors are kept to a minimum.

Drum Entering

The lid is kept on the drum until the drum is fed into the Enclosure.

Tight head drums that need the head removed will be deheaded in position # 3. The loose head will not be removed at this time. The drum will be pushed forward into the loading position # 6 with the loose head resting on the drum.

Crushed Drum Exit
The crushed drums will exit the Enclosure through the Outlet door and drop into the Crushed Drum Receiving Hopper supplied by Clear Harbors.

Machinery Breeches
All openings listed in Section 3.0 will be tightly sealed with mechanical seals and will not require air capture.

4.4 Air Pollution Considerations

The total amount of vapors generated in the enclosure per shift is expected to be very low.

Under normal operation all this vapor will be extracted along with the Nitrogen gas and leakage air from the enclosure and ejected into the atmosphere outside via an activated carbon canister system.

4.5 Fire Considerations

The following features will ensure ignition does not take place.

4.5.1 O_2 Level

The possibility of ignition is eliminated by keeping the O_2 content in the Drum Scraping Chamber of the enclosure below the maximum level recommended in NFPA 69 "Explosion Prevention System".

This is accomplished by controlled injection of Nitrogen gas into the enclosure. (see Section 4.2)

4.5.2 Temperature

In addition to the features described in Section 4.2, a temperature control feature is also included. Temperature is continually sensed and indicated on control panel #3 for the following locations:

Enclosure Vapor Temperature
Dispersion and Pump Feed Chamber Vapor Temperature
Pump Feed Chamber Liquid Temperature
Storage Tank Liquid Temperature

The operator will be trained to observe temperature indicators and to take corrective action to ensure temperatures do not rise to dangerous levels.

4.5.2.1 Temperature of 120°F

If any of the above four sensors sense a temperature of 120° F or higher the following events occur automatically:

* high temperature warning light and audible alarm are activated
* all motors in the system are shut down
* all drum movement within the system is stopped

4.5.2.2 Temperature of 190°F

The system also includes a Carbon Dioxide System which is designed according to NFPA 12, "Carbon Dioxide Systems".
This system is complete with its own rate compensated temperature sensors and is controlled independently and will not require a signal from the PLC to operate.

If any of the Carbon Dioxide System temperature sensors read a temperature of 190°F or sense a rapid rise in temperature the system will assume that despite all other precautions, a fire is actually taking place. The emergency CO_2 System valve will open and release all the CO_2 rapidly into the Drum Processing Enclosure and the Dispersion Tank vapor space. At the same time all motors for the entire system will shut down including the enclosure fan to prevent air from outside entering the enclosure.

The Emergency CO_2 System will be comprised of four (4) bottles of pressurized CO_2 gas (two main and two reserved) connected to one manifold with piping on the downstream side of the valve leading to the Enclosure and Dispersion Tank Vapor Space, each set is controlled by one CO_2 valve.

It should be noted that the liquid nitrogen system is supplied with an evaporator sized to supply sufficient nitrogen gas under normal conditions. The Nitrogen system cannot, however, convert liquid to gas at the rate required to smother an actual fire.

4.5.3 Submerged Shredding

All high speed shredding and dispersion takes place below liquid level to preclude sparking.

Drum Scraping and Coarse Shredding are the only activities which take place above liquid level. These activities take place at slow speed in the Nitrogen Blanketed Enclosure and should not produce a high energy spark.

If any time during operation of the system any of the pressure sensors do not sense a pressure of .25 PSI the entire system is shut down.

4.5.4 Electrical Equipment

All electrical wiring and equipment is built to N.E.C. and local codes for Class 1 Division 1 Hazard rating.
Control Panels 2 and 3 are purged Panels complying with N.E.C Type X purging (Class 1 Division 1 to Non-Hazardous)

4.5.5 Grounding and Bonding

All equipment will be electrically bonded and grounded and the resistance to ground tested and verified before start-up.

4.5.6 Emergency CO_2 System

The system is complete with an emergency CO_2 system which operates as described in section 4.5.2.2.

4.6 Fugitive Emissions

There are three (3) doors, two (2) to allow drums in and out of the enclosure, and one for the removal of debris.

Section 4.1 described how the atmosphere in the enclosure remains negative. Fugitive emissions into the room are prevented, by maintaining the enclosure under negative pressure at all times. Fugitive emissions into the room from equipment external of the enclosure such as; valves, flanges, pumps, Intermediate Shredder and Fine Grinder, will be controlled during operation by regular inspections of joints, flanges and seals.

5.0 Operation Control

5.1 System Start-Up

For Normal Start-Up no drums will have been left in the system over night and since under normal operation there will always be two drums in the system at the same time, the first two drums must be handled in the Semiautomatic Mode.
Under these assumptions Start-Up will be executed by setting selector switches for Semiautomatic Mode and turning on disconnect which supplies power to the PLC and pressing the "Purge Start Button" on the cover of the PLC section of the Motor Control Center. This will start purging of panels and then starting of specific motors and scanning push-buttons and limit switches according to the logic in the PLC.
Once the system is started, the operator feeds the first two drums into the unit while in semi automatic mode using the push buttons on Control Panel #2.

5.2 System Shut-Down

System Shut-Downs can be divided into Normal Shut-Down and Abnormal Shut-Downs which in turn can be divide in Emergency Shut-Down and Process Conditions Shut-Down.

5.2.1 Normal Shut-Down

Since no drums are to be left in the system over night, the last drum must be discharged in the Semiautomatic mode.
To discharge the last drum of the day from the system the operator must use the push buttons on Control Panel No.2.
Shut-Down will be executed by pressing the "system stop button" located on the cover of the PLC section of the Motor Control Center.

5.2.2 Emergency Shut-Down

An Emergency Shut-Down can caused by hitting any one of the three "Emergency Stop" buttons which will cut power to the whole system.

5.2.3 Process Conditions Shut-Down

Process condition shut-down may be caused by any process variable exceeding its preset limits such as:

* Temperature greater than 120°F
* Oxygen greater than 5.5%
* Liquid levels either Emergency High or Low
* Waste contents preventing equipment for normal operation such as Coarse or Immediate Shredder shut-down.

When process conditions shut-down occur the audible alarm will sound and the appropriate lights will light on both control panel #2 and #3.

5.3 Control Systems and Operator Responsibility

5.3.1 Control System

The Process Control System is basically comprised of:

Sensors

a) Drum Positioning Actuator Sensors
b) Door and equipment position sensors
c) Process Condition Sensors (Temperature, O_2, Motor, Current etc.)

Logic Unit

A central PLC located in the non hazardous area (M.C.C. Room) which:

Receives input signals from the sensor/transmitter,
Receives signals from the operator control panels,
Performs all logic operations,
Sends output signals to motor starter, hydraulic and pneumatic actuators, and indicator lights.

Control Panels

There are four (4) control panels (CP #1, CP #2, CP #3, CP #4) which display the process status and in which are mounted push buttons for operator control input.

Control Valves

Receive the output signals from the PLC and control actuators, nitrogen supply and motors.

The hydraulic directional valves which control the flow of oil to the actuators (cylinders), which power all drum movement and doors, are pneumatically controlled.

The position switches which sense the position of the actuators and drums are electric (rated Class 1, Division 1) and transmit electric input signals which will be fed to the PLC. The PLC performs all logic operations and sends output signals to control all the hydraulic and pneumatic actuators, motors, displays and alarms.

The output signals which control the hydraulic and pneumatic actuators will be converted by solenoid valves located in Control Panel #2 to pneumatic signals which in turn will operate the directional valves of the actuators.

5.3.2 Control Panel #1 / Forklift Driver

Control Panel #1 is located at the loading point of Roller Conveyor "A" such that the forklift driver, can operate Zone 1 of Roller Conveyor "A".

5.3.3 Control Panel #2 / Drum Processing Operator

The Operator who will be responsible for the movement and preparation of drums before their entry into the enclosure will also be responsible for monitoring the progress of drums through the enclosure, by observing the actuator position lights on the panel. Control Panel #2 is located near the Four Drum Lift.

Control Panel #2 contains the following:

a) Push buttons and actuator position lights for the manual control of incoming drums outside of the enclosure.

b) Door Position, Actuator and Drum Position lights showing drum movement inside the enclosure.

c) Push buttons for the operator control of drum movement inside the enclosure.

Control Panel #2 will also contain a Auto/Semi selector switch so that in case of a problem inside of the enclosure, the semi-automatic mode can be selected and the drum can be moved along by sequentially operating the actuator movement push buttons.

5.3.4 Control Panel #3 / Waste Processing

The Operator is responsible for controlling all the Waste Processing Operations and removing debris.
Control Panel #3 is located next to Control Panel #2 so that the operator may observe all process operating condition lights and alarms.

Control Panel #3 contains:
a) All motor running lights and alarms.
b) All process condition readouts (O_2, Temperature, Vacuum, Current etc.)
c) All liquid level HIGH and LOW lights.

It is the responsibility of the Operator to observe Control Panel #3 and take any corrective action required.

Alarm indicator/control circuits will latch into continuous mode and can only be reset when the alarm condition has been cleared.

5.3.5 Control Panel #4/Drum Feed to Enclosure

Control Panel #4 is located at the loading point of Conveyor 'D/E' and contains one light "Next Drum" and one button "Open Door A". The panel is used by the Operator to load drums into the Enclosure.

5.4 Drum Movement - Automatic Mode

5.4.1 Movement of Drums to Conveyor C

Feeding Drums and Transfer from Conveyors A and A1 to Conveyor B

Conveyor 'A' is an accumulating conveyor with several zones, each zone is equipped with a sensing roller which controls the preceding zone.
The forklift truck operator places two (2) drums in Zone 1 of Conveyor 'A' the leading drum depresses the sensing roller sending the signal Zone 1 is full. The operator backs away from the conveyor and presses button PB1 on Control Panel No.1.

If the sensing roller in Zone 2 is not depressed, indicating the zone is empty, the drums in Zone 1 will automatically move into Zone 2, if the sensing roller in Zone 3 is not depressed the drums will continue to move from Zone 2 to Zone 3 automatically. If Zone 3 is full the drums will stop in Zone 2 when they reach the sensing roller. As soon as Zone 3 is empty Zone 2 will automatically restart and move the drums into Zone 3.

If Zone 2 is full when the forklift truck operator places drums into Zone 1 and presses PB1 the drums will not travel form Zone 1 to Zone 2, however, the PLC will "remember" that PB1 has been pushed and as soon as Zone 2 becomes empty the drums will automatically travel from Zone 1 to Zone 2.

Drums in the last zone of Conveyor 'A' can be transferred to Conveyor 'B' only if the following conditions are met:

* Four Drum Lift Mast is in the lower position
* Conveyor 'B' is empty

Transfer from Conveyor 'B' to Conveyor 'C'

Once Conveyor 'B' is full the operator presses the "Raise Mast" button on control panel #2 and the Four Drum Lift begins upward movement until it reaches the upper elevation matching the elevation of Conveyor 'C', the upward movement of the lift stops and light "Mast Up" on Control Panel #2 is illuminated. Conveyor 'B' will not start to discharge the drums onto Conveyor 'C' until the Drum Processing Operator presses button "Start Conveyor" on Control Panel #2.

After all four drums are discharged from Conveyor 'B' onto Conveyor 'C' the operator presses button "Lower Mast" and the mast returns Conveyor 'B' to its original lower position to restart the sequence.

5.4.2 Drum Preparation and Loading into Enclosure

The Operator prepares the drums for loading into the enclosure. He removes the rings and loosens the lids on open head drums and deheads the closed head drums. The lids themselves remain on the drum until they are placed inside the enclosure.
Once the operator receives the signal that the system is ready to receive a drum "Next Drum" light on Control Panel #4, he presses open Door 'A' button on Control Panel #2 or on Control Panel #4 and the Inlet Door 'A' opens to its upper position, and Conveyor 'D/E' starts. The operator then removes the loose lid and assists the drum onto Conveyor 'D/E'. When the drum is completely inside the enclosure against the inlet pinstops Conveyor 'D/E' stops and Inlet Door 'A' automatically closes.

5.4.3 Inside the Enclosure

After Inlet Door 'A' closes the previously scraped drum is untilted unclamped and bumped and lowered to Conveyor 'D/E'.

Conveyor 'D/E' starts and the inlet pinstops go down. The previously scraped drum is moved from the drum lift position to the drum crushing position stopping Conveyor 'D/E' while the new full drum is moved from the inlet position to the lift position where it is held against the lift position pinstops and Conveyor 'D/E' stops.

5.4.4 Drum Tilting and Scraping

Once the new drum has reached the lift position it is automatically raised into the Drum Clamp and Tilt assembly and securely clamped. The drum is then rotated 105° into the scraping position starting the drum scraping sequence. The anvil and auger cars now start to move, under the action of the main ram cylinders, supporting the base of the drum while forcing the auger and sleeve into the drum. After the auger has reached the bottom of the drum, it dwells at the bottom of the drum for a preset time and then automatically retracts from the drum until the anvil and auger cars have returned to their normal "out of drum" position. The now empty drum is untilted, unclamped and lowered to Conveyor 'D/E' as described above.
If for any reason the auger and sleeve do not reach the bottom of the drum within the allowed time period the drum processing unit stops and signals the operator by illuminating the "Problem Drum" light on Control Panel #2 and on Control Panel #3.

The operator must switch into Semi-automatic and complete the processing of the drum. The operator can either:

* Continue to try and reach the bottom of the drum, or
* Discharge the drum from the system through the use of the push buttons on Control Panel #2

The system will not allow the operator to crush the drum unless he is successful in reaching the bottom of the drum closing.

During the lift, tilt and scrape operation of the new full drum the previously scraped drum now in the crushing position is crushed by the lowering of the platen. And then discharged through Outlet Door 'C'. Outlet Door 'C' automatically opens to crushed drum or full size drum height as required. Once the drum is clear of Outlet Door 'C', it automatically closes. With Door C closed and the present drum in the scraping position (Door B closed) the "Next Drum" light, on CP4 is illuminated signalling the operator to start the sequence once again.

5.5 Nitrogen Addition and Enclosure Vacuum

Nitrogen and Enclosure Vacuum are both continuously controlled automatically. For both of these parameters, operator participation is minimal. N_2 addition is controlled by the automatic opening and closing of the two Nitrogen Control Valves in response to the measured O_2 level and Auger movement.

Adequate vacuum is continually maintained by the Enclosure Fan. Loss of adequate vacuum is signaled by the enclosure vacuum switch and indicator "Vacuum Low".

The Waste Processing Operator will observe Control Panel #3 which displays the levels of O_2 and Vacuum. Operator intervention is not required except in the case of alarms for which he will be trained to respond correctly.

5.6 Temperature Control

The Operator will be trained to observe the four (4) temperature displays and take corrective action.

Under normal operating conditions, temperature rise in both the vapor space and liquid should not be 10-15°F more than ambient and no operator intervention is required.

However, the energy input from the Dispersion blades will result in a slow rise in liquid temperature, if new waste is not added in sufficient quantities or blended fuel is not removed from the Storage Tank, it is possible that liquid and vapor space temperature could reach undesirable levels.

The Operator will be trained to observe temperatures and he will be given a value for safe operating temperature. If temperature exceeds the safe value, he will be expected to take corrective action such as:

a) Inform supervisor
b) Increase feed of new waste
c) Increase flow of recycle liquid (if storage tank liquid temperature is below dispersion tank liquid temperature)
d) Shut off dispersion blade motors if necessary

The temperature, for which the operator is expected to take action will be set at a level below that at which automatic response is initiated.

5.7 Viscosity

Viscosity is not measured directly but will be inferred from the Dispersion Blade Motor and Low Speed Sweep Blade Motor current readings. The operator will be trained to observe the motor current readings and take corrective action.

Experience gained in the field after start up will enable Clear Harbors to develop a rough but adequate correlation between motor current and viscosity.

If motor current exceeds the desired value, the operator will be trained to take corrective action such as:

a) Warn the supervisor
b) Temporarily add low viscosity waste
c) Temporarily desist from the addition of high viscosity waste
d) Increase addition of recycle liquid

Non Responsive

Non Responsive

[redacted]

Non Responsive

Non Responsive

Non Responsive

Non Responsive

Non Responsive

Non Responsive

Non Responsive

Non Responsive

Non Responsive

Non Responsive

Non Responsive

Non Responsive

Non Responsive

Non Responsive

Non Responsive

Non Responsive

Non Responsive

Non Responsive

Non Responsive

Non Responsive

Non Responsive

Non Responsive

Non Responsive

re 1

Limiting Oxidant Concentrations

Table C-1 Limiting Oxidant Concentrations to Prevent Deflagrations of Combustible Gases Using Nitrogen or Carbon Dioxide as Diluents

Gas or Vapor	Limiting Oxidant Concentration N_2/Air Volume % O_2 Above Which Deflagration Can Take Place	Limiting Oxidant Concentration CO_2/Air Volume % O_2 Above Which Deflagration Can Take Place	Reference
Methane	12	14.5	1
Ethane	11	13.5	1
Propane	11.5	14.5	1
n-Butane	12	14.5	1
Isobutane	12	15	1
n-Pentane	12	14.5	1
Isopentane	12	14.5	2
n-Hexane	12	14.5	1
n-Heptane	11.5	14.5	2
Ethylene	10	11.5	1
Propylene	11.5	14	1
1-Butene	11.5	14	1
Isobutylene	12	15	4
Butadiene	10.5	13	1
3-Methyl-1-butene	11.5	14	4
Benzene	11.4	14	1, 7
Toluene	9.5	—	7
Styrene	9.0	—	7
Ethylbenzene	9.0	—	7
Vinyltoluene	9.0	—	7
Divinylbenzene	8.5	—	7
Diethylbenzene	8.5	—	7
Cyclopropane	11.5	14	1
Gasoline			
(73/100)	12	15	2
(100/130)	12	15	2
(115/145)	12	14.5	2
Kerosene	10 (150°C)	13 (150°C)	5
JP-1 fuel	10.5 (150°C)	14 (150°C)	2
JP-3 fuel	12	14.5	2
JP-4 fuel	11.5	14.5	2
Natural gas (Pittsburgh)	12	14.5	1

Gas or Vapor	Limiting Oxidant Concentration N_2/Air Volume % O_2 Above Which Deflagration Can Take Place	Limiting Oxidant Concentration CO_2/Air Volume % O_2 Above Which Deflagration Can Take Place	Reference
n-Butyl chloride	14	—	3
	12 (100°C)		3
Methylene chloride	19 (30°C)	—	3
	17 (100°C)		3
Ethylene dichloride	13	—	3
	11.5 (100°C)		3
1,1,1-trichloroethane	14	—	3
Trichloroethylene	9 (100°C)		3
Acetone	11.5	14	4
n-Butanol	NA	16.5(150°C)	4
Carbon disulfide	5	7.5	4
Carbon monoxide	5.5	5.5	4
Ethanol	10.5	13	4
2-Ethyl butanol	9.5 (150°C)	-	4
Ethyl ether	10.5	13	4
Hydrogen	5	5.2	4
Hydrogen sulfide	7.5	11.5	4
Isobutyl formate	12.5	15	4
Methanol	10	12	4
Methyl acetate	11	13.5	4
Propylene oxide	7.8	—	4
Methyl ether	10.5	13	4
Methyl formate	10	12.5	4
Methyl ethyl ketone	11	13.5	4
uDMH (dimethylhydrazine)	7	—	6
Vinyl chloride	13.4	—	7
Vinylidiene chloride	15	—	7

NOTE 1: See 2-7.2 for the required oxygen level in equipment.
NOTE 2: Data were determined by laboratory experiment conducted at atmospheric temperature and pressure. Vapor-air-inert gas samples were placed in explosion tubes and ignited by electric spark or pilot flame.

PRELIMINARY

bove Data taken from: NFPA 69 Explosion Prevention Systems 1992

[Revised 12/23/92]

APPENDIX D-12

PROFESSIONAL ENGINEER PE) ASSESSMENT AND CERTIFICATION OF THE DESIGN OF PROPOSED/MODIFIED TANK STORAGE SYSTEM

Clean Harbors
ENVIRONMENTAL SERVICES, INC.
1200 CROWN COLONY DRIVE, P.O. BOX 9137 • QUINCY, MA 02269-9137
(617) 849-1800

July 15, 1994

Permit Section, RCRA Unit
Division of Land Pollution Control
Illinois Environmental Protection Agency
P.O. Box 19276
Springfield, IL 62794-9276

RE: Clean Harbors of Chicago, Inc.
11800 S. Stony Island Avenue
Chicago, IL 60617
Revised Part B Permit Application

Dear Sir or Madam:

Please refer to: 0316000051 - Cook County
Clean Harbors of Chicago, Inc.
ILLD000608471
RCRA Permit Log No. 16
RCRA Permit File

I, being a registered professional engineer in the State of Illinois, hereby certify that I have conducted an assessment of design for the modified ignitable bulk liquid storage tanks as they are listed in Table D-5 of Volume I, Part B License Application:

1) I have reviewed the Tank Assessment Report prepared by Alpha Consultants Ltd. dated January, 1990 and concur with their findings that the tanks are structurally sound for their usage of ignitable waste storage. I further certify that all ancillary equipment will be constructed and installed according to ANSI/ASME B31.3-1987, Chemical Plant and Refinery Piping. See attached Alpha report for tank assessment.

2) The certification for the design of tank foundation, effect of frost heave on foundations, and structural integrity of the secondary containment for the tank is provided by Hoyer-Schlesinger-Turner and included in Appendix D-26.

3) The secondary containment will be provided with 30-40 mils thick vinylester base coating, Proctor-Coat 900 as manufactured by Dudick Inc. or equivalent.

CleanHarbors

4) All ignitable bulk liquid storage tanks, items 158 & 159 as listed in Table D-5 are installed above ground on concrete foundations. No tank component will be in contact with soil or water.

5) All ignitable bulk liquid storage tanks, items 158 & 159 as listed in Table D-5 are installed above ground on concrete foundations. Tanks will not be subjected to loadings caused by vehicular traffic.

6) The materials of construction for the tanks and ancillary equipment are compatible with the hazardous wastes intended to be stored/processed.

I certify under penalty of law that this document and all attachments were prepared under my direct supervision and in accordance with systems designed to assure that qualified personnel properly gather and evaluate the information submitted. Based on my inquiry of the person or persons directly responsible for gathering the information, the information submitted is, to the best of my knowledge and belief, true, accurate and complete. I am aware that there are significant penalties for submitting false information, including the possibility of fines and imprisonment for knowing violations.

Respectfully submitted,

CLEAN HARBORS ENVIRONMENTAL SERVICES, INC.

Bhupendra Patel
Licensed Professional Engineer
Illinois No. 062-048690
My License Expires on 11/30/94

Attachment

Bhupendra Patel

RCRA TANK ASSESSMENT
TANK FARM SYSTEM

PREPARED FOR

CWM CHEMICAL SERVICES, INC.
CHICAGO INCINERATOR
CHICAGO, ILLINOIS

PREPARED BY
ALPHA CONSULTANTS, Ltd.
ELMHURST, ILLINOIS

JANUARY 1990

FILE NO. 8926

TABLE OF CONTENTS

No.	Section	Page
I	INTRODUCTION	1
	1. General	1
	2. Scope	2
II	DESIGN STANDARDS	3
	1. Tanks	3
	2. Ancillaries	4
	3. Foundations, Platforms, Gratings, Etc	5
	4. Conclusions	5
III	HAZARDOUS CHARACTERISTICS OF THE WASTES	6
	1. Waste Streams	6
	2. Characterizing the Waste Streams for Acceptability	6
	3. Conclusions	8
IV	CORROSION PROTECTION MEASURES	9
	1. Visual Inspection	9
	2. Conclusions	10
V	TANK SYSTEM AGE	11
VI	TANK SYSTEM INSPECTION	12
	1. Visual Inspection of Tanks	12
	2. Visual Inspection of Ancillaries	13
	3. Conclusions	14
VII	SUMMARY	15
VIII	CERTIFICATION	16

TABLE OF CONTENTS (Cont'd.)

APPENDICES & DRAWINGS

APPENDIX A

CWMCS's Request for Proposal, dated 11/20/89
Resumes of ACL Key Technical Personnel

APPENDIX B

Table No. 1 (Tanks) & No. 2 (Pumps)
UL-142 Standard, Pages 5, 17 and 18
Imperial Steel Tank Co. Application to UL
Review of Strainer-Residue Tank
Pump Curves
Pump Bulletin
Foundation and Support Column Design-Review Notes
Soils Report

APPENDIX C

Checklists of Visual Inspection of Unlined Vessels
Ultrasonic Measurements Reports
Information on Ultrasonic Device Used in the Project

FIGURES

No.	Title
TA-1	Caisson Details
TA-2	Fabrication Det'ls Tank Nos. T-102 - T-104 Sht. 1
TA-3	Fabrication Det'ls Tank Nos. T-101 - T-104 Sht. 2
TA-4	Fabrication Det'ls Tank Nos. T-102 - T-104 Sht. 3
TA-5	Fabrication Det'ls Tank No. T-101 Sht. 4
TA-6	Fabrication Det'ls Tank No. T-101 Sht. 5
TA-7	Platform & Stairways-Steel
TA-8	Pipe Supports & Grating-Steel
TA-9	Pipe Supports & Grating-Steel
TA-10	Pipe Supports & Stair-Steel

I. INTRODUCTION

1. General

CWM Chemical Services, Inc. (CWMCS) currently operates a hazardous waste incinerator under interim status at 11700 So. Stony Island Aveune, Chicago, Illinois. Alpha Consultants, Ltd. (ACL) was retained by CWMCS to perform an assessment of their hazardous waste tank farm system as required by Title 35 of the Illinois Administrative Code (IAC), Sections 724.291 and 724.292.

The tank farm includes twelve (12) existing hazardous waste storage and/or fuel tanks and two (2) proposed hazardous waste storage tanks, one (1) existing Strainer-Residue Storage Tank, plus ancillaries including pumps, piping, valves, supports, observation platforms, concrete walls for secondary containment and a pipe support bridge to the incinerator, see Fig. No. B.1-2 in Section B of the Application. The material to be incinerated includes hazardous organic wastes (at times containing PCB's), non-hazardous organic material, NFPA rated Class II and Class III flammable liquids and aqueous wastes containing organic contaminants, see Section III of this report. The majority of the waste to be processed is received by the plant in tank trucks or rail cars. The remainder of the materials, stored in the tank farm, are received in containers and pumped to the storage tanks. Stormwater, collected in the tank farm, is also stored in the tanks prior to incineration. Upon arrival at the site, the hazardous waste manifests are reviewed and samples are taken for receipt analysis in accordance with the CWMCS's Waste Analysis Plan. The tank and/or rail car liquid wastes are unloaded directly into one of the aforementioned storage tanks. The newly received wastes must be compatible with the contents of the tank to which it is added and to the material of construction in the tank farm.

Ten (10) existing storage tanks have a nominal capacity of 136,000 gallons (176,000 gallons in the future) and two (2) fuel tanks have a capacity of 24,000 gallons. Hazardous waste in combination with the fuel and diesel oil, stored also on the site, are used in varied amounts in the incineration process. Residue in the form of ash is disposed of at a remote hazardous waste landfill. Receipt of materials for incineration occurs during the normal 40 hour work-week with the incinerator operating continously seven days a week, 24 hours per day.

INTRODUCTION (Cont'd.)

2. Scope of the Assignment

The scope of services for this project was set forth in CWMCS's Request for Proposal, dated November 20, 1989, a copy is included in Appendix A. ACL's assignment commenced in November, 1989 and was completed in late January, 1990. Resumes of the key technical people employed by ACL on this assignment are also included in Appendix A.

Review of the proposed Sludge Unloading and Feed System Storage Tank, which will be located in an area remote from the tank farm, was included in the scope of this assignment.

II DESIGN STANDARDS

1. Tanks

Tank Nos. T-101 through T-112 were designed in 1980; proposed Tank Nos. T-099 and T-100 are identical in design to Tank No. T-111. The design drawings for these tanks are Figures Nos.D.2-4 through D.2-9 and D.2-9A (see Section D.2 of the Application). The proposed Sludge Unloading and Feed System Storage Tank was designed in 1983, see Fig. No. D.2-26. As indicated on these drawings, the tanks were and will be fabricated in accordance to the applicable Underwriter Laboratory, Inc. Standards (as required by the City of Chicago Building Code). The applicable standard being ANSI/UL-142 "Standard for Steel Aboveground Tanks for Flammable and Combustible Liquids". One exception to this standard was required to be made by the fabricator of the tanks; this exception is indicated on Page 5, GENERAL-1. Scope of the Standard, which states:

> "1.4 These requirements do not cover vertical tanks that are elevated by means of legs or a supporting skirt."

A copy of this page of the Standard is included in Appendix B as well as Pages 17 and 18 indicating minimum thicknesses for vertical tanks fabricated from carbon and stainless sheet steel. Tabulated below are excerpts of these minimum thicknesses and those thicknesses employed by CWMCS for the various tanks.

CARBON STEEL TANKS OVER 1100 GALLON CAPACITY

	Thickness In Inches		
	Shell	Bottom	Top
UL-142	0.167	0.240	0.123
CWMCS	0.313	0.375	0.250

STAINLESS STEEL TANKS OVER 1100 GALLON CAPACITY

	Thickness In Inches		
	Shell	Bottom	Top
UL-142	0.115	0.158	0.086
CWMCS (1)	0.313	0.375	0.250
CWMCS (2)	0.313	0.438	0.313

(1) All tanks fabricated of stainless steel except Tank No. T-101.
(2) Tank No. T-101

II DESIGN STANDARDS (Cont'd.)

1. Tanks (cont'd.)

Discussions with the fabricator of Tanks Nos.T-101- T-104 indicated that in cases where minor deviations to the Standard were required to obtain a UL label, a copy of the plans (see Fig. Nos. TA-2 through TA-6) with a request for approval would be submitted, and if satisfactory to UL written approval was obtained. A copy of the documentation obtained from the fabricator, Imperial Steel Tank, Co., is included in Appendix B.

No fabrication drawings were found for the earlier fabricated tanks (Tank Nos. T-105 through T-112). However, with (1) the designs being identical (as shown on Fig. Nos. D.2-4 through D.2-9 and (2) the ultrasonic test results indicating that the actual metal thicknesses agree with those shown on the drawings (see Appendix B), we conclude that these tanks meet the design standard of UL-142. Table No. 1 in Appendix B, is a summary of the material of construction, capacities, dimensions, type of material stored, and critical thicknesses (both design or fabricated and measured) of the twelve (12) existing tanks and the three (3) proposed tanks. Note that the future tanks will be fabricated in accordance with UL-142.

Since no published standard is available for the design of the Strainer-Residue Tank, see Fig. No. D.2-9B. ACL completed a detailed review of this fabricated steel tank; this review is included in Appendix B.

2. Ancillaries

ACL has completed a comprehensive inspection of the ancillaries in the tank farm system. This visual inspection was based on conformance to ANSI/ASME Code B31.3,"Chemical and Petroleum Refinery Piping". The items reviewed included the following:

1. Tank appurtenances
   - Level sensors
   - Fill pipes and striker plates
   - Means of venting
2. Tank farm makeup
   - Pumps
   - Piping
   - Flanges, welding, and couplings
   - Valves
3. Safety cutoffs for tanks and pumps

All the above conformed to the aforementioned standard, or if not covered by the Standard by normally applicable good engineering practice.

II DESIGN STANDARDS (Cont'd.)

2. Ancillaries (cont'd.)

Table No. 2 included in Appendix B is a compilation of the pumps in the tank farm including their capacities, manufacturer and model, type of pump, etc. The location of the pumps is shown on Fig. No. D.2-2 and their application on Fig. Nos.D.2-14 through D.2-20 and D.2-20A. Included in Appendix B are the pump curves and a copy of the applicable pump bulletin.

3. Foundations, Platforms, Gratings,Etc.

Design standards for the secondary containment walls, tank foundations, platforms, gratings and other structural and miscellaneous metal components conformed to the City of Chicago Building Code or good engineering practice. This Building Code includes the following applicable sections:

- .Hazardous Use Units
- .Miscellaneous Buildings and Structures
- .Fire-Resistive Requirements
- .Minimum Design Loads
- .Materials, Methods and Tests
- .Foundations
- .Concrete Construction
- .Safety Requirements
- .Flammable Liquids

Fig. Nos. D2-10 through D.2-12, D.2-21 and D.2-25 are typical examples of the foundation and concrete work. Note that the tanks' columns are supported by either piles or caissons (for the latter, see Fig. No. TA-1). PVC waterstops are used to prevent any hazardous waste from entering the ground in case of a spill or tank failure. This practice is illustrated in the OSWER Policy Directive No. 9483.00-1 "Technical Resource Document for the Storage and Treatment of Hazardous Waste in Tank Systems". Included in Appendix B are critical foundation design review notes prepared for the concrete work in the area as well as the steel columns used to support the larger tanks (Tank Nos.T-111 and T-112). Fig. Nos. TA-7 through TA-10 illustrate the steel platform, grating, support structure, and stairway utilized for access to the top manhole, mixers and instrumentation.

3. Conclusions

The tank farm meets all the applicable design standards or if no published standard is applicable the equipment and installation meets normal good engineering practice.

III HAZARDOUS CHARACTERISTICS OF THE WASTES

1. Waste Streams

Waste streams accepted by the Chicago Incinerator for tank storage include liquids and sludges, as well as inorganic streams which have been contaminated by organics. These waste streams generally include a broad spectrum of inorganics and organics, as follows:

- .Ignitables
- .Corrosives
- .EP Toxic Wastes
- .Halogenated Solvents
- .Non-halogenated Solvents
- .Metal Treating Processes Wastes
- .Organic Chemical Production Wastes
- .Petroleum Refining Wastes
- .Iron and Steel Processing Wastes
- .Ink Formulation Wastes
- .Commercial or Chemical Manufactured Products or Off-Specification Products
- .Polychlorinated Biphenyls and PCB Contaminated Transformer Oils

2. Storage of Wastes

Liquid wastes, as noted previously, are delivered to the site in bulk form i.e. tank trucks or railroad tank cars or pumped from drums. These streams are placed in bulk storage tanks prior to disposal by incineration. The storage tanks are designed to store and handle both NFPA rated Class II and III flammable and toxic liquids, including PCB bearing liquids. The tanks, in the tank farm, that are typically used for storing aqueous or other wastes with low heating values are Tank Nos. T-106 and T-108. If a very large volume of rainwater has been collected at the site, Tank Nos. T-105, T-111 or T-112 can also be used to store lean water.

3. Characterizing the Waste Streams for Acceptability

In accordance with IAC Section 324.113(b)(5), a pre-existing waste characterization is supplied to CWMCS by the waste generator on the "Generator's Waste Material Profile Sheet" (WPS, Fig. No. 4-1 in the Waste Analysis Plan) or an equivalent form.

III HAZARDOUS CHARACTERISTICS OF THE WASTES (Cont'd.)

3. Chacterizing the Waste Streams for Acceptability (cont'd.)

As part of the waste stream approval process, the CWMCS Technical Manager and/or the Laboratory Manager determines if the waste stream is compatible with the facilities' tank system and/or potential storage containers. Data to make this determination is obtained from the latest edition of the "Chemical Engineers Handbook", the National Association of Corrosion Engineers (NACE) literature, or other available technical references, in accordance with OSWER 9483.00-1, Section 4.1. Any restrictions, based upon the determination are noted in the waste stream approval. To verify this determination, the wastes are required to undergo a pH screening upon arrival at the site. If the received waste is not in an aqueous solution, a ten (10) percent aliquot of the liquid in solution with water is analyzed for pH.

After evaluating the data supplied by the Generator and the data obtained from a Pre-Acceptance Mandatory Analyses, CWMCS ascertains the acceptability of the waste based upon: (1) the permit conditions and (2) the availability of proper waste management techniques and operational conditions required to properly store and process the waste.

IAC Section 723.114 stipulates that each shipment of waste upon arrival at the facility must be inspected, sampled and analyzed as described in CWMCS's Waste Analysis Plan (WAP) prior to initiation of any activity. Therefore, before any wastes are stored, the Management is required to assess the compability of the waste with (1) the storage unit materials of construction and (2) the wastes presently being stored. No tank truck or railcar is unloaded or tank-to-tank tansfer is permitted until (1) an analysis is conducted, in accordance to the WAP, (2) the Operating Supervisor selects a tank to off-load the waste and (3) the Operating Supervisor gives approval to the proposed unloading plan.

Prior to transferring any waste into a storage tank, the compatability of the waste with the liquid already stored in the tank and the material of construction of the tank farm must be ascertained by CWMCS Management. This is completed by first reviewing the pre-acceptance evaluation and performing a Liquid Waste Compatibility Test. This test is perfomed by mixing an equal volume of the waste with the blending material. The mixture is vigorously mixed for thirty (30) seconds and then visually inspected for a reaction, i.e. gas evolution or bubbling, precipitation of solids, polymerization and/or heat generation. If it does not display any of the above reactions, the waste is approved, and the material is considered to be compatible with the storage tank contents.

III HAZARDOUS CHARACTERISTICS OF THE WASTES (Cont'd.)

4. Conclusions

Based upon the practices that CWMCS employs in handling new shipments of wastes, it is ACL's considered professional opinion that the entire tank farm is protected from deterioration by contact from newly arrived wastes or blending of the new and previously held wastes. This conclusion is based on ACL's knowledge of the materials of construction and the procedures of operation.

IV CORROSION PROTECTION MEASURES

1. Visual Inspection

ACL conducted a visual inspection of the tank farm system on January 3, 1990 in accordance with the protocal established by applicable portions of Section 5.4.1 of OSWER 9483-00-1. Items F and G of this section (that covers tanks which are presently buried or being buried) pertains to the influence of piping of dissimilar materials, as well as the existence of dielectric conditions. Besides this protocal, ACL utilized their expertise with similar facilities located in the same environment in this area and good engineering practice. Further, the inspection was made to assess any corrosion that was caused by atmospheric conditions which could cause the moisture to penetrate the insulation and/or its weatherproof covering.

The entire tank farm was found to meet local Chicago standards for corrosion protection. All tanks, piping, valves, pipe supports, structural and miscellaneous metals were protected utilizing state-of-the-art materials for this type of construction. Structural components were protected form the environment where the possibility existed for it to cause a problem. No visual signs were found to indicate the use of dissimilar metals that required dielectric protection. Minor problems encountered were as follows:

1. In order to install agitators in Tank Nos. T-101 - T-104 sections of the top stainless steel cladding and insulation were removed. This may have allowed rainfall to collect and in some cases penetrate beneath the remainder of the insulation. Some superficial corrosion was encountered. These areas require that the minor rust be removed using wire brushes, primed, repainted, and the insulation and cladding reinstalled where necessary. ACL was informed that this work has been contracted out and would be completed in the near future.

2. The pipe insulation on a few pipelines beneath the tanks in the tank farm appear to have been stepped on and some ice had fallen on from above. These two problems have caused some stainless steel jacket above the insulation to open or loosen. When discussed with CWMCS, they responded that any damaged jacketing or insulation would be repaired or replaced as part of the routine maintenance activity in the tank farm.

IV CORROSION PROTECTION MEASURES (Cont'd.)

1. Visual Inspection (cont'd.)

3. Two elbows on top of the tanks had a slight amount of corrosion. Ultrasonic tests at these points indicated no loss of metal. The same problem exists at the Strainer-Residue Tank. ACL was informed that these conditions were being monitored and would be addressed as part of routine maintenance activities.

During the visual tests, the operation of the Strainer-Residue Tank was observed. It was found that the employment of deflection or striker plates were unecessary; the possibility of causing or reducing corrosion would not be affected by these plates.

2. Conclusions

The tank farm system including its supports, grating, structural and miscellaneous steel appear to be relatively free from corrosion. However, ACL recommends that regular inspection of the metal parts be made as part of routine maintenance.

V TANK SYSTEM AGE

Tank Nos. T-105 through T-112 were fabricated and installed in the period between June, 1981 and November, 1981. It is asssumed that the ancillaries were installed at the same time. The more recent tankage were fabricated by Imperial Steel Tank Co. and installed in the period between October and December, 1986. As previously assumed the system was installed at the same time. The Strainer-Residue Tank (T-116) was installed in November, 1985; with fabrication just prior to that date.

VI TANK SYSTEM INSPECTIONS

1. Visual Inspection of Tanks

ACL completed a visual inspection program of the Chicago Incinerator tank farm system during the period from December 4, 1989 through January 5, 1990. This inspection was in accordance with Title 35 of the IAC 724.291 (b)(5)(B). Due to CWMCS's inability to take Tank No. T-110 out of service prior to the end of January its internal inspection will be completed at that time, and this report supplemented.

Three (3) alternate procedures for inspecting the inside of the tanks were employed. The first method, was used for Tank No. T-103, it utilized a hand operated winch, located above the manhole opening on top of the tank, to raise and lower a technician in the tank while inspecting the inside. A second technician entered the tank prior to any winch operation. He acted both as an inspector and as a safety person. The conical bottom of the tank was carefully scraped clean, if residue was found, for inspection purposes. The supervisory engineer was called to inspect if anything questionable was encountered.

The second method employed was used for Tank Nos. T-101, T-102 and T-104. Tank entry was made through the side manhole of each tank. One technician climbed the tank walls using the tank baffles as a ladder, while another technician provided safety backup. If residue was present, it was scraped clean to provide for inspection. In all inspections, tank residues were only observed at the bottom of the tank. A supervisory engineer was on hand at all times if suspicious observations were found.

A third method was employed for remaining tanks having no baffles (Tank Nos. T-105 through T-112). The two technicians entered the tanks for inspection purposes with the supervisory engineer called if problems were observed.

In all three methods, personnel were equipped with (1) explosion proof flashlights, (2) intrisically safe equipment, (3) special respirators with air obtained from hoses connected to cylinders outside the secondary containment walls of the tank farm for those entering the tanks, (4) "saranex tyvek" suits, (5) neoprene gloves, and (6) other safety apparel. It should be noted that prior to entry the tank manholes were opened on top as well as the side for an extended period of time, the tanks internal atmosphere measured utilizing a pre-calibrated vapor-monitoring device, and the tank top inspected. Suspicious areas were noted and later ultrasonic measurements taken. In all cases, these areas were located on the underside of the tank tops where the lighting was poorest. Results were recorded on the "Checklist for Visual Inspection of Unlined Vessels" included in Appendix C. The Strainer-Residue Tank (No. T-116) was inspected and ultrasonic measurements taken.

VI TANK SYSTEM INSPECTIONS Cont'd.)

1. Visual Inspection of Tanks (cont'd)

As noted above when visual tests proved suspicious ultrarasonic measurements were taken. They are recorded and included in Appendix C. Appendix C also includes the records of ultrasonic measurements taken in August, 1989. The results indicate satisfactory results in any of the suspicious areas or in other thicknesses readings. A copy of the information relating to the operation of the ultrasonic measuring device used in the second series of tests is included in Appendix C.

2. Visual Inspection of Ancillaries

During the above noted period, ACL conducted visual inspection of the entire tank system area. This inspection was made using the two listed chapters of the API standard as a guide.

> "Guide for Inspection of Refinery Equipment," Chapter XI-Pipe, Valves & Fittings and Chapter XIII-Atmospheric and Low Presssure Storage Tanks

The following observations were made:

1. No leaks were found in process piping. The only problem found was steam condensing out of quick-disconnects.
2. In this inspection, the following were found:
   - .Pipes were not misalignments
   - .Supports were not dislodged
   - .Tank walls were all aligned
   - .Pipe supports were plumb
   - .Pump base plates had not shifted
   - .Foundation bolts were all in place
   - .Where piping was attached to pumps, there weren't any cracks in the pump casings
   - .All pipe hangers, anchor bolts and other supports were in place and in good shape.
3. Detailed review of pipe supports indicated:
   - .Protective pipe cladding in good condition
   - .No evidence of corrosion. Some ice was found on supports formed from the steam condensate noted above
   - .No distortion, damage or deterioration of steel platforms, gratings, pipe bridge or concrete

VI TANK SYSTEM INSPECTIONS (Cont'd.)

2. Visual Inspection of Ancillaries (cont'd.)

The following observations were made (cont"d.):

3. Detailed review of pipe supports indicated (cont'd.):
   .Brackets, beams and pipe hangers were all secure
4. All accessible valves, fittings, flanges were inspected as well as areas that had the insulation removed. No cracks, pitting or corrosion were found.
5. The pumps were inspected during operation. No seals leakage or pipe, valve or pump vibration was observed.

3. Conclusions

Visual inspections of the entire tank farm by ACL indicated satisfactory conditions. Suspicion of metal loss, in the tanks, was not confirmed by the ultrasonic measurements.

Title 35 of the IAC Section 724.292 required that effective August 4, 1987, all new tanks placed in service after July 14, 1986 required an inspection by an independent registered engineer. This was not completed for Tank Nos. T-101 through T-104. Installation of these tanks commenced October 1986, see Section V. Based on the results of the visual inspection, we conclude that these tanks were installed correctly, operated as intended, are in excellent condition, and are not leaking and therefore, this requirement has been fulfilled.

VII SUMMARY

ACL's findings regarding the CWMCS Chicago Incinerator tank farm are summarized below. The tank farm:

1. Meets all applicable published design standards or good engineering pactice.

2. Employs practices in handling new shipments of wastes that protects the tank farm from deterioration from (1) blending of the new material with the previously held waste and (2) the new waste with the existing material of construction.

3. Is substantially free from corrosion of its major components and ancillaries.

4. Meets all standards used as guides for visual inspections. Included are the tanks, piping, valves, pumps, supports, observation platforms, and containment walls.

VIII CERTIFICATION

I certify, under penalty of law, that this document and all attachments were prepared under my direction or supervision in accordance with a system designed to assure that qualified personnel properly gathered and evaluated the information submitted. Based on my inquiry of the person or persons who managed the systems, or those persons directly responsible for gathering the information, the information submitted is, to the best of my knowledge and belief, true, accurate, and complete. I am aware that there are significant penalties for submitting false information, including the possibility of fine and imprisonment for knowing violations.

Harris E. Dicker, P. E.
Illinois License No. 062-025375

HARRIS E. DICKER
25375
REGISTERED
PROFESSIONAL
ENGINEER
OF
ILLINOIS

Harris E Dicker

APPENDIX D-13

CONSTRUCTION DETAILS FOR EXISTING
WASTE RECEIVING TANKS

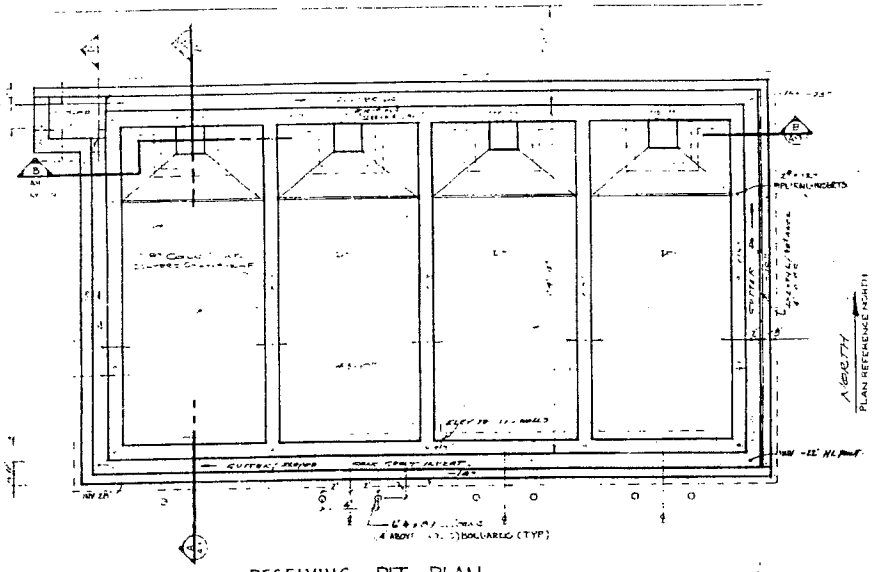

RECEIVING PIT PLAN

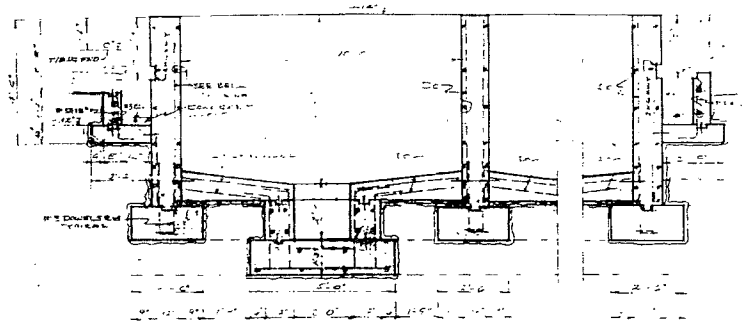

SECTION THRU PIT

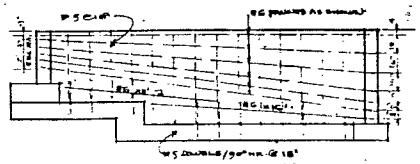

N-S WALL REINF

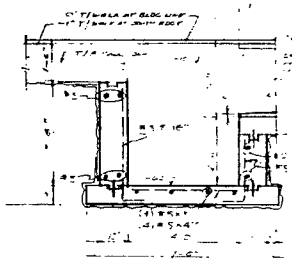

SECTION THRU SUMP

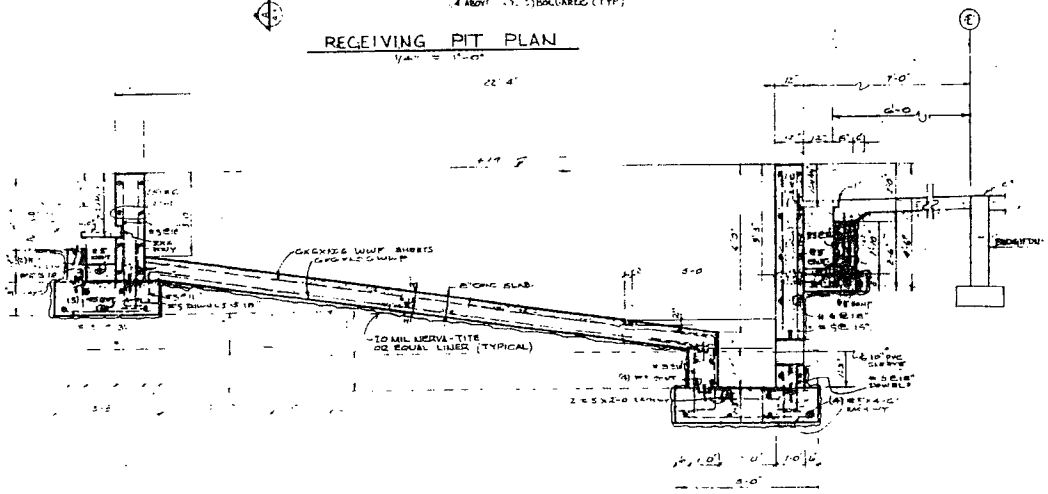

SECTION THRU PIT

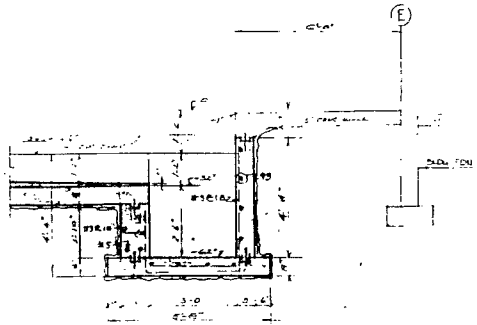

SECTION THRU SUMP

PART-B 380

APPENDIX-D 6

ILD000608471

NOTES:

CONC. - SEE LETTER I THRU IB SHT A-6

EXCAVATION - SEE NOTES 1 THRU 5

RECEIVING PIT CHEM CLEAR

NO	REVISION	CHECK	DATE
0	[illegible]		
1	ADDED LINER		
2	[illegible]		
3	[illegible]		

MORLEY

R.A. MORLEY CO., INC.
3223 ARNOLD LANE
NORTHBROOK IL [illegible]
312-291-8050

PROJECT No. 1902

DATE 9-2-86

DRAWING No. A9 4032-0

APPENDIX D-14

CONSTRUCTION DETAILS FOR EXISTING
BULK STORAGE TANKS

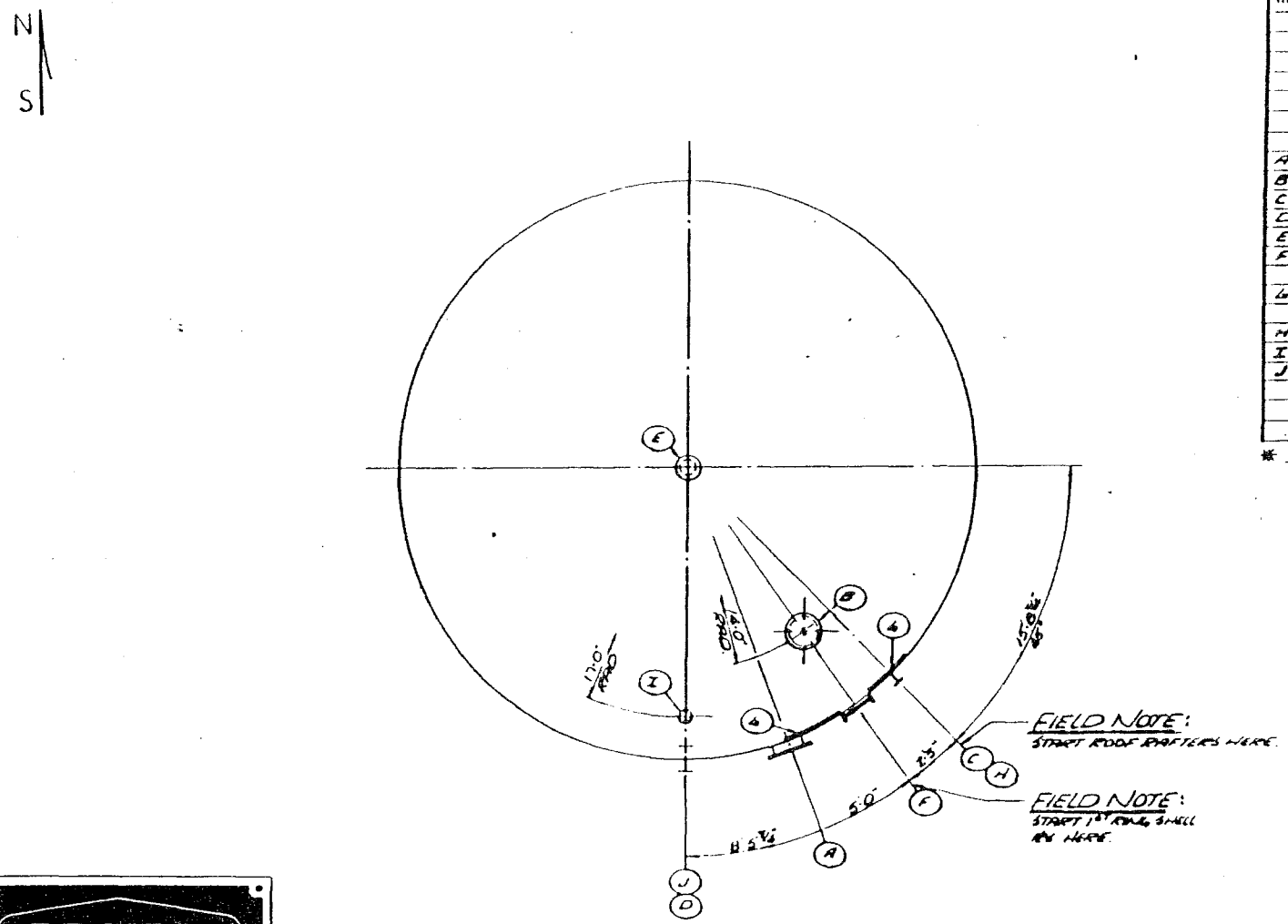

EFFLUENT HOLDING
TANK 1ST

LIST OF DRAWINGS & FITTINGS

ITEM	QUAN	DESCRIPTION	ELEV	DRG.
		BOTTOM 1/4" LAPWELDED	—	AA-4072
		SHELL- BUTT WELDED	—	S 3969
		ROOF 3/16" LAPWELDED	—	AC-4072
		ROOF STRUCTURAL	—	S 3970
A	1	24" SHELL MANWAY	2'-6"	A7806
B	1	24" ROOF MANWAY	—	RM-24
C	1	6" SHELL NOZZLE	1'-0"	A7808
D	1	6" SHELL NOZZLE	18'-0"	A7808
E	1	10" MUSHROOM VENT	—	A5217
F	1	EXTERIOR LADDER	—	A7808
G	2	6'-0" SECTION OF ROOF HANDRAIL	—	A2095
H	3	6" SHELL NOZZLE	*	A7808
I	1	6" ROOF NOZZLE	—	A7545
J	1	6" DBL. FLG SHELL NOZZLE	1'-0"	A7546
		FIELD NOTES	—	AN 8080
		PRAIRIE TK NAMEPLATE		

* 5'-0", 10'-0" & 15'-0"

PRAIRIE
TANK & CONSTRUCTION Co.
PLAINFIELD, IL — PELL CITY, AL
YEAR BUILT 1981 — CONTRACT NO. 8080
CAPACITY 188,000 GALS.
DIA 40'-0" HEIGHT 20'-0"
CODE AWWA D-100

LOCATE NAME PLATE & BRACKET ON SHELL MANWAY REINF. ℄ ON VERT. ℄ ABOVE SHELL OPENING.

1. All elevations are taken from top side of bottom plate at shell to horizontal center line of connection.
2. All arc dimensions are measured on outside of shell. 1st ring.
3. All roof connections are located to center line of connection on slope unless shown otherwise.
4. Due to normal shop and field tolerances, dimensions to tank connections are approximate. Purchaser to make provisions for field fit in connecting piping.

GENERAL NOTES

BOTTOM & ROOF	A285-C
SHELL	"
REINFORCING PLATE	"
NOZZLE FLANGES	A105
NOZZLE NECKS	A36
BOLTS & NUTS	A325
GASKETS	NEOPRENE RS 8706

MATERIAL SPEC. (UNLESS NOTED OTHERWISE ON DETAIL DRAWING)

REV	DATE	DESCRIPTION
2	11/17/80	CHG'D GASKET MAT'L
1	11/10/80	ADD ORIEN. & NOZZLES

CHICAGO

PRAIRIE
TANK & CONSTRUCTION CO
PLAINFIELD, IL
PELL CITY, AL

ERECTION DRG. FOR A 40'-0" ϕ x 20'-0" HIGH CONE ROOF TANK
FOR: CHEM-CLEAR INC.
AT: SOUTH CHICAGO, IL.

SCALE 3/16" = 1'-0" — DRAWN BY TK — DATE 11/12/80 — CKD BY — E-8080-B

BILL OF MATERIAL

ITEM	QUAN.	DESCRIPTION	MATL	WT
A1	4	SK. RPD 1/4 x 2 RPD 1/4 - 72" - 240"	A283C	2448
A2	4	SK. RPD 1/4 x 2 RPD 1/4 - 72" - 360"	"	3672
A3	4	SK. RPD 1/4 W ITEM A2		
A4	2	SK. RPD 1/4 W ITEM A2		
A5	2	RECT. RPD 1/4 - 72" - 240"	A283C	2448
A6	2	RECT. RPD 1/4 - 72" - 360"	"	3672
A7	1	RECT. RPD 1/4 - 72" - 900"	-	1650
		ORDER		
	4	RPD 1/4" - 72" - 240"		
	1	RPD 1/4" - 72" - 900"		
	4	RPD 1/4" - 72" - 360"		

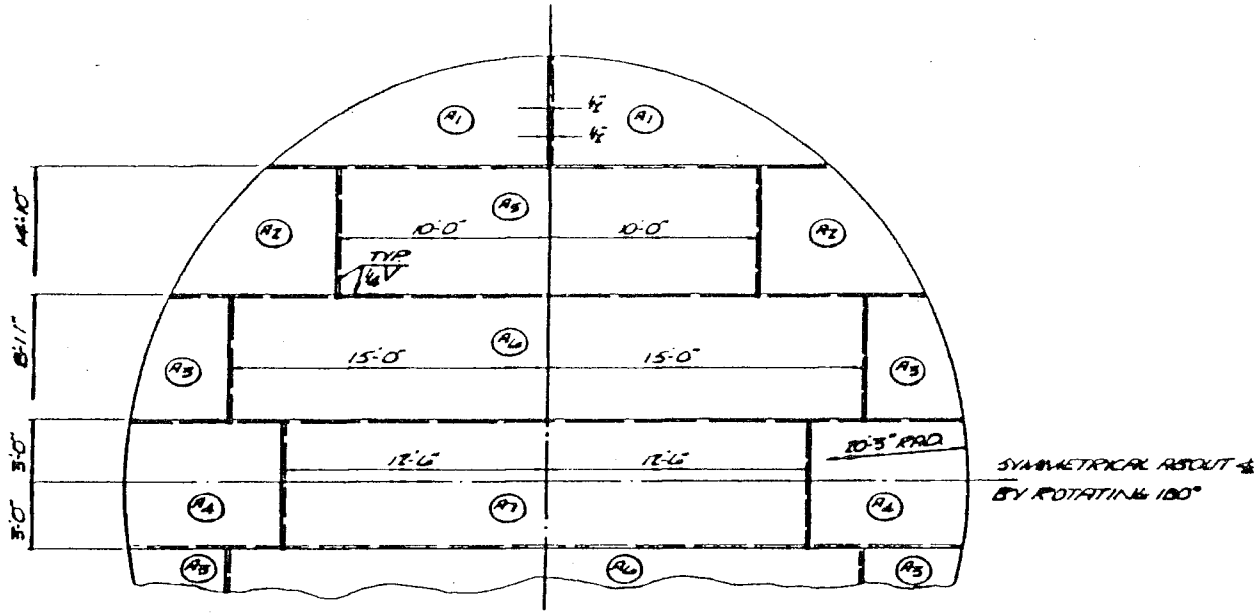

PARTIAL PLAN VIEW OF BOTTOM

GENERAL NOTES:

1. CUT ALL SKETCH R'S TO A 10'-3" RAD.
2. ALL LAPS TO BE 1" MIN.
3. LINEAL FT. OF LAPWELD - 274'

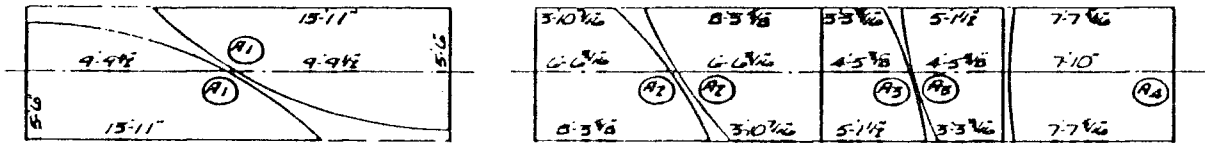

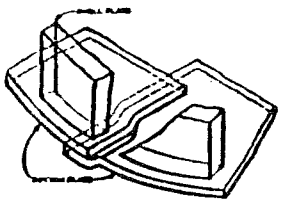

METHOD FOR PREPARING LAP-WELDED BOTTOM PLATES UNDER TANK SHELL.

REV.	DATE	DESCRIPTION

CHICAGO TANK #1

PRAIRIE TANK & CONSTRUCTION CO.

PLAINFIELD, IL
PELL CITY, AL

BOTTOM FOR A 40'-0" ⌀ TANK

SCALE 1/4" = 1'-0" | DRAWN BY TK | DRAWING NUMBER A9-40-72
DATE 11/14/80 | CKD. BY

BILL OF MATERIAL

ITEM	QUAN	DESCRIPTION	MAT'L	W7
C1	4	SK. R's C/F 1 R's 3/16 THK.	A285-C	574
C2	2	SK. R's C/F 2 R's 3/16 × 72" × 261"	"	1997
C3	2	SK. R's C/F 2 R's 3/16 × 72" × 261"	"	1997
C4	2	SK. R's C/W ITEM "C3"		
C5	2	SK. R's C/F 2 R's 3/16 × 72" × 261"	"	1997
C6	2	SK. R's C/W ITEM "C5"		
C7	2	SK. R's C/F 2 R's 3/16 × 72" × 261"	"	1997
C8	2	RECT. R's 3/16 × 72" × 261"	"	1997
		ORDER		
	10	R's 3/16 × 72" × 261"		

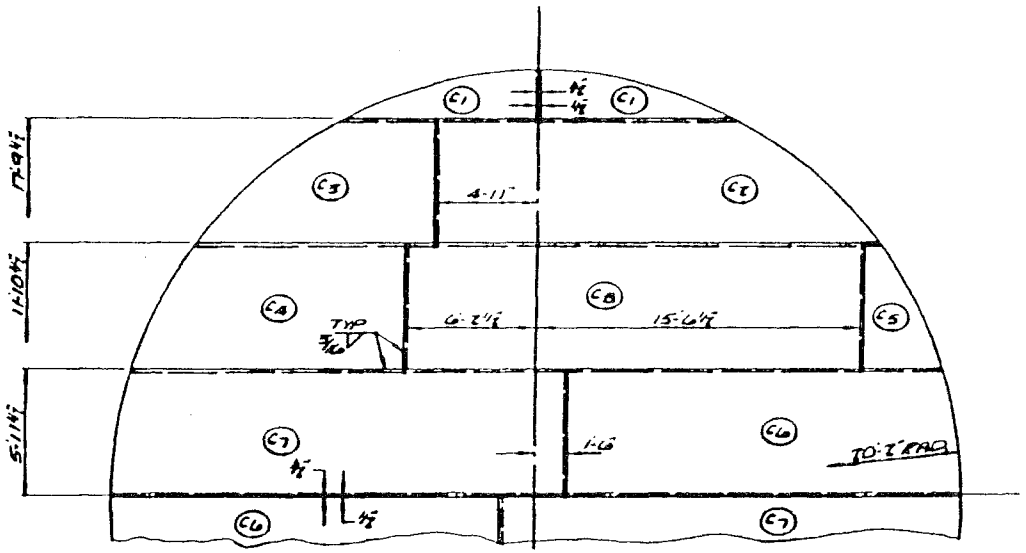

GENERAL NOTES:

1. CUT ALL SKETCH R's TO A 20'-2" RAD
2. ALL LAPS TO BE 1" MIN.
3. LINEAL FT. OF LAPWELD = 274'

PARTIAL PLAN VIEW OF ROOF

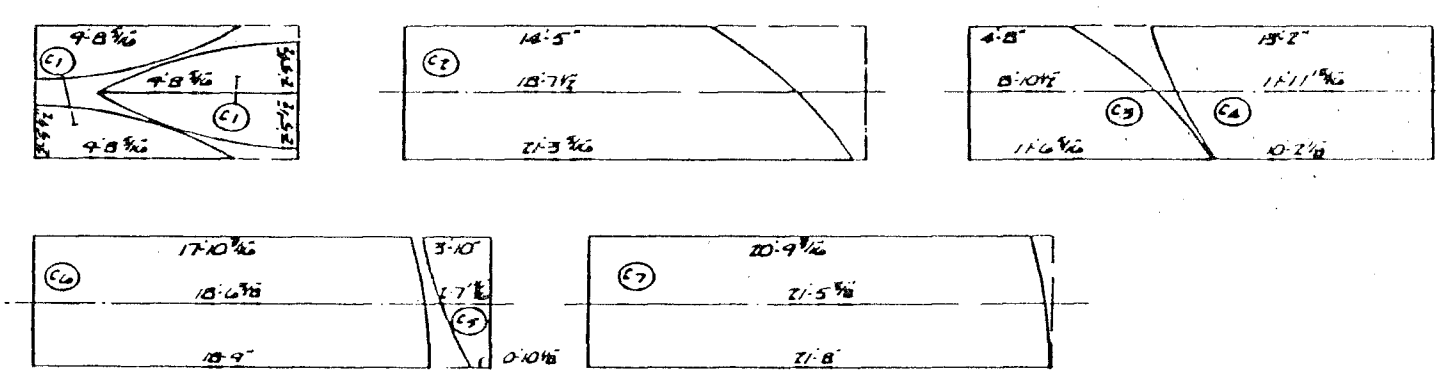

REV.	DATE	DESCRIPTION

PRAIRIE
TANK & CONSTRUCTION CO.

TANK #1

PLAINFIELD, IL
PELL CITY, AL

ROOF FOR A 40'-0" ϕ TANK

SCALE 1/4" = 12"
DATE 11/14/80
DRAWN BY TK
CKD BY
DRAWING NUMBER AC-40-72

GENERAL NOTES:

1. ROLL ALL SHELL PLS TO A 20'-0" RAD.
2. ALL HORIZ. AND VERT. SHELL PL SEAMS TO BE FULL PENETRATION AND FULL FUSION WELDS.

BILL OF MATERIAL

ITEM	QUAN.	DESCRIPTION	MAT'L	WT.
B1	12	PLS 1/4"x6'-7"x31'-5 3/16" LG.	A283-C	25,528
		6-12 PLS 1/4"x80"x378 1/4" LG.		
B2	130	LINEAL FT. OF 3"x3"x1/4"	A36	687
		ANGLE. ROLL ON HEEL TOE-IN TO A 20'-0" RAD.		

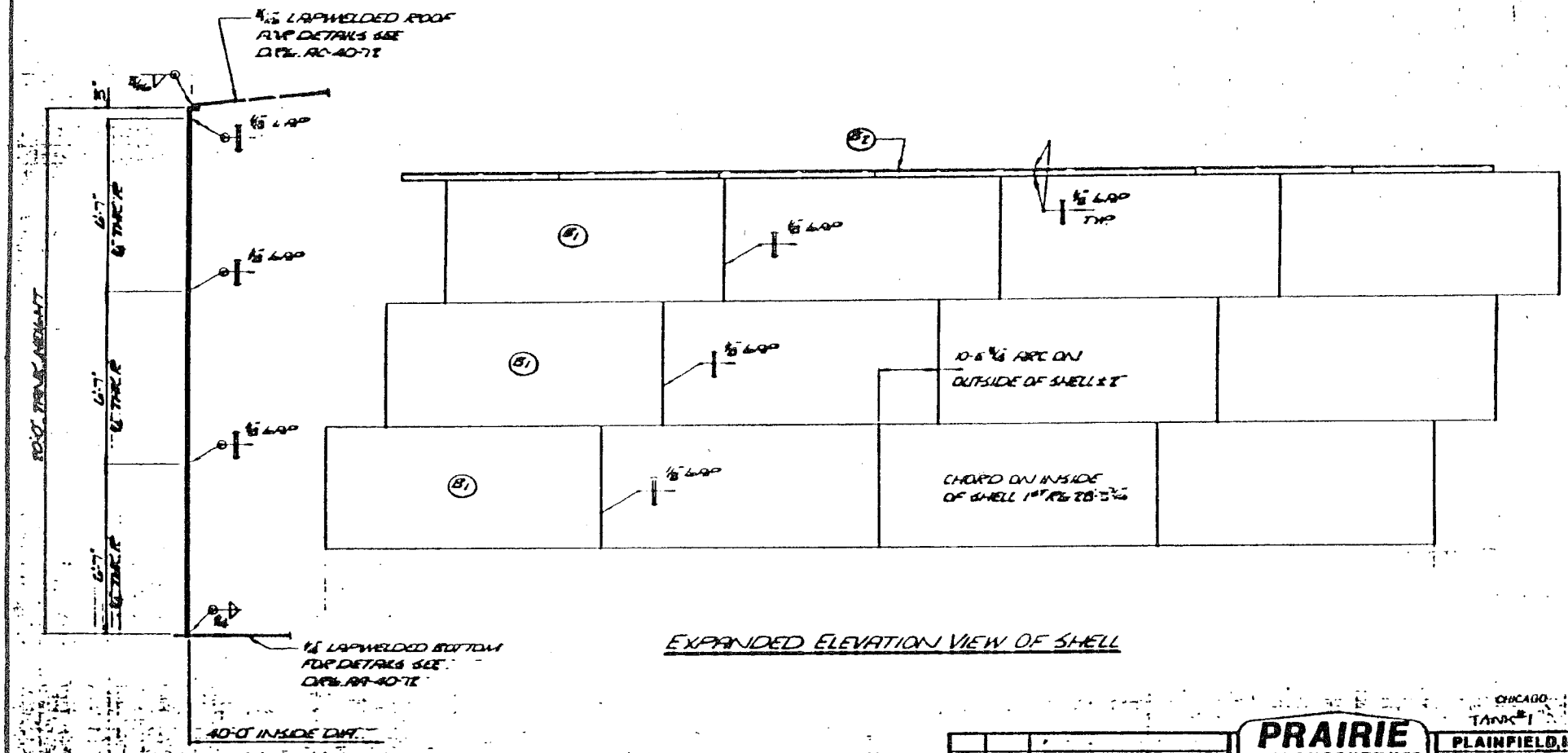

EXPANDED ELEVATION VIEW OF SHELL

CROSS SECTION THRU SHELL

REV.	DATE	DESCRIPTION

CHICAGO
TANK #1

PRAIRIE
TANK & CONSTRUCTION CO.

PLAINFIELD, IL
PELL CITY, AL

SHELL FOR A 40'-0" ϕ x 20'-0"
HIGH CONE ROOF TANK

SCALE NONE | DRAWN BY TK | DRAWING NUMBER S-3969
DATE 10/10/80 | CKD. BY

BILL OF MATERIAL

ITEM	QUAN.	DESCRIPTION	MAT'L	WT.
A1	4	SK. PL'G C/F 2 PL'G 1/4"×72"×238"	A283-C	2376
A2	4	SK. PL'G C/W ITEM "A1"		
A3	2	SK. PL'G C/F 1 PL 1/4"×72"×300"	"	1530
A4	2	SK. PL'G 1 C/F 1 PL 1/4"×72"×300" &	"	1530
		1 C/F PL 1/4"×72"×235" AS	"	1188
		SHOWN		
A5	2	SK. PL'G C/W ITEMS A3 & A4		
A6	1	RECT. PL 1/4"×72"×235"	"	1188

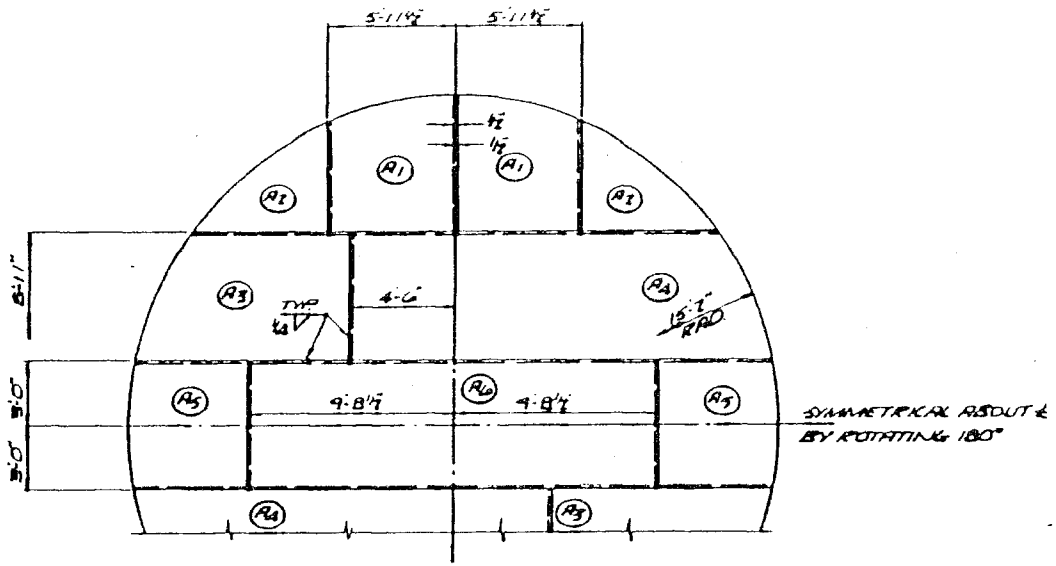

PARTIAL PLAN VIEW OF BOTTOM

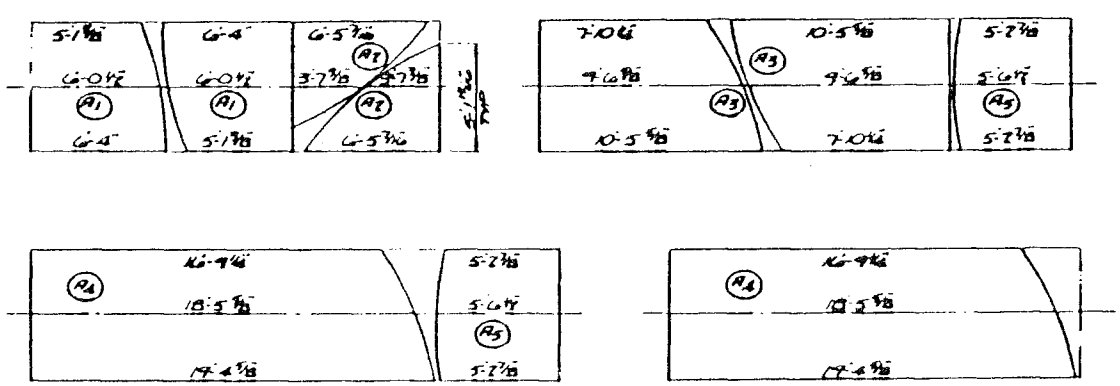

GENERAL NOTES:

1. CUT ALL BOTTOM SKETCH PL'G TO A 15'-2" RAD.
2. ALL LAPS TO BE 1" MIN.
3. LINEAL FT. OF LAPWELD = 167'

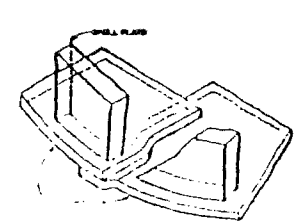

CHICAGO
TANK # 2 & 3

PRAIRIE
TANK & CONSTRUCTION CO.

PLAINFIELD, IL
PELL CITY, AL

30'-0" ⌀ LAPWELDED BOTTOM

REV.	DATE	DESCRIPTION

SCALE 1/4" = 12" | DRAWN BY TK | DRAWING NUMBER
DATE 10/31/80 | CK'D BY | AA-30-72

BILL OF MATERIAL

ITEM	QUAN	DESCRIPTION	MATL	WT
D1	20	[illegible]	[illegible]	107
D2	20	[illegible]	[illegible]	8413
D3	1	PLATE CIRCLE [illegible]	[illegible]	150
D4	1	PE 59 TUBING [illegible]	[illegible]	246
D5	1	PLATE CIRCLE [illegible]	[illegible]	144
D6	3	ANGLES [illegible]	[illegible]	4
D7	48	BOLTS [illegible]	[illegible]	18
D8	45	BOLTS [illegible]	[illegible]	10
D9	1	PE 59 TUBING [illegible]	[illegible]	18

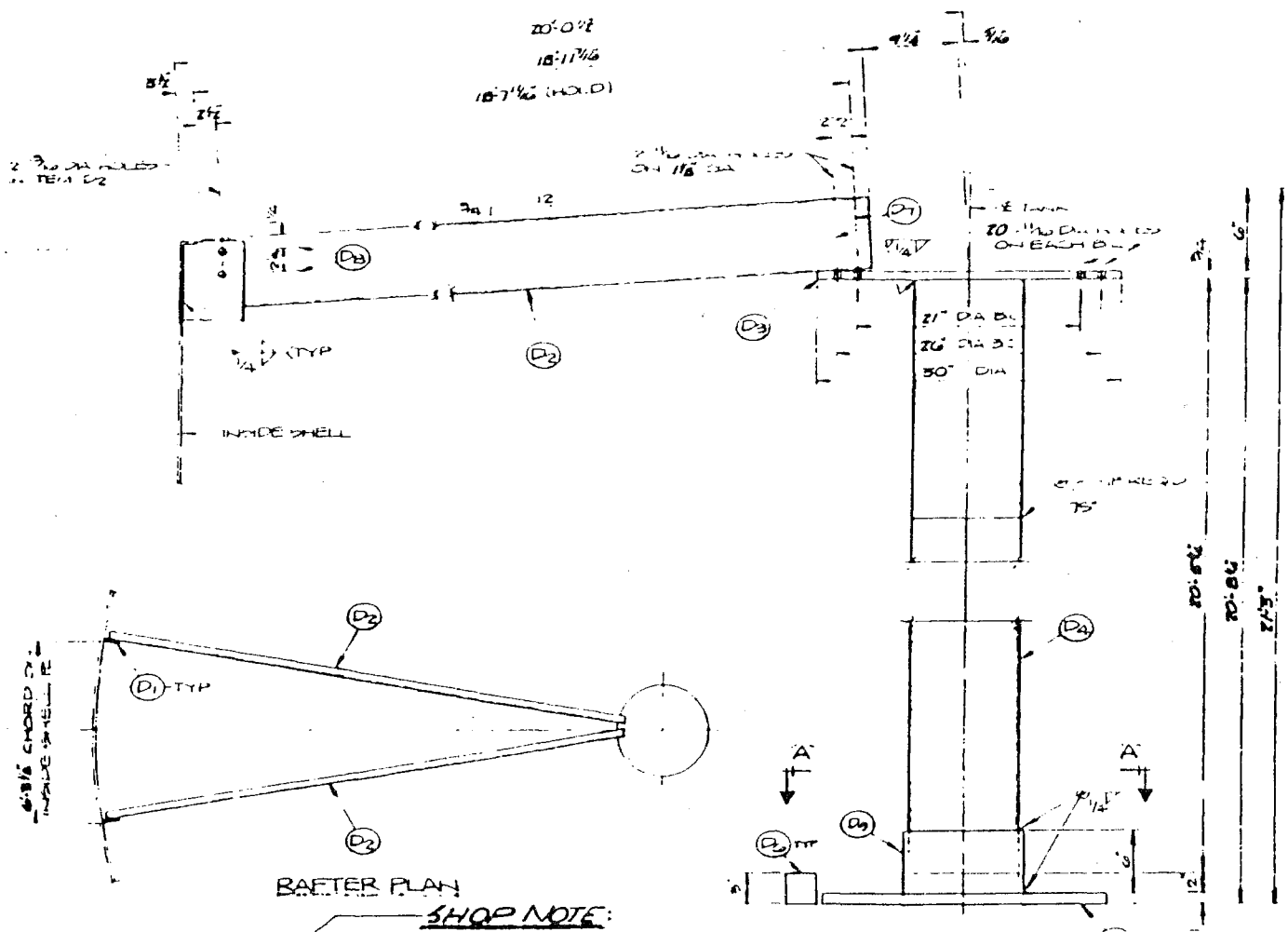

ELEVATION VIEW

RAFTER PLAN

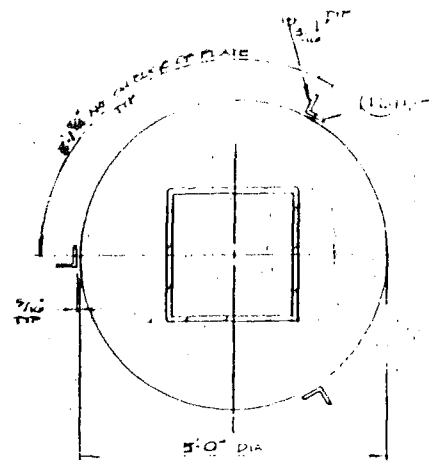

SECTION A-A

SHOP NOTE:
NOTCH CLIP AS SHOWN

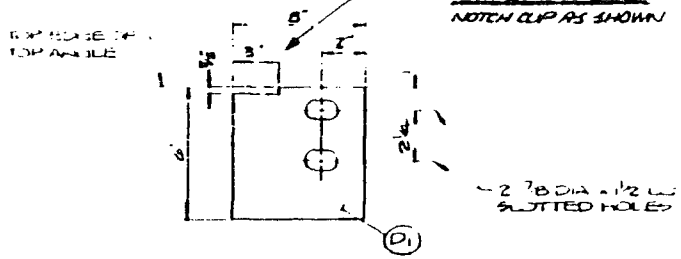

DETAIL OF RAFTER CLIP
ITEM "D1"

CHICAGO
TANK #1

PRAIRIE TANK & CONST. CO.

ROOF SUPPORTS FOR A 40'-0" DIA. x 20'-0" HIGH CONE ROOF TANK.

REV	DATE	DESCRIPTION	SCALE NONE	DRAWN BY TK	DRAWING NUMBER
			DATE 10/11/80	CHK'D BY	9-3970

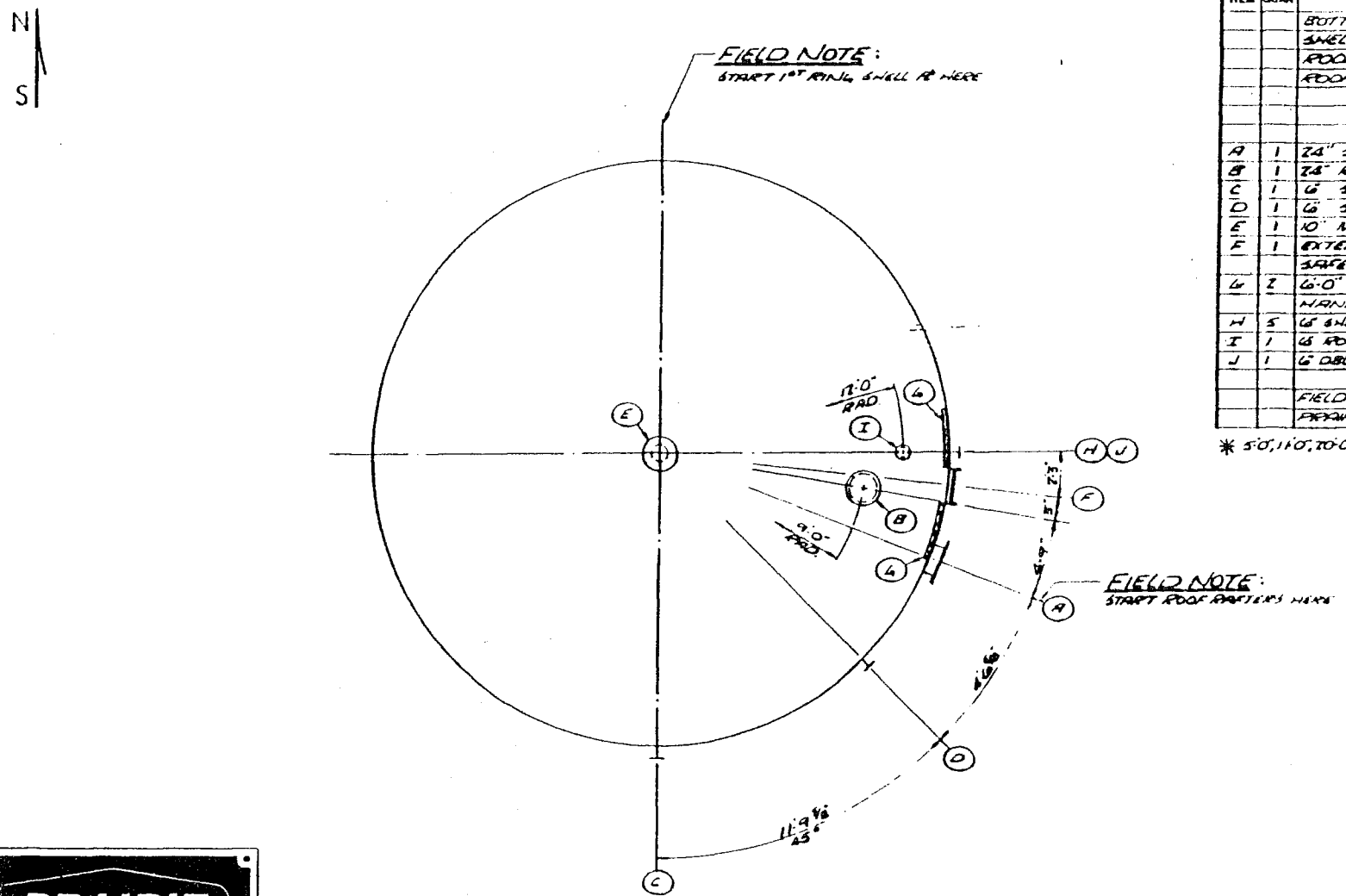

SLUDGE CONCENTRATOR
TANK 3"

LIST OF DRAWINGS & FITTINGS

ITEM	QUAN	DESCRIPTION	ELEV.	DRG.
		BOTTOM 1/4" LAPWELDED	—	AA 30-72
		SHELL - BUTTWELDED	—	S-3967
		ROOF 3/16" LAPWELDED	—	AC 30-72
		ROOF STRUCTURAL	—	S-3968
A	1	24" SHELL MANWAY	2'-6"	P7304
B	1	24" ROOF MANWAY	—	RM-24
C	1	6" SHELL NOZZLE	2'-0"	P7302
D	1	6" SHELL NOZZLE	37'-0"	P7302
E	1	10" MUSHROOM VENT	—	P5217
F	1	EXTERIOR LADDER WITH SAFETY CLIMB	—	P7305
G	2	6'-0" SECTION OF ROOF HANDRAIL	—	P2093
H	5	6" SHELL NOZZLE	*	P7302
I	1	6" ROOF NOZZLE	—	P7343
J	1	6" DBL. FLG. SHELL NOZZLE	1'-0"	P7344
		FIELD NOTES	—	FN 8080
		PRAIRIE TK. NAMEPLATE		

* 5'-0", 11'-0", 20'-0", 29'-0", & 38'-0"

PRAIRIE
TANK & CONSTRUCTION Co.
PLAINFIELD, IL — PELL CITY, AL
YEAR BUILT 1981 — CONTRACT NO. 8080
CAPACITY 21,500 GALS.
DIA 30'-0" HEIGHT 40'-0"
CODE AWWA D-100

LOCATE NAME PLATE & BRACKET ON SHELL MANWAY REINF. ℄ ON VERT. ℄ ABOVE SHELL OPENING.

1. All elevations are taken from top side of bottom plate at shell to horizontal center line of connection.
2. All arc dimensions are measured on outside of shell. Fitting
3. All roof connections are located to center line of connection on slope unless shown otherwise.
4. Due to normal shop and field tolerances, dimensions to tank connections are approximate. Purchaser to make provisions for field fit in connecting piping.

GENERAL NOTES

BOTTOM & ROOF	A283-C
SHELL	"
REINFORCING PLATE	"
NOZZLE FLANGES	A105
NOZZLE NECKS	A36
BOLTS & NUTS	A325
GASKETS	NEOPRENE ASBESTOS

MATERIAL SPEC. (UNLESS NOTED OTHERWISE ON DETAIL DRAWING)

REV	DATE	DESCRIPTION
2	12/17/80	CHGD GASKET MAT'L
1	12/11/80	ADD DRAIN & NOZZLE

CHICAGO

PRAIRIE
TANK & CONSTRUCTION CO.
PLAINFIELD, IL
PELL CITY, AL

ERECTION DRG. FOR A 30'-0" ⌀ x 40'-0" HIGH CONE ROOF TANK
FOR: CHEM-CLEAR INC.
AT: SOUTH CHICAGO, IL.

SCALE 3/16" = 12" — DRAWN BY TK — DRAWING NUMBER E-8080-C1
DATE 10/11/80 — CHKD BY

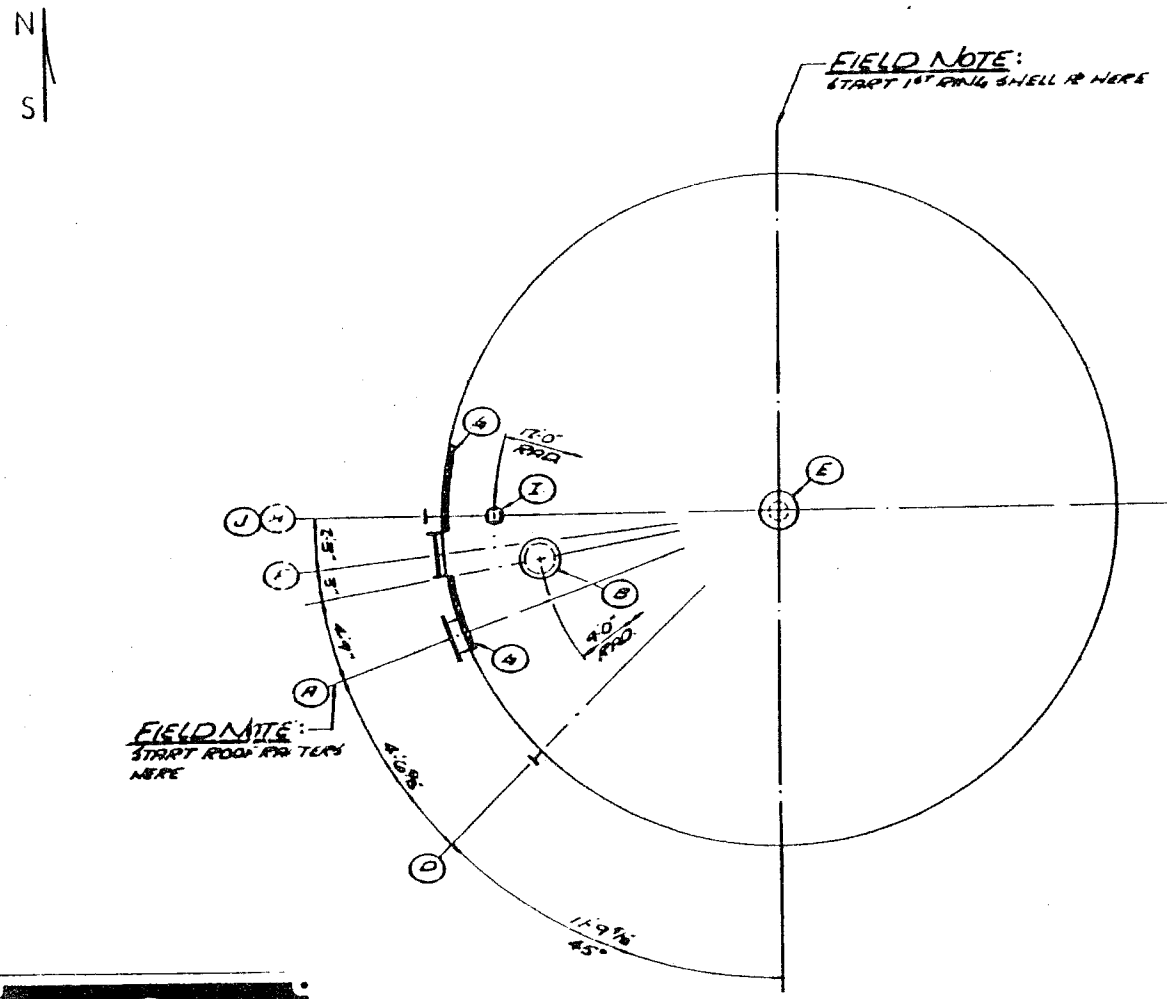

PRIMARY SETTLING TANK 2#

LIST OF DRAWINGS & FITTINGS

ITEM	QUAN	DESCRIPTION	ELEV	DRG#
		BOTTOM 1/4" LAPWELDED	—	AA3072
		SHELL- BUTTWELDED	—	S 5967
		ROOF 3/16" LAPWELDED	—	AC3072
		ROOF STRUCTURAL	—	S 5968
A	1	24" SHELL MANWAY	2'-6"	P7504
B	1	24" ROOF MANWAY	—	RM24
C		NO ITEM		
D	1	6" SHELL NOZZLE	2'-0"	P7502
E	1	10" MUSHROOM VENT	—	P5217
F	1	EXTERIOR LADDER WITH SAFETY CLIMB	—	P7505
G	2	6'-0" SECTION OF ROOF HANDRAIL	—	P20-13
H	6	6" SHELL NOZZLES	*	P7502
I	1	6" ROOF NOZZLE	—	P7545
J	1	6" DBL FLG. SHELL NOZZLE	1'-0"	P7544
		FIELD NOTES	—	[illegible]
		PRAIRIE TK NAMEPLATE		

* 5'-0", 10'-0", 15'-0", 20'-0", 25'-0" & 38'-0"

PRAIRIE
TANK & CONSTRUCTION Co.
PLAINFIELD, IL — PELL CITY, AL
YEAR BUILT 1981 — CONTRACT NO 8080
CAPACITY 21,500 GAL'S.
DIA 30'-0" — HEIGHT 40'-0"
CODE AWWA D-100

LOCATE NAME PLATE & BRACKET ON SHELL MANWAY REINF ℄ ON VENT ℄ ABOVE SHELL OPENING

[illegible]	A283 C
[illegible]	"
[illegible]	"
[illegible]	A105
[illegible]	A36
[illegible]	A325
[illegible]	NEOPRENE [illegible]

MATERIAL SPEC (UNLESS NOTED OTHERWISE)

REV	DATE	DESCRIPTION
3	12/18/80	DELETED NOZZLE, REV ELEV.
2	12/17/80	CHG'D GASKET MAT'L
1	12/11/80	ADD. OPEN'L & NOZZLES

CHICAGO

PRAIRIE
TANK & CONSTRUCTION CO
PLAINFIELD, IL
PELL CITY, AL

ERECTION DRG. FOR A 30'-0" & 40'-0" HIGH CONE ROOF TANK
FOR: CHEM-CLEAR INC.
AT: SOUTH CHICAGO, IL

SCALE 3/16" = 12" — DRAWN BY TK — DRAWING NUMBER E-8080-C2
DATE 10/11/80 — CKD BY

GENERAL NOTES:

1. ROLL ALL SHELL PL'S TO A 15'-0" RAD
2. ALL HORIZ & VERT. SHELL PL SEAMS TO BE FULL PENETRATION AND COMPLETE FUSION.

BILL OF MATERIAL

ITEM	QUAN.	DESCRIPTION	MAT'L	WT.
B1	3	PL'S 5/16" × 7'-11" × 31'-5 5/16" LG.	A283C	4521
		C/F 3 PL'S 5/16" × 96" × 378 1/4"		
B2	12	PL'S 1/4" × 7'-11 1/2" × 31'-5 1/4" LG.	"	30,625
		C/F 12 PL'S 1/4" × 96 1/2" × 378 1/4"		
B3	5	ANGLES 3" × 3" × 1/4" × 20'-0" LG	A36	441
		ROLL ON HEEL TOE-IN TO A		
		15'-0" RAD. TRIM TO 18'-0"		
		AFTER ROLLING		
B4	1	ANGLE 3" × 3" × 1/4" × 7'-0" LG	"	26
		TRIM TO 5'-0" AFTER		
		ROLLING (EXTRA FOR TRIM)		

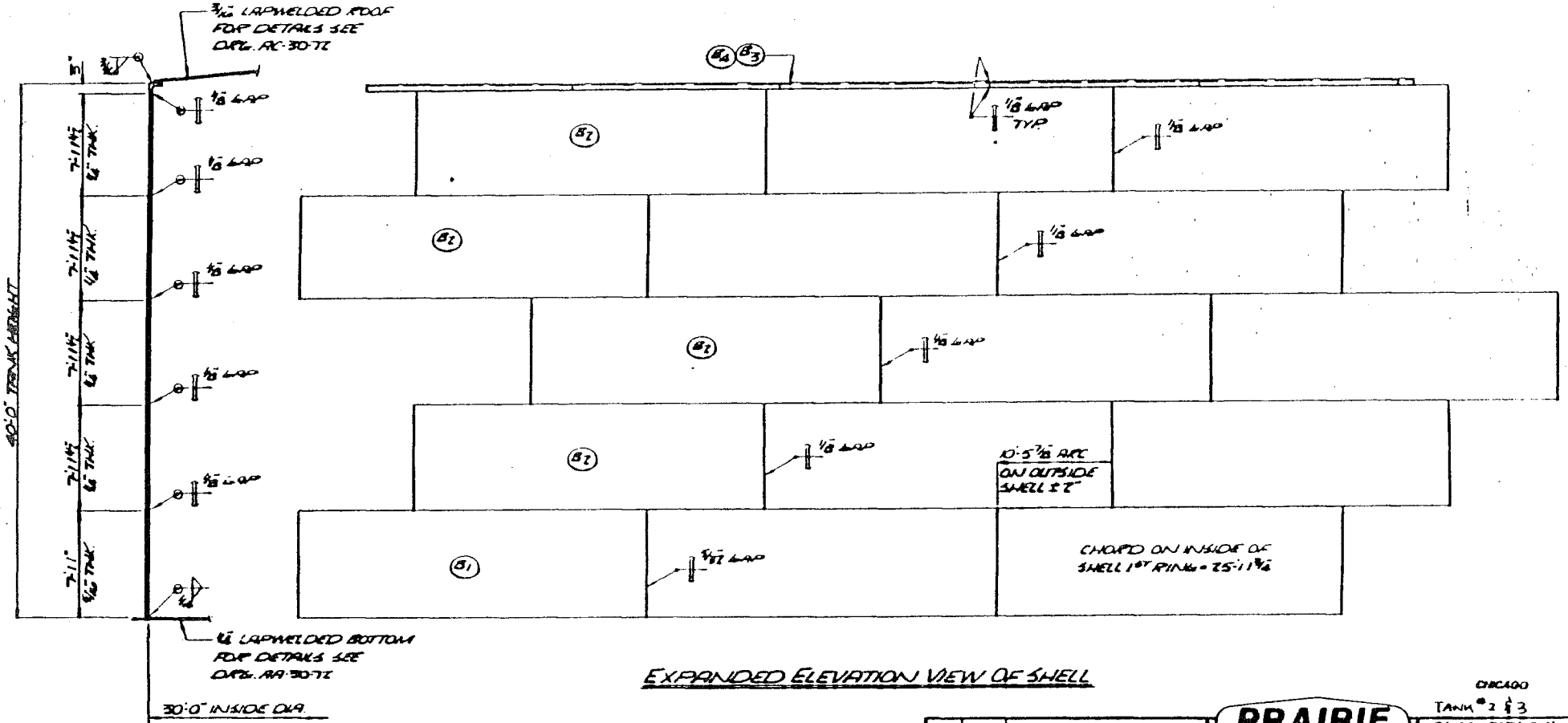

EXPANDED ELEVATION VIEW OF SHELL

CROSS SECTION THRU SHELL

CHICAGO

TANK #2 & 3

PRAIRIE TANK & CONSTRUCTION CO.

PLAINFIELD, IL

PELL CITY, AL

SHELL FOR A 30'-0" ϕ × 40'-0" HIGH

CONE ROOF TANK

REV	DATE	DESCRIPTION

SCALE NONE | DRAWN BY TK | DRAWING NUMBER S-3967

DATE 10/31/80 | CKD BY

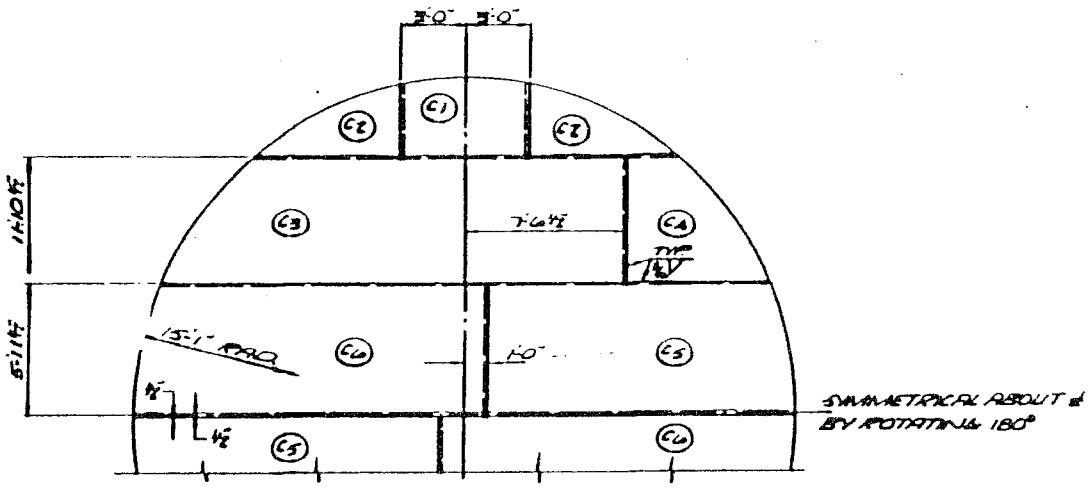

PARTIAL PLAN VIEW OF ROOF

BILL OF MATERIAL

ITEM	QUAN.	DESCRIPTION	MATL	WT.
C1	2	SK. RAD 5'-2 1/2" x 7'-2 1/2" x 7'-2 1/2" x 7'-2 1/2" x 7'-2 1/2"	A285-C	1782
C2	4	SK. RAD 5'-2 1/2" x 7'-2 1/2" x 7'-2 1/2" x 7'-2 1/2" x 9'-0	"	2295
C3	2	SK. RAD 5'-2 1/2" x 7'-2 1/2" ITEM C2		
C4	2	SK. RAD 5'-2 1/2" x 7'-2 1/2" x 7'-2 1/2" x 7'-2 1/2" x 7'-2 1/2"	"	1782
C5	2	SK. RAD 5'-2 1/2" x 7'-2 1/2" ITEM C4		
C6	2	SK. RAD 5'-2 1/2" x 7'-2 1/2" ITEM C1		

GENERAL NOTES:

1. CUT ALL ROOF SKETCH RAD TO A 15'-1" RAD.
2. ALL LAPS TO BE 1" MIN.
3. LINEAL FT. OF ROOF LAPWELD = 154'

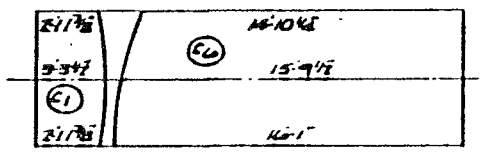

CUTTING DIAGRAM OF "C1 & C6"

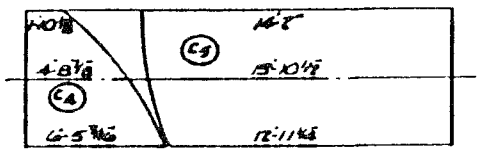

CUTTING DIAGRAM OF "C4 & C5"

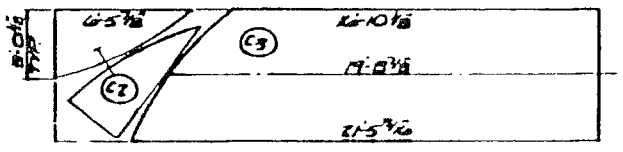

CUTTING DIAGRAM OF "C2 & C3"

REV.	DATE	DESCRIPTION

CHICAGO
TANK # 2 & 3

PRAIRIE TANK & CONSTRUCTION CO.

PLAINFIELD, IL
PELL CITY, AL

30'-0" ℄ LAPWELDED ROOF

3/4" TO 12" SLOPE

SCALE	DRAWN BY	DRAWING NUMBER
1/4" = 1'-0"	TK	AC-30-72
DATE 10/30/80	CHK'D BY	

N
S

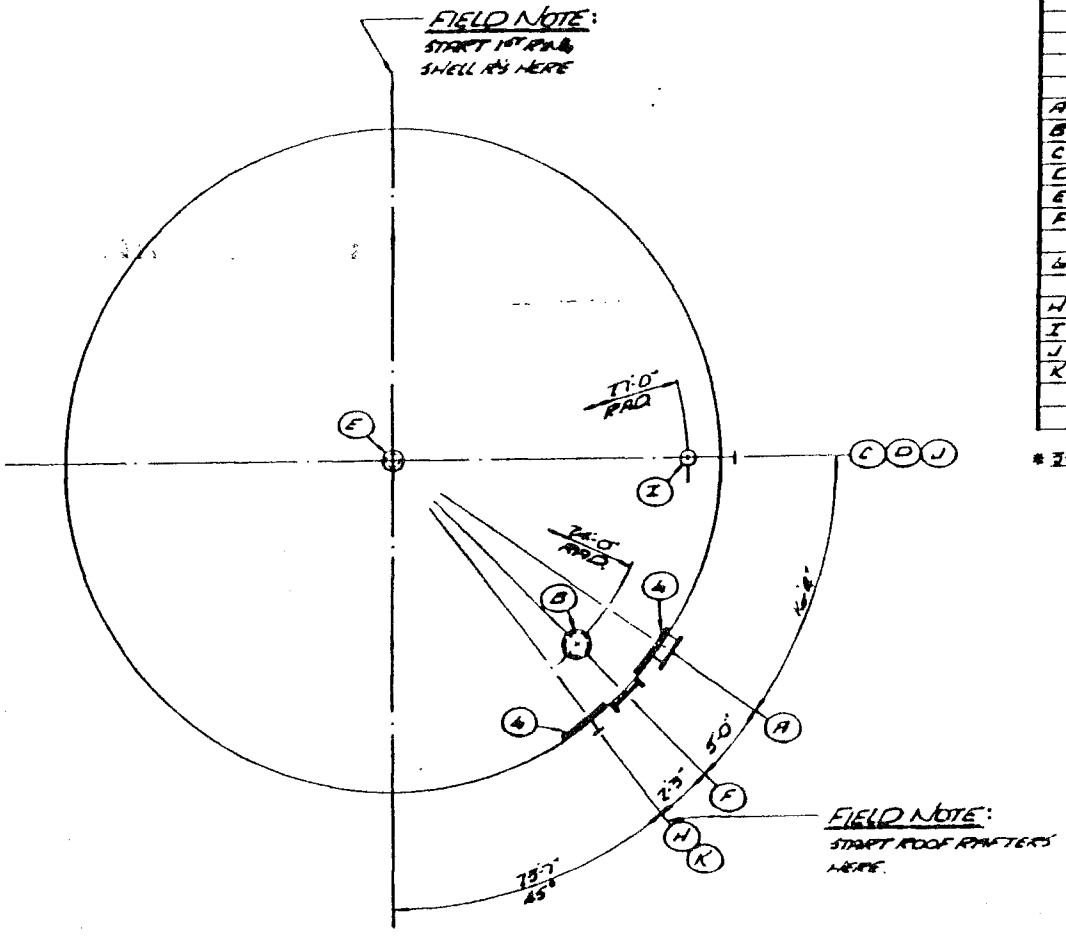

MIX TANK
TANK 4

LIST OF DRAWINGS & FITTINGS

ITEM	QUAN.	DESCRIPTION	ELEV.	DRG.
		BOTTOM 1/4" LAP WELDED	—	A9G070
		SHELL - BUTT WELDED	—	3 39646
		ROOF 3/16" LAP WELDED	—	A-6072
		ROOF STRUCTURAL	—	3 39646
		RAFTER SUPPORT RING	—	3 3876
A	1	24" SHELL MANWAY	2'-6"	A7301
B	1	24" ROOF MANWAY	—	RM-24
C	1	6" SHELL NOZZLE	6'-0"	A7307
D	1	6" SHELL NOZZLE	18'-0"	A7307
E	1	10" MUSHROOM VENT	—	A5717
F	1	INTERIOR LADDER	—	A7309
G	2	6'-0" SECTION OF ROOF HANDRAIL	—	A2093
H	3	6" SHELL NOZZLES	*	A7307
I	1	6" ROOF NOZZLE	—	A7343
J	1	6" SHELL NOZZLES	1'-0"	A7307
K	1	6" DBL FLG. SHELL NOZZLE	1'-0"	A7344
		FIELD NOTES	—	AN 8080
		PROVIDE TK. NAMEPLATE		

* 3'-0", 8'-0", & 13'-0"

LOCATE NAME PLATE & BRACKET ON SHELL MANWAY REINF. ℄ ON VERT. ℄ ABOVE SHELL OPENING.

1. All elevations are taken from top side of bottom plate or shell to horizontal center line of connection.
2. All are dimensions are measured on outside of shell – 1st ring.
3. All road connections are located to center line of connection ⊠ ⊡ unless shown otherwise.
4. Due to normal shop and field tolerance, dimensions to tank connections are approximate. Purchaser to make provisions for field fit in connecting piping.

BOTTOM & ROOF	A7853-C
SHELL	"
REINFORCING PLATE	"
NOZZLE FLANGES	A105
NOZZLE NECKS	A106
BOLTS & NUTS	A325
GASKETS	RESPONSIBLE FABRICATOR

FURNISH NOTES OTHER SIDE

2	11/1/80	CHKD GASKET MAT'L
1	11/1/80	ADDED OPTIONAL NOZZLE

PRAIRIE TANK & CONSTRUCTION CO.
PLAINFIELD, IL
PELL CITY, AL

ERECTION DRG. FOR A 60'-0" ⌀ x 20'-0" HIGH CONE ROOF TANK
FOR: CHEM-CLEAR INC.
AT: SOUTH CHICAGO, IL.

SCALE 1/8" = 1'-0" | DRAWN BY TK | DRAWING NUMBER E-A040-A

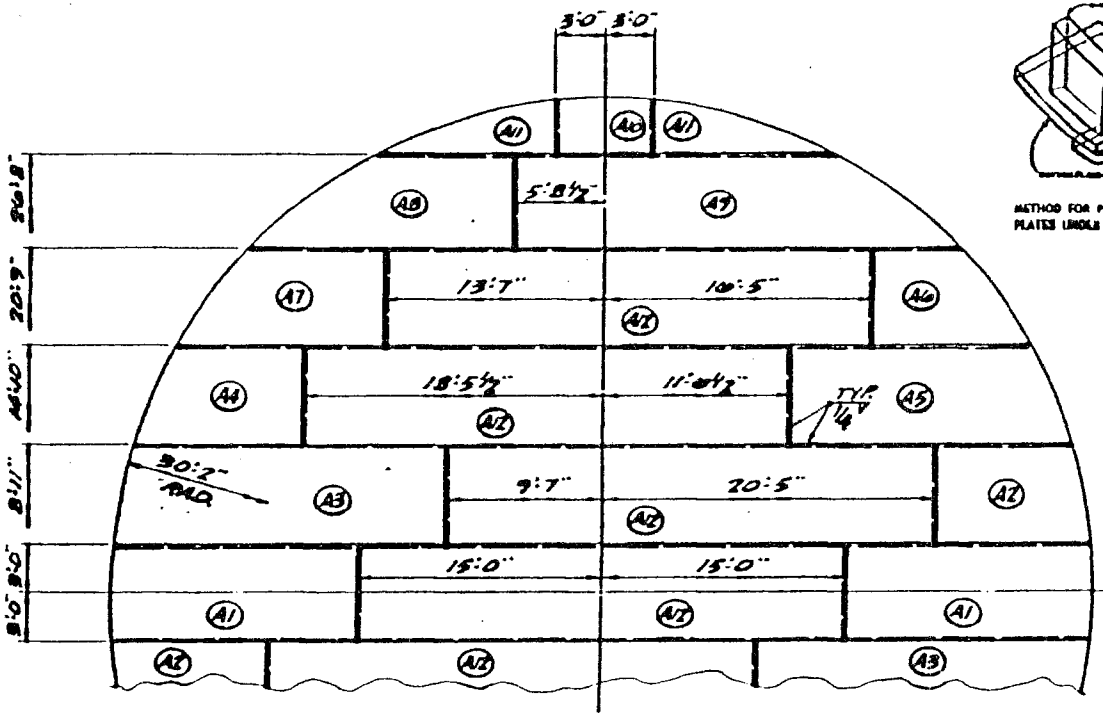

PLAN VIEW OF BOTTOM

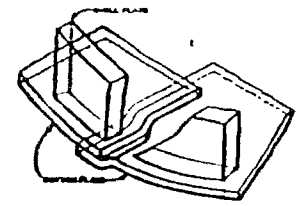

METHOD FOR PREPARING LAP-WELDED BOTTOM PLATES UNDER TANK SHELL.

BILL OF MATERI...				
ITEM	QUAN.	DESCRIPTION	MAT'L	WT.
A1	2	SK. R'S C/F 2 R'S 1/4" x 72" x 300"	A283-C	3060
A2	2	SK. R'S C/W ITEM A1	"	
A3	2	SK. R'S C/F 2 R'S 1/4" x 72" x 360"	"	3672
A4	2	SK. R'S C/W ITEM A3	"	
A5	2	SK. R'S C/F 2 R'S 1/4" x 72" x 300"	"	3060
A6	2	SK. R'S C/W ITEM A5	"	
A7	2	SK. R'S C/F 2 R'S 1/4" x 72" x 300"	"	3060
A8	2	SK. R'S C/W ITEM A7	"	
A9	2	SK. R'S C/F 2 R'S 1/4" x 72" x 360"	"	3672
A10	2	SK. R'S 1/4" TN'K	"	
A11	4	SK. R'S C/F 1 R 1/4" x 72" x 300"	"	3060
A12	7	R'S 1/4" x 72" x 360"	"	12852

ORDER
7-1/4" x 72" x 300"
11-1/4" x 72" x 360

SYMMETRICAL ABOUT ℄ BY ROTATING 180°

GENERAL NOTES:

1. ALL LAPS ARE 1" MIN.
2. CUT ALL SKS TO A 30'-3" RAD.
3. LINEAL FT. OF WELD = 540'

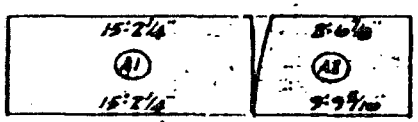

CUTTING DIAGRAM OF A1 & A2

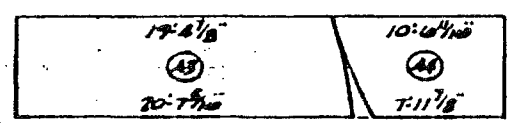

CUTTING DIAGRAM OF A3 & A4

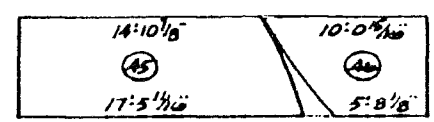

CUTTING DIAGRAM OF A5 & A6

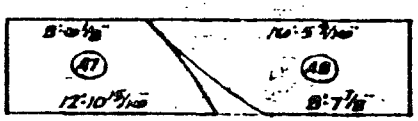

CUTTING DIAGRAM OF A7 & A8

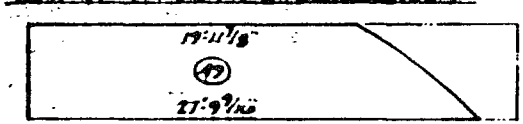

CUTTING DIAGRAM OF A9

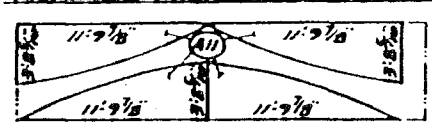

CUTTING DIAGRAM OF A11

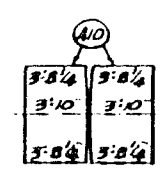

CUTTING DIAGRAM OF A10

TANK #4

REV	DATE	DESCRIPTION

PRAIRIE TANK & CONST. CO.

60'-0" LAPWELDED BOTTOM

SCALE 3/16" = 12" | DRAWN BY MEW | DRAWING NUMBER AA-60-72
DATE 8/7/79 | CK'D BY

BILL OF MATERIAL

ITEM	QUAN	DESCRIPTION	MAT'L	WEIGHT
S1	1	ANGLE 4" x 4" x 3/8" x 20'-0" LG	A36	165
		ROLL ON HEEL - TIE OUT		
		TO A 2'-6" RAD TRIM TO		
		16'-9 1/16" AFTER ROLLING		
S2	12	ANGLE 3" x 3" x 5/16" x 3'-1 7/8"	A36	231
		SEE DETAIL		
S3	1	PLATE 7/8" THK x 18" DIA	ASTM GR 36	65

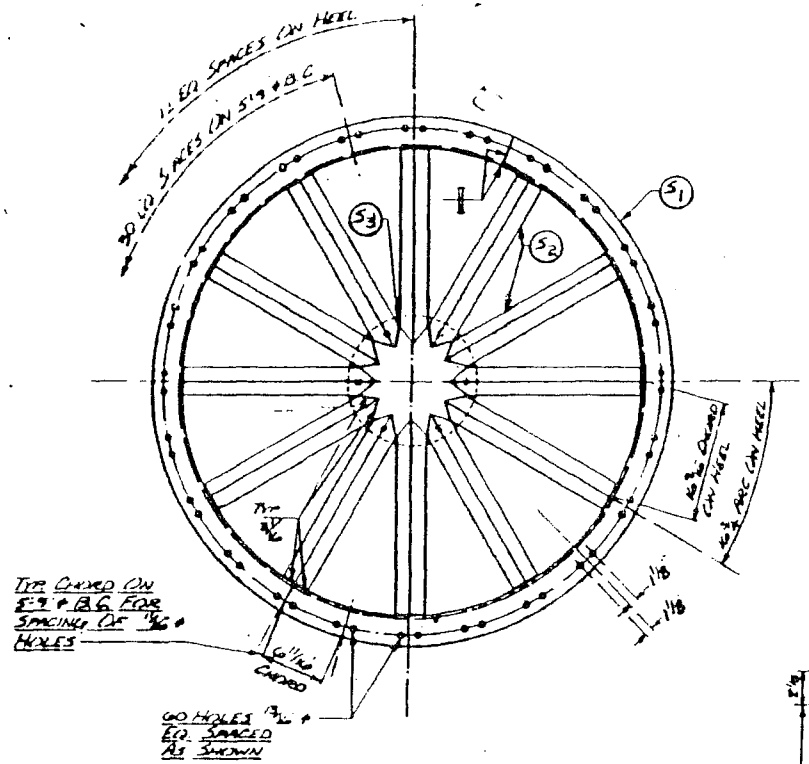

PLAN VIEW OF RAFTER SUPPORT RING

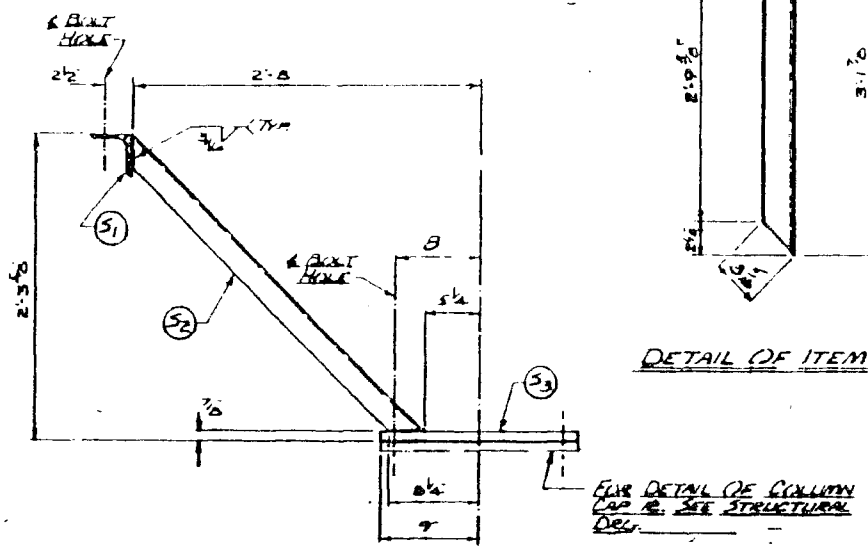

ENLARGED SECTIONAL VIEW

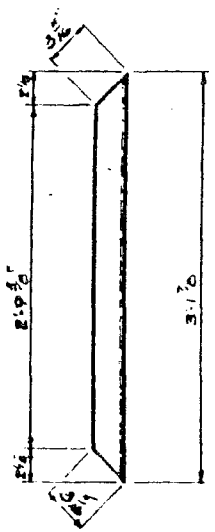

DETAIL OF ITEM "S2"

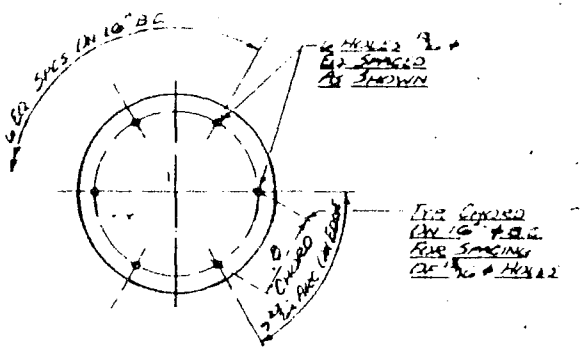

DETAIL OF BASE ⌀ - ITEM S3

CHICAGO TANK #4

PRAIRIE TANK & CONST. CO.

RAFTER SUPPORT RING

SCALE VARIES | DRAWN BY MEW | DRAWING NUMBER

GENERAL NOTES:

1. ROLL ALL SHELL PLS TO A 30'-0" RAD.
2. ALL HORIZ. AND VERT. SHELL PLATE SEAMS TO BE FULL PENETRATION AND FULL FUSION WELDS.

BILL OF MATERIAL

ITEM	QUAN.	DESCRIPTION	MAT'L	WT.
B1	6	PLS 5/16 × 6'-7" × 31'-5 5/32" LG	A285C	15824
		5/16 6 PLS 5/16 × 80" × 5'-10 11/16" LG		
B2	12	PLS 1/4 × 6'-7" × 31'-5 11/16" LG.	"	15324
		5/16 12 PLS 1/4 × 80" × 5'-10 11/16" LG		
B3	10	ANGLES 3"×3"×1/4"×20'-0" LG	A36	881
		ROLL ON HEEL TOE-IN TO		
		A 30'-0" RAD. TRIM TO		
		18'-0" AFTER ROLLING.		
B4	1	ANGLE 3"×3"×1/4"×16'-6" LG.	A36	47
		TRIM TO 4'-6" AFTER		
		ROLLING (EXTRA MAT'L		
		FOR TRIM.)		

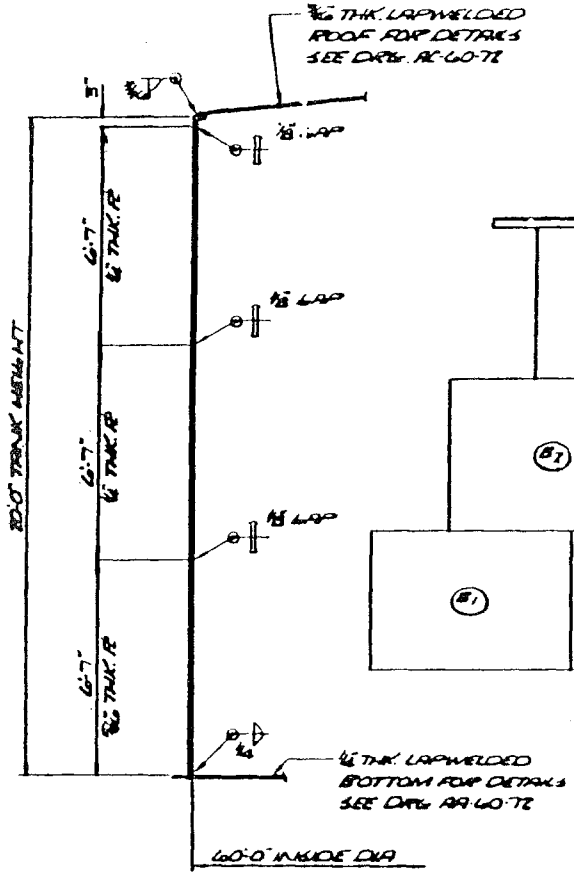

CROSS SECTION THRU SHELL

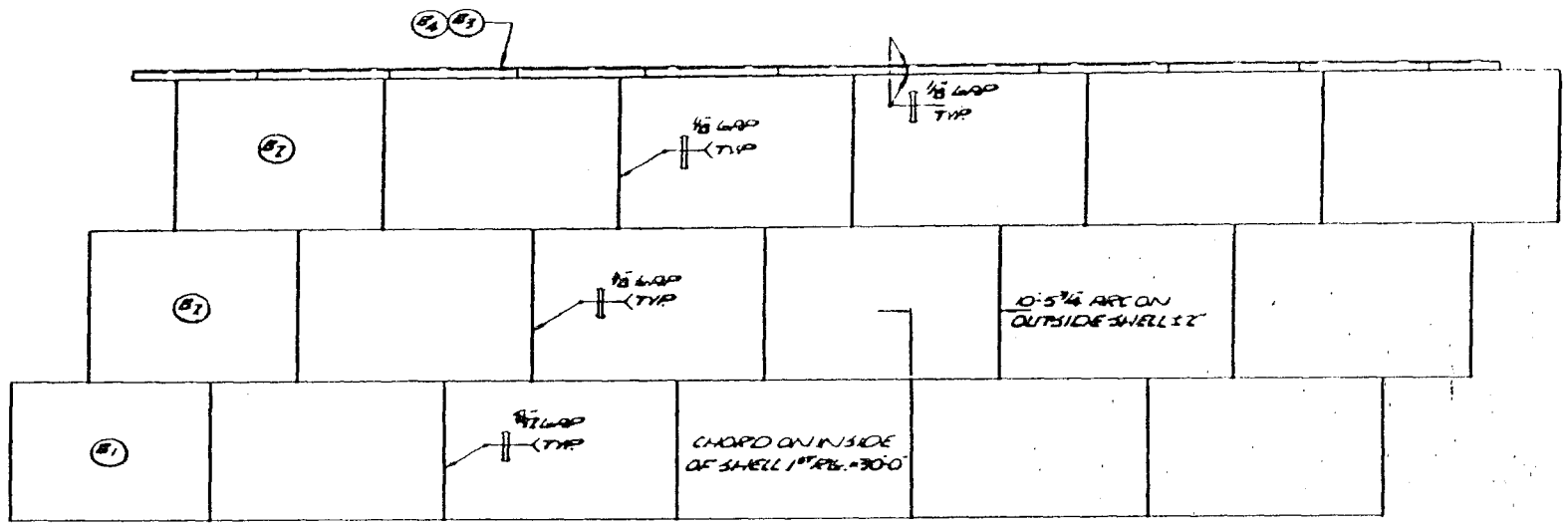

EXPANDED ELEVATION VIEW OF SHELL

CHICAGO

TANK #4

REV	DATE	DESCRIPTION

PRAIRIE TANK & CONSTRUCTION CO. — PLAINFIELD, IL — PELL CITY, AL

SHELL FOR A 60'-0" ⌀ × 20'-0" HIGH CONE ROOF TANK

SCALE NONE	DRAWN BY TK	DRAWING NUMBER S-39605
DATE 10/29/80	CKD BY	

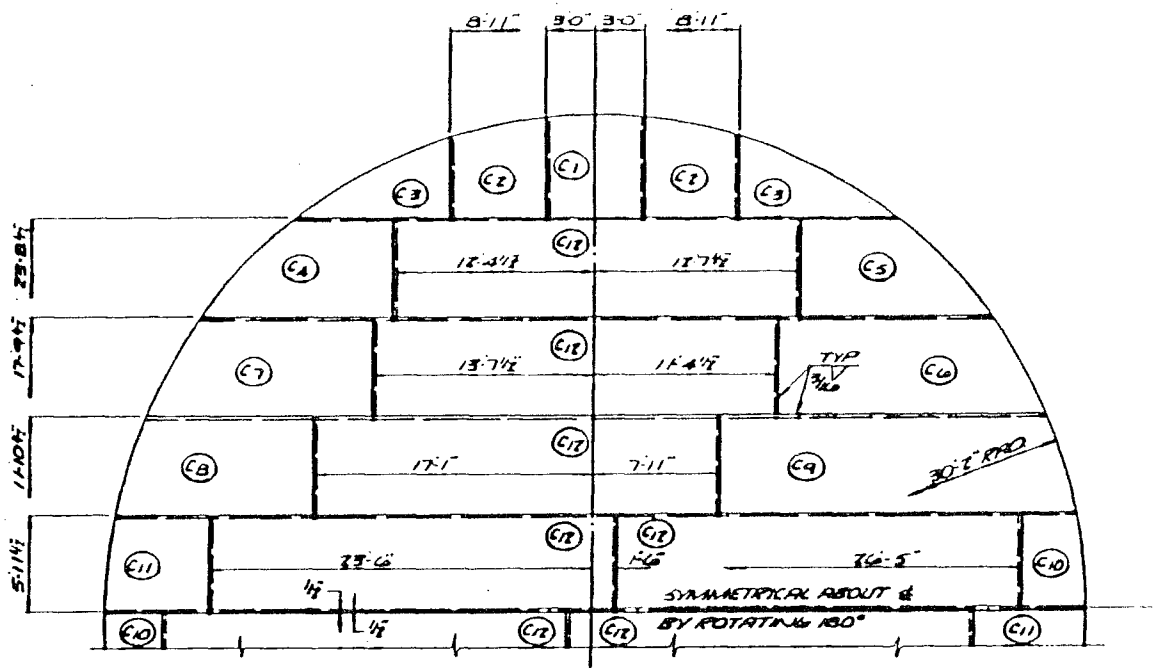

PARTIAL PLAN VIEW OF ROOF

BILL OF MATERIAL

ITEM	QUAN.	DESCRIPTION	MAT'L	WT.
C1	2	SK. R'S C/F 2 R'S 3/16" × 72" × 233"	A283C	1782
C2	4	SK. R'S C/W ITEM C1		
C3	4	SK. R'S C/F 2 R'S 3/16" × 72" × 233"	"	1782
C4	2	SK. R'S C/F 1 R'S 3/16" × 72" × 233"	"	891
C5	2	SK. R'S C/F 2 R'S 3/16" × 72" × 300"	"	2295
C6	2	SK. R'S C/W ITEM C5		
C7	2	SK. R'S C/F 2 R'S 3/16" × 72" × 300"	"	2295
C8	2	SK. R'S C/W ITEM C7		
C9	2	SK. R'S C/F 2 R'S 3/16" × 72" × 300"	"	2295
C10	2	SK. R'S C/W ITEM C9		
C11	2	SK. R'S C/W ITEM C3		
C12	10	RECT. R'S 3/16" × 72" × 300"	"	11498

ORDER
5 - 1/4" × 72" × 233"
10 - 1/4" × 72" × 300"

GENERAL NOTES:

1. CUT ALL SKETCH PLATES TO A 30'-2" RAD.
2. ALL LAPS TO BE 1" MIN
3. LINEAL FT. OF LAPWELD = 616'

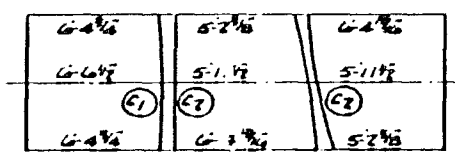

CUTTING DIAGRAM OF "C1 & C2"

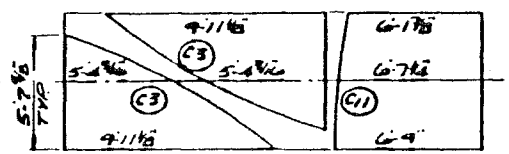

CUTTING DIAGRAM OF "C3 & C11"

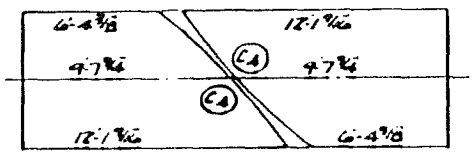

CUTTING DIAGRAM OF "C4"

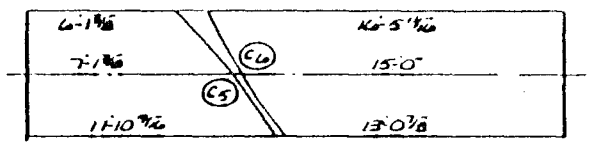

CUTTING DIAGRAM OF "C5 & C6"

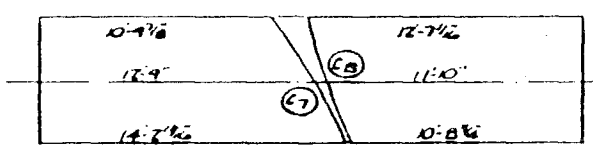

CUTTING DIAGRAM OF "C7 & C8"

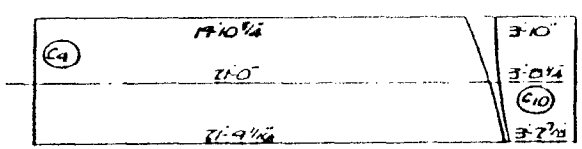

CUTTING DIAGRAM OF "C9 & C10"

REV	DATE	DESCRIPTION

PRAIRIE
TANK & CONSTRUCTION CO.

TANK #4
PLAINFIELD, IL
PELL CITY, AL

60'-0" ⌀ ROOF (LAPWELDED)

3/4" TO 12" SLOPE

SCALE VARIES | DRAWN BY TK | DRAWING NUMBER AC-60-72
DATE 10/30/80 | CK'D BY

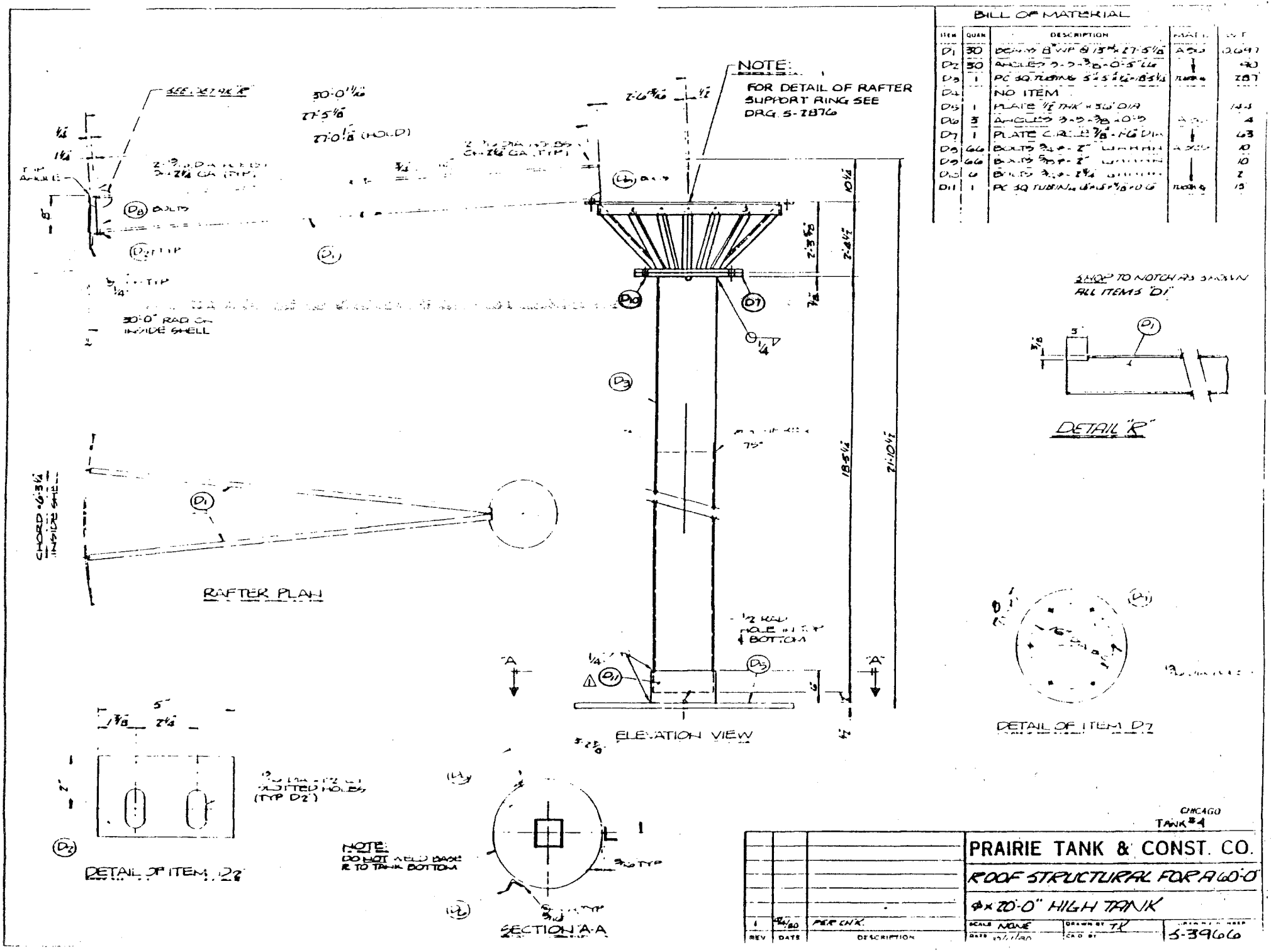

BILL OF MATERIAL

ITEM	QUAN	DESCRIPTION	MATL	WT
D1	30	BEAMS 8" WP @ 13# x 27'-5 1/8"	A 36	0.697
D2	30	ANGLES 3-5-3/8-0'-5" LG	↓	40
D3	1	PC SQ. TUBING 5"x5"x1/4"x18'-5 1/4"	TUBING	287
D4		NO ITEM		
D5	1	PLATE 1/2" THK x 36" DIA		144
D6	3	ANGLES 3-5-3/8-0'-5"	A 36	4
D7	1	PLATE CIRCLE 7/8"-1'-6" DIA	↓	63
D8	66	BOLTS 3/4"-2"	A 36	10
D9	66	BOLTS 5/8"-2"	↓	10
D10	6	BOLTS 3/4"-2 3/4"	↓	2
D11	1	PC SQ TUBING 6"x6"x3/8"x0'-6"	TUBING	15

BILL OF MATERIAL

ITEM	QUAN	DESCRIPTION	MATL	[illegible]
D1	15	[illegible]	[illegible]	76
D2	15	[illegible] 5" @ 6.7# x 15-11 5/16	[illegible]	401
D3	1	PLATE CIRCLE 3/4" THK x 30" DIA	[illegible]	150
D4	1	PL SQ TUBING 7"x7" x 1/4" x 40'-2"	[illegible]	885
D5	1	PLATE CIRCLE 1/2" THK x 36" DIA.	[illegible]	144
D6	3	ANGLES 3"x3"x1/4" x 3'-3" [illegible]	[illegible]	4
D7	55	[illegible]	[illegible]	6
D8	85	[illegible]	[illegible]	6
D9	1	[illegible]	[illegible]	19

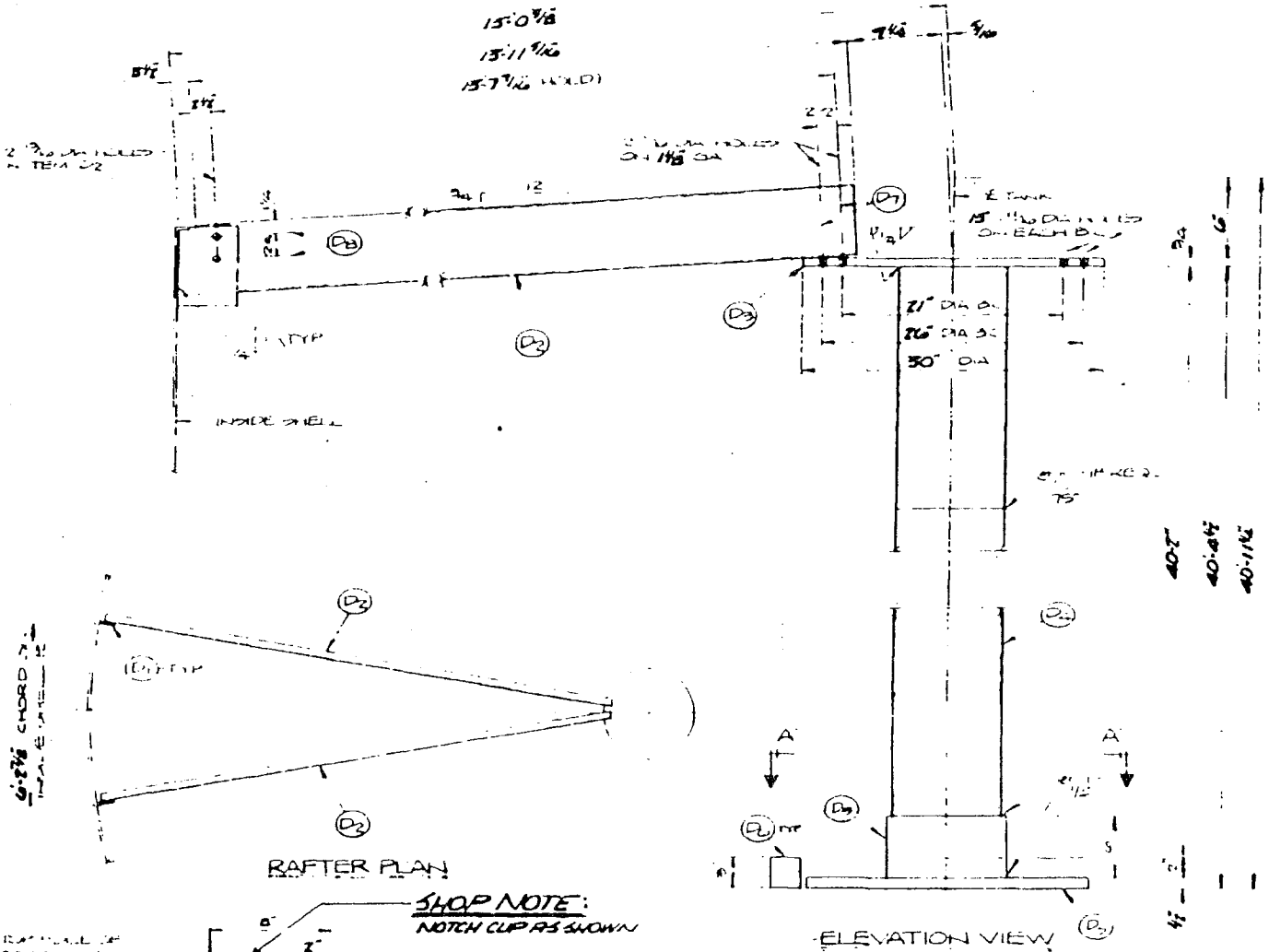

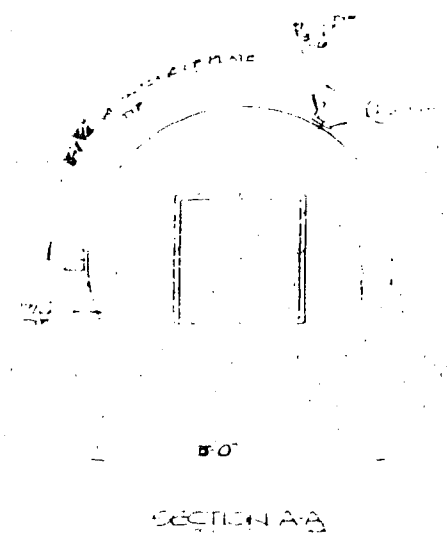

CHICAGO
TANK # 2 & 3

PRAIRIE TANK & CONST. CO.

ROOF SUPPORTS FOR A 30'-0" DIA. x 40'-0" HIGH CONE ROOF TANK.

REV	DATE	DESCRIPTION

SCALE [illegible] | DRAWN BY TK | DRAWING NUMBER [illegible]
DATE [illegible] | CHK BY

PRAIRIE TANK & CONST. CO.

CHICAGO

SK RM-24

24" DIA ROOF MANWAY

BY WRW

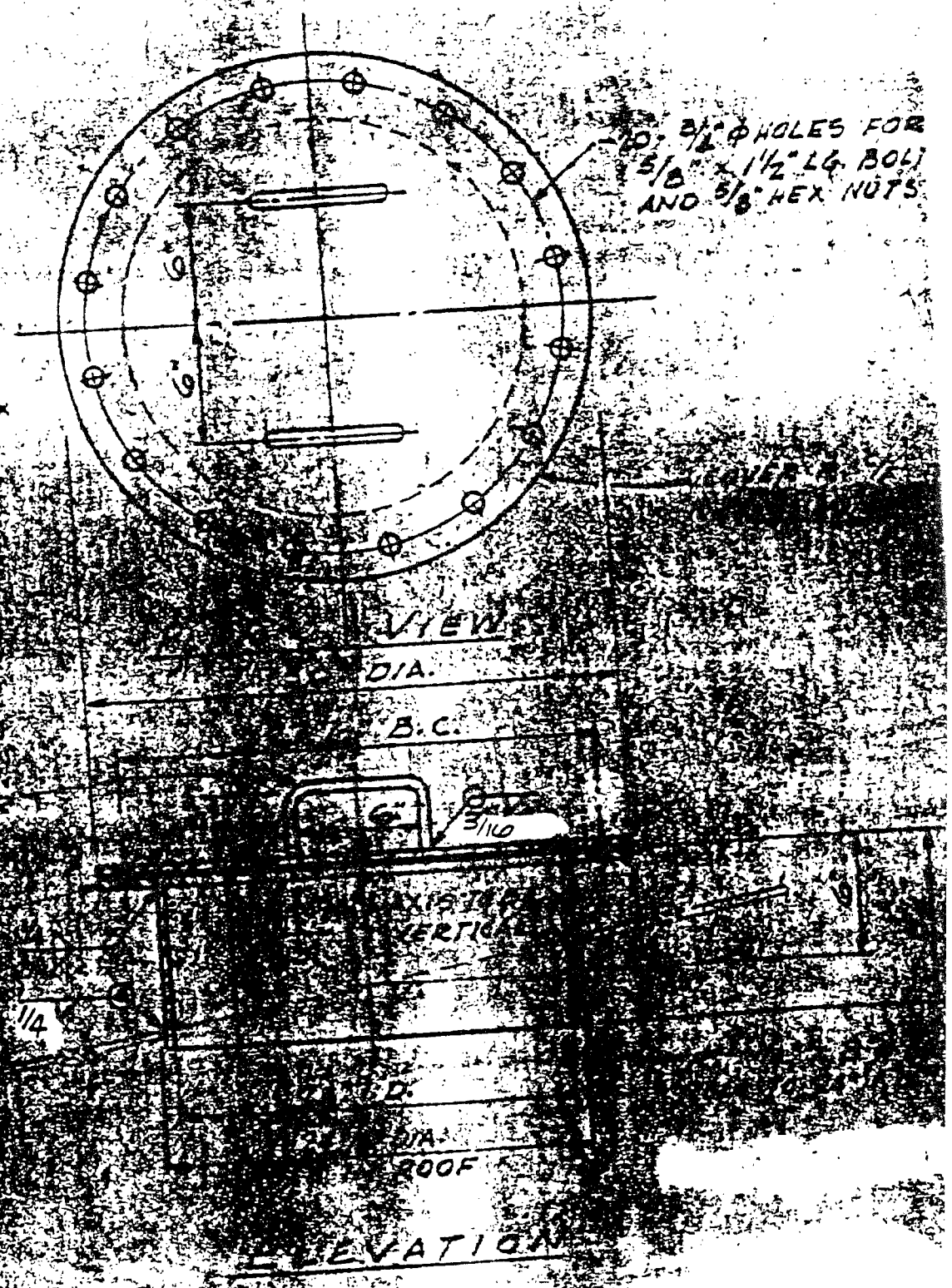

PRAIRIE TANK & CONST. CO. CHICAGO

24" DIA. ROOF MANWAY | SK RM-24

BY WRW

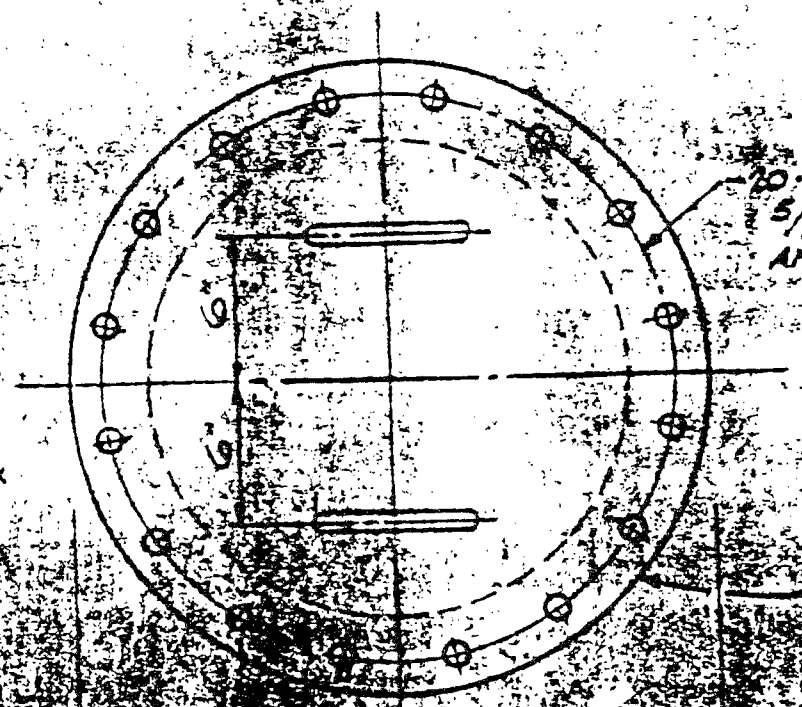

PRAIRIE TANK & CONST. CO.

24" DIA. ROOF MANWAY | SK RM-24

BY WRW

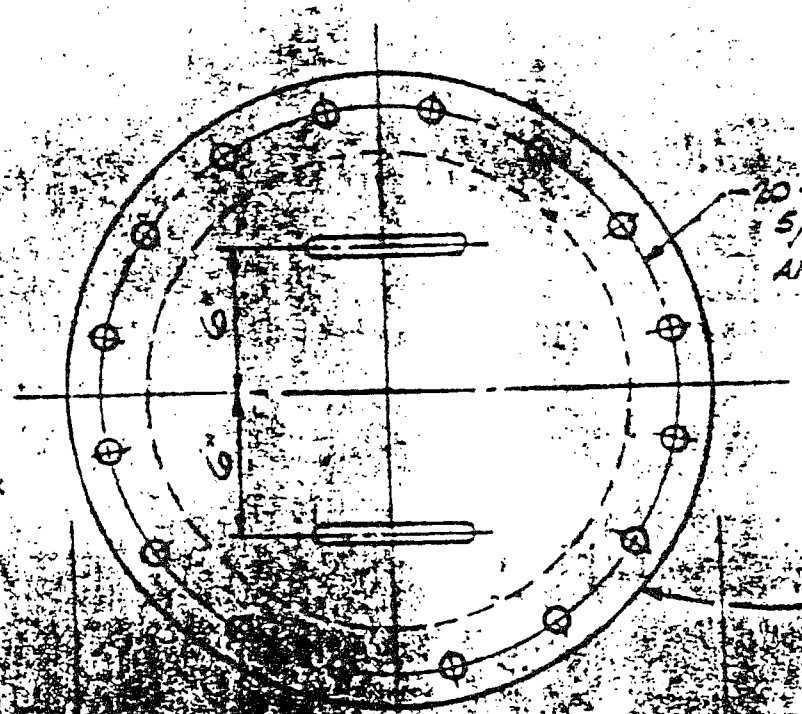

PRAIRIE TANK & CONST. CO.

24" DIA. ROOF MANWAY | SK RM-24

DATE [illegible]-69 BY WRW

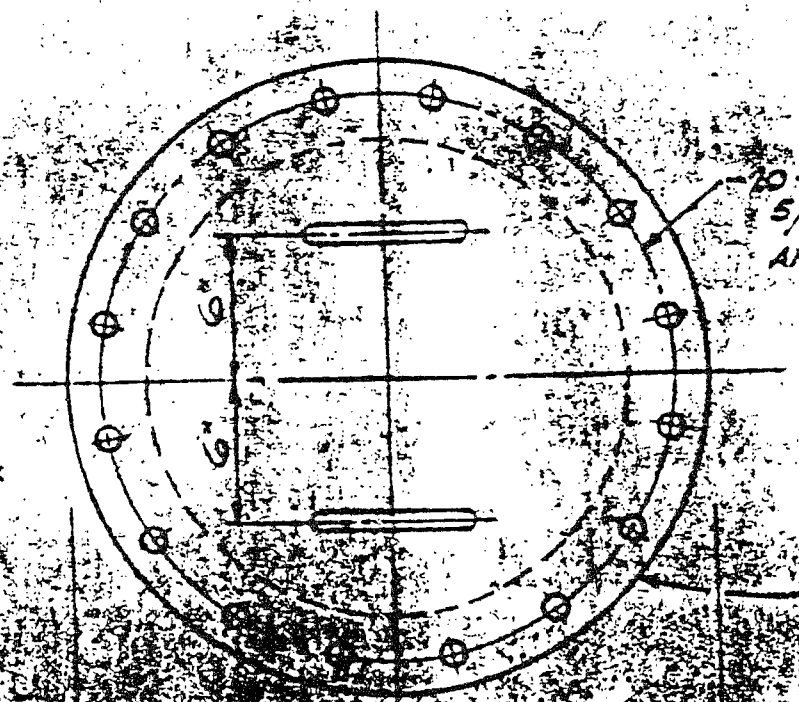

PRAIRIE TANK & CONST. CO. CHICAGO

24 DIA ROOF MANWAY | SK RM-24

[illegible] BY WRW

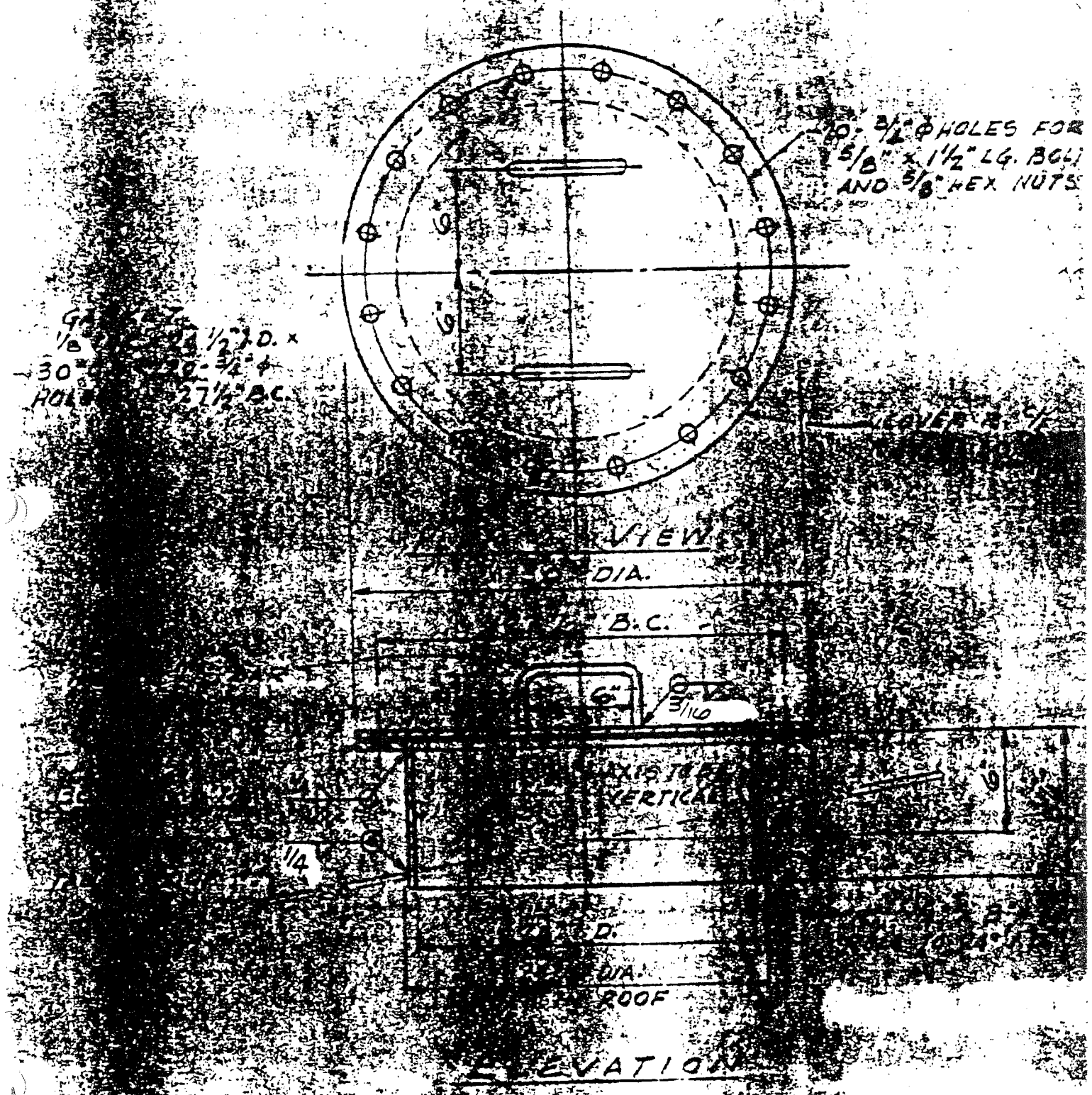

PRAIRIE TANK & CONST. CO. CHICAGO

24" DIA. ROOF MANWAY | SK RM-24

DATE [illegible]-69 BY WRW

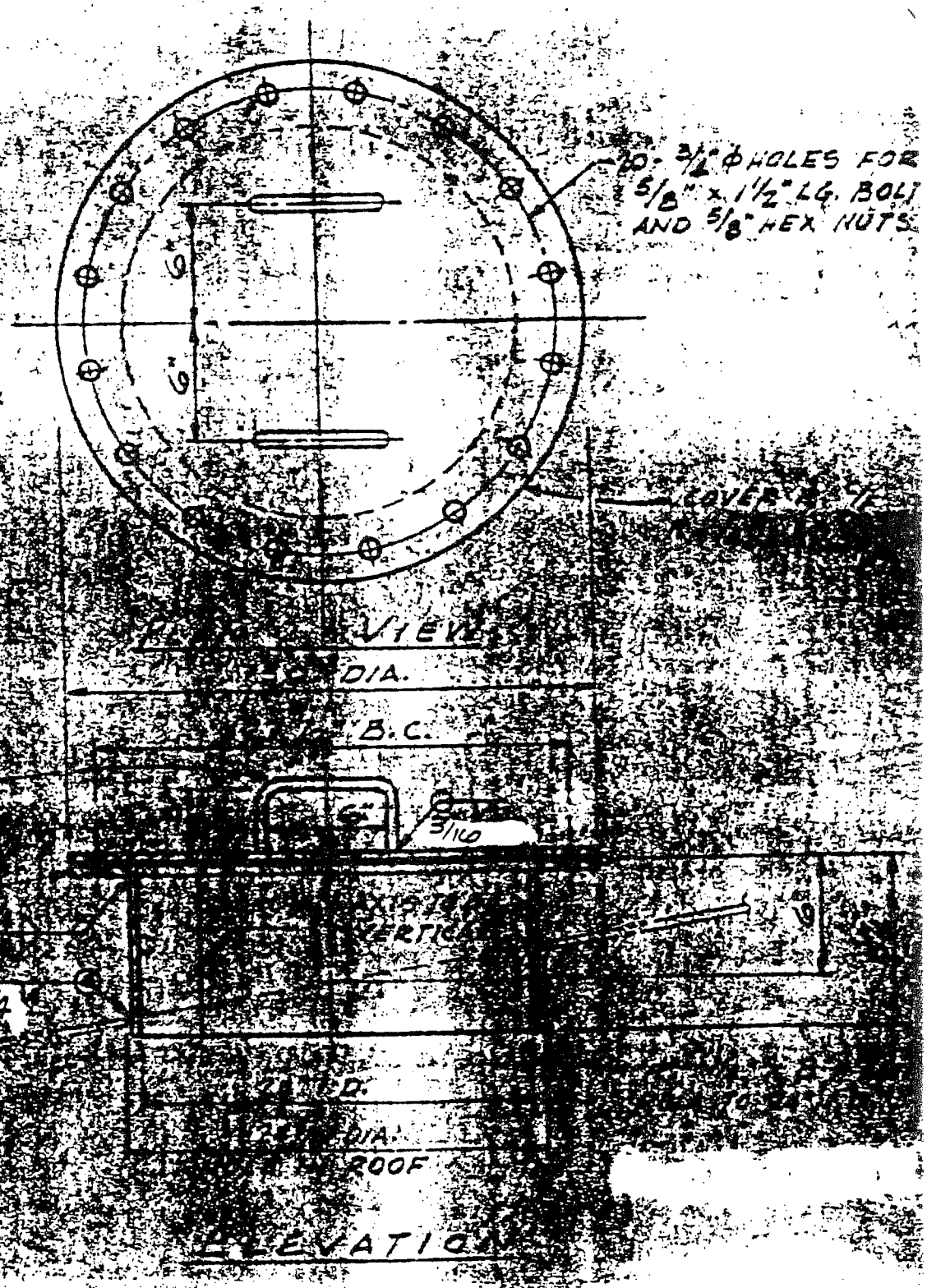

APPENDIX D-15

DESIGN DETAILS - EXISTING CHEMICAL TREATMENT UNIT

CHEM CLEAR DRAWING NO. M-0012-E

NO	DESCRIPTION	QTY
1	TREATMENT HOUSING [illegible]	1
2	CHEMICAL FEEDERS, [illegible] MODEL [illegible] - 1½" BELLOW [illegible] BALL VALVE WITH VITON O-RING	12
3	RECYCLE PUMPS - [illegible] SUCTION 5" DIA DISCHARGE 4" DIA	4
[illegible]	[illegible] DIA x [illegible] LONG BOLT WITH NUT & WASHERS	16
4	[illegible] SAMPLING VALVE [illegible]	4
5	FLOCCULATOR ROTORS	[illegible]
6	FLOCCULATOR ROTOR SEAL ASSEMBLY	[illegible]
7	BAFFLE PLATES 35½" x [illegible]	[illegible]
8	FLOCCULATOR ROTOR DRIVE, GRAINGERS [illegible]	1
[illegible]	[illegible] x 1½" LONG BOLT WITH NUT & WASHERS	4
[illegible]	GRAINGER CHAIN NO 50, [illegible] PITCH	10'
[illegible]	GRAINGER SPROCKET [illegible]	1
[illegible]	GRAINGER SPROCKET [illegible]	[illegible]
[illegible]	GRAINGER SPROCKET [illegible]	1
[illegible]	GRAINGER DOUBLE STRAND SPROCKET D50B5V [illegible]	1
[illegible]	GRAINGER ADJUSTING TIGHTENER [illegible]	[illegible]
[illegible]	GRAINGER [illegible] 1291-1	2
[illegible]	GRAINGER SPROCKET 50060 [illegible]	2
[illegible]	[illegible] BEARING	6
	[illegible] ACCESSORIES AND PARTS	
10	FLOW METER [illegible]	1
11	CONTROL PANEL	[illegible]
12	LEG ASSEMBLY	1
13	PH METER	1
14	PANEL AND OTHER LABELS	
15	[illegible] GUARD	1
16	[illegible] BOLT WITH NUT & WASHER (FOR [illegible] FEEDER [illegible])	5
17	[illegible] BOLT WITH NUT & WASHER (FOR [illegible] FEEDERS)	20
18	[illegible] NUT WITH FLAT WASHER (SS) FOR BAFFLE PLATES	[illegible]
19	[illegible] NUT WITH FLAT WASHER (SS) FOR [illegible] ASSEMBLY	[illegible]
[illegible]	[illegible] NUT WITH FLAT WASHER (SS) FOR SEAL ASSEMBLY	[illegible]
[illegible]	[illegible] NUT WITH FLAT WASHER (SS)	[illegible]

NO	DESCRIPTION	QTY
21	[illegible] FOR RECYCLE PUMPS	
1	[illegible] PVC PLATE	[illegible]
2	[illegible] DIA - 90° ELBOWS (SOCKET) PVC SCH 80	[illegible]
3	[illegible] DIA FLANGE (SOCKET) PVC 150 PSI	[illegible]
4	[illegible] DIA FLANGE (THREADED) STEEL 150 PSI	[illegible]
5	4" DIA FLANGE (SOCKET) PVC 150 PSI	[illegible]
6	4" DIA 90° ELBOW (SOCKET) PVC SCH 80	[illegible]
7	[illegible] DIA [illegible] PVC SCH 80	2
8	6" DIA STEEL FLANGES THREADED	4
9	2" DIA 90° ELBOW (SOCKET) PVC SCH 80	1
10	2" DIA TEE (SOCKET) PVC SCH 80	3
11	[illegible] MALE ADAPTER SOCKET/[illegible] - PVC	[illegible]
12	5" DIA SCH 80 PIPE - PVC	10'
13	6" DIA SCH 80 PIPE - PVC	10'
14	2" DIA SCH 80 PIPE - PVC	20'
15	[illegible] ID [illegible] OD CLEAR VINYL TUBING	100'
16	[illegible] ID x 1" OD CLEAR VINYL TUBING	35'
17	[illegible] DIA PVC SCH 80 PIPE	[illegible]
18	[illegible]	[illegible]
19	[illegible]	[illegible]
20	[illegible]	[illegible]
21	[illegible] HEX HEAD BOLTS WITH [illegible] FLAT WASHERS	[illegible]
22	[illegible]	[illegible]
23	[illegible] FLAT WASHER	[illegible]
24	[illegible] DIA 90° ELBOW SOCKET TYPE PVC SCH 80	[illegible]
25	[illegible] DIA MALE ADAPTER SOCKET [illegible] PVC	[illegible]
26	[illegible] BUSHING - SOCKET/SOCKET PVC	[illegible]
27	[illegible] FEMALE ADAPTER - SOCKET [illegible] PVC	[illegible]
28	[illegible]	5
29	[illegible]	[illegible]
30	[illegible]	[illegible]
31	[illegible] THREADED COUPLING [illegible] PVC SCH 80	[illegible]
32	[illegible]	[illegible]
33	[illegible] CLAMPS [illegible] DIA [illegible]	50
34	[illegible] MALE ADAPTER SOCKET [illegible] PVC	[illegible]
35	[illegible]	[illegible]
36	[illegible]	[illegible]

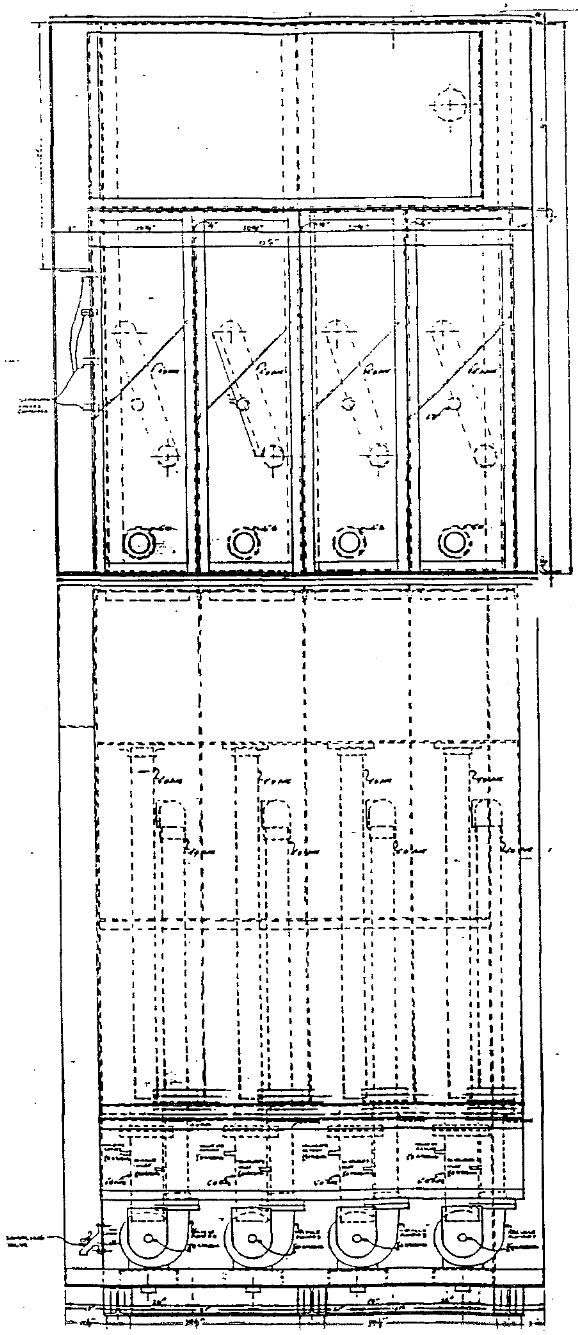

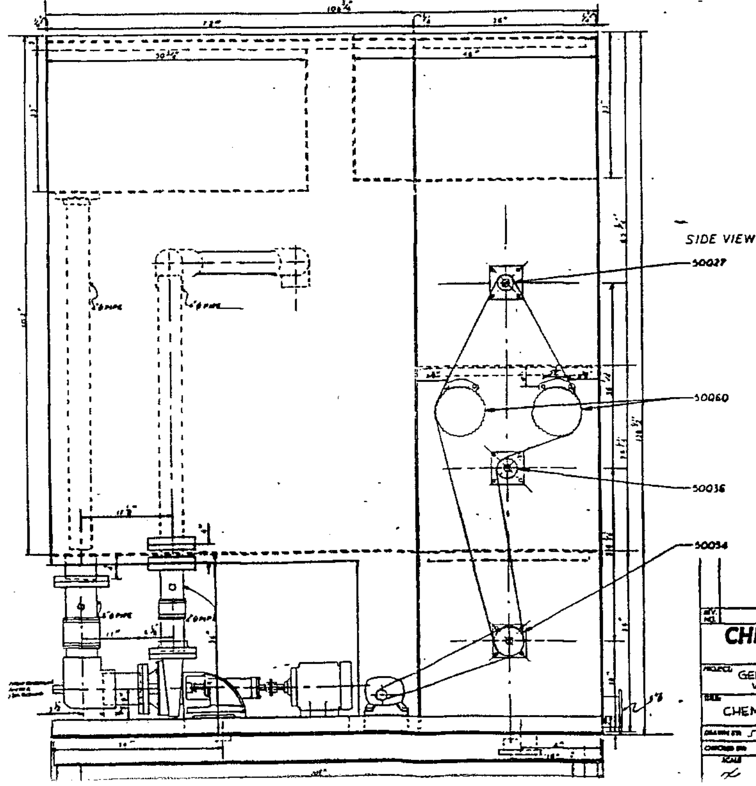

REV. NO.	DESCRIPTION		

CHEM CLEAR INC.

WAYNE, PA.

PROJECT: GENERAL EQUIPMENT WAYNE, PA.

TITLE: CHEMICAL TREATMENT UNI[T]

DRAWN BY: S.T. [illegible] DATE: [illegible]

DRAWING NO.: M-0012-E

APPENDIX D-16

DESIGN DETAILS - EXISTING CLARIFIER INTERNAL ASSEMBLY

CHEM CLEAR DRAWING NO. M-0010-D

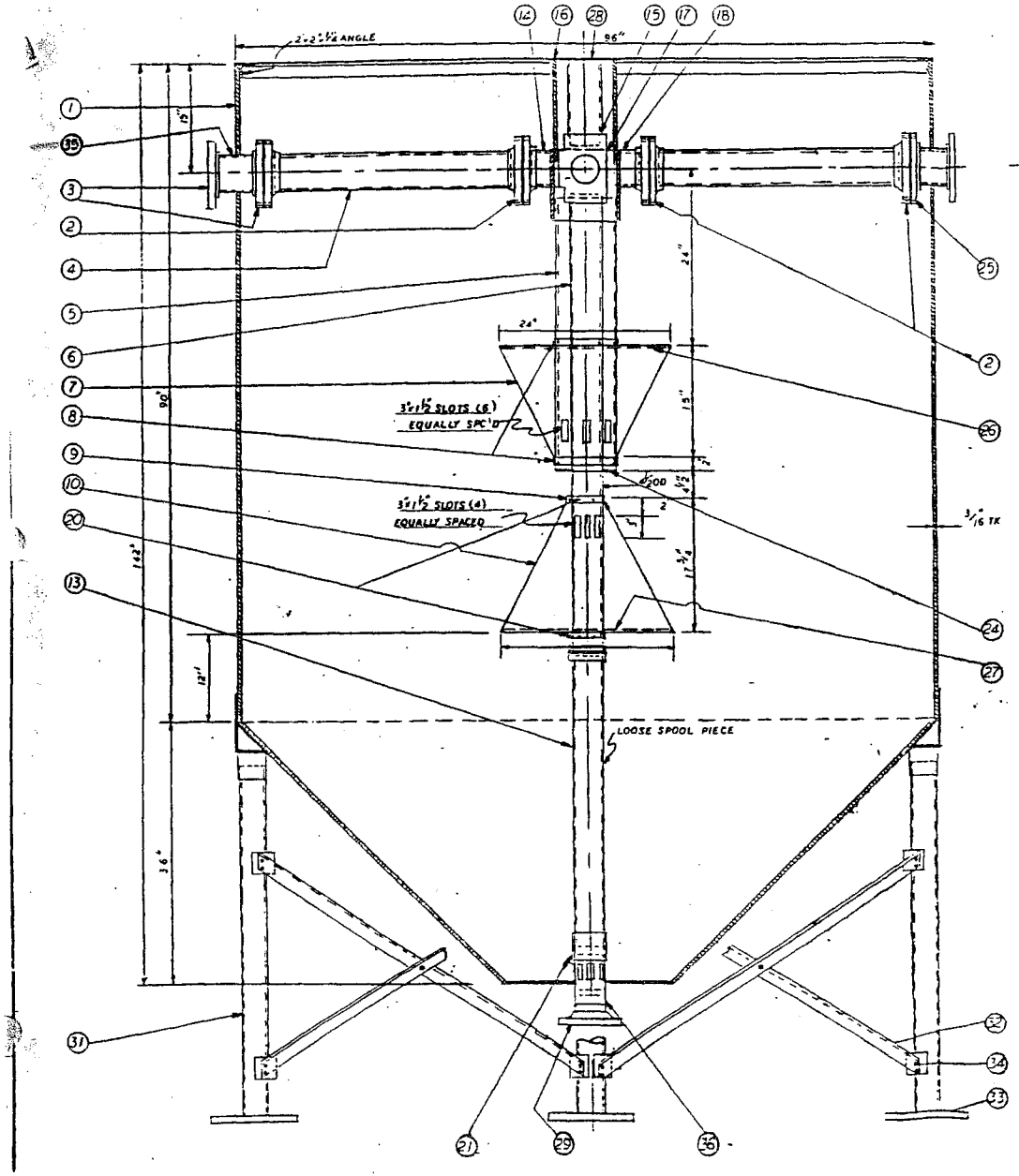

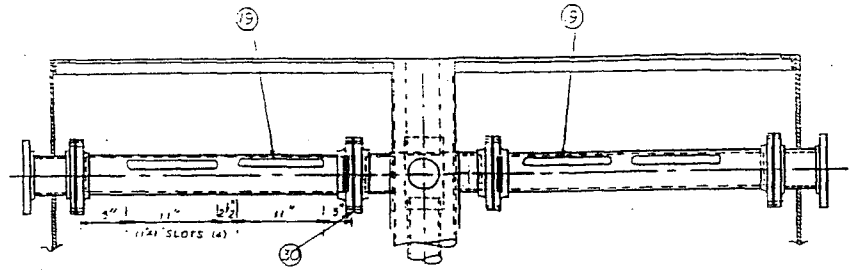

NO.	DESCRIPTION	QTY	MAT
1	TANK - 96" DIA. x 90" TALL W/36" - 45° CONE BOTTOM	1	C.S.
2	4" FLANGE (SOCKET) 150# A.S.A.	12	P.V.C.
3	4" ø WELDING FLANGE STEEL 150# A.S.A.	8	STL
4	4" DIA. X 33" LONG PIPE - SCH. 40	2	P.V.C.
5	8" DIA. X 39" LONG PIPE - SCH. 40	1	P.V.C.
6	4" DIA. X 39 1/2" LONG PIPE SCH 40	1	P.V.C.
7	CONE 8 5/8" ø x 24" ø x 15" TALL - 1/16" TK WALL - (60° CONE)	1	P.V.C.
8	8" COUPLING (SOCKET) - SEE NOTE #2	2	P.V.C.
9	4 1/2" I.D. x 1/2" TK. RING - SEE NOTE #1	2	P.V.C.
10	CONE - 4 1/2" ø x 26" ø x 17 3/4" TALL - 1/16" TK WALL - (60° CONE)	1	P.V.C.
13	4" DIA x 39 1/2" LONG PIPE - SCH 40	1	P.V.C.
14	4" DIA. x 3" LONG PIPE - SCH-40	1	P.V.C.
15	4" TEE - (SOCKET) - SCH 40	1	P.V.C.
16	8" DIA. X 12" LONG PIPE - SCH. 40	1	P.V.C.
17	8" COUPLING (SOCKET) - SCH 80	1	P.V.C.
18	4" DIA. X 2 1/2" LONG PIPE SCH 40	3	P.V.C.
19	4" DIA X 39" LONG PIPE SCH 80 W/4" x 1" SLOTS (4 [illegible]	2	P.V.C.
20	NO. 12 ROUND HEAD SCREWS	16 MIN	S.S.
21	4" COUPLING (SOCKET) SCH 40	2	P.V.C.
24	4 1/2" I.D. x 8" O.D. x 1/4" TK RING	1	P.V.C.
25	3/8" DIA. x 3" LONG BOLT W/ 1 NUT & 2 WASHERS	64	S.S.
26	8 5/8" I.D. x 23 1/2" O.D. - 1" FLAT EXPANDED METAL	1	S.S.
27	4 1/2" I.D. x 23 1/2" O.D. 1" FLAT EXPANDED METAL - OR 1" MESH	1	S.S.
28	4" DIA. x 12" LONG PIPE - SCH. 40	1	P.V.C.
29	4" FLANGE (SOCKET) 150# A.S.A.	1	P.V.C.
30	4" FULL GASKETS 1/8" THICK	8	NEOP
31	5" DIA PIPE SCH 40 X 47" LONG	4	STL
32	2" x 2" x 1/4" ANGLE x 72" LONG (APPOX)	8	STL
33	12" DIA. FOOT PLATE x 3/4" THICK	4	STL
34	1/2" DIA. BOLTS x 1" LONG W/NUT & WASHER	32	STL
35	4" DIA PIPE	4	STL
36	4" DIA PIPE ASSEMBLY (SCH 40)	1	STL

NOTES:
1. CUT TWO 1/2" TK RING FROM 4" ø COUPLING (PART #2) (USE IT AS (PART #9) TO LOCK THE CONE (PART #10) IN POSITION.
2. CUT TWO 4" RINGS FROM A 8" COUPLING (USE ONE TO LOCK THE CONE (PART #7) IN POSITION) THE OTHER RING TO LOCK THE SCREEN (PART #26) IN POSITION.
3. FOR SUBASSEMBLY DETAILS OF PARTS #4-18.
4. FOR CONES (PARTS #7 & #10) & SCREENS (PARTS #26 & #27)
5. FOR TANK (PART #1) & SUPPORT ASS'Y (PARTS #31, 32, 33)
6. PARTS #7 & #10 TO BE SECURED WITH NO. 12 ROUND HEAD S.S. SCREWS (PART #20) MIN 4 SCREWS EA. PART #8 & 9

REV. NO.	DESCRIPTION	REV. BY	DATE	APPROVED BY

CHEM CLEAR INC
985 OLD EAGLE SCHOOL RD.
WAYNE, PA. 19087

PROJECT: GENERAL EQUIPMENT

TITLE: 75 GPM GRAVITATOR, INTERNAL ASS'Y

DRAWN BY: S.J. FARABELLI — DATE: 3-26-81

CHECKED BY: — DATE:

SCALE	DRAWING NO.	SHEET	REV.
AS NOTED	M-0010-D		

APPENDIX D-17

DESIGN DETAILS - EXISTING SECONDARY TREATMENT TANKS

SHEET NOS. 1 THROUGH 4

REV. 1

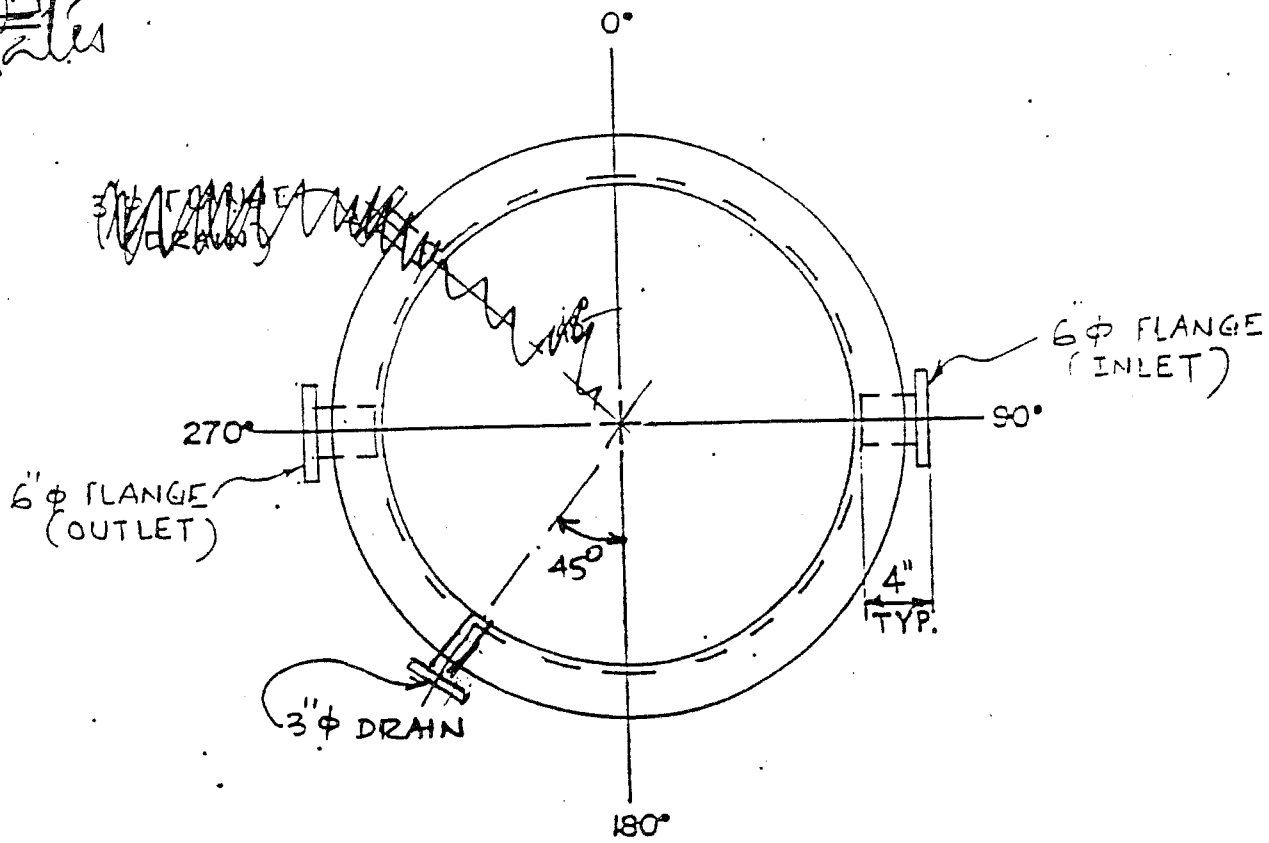

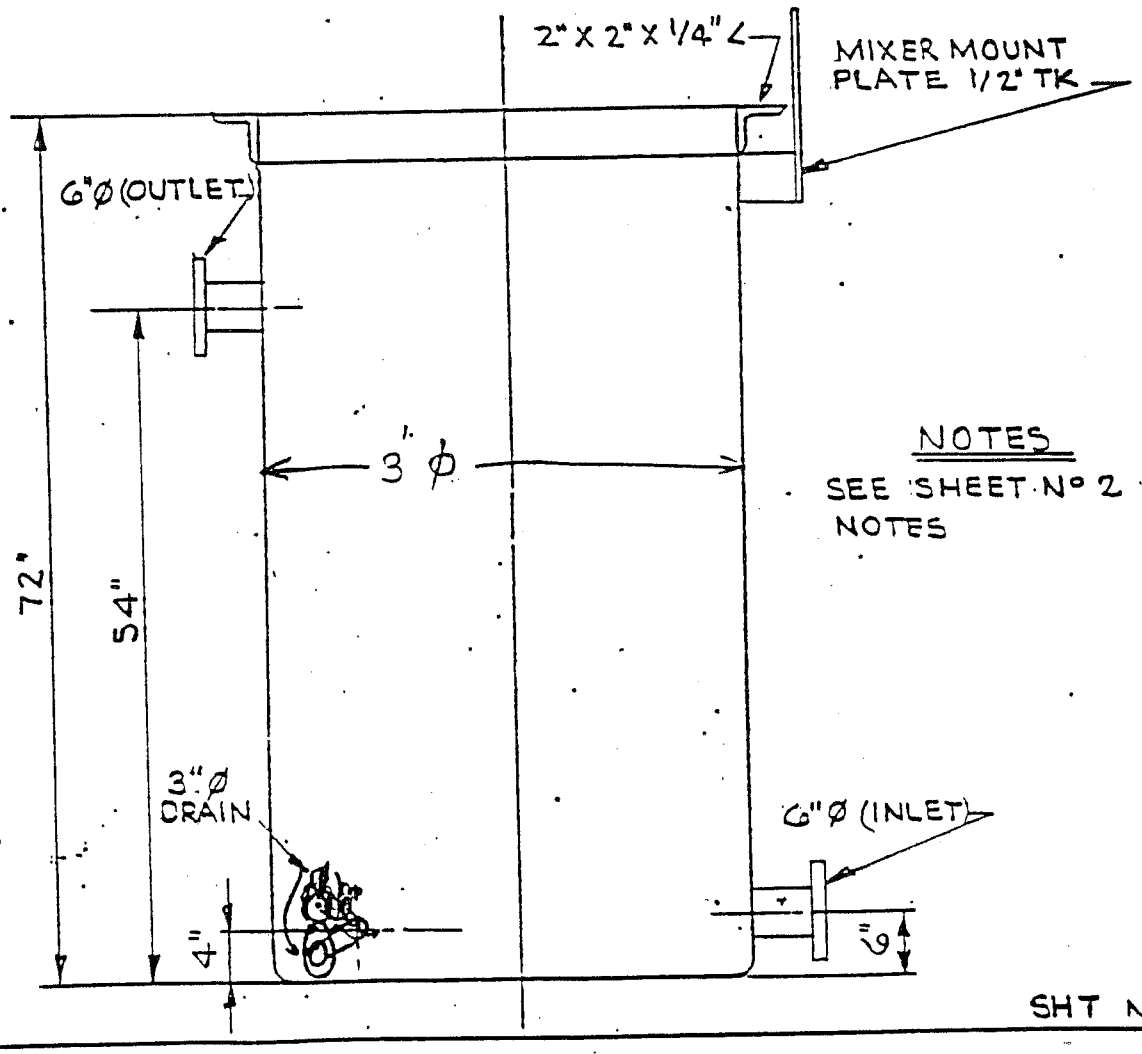

NOTES

SEE SHEET Nº 2 FOR NOTES

SHT Nº 1

REV. 1

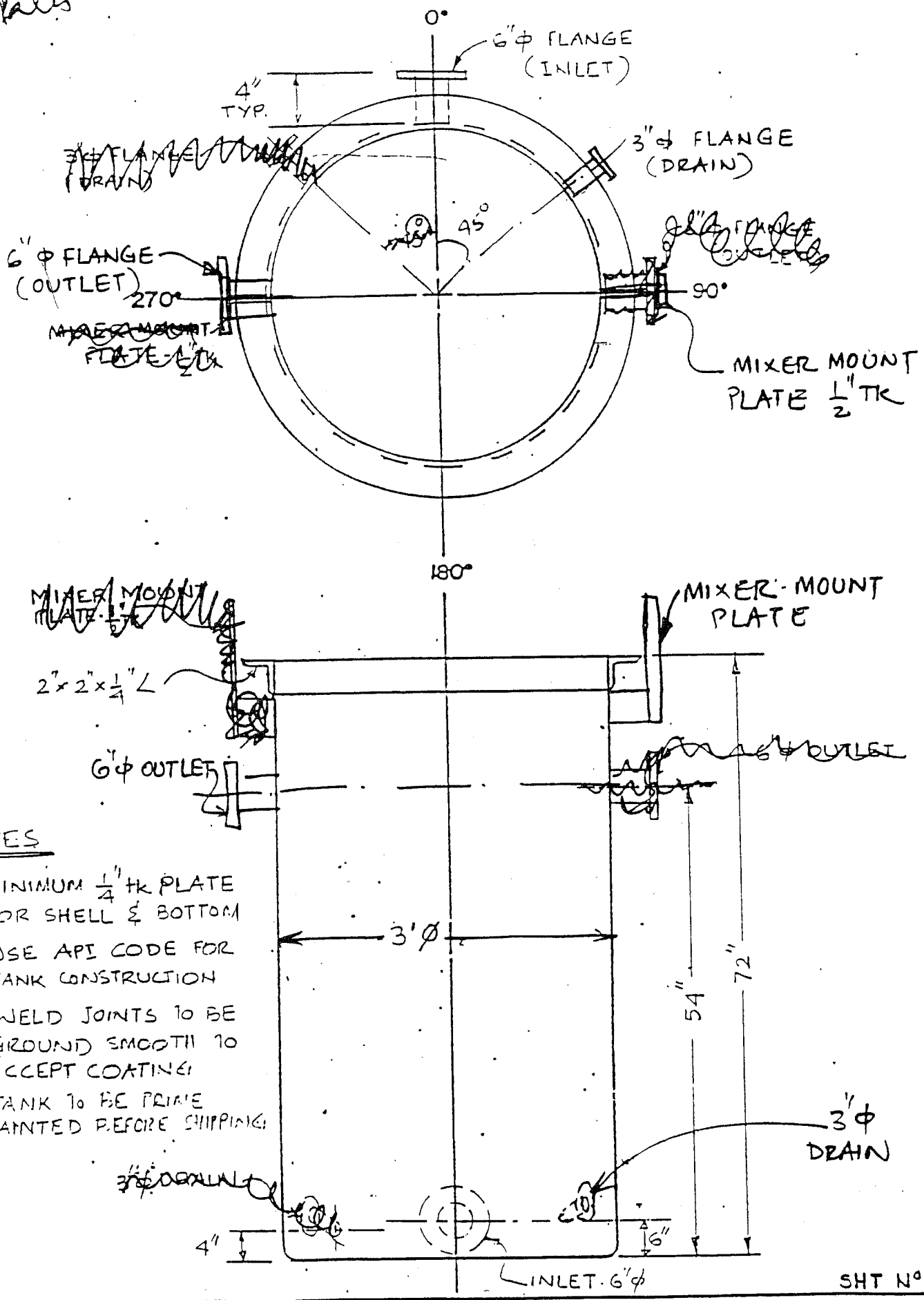

NOTES

1. MINIMUM 1/4" tk PLATE FOR SHELL & BOTTOM
2. USE API CODE FOR TANK CONSTRUCTION
3. WELD JOINTS TO BE GROUND SMOOTH TO ACCEPT COATING
4. TANK TO BE PRIME PAINTED BEFORE SHIPPING

SHT Nº 2

REV. 1

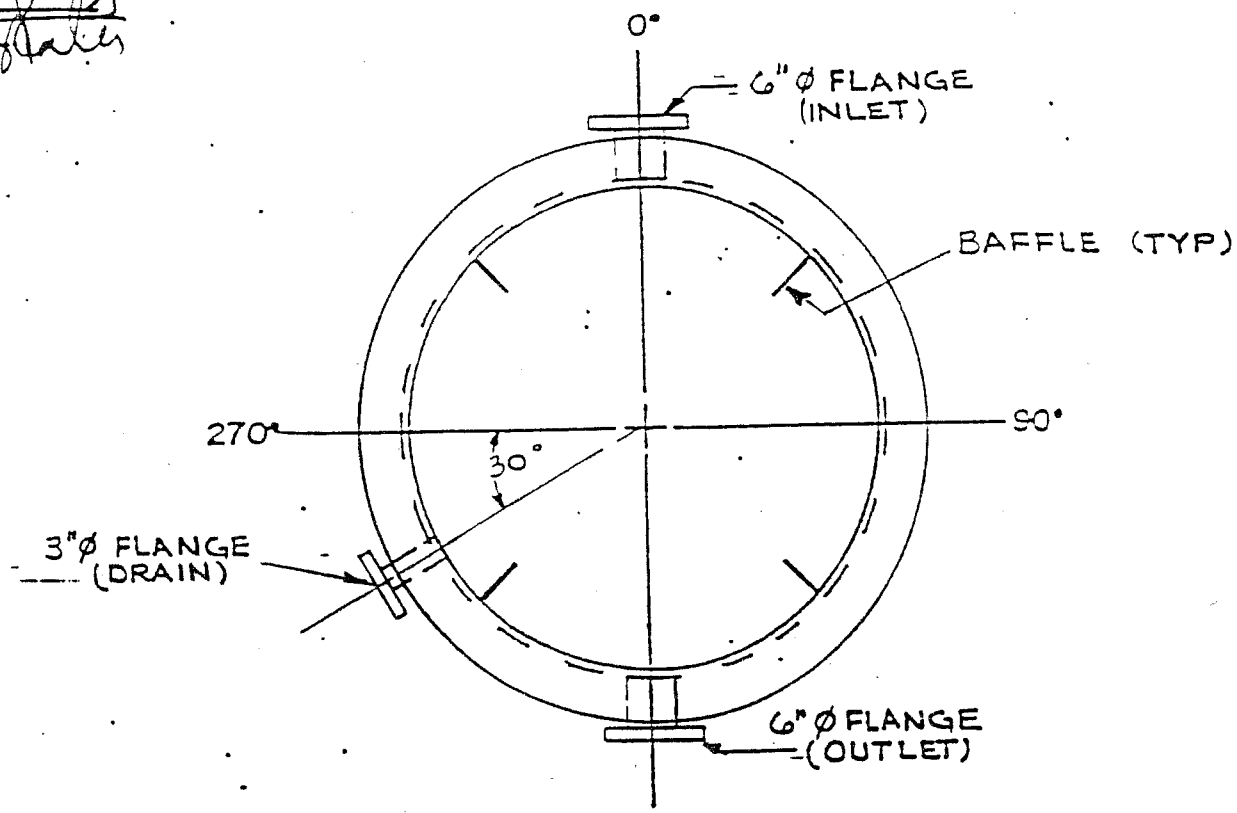

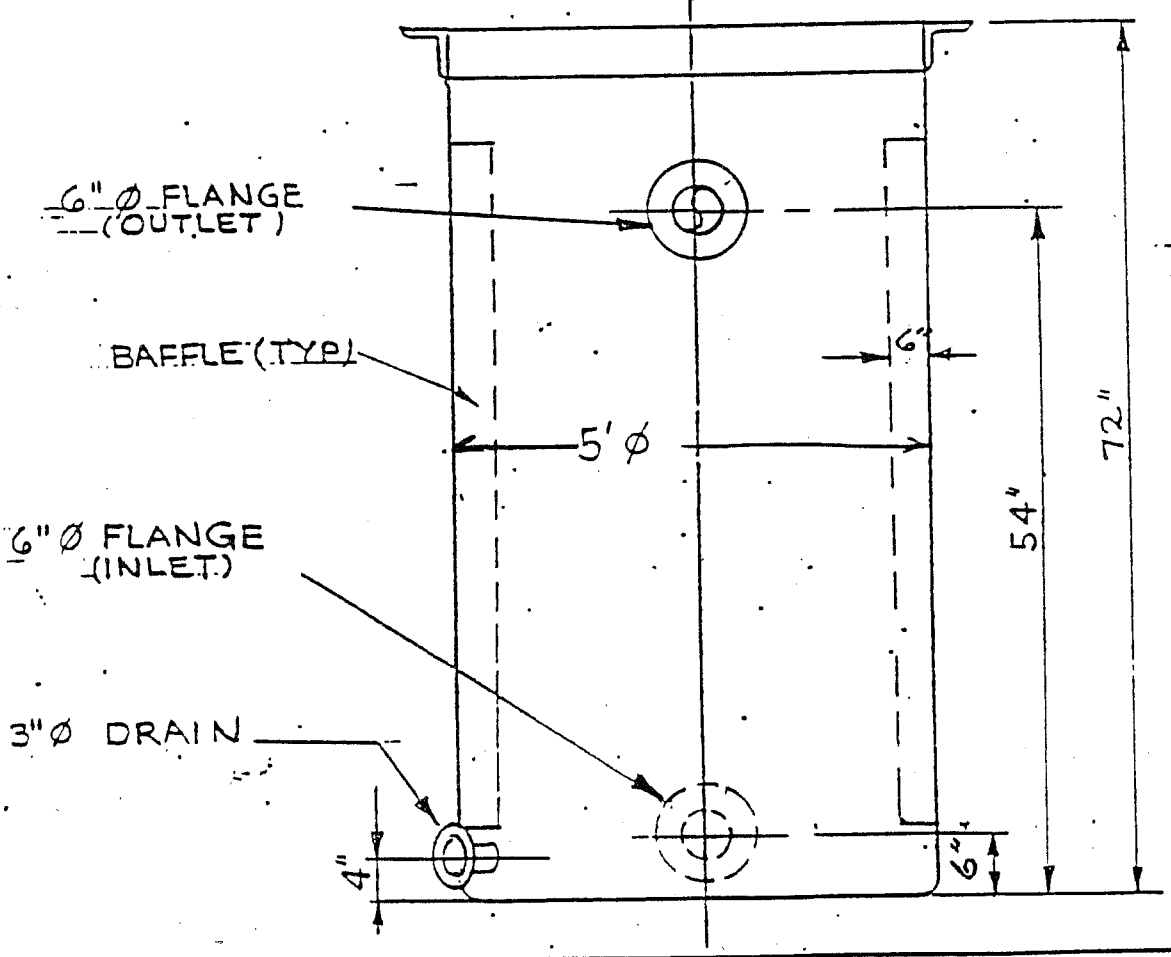

NOTES:
SEE SHEET Nº 2 FOR NOTES

SHT Nº 3

REV. 1

TANK

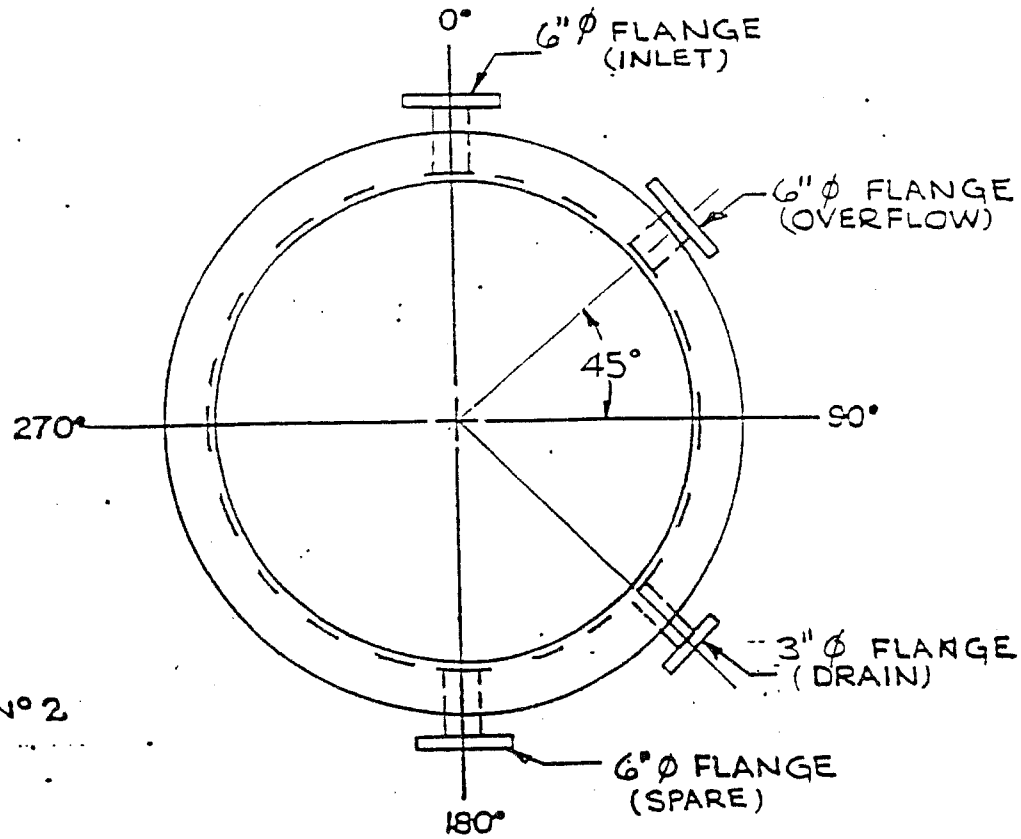

NOTES

SEE SHEET Nº 2 FOR NOTES ...

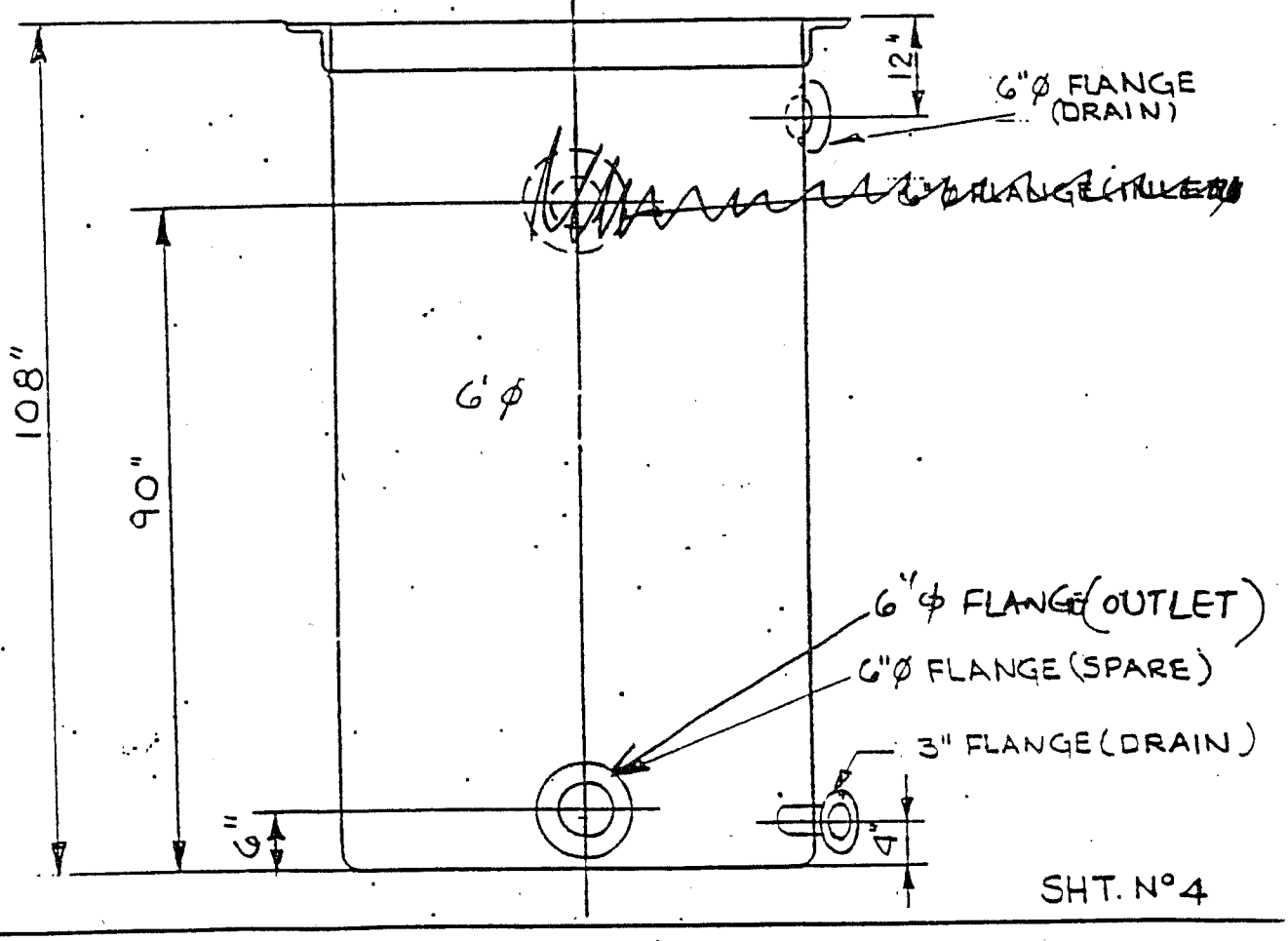

SHT. Nº 4

APPENDIX D-18

DESIGN DETAILS - EXISTING SLUDGE SUMP

R.A. MORLEY CO. DRAWING NO. 4033-D

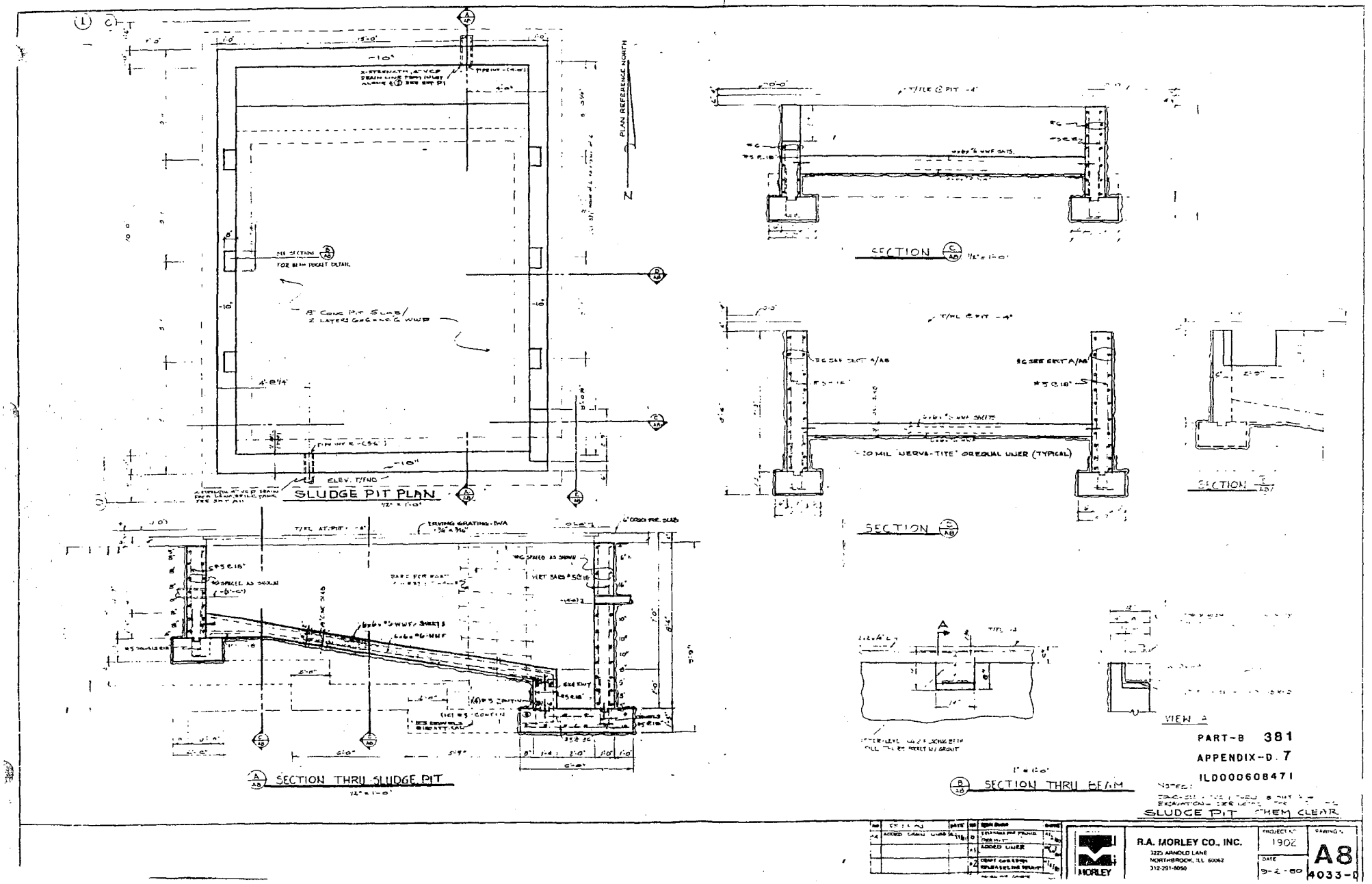

PART-B 381

APPENDIX-D.7

ILD000608471

APPENDIX D-19

DESIGN DETAILS - EXISTING SLUDGE CONDITIONING TANK

CHEM CLEAR DRAWING NO. 4068-C

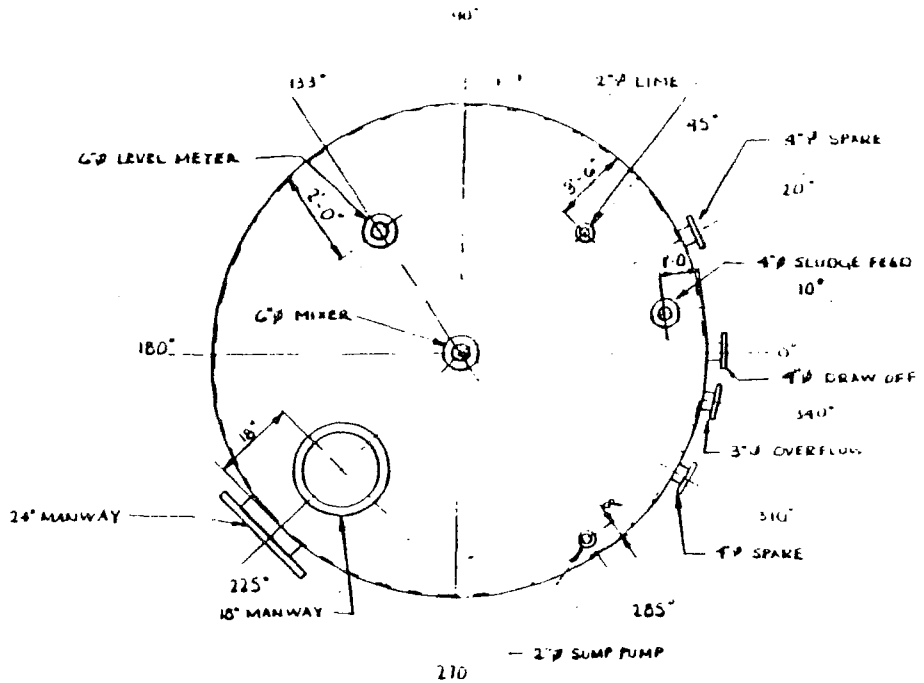

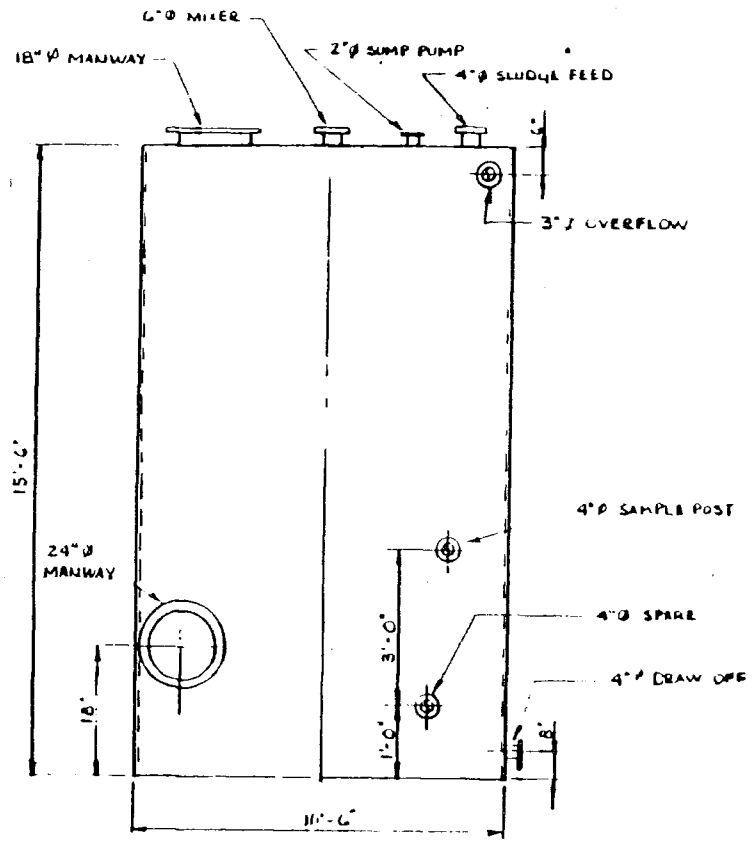

REV. NO.	DESCRIPTION	REV. BY	DATE	CHECKED BY

CHEM CLEAR INC
905 OLD EAGLE SCHOOL RD.
WAYNE, PA. 19087

PROJECT: CHICAGO TREATMENT PLANT
CHICAGO, ILLINOIS

TITLE: SLUDGE CONDITION TANK

DRAWN BY: N. MORRIS	DATE: 2-3-88
CHECKED BY:	DATE:

SCALE	DRAWING NO.	SHEET	REV.

APPENDIX D-20

EXISTING REACTOR VESSEL DETAILS

CLEAN HARBORS DRAWING NO. 2916-M-01

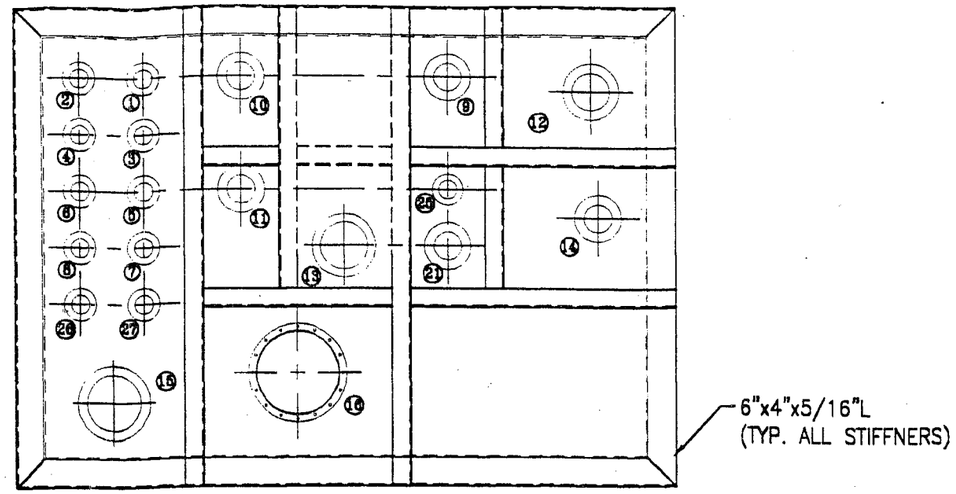

TOP ELEVATION

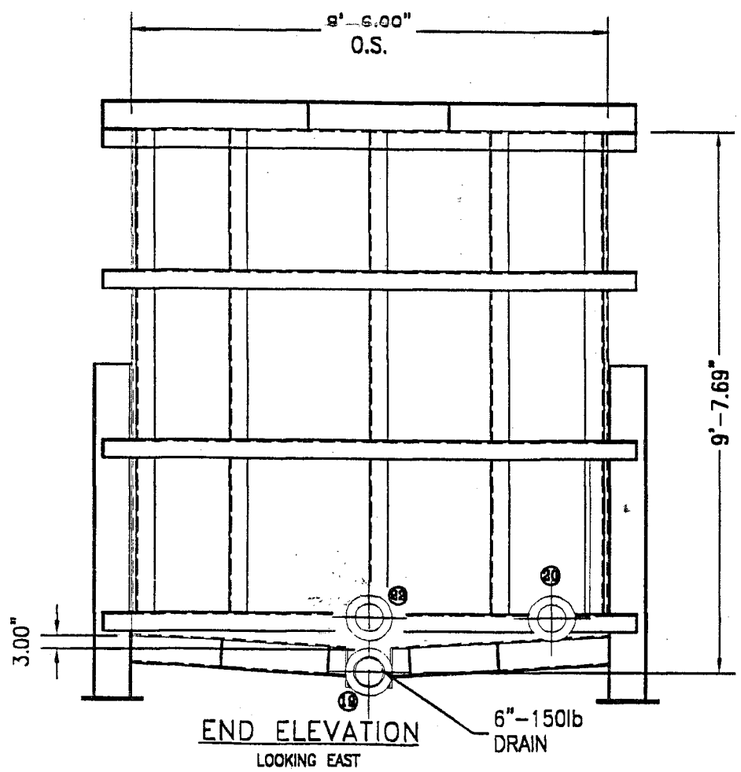

END ELEVATION
LOOKING EAST

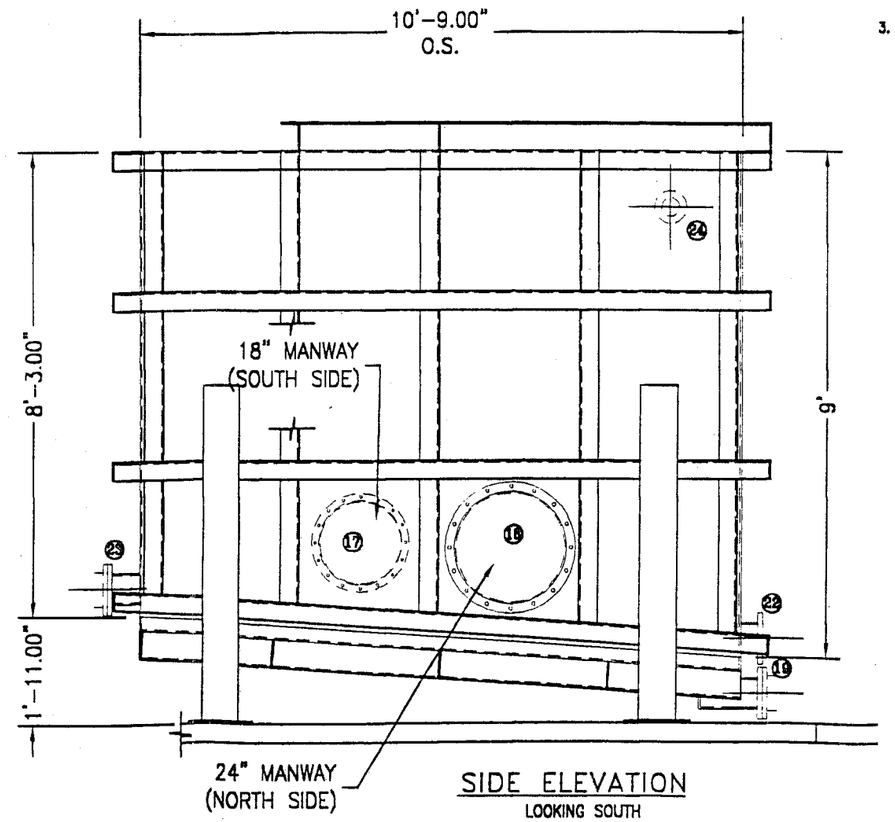

SIDE ELEVATION
LOOKING SOUTH

NOTES:

1. TOP, BOTTOM AND SIDES 3/8" C.S. PLATE
2. ALL STIFFENERS 6"x4"x5/16"L WELDED INTERMITTENTLY 3"-9"
3. INTERIOR TO BE SANDBLASTED AND COATED WITH CEILCRETE 6650 AR PER MANUFACTURERS SPECIFICATIONS (OR EQUAL)

AMOS TURNER
19471
LICENSED PROFESSIONAL ENGINEER OF ILLINOIS

Amos Turner
EXP. DATE 11-30-2001

4/16/01

C	REPLACEMENT UNIT FOR CHAMBER #3	AAA			4/16/01
B	REPLACE COVER, CHANGE NOZZLES AND REMOVE CHAMBERS 1 AND 2	AAA			3/1/01
A	RCCR PART B SUBMITTAL				
REV.	DESCRIPTION	DRWN.	CHKD.	APPR.	DATE

CleanHarbors
ENVIRONMENTAL SERVICES, INC.
1501 Washington Street
Braintree, Massachusetts 02185
Telephone (781) 849-1800

TITLE
CLEAN HARBORS SERVICES, INC.
11800 S. STONY ISLAND AVE.
CHICAGO, ILLINOIS 60617

PROPOSED
REACTOR VESSEL DETAILS

PROJECT NO. E-2916
SCALE 3/8"=1'-0"
DRAWING NO. 2916-M-01

APPENDIX D-21

MODIFICATIONS IN EFFLUENT HOLDING TANK

CHEM CLEAR DRAWING NO. 4062-C

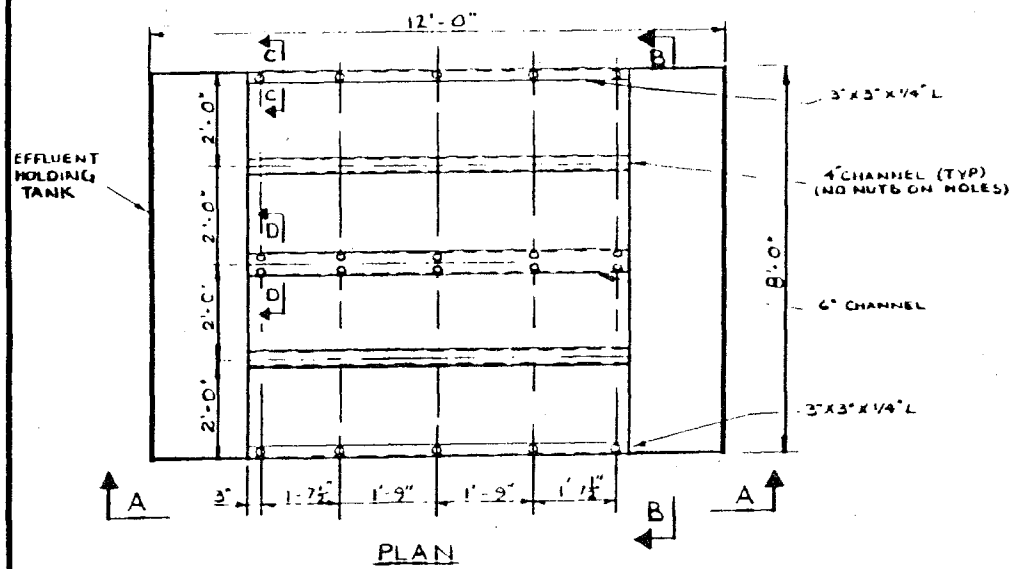

PLAN

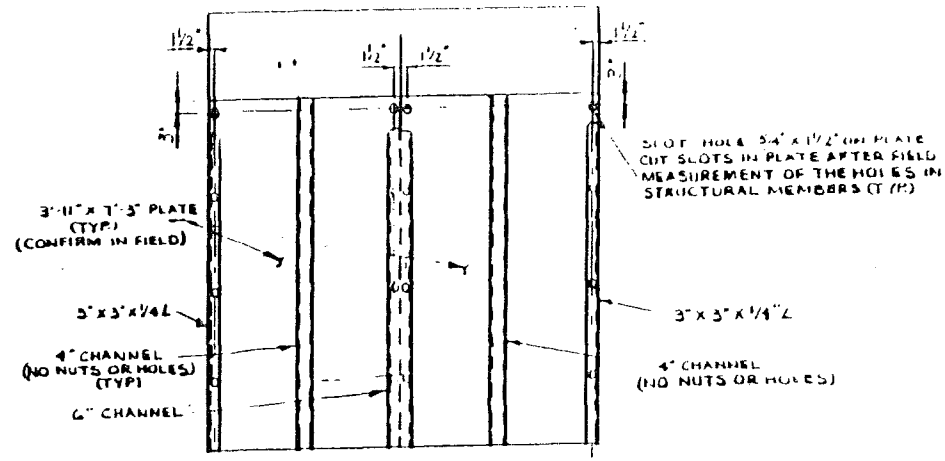

SECTION B-B

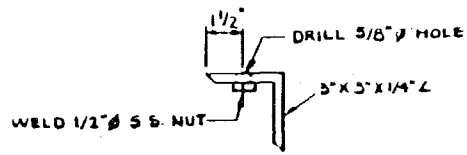

SECTION C-C
(NTS)

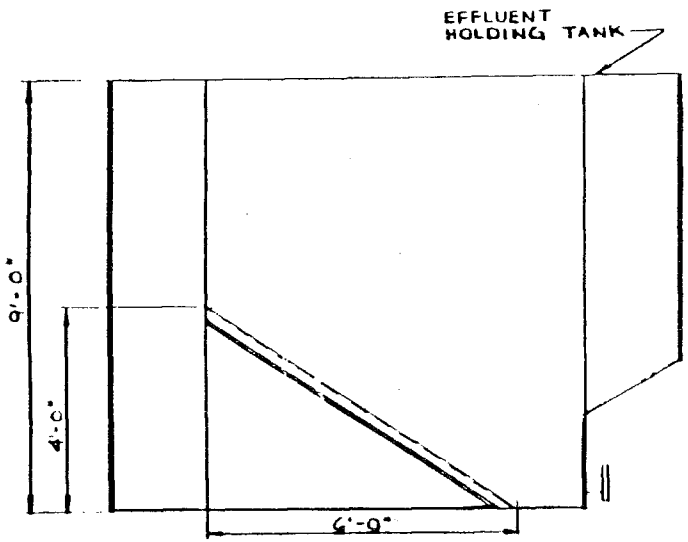

SECTION A-A

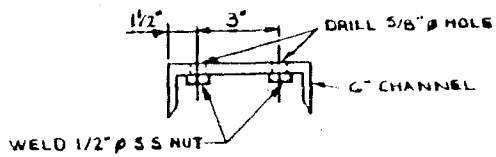

SECTION D-D
(NTS)

REV. NO.	DESCRIPTION	REV. BY	DATE	CHECKED BY

CHEM CLEAR INC
985 OLD EAGLE SCHOOL RD.
WAYNE, PA. 19087

PROJECT: CHICAGO TREATMENT PLANT
CHICAGO ILL.

TITLE:
MODIFICATIONS IN EFFLUENT HOLDING TA

DRAWN BY: N. MORRIS	DATE: 9/12/88
CHECKED BY:	DATE:

SCALE	DRAWING NO.	SHEET	REV.

APPENDIX D-22

DESIGN DETAILS - WASTE STORAGE TANK

100 mils DOW 411 LINER

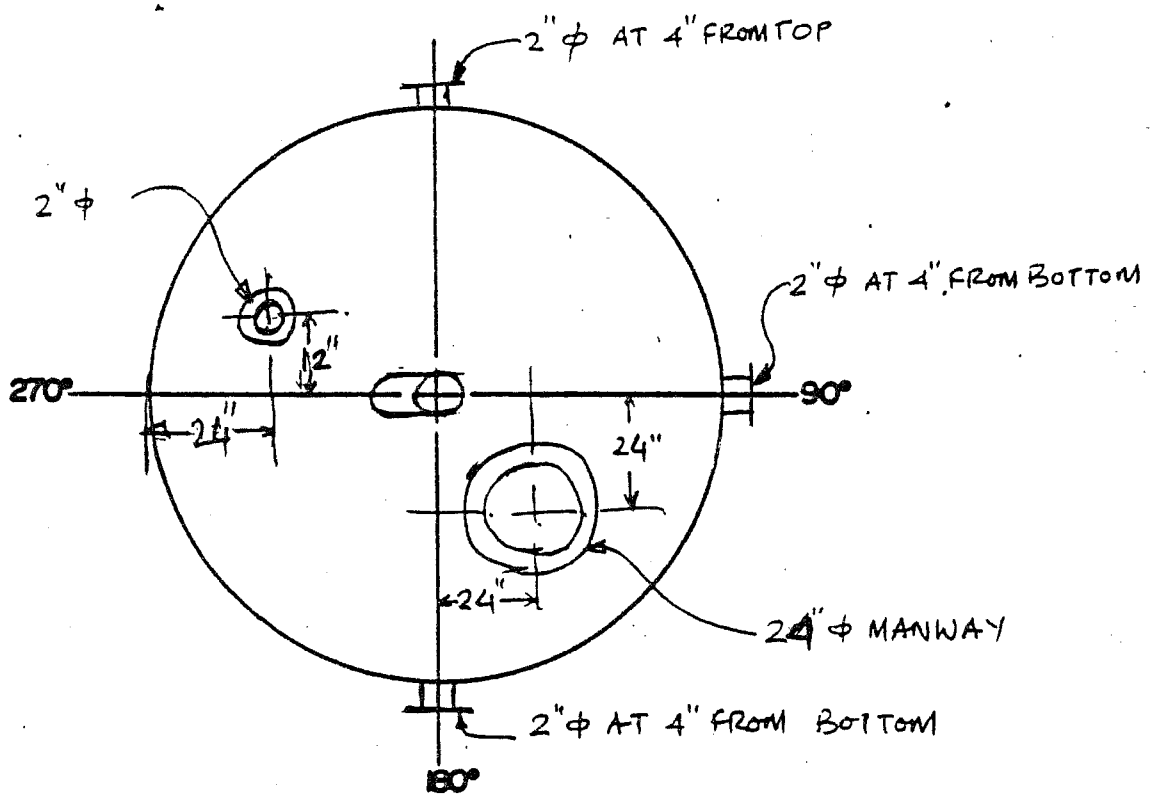

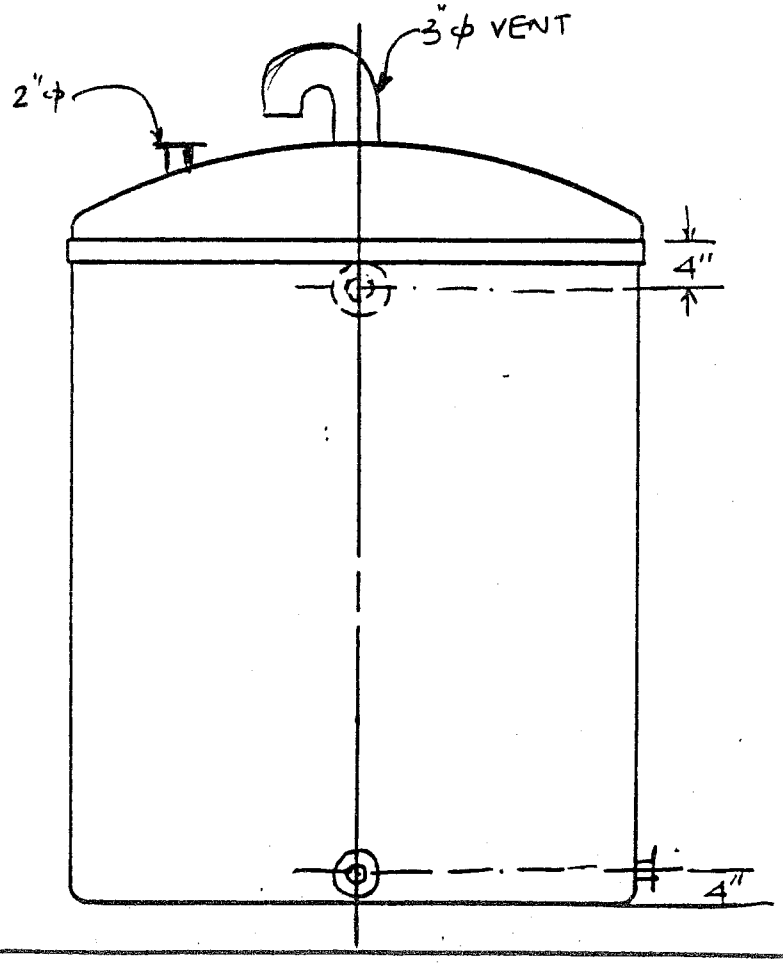

APPENDIX D-23

TANK DETAILS OILY WASTE WATER PRETREATMENT

CHEM CLEAR DRAWING NO. 4034-D

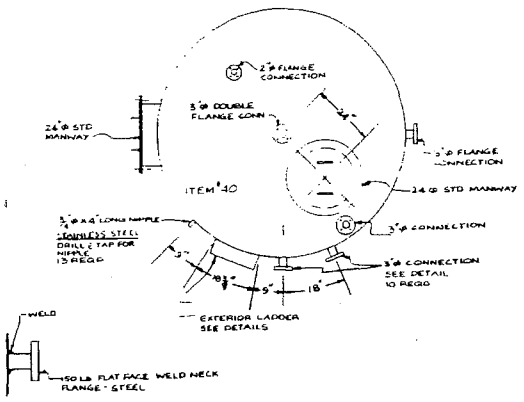

TYPICAL FLANGE CONNECTION
SCALE - NONE

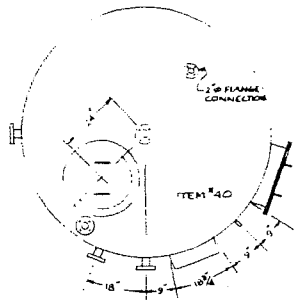

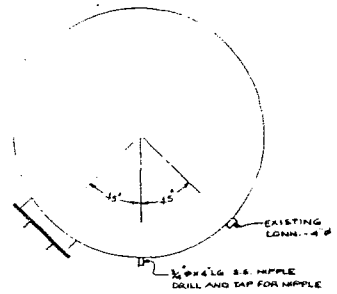

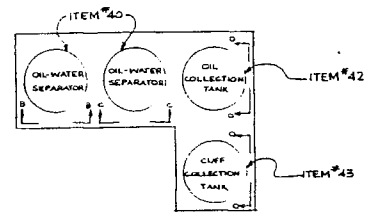

TANK LAYOUT
SCALE 1/8" = 1'-0"

NOTE:
1. THE TANKS (ITEM #40, 42 & 43) ARE 1/4" THICK
2. EQUIPMENT NOS ARE KEYED INTO DESCRIPTION TABLE OF FLOW DIAGRAM DWG # 4025-D

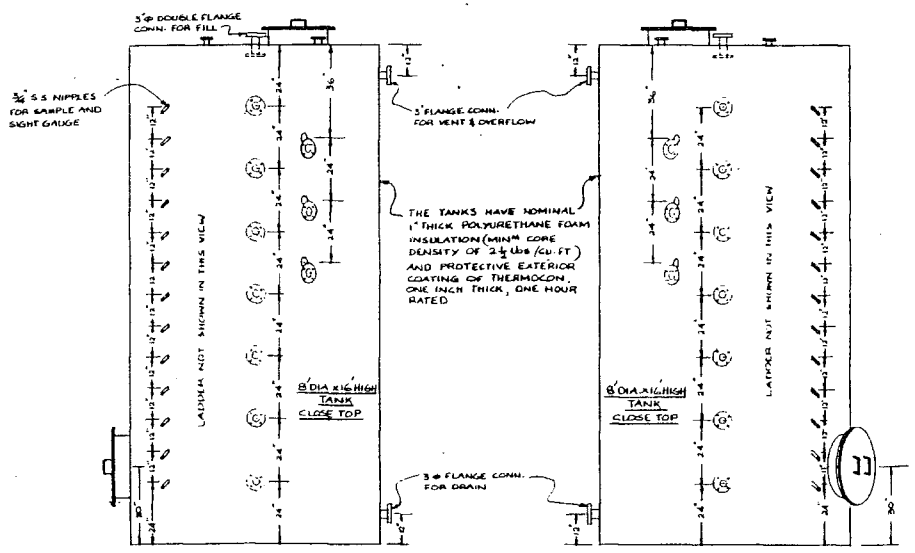

SECTION B-B

SECTION C-C

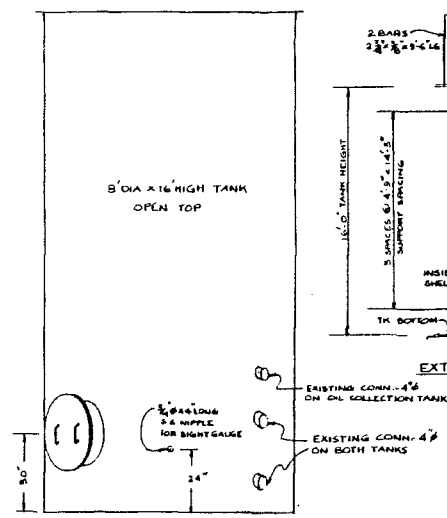

SECTION D-D

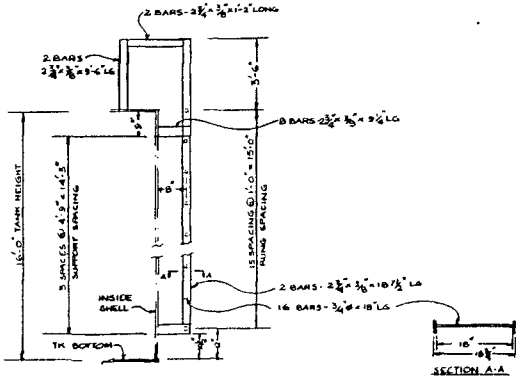

EXTERIOR LADDER
SCALE - NONE

SCALE 1/2" = 1'-0"

REV. NO.	DESCRIPTION	REV. BY	DATE	CHECKED BY
2	ELIMINATED MANWAY DETAIL, ADDED 2"Ø & 3"Ø CONN. ON ITEM #40 ADDED NOTE	[illegible]	4/2/83	
1	CHANGED 3/4"Ø NIPPLES, 3"Ø CONN., ADDED MANWAYS IN OPEN TOP TANKS	[illegible]	1/19/83	

CHEM CLEAR INC
985 OLD EAGLE SCHOOL RD.
WAYNE, PA. 19087

PROJECT: CHICAGO TREATMENT PLANT
CHICAGO, ILL.

TITLE: TANK DETAILS
OILY WASTE WATER PRE TREATME

DRAWN BY: B PATEL	DATE: 11-19-82
CHECKED BY:	DATE:

SCALE	DRAWING NO.	SHEET	REV.
AS SHOWN	4034-D		

APPENDIX D-24

PROFESSIONAL ENGINEER CERTIFICATION OF ASSESSMENT
OF THE EXISTING RCRA-EXEMPT INORGANIC TREATMENT SYSTEM

HOYER-SCHLESINGER-TURNER inc.
ENGINEERS CONSTRUCTORS
300 west adams street chicago illinois 60606 telephone 263-0556 area code 312

June 10, 1991

Mr. Gregory Jones
Operating Manager
CLEAN HARBORS, INC.
11800 S. Stony Island Ave.
Chicago, Illinois 60617

Subject: HST Project No. 1722
Status of Inspection Report for Process Tanks:
Primary Storage Tank #2 - Item No. 10
Mix Tank #4 - Item No. 13
Sludge Concentrator Tank #3 - Item No. 24
Concrete Sludge Sump - Item No. 22
Piping - pressure test

Dear Mr. Jones:

During my visits to the Clean Harbors facility on May 29, 1991 and on June 7, 1991, I observed the internal recoating of Primary Storage Tank #2. As I understand, the tank was previously coated in 1984. Low voltage spark testing for internal coating system thickness, showed thicknesses less than 15 mils in many places. The decision was made to recoat the entire internal surface of the tank. Removal of the existing coating was done by sandblasting to "White metal". During the process corroded pits in metal plates were revealed. Individual pits sizes varied from pin head size to 1/4" diameter at most. Few small patches had maximum size of 5"x2". Density of pits varied from few pits in three top plate courses to densely pitted areas in second plate course from bottom. The depth of the pits was measured 1/16" at most. All pits deeper than 1/32" were filled by welding and grounded to thickness matching the tank wall thickness. Approximately 65 pits were corrected. Mr. J. R. Williams of Professional Service Industries, Inc. supervised the welding procedures. The new coating will be Vinyl Ester Flakeline as manufactured by Ceilcote Co. The material is suitable for its intended use. The complete internal inspection will be conducted after coating of the entire inner surface is finished and coating material is cured.

Mix Tank #4 - Item No. 13 and Sludge Concentrator Tank #3 - Item No. 24 will be prepared for visual inspection of the interior within the next two months. At that time, the tanks will be empty and clean. External inspection of Tank #2, #3 and #4 was conducted on December 20, 1990. For assessment se certified inspection report dated January 15, 1991.

H-S-T

Mr. Gregory Jones
CLEAN HARBORS, INC.
HST Project No. 1722
Page 2

Concrete Sludge Sump - Item No. 22 was partially inspected on January 28, 1991. For assessment, see certified inspection report dated January 30, 1991.

I also witnessed demonstration of piping pressure testing. Actual pressure testing for underground and aboveground piping was done between May 17 through May 25, 1991. All lines (pipe number 1 through 19) were tested at 25 psig which is 50% over the highest operating pressure of 18 psig for liquid of specific gravity 1.0. The testing pressure was held over a period of 2 hours. According to Mr. Gregory Jones, there were no pressure losses or visible leaks. The piping tests were performed according to sketches and instructions as prepared by Hoyer-Schlesinger-Turner, Inc. on December 8, 1987 as a part of "Assessment of existing Tank System" document.

Sincerely,

HOYER-SCHLESINGER-TURNER, INC.
Engineers - Constructors

Marie Vanagas

Marie Vanagas, P.E.
Illinois License No. 62-40401
Expiration Date 11/30/92

MARIE VANAGAS
62-40801
REGISTERED
PROFESSIONAL
ENGINEER
OF
ILLINOIS

MV/ar

CC: James R. Laubsted, CHI
Lee Schlesinger, HST

HOYER-SCHLESINGER-TURNER inc.
ENGINEERS - CONSTRUCTORS
300 west adams street chicago illinois 60606 telephone 263-0556 area code 312

May 30, 1991

Mr. Gregory Jones
Operating Manager
CLEAN HARBORS, INC.
11800 S. Stony Island Ave.
Chicago, Illinois 60617

Subject: Phase V
HST Project No. 1722
Inspection Report for Process Tank:
Item No. 63 - Waste Storage Tank

Dear Mr. Jones:

On May 29, 1991 I visually inspected tank No. 63 - Waste Storage Tank located in process building #1. The tank is closed on top, it has 3" Ø vent line and is operating at atmospheric pressure and ambient temperature. The tank was constructed in August, 1986 from fiberglass reinforced plastic lined with Derakane 411 as a corrosion barrier.

Visual inspection of the interior was done through the manhole located in the top head of the tank.

The tank was near empty at the time of the inspection. There was approximately 2" of water on the bottom, covered with light dust.

The cleaning was done with high pressure cold water without detergent. The walls were clean, there was no sign of sludge accumulation.

Therefore, I herby certify that after visual inspection, the tank is structurally sound, properly supported and set, no evidence of leaks, cracks, scratches or bulging were observed and the tank was clean. Based on my inspection, the tank can be put back into service.

Very truly yours,

HOYER-SCHLESINGER-TURNER, INC.
Engineers - Constructors

Marie Vanagas, P.E.
Illinois No. 62-40801
Project Engineer

MARIE VANAGAS
62-40801
REGISTERED
PROFESSIONAL
ENGINEER
OF
ILLINOIS

Footnotes:

1. This inspection report dated May 30, 1991 is Phase V of on-going inspect-certification program for the entire "Clean Harbors, Inc." plant in Chicago.
2. The next inspection will take place as soon as the plant will have the tanks available to HST, Inc.
3. For the purpose of continuity, HST Project No. 1722 will be used for the entire project.

MV/ar
Encl.

CC: James R. Laubsted, CHI
Lee Schlesinger, HST

CLEAN HARBORS, INC. - CHICAGO

PROCESS/FLUID HANDLING TANKS

OCATION: PROCESS BUILDING #2

ANK .D. O.	TANK USEAGE	TYPE OF TANK	TANK SIZE (DIA. FT.) W X L X H	pH	OPERATING TANK CAPACITY GALLONS	TANK FOUNDATION	TANK DESIGN CODE	REMARKS
63	Waste Storage Ammonium Sulfate	Flat bottom	8'Ø X 14'	1.5 to 12	4800	Conc. Maintenance Pad	ASTM 3299	FRP

HOYER-SCHLESINGER-TURNER inc.
ENGINEERS - CONSTRUCTORS
100 west adams street chicago illinois 60606 telephone 263 0556 area code 312

February 15, 1991

Mr. Gregory Jones
Operations Manager
CLEAN HARBORS, INC.
11800 S. Stony Island Avenue
Chicago, Illinois 60617

Re: HST Project No. 1722

Dear Mr. Jones:

I, being a registered professional engineer in the State of Illinois, hereby certify that I have conducted an assessment of the storage tanks (See Attached Table I) and ancillary equipment in use at Clean Harbors of Chicago, Inc. and that, based on a review of:

1. design standards to which the tanks and ancillary equipment were constructed;
2. the hazardous characteristics of the wastes that have been and will be handled;
3. the results of tank integrity inspections conducted on (See attached reports);

the tank and ancillary equipment are adequately designed and have sufficient strength and compatibility with the waste(s) to be stored or treated, to ensure that they will not collapse, rupture or fail.

I certify under penatly of law that this document and all attachments were prepared under my direct supervision and in accordance with a system designed to assure that qualified personnel properly gather and evaluate the information submitted. Based on my inquiry of the person or persons who manage the system, or those persons directly responsible for gathering the information, the information submitted is, to the best of my knowledge and belief, true, accurate, and complete. I am aware that there are significant penalties for submitting false information, including the possibility of fines and imprisonment for knowing violations.

Very truly yours,

HOYER-SCHLESINGER-TURNER, INC.
Engineers - Constructors

Marie Vanagas

Marie Vanagas, PE
Licensed Professional Engineer
Illinois No. 62-40801
My License Expires on 11/30/92

MARIE VANAGAS
62-40801
REGISTERED
PROFESSIONAL
ENGINEER
OF
ILLINOIS

TA
EXISTING TAN

ITEM NO. Note (1)	QUANTITY	DESCRIPTION	DESIGN CAPACITY GALS.	TANK SHAPE	TANK DIA. OR L x W	SIZ
1	1	CONCRETE RECEIVING TANK	7000	SLOPED BOT. RECTANGULAR	22x10	3
3	1	3 COMPARTMENT REACTOR VESSEL	13000	RECTANGULAR	25.5x8	1
8	3	CONCRETE RECEIVING TANKS	7000	SLOPED BOT. RECTANGULAR	22x10	3t
10	1	PRIMARY STORAGE TANK (TK#2)	212000	VERTICAL CYLINDRICAL	30	4
13	1	MIX TANK (TK#4)	424000	VERTICAL CYLINDRICAL	60	2
17	1	CHEMICAL TREATMENT UNIT	4800	RECTANGULAR	9x8	11
19	4	GRAVITATORS (CLARIFIERS)	2450	CYLINDRICAL W/CONE BOT.	8	10
20	1	SECONDARY CLARIFIER	6450	RECTANGULAR	12x8	9
22	1	CONCRETE SLUDGE SUMP	13000	SLOPED BOT. RECTANGULAR	20x15	4t
24	1	SLUDGE CONCENTRATOR TANK(TK#3)	212000	VERTICAL CYLINDRICAL	30	-
29	1	SLUDGE CONDITIONING TANK	10400	VERTICAL CYLINDRICAL	10.5	
31	1	EFFLUENT DISCHARGE TANK (TK#1)	188500	VERTICAL CYLINDRICAL	40	
42	1	EFFLUENT COLLECTION TANK	1050	RECTANGULAR	5x4	
49	1	CLARIFIER COLLECTION TANK	1900	VERTICAL CYLINDRICAL	6	
51	1	1st SECONDARY TREATMENT TANK	318	"	3	
52	1	2nd SECONDARY TREATMENT TANK	318	"	3	
53	1	FLOCCULATOR TANK	880	"	5	
58	2	REACTOR VESSELS	6000	"	8	
59	2	PRODUCT STORAGE TANKS	6000	"	8	
63	1	WASTE STORAGE TANK	5200	VERTCAL CYLINDRICAL	8	

SICAL DATA

TANK DESIGN CODE	TANK OPERATING CAPACITY GALS.	MATERIAL OF CONSTRUCTION	INTERNAL CORROSION PROTECTION Note (2)	YEAR BUILT	TYPE OF FOUNDATION	SECONDARY CONTAINMENT
ACI	6000	REINFORCED CONCRETE	SYSTEM # 6	1980	CONCRETE	NONE
NONE	11500	C. STEEL	SYSTEM # 5	1980	CONCRETE SLAB	SEE NOTE (3)
ACI	6000	REINFORCED CONCRETE	SYSTEM # 6	1980	CONCRETE	NONE
AWWA D-100	207000	C. STEEL	SYSTEM # 4	1980	CONCRETE RING FILLED WITH OILED SAND	SEE NOTE (4)
AWWA D-100	403000	C. STEEL	SYSTEM # 4	1980	CONCRETE RING FILLED WITH OILED SAND	SEE NOTE (4)
NONE	4300	C.STEEL	SYSTEM # 4	1980	CONCRETE SLAB	SEE NOTE (3)
NONE	2300	C. STEEL	SYSTEM # 4	1980	CONCRETE SLAB	SEE NOTE (3)
NE	6100	C.STEEL	SYSTEM # 4	1980	CONCRETE SLAB	SEE NOTE (3)
ACI	11875	C.STEEL	NONE	1980	CONCRETE	NONE
AWWA D-100	200000	C.STEEL	SYSTEM # 4	1980	CONCRETE RING FILLED WITH OILED SAND	SEE NOTE (4)
NONE	9750	C.STEEL	NONE	UNKNOWN	CONCRETE SLAB	SEE NOTE (5)
AWWA D-100	180000	C.STEEL	SYSTEM # 4	1980	CONCRETE RING FILLED WITH OILED SAND	SEE NOTE (4)
NONE	900	C.STEEL	SYSTEM # 4	1987	CONCRETE SLAB	SEE NOTE (3)
NONE	1700	C.STEEL	SYSTEM # 4	1987	CONCRETE SLAB	SEE NOTE (3)
NONE	265	C.STEEL	SYSTEM # 4	1987	STEEL PLATFORM	SEE NOTE (3)
NONE	265	C.STEEL	SYSTEM # 4	1987	•	•
NONE	750	C.STEEL	SYSTEM # 4	1987	•	•
UL142	5600	C.STEEL	NONE	1984	CONCRETE SLAB	SEE NOTE (3)
UL142	5600	C.STEEL	NONE	1984	CONCRETE SLAB	SEE NOTE (3)
3299	4800	FRP	100mils. DOW - 411	1986	CONCRETE SLAB	SEE NOTE (3)

HOYER-SCHLESINGER-TURNER INC
INDUSTRIAL CONSTRUCTORS

January 8, 1991

Mr. Gregory Jones
Operating Manager
CLEAN HARBORS, INC.
11800 S. Stony Island Ave.
Chicago, IL 60617

Subject: Phase II
HST Project No. 1722
Inspection Report for Process Tanks:
Flocculator Tank #53
1st Secondary Treatment Mixing Tank #51
2nd Secondary Treatment Mixing Tank #52
Chemical Treatment Unit #17
Secondary Clarifier (Tube Settler) #20
Sludge Conditioning Tank #29
Effluent Collection Tank #42
Secondary Treatment Surge (Clarifier Collection) Tank #49

Dear Mr. Jones:

On December 17, 1990 I visually inspected tanks listed above. All tanks except Sludge Conditioning Tank #29 are located in Process Building #1. Sludge Conditioning Tank #29 is located in Process Building #2. All tanks are operating at atmospheric conditions, temperature and pressure. Tanks are open on top and they do not have vents or special venting devices, except for Sludge Conditioning Tank #29 which is closed on top and has 3" dia. vent.

All tanks are constructed from carbon steel. They are externally painted with blue Rust-Oleum industrial grade paint and internally coated with Carbomastic - coal tar epoxy, except for Sludge Conditioning Tank #29, which is externally painted with white Rust-Oleum industrial grade paint and does not have an interior coating.

All tanks were empty at the time of inspection. Internally coated tanks were washed with high pressure cold water without detergent. Sludge Conditioning Tank #29 was mechanically scraped. For tanks physical sizes, additional information and inspection remarks see attached Tables.

Inspection findings were discussed with General Manager, Mr. James R. Laubsted on December 20, 1990. All corrosion spots and/or damaged lining in all tanks indicated will be repaired at earliest convenient time. Third chamber in unit #20 will be completely re-coated.

Therefore, I hereby certify that after visual inspection, tanks are structurally sound, properly supported and set, no evidence of leaks, cracks, buldging or weld defects were observed and tanks were clean as practicability permits. Based on my inspection, all tanks can be put back into service.

Very truly yours,

HOYER-SCHLESINGER-TURNER, INC.
Engineers - Constructors

Marie Vanagas, P.E.
Illinois No. 62-40801
Project Engineer

MARIE VANAGAS
62-40801
REGISTERED
PROFESSIONAL
ENGINEER
OF
ILLINOIS

Footnotes:

1. This inspection report dated January 8, 1991 is Phase II of on-going inspect-certification program for the entire "Clean Harbors, Inc" plant in Chicago.
2. Next inspection will take place as soon as plant will have tanks available to HST, Inc.
3. For purpose of continuity, HST Project No. 1722 will be used for the entire project.

MV/ar
Encl.

CC: James R. Laubsted, CHI
Lee Schlesinger, HST

HOYER-SCHLESINGER-TURNER, INC.

CLEAN HARBORS, INC. - CHICAGO

PROCESS/FLUID HANDLING TANKS

LOCATION: PROCESS BUILDING #1

TANK I.D. NO.	TANK USEAGE	TYPE OF TANK	TANK SIZE (DIA. FT.) W X L X H FT	PH	OPERATING TANK CAPACITY GALLONS	TANK FOUNDATION	TANK DESIGN CODE	REMARKS
53	Flocculator	Flat on bottom	5'Ø X 6'	8.5 - 10.5	850	None - Steel Support	None	1
51	Mixing	Flat on bottom	3'Ø X 6'	8.5 - 10.5	300	None - Steel Support	None	2
52	Mixing	Flat on bottom	3'Ø X 6'	8.5 - 10.5	300	None - Steel Support	None	3
17	Treatment	Flat on bottom Tank divided to chambers-elevated	Approximately 8' X 9' X 10'	8 - 10	---	Conc. Maintenance Pad	None	4
20	Clarifier	Flat on bottom Tank divided to Chambers	Approximately 9' X 14' X 10'	9 - 9.5	---	Conc. Maintenance Pad	None	5
49	Clarifier	Flat on bottom	6'Ø X 9'	9 - 10	1400	Conc. Maintenance Pad	None	8
42	Effluent Collection	Flat on bottom	5' X 4' X 7'	10<	1000	Conc. Maintenance Pad	None	7

HOYER-SCHLESINGER-TURNER, INC.

CLEAN HARBORS, INC. - CHICAGO

PROCESS/FLUID HANDLING TANKS

LOCATION: PROCESS BUILDING #2

TANK I.D. NO.	TANK USEAGE	TYPE OF TANK	TANK SIZE (DIA. FT.) W X L X H FT.	PH	OPERATING TANK CAPACITY GALLONS	TANK FOUNDATION	TANK DESIGN CODE	REMARKS
29	Sludge Conditioning	Flat on bottom	10.5'Ø X 16'	9 - 12.4	10,000	Conc. Maintenance Pad	None	6

H.S.T

Mr. Gregory Jones
CLEAN HARBORS, INC.
HST Project No. 1722

REMARKS

1. Tank #53: Little sandy like residue left on bottom. Bottom pipe nozzle rusted inside and around welded connections.
Tank is in operations since Dec. 1988.

2. Tank #51: Little sandy like residue left on bottom, slight sign of corrosion (approx. 10" long) along bottom seam.
Tank is in operations since Dec. 1988.

3. Tank #52: Corrosion spot inside of tank approx. 15" x 2.5" in size.
Tank is in operations since Dec. 1988.

4. Unit #17: Top frame slightly corroded and coated with sludge. Chamber walls coated with residue-it is not possible to remove this coating with high pressure water only. Mechanical means will have to be used, but possibilities of damaging coating are to great. Recommending outside painting of bottom of tank and north wall of tank (behind screen).
Unit is in operations since 1981.

5. Unit #20: Filler (light wall PVC tubes approx. 2 ft. deep and at 45°) were not removed so it was not possible to inspect bottom of tank. Filler was showing sludge sediment on top. Inside walls of incoming chamber were heavily coated with residue, which was pealing off in pieces and flakes. Coating under looked intact. Middle chamber showing slight sign of corrosion around wier. Inside walls were coated with residual, again, when pealed off, coating was intact. Inside walls of third chamber were showing signs of corrosion. Coating was damaged and peeling off.
Unit is in operations since 1981.

6. Tank #29: There was slight sign of corrosion on inside wall. Since this tank is not coated on inside, slight corrosion is a normal occurrence. Top plate had foam like residue on inner side.
Tank is in operation since 1986.

7. Tank #42: Part of coating missing.
Tank is in operations since Dec. 1988.

8. Tank #49: Tank is in operations since Dec. 1988.

HOYER • SCHLESINGER • TURNER, INC.
ENGINEERS — CONSTRUCTORS
300 WEST ADAMS STREET • CHICAGO, ILLINOIS 60606
AREA CODE 312/ 263-0556

OFFICE MEMORANDUM

FROM: JOHN F. RUDNICKI DATE: JUNE 28 1990

TO: LEE SCHLESINGER

COPY TO: PROJECT FILE H-S-T # 1722

H-S-T PROJECT NO. 1722 CO NAME: CLEAN HARBORS, INC.

SUBJECT: VERIFICATION OF TELEPHONE CONVERSATION BETWEEN MR. GREGORY JONES OPER. MGR (for CLEAN HARBORS, INC) and JOHN F. RUDNICKI, TODAY (for H-S-T, INC)

IN TODAY TELEPHONE CONVERSATION WITH MR. G. JONES AND THE WRITER IN REGARD TO H-S-T, INC INSPECTION ED JUNE 21 1990 AND CONTINUITY OF PROJECT FOLLOWING, HAVE BEEN DISCUSSED and DETERMINED:

1. USED OUTSIDE TANK #1 & TANK #2 (6000 GALS) WILL BE USED FOR OIL &/OR OIL MIXED WITH WATER NOT FUEL OIL.
2. VERY SOON, SAY IN THE WEEK OF JULY 16 OR JULY 23 I WILL BE CALLED AGAIN FOR INSPECTION FOR (2) TWO ADDITION TANK.
   INSPECTION REPORT IN REGARD TO ALL ABOVE OUTSIDE TANKS WILL BE KEEP SEPARATELY FROM INSPECTION REPORT ON ALL PRODUCTION TANKS;
3. INSPECTION OF REMAINDER OF PROD. TANKS WILL BE DONE SOON, (AS SOON AS AVAILABLE)

Sincerely
John F. Rudnicki

C.C. MR. G. JONES
OPERATION MANAGER

J. F. RUDNICKI P. E.
PROFESSIONAL ENGINEER

HOYER - SCHLESINGER - TURNER, INC.
ENGINEERS — CONSTRUCTORS
300 WEST ADAMS STREET - CHICAGO, ILLINOIS 60606
AREA CODE 312/ 263-0556

OFFICE MEMORANDUM

FROM: JOHN F. RUDNICKI DATE August 2 1990

TO: LEE SCHLESINGER

COPY TO: GREG JONES & PROJECT FILE # H-S-T 1722-1

H-S-T PROJECT NO. 1722-1 CO NAME CLEAN HARBORS, INC.

SUBJECT: VERIFICATION OF FIELD INSPECTION OF TANK # 2 and MAIN REACTOR

ON AUGUST 2 1990, UNDERSINGED AS PROFESSIONAL ENGINEER IN THE STATE OF ILLINOIS, I ENTERED AND VISUALLY INSPECTED TANK # 2 (I.D. 8B RECEIVING # 2) AND MAIN REACTOR;

THERFORE, I HEREBY CERTIFY THAT ON AUGUST 2 199 RECEIVING TANK No 2 and REACTOR WERE INSPECTED AND THAT:

(1) THE TANK AND REACTOR ARE STRUCTURALLY SOUND, NO EVIDENCE OF CRACKS OR LEAKS WERE OBSERVED.

(2) THE COATING SYSTEM WAS CLEAN AND REPAIRED WHER REQUIRED.

(3) THE TANK AND REACTOR HAVE BEEN CLEANED WITH A HIGH-PRESSURE WASHER AND THERE WERE NO WASTE REMAINING.

Sincerely

Janusz F. Rudnicki

Janusz F. Rudnicki
JANUSZ F. RUDNICKI
LICENSED PROFESSIONAL ENGINEER
ILLINOIS NO. 062-041068
MY LICENSE EXPIRES

Footnotes: 1. THIS INSPECTION IS PART 1 of PHASE II OF ON GOING INSPECTION - CERTIFICATION PROGRAM

HOYER - SCHLESINGER - TURNER, INC.
ENGINEERS — CONSTRUCTORS
300 WEST ADAMS STREET - CHICAGO, ILLINOIS 60606
AREA CODE 312/ 263-0556

OFFICE MEMORANDUM

FROM: JOHN F. RUDNICKI DATE Aug. 2 1990

TO: LEE SCHLESINGER

COPY TO: GREG JONES & PROJECT FILE # H-S-T. 1722-1

PROJECT NO. 1722-1 NAME U.S. CLEAN HARBOR, INC.

SUBJECT: TWO (2) PHOTOGRAPH OF CLEAN TANK #2 and MAIN REACTOR

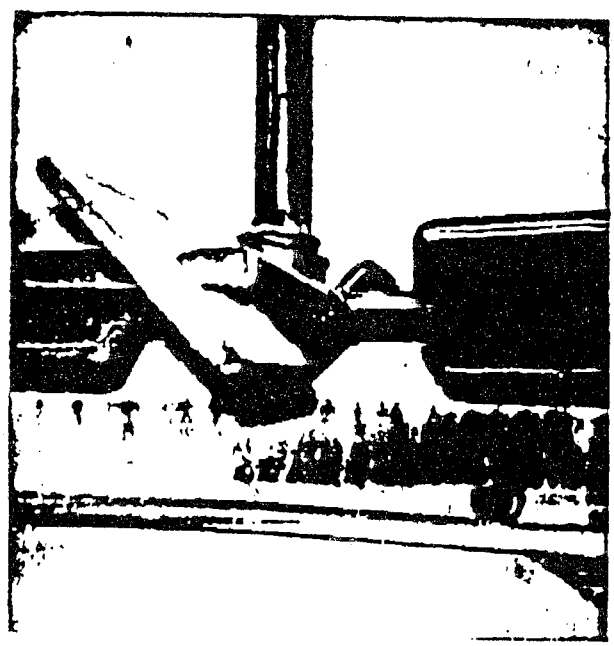

REACTOR
(INSIDE VIEW)

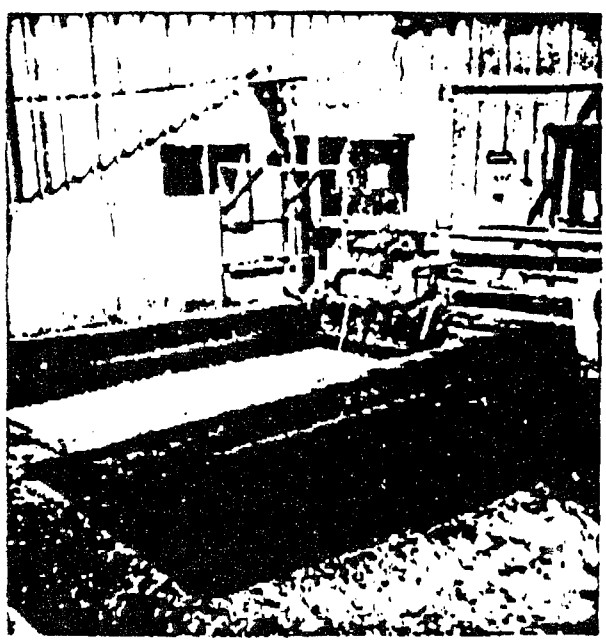

CLEAN HARBORS, INC.
TANK #2

P.S. TOTAL INSPECTION REPORT WILL BE ISSUED NEXT (FINAL) INSPECTION

James F. Rudnicki
JAMES F. RUDNICKI
LICENSED PROFESSIONAL ENGINEER

HOYER - SCHLESINGER - TURNER, INC.
ENGINEERS — CONSTRUCTORS
300 WEST ADAMS STREET - CHICAGO, ILLINOIS 60606
AREA CODE 312/263-0556

OFFICE MEMORANDUM

FROM: John F. Rudnicki DATE Oct. 25 1990

TO: Mr. Gregory JONES

COPY TO: File: 1722-1
Lee Schlesinger

PROJECT NO. 1722-1 NAME {TANKAGE ASSESSMENT
SUBJECT: Chicago Plant {Clean Harbors

On October 24 1990 I inspected
(WEDNESDAY)
and certified following tanks:

CERTIFIED

1) EFFLUENT HOLDING TANK
200,000 GAL. (CAPACITY)
Mfr: PRAIRIE, PLAINFIELD, INC.
YR: 1981 HEIGHT: 20'-0"
CODE: AWWA D-100

(OUTDOOR)

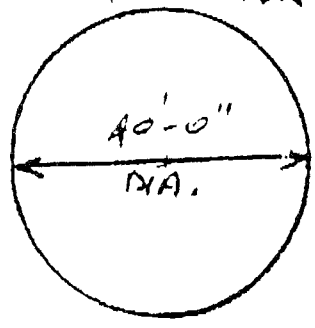

2) SEONDARY TREATMENT SYSTEM
so called: TREATMENT TANK
(INDOOR)

Also: EFFUENT COLLECTION TANK (TANK #20) ~ 3000 GAL
IS SCHECH.: LATER

{LOCATION BELOW TANK #1 etc....

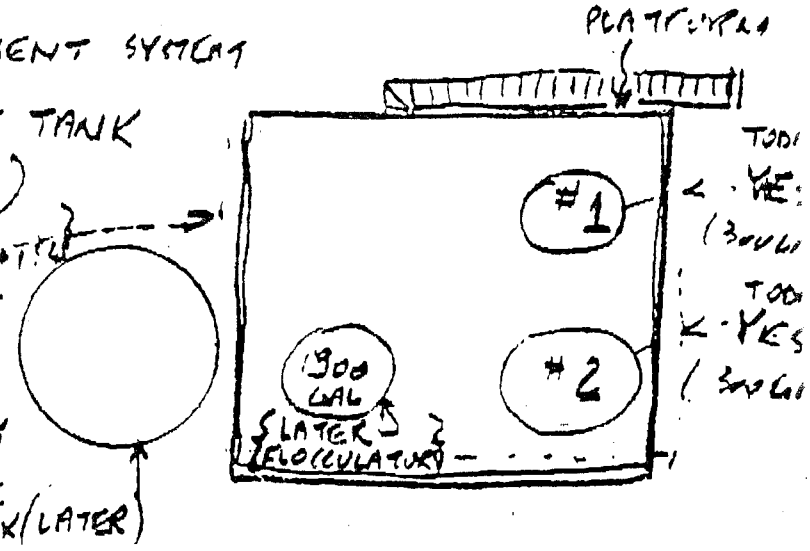

HOYER-SCHLESINGER-TURNER inc
ENGINEERS • CONSTRUCTORS
300 west adams street chicago illinois 60606 telephone 263-0556 area code 312

June 21, 1990

Mr. Gregory Jones
Operation Manager
CLEAN HARBORS, INC.
11800 S. Stony Island Ave.
Chicago, Illinois 60617

Subject: Inspection Report As Per Following Group:

Group I	Group II	Group III
Receiving Tank #1	Gravitator Tank #1	Fuel Oil #1
Receiving Tank #3	Gravitator Tank #2	Fuel Oil #2
Receiving Tank #4	Gravitator Tank #3	*For cross-ref. see Engineer's Tabulation #3
*For cross-ref. see Engineer's Tabulation #1	Gravitator Tank #4	
	*For cross-ref. see Engineer's Tabulation #2	

Chicago Plant
HST Project No. 1722

Dear Mr. Jones:

On June 18, 1990, undersigned as Professional Engineer in the State of Illinois, I entered and visually inspected each tank and found no evidence of cracks, leaks or corrosion. The tanks were also examined for evidence of sludge accumulation or remaining wastes.

Therefore, I hereby certify that on June 18, 1990, Receiving Tank No. 1, Receiving Tank No. 3, Receiving Tank No. 4 (see Engineer's Tabulation #1), Gravitator Tank No. 1, Gravitator Tank No. 2, Gravitator No. 3, Gravitator No. 4 (see Engineer's Tabulation #2) were inspected and that:

(1) The tanks are structually sound, no evidence of cracks or leaks were observed.

(2) The coating system was clean and repaired where required.

(3) The tanks have been cleaned with a high-pressure washer and there were no wastes remaining in the tanks.

H.S.T

Based upon my personal inspection, all tanks, Group I and Group II can be put back into service.

On June 19, 1990, I also inspected Fuel Oil Tank #1 and Fuel Oil Tank #2 (Group III - see Engineer's Tabulation #3). I entered and visually inspected and found no evidence of cracks, leaks or corrosion. These two (2) tanks are brand-new and after this examination, I hereby certify that these tanks are suitable for their intended use.

Sincerely yours,

HOYER-SCHLESINGER-TURNER, INC.

Janusz F. Rudnicki

Janusz F. Rudnicki, P.E.
Illinois 062-041068

JANUSZ F. RUDNICKI
062-041068
REGISTERED PROFESSIONAL ENGINEER OF ILLINOIS

Footnotes:

1. This inspection report dated June 21, 1990 is Phase I of on going inspection - certification program for entire "Clean Harbors, Inc." plant.

2. Next inspection will take place as soon as plant will make them available to HST, Inc.

3. For purpose of continuity, easy project management and consistency HST Project #1722 will be used for entire program.

JFR/ar

CC: Lee Schlesinger, P.E.
President

LEE SCHLESINGER
18105
LICENSED PROFESSIONAL ENGINEER OF ILLINOIS

HOYER-SCHLESINGER-TURNER, INC.

ENGINEER'S TABULATION #1: CLEAN HARBORS, INC. - CHICAGO

PROCESS/FLUID HANDLING TANKS

LOCATION: OUTSIDE OF THE PROCESS BUILDING #1

TANK I.D. NO.	TANK USEAGE	TYPE OF TANK	TANK SIZE (DIA. FT.) W X L. FT	HT. FT	OPERATING TANK CAPACITY GALLONS	TANK OPERATING TEMP. °F	TANK CONDITION PRESSURE	TANK VENTING SIZE	TANK DESIGN CODE	TANK FOUNDATION	REMARKS
8A	RECEIVING #1	RECTANG. W/SLOPED PIT	10' X 22'-4"	3 X 6	5,500	AMBIENT	ATM.	ATM.	NONE	CONCRETE	*
8B	RECEIVING #2		NOTE: THIS TANK HAS NOT BEEN INSPECTED BECAUSE CLEAN HARBORS, INC HAS TO USE IT FOR CURRENT SERVICES/PRODUCTIONS.								
1A	RECEIVING #3	RECTANG. W/SLOPED PIT	10' X 22'-4"	3 X 6	5,500	AMBIENT	ATM.	ATM.	NONE	CONCRETE	*
1B	RECEIVING #4	RECTANG. W/SLOPED PIT	10' X 22'-4"	3 X 6	5,500	AMBIENT	ATM.	ATM.	NONE	CONCRETE	*

*EXISTING TANK IN OPERATION SINCE DECEMBER 8, 1987

HST PROJECT NO. 1722

JUNE 21, 1990

HOYER-SCHLESINGER-TURNER, INC.

ENGINEER'S TABULATION #2: CLEAN HARBORS, INC. - CHICAGO

PROCESS/FLUID HANDLING TANKS

LOCATION: OUTSIDE OF THE PROCESS BUILDING #1

TANK I.D. NO.	TANK USEAGE	TYPE OF TANK	TANK SIZE DIA. FT. (W X L. FT)	HT. FT	OPERATING TANK CAPACITY GALLONS	TANK OPERATING TEMP. °F	CONDITION PRESSURE	TANK VENTING SIZE	TANK DESIGN CODE	TANK FOUNDATION	REMARKS
19A	GRAVITATOR #1	CYLINDRICAL W/CONE AT BOTTOM	8	12	3,000	AMBIENT	ATM.	ATM.	NONE	CONCRETE	*
19B	GRAVITATOR #2	CYLINDRICAL W/CONE AT BOTTOM	8	12	3,000	AMBIENT	ATM.	ATM.	NONE	CONCRETE	*
19C	GRAVITATOR #3	CYLINDRICAL W/CONE AT BOTTOM	8	12	3,000	AMBIENT	ATM.	ATM.	NONE	CONCRETE	*
19D	GRAVITATOR #4	CYLINDRCIAL W/CONE AT BOTTOM	8	12	3,000	AMBIENT	ATM.	ATM.	NONE	CONCRETE	*

*EXISTING TANK IN OPERATION SINCE DECEMBER 8, 1987

HST PROJECT NO. 1722

JUNE 21, 1990

HOYER-SCHLESINGER-TURNER, INC.

ENGINEER'S TABULATION #3: CLEAN HARBORS, INC. - CHICAGO

PROCESS/FLUID HANDLING TANKS

LOCATION: TWO (2) OIL FUEL TANK ARE LAYING DOWN WAITING FOR INSTALLATION AND PLACEMENT AND FOUNDATION; THESE TWO (2) TANKS ARE NOT READY FOR PROCESS & PRODUCTION (NO PIPING INTERCONNECTION AT ALL)

TANK I.D/MFR.	TANK USEAGE	TYPE OF TANK	TANK SIZE (DIA.FT.) W X H	HT. FT.	OPERATING TANK CAPACITY GALLONS	TANK OPERATING CONDITIONS TEMP. °F	PRESSURE	TANK VENTING	TANK FOUNDATION	REMARKS
TANK NO. 1										
MOHAWK METAL PROD. CO., FRANKFORT, NY U.L. APPROVED	FUEL OIL	CYLINDRICAL	8	16	6,000	ABMIENT	ATM.	ATM.	CONCRETE	*
TANK NO. 2										
MOHAWK METAL PROD. CO. FRANKFORT, NY U.L. APPROVED	FUEL OIL	CYLINDRICAL	8	16	6,000	AMBIENT	ATM.	ATM.	CONCRETE	

*NEW TANK TO BE INSTALLED AND PLACED FOR OPERATION.
OUTSIDE PAINTED COLOR: BROWN
MFT OF CONSTRUCTION: C.S.

HST PROJECT NO. 1722

JUNE 21 1990

APPENDIX D-25

PROFESSIONAL ENGINEER ASSESSMENT AND CERTIFICATION OF THE DESIGN OF THE APPROVED/NOT YET CONTRACTED LISTED WASTE TREATMENT SYSTEM, THE LISTED WASTE BULK STORAGE TANKS, AND RCRA-EXEMPT TANKS

HOYER-SCHLESINGER-TURNER inc.
ENGINEERS – CONSTRUCTORS
300 west adams street chicago illinois 60606 telephone 263-0556 area code 312

June 3, 1991

Mr. Gregory Jones
Operations Manager
CLEAN HARBORS, INC.
11800 S. Stony Island Ave.
Chicago, Illinois 60617

Subject: Assessment of New Tank
Systems Integrity
HST Project No. 1785-1

Dear Mr. Jones:

I, being a registered professional engineer in the State of Illinois, hereby certify that I have conducted an assessment of design for new Tanks as they are listed in Table D-5 of Volume I, Part B License Application:

1) Tanks shall be designed according to Design Codes listed in Table D-5. Exceptions in design to UL 142 Code will be reviewed by UL authorities for approval prior to tank construction. Ancillary equipment will be constructed and installed according to ANSI/ASME B31.3-1987, Chemical Plant and Refinery Piping.

2) Interior coatings for individual tanks are listed in Table D-5. Technical information is included in Appendix D-18. Waste pH values are listed in Table D-6.

3) All tanks listes in Table D-5 are to be installed above ground on concrete foundations. No tank component will be in contact with soil or water.

4) All tanks listed in Table D-5 are to be installed above ground on concrete foundations. Tanks will not be subjected to loadings caused by vehicular traffic.

5) Design of Tank foundations are listed in Appendix D-47. Anchors to prevent flotation are not applicable. All tanks are installed above ground. Tanks legs or bottoms are to be bolted to the concrete foundation.

6) For effect of frost heave on foundations, see note No. 10, Dwg. 4216.

H-S-T

I certify under penalty of law that this document and all attachments were prepared under my direct supervision and in accordance with systems designed to assure that qualified personnel properly gather and evaluate the information submitted. Based on my inquiry of the person or persons directly responsible for gathering the information, the information submitted is, to the best of my knowledge and belief, true, accurate and complete. I am aware that there are significant penalties for submitting false information, including the possibility of fines and imprisonment for knowing violations.

Very truly yours,

HOYER-SCHLESINGER-TURNER, INC.
Engineers - Constructors

Marie Vanagas

Marie Vanagas, PE
Licensed Professional Engineer
Illinois No. 62-40801
My License Expires on 11/30/92

MARIE VANAGAS
62-40801
REGISTERED
PROFESSIONAL
ENGINEER
OF
ILLINOIS

MV/ar

CC: James R. Laubsted, CHI
Lee Schlesinger, HST

APPENDIX D-26

PROFESSIONAL ENGINEER (PE) CERTIFICATION OF ASSESSMENT OF THE INTEGRITY OF THE PROPOSED/MODIFIED TANK CONTAINMENT SYSTEM

HOYER-SCHLESINGER-TURNER inc.
ENGINEERS - CONSTRUCTORS
100 west adams street chicago illinois 60606 telephone 793-0556 area code 312

July 21, 1994

Permit Section, RCRA Unit
Division of Land Pollution Control
Illinois Environmental Protection Agency
PO Box 19276
Springfield, Illinois 62794-9276

Re: Clean Harbors of Chicago, Inc.
11800 South Stony Island Avenue
Chicago, Illinois 60617
Revised Part-B Permit Application

Dear Sir or Madam:

Please refer to: 0316000051--Cook County
Clean Harbors of Chicago
ILD000608471 - RCRA Permit Log No. 16

I hereby certify that I, the undersigned am a licensed Structural Engineer, licensed to practice in the State of Illinois. I certify under penalty of law that the Modified Flammable Storage Tank Farm was designed under my direct supervision and the design incorporates good engineering practice.

The structural design is suitable for intended use. Existing walls, piers, foundations, floors and containment slabs are designed for intended load and will maintain structural integrity without failure. Newly added dike walls are designed for intended load and will maintain structural integrity without failure.

New dike walls are cast-in-place walls supported by the existing slab with additional 3.5" reinforced slab and the reinforced concrete beams located on the top of the walls. The additional 3.5" slab and the 10" thick interior dike walls with the beams on top can be poured monolitically. For optional joint between the walls and the slab, the walls are sealed with renewable caulk type sealants over closed cell polyethylene backer rod. The joints are up to 6" above the floor, therefore, any damage to the joint would be visible.

Concrete is specified on CHCI dwg. no. 4216, dwg. 5404-S-04.

After moist curing, floor and dike walls of containment areas will be coated with a monolithic coating material that is chemically compatible with most of the stored waste materials. After careful consideration of all stored chemicals and discussion with coating manufacturer representatives, Protecto-Crete 900 manufactured by Dudick, Inc. was selected as most suitable. Technical specifications are listed in Appendix D-10.

Respectfully submitted,

HOYER-SCHLESINGER-TURNER, INC.

Peter J. Bernes

PETER J. BERNES
LICENSED STRUCTURAL ENGINEER
ILLINOIS NO. 3659
MY LICENSE EXPIRES ON 11-30-94

STATE OF ILLINOIS
PETER J.
BERNES
3659
LICENSED STRUCTURAL ENGINEER

APPENDIX D-27

PROFESSIONAL ENGINEER (PE) ASSESSMENT AND CERTIFICATION OF THE DESIGN OF PEGASUS SYSTEM

HOYER-SCHLESINGER-TURNER inc
ENGINEERS - CONSTRUCTORS

March 12, 1993

Permit Section, RCRA Unit
Division of Land Pollution Control
Illinois Environmental Protection Agency
P.O. Box 19276
Springfield, Illinois 62794-9276

Re: Clean Harbors of Chicago, Inc
11800 South Stony Island Avenue
Chicago, Illinois 60617
Revised Part-B Permit Application

Dear Sir or Madam:

Please refer to: 0316000051--Cook County
Clean Harbors of Chicago
ILD000608471
RCRA Permit Log No. 16

I hereby certify that I, the undersigned am a Professional Engineer, licensed to practice in the State of Illinois.

I certify under penalty of law that I reviewed the design of PEGASUS Drum Processing/Fuel Blending System. The System is Fully Enclosed/Nitrogen Blanketed with back-up Carbon Dioxide Emergency System and electrically grounded and bonded. Presentation of the System is in form of Certification letter, drawings and Operational Manual (see appendix D-49A through D-57).

The structural supports of the entire system are adequately designed. The Dispersion Tank and Overflow Tank has sufficient structural strength that will not collapse, rupture or otherwise fail under normal operating conditions. Material of construction is compatible with stored wastes.

The following standards will be met:

- NFPA 68, Venting of Deflagrations
- NFPA 69, Explosion Prevention Systems
- NFPA 12, Carbon Dioxide Extinguishing Systems
- NFPA 30, Flammable and Combustible Liquids Code
- API Standard 2000, Venting Atmospheric and Low-Pressure Storage Tanks
- API Standard 650, Welded Steel Tanks for Oil Storage
- API SPEC 12F, Shop Welded Tanks for Storage of Production Liquids
- UL 142, Steel Aboveground Tanks for Flammable and Combustible Liquids

See enclosed calculations for containment volume and strength of concrete slab upon which the Pegasus system rests. Containment slab is designed as a mat foundation. See also Certification letter dated December 11, 1992 in Appendix D-59.

I certify under penalty of law that the information provided is to the best of my knowledge and belief true, accurate and complete.

Respectfully submitted,

HOYER-SCHLESINGER-TURNER, INC
Consulting Engineers

Marie Vanagas, PE
Licensed Professional Engineer
Illinois No. 062-040801
My license expires on 11/30/94

PEGASUS CONSULTANTS
345 THIRD STREET - SUITE 525
NIAGARA FALLS, N.Y. 14303
(716) 285-3856
FAX (716) 285-7579

February 12, 1992

CLEAN HARBORS, INC.
609 Pleasant Street
Weymouth, MA 02188

Dispersion Tank System for
Clean Harbors, Inc. Chicago, Illinois

The structural supports, seams, connections and pressure controls are adequately designed and the tank has sufficient structural strength and is compatible with the waste (as described by Clean Harbors, Inc.) and the tank will not collapse, rupture or fail if operated, inspected and maintained according to the operating instructions.

The tank system has been designed to handle a wide variety of hazardous and non-hazardous organic materials, including chlorinated compounds, solvents, alcohols, paint sludges, ink sludges, etc. These materials may be classified as flammable, toxic or corrosive, whose physical properties will be in the ranges as follows:

* Viscosity 1 to 7,000 centipoise
* Specific Gravity .9 to 1.50
* pH 4 to 10, average 6-8
* B.Th.U contents 0-18,000 B.Th.U's/lb.

The tank system is operated under nitrogen blanket and is fitted with level and temperature sensors, controls and alarms, pressure and vacuum relief valves, emergency vent and a back-up carbon dioxide system. The system will be electrically grounded and bonded. The side wall, head dish and bottom dish all have more than sufficient thickness and the seam will be welded and inspected to comply with applicable standards.

The following standards will be met.

- NFPA 68, Explosion Venting 1978
- NFPA 69, Explosion Prevention Systems 1978
- NFPA 12, Carbon Dioxide Extinguishing Systems 1989
- NFPA 30, Flammable and Combustible Liquids Code 1984

The standards continued:

- API Standard 2000, Venting Atmospheric and Low-Pressure Storage Tanks
- API Standard 650, Welded Steel Tanks for Oil Storage
- API SPEC 12F, Shop Welded tanks for Storage of Production Liquids
- UL 142 Fifth Edition, Standard for Steel Aboveground Tanks for Flammable and Combustible Liquids
- API Rec. Practice 2003, Protection Against Ignitions Arising Out of Static, Lighting and Stray Currents
- CAN4-S630-M84, Standard for Shop Fabricated Steel Aboveground Vertical Tanks for Flammable and Combustible Liquids
- UL 142, Steel Aboveground Tanks for Flammable and Combustible Liquids

I certify under penalty of law that this document and all attachments were prepared under my direction or supervision in accordance with a system designed to assure that qualified personnel properly gather and evaluate the information submitted. Based on my inquiry of the person or persons who manage the system, information, the information is, to the best of my knowledge and belief, true, accurate and complete. I am aware that there are significant penalties for submitting false information, including the possibility of fine and imprisonment.

John I Rolfe

John I. Rolfe, P.E.
President
Pegasus Consultants

JIR/sh
\92130

STATE OF NEW YORK
JOHN I. ROLFE
LICENSE NO. 62183-1
LICENSED PROFESSIONAL ENGINEER

HOYER-SCHLESINGER-TURNER inc.
ENGINEERS - CONSTRUCTORS
300 west adams street chicago illinois 60606 telephone 263-0556 area code 312

December 21, 1992

Permit Section, RCRA Unit
Division of Land Pollution Control
Illinois Environmental Protection Agency
P.O. Box 19276
Springfield, Illinois 62794-9276

Re: Clean Harbors of Chicago, Inc.
11800 South Stony Island Avenue
Chicago, Illinois 60617
Revised Part-B Permit Application

Dear Sir or Madam:

Please refer to: 0316000051--Cook County
Clean Harbors of Chicago
ILD000608471
RCRA Permit Log No. 16

I hereby certify that I, the undersigned am a Professional Engineer, licensed to practice in the State of Illinois.

I certify under penalty of law that I reviewed the design of PEGASUS Fully Enclosed/Nitrogen Blanketed Drum Processing/Fuel Blending System.The system is presented in form of Certification letter, drawings and Operations Manual (see appendix D-49A through D-57).
See enclosed calculations for containment volume and strength of concrete slab upon which the Pegasus system rests. Containment slab is designed as mat foundation. See also Certification letter appendix D-59.

I certify under penalty of law that the information provided is to the best of my knowledge and belief true, accurate and complete.

Respectfully submitted,

HOYER-SCHLESINGER-TURNER, INC
Consulting Engineers

Marie Vanagas

Marie Vanagas, PE
Licensed Professional Engineer
Illinois No. 062-040801
My license expires on 11/30/94

MARIE VANAGAS
62-40801
REGISTERED
PROFESSIONAL
ENGINEER
OF
ILLINOIS

HOYER-SCHLESINGER-TURNER, INC.

SHEET 1 OF 2
PROJECT NO. 178
DATE 12-21-92
BY M.V.

PROJECT CLEAN HARBORS CHICAGO IL

SUBJECT EQUIPMENT LAYOUT - PROPOSED FUELS BLENDING OPERATION REF. DWG. 4213 sheet 2 of 3

CONTAINMENT CALCULATIONS: (as for piramid)

Area = 44' × 48' = 2,112 ft^2

Containment Depression:

slope 2" in 10' => in 40' = 8" depression, curbe = 5"H

Volume: $\underbrace{\left(\frac{1}{3} \times 2112 \times \frac{8''}{12}\right)}_{469} + \underbrace{\left(\frac{5''}{12} \times 2112\right)}_{880} = 1349\ ft^3$

SUBTRACT Maint pad for skid =>

$6' \times 22' \times \frac{13''H}{12} = 143\ ft^3$

Assume additional Replacement volumes of 25% of total

$(1349 - 143) = 1206 \times 0.75 = 905\ ft^3 = 6{,}765$ gal

DISPERSION TANK LIQUID VOLUME (largest vessel)

6'φ & 6' STRAIGHT at 211.5 gal/ft = 1269 gal

Dish - - - - - 211 gal

1480 gal

add piping => SAT 1500 g

Maximum spill can be 1500 gal.

Containment volume of 6,765 gal is 4.5 times of max. spill

FLOOR SLAB

1.- USING TABLE FOR SLAB ON GROUND FOR DISTRIBUTE CONCENTRATED OR UNIFORM LOADS INVOLVES THE ELASTIC PROPERTIES OF THE SUBSOIL AND THE SLAB ITSELF; COMPARING THICKNESS AND REINFORCEMENT, THIS 8" THICK SLAB WITH #4@12" O.C. IN CENTE OF SLAB, CAN CARRY LOAD OF 600-800 PSF.

TOTAL WEIGHT OF 6'x22' SKID = 30000#
ASSUMING STEEL BEAM OF SKID BASE IS 6' WIDE & SPREADING LOAD ON 14" WIDE STRIP

$$\frac{30000}{2 \times 22' \times 1.17'} = 583 \text{ PSF} \quad \text{OK.}$$

2.- IF WE DISTRIBUTE LOAD UNDE WHOLE AREA

$$\frac{30000}{6' \times 22'} = .227 \text{ PSF}$$

& CONSIDER SLAB IS CONTINUOUS,

$$M = \frac{.227 \times 6^2}{10} = .82^{1\text{-}K}$$

$$A_s = \frac{.82}{1.76 \times 4} = .12^{IN^2} < .20^{IN^2} \ (\#4@12)$$

3- SELECTION OF REINFORCEMENT FOR THE PURPOSE OF CONTROLING CRACKS CAUSED BY SHRINKAGE:

$F_y = 60{,}000$ PSI, $f_s = \frac{2}{3} F_y$

F (FRICTION FACTOR) = 1.5, LENGTH OF CONC. AREA L=49'
W = 100 PSF

$$A_s = \frac{F L w}{2 f_s} = \frac{1.5 \times 49 \times 100}{2 \times \frac{2}{3} \times 60000} = .092^{IN^2} < .20^{IN^2} \quad \text{OK}$$

APPENDIX D-28

STRUCTURAL DESIGN AND SECONDARY CONTAINMENT
CALCULATIONS FOR APPROVED/NOT YET CONSTRUCTED TANK UNITS

HOYER-SCHLESINGER-TURNER, INC.

SHEET 1 OF 41
PROJECT NO. 1785
DATE 12.28.90
BY I. N. SONKI

PROJECT CLEAN HARBORS PROPOSED WASTES STORAGE T.F.

SUBJECT CONTAINMENT CALCULATIONS. CHICAGO, IL

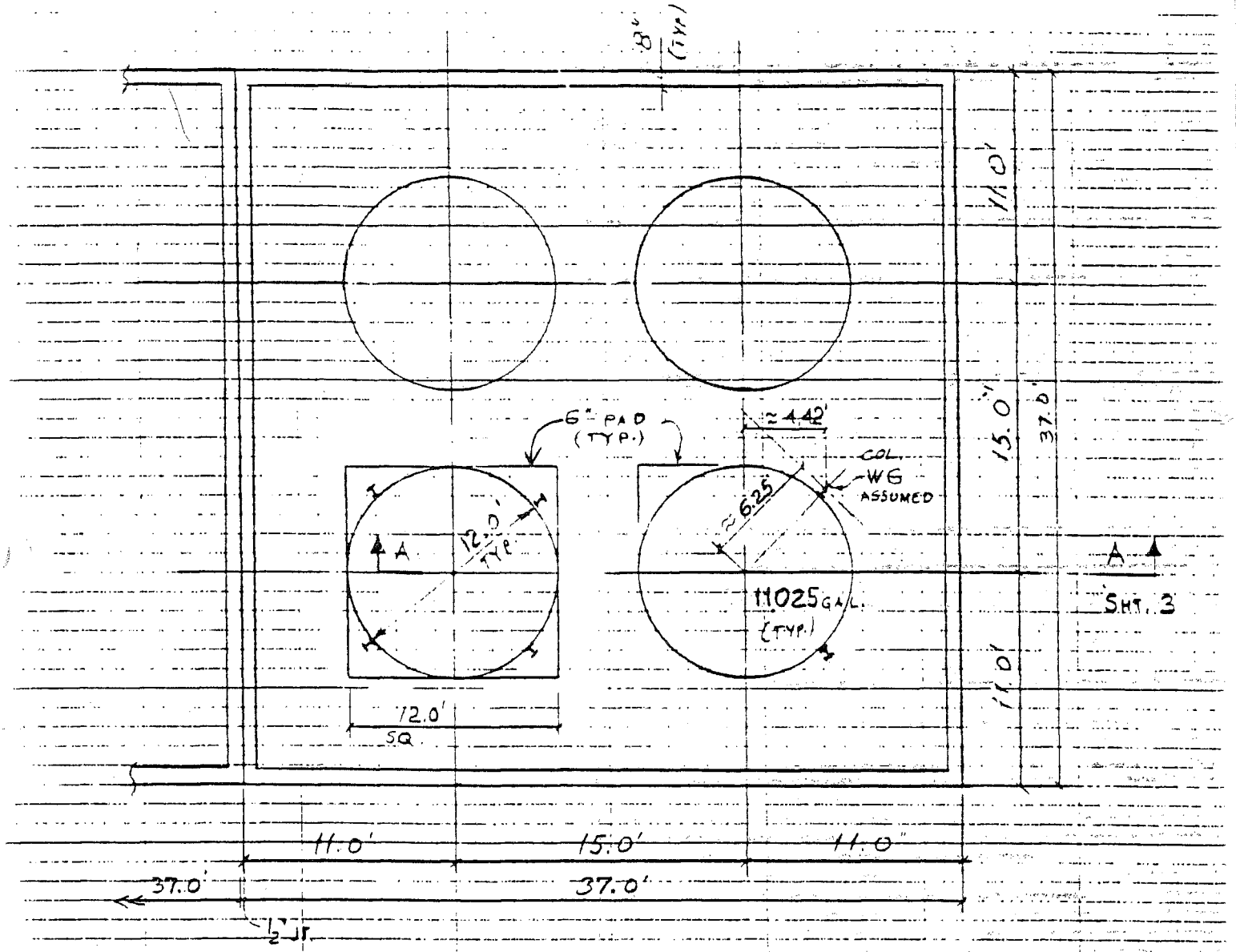

HOYER-SCHLESINGER-TURNER, INC.

SHEET 2 OF 41
PROJECT NO. 1785
DATE 01.02.91
BY JNS

PROJECT CLEAN HARBORS PROPOSED WASTE STORAGE
SUBJECT CONTAINMENT CALCULATIONS

LARGEST TANK CAPACITY IS 11,025 GAL

TRY DIKE HT. 2.0'

RE NFPA - CODE, CITY OF CHICAGO BUILDING CODE

ITEM 1. CONTAINMENT VOLUME

$$2.0' \times \left(37.0' - \frac{2 \times 8'}{12}\right)^2 = 2544.22 \text{ CF}$$

2. CONCRETE PADS DISPLACEMENT VOLUME

$$4_{\text{PADS}} \times 0.5' (12.0')^2 = 288.0 \text{ CF}$$

3. TANKS DISPLACEMENT VOLUME

$$3 \text{ TANKS } (\pi \times 6.0^2) \times (\underset{\text{DIKE HT.}}{2.0'} - \underset{\text{PAD THK.}}{0.5'}) = 508.94 \text{ CU.F}$$

4. 25 YEARS 24 HOURS RAINFALL IS 6".
TAKE 25% OF CONTAINMENT AREA ASSUMING SIDE RAIN ALONG TWO SIDES CONSERVATIVELY (REF. TO ITEM 1)

$$0.25\left(37.0 - \frac{2 \times 8'}{12}\right) 0.5' = 159.01 \text{ CU.F}$$

5. ITEMS 2, 3 & 4 TOGETHER PLUS LARGEST TANK CAPACITY ARE TO BE LESS THAN ITEM 1

$$288.0 \text{ CF} + 508.94 + 159.01 + 11{,}025/7.48 = 2{,}429.88 \text{ CU.F} <$$

$$< 2{,}544.22 \text{ CF} \quad \therefore \text{ OK}$$

USE DIKE HT 2'-0"

TANK FARM CONTAINMENT CAPACITY (1 - 4 PACK)
IS (ITEM 1) 2544.22 CF - (ITEM 2) 288.0 CU.F - (ITEM 3) 508.94 CF =
= 1747.28 CU.F (×7.5) OR 13104 GAL OR (×2) = 26208 GAL

PROJECT CLEAN HARBORS PROPOSED WASTES STORAGE

SUBJECT TANK FARM DESIGN

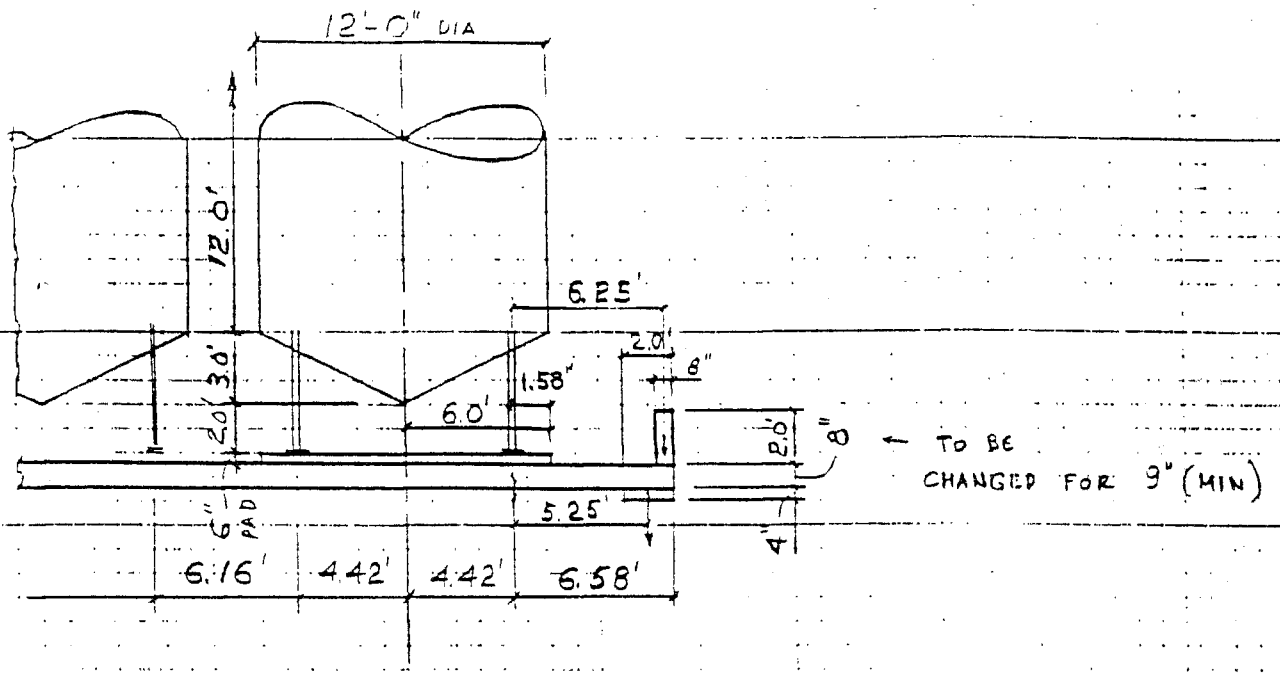

SECTION A-A

SHT. 1

TANK SELF WEIGHT = $\pi\left(\underbrace{12.0' \times 12.0'}_{\text{SHELL}} + \underbrace{\frac{12.0^2}{4}}_{\text{TOP}} - \underbrace{6.0' \times \sqrt{3.0^2+12.0^2}}_{\text{BOTT. CONE}}\right) \times$

$\times$ 12.8 PSF $\times$ 1.06 = 8634.9# = 10.84 K

5/16 PL MISC.

LEG WT $\approx$ 4 LEGS $\times$ 7.0' $\times$ 25#/LF = 700# = 0.70 K

(W6×25 ASSUMED)

LIQUID: 11,025 GAL $\times$ 8.336#/GAL $\times$ 1.30 = 119.48 K

SP. GRAV.

TOTAL TANK WT. WITH LIQUID $\approx$ 131.0 K

HOYER-SCHLESINGER-TURNER, INC.

PROJECT CLEAN HARBORS PROPOSED WASTES STORAGE

PROJECT NO. 1785

DATE 01/02/91

SUBJECT TANK FARM DESIGN

BY TNS

DESIGN ASSUMPTION USING PREVIOUS EXPERIENCE AND ENGINEERING JUDGEMENT DESIGN THE TANK FARM FOR CASE WHEN ALL TANK ARE FULL AND HORIZ. LOAD IS ACTING.

FIND SOIL PRESSURE.

TANK FARM SLAB AREA $= (37.0')^2 = 1369$ SF

DIKE WT. $= 2.0' \times \frac{8''}{12} \times 4\left(37.0' - \frac{8''}{12}\right) \times 0.15^{K}/_{CF} = 29.1^{K}$

PADS WT. $= 4 \times (12.0')^2 \times 0.5' \times 0.15 = 43.2^{K}$

SLAB WT. $= 1369$ SF $\times \frac{8''}{12} \times 0.15 = 136.9^{K}$

SLAB THICKENING WT. $= 2.0' \times \frac{4''}{12} \times 4(37.0' - 2.0')\,0.15 = 14.0^{K}$

TANKS W/LIQUID $4 \times 131.0^{K} = 524.0^{K}$

747.2^{K}

AVERAGE SOIL PRESSURE IS:

$747.2^{K} \div 1369$ SF $= 0.55$ KSI (WITHOUT WIND LOAD)

PROJECT CLEAN HARBORS, PROPOSED WASTES STORAGE TANK FARM DESIGN

SUBJECT

WIND LOAD (CITY OF CHICAGO BLDG. CODE 68-4)

WIND PRESSURE IS 20.0 PSF

ROUND TANKS FACTOR IS 0.80

1 TANK LATERAL FORCE IS: $0.8 \times 20\text{PSF} \times 12.0' \times 15.0' = 2.88^k$
DIA. HT.

SAY 3.0^k

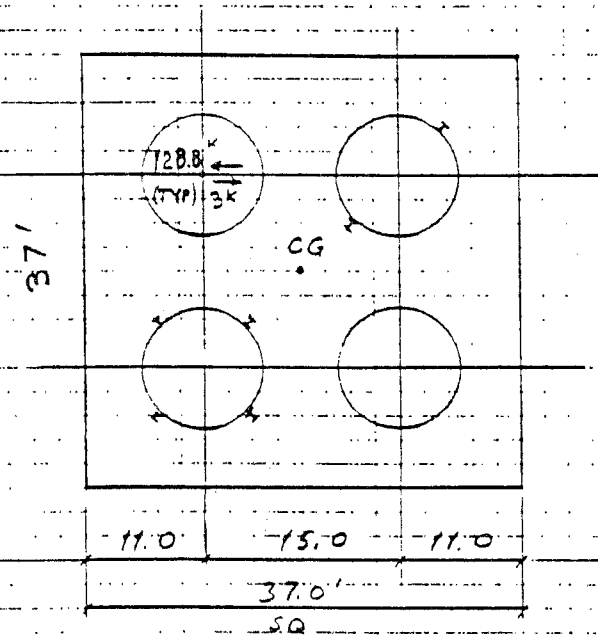

LOADS ON FOUNDATION (SLAB)

VERTICAL:
747.2^k

LATERAL:
$4 \times 3^k = 12^k$

MOMENTS:
$12.0^k \times (5.0' + \frac{12'}{2}) = 132'^k$

$e = \frac{132'^k}{747.2^k} = 0.18' \ll \frac{B}{6}$, INSIGNI

$q = \frac{Q}{A}(1 \pm 6\frac{e}{B})$ (W.C. TENG FOUND. DESIGN)

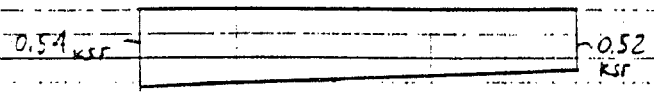

$q = \frac{747.2^k}{1369\,sf}(1 \pm 6\frac{0.18'}{37'}) = 0.56\ ksf$
(0.53 KSF)

TO DESIGN THE SLAB USE SUM OF DOWNWARD LOADS WITHOUT SELF WEIGHT OF THE SLAB ITSELF
(REF. TO PECK'S "FOUNDATION ENGINEERING" P. 188)

UPWARD PRESSURE BECOMES

$$\underset{\text{(TOTAL WT.)}}{(747.2^{K}} - \underset{\text{(SLAB WT)}}{136.9^{K}}) \div 1369_{SF} = 0.45 \text{ KSF}$$

REF. TO SHT. 3 AND CONSIDERING 1.0' WIDE STRIP DESIGN THE SLAB AS A SIMPLE CANTILEVER (THIS WILL BE THE WORST CASE);

$$M_{CANT} = \frac{1}{2} \times \underset{\text{UPWARD}}{0.45_{KSF} \times 1.0'_{STRIP}} \times (6.58')^2 - \underset{\text{DIKE}}{2.0' \times 0.67' \times 1.0' \times 6.25' \times 0.15_{KF}}$$

$$= \underset{\text{SLAB THICKENING}}{2.0' \times 0.33' \times 1.0' \times 5.25' \times 0.15} = 9.74 - 1.26 - 0.52 = 7.96'^{K}$$

REF. TO H. PARKER P. 297 (& ACCORDING TO ACI 318-89, APPENDIX A)

$$A_s = \frac{M}{f_s J d}; \quad f_c' = 4_{KSI}, \quad \text{GRADE 60 STEEL}$$

$$A_s = \frac{7.96'^{K}}{1.75(8'' - 3.5)} = 1.011 \text{ IN}^2, \quad \#9 @ 12 \quad A = 1.0 \text{ IN}^2 < 1.011 \text{ IN}^2,$$

THE REINFORCEMENT IS RATHER HEAVY IF SLAB THICKNESS OF 8" IS USED. THE PAD THICKNES WAS NOT CONSIDERED ∴ CONSIDER 6" PAD AND CHECK OVERTURN AS WELL AS "PUNCHING" SHEAR

OVERTURN CHECK

FROM SHT. 3

$P = 10.84^k + 0.70^k = 11.54^k$ (EMPTY TANK

FROM SHT 5

WIND LOAD IS 3.0^k

$M_{OT} = 3.0^k \times 11' = 33.0'^k$

$M_{STAB} = 11.54^k \times 4.42' = 51.0'^k$

$1.5 M_{OT} = 1.5 \times 33.0'^k = 49.5'^k < 51.0'^k$ OK

ANCHOR BOLTS RECOMENDED

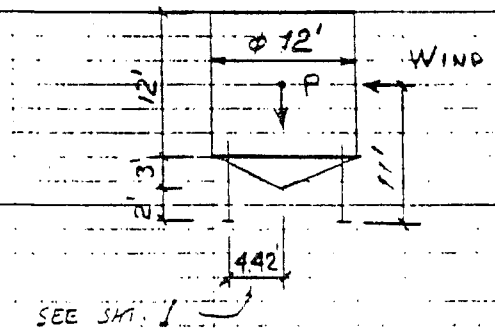

"PUNCHING SHEAR"

ASSUME COL. BASE ~~PL~~ 8" x 8"

FROM ACI 318-89 $V_c = 4\sqrt{f_c'} = 4\sqrt{4000} = 253$ PSI

FIND MAX. FACTORED LOAD PER 1 LEG.

$DL = 1.4 \times 131.1^k \div 4_{LEGS} = 48.9^k$ (SHT. 3)

$LL = 1.7 \times 33'^k \div 8.82' \div 2_{LEGS} = 3.2^k$
(M_{OT}, THIS SHT)

49.1^k

PROJECT CLEAN HARBORS PROPOSED WASTES STORAGE

SUBJECT TANK FARM DESIGN

AVERAGE EFFECTIVE DEPTH OF THE SLAB $d = 4.5''$

SHEAR PERIMETER $b_o = 4\left(8'' - 2\,\frac{4.5''}{2}\right) = 50''$ (BASE ⊕)

$$\phi V_c = 0.85 \times 253\,PSI \times 50'' \times 4.5'' = 48.38^k < 49.1^k \quad N.G$$

IT IS ALMOST OK, BUT CONSIDERING NOT VERY GOOD SOIL CONDITION & SLAB FLEXIBILITY IT IS RECOMMENDED TO USE 6" CONCRETE PAD TO PREVENT HAIR CRACKING AROUND COLUMN BASE WHICH COULD CAUSE HAZARDOUS WASTE PENETRATION.

MOREOVER, THE PAD WILL SAVE REINFORCEMENT

REFERING TO SHTS 3 & 6 CHECK THE SLAB CANTILEVER FROM THE EDGE OF 6" PAD

$$M_{CANT} = \frac{1}{2} \times 0.45\,KSF \times 1.0'\,STRIP \times (6.58' - 1.58')^2 - \underset{DIKE}{2.0' \times 0.67' \times 1.0'} \times$$

$$\times (6.25' - 1.58') \times 0.15\,KCF - \underset{SLAB\ THICKENING}{2.0' \times 0.33' \times 1.0' \times (5.25' - 1.58')}\ 0.15 =$$

$$= 5.63 - 0.94 - 0.36 = 4.33^{'k}$$

$$A_s = \frac{4.33^{'k}}{1.75\,(4.5'')} = 0.55\,IN^2 \qquad \#7\ @\ 12'' \quad A = 0.60\,IN^2 > 0.55\,IN^2$$

REF. TO SHT. 6 CHECK A_s ASSUMING $d = (8'' - 3.5'' + \underset{PAD}{6''}) = 10.5''$

$$A = \frac{7.96^{'k}}{1.75 \times 10.5''} = 0.43\,IN^2 \qquad \#6\ @\ 12'' \quad A = 0.44\,IN^2 < 0.60\,IN^2$$

$A = 0.60\,IN^2$ AT PAD EDGE GOVERNS TRY #7 @ 12"

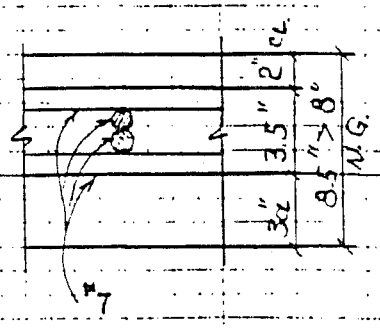

TRY 9" SLAB & #6 BARS ($A = 0.44\,IN^2$)

$$A_s = \frac{4.33^{'k}}{1.75\,(9'' - 3.375'')} = 0.440\,IN^2 = 0.44 \quad OK$$

USE #6 @ 12" E.W. T.&B. FOR 9" THK. SLAB W/ 6" THK. PAD

HOYER-SCHLESINGER-TURNER, INC.

SHEET 9 OF 41
PROJECT NO. 1785
DATE 11/7/91
BY TNS

PROJECT CLEAN HARBORS PROPOSED WASTE STORAGE F.
SUBJECT PRELIMINARY FOUNDATION DESIGN FOR PREENGINEERED BUILDING ("CANOPY")

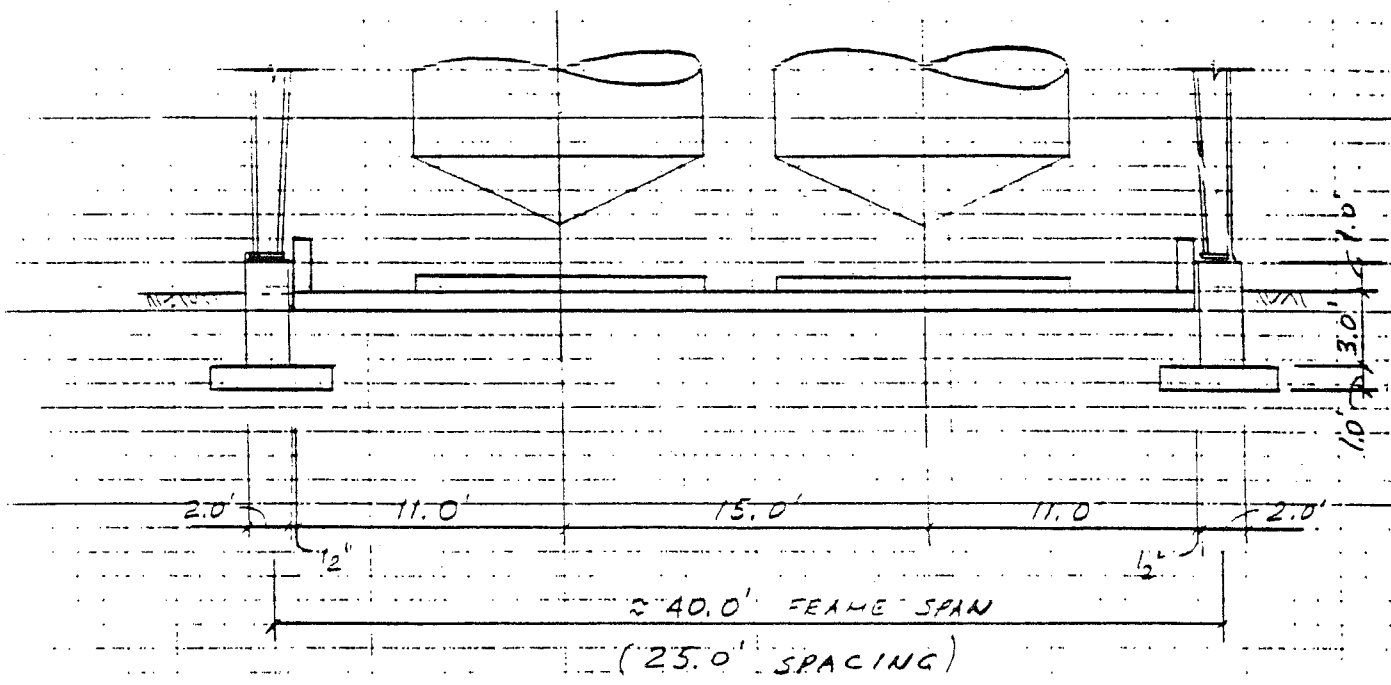

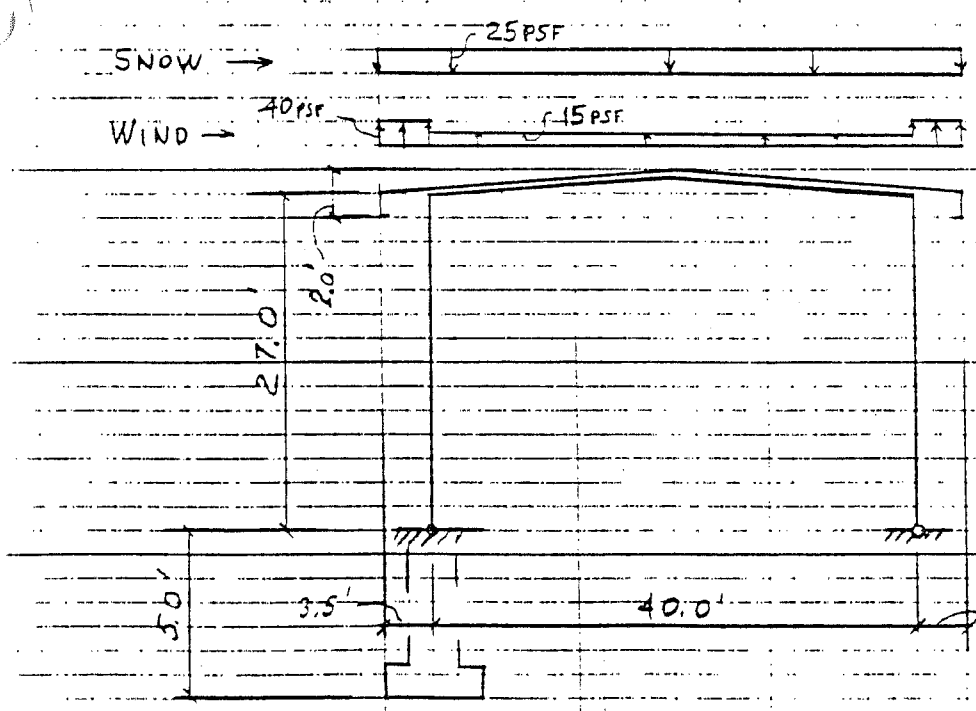

WIND PRESSURE IS 20.
(CITY OF CHICAGO BLDG. CO.
GB-4.)

FRAME SPACING 25'

HOYER-SCHLESINGER-TURNER, INC.

SHEET 10 OF 41
PROJECT NO. 1785
DATE 1/7/91
BY INS

PROJECT CLEAN HARBORS PROPOSED WASTES STORAGE - FARM

SUBJECT PRELIMINARY FOUNDATION DESIGN FOR BUILDING ("CANOPY")

ROOF STRUCTURE ≈ 10 PSF
SNOW — 25 PSF

35 PSF

TOTAL VERT LOAD ON FRAME FOOTING IS

$35\,PSF \times 23.5' \times \underset{SPACING}{25.0'} = 20.6^k$

TOTAL HOR. LOAD

$\underset{(WIND\ PRESS.)}{20.0\,PSF} \times 2.0' \times (\underset{SPACING}{25.0'} - \underset{1\ COL\ HT.\ (CONSERV.)}{27.0'}) = 2.08^k$ SAY 2.1^k

HOR. LOAD PER 1 COL. $= \frac{1}{2} \times 2.1^k = 1.05^k$

UPLIFT PER 1 COL

$(40\,PSF \times 2' + 15\,PSF \times 20.0')\,25' = 9.5^k$ > $\underset{BLDG\ SELF\ WT}{23.5' \times 25' \times 10\,PSF} = 5.88^k$

∴ UPLIFT LOAD WILL BE TAKEN BY ANCHOR BOLT

ASSUME FTG 4.0' × 5.0'

FTG VERT LOAD $= 20.6^k + 4.0' \times 5.0' \times (4.0\ DEPTH) \times \underset{AV.\ SOIL + CONCR}{0.12\,K/CUF} = 30.2^k$

FTG MOMENT $= 1.05^k\,(\underset{FOUND.\ HEIGHT}{5.0'}) = 5.25'^k$

$e = \frac{5.25^k}{20.6^k} = 0.17'$

$q = \frac{Q}{A}\left(1 \pm 6\frac{e}{B}\right) = \underset{(LOG)}{\frac{30.2^k}{4' \times 5'}}\left(1 \pm 6\frac{0.17'}{5'}\right) = \underset{(1.20\,KSF)\ MIN}{1.82\,KSF} > 1.50\,KSF$ ALLOWE

N.G.

HOYER-SCHLESINGER-TURNER, INC.

SHEET 11 OF 41
PROJECT NO. 1785
DATE 11/7/91
BY JMS

PROJECT CLEAN HARBORS PROPOSED WASTES STORAGE FARM

SUBJECT PRELIMINARY FOUNDATION DESIGN FOR "CANOPY"

∴ USE 1/3 STRESS INCREASE FOR COMBINED STRESS AS PER

68-4.7 OF CITY OF CHICAGO BLDG. CODE

1.82 KSF × 0.75 = 1.36 KSF < 1.50 KSF ALLOW. SOIL PRESSURE

∴ USE 4' × 5' FOOTING 12" THK WITH #5 @ 12" EA WAY

2.0' × 2.0' PIER WITH 4-#5 DOWELS & #4 @ 12" TIES

PROJECT CLEAN HARBORS PROPOSED FLAMMABLE STORAGE

SUBJECT CONTAINMENT CALCULATIONS FOR 8000 GAL TANK

TANK DESIGN CAPACITY IS 11025 GAL

TRY DIKE HT 3'-6"

ITEM 1 CONTAINMENT VOLUME

$3.5' \times (25.0')^2 = 2187.5$ CU. FT ← (REVISED)

ITEM 2 CONCRETE PADS DISPLACEMENT VOLUME.

1 PAD $\times 0.5' (12.0')^2 = 72.0$ CU. FT

ITEM 3 TANK DESIGN CAPACITY WITH 1.25 FACTOR (CHGO CODE

$1.25 \times 11.025 / 7.48 = 1842.4$ CU. FT

ITEM 4 ITEM 1 IS TO BE LARGER THAN ITEMS 2 & 3 TOGETHER

2187.5 CU. F > 1842.4 + 72.0 = 1914.4 CU. F

∴ OK

NOTE: THE ABSOLUTE MINIMUM HEIGHT OF DIKE IS

$(1842.4 \text{ CU. FT} + 72 \text{ CU. FT}) \div (25')^2 = 3.06'$

WITH DIKE HT. 3'-3" ITEM 1 BECOMES $3.25'(25.0') = 2031.$

CONTAINMENT CAPACITY:

(ITEM 1) 2031.2 CU. FT − (ITEM 2) 72.0 CU. FT = 1959.2 CU. F

1959.2 × 7.5 = 14.694 GALS

HOYER-SCHLESINGER-TURNER, INC.

SHEET 13 OF 41
PROJECT NO. 1785
DATE 01/07/91
BY TNS

PROJECT CLEAN HARBORS PROPOSED FLAMMABLE STORAGE
SUBJECT TANK FARM DESIGN FOR 8000 GAL. TANKS AREA

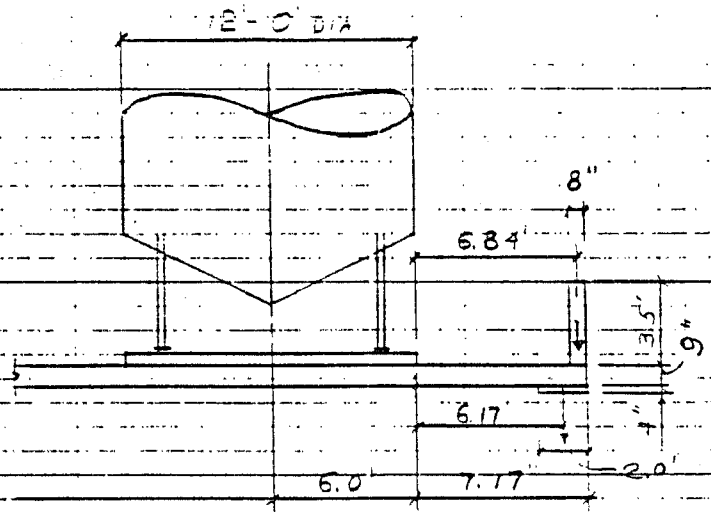

REF. TO SHT. 3 — TOTAL TANK WT WITH LIQUID - 131.0^K

DESIGN ASSUMTION: CHECK THE SLAB AS CANTILEVER BEAM ASSUMING ALL TANKS ARE FULL.

REF. TO SHT. 5 WE CAN SEE THAT WIND LOAD IS INSIGNIFIC FOR 37' SQUARE FOOTING/SLAB. FOR 52' SQUARE SLAB THE WIND CAN BE NEGLECTED AS WELL.

FIND SOIL PRESSURE (CONSIDER SLAB PORTION UNDER 1 TANK)

TANK FARM SLAB AREA = $(52.0' + 2)^2 = 676.0$ S.F.

DIKE WT. = $3.5' \times \frac{9''}{12} \times (52' + 26' - \frac{8''}{12}) \times 0.15$ k/cf = 30.5^K

PAD WT. = $(12.0)^2 \times 0.5' \times 0.15$ = 10.8^K

SLAB WT. = $676.0_{SF} \times \frac{8''}{12} \times 0.15$ = 67.6^K

SLAB THICK. = $2.0' \times \frac{4''}{12} \times 52' \times 0.15$ = 5.2^K

TANK WT 131.0^K

245.1^K

AVERAGE SOIL PRESSURE IS

$245.1^k \div 676.0\ sf = 0.36\ ksf < 1.5\ ksf$

TO DESIGN THE SLAB USE SUM OF DOWNWARD LOADS WITHOUT SELFWEIGHT OF THE SLAB INSELF.

UPWARD PRESSURE BECOMES

$(245.1^k - 6.26^k) \div 676.0\ sf = 0.26\ ksf$
TOTAL SLAB

REF. TO SHT. 13 AND CONSIDERING 1.0' WIDE STRIP DESIGN THE CANTILEVER AS A SIMPLE CANTILEVER.

$M_{CANT} = \frac{1}{2} \times 0.26\ ksf \times (1.0' \times 17.17')^2 - 3.5' \times 0.67' \times 6.89' \times 0.15 -$

$- 2.0' \times 0.33' \times 1.0' \times 6.17' \times 0.15 = 6.69 - 2.41 - 0.61 = 3.67'^k$

$A_s = \frac{3.67'^k}{1.75(9" - 3.375")} = 0.373\ in^2$; #6 @ 12" $A = 0.44\ in^2 > 0.373\ in^2$ OK

USE REINFORCEMENT #6 @ 12" EA. WAY TOP & BOTT. FOR 9" THICK SLAB WITH 12' × 12' PADS 6" THK AS WAS USED ON SHT. 8 FOR WASTES STORAGE.

PROJECT CLEAN HARBORS PROPOSED FLAMMABLE STORAGE

SUBJECT CONTAINMENT CALCULATIONS FOR 16000 GAL TANKS

TANK DESIGN CAPACITY IS 19 880 GALS

TRY DIKE HEIGHT 4.0'

ITEM 1 CONTAINMENT VOLUME

$4.0' \times (30.0')^2 = 3600.0$ CU.FT

ITEM 2 CONCRETE PADS DISPLACEMENT VOLUME

1 PAD $\times 0.5 \left[(16.0')^2 - 4 \text{ CORNERS } (4.686')^2 \div 2 \right] = 106.0$ CU.FT

ITEM 3 TANK DESIGN CAPACITY WITH 1.25 FACTOR

$1.25 \times 19880 / 7.48 = 3322.2$ CU.FT

ITEM 4 ITEM 1 IS TO BE LARGER THAN ITEMS 2 & 3 TOGETHER

3,600 CU.FT $> 106.0 + 3322.2 = 3428.2$ CU.FT

∴ OK, USE DIKE 4'-0"

CONTAIN. CAPACITY: (ITEM 1) 3600.0 CU.FT − (ITEM 2) 106.0 = 3494 CU.FT
OR $3494 \times 7.5 =$ 26205.0 G

USING PREVIOUS SHEETS OF THE CALCS AND ENGINEERING JUDGEMENT, SAY

SLAB REINFORCEMENT − #6 @ 12" EA WAY TOB & BOTT.
FOR 9" THK SLAB WITH 16'×16' OCTAGONAL PADS 6" THK,

PROJECT CLEAN HARBORS CHICAGO IL

SUBJECT 4.0' DIKE DESIGN FOR PROPOSED SLAMMAKE SITE

THE 4.0' DIKE WALL IS TO BE DESIGNED IS A SIMPLE RETAINING WALL

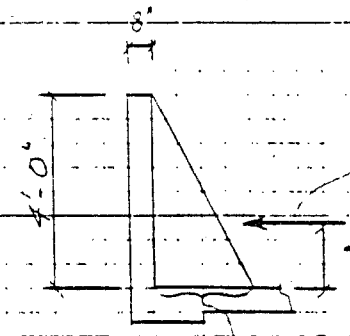

ASSUME 1.0' STRIP

$325\,psf \times \frac{4.0'}{2} \times 1.0' = 650\,lb = 0.65^k$

$4'/3 = 2.67'$

$62.5\,pcf \times 1.3 \times 4.0' = 325\,psf$
SP. GRAV

$M = 0.65^k \times 2.67' = 1.74'^k$

$A_s = \frac{M}{f_s J d} = \frac{1.74'^k}{1.75(4.0")} = 0.24\,in^2$ #5 @ 12" $A = 0.31\,in^2 > 0.24$

∴ OK

USE DIKE VERT. REINF #5 @ 12" EA WAY IN MID THK OF THE DIKE

PREENGINEERED BUILDIG FOOTINGS (PRELIMINARY)

REF. TO SHTS 9 - 11 AND USING ENGINEERING JUDGEMENT

SAY: VERT. LOAD $= 30.2^k \times \frac{62'\,span}{40'\,span} \times \frac{20'\,spacing}{25'\,spacing} = 37.5^k$, HOR. LOAD $\approx 1.0^k$

USE 4' x 6' FOOTINGS 12" THK WITH #5 @ 12" E. W.

2' x 2' PIER WITH 4 - #5 DOWELS & #4 @ 12" TIES

HOYER-SCHLESINGER-TURNER, INC.

SHEET 17 OF 41
PROJECT NO. 1785
DATE 1/8/91
BY JNS

PROJECT CLEAN HARBORS CHICAGO IL

SUBJECT TRUCK LOAD FAT. SLAB DESIGN (Dwg. No. 4216)

SLAB DESIGN LOAD FOR TRUCK / TANKER IS 33,000# (0.4 × 80,000 FOR DUAL TIRE AXLE (20% IMPACT INCLUDED). TOTAL TRUCK WT)

THE CENTER TO CENTER SPACING OF THE TWO TIRES IS 13.6" AND THE TIRE PRESSURE IS 75 PSI

THE MODULUS OF SUBGRADE REACTION K = 200 PSI / INCH

FACTOR SAFETY = 2

MODULUS OF RUPTURE OF 700 FOR CONCRETE AT 28 DAYS

REF TO ACI STANDARD (ACI 325-58) PAGE 44 (A COPY ON NEXT PAGE, SHT. 18)

SLAB THICKNESS REQUIRED ≈ 9.65" < 10.0" ∴ OK

REF. TO P. 41 OF ACI 325-58, FIND REINFORCEMENT:

$$A_s = \frac{F\,L\,W}{2\,f_s}$$ — AREA OF STEEL REQUIRED PER FOOT OF SLAB WIDTH.

$$A_s = \frac{1.5 \times 30' \times 150\,pcf \times 10''/12}{2 \times 2400} = 0.12\,in^2$$ #4 @ 12" – 0.20 in² > 0.12

USE 10" THK SLAB WITH #4 @ 12" EA. WAY TOP & BOTT.

HOYER-SCHLESINGER-TURNER, INC.

SHEET 18 OF 4
PROJECT NO. 178
DATE 1/8/9
BY EMS

PROJECT CLEAN HARBORS CHICAGO IL

SUBJECT TRUCK LOAD PAD SLAB DESIGN

ACI STANDARD RECOMMENDED PRACTICE FOR DESIGN OF CONCRETE PAVEMENTS (ACI 325-58)

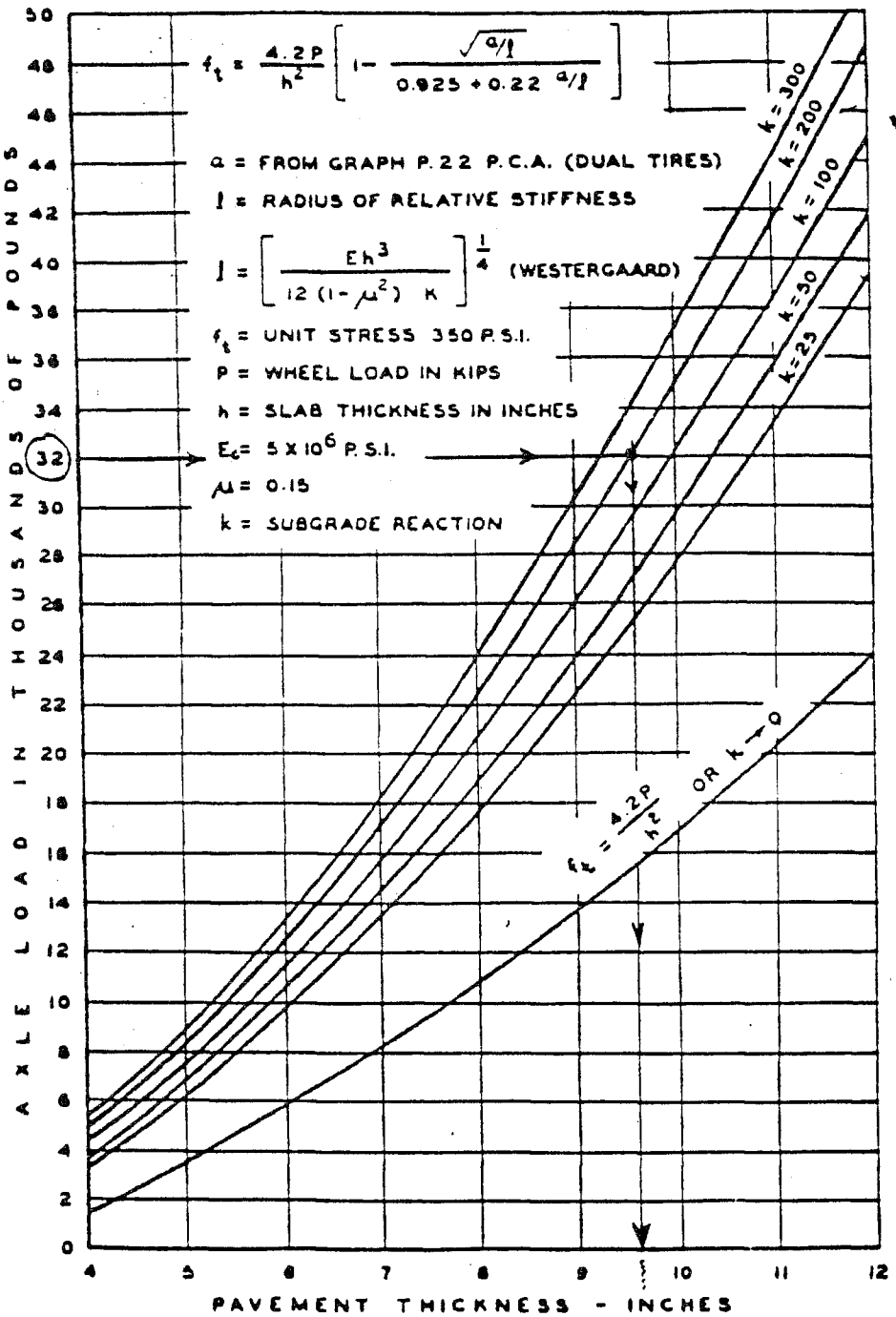

Fig. A401(b)—Design chart based on Eq. (11) for portland cement concrete pavements —unprotected corners*

*For modulus of rupture values greater or less than 700 psi, see design chart (Fig. 5), ap. cu.

HOYER-SCHLESINGER-TURNER, INC.

SHEET 19 OF 4
PROJECT NO. 1785
DATE 1/8/91
BY INS

PROJECT CLEAN HARBORS CHICAGO, IL

SUBJECT CONTAIN. CALC'S FOR SLUDGE CONDIT. TANK

TANK CAPACITY IS APPROX.

$\pi (5.0')^2 \times 20.0'$ HT ≈ 1570.8 CU.F.

OR 11,780 GAL. (DWG. 42)

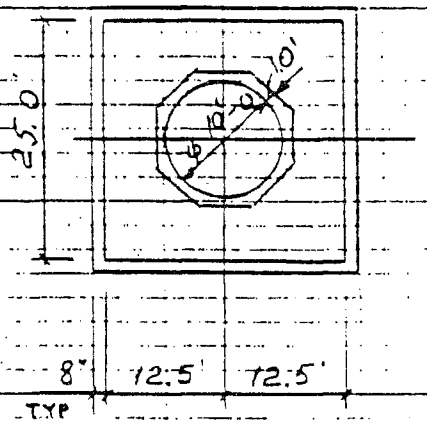

TRY DIKE WALL 3.25' HIGH

REF. TO SHT. 2

ITEM 1 CONTAINMENT VOLUME

$(25.0')^2 \times 3.25' = 2031.2$ CU.F.

ITEM 2 CONC. PAD DISPLACEMENT VOLUME: $0.5' \times 123.24$ SF = 61.6 CU

$2.278' = \frac{5.5'}{\cos 45} - 5.5'$

AREA $= (12.0')^2 - 2(3.22')^2 = 123.24$ SF

$3.22' = 2.278 \div \cos 45$

ITEM 3 TANK DISPLACEMENT VOLUME

NOT APPLICABLE FOR 1 TANK CONTAINMENT

ITEM 4 25 YEARS 24 HOURS RAIN FALL IS 6"

$(25')^2 \times 0.5' = 312.5$ CU. FT

HOYER-SCHLESINGER-TURNER, INC.

SHEET 20 OF 41
PROJECT NO. 1785
DATE 1/9/81
BY INS

PROJECT CLEAN HARBOR CHICAGO, IL

SUBJECT CONTAIN. CALCS FOR SLUDGE COND. TANK

ITEM 5

ITEMS 2, 3 & 4 TOGETHER PLUS TANK CAPACITY ARE TO BE LESS THAN ITEM 1

61.6 CU.F + 0 + 312.5 + 1570.8 = 1944.9 CU.F < 2037.2 CU.F

∴ OK, USE DIKE HT. 3'-3"

CONTAINMENT CAPACITY

(ITEM 1) 2037.2 CU.F − 61.6 CU.F (ITEM 2) = 1969.6 CU.F OR

1969.9 × 7.5 = 14772 GALS

REF. TO SHTS. 13 & 14 OF THESE CALCS & USING ENGINEERING JUDGEMENT SAY:

USE #6 @ 12" EA. WAY TOP & BOTT. FOR 9" THK SLAB WITH 6" THK. PADS.

HOYER-SCHLESINGER-TURNER, INC.

SHEET 21 OF 41
PROJECT NO. 1785
DATE 1/10/91
BY JAS

PROJECT CLEAN HARBOR CHICAGO IL

SUBJECT DESIGN CALCS FOR PROPOSED LAB-PACK REPACK & CONSOLIDATION AREA

REF. TO DWG 4211

THICKNES DESIGN FOR FLOOR SLAB (REF. TO PCA CONCRETE FLOORS ON GROUND, P 12)

USE DATA FOR LIFT TRUCK

AXLE LOAD 25 K (SINGLE-WHEEL AXLE)

WHEEL SPACING 37"

NUMBER OF WHEELS = 2

TIRE INFLATION PRESSURE = 110 PSI

TIRE CONTACT AREA IS $\frac{\text{WHEEL LOAD}}{\text{INFL. PRESSURE}} = \frac{25000\#}{110} = 114$ SQ. IN

CONCRETE FLEX. STRENGTH MR = 640 PSI (FOR $f_c' = 4000$ PSI)

SUBGRADE MODULUS K = 100 PSI

SAFETY FACTOR FOR FREQUENT OPERATIONS SF = 2.0

CONC. WORKING STRESS $WS = \frac{MR}{SF} = \frac{640}{2.0} = 320$ PSI

SLAB STRESS PER 1000# OF AXIAL LOAD

$\frac{WS}{\text{AXLE LOAD (KIPS)}} = \frac{320}{25} = 12.8$ PSI / 1000#

FROM FIG. 5 (P. 11) — SEE NEXT SHEET No. 22 — THK = 7.9"

USE 8" THK SLAB W/ WWF 6×6 — W2.9 × W2.9 IN CENTER OF

HOYER-SCHLESINGER-TURNER, INC.

PROJECT CLEAN HARBOR CHICAGO IL

SUBJECT SLAB DESIGN FOR FORKLIFT LOAD

SHEET 22 OF 4
PROJECT NO. 1785
DATE 1/10/91
BY TNS

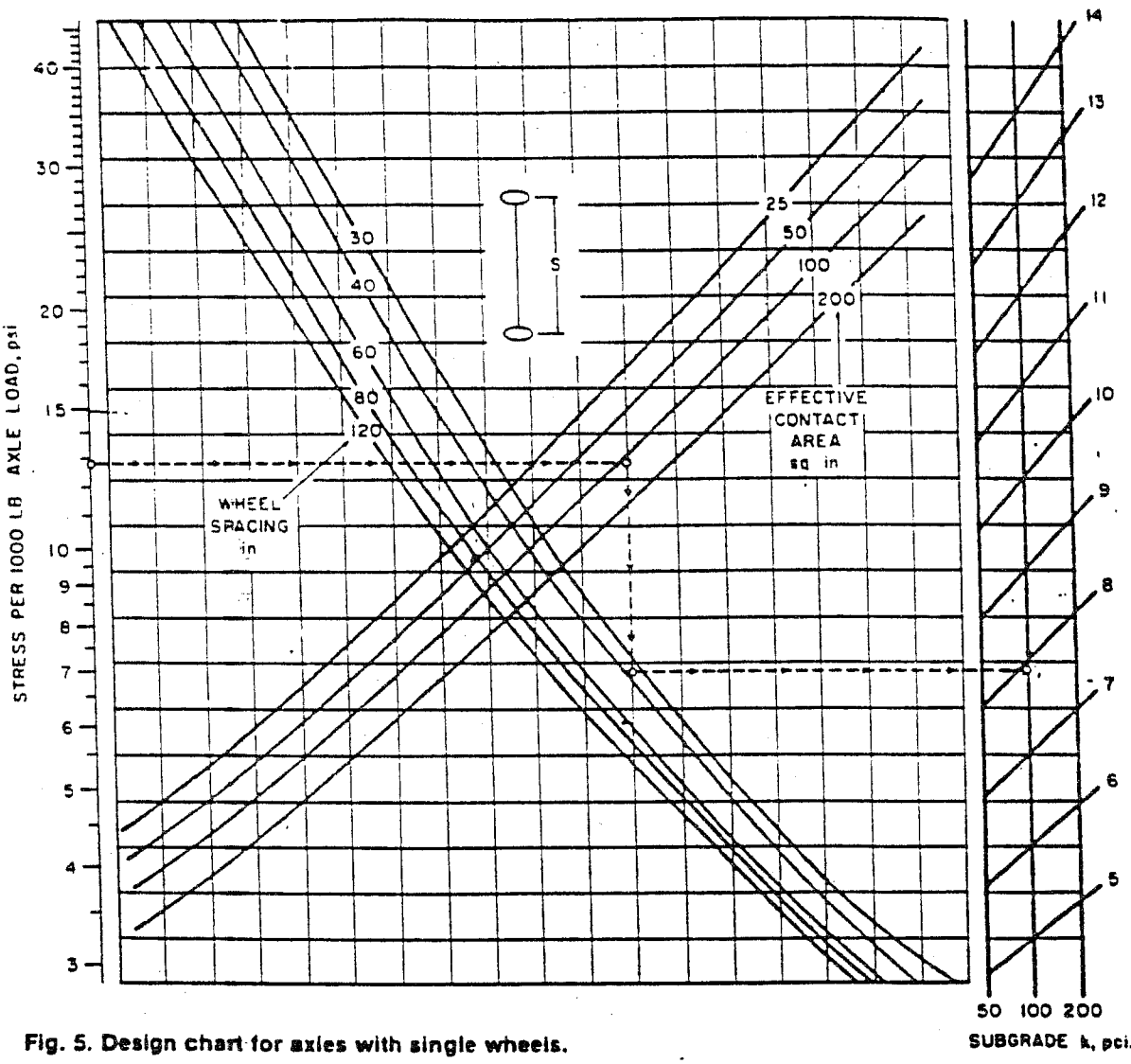

Fig. 5. Design chart for axles with single wheels.

HOYER-SCHLESINGER-TURNER, INC.

SHEET 23 OF 41
PROJECT NO. 1785
DATE 1/10/91
BY INS

PROJECT CLEAN HARBOR CHICAGO IL

SUBJECT DESIGN CALCS FOR PROPOSED LAB-PACK REPACK & CONSOLIDATION AREA

FOUNDATION DESIGN

ASSUME TOTAL ROOF LOAD EXCLUDING SNOW, DECK & JOISTS ABOUT 35 PSF. FRAMING - K JOISTS @ 5'-0", 29" DEEP

CMU WALL TO BE 20' HIGH, MIN. THK. IS 10"

LOAD ON 1' L/F OF FOOTING IS:

$$\underbrace{(40.0' \div 2)}_{\text{JOISTS SPAN}}(35\,PSF) + \underbrace{20.0' \times 80\,PSF}_{\text{WALL}} + \underbrace{5.0' \times 1.0' \times 150\,PSF}_{\text{FDN. WALL}} = 3.05^{K}/LF$$

F.T.G. WIDTH IS TO BE $3.05^{K}/' \div \underbrace{1.5\,KSF}_{\text{SOIL CAPACITY}} = 2.03'$

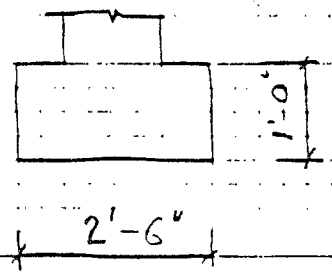

USE 2'-6" FTG. WIDTH

HOYER-SCHLESINGER-TURNER, INC.

SHEET 24 OF 41
PROJECT NO. 785
DATE 1/10/91
BY INS

PROJECT CLEAN HARBOR CHICAGO IL

SUBJECT BULK SOLIDS & MEDICAL WASTE CONTAINMENT CALCS.

REF. TO DWG. 4218

MEDICAL WASTE CONTAINMENT VOLUME

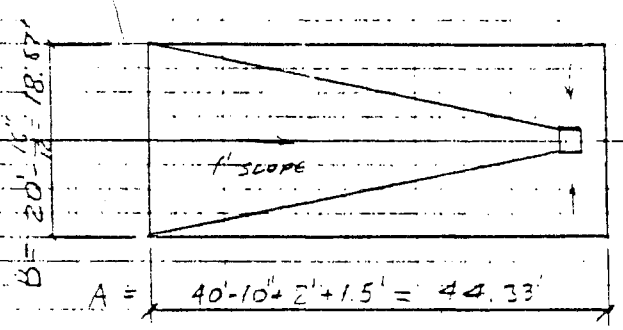

$h_{PIRAMID} = (12" - 3") = 9"$

$V = \frac{1}{3}(18.67' \times 44.33')\,0.75' + (2.0')^3$ (PIRAMID, SUMP)

$= 214.9$ CU.F.

CONTAINMENT CAPACITY

$214.9 \times 7.5 = 1612$ GALS

BULK SOLIDS STORAGE CONTAINMENT

$A = 44.33'$, $B = 70.0' - \frac{16"}{12} = 68.67'$

$h_{PIRAMID} = 9"$

$V = \frac{1}{3}(68.67' \times 44.33')\,0.75' + (2.0')^3 = 769.0$ CU.F (PIRAMID, SUMP)

CONTAINMENT CAPACITY

769.0 CU.F. $\times 7.5 = 5767$ GALS

FLOOR SLAB DESIGN FOR HEAVY TRUCKS

REF TO SHT 17

USE 10" THK. SLAB WITH #4 @ 12" EA. WAY TOP & BOTT.

HOYER-SCHLESINGER-TURNER, INC.

SHEET 25 OF 41
PROJECT NO. 1785
DATE 1/11/91
BY INS

PROJECT CLEAN HARBORS CHICAGO, IL

SUBJECT EQUIPMENT LAYOUT - PROPOSED FUELS BLENDING OPERATION REF. DWG. 4213 SHT 2 OF 2

CONTAINMENT CALCULATIONS FOR TANK #161 (5,000 GALS.)

ITEM

1. FLOOR AREA = $\left(51.0' - \frac{2(18.5")}{12}\right) \times \left(43.0' - \frac{2(18.5")}{12}\right) = 1912.7$ SF

FLOOR SLOPED 2" IN 10' = 2" ÷ 120" = 1:60 (SEE PLAN, DWG. 4213 SH

DISTANCE FROM OVERHEAD DOOR TO FLOOR SUMP IS ≈ 33.7'

DEPRESSION IS 33.7' × (1:60) = 0.56'

2. CONTAINMENT VOLUME (AS FOR A PIRAMID)

$\frac{1}{3} \times 1912.7$ SF × 0.56' = 357.0 CU.F OR 2677.8 GALS ≪ 5000G

LARGEST CAPA

CONSIDER CURB 5" HIGH.

ADDTL. CONTAINMENT IS (FLOOR AREA) × $\frac{5"}{12}$ = 1912.7×0.417 = 797.0

3. TOTAL CONTAINMENT VOLUME BECOMES:

357.0 CU.F + 797.0 CU.F = 1154.0 CU.F OR

1154.0 CU.F × 7.5 = 8655 GAL.

4. DISPLACEMENT AREA

PUMPS #160, 162, 163, 167 & 2-#173 = 6 PUMPS × (2.5)² = 37.5 SF
CONSERVATIVE

DRUMS: 20 × 4 × $\frac{\pi \times (2.0')^2}{4}$ = 251.3 SF

TOTAL DISPLACEMENT AREA = 37.5 + 251.3 = 288.8 SF

CONSERVATELY ASSUME THE DEPTH OF DISPLACEMENT AREA

PROJECT CLEAN HARBORS, CHICAGO, IL

SUBJECT EQUIPMENT LAYOUT - PROPOSED FUELS BLENDING

EQUAL 1.0' (FROM PREVIOUS SHT 25 1) - DEPRESSION IS 0.56'
2) - CURB IS 5" OR 0.42'
0.98')

CONTAINMENT CAPACITY OF THE BUILDING IS:

(ITEM 3) 1154.0 CU.F - (ITEM 4) 288.8 SF × 7.0' = 865.2 CU.FT

OR 865.2 × 7.5 = 6489 GAL > 5000 GAL
LARGEST TANK

∴ OK

FLOOR SLAB DESIGN

LIFT TRUCK LOAD IN THE BUILDING

REF TO SHT 21

USE: 8" THK SLAB WITH WWF 6×6 - W2.9 × W2.9

FLOOR SLAB FOR 30 CU. YD. ROLL OFF (WEST OF THE BUILDING) TO BE DESIGNED FOR HEAVY TRUCK LOAD

REF. TO SHT 17

USE: 10" THK SLAB WITH #4 @ 12"
EA. WAY T & BOTT

PROJECT CLEAN HARBORS CHICAGO IL

SUBJECT EQUIPMENT LAYOUT - PROPOSED FUELS BLENDING

DWG 4213 SHT 2 of 2

5,000 GAL TANK FOUNDATION DESIGN

DIA. = 9.0'

VOLUME = $\frac{\pi \cdot (9.0')^2}{4} \times H = 5000\,GAL \frac{1}{7.5}$

THEORETICAL

H = 10.5' SAY HEIGHT = 11.0'

TANK SELFWEIGHT = $\pi\left(\underbrace{9.0' \times 11.0'}_{SHELL} + \underbrace{\frac{(9.0')^2}{4} \times 2}_{TOP\ \&\ BOTT}\right) \times \underbrace{12.8\,PSF}_{5/16\ PL} \times \underbrace{1.08}_{MISC.} = 6.06^K$

LEG WT ≈ 4 LEGS × 5.0' × 25 #/LF ≈ 0.50^K

LIQUID: 5,000 GAL × 8.336 #/GAL × 1.2 SP. GRAV = 50.02^K

TOTAL WT ≈ 56.6^K

ACCORDING TO CITY OF CHICAGO BUILDING CODE THE FOUNDATION FOR TANKS OVER 2,500 GAL VOLUME TO BE DESIGNED INDEPENDENT FROM FLOOR SLAB

ASSUME SQUARE FOOTING / SLAB 9'-0" × 9'-0", 8" THK

TOTAL LOAD ON THE BASE

$56.6^K + (9.0')^2 \times \frac{8"}{12} \times 0.15^K/CU.F = 56.6^K + 8.1^K = 64.7^K$

SOIL PRESSURE = $\frac{64.7^K}{(9.0')^2}$ = 0.80 KSF < 1.50 KSF ALLOW, OK

PROJECT CLEAN HARBORS CHICAGO IL

SUBJECT EQUIPMENT LAYOUT - PROPOSED FUEL BLENDING

CHECK "PUNCHING SHEAR"

ASSUME COL. BASE PL 6" × 6"

FROM ACI 318-89 $V_c = 4\sqrt{f'_c} = 4\sqrt{4000} = 253$ PSI

MAX. FACTORED LOAD PER 1 LEG

$1.4 \times 56.6^k \div 3 = 26.4^k$ (3 LEGS ASSUMED)

AVER. EFFECTIVE DEPTH OF 8" SLAB $d = 4.5"$

SHEAR PERIMETER $b_o = (\underset{\text{BASE PL}}{6"} + 2 \times \frac{4.5"}{2})\,4 = 42"$

$\phi V_c = 0.85 \times 253\text{ PSI} \times 42" \times 4.5" = 40.6^k > 26.4^k$ ∴ OK

CHECK THE SLAB FOR FLEXTURE

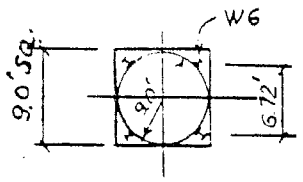

$(9.0' + \frac{6"}{12})\cos = 6.72'$

CONSERV. TAKE 1.0' STRIP AS SIMPLE SUPPT. BEAM WITH 6.72' SPAN. $d = 4.5"$

$M = \frac{w\,l^2}{8}$ $w = \underset{(\text{SHT. 27})}{56.6^k} \div (9.0')^2 \times \underset{\text{WIDE}}{1.0'} = 0.70^{k/'}$ (SOIL PRESSURE WITHOUT SLAB WT

$M = \frac{0.7^{k/'}(6.72')^2}{8} = 4.0'^k$

$A_s = \frac{4.0'^k}{1.75(8"-3.5")} = 0.51\text{ IN}^2$ #7 @ 12" $A = 0.60\text{ IN}^2 > 0.51\text{ IN}^3$

∴ OK BUT THE REINFORCEMENT IS RATHER HEAVY AND ALS TO KEEP TANK FOOTING/SLAB WORKING INDEPENDE FROM FLOOR SLAB, INCREASE THE THICKNESS.

HOYER-SCHLESINGER-TURNER, INC.

SHEET 29 OF 41
PROJECT NO. [illegible]
DATE [illegible]
BY [illegible]

PROJECT CLEAN HARBORS, CHICAGO IL

SUBJECT EQUIPMENT LAYOUT - PROPOSED FUEL BLENDING

TRY 12" SLAB, d = 7"

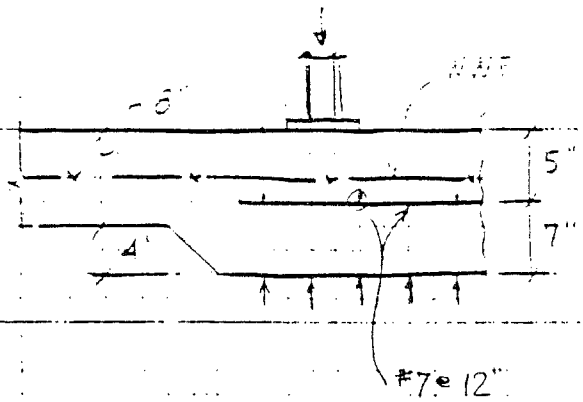

$A_s = \frac{40^{'k}}{.75(7")} = 0.32 \text{ in}^2$

#6 @ 12" A = 0.44 in² > 0.3

∴ OK

USE 12" THK FOOTING

AND #6 @ 12" E.W. PEINF

HOYER-SCHLESINGER-TURNER, INC.

SHEET 30 OF 41
PROJECT NO. 1785
DATE 11/14/91
BY INS

PROJECT C-SAN HARBOR CHICAGO, IL

SUBJECT PROPOSED STEEL BUILDING #3
CONTAINMENT CALCULATIONS

CONTAINMENT CAPACITY IS TO BE 100% OF THE LARGEST TANK VOLUME OR 10% OF TOTAL VOLUME OF ALL TANKS.

142 - SLUDGE COND. TANK - 3,000 GAL
153 - TREATED EFFLUENT TANK - 2,000 GAL
150 - BACKWASH TANK - 1,000 GAL
123 - FRP REACTOR VESSEL - 12,000 GAL

137, 138 - CLARIFIER & TANK ≈ 5,000 GAL (CONSERV.)
128 - SCRUBBING LIQUID 200 GAL
132 - COOLING WATER 2,000 GAL

25,200 GAL × 0.10 = 2,520 GAL

12,000 GAL LARGEST TANK GOVERNS (TANK # 123)

CONTAINMENT VOLUME:

FLOOR SLOPE IS 1" IN 10', OR 1:120 (REF TO SHT 4229)

ITEM 1

$$\text{FLOOR AREA} = \left(102' - \frac{2(18.5")}{12}\right) \times \left(62' - \frac{2(18.5")}{12}\right) = 5827.8 \text{ SF}$$

FLOOR SLOPE IS 1:120

DISTANCE FROM 12' DOORS WALL TO SUMP ≈ 37'

∴ DEPRESSION IS 50.0' (1:120) = 0.42'

ITEM 2 CONTAINMENT VOLUME (AS FOR A PIRAMID)

1/3 × 5827.8 SF × 0.42' = 809.4 CU.F OR 6070.6 GAL < 12,000 GAL TA

CONSIDER CURB 3" HIGH. ADDTL. CONTAINMENT IS
(FLOOR AREA) × 3"/12 = 5827.8 SF × 3"/12 = 1457.0 CU.F OR 10,927 GAL

HOYER-SCHLESINGER-TURNER, INC.

SHEET 31 OF 41
PROJECT NO. 1785
DATE 11/14/91
BY INS

PROJECT CLEAN HARBORS CHICAGO IL

SUBJECT PROPOSED PROCESS BUILDING #3
CONTAINMENT CALCULATIONS

ITEM 3 TOTAL CONTAINMENT VOLUME BECOMES

6070.6 GAL + 10,927 GAL = 16998 GAL

ITEM 4 DISPLACEMENT AREA

TANKS #150, 153, 138, 142, 130 (4 THUS), 147 – 9 TOTAL

AREA = 9 TANKS × π/4 × 8.0' = 56.5 SF (CONSERVATIVE)

PUMPS: 17 PUMPS × (2.5')² = 106.3 SF (CONSERVATIVE)

PADS 2 PADS × 12' × 6.0' = 144.0 SF

TOTAL DISPLACEMENT AREA 306.8 SF

CONSERVATIVELY ASSUME THE DEPTH OF DISPLACEMENT AREA EQUAL 0.42' (FROM PREVIOUS SHT. 30)

CONTAINMENT CAPACITY OF THE BUILDING IS

(ITEM 3) 16998 GAL – (ITEM 4) 306.8 SF × 1.0' × 7.5 = 14697 GAL >

> 12,000 GAL TANK

∴ OK

3" HIGH CURB AND FLOOR SLOPE 1" TO 10' SUFFICIENT.

HOYER-SCHLESINGER-TURNER, INC.

SHEET 32 OF 41
PROJECT NO. 1785
DATE 11/4/91
BY TAS

PROJECT CLEAN HARBORS [illegible]
SUBJECT PROPOSED [illegible] BUILDING #3

FLOOR SLAB DESIGN

REF TO SHT. 21 & USING THE SAME LIFT TRUCK LOAD SAY

SLAB 8" THK WITH WWF 6×6 – W2.9 × W2.9 IN CENTER OF SLAB

THE SLAB IS GOOD FOR 25K LIFT TRUCK AXLE LOAD, OR 12.5K LOAD APPLIED IN ONE PLACE.

MOST OF THE EQUIPMENT UNITS ARE LIGHTER, THEN 25K, FOR EXAMPLE #132 – 2,000 GAL COOLING WATER TANK WEIGHT IS 2000 GAL × 8.34#/GAL = 16,680 LB – SELFWT < 25K

SAY: THE 8" THK SLAB W/ WWF 6×6 – W2.9 × W2.9 IS SUFFICIENT FOR ALL UNITS OF EQUIPMENT EXCEPT OF TANK # 142 FOR 3,000 GALL & TANK # 133 FOR 12,000 GAL

ACCORDING TO CITY OF CHICAGO BUILDING CODE TANKS OVER 2500 GAL CAPACITY HAVE TO BE SUPPORTED INDEPENDENT FROM FLOOR SLAB.

∴ DESIGN FOUNDATIONS FOR TANKS 12,000 GAL & 3,000 GALS.

REF. TO SHT 3 WE CAN SEE TOTAL WEIGHT (WITH LIQUID) OF 11,025 GAL TANK IS 131.0K

FOR 12 000 GAL TANK SAY: $131.0^K \frac{12000}{11025} = 142.6^K$

SAY: TOTAL WT OF 12,000 GAL TANK IS ≈ 143K

ASSUME SQUARE FOOTING/SLAB 12'-0" × 12'-0" 12" THK

HOYER-SCHLESINGER-TURNER, INC.

SHEET 33 OF 41
PROJECT NO. 1735
DATE 11/12/91
BY IAS

PROJECT CLEAN HARBORS CHICAGO, IL

SUBJECT PROPOSED PROCESS BUILDING #3
12'×12' TANK FOOTING DESIGN

TOTAL LOAD ON THE BASE IS
$143.0^k - (12.0')^2 \times 1.0' \times 0.15^k/cf = 164.6^k$

SOIL PRESSURE $= \frac{164.6^k}{144 sf} = 1.14$ KSF $<$ 1.5 KSF ALLOW. PRESSURE

∴ OK

CHECK "PUNCHING" SHEAR

ASSUME COL. BASE @ 8"×8"

$V_c = 4\sqrt{f_c'} = 4\sqrt{4000} = 253$ psi

MAX. FACTORED LOAD PER 1 LEG

$1.4 \times 143^k \div 3 = 66.7^k$ 3 LEGS ASSUMED CONSERV.

AVER. EFF DEPTH ASSUME 6"

SHEAR PERIMETER $b_o = (\underset{\text{BASE @}}{8''} + 2\,\frac{6''}{2})4 = 56''$

$\phi V_c = 0.85(253 psi) \times 56'' \times 6'' = 72.2^k > 66.7^k$ OK

CHECK THE SLAB FOR FLEXURE

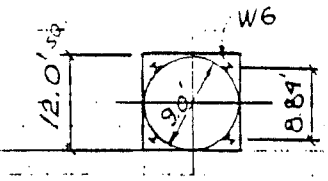

$\left(12' + \frac{6''}{12}\right)\cos 45$
$= 8.84'$

CONSERV. TAKE 1.0' STRIP AS SIMPLE SUPPT. BEAM WITH 8.84' SPAN. $d = 6.0''$

$M = \frac{wl^2}{8}$; $w = 143^k \div (12.0')^2 \times 1.0'$ WIDE $= 0.99^k/'$ (SOIL PRESSURE WITHOUT SLAB WT)

$M = \frac{0.99(8.84')^2}{8} = 9.67'^k$; $A_s = \frac{9.67'^k}{1.75(6'')} = 0.92 in^2$, #9 @ 12", VERY HEAV

USE DOUBLE REINF.

THICKEN THE SLAB TO 16"

HOYER-SCHLESINGER-TURNER, INC.

SHEET 34 OF 41
PROJECT NO. 795
DATE 11/15/01
BY JMS

PROJECT CLEAN HARBORS CHICAGO IL

SUBJECT PROPOSED PROCESS BLDG #3

WITH DOUBLE REINF TIE $d = 16" - 2.5" = 13.5"$

$A_s = \frac{9.67^{IK}}{1.75(13.5")} = 0.41 \text{ IN}^2$ #6 @ 12" $A = 0.44 \text{ IN}^2$

USE #6 @ 12"

& WWF 6×6 - W2.9×W2.9
T & BOTT

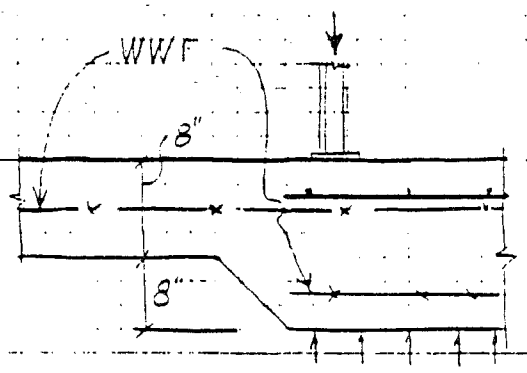

TANK 3,000 GAL FOOTING

REFER TO SHTS 27-29 OF THESE CALCS. (FOR 5000 GAL. TANK

USE SKETCH ON SHT 29

HOYER-SCHLESINGER-TURNER, INC.

SHEET 35 OF 41
PROJECT NO. 1745
DATE 11/15/91
BY JMS

PROJECT CLEAN HARBOR CHICAGO IL

SUBJECT PROPOSED BUILDING # 3

PRELIMINARY FOUNDATION DESIGN FOR PREENGINEERED BLDG

REF. TO SHTS 9-11 OF THESE CALCS.

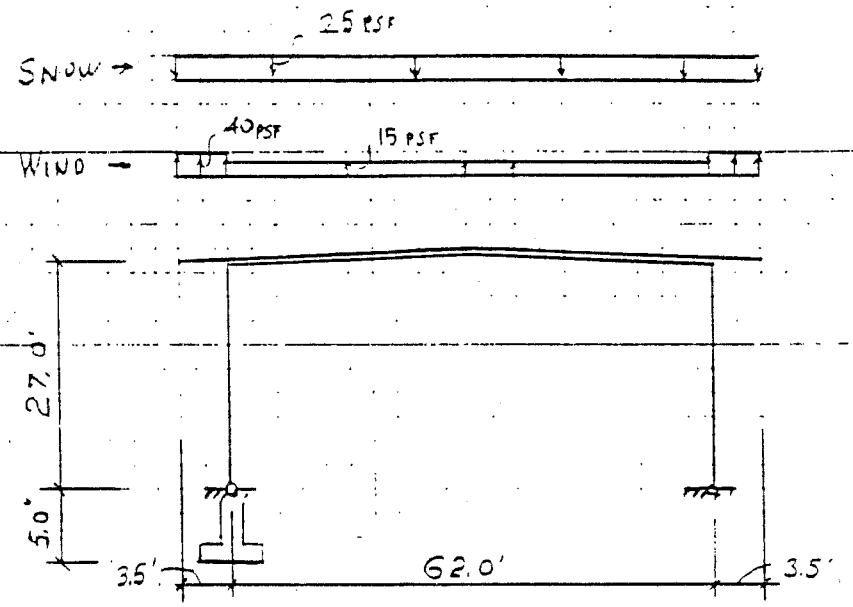

FRAME SPACING 25'

REF. TO SHT 10

TOTAL VERT. LOAD ON FRAME FOOTING IS

$35\,PSF \times (3.5' + 31.0') \times 25.0'_{SPACING} = 30.2^K$

TOTAL HORIZ. LOAD

$20\,PSF \times 27.0'_{HT.} \times 25.0'_{SPACE} = 13.5^K$, OR $\frac{13.5^K}{2} = 6.8^K$ PER 1 C

ASSUME 5.0' × 6.0' FTG.

HOYER-SCHLESINGER-TURNER, INC.

SHEET 35 OF 41
PROJECT NO. 1785
DATE 1/15/91
BY JMS

PROJECT CLEAN HARBOR CHICAGO IL

SUBJECT PROPOSED BUILDING #3

FOUNDAT VERT. LOAD = 32.2^k + 5.0' × 6.0' (4.0' DEPTH) × 0.12 · CONC = 44.6^k

FOUND HORIZ. LOAD = 6.8^k, MOMENT M = 6.8^k × 5.0' FTG HT = 34.0$^{'k}$

$e = \frac{34.0'^k}{44.6^k} = 0.76'$

$q = \frac{Q}{A}\left(1 \pm 6\frac{e}{B}\right) = \frac{44.6^k}{5.0' \times 6.0}\left(1 \pm 6\frac{0.17'}{6'}\right) = 1.74$ KSF > 1.50 N.G.

USING 1/3 STRESS INCREASE FOR COMBINED STRESS (CITY OF CHICAGO BUILDING CODE 68-4.7):

1.74 KSF × 0.75 = 1.30 < 1.50 KSF ALLOWED SOIL PRESSURE

USE 5' × 6' FTG. 12" THK WITH #5 @ 12" E. WAY

2' × 2' PIER WITH 4 – #5 DOWELS & #4 @ 12" TIES

HOYER-SCHLESINGER-TURNER, INC.

SHEET 37 OF 41
PROJECT NO. 1793
DATE 11/16/91
BY INS

PROJECT CLEAN HARBORS CHICAGO IL

SUBJECT EXISTING PROCESS BUILDING #1

CONTAINMENT CALCULATIONS

MAXIMUM TANK HAS 12,000 GAL CAPACITY.

CHECK CONTAINMENT OF 15' × 20' EXIST. SLUDGE PIT.

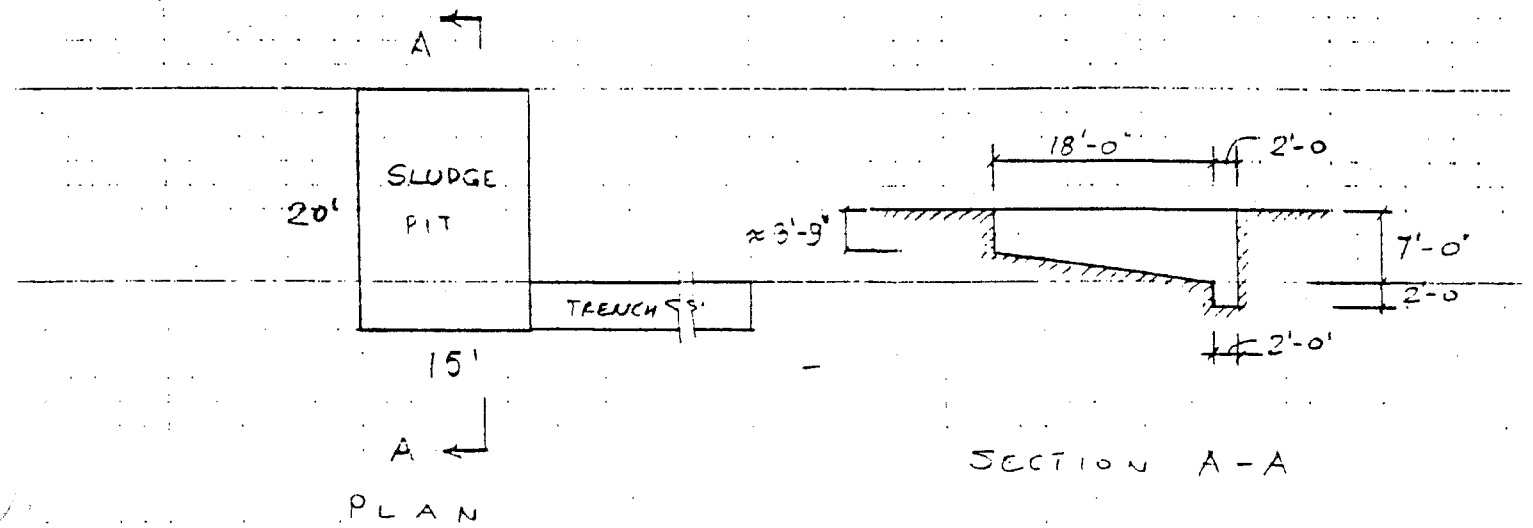

CONTAINMENT VOLUME OF THE PIT IS

$$\left[\frac{1}{2}(3.75' + 7.0')18' - 9.0' \times 2.0'\right] \times 15' = 1721.25 \text{ CUF} \quad \text{OR}$$

$$1721.25 \times 7.5 = 12909 \text{ GAL}$$

THE PIT VOLUME IS 12909 GAL > 12,000 GAL TANK VOLUME,

∴ NO NEED TO CALCULATE TRENCH VOLUME OR, MOREOVER, FLOOR SLAB & CURB VOLUME.

SAY: O.K.

HOYER-SCHLESINGER-TURNER, INC.

PROJECT: CLEAN HARBORS CHICAGO IL

SUBJECT: EXISTING PROCESS BUILDING #1

SHEET 33 OF 41
PROJECT NO. 1785
DATE 11/6/91
BY JNS

FOUNDATION DESIGN FOR 12,000 GAL. TANK (#111)

EXIST. FLOOR SLAB. REF. TO R.A. MORLEY CO. INC. DWG.

DWG A7 PROJECT # 1902 OF 9/2/80 SHOWS:

6" CONC. FLOOR, 6 × 6 × N° 6 WWF

MOST LIKELY IT MEANS:

6" CONCRETE SLAB WITH WWF 6×6 – 6×6 IN CENTER OF SLAB

NEW DESIGNATION IS WWF 6×6 – W2.9 × W2.9

REF. TO SHT 33 OF THESE CALCS

MAX. FACTORED LOAD PER 1 LEG OF 12,000 GAL TANK

IS $66.7^k \times \frac{3}{4} = 50.0^k$ (66.7" – 3 LEGS WERE ASSUMED CONSERVATIVELY.

∴ 6" EFFECTIVE DEPTH IS ADEQUATE

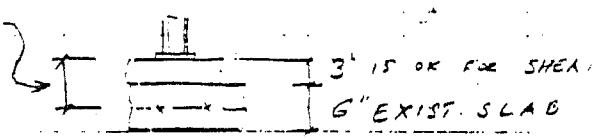

FOR FLEXURE BENDING WE ARE NOT TAKING IN ACCOUNT EXIST. SLAB ∵ NEW & EXIST. SLAB WILL WORK SEPARATELY.. (THIS IS CONSERVATIVE APPROACH)

THE SIZE OF THE PAD TAKE 12' × 12'

HOYER-SCHLESINGER-TURNER, INC.

SHEET 39 OF 4
PROJECT NO. 178
DATE 11/17/91
BY INS

PROJECT CLEAN HARBORS, CHICAGO IL
SUBJECT EXISTING PROCESS BUILDING #1

ASSUME 8" THICK PAD ON TOP OF EXIST. SLAB

FROM SHT. 33 SOIL PRESSURE WITHOUT SLAB WT IS 0.99 K/SF

CHECK SOIL CAPACITY: $0.99\,KSF + (0.5' + 0.67')\,0.15 = 1.17\,KSF < 1.5$ OK
(EXIST SLAB, PAD)

USE PRESSURE OF 0.99 K/SF FOR SLAB DESIGN.

REF. TO SHT. 33 $M = 9.67'^{K}$

$d = 8" - 1.25" = 6.75"$ $A_s = \frac{9.67'^{K}}{1.75(6.75")} = 0.82\ IN^2$

#8 @ 12" $A = 0.79 < 0.82\ IN^2$ DIFFERENCE IS 3.8%

SAY OK, MOREOVER WE NEGLECTED EXIST. SLAB CONSERVATIVELY.

USE PAD 8' THICK ON TOP OF EXIST. SLAB WITH
TOP REINF. #8 @ 12", BOTT. REINF WWF 6×6 - W2.9×W2.9

TO CONTROL CRACKING SAW CUT THE EXIST. SLAB
1.0' OFF THE PAD ALL AROUND AND FILL WITH ELASTIC
SEALANT

SIMILAR PROCEDURE WILL FOLLOW FOR FOOTING
FOR 8000 GAL FRR REACTOR VESSEL. (TANK #118)

THE SIZE OF THE PAD TAKE 9.0' × 9.0'. ASSUME 6" THK

REF. TO SHT. 28

"PUNCHING" SHEAR & SOIL PRESSURE ARE OK BY INSPECTION

HOYER-SCHLESINGER-TURNER, INC.

SHEET 40 OF 41
PROJECT NO. 178
DATE 1/17/91
BY JNS

PROJECT CLEAN HARBORS CHICAGO, IL

SUBJECT EXIST. PROCESS BUILDING #1

FROM SHT. 33 FLEXURAL MOMENT IN 3.0'SQ PAD

IS 4.0'K. $d = 6" - 1.25" = 4.75"$

$A_s = \frac{4.0'^k}{1.75(4.75")} = 0.48 \text{ IN}^2$ = 7 @ 12" A = 0.60 < 0.48

USE 8" PAD ON TOP OF EXIST. SLAB WITH TOP REINF. # 7 @ 12

AND SAWCUT THE EXIST. SLAB ALL AROUND NEW PAD 1.0' OFF

PROJECT CLEAN HARBORS CHICAGO IL

SUBJECT EXIST DRUM STORAGE BUILDING No 2

EXIST. FLOOR SLAB STRUCTURAL INTEGRITY CHECK

REF. TO DWG A-1 OF 3 BY SCHECK CONSTRUCT. CO.
EXIST. FLOOR SLAB IS

6" CONC. SLAB W/ 6×6 – #6 WWF REINF.
6" COMPACTED GRANULAR FILL, OR, USING NEW DESIGNATION
WWF 6×6 – W2.9 × W2.9

FROM DWG No. 4209 (2916-S-02) BY CLEAN HARBORS
WE CAN FIND MAX. LOAD FROM STORAGE DRUMS.

4.0' SQ. PALLET AREA SUPPORTS 8 DRUMS

8 DRUMS × (55 GAL. × 1.5 SP. GRAV × 8.36 LB/GAL + 50 LB SELF WT) = 5918 LB,

SAY 6.0 K / 16 SF = 0.38 KSF

ASSUME CONSERVATIVELY THE WHOLE LOAD OF 6.0 K WILL BE APPLIED IN ONE SMALL AREA LIKE ONE CORNER OF A PALLET.

REF TO SHT 21 OF THESE CALCS, WE CAN SEE THAT LIFT TRUCK LOAD IS MORE CONSERVATIVE (25.0 K AXLE LOAD WITH SINGLE WHEEL AXLE)

SAY EXIST. FLOOR SLAB 6" THK WITH WWF 6×6–W2.9×W
IS STRUCTURALLY SOUND.

SAY OK

HOYER-SCHLESINGER-TURNER, INC.

SHEET 1 OF 2
PROJECT NO. 1785
DATE 6/6/91
BY C.K.

PROJECT CLEAN HARBORS, CHICAGO, ILL.

SUBJECT CHECK EXIST. BUILDING #2 FOUNDATIONS

RIGID FRAME BLDG. 27' HIGH, SINGLE SLOPE, 22.5' W. B
MAIN FRAME LOADS: BASED ON 30 PSF L.L., 20 PSF W.

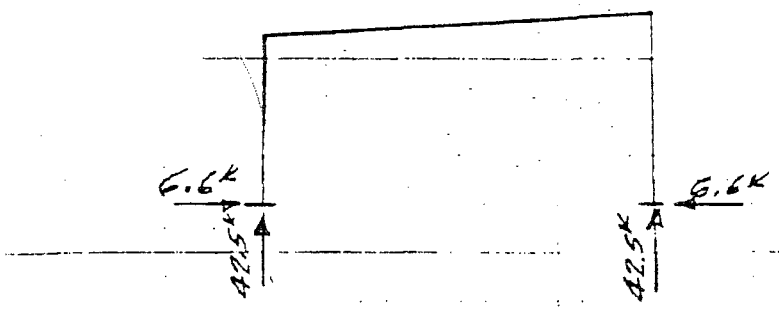

D.L. + L.L.

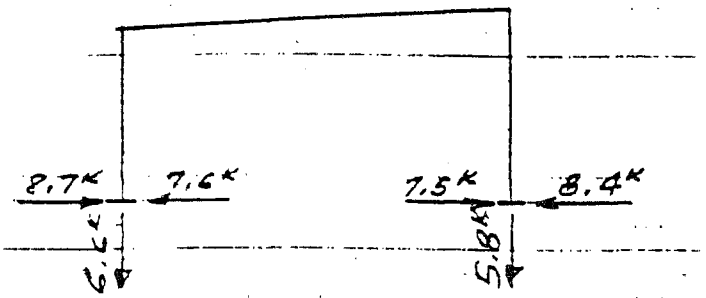

D.L. + W.L. (MAX)

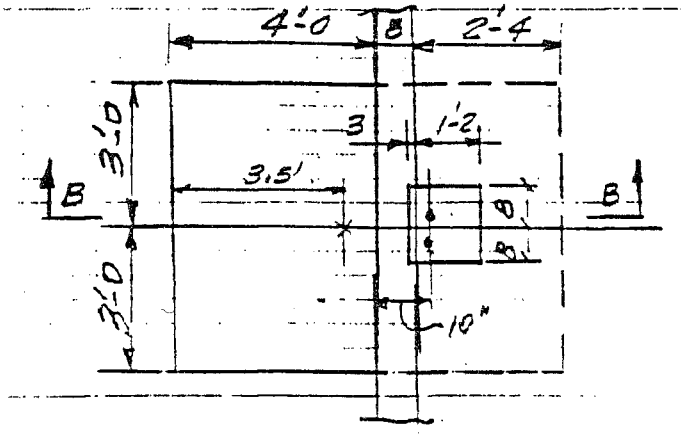

PLAN - DET. B
EXIST. DWG. A-1

SOIL: 2000 PSF
CONC. 3000 PSI.

FTG. 6'x7'x1.17'x.05 = 2.5'
GRADE BM. .67x22.5(.6+.15) = 11.3
PIER 1.17x1.33x3x.05 = .2
14.0

$M = 6.6^K \times 4.17' = 27.5^{'K}$

G.G. FDN.

2.5 x 3.5	=	8.75
11.3 x 4.33	=	48.93
.2 x 4.83	=	.97
14.0		58.65

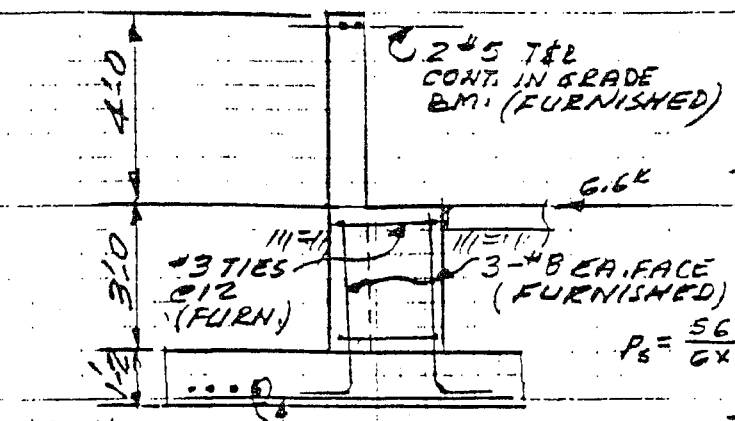

SECTION B-B

$e = \frac{58.65}{14} - 3.5' = .7'$

$P_s = \frac{56.5}{6\times7} + \frac{14\times.7\times6}{6\times7\times7} + \frac{42.5\times1.33\times6}{6\times7\times7} - \frac{27.5}{6\times7}$

$= 1.35 + .2 + 1.15 - .56 = +1.96 < 2.0$

PIER: $\frac{19.8}{1.76\times20} = .56^{\square''} - 2\text{-}\#8$

REINF. $M = \frac{2\times4^2}{2} = 16^{'K}$

$A_s \text{ reqd} = \frac{16}{1.76\times11} = .83^{\square''}$ #6 @ 6 EA.

SHEAR: 48#/SQ. INCH O.K.

PROVIDED #6 @ 4½" EA. WAY

HOYER-SCHLESINGER-TURNER, INC.

SHEET 2 OF 2
PROJECT NO. 1785
DATE 6/6/91
BY E.K.

PROJECT CLEAN HARBORS, CHICAGO, ILL.

SUBJECT CHECK EXIST. BLDG. #2 FOUNDATION

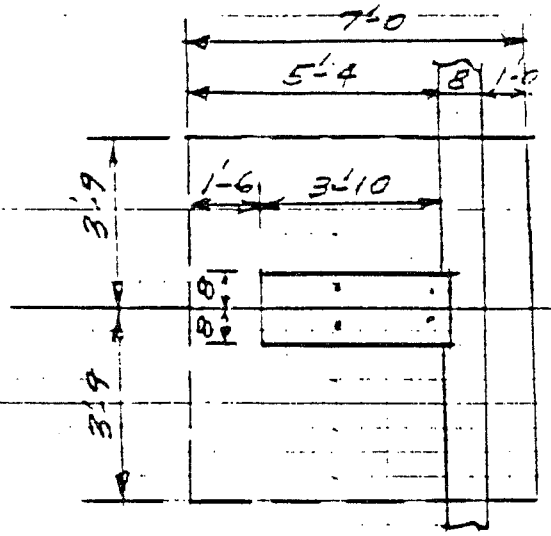

PLAN - DET. D
EXIST. DWG. A-1

MAIN BLDG. COL. LOAD IS 42.5
THE SAME AS SHOWN ON SHEE
ON THIS SIDE OF BLDG. AN EX.
WIND COL. ADDED.
FOOTING SIZE IS O.K. BY
INSPECTION, FOOTING REINFO
WITH #6 @ 4½" O.C. EACH WAY
TOP & BOTTOM.
PIER REINF. 3-#8 EA. FAC
WITH #3 TIES @12.
GRADE BEAM EXTENDS 2'-0
ONLY ABOVE PIER ELEVA

FAIL THICKNESS CALCULATIONS

Using formula

Fail Thickness = (H*(D/2)*Density*(1/12))/Yield Stress
H = height in ft
D = diameter in feet
Yield Stress = 30000 lb/sq.in
Density = 62.4lb/cu.ft * specific gravity

ITEM	TANK	HEIGHT	DIAMETER	SPECIFIC GRAVITY	YIELD STRESS	FAIL THICKNESS	MINIMUM THICKNESS
101	SLUDGE COND.	20	10	1.25	30000	0.0217	0.0542
121	STORAGE TANK	15	12	1.25	30000	0.0195	0.0488
138	WASTE COLL.	11	8	1.20	30000	0.0092	0.0229
142	SLUDGE COND.	10	8	1.25	30000	0.0087	0.0217
150	BACK WASH	6	6	1.05	30000	0.0033	0.0082
152	CARBON ADORPT.	9	5	1.25	30000	0.0049	0.0122
153	TREATED EFF.	7	8	1.05	30000	0.0051	0.0127
155	EFFLUENT STOR.	15	12	1.05	30000	0.0164	0.0410
158	STORAGE	15	12	1.20	30000	0.0187	0.0468
159	STORAGE	15	15	1.20	30000	0.0234	0.0585
161	BLENDING	15	9	1.20	30000	0.0140	0.0351
161-21	DISPERSION	5	6	1.75	30000	0.0046	0.0114
161-22	OVERFLOW	7.5	2.5	1.75	30000	0.0028	0.0071

Minimal thickness is calculated from Fail thickness using Safety factor of 2.5 as required by City of Chicago code. Minimal thickness value for all tanks is below required shell thickness of 3/16" (API 650 and City of Chicago code). So, all tanks listed above shall have shell constructed from 3/16" thick steel with exception of Item #149 Sand Filter which shall have minimal shell thickness 3/32".

HOYER-SCHLESINGER-TURNER, INC.

SHEET 2 OF 4
PROJECT NO. 178
DATE 3-11-93
BY M.V.

PROJECT CLEAN HARBORS - PART B

SUBJECT MIN. WALL REQUIRED THICKNESS

Item # 111 - Reactor Vessel
Item # 123 - Reactor Vessel

From ASTM D-3299-81, paragraph 6.1.4

"The minimum required wall thickness of the total tank shall be determined as follows:

$t = (0.036)(sp.gr.)(H)(D)/(2)(S_H)$ and $S_H = (E_T)(Z)$"

where

t = tank side wall thickness (inches)

H = fluid head (inches) of the contained fluid = tank straight side length = 192 inches

sp. gr. = specific gravity of the contained fluid = 1.3

D = inside diameter of tank (inches) = 144 inches

S_H = maximum allowable hoop stress (psi)

E_T = hoop tensile modulus of the total laminate (psi) = $2.61(10)^6$ psi at 70° F.

Z = allowable strain (inch/inch) = 0.001 in./in. at 70° F. (from [1], para 6.1.2).

$$t = \frac{0.036 \times 1.3 \times 192 \times 144}{2 \times 2.61 \times 10^6 \times 1 \times 10^{-3}} = 0.25 \text{ inches} = 1/4''$$

Add 2.5 safety factor => 0.62 inches

Bottom shell shall be 0.62" thick for height of 2" min and shall tapper with tank height to min. thickness of 0.18"

HOYER-SCHLESINGER-TURNER, INC.

SHEET 3 OF 4

PROJECT CLEAN HARBORS - PART B

PROJECT NO. 178

SUBJECT MIN. WALL REQUIRED THICKNESS

DATE 3-11-9

BY M.V.

Item #118

From ASTM D-3299-81, paragraph 6.1.4

"The minimum required wall thickness of the total tank shall be determined as follows:

$t = (0.036)(sp.gr.)(H)(D)/(2)(S_H)$ and $S_H = (E_T)(Z)$"

where

t = tank side wall thickness (inches)

H = fluid head (inches) of the contained fluid = tank straight side length = 180 inches

sp. gr. = specific gravity of the contained fluid = 1.3

D = inside diameter of tank (inches) = 120 inches

S_H = maximum allowable hoop stress (psi)

E_T = hoop tensile modulus of the total laminate (psi) = $2.61(10)^6$ psi at 70° F.

Z = allowable strain (inch/inch) = 0.001 in./in. at 70° F. (from [1], para 6.1.2).

$$t = \frac{0.036 \times 1.3 \times 180 \times 120}{2 \times 2.61 \times 10^6 \times 1 \times 10^{-3}} = 0.194 \text{ inches}$$

Using 2.5 safety factor => 0.484 inches

Bottom shell shall be 0.484" thick for heig of 2" min and shall tapper with tank height to min. thickness of 0.18"

HOYER-SCHLESINGER-TURNER, INC.

SHEET 2 OF 4
PROJECT NO. 1785
DATE 3-12-93
BY M.V.

PROJECT CLEAN HARBORS - PART B

SUBJECT MIN. WALL REQUIRED THICKNESS
Item # 149 - SAND FILTER

$$\text{Fail Thickness} = \frac{H \times \frac{D}{2} \times \text{Density} \times \frac{1}{12}}{\text{yield stress}}$$

H = height in ft. = 8
D = diameter in ft. = 4
Density = see below
Yield stress = 30,000 PSI

Density:
Assume: - weight of liquid-sand mixture = 120 lb/ft
- sp. gravity of grains = 2.70

$2.7 \times 62.4 = 169$ lb/ft^3 = Theoretical weight of sand
% of solid material = 120/169 = 71%
% of liquid = 1.0 - 0.71 = 29%
$0.71 \times 169 + 0.29 \times 62.4 \times 1.25 = \underline{143 \text{ lb/ft}^3}$

$$\text{Fail thickness} = \frac{8 \times \frac{4}{2} \times 143 \times \frac{1}{12}}{30{,}000} = \underline{\underline{0.0064 \text{ inche}}}$$

Apply 2.5 Safety Factor =
$0.0064 \times 2.5 = 0.016 = 1/64''$ => USE 3/16" TK

PROJECT CLEAN HARBORS - PART B

SUBJECT "RECTANGULAR TANK" - WALL CALCULATIONS

ITEM #137 LAMELLA CLARIFIER

SHEET 1 OF 2
PROJECT NO. 1785
DATE 3-15-93
BY P. BESLIC

MAX. SPECIFIC GRAVITY, S = 1.2

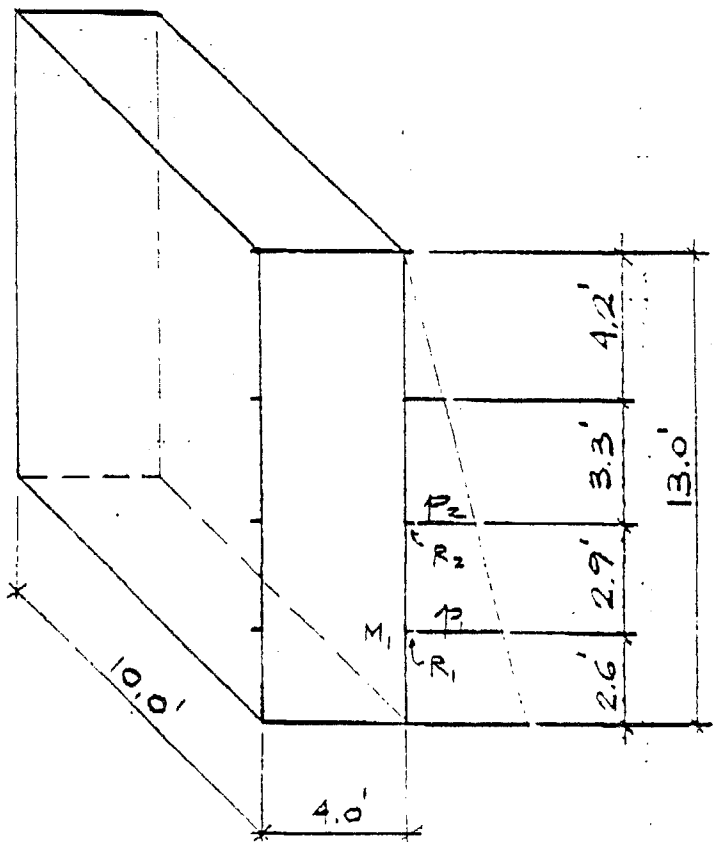

$h_1 = 1.11(3.78) = 4.2'$

$h_2 = 0.88(\ \ ) = 3.3'$

$h_3 = 0.77(\ \ ) = 2.9'$

$h_4 = 0.7(\ \ ) = 2.6'$

$P_1 = 0.4336(10.4')1.2 = 5.41$ PSI

$M_1 = 0.107(5.41)\left(\frac{2.9' + 2.6'}{2} \times 12\right)^2 = 630$ IN-LB

$\sigma = \frac{630 \times 6}{0.4375^2} = 19{,}749$ PSI $< 20{,}000$ PSI OK.

7/16"

$R_1 = 5.41 \times 144 \times \frac{2.9' + 2.6'}{2} = 2142$ #/1

$M = 2.142 \times \frac{10^2}{8} = 26.78$ IK

$S = \frac{26.78 \times 12}{24} = 13.39\ IN^3 < 13.5\ IN^3$ (C10×15.3)

$\Delta = \frac{5 \times 2.142\ (10)^4\ 1728}{384 \times 30{,}000 \times 67.4\ IN^4} = 0.24''$

HOYER-SCHLESINGER-TURNER, INC.

SHEET 2 OF 2
PROJECT NO. 1785
DATE 3-15-93
BY P. BESLIC

PROJECT CLEAN HARBORS - PART B

SUBJECT "RECTANGULAR TANK"-WALL CALCULATIONS

ITEM #137 LAMELLA CLARIFIER

$P_2 = 0.4336\,(7.5')\,1.2 = 3.902$ PSI

$R_2 = 3.902 \times 144 \times \frac{3.3' + 2.9'}{2} = 1742$ #/1

$M = 1.742 \times \frac{10^2}{8} = 21.78$ IK

$S = \frac{21.78 \times 12}{24} = 10.89\ IN^3 < 13.5\ IN^3$

$M = 2.142\ \frac{4^2}{8} = 4.284$ IK ; $S = \frac{4.284 \times 12}{24} = 2.14\ IN^3 < 3.00\ IN^3\ (C5 \times 6.7)$

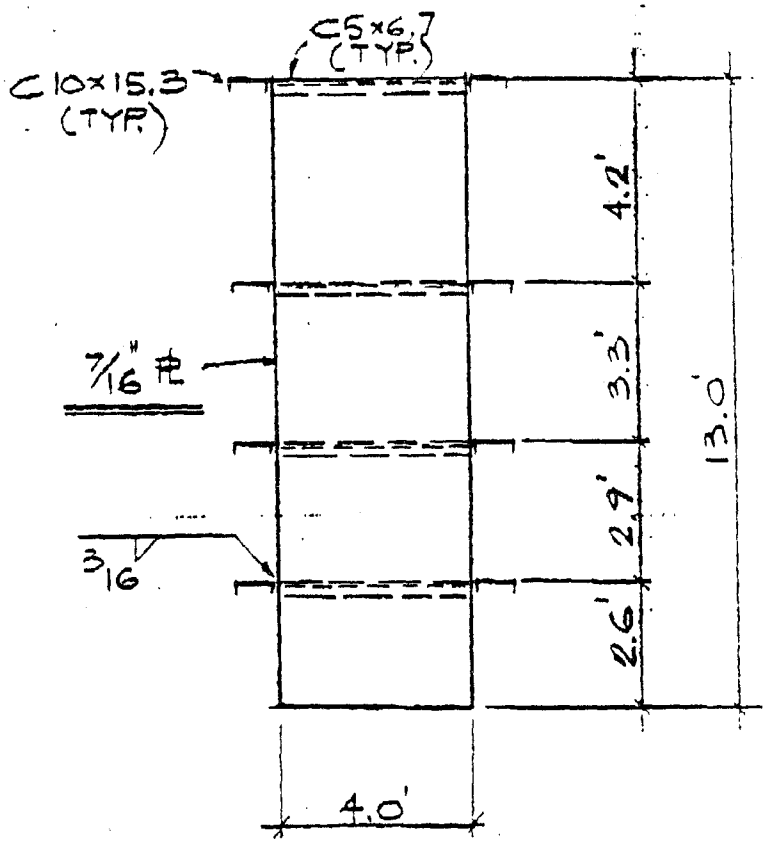

SECTION

APPENDIX D-29

STRUCTURAL DESIGN AND SECONDARY CONTAINMENT CALCULATIONS FOR PROPOSED/MODIFIED TANK SYSTEM

HOYER-SCHLESINGER-TURNER inc.
ENGINEERS - CONSTRUCTORS
300 west adams street chicago illinois 60606 telephone 263-0556 area code 312

July 21, 1994

Permit Section, RCRA Unit
Division of Land Pollution Control
Illinois Environmental Protection Agency
PO Box 19276
Springfield, Illinois 62794-9276

Re: Clean Harbors of Chicago, Inc.
11800 South Stony Island Avenue
Chicago, Illinois 60617
Revised Part-B Permit Application
Modified Flammable Storage Tank Farm

Dear Sir or Madam:

Please refer to: 0316000051–Cook County
Clean Harbors of Chicago
ILD000608471
RCRA Permit Log No. 16

I hereby certify that I, the undersigned am a licensed Structural Engineer, licensed to practice in the State of Illinois. I certify under penalty of law that I reviewed the design of the Modified Storage Tank Farm.

All calculations for containment of flammable liquids Class I or for hazardous liquids are shown on dwg. 5404-S-04, CHCI dwg. no. 4215.

Respectfully submitted,

HOYER-SCHLESINGER-TURNER, INC.

Peter J. Bernes

PETER J. BERNES
LICENSED STRUCTURAL ENGINEER
ILLINOIS NO. 3659
MY LICENSE EXPIRES ON 11-30-94

STATE OF ILLINOIS
PETER J.
BERNES
3659
LICENSED STRUCTURAL ENGINEER

HOYER-SCHLESINGER-TURNER, INC.

PROJECT CLEAN HARBORS CHICAGO IL

SUBJECT EXIST. TANK FARM CONTAINMENT DIKES

SHEET 1 OF 10
PROJECT NO. 1785
DATE 7/5/94
BY I. N. SONKIN
Rev. △1 1-19-95

RE: CITY OF CHICAGO BUILDING CODE 1993/94

FROM 15-24-170 FOR ABOVE GROUND TANKS WITH FLAMMABLE LIQUIDS, CONSERVATIVELY ASSUMING CLASS I, EACH INDIVIDUAL DIKE SHALL HAVE MIN. CAPACITY OF 1¼ TIMES THE CAPACITY OF THE TANK IT SURROUNDS.

△1 OPERATING CAPACITY:

△1 THE TANK FARM WILL HAVE 9 - 12,100 GAL TANKS, TOTAL 108,900 GAL

△1 AND 1 - 19,600 GAL TANK TOTAL → 19,600 GAL

△1 128,500 GAL

WHICH IS LESS THAN 750,000 GAL. ALLOWED BY THE CODE FOR TOTAL CAPACITY OF TANKS IN ANY STORAGE YARD FOR CLASS I AND II FLAMMABLE LIQUID

△1 THE 19,600 GAL. CAPACITY TANK CAN NOT BE USED FOR CLASS I FLAMMABLE LIQUID ∴ MAX. ALLOWED CAPACITY IS 15,000 GAL. THE TANK WILL BE USED FOR CLASS II & III LIQUID

FROM 15-28-150 FOR ABOVE GROUND TANKS WITH HAZARDOUS CHEMICALS TANKS SHALL BE DIKED.

DIKE SHALL HAVE MIN. CAPACITY 1½ TIMES THE COMBINED CAPACITY OF THE TANKS SURROUNDED, WHICH IS

△1 1.5 × 128,500 GAL = 192,7500 GAL OR 192,750 ÷ 7.481 = 25,769 CU. FT

STATE OF ILLINOIS
PETER J. BERNES
3659
LICENSED STRUCTURAL ENGINEER

Peter J. Bernes
PETER J. BERNES
LICENSED STRUCTURAL ENGINEER
ILLINOIS NO. 3659
MY LICENSE EXPIRES ON 11.30.94

HOYER-SCHLESINGER-TURNER, INC.

PROJECT CLEAN HARBORS CHICAGO IL

SUBJECT EXIST. TANK FARM

SHEET 2 OF 10
PROJECT NO. 1785
DATE 7/7/94
BY T. N.S.

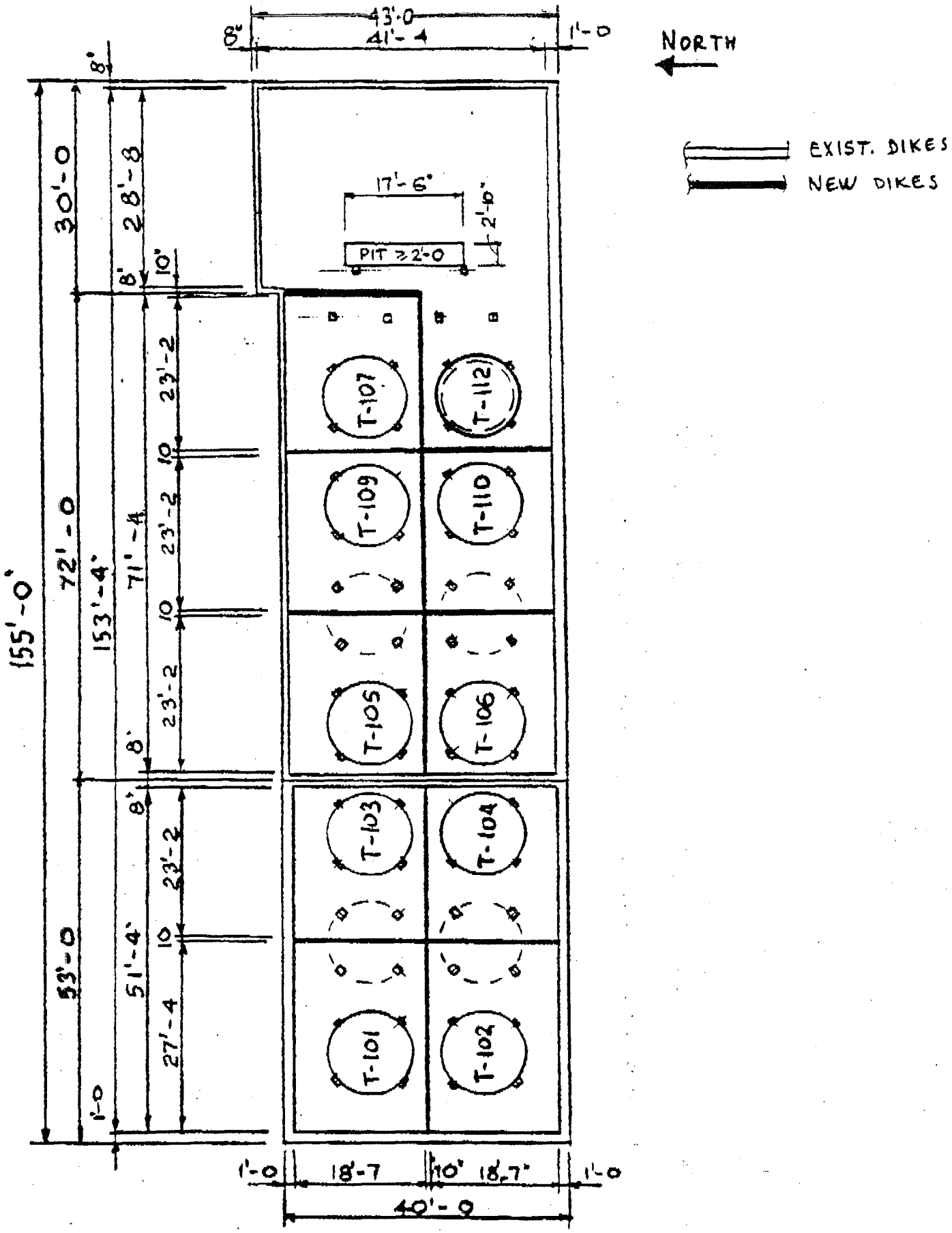

HOYER-SCHLESINGER-TURNER, INC.

PROJECT CLEAN HARBORS CHICAGO IL

SUBJECT EXIST. TANK FARM

SHEET 3 OF 10
PROJECT NO. 1785
DATE 7/5/94
BY I.N.S.
Rev. 1 1-19-95

THE 9 TANKS - T-101 THRU T-107 & T-109, T-110 ARE
1 12,100 GAL TANKS ON 7'-0" HIGH LEGS MADE OF W8 SHAPE.
THE TANKS CAN BE USED FOR FLAMMABLE AND/OR HAZARDOUS LIQUIDS AND REQUIRE INDIVIDUAL DIKES.

1 THE TANK T-112 IS 19,600 GAL. TANK AND WILL BE USED FOR CLASS II OR III LIQUIDS.
THE T-112 IS SUPPORTED BY 7'-0" HIGH LEGS MADE OF W8 SHAPE

MAX. SIZE OF A PIERS SUPPOTING TANK COLUMNS OR PLATFORM IS 16" SQUARE × 18" HIGH (CONSERVATIVE).

CONTAINMENT CALCULATIONS.

1 MIN. CONT. AREA FOR 12,100 GAL TANKS IS

18.58' × 23.17' = 430.5 S.F.

MIN. EXIST. DIKE HT IS 5'-0" (CONSERV.) TRY SUBDIKE HT. = 4'-11½"

TO SUPPORT NEW DIKES 3½" SLAB SHALL BE POURED ON THE TOP OF THE EXIST. SLAB.

1 ∴ MIN. DIKE HT. BECOMES 4'-9" (CONSERVATIVE)

1 TOTAL CONT. VOLUME $V = 430.5 \text{ SF} \times 4.75' = 2045 \text{ CU.F.}$

1 1 TANK VOLUME = 12,100 GAL ÷ 7.481 = 1617 CU. F.

1 DISPLACEMENT VOLUME:

1 (COL. W8×28) $4 \times \frac{12^2 \text{ IN}^2}{144} \times 4.75 =$ 19 C.F (COLUMNS)

1 V_D = 19 CU. F.

AVAILABLE VOLUME

1 $V_A = V - V_D = 2045 - 19 = 2026 \text{ CU.F.}$

REQUIRED VOLUME FOR FLAMMABLES CLASS I

1 $V_R = 1.25 \times 1617 \text{ CU.F} = 2,021 \text{ CU.F.} \approx 2026 \text{ CU.F.}$

SAY OK ∴ ACTUAL HT. OF EXIST. DIKE MEASURED IS ≈ 5'-3½" (NOT 5'-0")

OK FOR FLAMMABLE LIQUIDS.

NOW CHECK THE COMBINED TANK FARM CAPACITY FOR HAZARDOUS CHEMICAL, ASSUMING THAT ALL THE TANKS CONTAIN HAZARDOUS LIQUIDS.

FROM SHT. 1 (BOTT.) REQUIRED COMBINED CAPACITY (VOLUME FOR HAZARDOUS LIQUIDS

△ $V_R = 25{,}769$ CU.FT.

FIND COMBINED VOLUME AVAILABLE V_A.

TOTAL CONTAINMENT AREA

$A = 2 \times 18.58' \times 27.33' + 7 \times 18.58' \times 23.17' + 28.67' \times 41.33' + 24.0' \times 18.67' = 5{,}662$ S.F.

△ TOTAL VOLUME $= 5{,}662$ S.F. $\times 4.75' = 26{,}895$ CU.F.
ADDTL. PIT VOLUME $= 17.5' \times 2.83' \times 2.0' = 99$ CU.F.

△ $V = 26{,}994$ CU.F.

DISPLACEMENT VOLUME:

△ COLUMNS : 10×19 CF. $= 190$ CU.F.
△ MISC. PUMP PADS, ETC. $- 56$ CU.F. (CONSERV.)

$V_D = 246$ CU.F.

AVAILABLE VOLUME

△ $V_A = V - V_D = 26{,}994$ CU.F. $- 246$ CU.F. $= 26{,}748$ CU.F.

△ $V_A = 26{,}748$ CU.F. $> V_{REQ.} = 25{,}769$ CU.FT

∴ OK FOR HAZARDOUS LIQUIDS.

HOYER-SCHLESINGER-TURNER, INC.

SHEET 5 OF 10
PROJECT NO. 1785-1
DATE 7/6/94
BY INS

PROJECT CLEAN HARBORS CHICAGO IL
SUBJECT EXIST. TANK FARM CONTAINMENT

NEW ADDTL. DIKES (SUBDIKES) ANALYSIS

FROM SHT. 3 THE SUBDIKE HT. IS 4.67', SAY 4.80' CONSERV.

MAX. SPECIFIC GRAVITY = 1.50

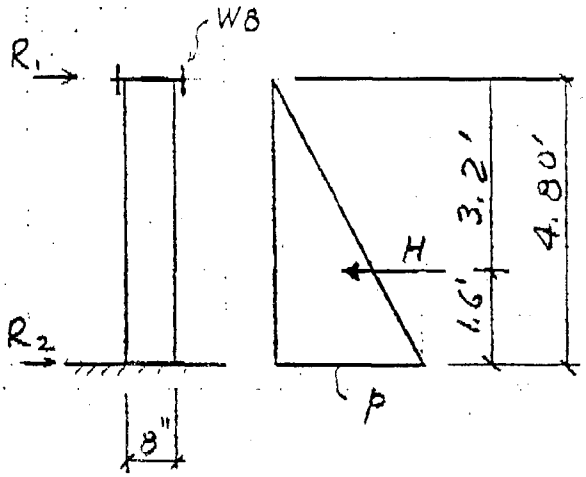

$p = 4.80' \times 1.50 \times 62.427_{pcf} = 450_{PLF}$

$H = 450_{PLF} \times 4.80' \div 2 = 1.08^K$

ASSUME THE DIKE AS A BEAM 4.8' SPAN, 1.0' WIDE, SIMPLE SUPPORTED (CONSERVATIVE).

$M_{MAX} = 0.1283\ W \cdot l$ (AISC-9, p. 2-296)

$W = H = 1.08^K$; $l = 4.8'$

$M = 0.1283 \times 1.08^K \times 4.8' = 0.665^{'K}$ (@ $0.5774\ l = 2.77'$ FROM TOP)

$R_1 = W/3 = 1.08/3 = 0.36^K$

$R_2 = 2W/3 = 2.16/3 = 0.72^K$

VERTICAL REINF. (ACI 318-89 APPENDIX A)

$A_s = \frac{M'^K}{1.77d} = \frac{0.665^{'K}}{1.77(10'-2")} = 0.047\ in^2$ / L.F. OF DIKE WALL

TRY #4 @ 18" $A = 0.20 \times \frac{12}{18} = 0.133\ in^2 > 0.047\ in^2$

MIN. VERT. REINF. $= 0.0012 \times 10" \times 12" = 0.144\ in^2 < 2 \times 0.133 = 0.266\ in^2$ OK

USE #4 @ 18" VERT. REINF. EA. FACE

MIN. HOR. REINF. $= 0.0020 \times 10" \times 12" = 0.24\ in^2 < 0.266\ in^2$ OK

USE #4 @ 18" HORIZ. REINF. EA. FACE

HOYER-SCHLESINGER-TURNER, INC.

PROJECT CLEAN HARBORS CHICAGO IL

SUBJECT EXIST. TANK FARM

SHEET 6 OF 10
PROJECT NO. 1785-1
DATE 7/12/94
BY INS

CHECK HORIZONTAL BEAM SUPPORTING TOP OF THE NEW DIKE.

MAX. BEAM CLEAR SPAN IS 27.33'

FROM SHT. 5 LATERAL BEAM LOAD IS 0.36 K/L.F.

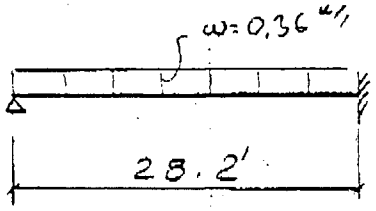

FROM AISC-9 p. 2-299

M_{MAX} (SUPPORTS) $= wl^2/8$ $\qquad$ M_{MAX} (SPAN) $= 9/128\, wl^2$

THE MOST ECONOMICAL AND PRACTICAL SOLUTION IS TO USE R. CONCRETE BEAM WITH TOTAL DEPTH EQUAL TO DIKE THICKNESS

FROM ACI 318-89, 8-7 SPAN LENGTH IS

$$l = 27.33' + \frac{10''}{12} = 28.2'$$

$$M_{MAX} = 0.36^{K/'} \times 28.2^2 \div 8 = \underline{35.8}^{'K}$$

FROM TABLE 9.5(a) OF ACI 318-89 MIN. BEAM THICKNESS

$$h = l/18.5 = 28.2' \times 12/18.5 = 18.2'' > 10''$$

∴ DEFLECTION HAS TO BE COMPUTED.

CHECK THE BEAM FOR FLEXURE.

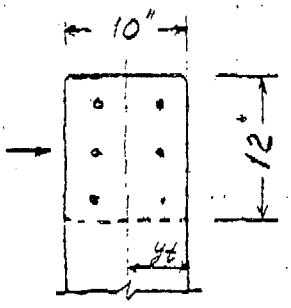

$$A_s = \frac{M^{'K}}{1.77d} = \frac{35.8^{'K}}{1.77(10'' - 2\frac{1}{2}'')} = 2.70\ IN^2$$

TRY 3-#9 EA. FACE, $A = 3 \times 1.00 = 3.00\ IN^2 > 2.70\ IN^2$ OK

USE 3-#9 EACH FACE FOR THE LONGEST E/W DIKE (BOTT. OF SHT. 2,

HOYER-SCHLESINGER-TURNER, INC.

PROJECT CLEAN HARBORS CHICAGO IL

SUBJECT EXIST. TANK FARM

SHEET 7 OF 10
PROJECT NO. 1785-1
DATE 7/13/94
BY I. N. S.

DEFLECTION CHECK.

FROM ACI 318-89 p 96 (9-7)

$$I_e = \left(\frac{M_{cr}}{M_a}\right)^3 I_g + \left[1-\left(\frac{M_{cr}}{M_a}\right)^3\right] I_{cr}$$

$$M_{cr} = \frac{f_r I_g}{y_t}, \qquad f_r = 7.5\sqrt{f_c'} = 7.5\sqrt{4000} = 474.3 \text{ psi}$$

$$I_g = \frac{bh^3}{12} = \frac{12\times 10^3}{12} = 1000 \text{ in}^4, \qquad y_t = \frac{10''}{2} = 5''$$

$$M_{cr} = \frac{474.3 \text{ psi} \times 1000 \text{ in}^4}{5''} = 94.87^{\text{'k}}; \qquad M_a =$$

$$\left(\frac{M_{cr}}{M_a}\right)^3 = \left(\frac{94.87^{\text{'k}}}{35.8^{\text{'k}}}\right)^3 = 18.61$$

TO FIND I_{cr} REF. TO CRSI HANDBOOK pp 6-4 & 12-20

REINF. RATIO $\rho = 2.7 \text{ in}^2 \div (10'' \times 12'') = 0.022$, $I_g = 1000 \text{ in}^4$

FROM TABLE 12-1 $I_t = I_{cr} = 968 \text{ in}^4$

$$I_e = 18.61 \times 1000 \text{ in}^4 + (1-18.61)\,968 = 1564 \text{ in}^4$$

THE DEFLECTION $\Delta_{max} = \dfrac{w\ell^4}{185EI}$ (AISC-9 p 2-299)

$$E = E_c = 57{,}000\sqrt{f_c'} = 57000\sqrt{4000} = 3605 \text{ ksi}$$

$$\Delta = \left[\frac{0.36 \text{ k/'}}{12} \times (28.2' \times 12)^4\right] \div (185 \times 3605 \text{ ksi} \times 1564 \text{ in}^4) = 0.377''$$

FROM ACI COMMENTARY CONSERV. USE $I_e < I_g$ OR $I = 800$

$$\Delta = 0.377\,\frac{1564}{800} = 0.737''; \qquad \frac{0.737''}{12 \times 28.2'} = \frac{1}{459} < \frac{1}{360} \qquad \underline{OK}$$

HOYER-SCHLESINGER-TURNER, INC.

PROJECT CLEAN HARBORS CHICAGO IL

SUBJECT EXIST. TANK FARM

SHEET 8 OF 10
PROJECT NO. 1785-1
DATE 7/13/94
BY IAS

REF. TO SHT. 6

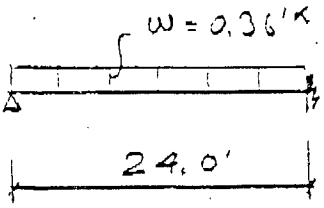

CHECK A SHORTER SPAN BEAM

$\ell = 23.17' + \frac{10''}{12} = 24.0'$

$M = 0.36^{'K} \times 24^2 \div 8 = 25.9^{'K}$

$A_s = \frac{25.9^{'K}}{1.77 \times 7.5''} = 1.95 \text{ IN}^2$ TRY 3 - #8; $A = 3 \times 0.79 = 2.37 > 1.95 \text{ IN}^2$ OK

DEFLECTION IS OK BY INSPECTION OF SHT. 7

USE 3 - #8 EA. FACE FOR 4 E/W DIKES.

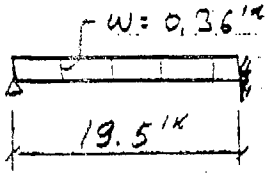

CHECK THE SHORTEST SPAN BEAMS RUNNING N/S

$\ell = 18.67' + \frac{10''}{12} = 19.5'$

$M = 0.36^{'K} \times 19.5^2 \div 8 = 17.1^{'K}$

$A_s = \frac{17.1^{'K}}{1.77 \times 7.5''} = 1.29 \text{ IN}^2$ TRY 3 - #6; $A = 3 \times 0.44 = 1.32 > 1.29 \text{ IN}^2$ OK

DEFLECTION IS OK BY INSPECTION OF SHT. 7

USE 3 - #6 EA. FACE FOR ALL DIKES RUNNING N/S.

HOYER-SCHLESINGER-TURNER, INC.

PROJECT CLEAN HARBORS
SUBJECT EXIST. TANK FARM

SHEET 9 OF 10
PROJECT NO. 1785-1
DATE 7/14/94
BY INS

SOIL / FOUNDATION CHECK

SOIL CAPACITY IS 1,500 PSF

THE EXISTING TANK FARM WAS CONSTRUCTED SUMMER 1982, ABOUT 12 YEAR AGO.

CONSERVATIVELY ASSUME BASE PRESSURE CAPACITY 1,000 PSF

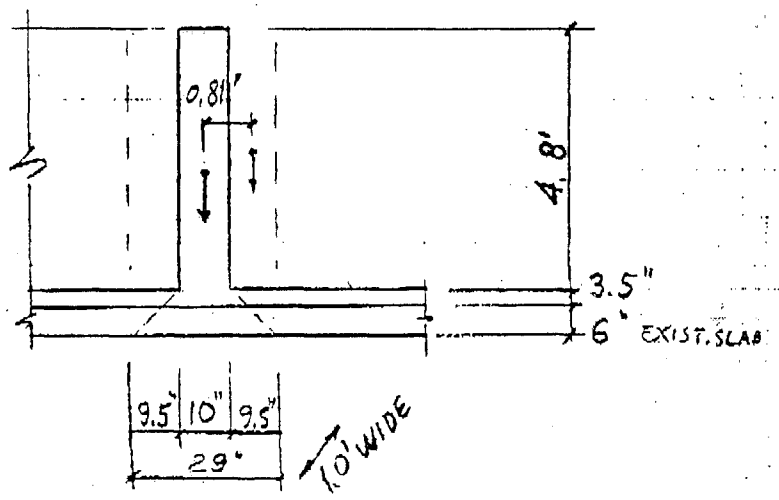

1) ASSUME LIQUID 2 SIDES OF DIKE.

VERT. LOAD $= 2 \times \frac{9.5''}{12} \times 4.8' \times 1.5 \times 62.43\,pcf + \frac{10''}{12} \times 4.8' \times 150\,pcf +$

$+ \frac{9.5''}{12} \times \frac{29''}{12} \times 150 = 1599\# = 1.60^K$

SOIL PRESSURE $q = \frac{1.60^K}{29'' \div 12} = 0.66\,KSF < 1.0\,KSF$ OK

2) ASSUME LIQUID ON 1 SIDE OF DIKE.

VERT. LOAD $= 1599\# - 2 \times \frac{9.5''}{12} \times 4.8' \times 1.5 \times 62.43\,pcf = 887\# = 0.89^K$ (CONCENTRATED APPLIED IN THE MIDDLE)

HOYER-SCHLESINGER-TURNER, INC.

SHEET 10 OF 10
PROJECT NO. 1785-1
DATE 7/14/94
BY I. N. S.

PROJECT CLEAN HARBORS
SUBJECT EXIST. TANK FARM

LIQUID ON ONE SIDE OF THE DIKE

$W_T = 1.5 \times 62.43 \text{ PCF} \times \frac{9.5''}{12} \times 4.8' = 356^{\#} = 0.36^{K}$

$M = 0.36^{K} \times 0.81' = 0.29'^{K}$

FOUND. ECCENTRICITY $e = \frac{0.29'^{K}}{(0.89^{K} + 0.36^{K})} = 0.23' < \frac{L}{6} = \frac{29'}{6 \times 12} = 0.40'$

FOUNDATION PRESSURE

$q = \frac{P}{A}\left(1 \pm \frac{6e}{L}\right) = \frac{1.25}{1.0' \times 2.5'}\left(1 \pm \frac{6 \times 0.23'}{2.5'}\right) = 0.77 \text{ KSF, GOVERNS}$
(0.22 KSF)

∴ MAX. SOIL PRESSURE UNDER THE DIKE IS $0.77 \text{ KSF} < 1.0 \text{ KSF}$ OK

APPENDIX D-30

WASTE CODES AND TREATMENT STANDARDS
OF PROCESS WASTE SURFACE IMPOUNDMENTS

HAZARDOUS WASTE CODES ASSOCIATED WITH CWM CHEMICAL SERVICES SURFACE IMPOUNDMENT CLOSURE

The following hazardous waste codes are associated with sludges and liner from the closure of the facilities process water ponds. These codes are derived from liquid wastes incinerated during the period May 20, 1988, to November 7, 1988, and solid waste incinerated from the period of June 20, 1988, to November 7, 1988, because sludge was previously removed from the ponds during the period from June 10-20, 1988.

D Codes	P Codes	P Codes	U Codes	U Codes
D001	P001	P113	U058	U148
D002	P002	P120	U060	U152
D003	P003	P122	U061	U154
D004	P004	P123	U067	U157
D005	P005		U068	U159
D006	P018	U Codes	U069	U160
D007	P010		U070	U161
D008	P011	U001	U071	U162
D009	P012	U002	U072	U165
D010	P013	U003	U073	U167
D011	P014	U004	U077	U169
D012	P015	U006	U078	U170
D013	P018	U007	U080	U182
D014	P022	U008	U088	U188
D015	P024	U009	U103	U190
D016	P028	U010	U107	U196
	P029	U011	U108	U201
F Codes	P030	U012	U110	U204
	P037	U018	U112	U209
F001	P042	U019	U117	U210
F002	P044	U020	U119	U211
F003	P047	U021	U121	U213
F004	P051	U022	U122	U218
F005	P059	U029	U123	U219
F006	P070	U031	U125	U220
F007	P075	U034	U127	U222
F009	P077	U036	U128	U223
F024	P087	U037	U129	U226
	P089	U039	U131	U228
K Codes	P094	U044	U133	U238
	P098	U048	U134	U239
K085	P102	U051	U135	U240
K086	P104	U052	U136	U244
K095	P105	U053	U138	U246
K096	P106	U055	U140	U247
	P108	U056	U142	U248
		O057	U144	U328
			U147	U359

The spent solvent regulations apply to the codes F001-F005. The treatment limits set by the TCLP are as follows:

Acetone	0.59	ppm
n-Butyl Alcohol	5.0	ppm
Carbon Disulfide	4.81	ppm
Carbon Tetrachloride	0.96	ppm
Chlorobenzene	0.05	ppm
Cresols (and cresylic acid)	0.75	ppm
Cyclohexanone	0.75	ppm
1,2-Dichlorobenzene	0.125	ppm
Ethyl Acetate	0.75	ppm
Ethyl Benzene	0.053	ppm
Ethyl Ether	0.75	ppm
Isobutanol	5.0	ppm
Methanol	0.75	ppm
Methylene Chloride	0.96	ppm
Methyl Ethyl Ketone	0.75	ppm
Methyl Isobutyl Ketone	0.33	ppm
Nitrobenzene	0.125	ppm
Pyridine	0.33	ppm
Tetrachloroethylene	0.05	ppm
Toluene	0.33	ppm
1,1,1-Trichlorethane	0.41	ppm
1,1,2-Trichloro-1,2,2-trifluoroethane	0.96	ppm
Trichloroethylene	0.091	ppm
Trichlorofluoromethane	0.96	ppm
Xylene	0.15	ppm

The first, second and third third landban regulations apply to the following waste codes. The waste codes are listed with the final treatment standards:

Waste Code	Constituent	Treatment Standard		Method
D003 (3rd)	Cyanide (total)	110	ppm	TCA
	Cyanide (amenable)	9.1	ppm	TCA
D004 (3rd)	Arsenic	5.6	ppm	TCLP
D006	Cadmium	0.14	ppm	TCLP
D007	Chromium	0.094	ppm	TCLP
D008	Lead	0.51	ppm	TCLP
D009	Mercury	0.025	ppm	TCLP
D010	Selenium	5.6	ppm	TCLP
D011	Silver	0.072	ppm	TCLP

Waste Code	Constituent	Treatment Standard		Method
D012 (3rd)	Endrin	0.13	ppm	TCA
D013 (3rd)	Lindane	0.066	ppm	TCA
D014 (3rd)	Methoxychlor	0.18	ppm	TCA
D015 (3rd)	Toxaphene	1.3	ppm	TCA
D016 (3rd)	2,4-D	10	ppm	TCA
F002 (3rd)	1,1,2-Trichloroethane	6.2	ppm	TCA
F005 (3rd)	Benzene	3.72	ppm	TCA
	2-Ethoxyethanol	47.5	ppm	TCA
	2-Nitropropane	5.6	ppm	TCA
F006	Cadmium	0.066	ppm	TCLP
	Chromium (total)	5.2	ppm	TCLP
	Lead	0.51	ppm	TCLP
	Nickel	0.32	ppm	TCLP
	Silver	0.072	ppm	TCLP
	Cyanides (Total)	590	ppm	TCA
	Cyanides (Amenable)	30	ppm	TCA
F007	Cadmium	0.066	ppm	TCLP
	Chromium (total)	5.2	ppm	TCLP
	Cyanides (Total)	590	ppm	TCA
	Cyanides (Amenable)	30	ppm	TCA
	Lead	0.51	ppm	TCLP
	Nickel	0.32	ppm	TCLP
	Silver	0.072	ppm	TCLP
F009	Cadmium	0.066	ppm	TCLP
	Chromium (total)	5.2	ppm	TCLP
	Cyanides (Total)	590	ppm	TCA
	Cyanides (Amenable)	30	ppm	TCA
	Lead	0.51	ppm	TCLP
	Nickel	0.32	ppm	TCLP
	Silver	0.072	ppm	TCLP

Waste Code	Constituent	Treatment Standard		Method
F024	2-Chloro-1,3-butadiene	0.28	ppm	TCA
	3-Chloropropene	0.28	ppm	TCA
	1,1-Dichloroethane	0.014	ppm	TCA
	1,2-Dichloroethane	0.014	ppm	TCA
	1,2-Dichloropropane	0.014	ppm	TCA
	cis-1,3-Dichloropropene	0.014	ppm	TCA
	trans-1,3-Dichloro-proprene	0.014	ppm	TCA
	Bis(2-ethylhexyl) phthalate	1.8	ppm	TCA
	Hexachloroethane	1.8	ppm	TCA
	Hexachlorodibenzo-furans	0.001	ppm	TCA
	Hexachlorodibenzo-p-dioxins	0.001	ppm	TCA
	Pentachlorodibenzofurans	0.001	ppm	TCA
	Pentachlorodibenzo-p dioxins	0.001	ppm	TCA
	Tetrachlorodibenzofurans	0.001	ppm	TCA
	Chromium (total)	0.073	ppm	TCLP
K085 (3rd)	Benzene	4.4	ppm	TCA
	Chlorobenzene	4.4	ppm	TCA
	o-Dichlorobenzene	4.4	ppm	TCA
	m-Dichlorobenzene	4.4	ppm	TCA
	p-Dichlorobenzene	4.4	ppm	TCA
	1,2,4-Trichlorobenzene	4.4	ppm	TCA
	1,2,4,5-Tetrachloro-benzene	4.4	ppm	TCA
	Pentachlorobenzene	4.4	ppm	TCA
	Hexachlorobenzene	4.4	ppm	TCA
	Aroclor 1016	0.13	ppm	TCA
	Aroclor 1221	0.13	ppm	TCA
	Aroclor 1232	0.13	ppm	TCA
	Aroclor 1242	0.13	ppm	TCA
	Aroclor 1248	0.13	ppm	TCA
	Aroclor 1254	0.13	ppm	TCA
	Aroclor 1260	0.13	ppm	TCA

Waste Code	Constituent	Treatment Standard		Method
K086	Acetone	0.37	ppm	TCA
	Bis(2-ethylhexyl) phthalate	0.49	ppm	TCA
	n-Butyl Alcohol	0.37	ppm	TCA
	Cyclohexanone	0.49	ppm	TCA
	1,2-Dichlorobenzene	0.49	ppm	TCA
	Ethyl Acetate	0.37	ppm	TCA
	Ethyl Benzene	0.031	ppm	TCA
	Methanol	0.37	ppm	TCA
	Methyl ethyl ketone	0.37	ppm	TCA
	Methyl isobutyl ketone	0.37	ppm	TCA
	Methylene chloride	0.037	ppm	TCA
	Napthalene	0.49	ppm	TCA
	Nitrobenzene	0.49	ppm	TCA
	Toluene	0.031	ppm	TCA
	1,1,1-Trichloroethane	0.044	ppm	TCA
	Trichloroethylene	0.031	ppm	TCA
	Xylenes	0.015	ppm	TCA
	Chromium (total)	0.094	ppm	TCLP
	Lead	0.37	ppm	TCLP
K086 (3rd)	Acetone	0.14	ppm	TCA
	Acetophenone	9.6	ppm	TCA
	Bis(2-ethylhexyl) phthalate	28	ppm	TCA
	n-Butyl Alcohol	2.6	ppm	TCA
	Butylbenzylphthalate	28	ppm	TCA
	Cyclohexanone	1.9	ppm	TCA
	1,2-Dichlorobenzene	6.2	ppm	TCA
	Diethyl phthalate	28	ppm	TCA
	Dimethyl phthalate	28	ppm	TCA
	Di-n-butyl phthalate	28	ppm	TCA
	Di-n-octyl phthalate	28	ppm	TCA
	Ethyl Acetate	5.6	ppm	TCA
	Ethyl Benzene	33	ppm	TCA
	Methanol	140	ppm	TCA
	Methyl ethyl ketone	200	ppm	TCA
	Methyl isobutyl ketone	33	ppm	TCA
	Methylene chloride	31	ppm	TCA
	Napthalene	5.9	ppm	TCA
	Nitrobenzene	14	ppm	TCA
	Toluene	28	ppm	TCA
	1,1,1-Trichloroethane	6.2	ppm	TCA
	Trichloroethylene	5.6	ppm	TCA
	Xylenes	33	ppm	TCA
	Cyanides (total)	1.5	ppm	TCA

Waste Code	Constituent	Treatment Standard		Method
K095	1,1,1,2-Tetrachloro-ethane	5.6	ppm	TCA
	1,1,2,2-Tetrachloro-ethane	5.6	ppm	TCA
	Tetrachlorethylene	6.0	ppm	TCA
	1,1,2-Trichloroethane	6.0	ppm	TCA
	Trichloroethylene	5.6	ppm	TCA
	Hexachloroethane	28	ppm	TCA
	Pentachlorethane	5.6	ppm	TCA
K096	1,3-Dichlorobenzene	5.6	ppm	TCA
	Pentachlorethane	5.6	ppm	TCA
	1,1,1,2-Tetrachloro-ethane	5.6	ppm	TCA
	1,1,2,2-Tetrachloro-ethane	5.6	ppm	TCA
	Tetrachlorethylene	6.0	ppm	TCA
	1,2,4-Trichlorobenzene	19	ppm	TCA
	Trichloroethylene	5.6	ppm	TCA
	1,1,2-Trichloroethane	6.0	ppm	TCA
P004 (3rd)	Aldrin	0.066	ppm	TCA
P010 P011 P012	Arsenic	5.6	ppm	TCLP
P013	Cyanide (total)	110	ppm	TCA
	Cyanide (amenable)	9.1	ppm	TCA
P024 (3rd)	p-Chloroaniline	16	ppm	TCA
P029	Cyanide (total)	110	ppm	TCA
	Cyanide (amenable)	9.1	ppm	TCA
P030	Cyanide (total)	110	ppm	TCA
	Cyanide (amenable)	9.1	ppm	TCA
P037 (3rd)	Dieldrin	0.13	ppm	TCA
P047 (3rd)	4,6-dinitrocresol	140	ppm	TCA
P051 (3rd)	Endrin	0.13	ppm	TCA
	Endrin aldehyde	0.13	ppm	TCA
P059 (3rd)	Heptachlor	0.066	ppm	TCA
	Heptachlor epoxide	0.066	ppm	TCA
P077 (3rd)	p-Nitroaniline	28	ppm	TCA

Waste Code	Constituent	Treatment Standard		Method
P089	Parathion	0.1	ppm	TCA
P094	Phorate	0.1	ppm	TCA
P098	Cyanide (total)	110	ppm	TCA
	Cyanide (amenable)	9.1	ppm	TCA
P104	Cyanide (total)	110	ppm	TCA
	Cyanide (amenable)	9.1	ppm	TCA
	Silver	0.072	ppm	TCLP
P106	Cyanide (total)	110	ppm	TCA
	Cyanide (amenable)	9.1	ppm	TCA
P123 (3rd)	Toxaphene	1.3	ppm	TCA
U002 (3rd)	Acetone	0.14	ppm	TCA
U003 (3rd)	Acetonitrile	0.35	ppm	TCA
U004 (3rd)	Acetophenone	9.6	ppm	TCA
U009 (3rd)	Acrylonitrile	0.28	ppm	TCA
U012 (3rd)	Aniline	14	ppm	TCA
U018 (3rd)	Benz(a)anthracene	3.6	ppm	TCA
U019 (3rd)	Benzene	36	ppm	TCA
U022 (3rd)	Benzo(a)pyrene	3.6	ppm	TCA
U029 (3rd)	Methyl Bromide	15	ppm	TCA
U031 (3rd)	n-Butanol	2.6	ppm	TCA
U036 (3rd)	Chlordane	0.13	ppm	TCA
U037 (3rd)	Chlorobenzene	5.7	ppm	TCA
U039 (3rd)	p-Chloro-m-cresol	14	ppm	TCA
U044 (3rd)	Chloroform	6.2	ppm	TCA
U048 (3rd)	2-Chlorophenol	5.7	ppm	TCA

Waste Code	Constituent	Treatment Standard		Method
U051 (3rd)	Napthalene	1.5	ppm	TCA
	Pentachlorophenol	7.4	ppm	TCA
	Phenanthrene	1.5	ppm	TCA
	Pyrene	1.5	ppm	TCA
	Toluene	28	ppm	TCA
	Xylenes	33	ppm	TCA
	Lead	0.51	ppm	TCLP
U052 (3rd)	o-Cresol	5.6	ppm	TCA
	Cresols (m & p isomers)	3.2	ppm	TCA
U057 (3rd)	Cyclohexanone	1.9	ppm	TCA
U060 (3rd)	o,p'-DDD	0.087	ppm	TCA
	p,p'-DDD	0.087	ppm	TCA
U061 (3rd)	o,p'-DDT	0.087	ppm	TCA
	p,p'-DDT	0.087	ppm	TCA
	o,p'-DDD	0.087	ppm	TCA
	p,p'-DDD	0.087	ppm	TCA
	o,p'-DDE	0.087	ppm	TCA
	p,p'-DDE	0.087	ppm	TCA
U067 (3rd)	Ethylene Dibromide	15	ppm	TCA
U068 (3rd)	Dibromomethane	15	ppm	TCA
U069	Di-n-butyl phthalate	28	ppm	TCA
U070 (3rd)	o-Dichlorobenzene	6.2	ppm	TCA
U071 (3rd)	m-Dichlorobenzene	6.2	ppm	TCA
U072 (3rd)	p-Dichlorobenzene	6.2	ppm	TCA
U073 (3rd)	3,3'-Dichlorobenzidine	16	ppm	TCA
U077 (3rd)	1,2-Dichloroethane	6.2	ppm	TCA
U078 (3rd)	1,1-Dichloroethylene ~~??Trans-1,2-dichloro-ethylene???~~	6.2	ppm	TCA
U080 (3rd)	Methylene Chloride	31	ppm	TCA
U088	Diethyl phthalate	28	ppm	TCA
U107	Di-n-octyl phthalate	28	ppm	TCA
U108 (3rd)	1,4-Dioxane	280	ppm	TCA

Waste Code	Constituent	Treatment Standard		Method
U112 (3rd)	Ethyl Acetate	5.6	ppm	TCA
U117 (3rd)	Ethyl Ether	140	ppm	TCA
U121 (3rd)	Flourotrichloromethane	33	ppm	TCA
U127 (3rd)	Hexachlorobenzene	37	ppm	TCA
U128 (3rd)	Hexachlorobutadiene	28	ppm	TCA
U129 (3rd)	alpha-BHC	0.066	ppm	TCA
	beta-BHC	0.066	ppm	TCA
	delta-BHC	0.066	ppm	TCA
	gamma-BHC (Lindane)	0.066	ppm	TCA
U131 (3rd)	Hexachloroethane	30	ppm	TCA
	~~??Hexachlorophene??~~			
U136 (3rd)	Arsenic	5.6	ppm	TCLP
U138 (3rd)	Iodomethane	65	ppm	TCA
U140 (3rd)	Isobutanol	170	ppm	TCA
U142 (3rd)	Kepone	0.043	ppm	TCA
U144	Lead	0.51	ppm	TCLP
U152 (3rd)	Methacrylonitrile	84	ppm	TCA
U157 (3rd)	3-Methylchloanthrene	33	ppm	TCA
U159 (3rd)	Methyl ethyl ketone	200	ppm	TCA
U161 (3rd)	Methyl isobutyl ketone	33	ppm	TCA
U162 (3rd)	Methyl methacrylate	160	ppm	TCA
U165 (3rd)	Napthalene	5.9	ppm	TCA
U167 (3rd)	1-Napthylamine	15	ppm	TCA
U169 (3rd)	Nitrobenzene	14	ppm	TCA
U170 (3rd)	4-Nitrophenol	65	ppm	TCA
U188 (3rd)	Phenol	6.2	ppm	TCA

Waste Code	Constituent	Treatment Standard		Method
U190	Phthalic anhydride (measured as phthalic acid)	28	ppm	TCA
U196 (3rd)	Pyridine	16	ppm	TCA
U201 (3rd)	Resourcinol	1.8	ppm	TCA
U204	Selenium	5.6	ppm	TCLP
U209 (3rd)	1,1,2,2-Tetrachloro-ethane	6.2	ppm	TCA
U210 (3rd)	Tetrachloroethylene	6.2	ppm	TCA
U211 (3rd)	Carbon tetrachloride	6.2	ppm	TCA
U220 (3rd)	Toluene	28	ppm	TCA
U226 (3rd)	1,1,1-Trichloroethane	6.2	ppm	TCA
U228 (3rd)	Trichloroethylene	5.6	ppm	TCA
U239 (3rd)	Xylene	33	ppm	TCA
U240 (3rd)	2,4-d	10	ppm	TCA
U247 (3rd)	Methoxychlor	0.18	ppm	TCA

APPENDIX D-31

SURFACE IMPOUNDMENT CLOSURE CERTIFICATION

CWM Chemical Services, Inc.

Chicago Incinerator
11700 S. Stony Island Ave
Chicago, IL 60617
312-646-5700

Federal Express #8437713255

December 30, 1993

Mr. Lawrence Eastep, P.E., Manager
Illinois Environmental Protection Agency
Division of Land Pollution Control, #33
Permit Section
2200 Churchill Road
Post Office Box 19276
Springfield, IL 62794-9276

RE: CWM Chemical Services, Inc.
Surface Impoundment
Interim Status Closure Certification

Dear Mr. Eastep:

In accordance with the Agency's June 11, 1993 and July 27, 1993 letters on the subject matter, CWM Chemical Service, Inc, (CWMCS) is submitting the original and two (2) copies of the report entitled, "Construction Quality Assurance Monitoring During Interim Status Closure, Surface Impoundments, Chicago Incinerator Facility, Chicago, Illinois; December 1993". All information required for certification of closure of the interim surface impoundments at the CWMCS facility is included in this report. Based upon a telephone conversation between CWMCS and Mr. Jim Moore of the Agency on December 17, 1993, the daily operating report, or daily logs, required to be submitted with the Closure documentation, will be maintained at the facility, available for Agency review and not submitted to the Agency due to the volume of information collected for the closure.

Additionally, per conversations with Mr. Jim Moore on December 17, 1993, the certification that CWMCS has recorded the notations specified in 35 IAC 725.219(b)(1), within 60 days after certification of closure of the surface impoundments by the Agency, will be provided to the Agency as required.

CWM Chemical Services, Inc.
Chicago Incinerator

If there are any questions on this report, please contact either myself or Jim Doyle at (312) 646-5700.

Sincerely,

Lisa Grassl

Lisa Grassl
Environmental Engineer
CWM Chemical Services, Inc.

LG:nad
Enclosure

cc: George Hamper - USEPA
Bob LaBoube
Jim Doyle
Jim Gary - (w/o encls.)
Brian Clarke - (w/o encls.)

Closure Certification Statement

Closure Log C-307-M-7

This statement is to be completed by both the responsible officer and by the registered professional engineer upon completion of closure. Submit one copy of the certification with original signatures and three additional copies.

The four (4) hazardous waste surface impoundments (T02) at the facility described in this document have been closed in accordance with the specifications in the approved closure plan. I certify under penalty of law that this document and all attachments were prepared under my direction or supervision in accordance with a system designed to assure that qualified personnel properly gather and evaluate the information submitted. Based on my inquiry of the person or persons who manage the system, or those persons directly responsible for gathering the information, the information submitted is, to the best of my knowledge and belief, true, accurate, and complete. I am aware that there are significant penalties for submitting false information, including the possibility of fine and imprisonment for knowing violations.

ILD 000672121
USEPA ID Number

CWM Chemical Services, Inc.
Facility Name

12/23/93
Signature of Owner/Operator / Date

James L. Gary, General Manager
Name and Title

12/28/93
Signature of Registered P.E. / Date

David M. List 62-047432
Name of Registered P.E. and Illinois Registration Number

Address of Registered P.E.:

Golder Construction Services, Inc.
2035 Asher Court Ste. 700
East Lansing, Michigan 48823

Registered P.E.'s Seal:

12/28/93
Date

LWE:MA:lat/sp/389Z,5

APPENDIX D-32

IEPA CLOSURE CERTIFICATION APPROVAL

State of Illinois
ENVIRONMENTAL PROTECTION AGENCY

Mary A. Gade, Director
217/524-3300

2200 Churchill Road, Springfield, IL 62794-9276

June 30, 1994

CWM Chemical Services, Inc.
Attn: Lisa Grassl
11700 Stony Island Avenue
Chicago, Illinois 60617

RECEIVED
JUL 7 1994
CWM ENVIRONMENT DEPARTMENT

Re: 0316000058 -- Cook County
CWM Chemical Services, Inc.
ILD000672121
Log No. C-307-M-8
Received: April 21, 1994
RCRA-Closure

Dear Ms. Grassl:

This is in response to your April 15, 1994 submittal which requested clarification of some of the items in the Agency's April 11, 1994 closure certification approval letter. The Agency has revised its April 11, 1994 letter to clarify the CWM concern about some of the conditions in the letter. This submittal from CWM has been reviewed as closure plan modification request for the closure of four (4) hazardous waste surface impoundments being closed as landfills (D80) at the above-referenced facility. Your closure plan modification request is approved subject to the following conditions and modifications:

1. This letter shall supersede the Agency's April 11, 1994 closure certification approval letter.

2. Certification that the hazardous waste surface impoundments had been closed as landfills (D80) in accordance with the approved closure plan by the owner/operator, James L. Gary, General Manager and an independent registered professional engineer, David M. List, P.E. of Illinois was received at this Agency on January 3, 1994. The Agency has determined that the closure of the hazardous waste surface impoundment has met the requirements of Interim Status Standards, 35 Ill. Adm. Code, Part 725 (40 CFR, Part 265).

3. The subject facility was inspected by a representative of this Agency on January 21, 1994. The Agency concurs that the hazardous waste surface impoundments (T02) were closed in accordance with the approved closure plan and post-closure plan approved on September 14, 1992 as modified by CWM and the Agency under actions taken by the Agency under Log No. C-307-M-5, C-307-M-6 and C-307-M-7.

4. This approval letter only deals with the subject surface impoundments at the above-referenced facility. Operations, closure, etc. of any other RCRA units at this facility are not addressed in this letter.

5. Post-closure care of the impoundments shall begin during the third quarter of 1994 and shall continue for a minimum of thirty (30) years. The post-closure care period may be shortened or extended by the Illinois Pollution Control Board in accordance with 35 IAC 725.217(a) or by IEPA in accordance with 35 IAC 725.218(g). During the interim status post-closure period, the applicable post-closure requirements of 35 IAC 725, Subparts G, H and K must be met.

6. Post-closure use of the CWM facility must never be allowed to disturb the integrity of the final cover, liner(s) or any other components associated with the surface impoundments or the function of the facility's monitoring systems, unless the Agency determines that the disturbance:

   a. Is necessary to the proposed use of the property, and will not increase the potential hazard to human health or the environment; or

   b. Is necessary to reduce a threat to human health or the environment. (35 IAC 725.217(c))

7. The approved post-closure care plan may be amended in accordance with 35 IAC 725.218(d) or may be modified in accordance with 35 IAC 725.218(g).

8. If, during the post-closure care period, the owner or operator of the facility wishes to remove any material from the closed impoundments, the requirements of 35 IAC 725.219(c) must be met.

9. Post-closure care of the impoundments shall be carried out in accordance with the procedures set forth in the document entitled Chicago Incinerator Facility, Surface Impoundments Interim Status Closure Plan (Revision 1, July 16, 1992), received July 16, 1992, except as modified below:

   a. The contact person designated in the post-closure plan is Jim Doyle, Environmental Manager, CWM Chemical Services, Inc., 11700 Stony Island Avenue, Chicago, Illinois 60617. The Agency shall be notified in writing within five (5) days of the date the designated contact person is changed.

   b. Monthly inspections shall be carried out during the interim status post-closure period. In addition, the impoundments must be inspected after each precipitation (liquid) event greater than one inch over a 24-hour period.

c. Corrective action shall be taken on the final cover during the post-closure care period if (1) cracks or erosion channels greater than one inch wide or 6 inches deep are observed in the final cover, (2) depressions (ponds) are observed, (3) erosion problems occur or (4) little or no live vegetative cover is present in a given area.

d. All observations during the inspections and corrective actions taken must be recorded in a log book. This log book shall be available for Agency review. In addition, all corrective actions taken shall be closely monitored during subsequent inspections.

e. Financial assurance for providing post-closure care of these impoundments must be maintained in accordance with 35 IAC 725, Subpart H.

10. The security requirements specified in 35 IAC 725.114 must be met during the interim-status post-closure care period.

11. No later than sixty (60) days after the completion of the established post-closure care period for the four (4) surface impoundments, the owner or operator shall submit to the Agency, by registered mail, a certification that the post-closure care period for the hazardous waste disposal units was performed in accordance with the specifications in the approved post-closure plan for 35 IAC, Section 725.220 (as amended February 5, 1987). The certification must be signed by the owner or operator and an independent registered professional engineer, and it must meet the requirements of 35 IAC 702.126. Documentation supporting the certification must also be submitted.

12. The groundwater monitoring program to be carried out at these surface impoundments during the interim status post-closure care period shall be in accordance with: (1) the document entitled Chicago Incinerator Facility, Surface Impoundments Interim Status Closure Plan (Revision 1, July 16, 1992), (2) the Agency's January 12, 1993 approval letter, and (3) March 16, 1993 submittal from CWM.

13. Analysis of all groundwater samples shall be in accordance with the procedures set forth in Test Methods for Evaluating Solid Wastes (SW-846), Third Edition.

14. All groundwater monitoring data shall be submitted to the Agency on the attached Chemical Analysis Forms. In addition, the Agency has specified the well designations in the table below to be recorded in the Chemical Analysis Forms.

CWM Designation	IEPA Well Designation
G120S	G20S
G121S	G21S
G122S	G22S
G123S	G23S

CWM Designation	IEPA Well Designation
G124S	G24S
G126S	G26S
G307S	G07S
G334S	G34S
G343S	G43S

15. Prior to March 1 of each year during the thirty (30) years of post-closure period a report must be submitted to the Agency which evaluates the existing groundwater monitoring program and groundwater monitoring results collected during the previous year. This report shall (1) summarize the groundwater monitoring results for the previous year, (2) identify the rate and extent of contaminant migration and (3) determine if the existing program will continue to adequately monitor the rate of extent of contaminant migration (including the actual concentration of the contaminants in the groundwater).

    A request to modify the groundwater monitoring plan shall be submitted with this report if the evaluation determines that the existing program no longer monitors the rate and extent of contaminant migration adequately. The modification request shall propose changes in the groundwater monitoring program which are necessary to ensure that the program continues to adequately monitor (1) the rate and extent of contaminant migration and (2) the actual concentration of the hazardous waste or hazardous waste constituents in the groundwater. During the time that the modification request is reviewed by the Agency, groundwater monitoring at the impoundments shall be carried out in accordance with the previously approved program.

Should you have any questions regarding this matter, please contact Munib Ahmad or Ron Hewitt at 217/524-3300.

Sincerely,

Douglas W. Clay, P.E.
Hazardous Waste Branch Manager
Permit Section, Bureau of Land

DWC:MA/bst/sp0182W/1-4
JKM

Certified #P 373 313 925

CWM Chemical Services, Inc.

Chicago Incinerator
11700 S. Stony Island Ave
Chicago, IL 60617
312-646-5700

Federal Express #112 8590 373

April 19, 1994

Mr. Jim Moore
Illinois Environmental Protection Agency
2200 Churchill Road
Springfield, IL 62706-9276

RE: CWM Chemical Services, Inc.
Surface Impoundment Closure

Dear Mr. Moore:

As discussed between yourself, Mr. Jim Doyle and myself on April 18, 1994, CWM Chemical Services, Inc. (CWMCS) received the Agency's April 11, 1994 letter approving the closure certification for the four (4) hazardous waste surface impoundments at the subject facility. Upon our review of the approval, a number of items requiring clarification were identified and which were the subject of our phone conversation. The items for which CWMCS was requesting clarification, and our understanding of the Agency's interpretation of these questions, as discussed in our conversation, are presented below:

Condition #3

Owners and operators of waste management units...are required to submit an application for a Post-Closure Permit...upon request from the IEPA.

It is CWMCS' understanding that this is a standard condition regarding IEPA post-closure requirements, and that the closure approval letter does not constitute a request from the Agency to submit a Post-Closure permit application. In the event that a post-closure permit application is requested by the Agency, written notification to that effect will be provided to CWMCS.

Conditions #5 and #12

Post-closure care of the impoundments shall begin upon receipt of this letter and shall continue for a minimum of thirty (30) years.

The groundwater monitoring program to be carried out at these surface impoundments during the interim status post-closure care period shall be in accordance with: (1) the document entitled Chicago Incinerator Facility, Surface Impoundments Interim Status

Closure Plan (Revision 1, July 16, 1992), (2) the Agency's January 12, 1993 approval letter, and (3) March 16, 1993 submittal from CWM.

It is CWMCS' understanding that the post-closure groundwater monitoring program, as specified in the documents and letters stated by the Agency, may begin during the third quarter of 1994. The timing of the implementation of the post-closure groundwater monitoring program is related to the scheduling of the second quarter monitoring programs at the facility and the potential problems which may occur should the program be changed at this date.

CWMCS provided a letter to Mr. Munib Ahmad at the IEPA a letter, dated April 8, 1994 in which we noted that the second quarter, 1994 monitoring programs had been scheduled with both the analytical laboratory and the sampling team for April 28-29, 1994. Approval of the closure certification for the surface impoundments received after this date (during the second quarter), would necessitate the commencement of the post-closure monitoring program during the third quarter of 1994. This sampling event is currently scheduled to begin on July 5, 1994, which is at the beginning of a quarter, thereby allowing for the maximum amount of time to collect, analyze and evaluate the results from the full Appendix IX sampling required by the post-closure program.

In accordance with the approved post-closure monitoring program, CWMCS will discontinue the current groundwater assessment program, which has been in place (with minor modifications) since 1988. The groundwater monitoring program required by IEPA Operating Permit Number 1981-46-OP-EXP will also be discontinued upon commencement of the post-closure monitoring program. The post-closure monitoring program includes those wells monitored as part of the ongoing assessment program, one additional downgradient monitoring well previously installed for assessment purposes at the facility, and three new upgradient monitoring wells to further assess any potential impacts from upgradient, off-site sources.

Condition #14

All groundwater monitoring data shall be submitted to the Agency on the previously provided forms. When utilizing these forms, please record the Agency designated monitor point number in spaces 19-22.

It is CWMCS' understanding that new forms can be provided by the Agency, which will be representative of the monitoring program for the facility as the forms provided previously are designed for initial background and routine groundwater monitoring and do not include the analytical parameters which will be monitored during the post-closure care period. Agency designated monitor point numbers will also need to be assigned, or the monitor point number spaces expanded to account for the current designations of the monitoring wells at the facility (eg. G120S, will not fit into four spaces on the current forms.)

Condition #9b

Monthly inspections shall be carried out during the interim status post-closure period. In addition, the impoundments must be inspected after each precipitation event greater than one inch over a 24-hour period.

It is CWMCS' understanding that the precipitation event should be in the form of liquid precipitation, over a 24-hour period, in order for the additional inspections to be conducted.

Condition #15

Prior to March 1 of each year (beginning in 1989), a report must be submitted to the Agency which evaluates the existing groundwater monitoring program and groundwater monitoring results collected during the previous year.

CWMCS has submitted annual groundwater monitoring reports including the time period from 1989 to date. It is CWMCS' understanding that the wording presented in this condition is standard language for IEPA closure approval letters and does not impose additional reporting requirements for the period of 1989 through 1994. Finally, that the reference in the condition to "each year", implies that the groundwater monitoring reports will be required to be submitted during the thirty (30) year post-closure care period.

It is CWMCS' intent to implement the conditions of this approval as described above. If the Agency's understanding of the implementation of the conditions is different from that described in this correspondence, please contact me at your earliest convenience so that a mutual understanding can be reached.

Sincerely,

Lisa Grassl

Lisa Grassl
Environmental Engineer
CWM Chemical Services, Inc.

cc: Munib Ahmad
Jim Doyle
Bob LaBoube
Brian Clarke

bcc: Agency Binder
Frank Kudrna - Kudrna Assoc., Ltd.
Richard Carlson - Carlson Environ.

State of Illinois
ENVIRONMENTAL PROTECTION AGENCY

Mary A. Gade, Director
217/524-3300

2200 Churchill Road, Springfield, IL 62794-9276

April 11, 1994

RECEIVED
APR 14 1994
CWM ENVIRONMENTAL DEPARTMENT

CWM Chemical Services, Inc.
Attn: Jim Doyle
11700 Stony Island Avenue
Chicago, Illinois 60617

Re: 031600008 -- Cook County
CWM Chemical Services, Inc.
ILD000672121
Received: January 3, 1994
RCRA-Closure

Dear Mr. Doyle:

The closure certification submitted by CWM Chemical Services, Inc. for the four (4) hazardous waste surface impoundments being closed as landfills (D80) at the above-referenced facility has been reviewed by this Agency. The interim status closure/post-closure plan for the subject impoundments is hereby approved subject to the following conditions and modifications:

1. Certification that the hazardous waste surface impoundments had been closed as landfills (D80) in accordance with the approved closure plan by the owner/operator, James L. Gary, General Manager and an independent registered professional engineer, David M. List, P.E. of Illinois was received at this Agency on January 3, 1994. The Agency has determined that the closure of the hazardous waste surface impoundment has met the requirements of Interim Status Standards, 35 Ill. Adm. Code, Part 725 (40 CFR, Part 265).

2. The subject facility was inspected by a representative of this Agency on January 21, 1994. The Agency concurs that the hazardous waste surface impoundments (T02) were closed in accordance with the approved closure plan and post-closure plan approved on September 14, 1992 as modified by CWM and the Agency under actions taken by the Agency under Log No. C-307-M-5, C-307-M-6 and C-307-M-7.

3. Owners and operators of waste management units which received wastes after July 26, 1982 or that certified closure according to 35 IAC 725.215 after January 26, 1983 are required to submit an application for a Post-Closure Permit meeting the requirements of 35 IAC, Part 724 upon request from the IEPA unless it is demonstrated that closure by removal has been achieved. (35 IAC Section 703.121(b))

4. This approval letter only deals with the subject surface impoundments at the above-referenced facility. Operations, closure, etc. of any other RCRA units at this facility are not addressed in this letter.

5. Post-closure care of the impoundments shall begin upon receipt of this letter and shall continue for a minimum of thirty (30) years. The post-closure care period may be shortened or extended by the Illinois Pollution Control Board in accordance with 35 IAC 725.217(a) or by IEPA in accordance with 35 IAC 725.218(g). During the interim status post-closure period, the applicable post-closure requirements of 35 IAC 725, Subparts G, H and K must be met.

6. Post-closure use of the CWM facility must never be allowed to disturb the integrity of the final cover, liner(s) or any other components associated with the surface impoundments or the function of the facility's monitoring systems, unless the Agency determines that the disturbance:

   a. Is necessary to the proposed use of the property, and will not increase the potential hazard to human health or the environment; or

   b. Is necessary to reduce a threat to human health or the environment. (35 IAC 725.217(c))

7. The approved post-closure care plan may be amended in accordance with 35 IAC 725.218(d) or may be modified in accordance with 35 IAC 725.218(g).

8. If, during the post-closure care period, the owner or operator of the facility wishes to remove any material from the closed impoundments, the requirements of 35 IAC 725.219(c) must be met.

9. Post-closure care of the impoundments shall be carried out in accordance with the procedures set forth in the document entitled Chicago Incinerator Facility, Surface Impoundments Interim Status Closure Plan (Revision 1, July 16, 1992), received July 16, 1992, except as modified below:

   a. The contact person designated in the post-closure plan is Jim Doyle, Environmental Manager, CWM Chemical Services, Inc., 11700 Stony Island Avenue, Chicago, Illinois 60617. The Agency shall be notified in writing within five (5) days of the date the designated contact person is changed.

   b. Monthly inspections shall be carried out during the interim status post-closure period. In addition, the impoundments must be inspected after each precipitation event greater than one inch over a 24-hour period.

c. Corrective action shall be taken on the final cover during the post-closure care period if (1) cracks or erosion channels greater than one inch wide or 6 inches deep are observed in the final cover, (2) depressions (ponds) are observed, (3) erosion problems occur or (4) little or no live vegetative cover is present in a given area.

d. All observations during the inspections and corrective actions taken must be recorded in a log book. This log book shall be available for Agency review. In addition, all corrective actions taken shall be closely monitored during subsequent inspections.

e. Financial assurance for providing post-closure care of these impoundments must be maintained in accordance with 35 IAC 725, Subpart H.

10. The security requirements specified in 35 IAC 725.114 must be met during the interim-status post-closure care period.

11. No later than sixty (60) days after the completion of the established post-closure care period for the four (4) surface impoundments, the owner or operator shall submit to the Agency, by registered mail, a certification that the post-closure care period for the hazardous waste disposal units was performed in accordance with the specifications in the approved post-closure plan for 35 IAC, Section 725.220 (as amended February 5, 1987). The certification must be signed by the owner or operator and an independent registered professional engineer, and it must meet the requirements of 35 IAC 702.126. Documentation supporting the certification must also be submitted.

12. The groundwater monitoring program to be carried out at these surface impoundments during the interim status post-closure care period shall be in accordance with: (1) the document entitled Chicago Incinerator Facility, Surface Impoundments Interim Status Closure Plan (Revision 1, July 16, 1992), (2) the Agency's January 12, 1993 approval letter, and (3) March 16, 1993 submittal from CWM.

13. Analysis of all groundwater samples shall be in accordance with the procedures set forth in Test Methods for Evaluating Solid Wastes (SW-846), Third Edition.

14. All groundwater monitoring data shall be submitted to the Agency on the previously provided forms. When utilizing these forms, please record the Agency designated monitor point number is spaces 19-22.

15. Prior to March 1 of each year (beginning in 1989), a report must be submitted to the Agency which evaluates the existing groundwater monitoring program and groundwater monitoring results collected during the previous year. This report shall (1) summarize the groundwater monitoring results for the previous year, (2) identify the rate and extent of contaminant migration and (3) determine if the existing program will continue to adequately monitor the rate of extent of contaminant migration (including the actual concentration of the contaminants in the groundwater).

A request to modify the groundwater monitoring plan shall be submitted with this report if the evaluation determines that the existing program no longer monitors the rate and extent of contaminant migration adequately. The modification request shall propose changes in the groundwater monitoring program which are necessary to ensure that the program continues to adequately monitor (1) the rate and extent of contaminant migration and (2) the actual concentration of the hazardous waste or hazardous waste constituents in the groundwater. During the time that the modification request is reviewed by the Agency, groundwater monitoring at the impoundments shall be carried out in accordance with the previously approved program.

Should you have any questions regarding this matter, please contact Munib Ahmad at 217/524-3300.

Sincerely,

Douglas W. Clay, P.E.
Hazardous Waste Branch Manager
Permit Section, Bureau of Land

DWC:MA/bst/sp0182W/1-4
JCM

cc: USEPA, George Hamper

APPENDIX D-33

SURVEY PLAT

Exhibit

THAT PART OF THE EAST 1/2 OF FRACTIONAL SECTION 23 AND PART OF THE WEST 1/2 OF SECTION 24, ALL IN TOWNSHIP 37 NORTH, RANGE 14, EAST OF THE THIRD PRINCIPAL MERIDIAN, SOUTH OF THE INDIAN BOUNDARY LINE AND THAT PART OF LAKE CALUMET IN SAID TOWNSHIP AND RANGE, BOUNDED AND DESCRIBED AS FOLLOWS: COMMENCING AT THE SOUTHEAST CORNER OF SLIP NUMBER 8, AS DELINEATED IN "THE AREND VAN VLISSINGEN PLAN FOR PROPOSED DEVELOPMENT", AS AMENDED MAY 12, 1987; THENCE NORTH 19 DEGREES 42 MINUTES 41 SECONDS WEST, ALONG THE NORTHEASTERLY LINE OF SAID SLIP NUMBER 8, A DISTANCE OF 400.00 FEET TO THE NORTHEAST CORNER THEREOF; THENCE SOUTH 70 DEGREES 17 MINUTES 19 SECONDS WEST, ALONG THE NORTHWESTERLY LINE OF SLIP NUMBER 8, A DISTANCE OF 351.27 FEET; THENCE NORTH 19 DEGREES 42 MINUTES 41 SECONDS WEST, ALONG A LINE DRAWN PERPENDICULAR TO SAID NORTHWESTERLY LINE OF SLIP NUMBER 8, A DISTANCE OF 12.00 FEET TO THE POINT OF BEGINNING OF THE TRACT OF LAND HEREIN DESCRIBED; THENCE SOUTH 69 DEGREES 34 MINUTES 35 SECONDS WEST, 290.96 FEET TO A POINT, SAID POINT BEING 30.31 FEET (AS MEASURED PERPENDICULARLY) NORTHWESTERLY OF THE NORTHWESTERLY LINE OF SLIP NUMBER 8 AFORESAID; THENCE NORTHWESTERLY 63.79 FEET, ALONG THE ARC OF A CIRCLE, CONVEX TO THE SOUTHWEST, TANGENT TO THE LAST DESCRIBED LINE, HAVING A RADIUS OF 41.00 FEET AND WHOSE CHORD BEARS NORTH 65 DEGREES 51 MINUTES 04 SECONDS WEST, 57.55 FEET; THENCE NORTH 21 DEGREES 18 MINUTES 42 SECONDS WEST, ALONG A LINE TANGENT TO THE LAST DESCRIBED COURSE, 265.11 FEET; THENCE NORTHEASTERLY 41.19 FEET, ALONG THE ARC OF A CIRCLE, CONVEX TO THE NORTHWEST, TANGENT TO THE LAST DESCRIBED LINE, HAVING A RADIUS OF 26.00 FEET AND WHOSE CHORD BEARS NORTH 24 DEGREES 06 MINUTES 19 SECONDS EAST, 37.02 FEET TO A POINT, SAID POINT BEING 30.10 FEET (AS MEASURED PERPENDICULARLY) SOUTHEASTERLY OF THE SOUTHEASTERLY LINE OF SLIP NUMBER 8, AS DELINEATED IN "THE AREND VAN VLISSINGEN PLAN FOR PROPOSED DEVELOPMENT" AFORESAID; THENCE NORTH 69 DEGREES 29 MINUTES 19 SECONDS EAST, ALONG A LINE TANGENT TO THE LAST DESCRIBED COURSE, 320.77 FEET TO A POINT, SAID POINT BEING 29.92 FEET (AS MEASURED PERPENDICULARLY) SOUTHEASTERLY OF THE SOUTHEASTERLY LINE OF SAID SLIP NUMBER 8, THENCE SOUTHEASTERLY 28.89 FEET, ALONG THE ARC OF A CIRCLE, CONVEX TO THE NORTHEAST, TANGENT TO THE LAST DESCRIBED LINE, HAVING A RADIUS OF 17.00 FEET AND WHOSE CHORD BEARS SOUTH 85 DEGREES 11 MINUTES 34 SECONDS EAST, 24.18 FEET; THENCE SOUTH 19 DEGREES 52 MINUTES 28 SECONDS EAST, ALONG A LINE TANGENT TO THE LAST DESCRIBED COURSE, 298.38 FEET; THENCE SOUTHWESTERLY 29.66 FEET, ALONG THE ARC OF A CIRCLE, CONVEX TO THE SOUTHEAST, TANGENT TO THE LAST DESCRIBED LINE, HAVING A RADIUS OF 19.00 FEET AND WHOSE CHORD BEARS SOUTH 24 DEGREES 51 MINUTES 03 SECONDS WEST, 26.74 FEET TO THE HEREINABOVE DESIGNATED POINT OF BEGINNING, ALL IN COOK COUNTY, ILLINOIS.

AREA = 118,984.1 SQUARE FEET OR 2.73173 ACRES.

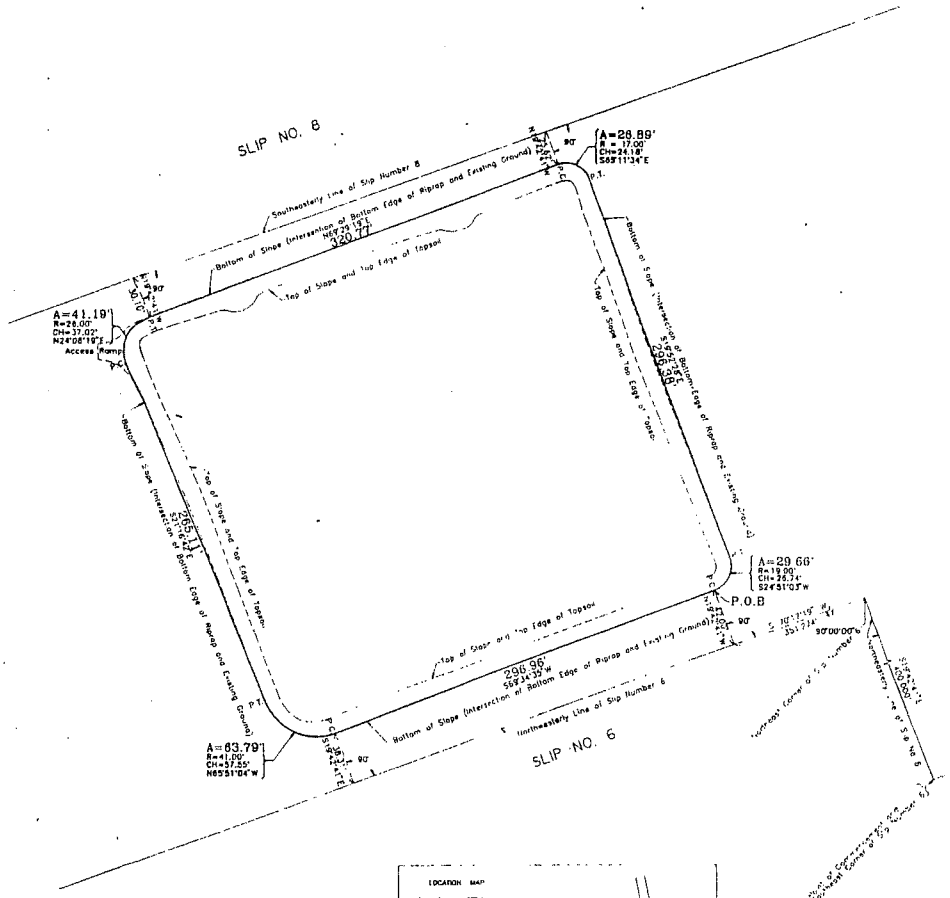

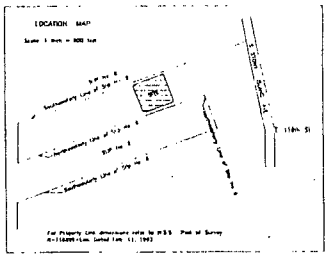

GRAPHIC SCALE

(IN FEET)
1 inch = 40 ft.

SURVEY NO. N-118586 SURVEY DATE: MAY 3, 1994

NATIONAL SURVEY SERVICE, INC.
ENGINEERS AND LAND SURVEYORS

P/N18586/05688.DWG

APPENDIX D-34

SURFACE IMPOUNDMENT POST-CLOSURE NOTICE

CWM Chemical Services, Inc.

Chicago Incinerator
11700 S. Stony Island Ave
Chicago, IL 60617
312-646-5700

Federal Express #206 3378 895

May 10, 1994

Mr. Anthony Ianello, Executive Director
Illinois International Port District
3600 East 95th Street
Chicago, IL 60617-5193

RE: CWM Chemical Services, Inc.
Chicago Incinerator
Surface Impoundment Closure Certification and Deed Restriction

Dear Mr. Ianello:

As indicated in our correspondence addressed to you, dated April 26, 1994, regarding the subject referenced above, CWMCS has prepared information and documents which are required to fulfill the requirements of Title 35 of the Illinois Administrative Code (IAC) 725.219(b)(1), related to this project.

The information and documents which are required as components of this certification are presented in a series of attachments to this correspondence. The specific requirements of the Illinois environmental regulations and the corresponding document included to provide the information is outlined in detail below.

CWMCS has attempted to provide the required information in a complete and concise form in an effort to limit the number of documents which are necessary to be associated with the deed to the property.

Specifically, the provisions of 35 IAC 725.219(b)(1) require that within sixty days of certification of closure of a land disposal unit, the property owner is required to:

1) Record, in accordance with Illinois law a notation on the deed to the facility property ... or on some other instrument which is normally examined during title search... that will in perpetuity notify an potential purchaser of the property that:

   a) The land has been used to manage hazardous wastes;

   b) Its use is restricted under 35 IAC 725 Subpart G and;

   c) The survey plat and the record of the type, location and quantity of hazardous wastes disposed of within each cell or other hazardous land disposal unit have been filed with the County Recorder, and any local zoning authority, or any authority with jurisdiction over local land use and with the Agency.

CWM Chemical Services, Inc.

Chicago Incinerator

Included as Attachment 1 to this correspondence is a "**draft**" certification statement which includes the information required by Items 1(a),(b) and (c) above, as applicable to this project.

Included as Attachment 2 is a plat of survey, dated May 3, 1994, prepared by a surveyor registered in the State of Illinois, which identifies the legal description corresponding to the boundaries of the former surface impoundments as required by paragraph (c) above.

It is CWMCS' understanding that the information and documents included with this correspondence comply with the requirements of the Illinois environmental regulations which are applicable to this project.

Please review this correspondence and attachments to determine if the information contained herein meets the needs of the Illinois International Port for purposes of initiating the actions required to record a notice in the deed to the property, restricting it's future use in accordance with 35 IAC 725.219.

Based upon IEPA's approval of the surface impoundment closure certification report on April 11, 1994 it is CWMCS' understanding that a certification; as required by 35 IAC 725.219(a) be submitted to the Agency no later than June 10, 1994 which documents that the information specified in 35 IAC 725.219(b) has been completed.

If you have questions regarding this information or if I can be of further assistance in this matter please contact me at (312) 646-5700.

Sincerely,

Jim Doyle
Environmental Manager
CWM Chemical Services, Inc.

cc: Brian Clarke
Bob LaBoube
Lisa Grassl
Richard Carlson, Carlson Environmental
Frank Kudrna, Kudrna and Assoc. Ltd.
Terri Diamond, Earl Neal and Assoc.

CWM Chemical Services, Inc.
Chicago Incinerator

ATTACHMENT 1

DRAFT

ILLINOIS INTERNATIONAL PORT (OWNER)
PROPERTY LOCATED AT:
11700 SOUTH STONY ISLAND AVENUE
CHICAGO, ILLINOIS

CWM CHEMICAL SERVICES, INC., (OPERATOR)
CHICAGO INCINERATOR
SURFACE IMPOUNDMENT POST-CLOSURE NOTICE AND CERTIFICATION

In accordance with the requirements of Title 35 of the Illinois Administrative Code (IAC) 725.219(b) the Illinois International Port, as owner of the property upon which the former surface impoundments are located, and CWM Chemical Services, Inc., as the former operator of these units hereby submits the documents and certification required by the applicable Illinois environmental regulations.

The specific portion of the property to which this certification is applicable is identified by the legal description contained on the plat of survey, dated May 3, 1994, prepared by a registered surveyor in the State of Illinois, which is included by reference in this certification and is attached as **Exhibit 1**. The legal description of the unit contained on the plat of survey corresponds to the boundaries of the former surface impoundments located on this property.

Therefore, in accordance with 35 IAC 725.219(b)(1)(A): the property encompassed within the above referenced legal description has been used to manage hazardous waste.

In accordance with 35 IAC 725.219(b)(1)(B): the use of the property encompassed within the above referenced legal description is restricted under 35 IAC Subpart G, and

In accordance with 35 IAC 725.219(b)(1)(C): the record of the type, location and quantity of the hazardous wastes disposed of within the boundaries of the unit described on the above referenced legal description is as follows:

Type of hazardous wastes disposed of within the unit- As required by Federal and State environmental regulations the incinerator process water which was previously delivered to the former surface impoundments was characterized as a hazardous waste pursuant to USEPA's so called "derived-from" rule found at 40 Code of Federal Regulations (CFR) 261.3(c)(2)(i) and was regulatorily defined to be a hazardous waste because the process water was derived from the incineration of hazardous wastes.

The types of hazardous wastes associated with the former surface impoundments are described by the USEPA waste codes which are used to define and describe specific hazardous wastes. These wastes are defined in 40 CFR Part 261 by the waste codes derived from the liquid wastes incinerated during the period May 20, 1988, to November 7, 1988, and solid waste incinerated from the period of June 20, 1988, to November 7, 1988, because sludge was previously removed from the ponds during the period from June 10-20, 1988.

D Codes	P Codes	P Codes	U Codes	U Codes
D001	P001	P113	U058	U148
D002	P002	P120	U060	U152
D003	P003	P122	U061	U154
D004	P004	P123	U067	U157
D005	P005		U068	U159
D006	P008	**U Codes**	U069	U160
D007	P010		U070	U161
D008	P011	U001	U071	U162
D009	P012	U002	U072	U165
D010	P013	U003	U073	U167
D011	P014	U004	U077	U169
D012	P015	U006	U078	U170
D013	P018	U007	U080	U182
D014	P022	U008	U088	U188
D015	P024	U009	U103	U190
D016	P028	U010	U107	U196
	P029	U011	U108	U201
F Codes	P030	U012	U110	U204
	P037	U018	U112	U209
F001	P042	U019	U117	U210
F002	P044	U020	U119	U211
F003	P047	U021	U121	U213
F004	P051	U022	U122	U218
F005	P059	U029	U123	U219
F006	P070	U031	U125	U220
F007	P075	U034	U127	U222
F009	P077	U036	U128	U223
F024	P087	U037	U129	U226
	P089	U039	U131	U228
K Codes	P094	U044	U133	U238
	P098	U048	U134	U239
K085	P102	U051	U135	U240
K086	P104	U052	U136	U244
K095	P105	U053	U138	U246
K096	P106	U055	U140	U247
	P108	U056	U142	U248
		U057	U144	U328
			U147	U359

Location and quantity of hazardous wastes disposed within the unit- The specific location of the boundaries of the former surface impoundments is described by legal description included on the plat of survey, dated May 3, 1994, which is attached to this certification as Exhibit 1. The quantity of the wastes disposed of within the unit is also described on the plat of survey for the former surface impoundments as the area encompassing 118,994.1 square feet or 2.73173 acres.

POST CLOSURE NOTICE CERTIFICATION STATEMENT

I certify, under penalty of law, that this document and all attachments were prepared under my direction or supervision in accordance with a system designed to assure that qualified personnel properly gather and evaluate the information submitted. Based upon my inquiry of the person or persons who manage the system, or those persons directly responsible for gathering the information, the information submitted is, to the best of my knowledge and belief, true, accurate and complete. I am aware that there are significant penalties for submitting false information including the possibility of fine and imprisonment for knowing violations.

ILD000672121

Mr. Anthony Ianello, Executive Director
Illinois International Port
11700 South Stony Island Avenue
Chicago, IL 60617

Signature of Property Owner: _____

Date: _____