NORTHWEST MARINE IRON WORKS

MAILING ADDRESS: P.O. BOX 3109
PORTLAND, OR 97208

5555 N. CHANNEL AVE., BLDG. 2
PORTLAND, OREGON 97217

PHONE: (503) 285-7557

TWX: 910-464-6107 NORMARINE PTL

DATE: May 16, 1989

TO: All Crafts
Purchasing Department
Payroll Department
Accounting Department
Document Control

FROM: Lynn Mills

SUBJECT: M/V "Nieuw Amsterdam"

Effective at noon on Wednesday May 17, 1989 Job #4900 for the "Nieuw Amsterdam" will be closed. After that hour all time and material charges shall be to Job #4903. The item numbers will be the same as Job #4900. All time charges for setting up of the berth prior to arrival will be charged to Job #4903.

In addition, effective immediately there shall be a separate time sheet for the "Nieuw Amsterdam" turned in daily. Any questions regarding time sheets shall be referred to me.

cc: B. Zavin
G. Miller
J. Coleman
N. Calley
A. Dunk
D. Sheridan
J. Gilmore
J. O'Rourke

JOBLIST

Job List

Div	Work Order	Task	Sub Task	Basic Task	Short Title	Title		Sts
N4	900				AMSTERDAM	M/V NIEUW AMSTERDAM	1300-000001	O
N4	900	0001		0001	AMSTERDAM	BERTHAGE (1) CONTRACTOR'S REPAIR FACILITY	1300-000001	O
N4	900	0002		0002	AMSTERDAM	BERTHAGE SERVICES	1300-000001	O
N4	900	0003		0003	AMSTERDAM	COLD FRESH WATER PIPING	1300-000001	O
N4	900	0004		0004	AMSTERDAM	COMPUTER CABLE	1300-000001	O
N4	900	0005		0005	AMSTERDAM	POTABLE WATER MANIFOLDS	1300-000001	O
N4	900	0006		0006	AMSTERDAM	TRANSFERABLE BEDS	1300-000001	O
N4	900	0007		0007	AMSTERDAM	PASSENGER CABIN BATHROOM WALL GROUTING	1300-000001	O
N4	900	0008		0008	AMSTERDAM	CO2 SYSTEM	1300-000001	O
N4	900	0009		0009	AMSTERDAM	HALON SYSTEM	1300-000001	O
N4	900	0010		0010	AMSTERDAM	FIRE EXTINGUISHERS	1300-000001	O
N4	900	0011		0011	AMSTERDAM	FLOOR REPAIR	1300-000001	O
N4	900	0012		0012	AMSTERDAM	COLD SURGE WATER LINE-CO2 ROOM	1300-000001	O
N4	900	0013		0013	AMSTERDAM	LIFEBOAT INSPECTIONS	1300-000001	O
N4	900	0014		0014	AMSTERDAM	LIFEBOAT DAVITS	1300-000001	O
N4	900	0015		0015	AMSTERDAM	HANDICAPPED CABINS	1300-000001	O
N4	900	0016		0016	AMSTERDAM	CABIN PORTHOLES	1300-000001	O
N4	900	0017		0017	AMSTERDAM	CABIN BATHROOM	1300-000001	O
N4	900	0018		0018	AMSTERDAM	HOT WATER PIPE - CASINO	1300-000001	O
N4	900	0019		0019	AMSTERDAM	DANCE FLOORS	1300-000001	O
N4	900	0020		0020	AMSTERDAM	IDENTIFICATION SIGNS	1300-000001	O
N4	900	0021		0021	AMSTERDAM	CONVECTION OVENS - MAIN KITCHEN	1300-000001	O
N4	900	0022		0022	AMSTERDAM	HOT PLATES - MAIN KITCHEN	1300-000001	O
N4	900	0023		0023	AMSTERDAM	MOORING/WINDLASS BRACE BANDS	1300-000001	O
N4	900	0024		0024	AMSTERDAM	PASSENGER CABIN BATHROOM FLOOR GROUTING	1300-000001	O
N4	900	0025		0025	AMSTERDAM	FAN DUCTING	1300-000001	O
N4	900	0026		0026	AMSTERDAM	AIR VENT	1300-000001	O
N4	900	0027		0027	AMSTERDAM	STBD MAIN ENGINE STEP GEAR ALIGNMENT CHECK	1300-000001	O
N4	900	0028		0028	AMSTERDAM	TANK TOP PENETRATIONS D.B. F.O. TANK	1300-000001	O
N4	900	0029		0029	AMSTERDAM	TANK TOP PENETRATIONS D.B. F.O. TANK	1300-000001	O
N4	900	0030		0030	AMSTERDAM	P & S OIL FIRED BOILER BLOW DOWN VALVES	1300-000001	O
N4	900	0031		0031	AMSTERDAM	BALLAST TANK #5	1300-000001	O
N4	900	0032		0032	AMSTERDAM	CROSSOVER	1300-000001	O
N4	900	0033		0033	AMSTERDAM	SHIP'S STORE	1300-000001	O
N4	900	0034		0034	AMSTERDAM	OWNER-FURNISHED MATL	1300-000001	O
N4	900	0035		0035	AMSTERDAM	SUPPORT LABOR	1300-000001	O
N4	900	UNK		UNK	AMSTERDAM	UNKNOWN	1300-000001	O

MV NIEUW AMSTERDAM

JOB NO. 4903

Item No.

22-A. HOT PLATES - MAIN KITCHEN (12)

Furnish labor and material to convert the two (2) tilt fryers from 440 volt wiring and circuits to 220 volt wiring and circuits.

a. Re-strap the element hook-up.

b. Furnish approximately thirty (30) ft. of No. 6/3 wire and rewire the internal power circuits.

c. Exchange the contacts with Owner-furnished 220 volt contacts.

d. Modify the control circuits to 220 volts.

e. Furnish and install stainless steel junction boxes and sheet metal cable covers to extend the power cables to the two (2) units.

66. PORT BOILER

Furnish labor and material to assist the ship's electrician in trouble shooting the port boiler operation. Remove and test external sensors and electronic control modules. Bypass the shut down circuits to determine cause of malfunctions.

Note: Substitute fuel appears to be the problem.

Item No.

8-A. CO_2 SYSTEM (18)

Furnish labor and material to furnish and install four hundred (400) inspection tags.

10-A. FIRE EXTINGUISHERS (20)

Furnish labor and material to accomplish the additional work in conjunction with the portable fire extinguisher inspection.

Purchase Five (5) 5# ABC extinguishers
Seventeen (17) 5# Univessle brackets
Two (2) 2-1/2# Halon extinguishers

Recharge One (1) 15# CO_2 extinguishers
One (1) 2-1/2" Halon extinguisher

64. NO. 1 LIFEBOAT DAVIT BRAKES (REWRITE OF ITEM)

Furnish labor and material to transport two (2) brake shoe assemblies to shop; assemblies previously removed by crew.

Using existing shoes as a pattern, fabricate by milling and machining two (2) new brake shoes from 1-3/4" x 8" x 4" aluminum plate each. Assemble the centrifugal brake assembly and transport to the vessel. Reassemble the boat winch and prove operating correctly.

NOTE: This item cancels original Item No. 64 and furnishes **new title and rewrite**.

65. LIDO DISHWASHING COUNTER

Furnish labor and material to furnish and install a water barrier along the athwartship aft dishwashing room counter adjacent to the hinged fore and aft counter. The barrier to be an inverted "U" shaped extrusion approximately two (2) ft. long x 1" high and 1/2" wide at the base. Weld to the counter top and polish weld and counter top upon completion.

4900

NORTHWEST MARINE IRON WORKS
NIEUW AMSTERDAM
BUDGET SUMMARY

ITEM NO.	DESCRIPTION	BUDGET TTL HOURS	PREM HRS	MAT'LS	SUBS	POP TARIF
1	BERTHAGE (6 DAYS)	0	0	0	0	3,804
2	SERVICES	860	187	412	4,375	19,146
3	COLD WATER LINES	6978	3175	58,043	0	0
4	COMPUTER CABLE	3592	1940	10,028	0	0
5	POTABLE WATER MANIFO	0	0	0	0	0
6	TRANSFERRABLE BERTHS	174	86	534	1,689	0
7	BATHROOM/SHOWER WALL	0	0	0	4,979	0
8	CO2 SYSTEM	0	0	0	280	0
9	HALON SYSTEM	0	0	0	280	0
10	FIRE EXTINGUISHERS	0	0	0	280	0
11	TILE DECK FLOORS	68	0	150	4,110	0
12	COLD SURGE WATER LIN	65	0	216	15	0
13	LIFE BOATS (4)	158	0	192	0	0
14	LFE BOAT DAVITS (4)	965	520	1,924	0	0
15	HANDICAPPED CABINS	1280	691	1,863	11,760	0
16	WINDOWS & PORTHOLES	0	0	0	0	0
17	BATHROOM FLOOR REPAI	169	0	776	1,800	0
18	PIPE LINES	43	0	70	0	0
19	DANCE FLOORS	102	0	261	12,220	0
20	GOLD LEAF LETTERING	108	0	300	0	0
21	KITCHEN REPAIRS	135	0	340	0	0
22	KITCHEN REPAIRS	353	117	1,728	234	0
23	MOORING WINDLASS	86	0	144	900	0
24	BATHROOM/SHOWER FLOO	0	0	0	3,260	0
25	FAN DUCT	61	0	178	0	0

NORTHWEST MARINE IRON WORKS
NIEUW AMSTERDAM
BUDGET SUMMARY

ITEM NO.	DESCRIPTION	BUDGET TTL HOURS	PREM HRS	MAT'LS	SUBS	POP TARIF
26	AIR VENTS	11	0	24	0	0
27	STARBOARD STEP-UP GE	50	0	96	0	0
28	TANK TOP PENETRATION	662	333	1,678	75	476
29	TANK TOP PENETRATION	446	240	1,168	75	260
30	BLOW DOWN VALVES P/S	7	0	26	600	0
31	BALLAST TANK NO. 5	22	0	48	75	0
31A	RENEW ZINCS	0	0	0	0	0
32	CROSS OVERS	158	0	352	150	0
32A	RENEW ZINCS	0	0	0	0	0
33	SHIP STORES	0	0	0	0	0
34	WAREHOUSE HANDLING O	86	22	100	0	0
35	SUPPORT LABOR	346	115	0	0	0
		16984	7427	80,651	47,157	23,686

MV NIEUW AMSTERDAM

JOB NO. 4900

T&M

TABLE OF CONTENTS
FOR
M/V NIEUW AMSTERDAM
JOB NO. ~~4900~~ 4903

April 24, 1989

ITEM NO.	TITLE
1.	BERTHAGE (1) CONTRACTOR'S REPAIR FACILITY
2.	BERTHAGE SERVICES (1)
3.	COLD FRESH WATER PIPING (6)
4.	COMPUTER CABLE (30)
5.	POTABLE WATER MANIFOLDS (14)
6.	TRANSFERABLE BEDS (31) (HOLD) Cancelled
7.	PASSENGER CABIN BATHROOM WALL GROUTING (27)
8.	CO_2 SYSTEM (18)
9.	HALON SYSTEM (19)
10.	FIRE EXTINGUISHERS (20)
11.	FLOOR REPAIR (29)
12.	COLD SURGE WATER LINE-CO_2 ROOM (8)
13.	LIFEBOAT INSPECTIONS (21)
14.	LIFEBOAT DAVITS (22)
15.	HANDICAPPED CABINS (23)
16.	CABIN PORTHOLES (24)
17.	CABIN BATHROOM STEEL FLOORS (25)
18.	HOT WATER PIPE - CASINO (7)
19.	DANCE FLOORS (17)
20.	IDENTIFICATION SIGNS (28)

TABLE OF CONTENTS
FOR

M/V NIEUW AMSTERDAM
JOB NO. 4900

April 24, 1989

ITEM NO.	TITLE
21.	CONVECTION OVENS - MAIN KITCHEN (11)
22.	HOT PLATES - MAIN KITCHEN (12)
23.	MOORING/WINDLASS BRACE BANDS (15)
24.	PASSENGER CABIN BATHROOM FLOOR GROUTING (26)
25.	FAN DUCTING (3)
26.	AIR VENT (16)
27.	STARBOARD MAIN ENGINE STEP GEAR ALIGNMENT CHECK (13)
28.	TANK TOP PENETRATIONS DOUBLE BOTTOM FUEL OIL TANK 1016 (10)
29.	TANK TOP PENETRATIONS DOUBLE BOTTOM FUEL OIL TANK 1015 (9)
30. Cancelled	PORT AND STARBOARD OIL FIRED BOILER BLOW DOWN VALVES (5)
31.	BALLAST TANK NO. 5 (4)
32.	CROSSOVER (2)
33.	SHIP'S STORE
34.	OWNER-FURNISHED MATERIAL
35.	SUPPORT LABOR

Item No.
1. **BERTHAGE (1) CONTRACTOR'S REPAIR FACILITY**

Furnish the safe working berth at contractor's facility Berth 304, for the duration of repair availability, May 17 to 22, 1989.

Item No.
2. **BERTHAGE SERVICES (1)**

Provide labor, material and equipment to connect, maintain, and disconnect and remove upon completion, the following services.

A. Line handler upon arrival and departure
B. Gangways
C. Crane services
D. Crane rigging services
E. Condensate line
F. Fire protection - three (3) 2-1/2" hoses, one each connected fwd, midships, and one aft.
G. Potable water - two (2) 2-1/2" hoses
H. Telephones - one (1) unrestricted on bridge with two (2) keys, two (2) restricted phones, one at gangway, and one at control room.
I. Pay telephones - two (2) located at "B" deck break.
J. Steam supply - one (1) 2-1/2 connection with filter
K. Gas free certificate for all areas requiring hot work.
L. Fire watch
M. Compressed air
N. Sewage disposal
O. Garbage disposal

Item No.

3. **COLD FRESH WATER PIPING (6)**

Furnish labor and material to remove and renew approximately one thousand five hundred feet (1500) feet of 1-1/2" galvanized main cold fresh water piping to the upper section loop using 1-1/2" copper nickel piping and fittings.

Remove and reinstall all interferences including paneling, lighting fixtures and insulation.

Remove and replace with new, the piping from the stabilizer room and the coolers up through the upper forward loop; (existing galvanized pipe only)

Fabricate, insulate and install in existing hangers the new copper nickel pipe.

Flush and prove piping free from leaks upon completion.

Item No.

4. **COMPUTER CABLE (30)**

Furnish labor and material to remove necessary overhead and wall panels to install approximately seven thousand two hundred ninety (7,290) feet of 8-conductor cable. Provide and install a total of approximately nine hundred fifty-two (952) feet of 110 volt electrical cable and necessary receptacles.

New computer cable is to be connected to new computer by Owner-furnished Representative. Provide and install all necessary MCTs for penetrations through water tight bulkheads and decks.

Route the cables to the following locations.

CABLE ROUTING

Shore Excursion Office

Terminals located under counter and on desk. Thirty (30) feet of cable estimated inside office to storage locker in office at frame 165. Cables to run down through MCT in locker to beauty parlor on main deck and into computer room approximately forty (40) feet. Inside computer room would take twenty (20 ft.) to reach all areas. This is ninety (90) feet total for each run and four (4) each cables are requested, a total three hundred sixty (360) feet.

Henry's Bar

Terminal location, aft end of back bar frame 139. Cable runs under counter fwd to frame 147 Linde, 115 volt outlet, and into pantry under sink. This is approximately twenty (20) feet, run cable up to overhead under stainless conduit. Inside overhead run fwd to piping change about frame 155 and fwd to shore excursion office locker and down to MCT, into the beauty parlor. This is one hundred ten (110) feet plus twenty (20) feet inside computer room. A total of one hundred fifty (150) feet for each run and two (2) each cables requested, total three hundred (300) feet.

Photo Lab

Terminal location not known. Estimate twenty (20) feet of cable in lab area. Cable runs out to passage way at frame 53 on boat deck and fun fwd to pipe locker at frame 113 (Stateroom 134), then down to upper Prom Deck passage and forward to elevator at frame 171. Enter shaft through MCT or pipe and down shaft to main deck. Exit shaft through MCT to barber shop, run aft through beauty parlor to frame 163 and into computer room. Total cable length is four hundred and fifty (450) feet.

Continued

Item No.

4. COMPUTER CABLE (30) (CONTINUED)

Print Shop

Terminal location not known. Estimate twenty (20) feet of cable in shop. Cable run same as photo lab. Total cable length is four hundred thirty five (435) feet.

Deck Department

Terminal location aft bulkhead requires eighteen (18) feet of cable in space. Cable run through overhead at frame 184 of Nav Deck into passage way. Run aft in overhead through MCT at frame 176 and aft to frame 173. Enter elevator shaft through MCT and down to main deck. Run out through MCT into barber shop, aft through beauty shop and into computer room. Total cable length is two hundred (200) feet.

Captain Cabin

Terminal location not known. Estimate twenty (20) feet of cable in cabin. Run from overhead at frame 190 and into passage way. Cable route same as deck office. Total cable length two hundred twenty (220) feet.

First Officer

Terminal location not known. Estimate twenty (20) feet of cable in cabin. Run from overhead at frame 181 and into passage way. Cable route same as deck office. Total cable length two hundred and ten (210) feet.

Chief Engineer

Exact terminal location not known. Estimate twenty (20 ft.) of cable in office. Run from overhead at frame 181 and into passage way. Cable route same as deck office. Total cable length one hundred ninety-five (195) feet.

Radio Station

Terminal locations not known. Estimate twenty (20) feet of cable in office for each terminal. Run from overhead out to passageway at frame 180. Follow same cable route as deck office. Total cable length for each run is two hundred (200) feet and three (3) cables are requested, total six hundred (600) feet.

Cruise Director

Estimate sixteen (16) feet cable inside office. Run out to stbd passageway at frame 177 main deck and aft through fire barrier frame one hundred seventy-six (176) through pipe, continue aft to frame 163 and into computer room. Total cable length eighty (80) feet.

Continued

Item No.

4. COMPUTER CABLE (30) (CONTINUED)

Maitre d'

Estimate sixteen (16) feet cable in office. Run out to passage at frame 165, down passage to frame 163 and into computer room; total cable length fifty (50) feet.

Purser

Estimate sixteen (16) feet cable in office. Run fwd to computer room in overhead to frame 163; total cable length thirty-five (35) feet.

Front Office

Terminals located under counter, one (1) port and one (1) stbd. Run cable under counter to port bulkhead and up to overhead of housekeeper office. Run fwd through food and beverage office into beauty parlor to frame 163 then into computer room. Cable length for stbd terminals is one hundred fifteen (115) feet and port terminals is one hundred five (105) feet. Total cables two hundred twenty (220) feet.

Food and Beverage Office

Terminal location not known. Estimate sixteen (16) feet cable in office, run in overhead fwd to beauty parlor frame to 163 and into computer room. Total cable seventy-five (75) feet.

Housekeeper

Terminal location not known. Estimate sixteen (16) feet cable in office, run in overhead fwd through food and beverage office and beauty parlor to frame 163 then into computer room. Total cable ninety (90) feet.

Beverage Manager

Terminal location not known. Estimate sixteen (16) feet cable in office. Cable run in overhead fwd through entrance, over gents head, over hotel manager's office, over entrance at frame 147 and into store room M-7. Run to port and frame 151 into locker to stbd passage. Run fwd down passage through MCT at fire boundary frame 152 up to frame 163 and into computer room. Total cable one hundred forty-five (145) feet.

Hotel Manager

Terminal location not known. Estimate twenty-four (24) feet cable in office. Run cable in overhead and use same route as beverage manager. Total cable is one hundred fifteen (115) feet.

Continued

Item No.

4. COMPUTER CABLE (30) (CONTINUED)

Dining Room

Terminal location on fwd counter stbd side estimate eight (8) feet cable in dining room. Run cable through pipe in fire boundary frame 127 into service stairwell then down to "A" deck. Continue through pipe at fire boundary to stbd passage. Run fwd in overhead to frame 151 then up through pipe into locker on main deck to overhead. Run to stbd passage through MCT at frame 152 then fwd to frame 163 and into computer room. Total cable one hundred forty-five (145) feet.

P. O. Bar

Possible terminal location is back bar outboard side. Run cable up to overhead and inboard to crew bar. Run down bulkhead at frame 14 through pipe into A-1 fan room on "4" deck. Run aft in overhead to fwd bulkhead frame 23 and down through a pipe to "B" deck sally port. Run through MCT at fire boundary, fwd in center passage way to frame 47. Go through MCT into engine room, then to Port Engineer's room bulkhead. Run to frame 58 through MCT to port passage way. Run fwd in overhead to fire boundary frame 71, through MCT and continue fwd to fire boundary frame one hundred twenty-seven (127) through MCT. Continue fwd to frame 172 and into fan room through MCT. Run through fan room into elevator shaft through MCT. Go up elevator shaft to main deck, through MCT into barber shop. Run aft through beauty parlor to frame 163 and into computer room. Total cable five hundred seventy (570) feet.

Crew Bar

Terminal location not known. Estimate twenty (20) feet inside bar area. Run cable fwd to frame 14 and follow same route as P. O. Bar. Total cable five hundred twenty (520) feet.

Provision Office

Terminal location not known, estimate sixteen (16) feet inside office. Run cable aft through fire boundary in pipe at frame 23 then to MCT as same frame to center passage way. Follow same route fwd as P. O. Bar. Total cable five hundred (500) feet.

Engine Room Office

Terminal location not known. Estimate eight (8) feet inside office. Run cable down through pipe into engine room "B" deck level. Follow cableway on aft bulkhead to port side. Run same route fwd as P. O. Bar. Total cable four hundred eighty (480) feet.

Continued

Item No.

4. COMPUTER CABLE (30) (CONTINUED)

Wine Room

Terminal location not known. Estimate twenty (20) feet inside room. Run cable down through pipe into engine room and to cable run centerline of engine room. Run aft and down bulkhead to "B" deck level. Follow same route as P. O. Bar. Total cable four hundred ninety (490) feet.

Executive Chef

Terminal location inboard bulkhead. Estimate eight (8) feet inside office. Run cable down to engine room through pipe and follow same route for wine room and P. O. Bar. Total cable four hundred ninety (490) feet.

Laundry

Terminal location by clean linen window. Estimate twenty (20) feet inside laundry. Run cable up to overhead and through pipe into fan room. Run fwd to frame 130 then inboard through pipe into service elevator shaft. Go up shaft to "B" deck level through pipe into service passage. Turn to port and through pipe to port passage way at frame 128. Run fwd to frame 172 and enter MCT to fan room. Continue to MCT into elevator shaft and go up to main deck level. Run through MCT into barber shop, aft through beauty parlor to frame 163 and into computer room. Total cable two hundred seventy-five (275) feet.

Controller

As this is located in the computer room, estimate twenty (20) feet per run. There are two (2) runs required for a total of forty (40) feet.

These cable lengths may change if there are unforeseen obstacles to go around. Total 8-conductor cable estimate is seven thousand two hundred ninety (7,290) feet. This should have 10% added for safety.

OVERHEAD REMOVALS

The following overhead does not include overhead removed for piping.

Nav Deck

Passage from frame 171 to frame 195. Some overhead in deck office, hotel manager, captain, chief officer, chief engineer and radio office to terminal locations.

Continued

Item No.

4. COMPUTER CABLE (30) (CONTINUED)

Boat Deck
Removals in photo lab and print shop to terminals.

Prom Deck
Approximately from frame 155 in Henry's Bar to pantry and inside pantry. Also in excursion office.

Main Deck
Stbd passage frame 180 to frame 150. Some overhead in cruise director, Maitre d', purser, barber shop, beauty parlor, food and beverage office, housekeeper and computer room. Also overhead in locker frame 150 stbd, M-7 storeroom, stbd entrance fwd, gents room, hotel manager, stbd entrance aft and beverage manager office.

Frame 15 overhead in P. O. Bar to stbd bulkhead and crew bar fwd to terminal.

"A" Deck
Stbd passage frame 174 to frame 162 inside stateroom No. 457. This is for 125 amp cable to computer room. Stbd passage frame 152 aft to frame 127.

"B" Deck
Port passage frame 116 aft to frame 58 center passage frame 47 aft to frame 23 sally port from provision office to carpenter shop port passage frame 172 aft to frame 169.

"E" Deck
Clean linen room fwd inboard corner.

Joiner Work
Some joiner work in each room may be required for cable runs down to terminals.

115 VOLT POWER (TSGU-4)

Dining Room	250 feet
BSM	85 feet
Hotel Manager	125 feet
PSM	92 feet
Cruise Director	70 feet
Storekeeper	100 feet
Maitre d'	30 feet
Extensions for Rooms/110 V Avail	200 feet
Total	952 feet

Continued

Item No.

4. **COMPUTER CABLE (30) (CONTINUED)**

Receptacles?

115 volt power from sub-station 4 to computer room 125 amp (TSGU-25) 85 feet

Power panel with two (2) each 50 amp breakers and TSGU-23 to each main frame.

MCT FRAMES

Nav Frames	2 each	7 Cables	8 Cond	RGS-2
4 Prom	2 each	8 Cables	8 Cond	RGS-2
Main Deck	1 each	21 Cables	8 Cond	RGS-2
"B" Deck	2 each	7 Cables	8 Cond	RGS-2
	3 each	6 Cables	8 Cond	RGS-2
	2 each	3 Cables	8 Cond	RGS-2
	12 each	(11 each RGS-2/1 each RGS-4)		

When complete reinstall all removed overhead and wall panels.

Item No.
5. **POTABLE WATER MANIFOLDS (14)**

Furnish labor and material to renew the potable water manifolds as directed by Owner's Representative.

Item No.
6. **TRANSFERABLE BEDS (31) (HOLD)**

Furnish labor and material to change fixed beds to transferable beds in passenger cabins as directed by Owner's Representative.

Item No.
7. **PASSENGER CABIN BATHROOM WALL GROUTING (27)**

Furnish labor and material to repair the grouting in the following passenger cabin bathroom/shower walls:

014, 123, 131, 302, 308, 316, 320, 322, 328, 332, 336, 338, 345, 348, 350, 352, 354, 358, 366, 367, 369, 424, 428, 429, 433, 440, 448, 449, 451, 460, 463, 471, 477, 480, 484, 494, 497, 513, 515, 533, 554, 558, 561, 601, 608, 634, 638, 656, 667, 675, 678, 679, 680, 688, 689, 690, 693, 710, 712, 802, 827, 864, 871, 892, 893, 895, 896, 898, 903.

Item No.
8. **CO_2 SYSTEM (18)**

Furnish labor and material to inspect CO_2 system for re-certification.

Item No.
9. **HALON SYSTEM (19)**

Furnish labor and material to inspect and recertify the halon system for:

1. Separator Room
2. Incinerator Room
3. Paint Storage
4. Vent Duct "B" Deck Pantry
5. Vent Duct Main Deck Galley
6. Vent Hood Lido Pantry

Item No.
10. **FIRE EXTINGUISHERS (20)**

Furnish labor and material to inspect and recertify the following fire extinguishers:

1 pc.	136 liter	wheeled foam unit
28 pcs.	6kg	CO_2 fire extinguishers
6 pcs.	2kg	CO_2 fire extinguishers
8 pcs.	2kg	powder fire extinguishers
16 pcs.	5 lbs.	powder fire extinguishers
4 pcs.	3 lbs.	Halon fire extinguishers
2 pcs.	2 lbs.	Halon fire extinguishers

Item No.
11. **FLOOR REPAIR (29)**

Furnish labor and material to repair the damaged floor and retile when complete. Chip away all tile and underlayment as necessary to repair deck. Repair underlayments and retile using contractor furnished material.

The following locations are effected:

a. Men's toilet outside upper Prom aft
b. Men's sauna dressing room – Navigation deck
c. Pantry Explorer's lounge

NOTE: Water under tiles in b. and c. and steel deck repairs will be carried out under an additional item.

Item No.
12. **COLD SURGE WATER LINE-CO_2 ROOM (8)**

Furnish labor and material to renew a section of cold surge water line located in CO_2 room on boat deck.

Remove bulkhead and overhead panels inside of CO_2 room as necessary as well as a fan room louver located on starboard side, outside on fwd tender boat work platform.

Remove and renew the 2" x 8 ft. section of pipe. Test to prove tight.

When complete replace all removed interferences.

Item No.
13. **LIFEBOAT INSPECTIONS (21)**

Furnish labor, material and equipment to inspect Nos. 1, 2, 3, and 4 lifeboats. Rig boats from ship to shore, and support boats with appropriate cribbing. Remove interior panels to expose suspension plates. Upon completion of inspection by Owner's Representative and regulatory bodies, reinstall all removed interferences and restow boats onboard.

Item No.
14. **LIFEBOAT DAVITS (22)**

Furnish labor, material and equipment including staging to inspect the davits for Nos. 1, 2, 3, and 4 lifeboats. Provide as required skate roller removal access slots and rig skates from ship to shop. Open out, clean, measure, and inspect all sheaves and rollers. Submit a report to Owner's Representative of existing clearances and conditions found. When directed by Owner's Representative reassemble sheaves and rollers and reinstall skates as original. Close skate roller access plates and repair coatings as original. Repairs, if any, will be accomplished under a separate item.

Item No.
15. **HANDICAPPED CABINS (23)**

Furnish labor and material to install handicapped bathrooms in passenger cabin Nos. 100, 101, 102 and 103 in accordance with drawing No. 0-10-208 and Owner-furnished drawings – location (9/13/88 – (9/14/88).

Furnish and install protection for deck covering and walls in the four (4) cabins and adjacent passageways.

Remove the tubs, W.Cs., lavatory and counter, showers, fixtures and fittings.
NOTE: All new panels, fittings, tile and carpet pieces are Owner-furnished.

Remove, modify and install wall panels in cabins and relocate the entrance doors to cabins Nos. 102 and 103. Remove, modify and install wall panels as necessary in cabin Nos. 101 and 100. Remove and modify ceiling panels in cabins as indicated.

Remove the wardrobe closets in cabin Nos. 102 and 103 and relocate as indicated in drawing but interchange cabins to allow use of existing panels.

Remove all existing bathroom wall panels and ceiling panels.
NOTE: Remove and reinstall ceiling panels in cabins below boat deck in way of work for access to deck as necessary.

Receive all Owner-furnished material and install bathroom wall panels, ceiling panels, deck panels and all W.Cs., lavatory units, shower units, bars and shower curtains.

Furnish material as required and connect drains, sewage, flush lines, hot and cold water lines and insulate as original. Connect all electrical fixtures and devices from existing sources and reuse ceiling fixtures.

Install necessary underlayment and install Owner-furnished bathroom deck and wall tile, (make bathrooms available for tiling as soon as possible).

Leave spaces clean and ensure all equipment is operable upon completion.

Item No.
16. **CABIN PORTHOLES (24)**

Furnish labor, material and equipment to remove designated cabin porthole, frames, seals and porthole glasses. Clean out frame sealing areas and install new Owner–furnished sealing material and install the porthole glass as original. Dress the sealing material neatly around the internal and external edges of the glass frame. Replace any damaged studs or screws. Protect adjacent areas from being soiled or damaged.

When complete, hose test the repaired portholes for Owner's Representative and regulatory bodies.

The designated cabins are:

Boat Deck	147
Upper Prom. Deck	211, 214, 218, 222, 224, 228
Main Deck	320, 333, 337, 344
A Deck	460, 480, 482, 484, 486, 496, 520, 548, 558
B Deck	628, 629, 636, 640, 652, 654, 656, 660, 664, 668, 675, 680, 687, 688 692, 706, 714
C Deck	814, 844, 870, 878, 882, 886, 890 898, 902, 857, 861, 901

NOTE: Cabin Nos. 147 through 228 are 21" x 30" windows at two (2) per cabin.
Cabin Nos. 320 through 344 are 21" x 30" windows at one (1) per cabin.
Cabin Nos. 460 through 901 are 15" portholes at one (1) per cabin.

Item No.
17. **CABIN BATHROOM STEEL FLOORS (25)**

Furnish labor and material to install a new metal floor in the bathroom/shower and retile afterwards in the following passenger cabins.

a)	Cabin No. 127	Shower floor (Boat)
b)	Cabin No. 129	Shower floor (Boat)
c)	Cabin No. 147	Bathroom floor (Boat)
c)	Cabin No. 225	Bathroom floor (UP)

Item No.

16-A. CABIN PORTHOLES

Cancel:
All work on the portholes and windows in the following listed cabins is canceled.

Boat Deck	147
Upper Promenade Deck	211, 214, 218, 222, 224, 228
Main Deck	320, 333, 337

Additional portholes:
Accomplish work to reseal the additional portholes in the following listed cabins.
Nos. 873, 639, 700, 877, 704, 881, 885, 897, 821 and 867

Item No.
18. **HOT WATER PIPE - CASINO (7)**

Furnish labor and material to renew a section of hot water pipe located above overhead panels in Casino. Remove overhead panels as necessary to gain access. Remove and renew the 12mm x 2 feet of copper pipe.

Test pipe to prove tight and reinstall overhead panels.

Item No.
19. **DANCE FLOORS (17)**

a) Furnish labor and material to remove the top layer of wood flooring including border (Pear Tree Lounge) on the dance floors in the Pear Tree Lounge and the Henry Hudson Lounge, being careful **not** to damage plywood sub floor. Clean sub floor and furnish and install white oak flooring on the Pear Tree Lounge dance floor and teak wood flooring on the Henry Hudson dance floor. Sand and varnish floors using three (3) coats of moisture curing Urethane varnish.

b) Furnish labor and material to sand and varnish the dance and stage floors in the Stuyvesant lounge using three (3) coats of moisture curing Urethane varnish.

Furnish protection for adjacent carpeting and remove upon completion.

Item No.
20. **IDENTIFICATION SIGNS (28)**

Furnish labor and material to renew or repair the blue/gold lettering in the following areas.

a) Front and back doors of Pear Tree Club and Partridge Bar (UP)
b) Entrance door to Hudson Lounge (Prom) forward port side
c) One (1) back entrance door to (Prom) Stuyvesant Lounge
d) "Lido" sign on four (4) glass (Prom) windows of Lido Restaurant.

Item No.
21. **CONVECTION OVENS - MAIN KITCHEN (11)**

Furnish labor and material to renew the three (3) convection ovens located in main kitchen. Disconnect electrical from foundations and dispose of the three (3) existing convection ovens.

Rig in and set in place three (3) new Owner-furnished convection ovens. Reconnect electrical and prove operational.

Item No.
22. **HOT PLATES - MAIN KITCHEN (12)**

Furnish labor and material to remove one (1) oven/hot plate unit and two (2) tilt fryer units now existing in a line from forward to aft (hot plate, tilt fryer and tilt fryer) to scrap.

Take delivery and install one (1) new hot plate unit and two (2) new tilt fryer units furnished by Owner's in a line forward to aft (tilt fryer, tilt fryer and hot plate unit).

Modify all connections as to new positions and extend deck drain to new positioned tilt fryer similar to existing installation. Furnish and install stainless steel strainer pieces.

Repair the under layment and deck tiles as necessary.

Item No.
23. **MOORING/WINDLASS BRACE BANDS (15)**

Furnish labor, material and equipment to renew brace band linings on the port and starboard mooring windlasses. Disconnect lineages and rig bands to the shop. Remove existing lining and rivits, and clean in way of renewals. Install new Owner-furnished lining and rivets. Reinstall bands, connect and adjust lineage.

Item No.
24. **PASSENGER CABIN BATHROOM FLOOR GROUTING (26)**

Furnish labor and material to repair grouting in the following passenger cabin bathroom/ shower floors:

300, 314, 316, 320, 321, 322, 324, 326, 328, 332, 334, 336, 338, 345, 348, 350, 351, 352, 357, 401, 403, 411, 415, 417, 419, 441, 445, 448, 463, 486, 489, 492, 493, 494, 496, 497, 499, 501, 505, 506, 509, 510, 511, 512, 513, 515, 516, 517, 518, 521, 522, 525, 531, 534, 536, 537, 538, 539, 540, 542, 543, 546, 548, 550, 552, 555, 558, 560, 561, 603, 608, 609, 632, 634, 640, 649, 651, 653, 656, 662, 664, 666, 667, 668, 669, 670, 672, 676, 679, 682, 683, 684, 685, 693, 702, 705, 710, 711, 712, 807, 819, 827, 828, 839, 840, 841, 849, 855, 864, 865, 868, 872, 873, 882, 889, 892, 898, 899, 900, 902.

Item No.
25. **FAN DUCTING (3)**

Furnish labor, material and equipment to renew a section of eroded vent ducting in fan room A–2. Ducting for renewal is eight (8) ft. long, 15" x 25" rectangular duct with a 45° elbow at one end. Renew ducting from transition elbow to first rivet band. Prime and coat as original.

Item No.
26. **AIR VENT (16)**

Furnish labor and equipment to open out for Lloyd's inspector the ballast tank (ball type) air vent valves. Remove retaining plates and ball. Clean balls and seats for Owner's Representative and Lloyd's Surveyor inspection. Upon completion of inspection close valves as original.

The number and locations will be determined before arrival of the vessel.

Item No.
27. STARBOARD MAIN ENGINE STEP GEAR ALIGNMENT CHECK (13)

Furnish labor and equipment to check the alignment between the starboard main engine step up gear, output shaft, and starboard main generator. Remove required guards and set up dial indicators to read face and rim run outs of Spiro–Flex coupling. Indicator will bridge rubber elements. Submit alignment reading to Owner's Representative and upon approval, reinstall removed interferences.

Item No.
28. TANK TOP PENETRATIONS DOUBLE BOTTOM FUEL OIL TANK 1016 (10)

Furnish labor, material and equipment to renew four (4) leaking tank top penetrations in fuel oil tank 1016. Open out fuel oil tank, pump down remaining oil and clean to achieve gas free certificate. Crop out four (4) 1" steam pipes, two (2) supply and two (2) exhaust for heating coils from manifold valve flanges down into tank approximately one (1) foot. Renew all four (4) pipes and penetration couplings. Conduct as required, tests of new penetrations and close tanks with new gaskets and any required fasteners.

Item No.
29. TANK TOP PENETRATIONS DOUBLE BOTTOM FUEL OIL TANK 1015 (9)

Furnish labor, material and equipment to renew four (4) leaking tank top penetrations in fuel oil tank 1015. Open out fuel oil tank, pump down remaining oil and clean to achieve gas free certificate. Crop out two (2) 1" steam supply pipes for heating coils, from manifold valves into tank approximately one (1) foot. Crop out two (2) 3/4" steam return pipes from manifold valves into tank approximately one (1 ft). Renew all four (4) pipes and penetration couplings. Conduct as required tests of new penetrations and close tank with new gaskets and any required fasteners.

Cancelled

Item No.
30. **PORT AND STARBOARD OIL FIRED BOILER BLOW DOWN VALVES (5)**

Furnish labor and equipment to renew the port and starboard boiler blow down valves with Owner-furnished replacement valves. Supply and coordinate skin divers with valve replacements while vessel is afloat. Prove system tightness to Owner's Representative prior to releasing divers.

Item No.
31. **BALLAST TANK NO. 5 (4)** Cancelled

Furnish labor, material and equipment to renew the zinc anodes in ballast tank No. 5. Open manhole covers and ventilate to achieve "safe for men and fire" chemist's certificate. Illuminate tank as required to replace zinc anodes as directed by Owner's Representative. Touch coating in way of renewals and close tank using new gaskets and required fasteners.

Item No.
32. **CROSSOVERS (2)**

Furnish labor, material and equipment to open out the two (2) sea water crossovers, No. 7004 in stabilizer room and No. 7005 in boiler room. Clean crossovers to allow internal coating inspections by Owner's Representative. Renew all zinc anodes and touch up coating from installations. Close crossover manhole covers with new gaskets and required new fasteners.

Item No.
33. **SHIP'S STORE**

Furnish services of riggers and crane service to assist in loading and stowage of vessel's stores and provisions.

Item No.

32. CROSSOVER (2)

This item is canceled in its entirety.

Item No.
34. **OWNER-FURNISHED MATERIAL**

Furnish labor, material and equipment to receive and store Owner-furnished material and equipment to be used during the vessel's availability period in shipyard. Clear all material/equipment through U.S. Customs.

Deliver material/equipment to vessel when directed. Furnish all fees, freight and transportation charges.

Item No.
35. **SUPPORT LABOR**

Furnish support labor as required during vessel's availability period.

M/S NIEUW AMSTERDAM JOB NO. 4903

Item No.

68 EXTRA CERAMIC TILE $5,989.00

Purchase and deliver additional ceramic tile to the ship for spares.

Subcontractor $5,989.00

Item No.

4 COMPUTER CABLE (30)

Cancel **ONLY** paragraphs under heading **Cable Routing** as listed herein.

Print Shop

Radio Station

Crew Bar

Laundry

Cancel **ONLY** paragraph under heading **Overhead Removals** as listed herein.

"E" Deck

5 POTABLE WATER MANIFOLD (14)

Furnish labor and material to remove and install Owner-furnished potable water manifolds as directed by Owner's Representative.

6. TRANSFERABLE BEDS (31)

Cancel this item in its entirety.

30. PORT AND STBD OIL FIRED BOILER BLOWDOWN VALVES (5)

Cancel this item in its entirety.

36. WALK-IN REFRIGERATOR DOORS MAIN KITCHEN

Furnish labor and material to receive two (2) Owner-furnished walk-in refrigerator doors with frames and install as directed by Owner's Representative.

Remove the existing walk-in refrigerator doors and frames and inspect openings and adjacent insulation and report if in need of repair or replacement. Fit and install new doors with frames as original.

The walk-in refrigerators to be designated by Owner's Representative.

Clean up all debris to leave work area clean upon completion.

Item No.

37. **TILE DECK IN WALK-IN REFRIGERATORS IN MAIN KITCHEN** Cancelled

Furnish labor and material to remove and dispose of the deck tile in the vegetable room and bakery room walk-in refrigerators. Clean underlayment and furnish and install new quarry tile with necessary adhesive and grouting.

NOTE: Repair of underlayment to be covered under separate item.

38. **DISHWASHER TABLE - LIDO DISHWASHING ROOM (Add-2-48)(HOLD)**

Furnish labor and material to reinstall the Lido restaurant dishwashing room clean table as original as directed.

39. **PLEXUS COMPUTER SYSTEM (ADD-2-54)**

Furnish labor and material to install Owner-furnished wiring for Plexus computer system as directed by Owner's Representative.

40. **CREDIT CARD CABLE (ADD-2-54)**

Furnish labor and material to install Owner-furnished cable from the Radio Room to the Promenade Deck for the credit card system. Run cable as directed by Owner's Representative using routes where panel interference is removed for other items in these specifications if practical.

Item No.

38. DISHWASHER TABLE - LIDO DISHWASHING ROOM (ADD-2-48)

This item is canceled in its entirety.

Item No.

41. **CARPET REPLACEMENT**

Furnish labor and material to remove and dispose of the existing carpet. Clean the surface of the underlayment and install new Owner-furnished carpet with necessary adhesive.

NOTE: Repairs to the underlayment will be covered under an additional item

The designated areas are listed herein.

PASSENGER CABINS - TOTAL QUANTITY - FORTY (40) CABINS

GREEN CARPET Stock = Five (5) rolls
Aproximately five hundred (500) yds @ NMIW
Approximately twenty (20) cabins
Five hundred (500) yards ordered 1989
Approximately twenty (20) cabins

SUN DECK

004 (BL)	012 (BL)
005 (B*)	015 (BL)
006 (BR)	018 (BL)
009 (BL)	020 (BR)
011 (BR)	

NAVIGATION DECK

062(B*)	075(B*)
078(BL)	086(BL)

BOAT DECK

102(B*)
125(A1)
143(BR)

UPPER PROMENADE DECK

200(B*)	206(BR*)
211(BL)	212(BL)
218(B1)	225(BR)

MAIN DECK

369(EL)

A DECK PS	A DECK SB
460(EL)	413 (E*)
508(CR)	419(E*)
512(CL)	499(CL)
520(CL)	511(CR)
524(CR)	

*-Indicates "non-standard"

(continued)

Item No.

41. CARPET REPLACEMENT (CONTINUED)

B DECK PS
600(EL)

C DECK PS
844 (EL)
860(CL)
874(CL)

BLUE CARPET — Stock onboard M/S NIEUW AMSTERDAM

BOAT DECK
055 (A2)
120(A2)

A DECK SB
537(DR)

C DECK PS
818(DR)

STAIRCASE STEPS

SOLID BLUE CARPET	Stock	- 9'-2" wide	1-1/2 rolls @ NMIW
		9'-2" wide	1 roll @ N.A.
		12'-0" wide	1/2 roll @ NMIW

MAIN STAIRCASE	CARPET CUTS
NAVIGATION TO SUN DECK (SB)	
Upper and lower stair split	9 Ft. W. x 8.5 Ft. L.
UPPER PROM TO BOAT DECK (PS)	
Upper and lower stair split	9 Ft. W. x 8.5 Ft. L.
C-DECK TO B-DECK	
Upper and lower stair split	9 Ft. W. x 8.5 Ft. L
AFT STAIRCASE	CARPET CUTS
NAVIGATION TO SUN DECK (SB)	
Upper and lower stair split	9 Ft. W. x 8.5 Ft. L.
C-DECK TO B-DECK	
Upper and lower stair split	9 Ft. W. x 8.5 Ft. L
TOTAL BLUE SOLID CARPET REQUIRED	9 FT. W. X 43 Ft. L

(continued)

Item No.

41. CARPET REPLACEMENT (CONTINUED)

STAIRCASE LANDINGS
BLUE 4-SQUARE
CARPET Stock - 500 sq. yds ordered
Note: Half for NO)

MAIN STAIRCASE	CARPET CUTS
NAVIGATION TO SUN DECK Size: 10'-1" W x 6'-2" L	12 Ft. W x 6.5 Ft. L
NAVIGATION TO BOAT DECK Size: 10'-1" W x 6'-0" L	12 Ft. W x 6.0 Ft. L
UPPER PROMENADE TO BOAT DECK(SB) Size: 13'-4" W x 6'-1" L	12 Ft. W x 6.0 Ft. L (plus fill)
"A" DECK TO MAIN DECK Size: 37'-9" W x 11'-0" L	12 Ft. W x 11.0 Ft. L 12 Ft. W x 11.0 Ft. L 12 Ft. W x 11.0 Ft. L (plus fill)

FORWARD STAIRCASE	CARPET CUTS
BOAT TO UPPER PROMENADE DECK Size: 11'-1" W x 6'-9" L	12 Ft. W x 7.0 Ft. L
PROMENADE TO MAIN DECK Size: 16'-7" W x 9'-4" L	12 Ft. W x 9.5 Ft. L 12 Ft. W x 9.5 Ft. L
MAIN TO A DECK Size: 16'-7" W x 8'-2" L	12 Ft. W x 8.5 Ft. L (plus fill)
"A" DECK TO "B" DECK Size: 11'-8" W x 7'-0" L	12 Ft. W x 9.5 Ft. L

AFT STAIRCASE (PS)	CARPET CUTS
BOAT TO UPPER PROMENADE DECK Size: 9'-11" W x 6'-2" L	12 Ft. W x 6.5 Ft. L
UPPER PROMENADE TO PROM. DECK Size: 10'-1" W x 6.0" L	12 Ft. W x 6.0 Ft. L
"A" DECK TO "B" DECK Size: 9'-11" W x 6'-1" L	12 Ft. W x 6.0 Ft. L

AFT STAIRCASE (SB)	CARPET CUTS
UPPER PROMENADE TO PROM. DECK Size: 10'-0" W x 6.3" L	12 Ft. W x 6.5 Ft. L
"A" DECK TO "B" DECK Size: 9'-11" W x 6'-2" L	12 Ft. W x 6.5 Ft. L

(continued)

Item No.

41. CARPET REPLACEMENT (CONTINUED)

"B" DECK TO "C" DECK Size: 9'-11" W x 6'-2" L	12 Ft. W x 6.5 Ft. L
TOTAL BLUE 4-SQUARE CARPET REQUIRED	12 FT. W. x 131 Ft. L

TAN 4-SQUARE
CARPET — Stock - 600 sq. yds ordered
Note: Half for NO)

MAIN STAIRCASE	CARPET CUTS
"A" DECK	12 Ft. W x 14 Ft. L
Size: 38'-9" W x 13'-11" L	12 Ft. W x 14 Ft. L
	12 Ft.. W x 13 Ft. L
"B" DECK	12 Ft. W x 14.5 Ft. L
Size: 38'-9" W x 14'-4" L	12 Ft. W X 14.5 Ft. L
	12 Ft..W x 14.5 Ft. L
	12 Ft. W x 14.5 Ft. L
FORWARD STAIRCASE	CARPET CUTS
NAVIGATION DECK	
Size: 12'-0" W x 8'-2" L	12 Ft. W x 8.5 Ft. L
Size" 6'-10" W x 7'-7" L	12 Ft. W x 8.0 Ft. L
BOAT DECK	
Size 12'-2" W x 8'-6" L	12 Ft. W x 9 Ft. L
Size 6'-10" W x 7'-0" L	12 Ft. W x 7.0 Ft. L
UPPER PROMENADE DECK	
Size 17'-9" W x 8'-10" L	12 Ft. W x 9 Ft. L (plus fill)
Size 14'-10" W x 7'-0" L	12 Ft. W x 7 Ft. L (plus fill)
PROMENADE DECK	12 Ft. W x 10 Ft. L
Size 28'-2" W x 9'-10" L	12 Ft. W x 10 Ft. L
	12 Ft. W x 10 Ft. L
MAIN DECK	12 Ft. W x 9 Ft. L
Size 30'-9" W x 8'-10" L	12 Ft. W x 9 Ft. L

(continued)

Item No.

41. CARPET REPLACEMENT (CONTINUED)

TAN CARPET

AFT STAIRCASE (PS)	CARPET CUTS
"A" DECK	12 Ft. W x 9 Ft. L
Size: 13'-1" W x 7'-8" L	
AFT STAIRCASE (SB)	CARPET CUTS
"A" DECK	12 Ft. W x 9 Ft. L
Size: 13'-1" W x 7'-8" L	
TOTAL TAN 4-SQUARE CARPET REQUIRED	12 FT. W. x 214 Ft. W

RED SOLID CARPET Stock - 300 sq. yds. ordered

MAIN SQUARE	CARPET CUTS
PROMENADE DECK	12 Ft. W x 14.25 Ft. L
Size: 39'-1" W x 14'-1" L	12 Ft. W X 14.25 Ft. L
	12 Ft.. W x 14.25 Ft. L
	12 Ft. W X 14.25 Ft. L
MAIN DECK	12 Ft. W x 14.25 Ft. L
Size: 39'-1" W x 14'-1" L	12 Ft. W X 14.25 Ft. L
	12 Ft.. W x 14.25 Ft. L
	(plus fill)
TOTAL SOLID RED REQUIRED	12 FT. W. X 100 Ft. L

CORRIDORS
BLUE/GREEN LOOP
CARPET Stock - 1000 sq. yds. ordered
(Note: half for NO)

MAIN DECK
UPPER PROMENADE DECK
BOAT DECK

DINING ROOM
RED SWIRL PATTERN
CARPET Stock - 1500 sq. yds. ordered

LIDO INLAY
GREEN/BLUE 4-SQUARE
CARPET Stock - 600 sq. yds. ordered
(Note: half for NO)

Item No.

42 **AUXILIARY GENERATOR L.S. DIESEL ENGINE (ADD-2-45)**

Furnish labor and material to remove and renew the 2" x 1" fuel oil return line on the low speed auxiliary generator diesel engine in way of the starting air assembly. After replacement piping is fabricated and fit properly, remove and pickle to ensure surfaces are clean and install.

Remove and replace insulation as necessary.

43 **STBD MAIN ENGINE (ADD-2-45)**

Furnish labor and material to remove and renew the 2" x 1" fuel oil return line for the starboard main diesel engine in way of the forward port main engine exhaust gas receiver (manifold). After replacement piping is fabricated and fit properly, remove and pickle to ensure surfaces are clean and install.

Remove and replace insulation as necessary.

44 **PORT PROPELLER SHAFT BULKHEAD STUFFING BOX (ADD-2-52) (HOLD)**

Cancelled

Furnish labor andmaterial to repair the port main engine propeller shaft bulkhead stuffing box.

Unbolt and remove the glands and packing assemblies and inspect the stuffing box as to condition and measure alignment and clearances. Reassemble with Owner-furnished packing assemblies as directed.

Repairs will be covered under an additional item.

45 **STBD INCINERATOR HEAT EXCHANGER (ADD-2-55)** Cancelled

Furnish labor and material to remove the existing safety valve on the stbd incinerator heat exchanger (exhaust gas boiler). Remove the existing mounting fitting, fabricate a new 1" fitting and install in the same location. Install Owner-furnished 1" safety valve with new sealing material.

Hydrostatically test the new fittings at 14 b.a.v. (approximately 200 psi) for Lloyds.

Remove and renew insulation as required.

Item No.

46 **PORT INCINERATOR HEAT EXCHANGER (ADD-2-56)** Cancelled

Furnish labor and material to remove the existing safety valve on the port incinerator heat exchanger (exhaust gas boiler). Remove the existing mounting fitting, fabricate a new 1" fitting and install in the same location. Install Owner-furnished 1" safety valve with new sealing material.

Hydrostatically test the new fitting at 14 b.a.v. (approximately 200 psi) for Lloyds.

Remove and renew insulation as required.

47 **DRYDOCK AND DRYDOCK SERVICES**

Furnish labor, material and equipment to drydock vessel on suitable drydock and accomplish repairs as directed by Owner's Representative.

48 **DRYDOCK SERVICES**

Furnish labor, material and equipment to connect and furnish the following services to vessel while on drydock. Disconnect upon completion and prior to vessel's departure.

a. Furnish labor andmaterial to connect and disconnect potable drinking water hose and potable wash water hose.

b. Furnish labor and material to connect and disconnect hoses for supplying the ship with cooling water for AC installation.

c. Furnish labor and material to connect and disconnect hoses for supplying the ship with cooling water for the Cappele diesel engines. **(PRIORITY)**

d. Furnish labor and material to connect and disconnect hoses that will supply the ship with cooling water for the refrigeration system.

e. Furnish labor and matgerial to connect and disconnect the ship onto shoreside supplied steam: 125 lbs/sp".**

f. Furnish labor and material to connect and disconnect a condensate discharge line from drain tank to overboard via a seawater filter.

g. Furnish labor and material to connect and disconnect one (1) unrestricted telephone on bridge with lock and two (2) keys.

(continued)

Item No.
~~46~~
48

PORT INCINERATOR HEAT EXCHANGER (ADD-2-56 (CONTINUED))

h. Furnish labor and material to connect and disconnect fire main system, one (1) on foreship, one (1) midships, and one (1) on aft ship.

i. Furnish labor and material for daily removal of garbage.

j. Furnish labor and material to connect and disconnect sewage system to shore and arrange for removal of sewage during drydocking.

k. Furnish labor and material to handle lines, install and remove two (2) gangways upon arrival, shafts and departures.

l. Furnish tugs to move ship from pier to drydock, from drydock to pier and from pier to stream.

m. Furnish services of marine chemist in order to issue gas free certificates to carry out repairs.

o. To install a temporary bilge water overboard line.

**NOTE: The two (2) main stream connections are:

1. Mainstream supply connection
2. Small line to hot water heater

49 **STBD SHAFT SEAL AND BOOT**

Furnish labor and material to assist the Simplex seal representative with replacement of the stbd outboard shaft seal and boot. Remove the shaft alley coupling guard and loosen the inboard seal securing ring. Furnish and install additional staging and remove the stbd rope guard and reinstall upon completion of repairs. Install rigging in the shaft alley to provide hold back gear. Drain down hub system oil and disconnect one (1) coupling on shaft.

Disconnect the outboard seal, drift the shaft aft 8", disassemble and remove the seal assemblies with boot. Clean and inspect the seal components and reinstall with new seal ring and boot. Restore shafting as original and reinstall all removals. Refill shaft seal system and prove tight.

Item No.

48 DRYDOCK SERVICES (CONTINUED)(REWRITE)

h. Furnish labor and material to connect and disconnect fire main system, one (1) on foreship, one (1) midships, and one (1) on aft ship.

i. Furnish labor and material for daily removal of garbage.

j. Furnish labor and material to connect and disconnect sewage system to shore and arrange for removal of sewage during drydocking.

k. Furnish labor and material to handle lines, install and remove two (2) gangways upon arrival, shafts and departures.

l. Furnish tugs to move ship from pier to drydock, from drydock to pier and from pier to stream.

m. Furnish services of marine chemist in order to issue gas free certificates to carry out repairs.

o. To install a temporary bilge water overboard line.

**NOTE: The two (2) main stream connections are:

1. Mainstream supply connection
2. Small line to hot water heater

49 STBD SHAFT SEAL AND BOOT

Furnish labor and material to assist the Simplex seal representative with replacement of the stbd outboard shaft seal and boot. Remove the shaft alley coupling guard and loosen the inboard seal securing ring. Furnish and install additional staging and remove the stbd rope guard and reinstall upon completion of repairs. Install rigging in the shaft alley to provide hold back gear. Drain down hub system oil and disconnect one (1) coupling on shaft.

Disconnect the outboard seal, drift the shaft aft 8", disassemble and remove the seal assemblies with boot. Clean and inspect the seal components and reinstall with new seal ring and boot. Restore shafting as original and reinstall all removals. Refill shaft seal system and prove tight.

Item No.

31. **BALLAST TANK NO. 5 (4)**

This item is canceled in its entirety.

37. **DECK TILE IN WALK-IN REFRIGERATORS IN MAIN KITCHEN**

This item is canceled in its entirety.

45. **STBD INCINERATOR HEAT EXCHANGER (ADD-2-55)**

This item is canceled in its entirety.

46. **PORT INCINERATOR HEAT EXCHANGER (ADD-2-56)**

This item is canceled in its entirety.

51. **STBD MAIN ENGINE AFT SCAVENGING AIR COOLER (57)**

Furnish labor and material to renew air seal gaskets on the stbd main engine aft scavenging air cooler.

Disconnect the cooling water inlet and outlet piping and remove the aft bolted air seal ring and the forward air seal ring and spacer ring. Slide the tube bundle assembly aft approximately 4" and clean air seal surfaces. Furnish and install new gaskets and new Owner-furnished "O" rings and slide tube assembly back in place. Make up all bolting and reinstall all removals.

52. **PORT MAIN ENGINE AFT SCAVENGING AIR COOLER (58)**

Furnish labor and material to renew air seal gaskets on the port main engine aft scavenging air cooler.

Disconnect the cooling water inlet and outlet piping and remove the aft bolted air seal ring and the forward air seal ring and spacer ring. Slide the tube bundle assembly aft approximately 4" and clean air seal surfaces. Furnish and install new gaskets and new Owner-furnished "O" rings and slide tube assembly back in place. Make up all bolting and reinstall all removals.

Item No.

53. **INSPECT PORT MAIN ENGINE SPIROFLEX COUPLING ELEMENT (78)**

Furnish labor and material to open and inspect the port main engine Spiroflex coupling element.

Remove the coupling expanded metal guards and install rigging.

Remove the Spiroflex coupling to shaft flange bolts, coupling to drive ring bolts and spacer drive sleeve bolts. Back off coupling and remove spacer sleeve halves and move drive ring forward. Clean and inspect all parts and inspect both sides of Spiroflex element as directed.

When directed by Owner's Representative reassemble the coupling in reverse order and torque all bolts as required.

Reinstall all removals as original.

54. **PORT AND STBD LIDO BUFFET COUNTER DECK DRAINS (76)**

Furnish labor and material to renew the deck drain box trap fitting in way of the inside corners of the Lido Buffet counter, port and stbd.

Remove approximately 4' x 8' section of ceiling panel in the King's and Queen's dining room in way of Lido drains and crop out a 10" x 10" section of terrazzo deck covering around the deck drains. Remove the deck box deck trap and approximately four (4) ft. of 2" drain line under deck.

Fabricate a similar box trap and deck drain with 2" pipe spigot using stainless steel material and install flush to the top surface of the steel deck.

Fabricate and install a stainless steel pan approximately 12" x 12" x the height of the deck covering in way of the drains port and stbd and furnish and install a stainless steel perforated cover strainer.

Fabricate and install approximately four (4) ft. of 2" piping from the box trap to the existing drain piping using a union at the trap and a Dresser coupling at the drain pipe.

Seal the deck covering to the deck drain pan.

Reinstall all removals upon completion.

Item No.

55. **PORT STEAM EVAPORATOR SHELL (79)**

Furnish labor and material to repair three (3) 4" cracks in way of the top inboard surface of the copper nickel sheet of the port steam evaporator.

Clean the surface of the shell with power sander wheel, drill stopper holes and seal cracks by brazing.

NOTE: This will require a small person because of space to work.

56. **BILGE WATER SEPARATOR PIPES (84)**

Furnish labor and material to receive three (3) fabricated pipe sections and preserve by hot dip galvanizing process.

One (1) 2" "S" shaped flanged section consisting of two (2) flanges, two (2) 90^0 elbows and approximately 10" of 2" pipe.

One (1) 2" "L" shaped section consisting of one (1) flange, one (1) coupling and one (1) 90^0 elbow.

One (1) 2" x 2'-3" section of pipe with one (1) flange.

Return to ship's engine room upon completion.

57. **WASH WATER PIPING (85)**

Furnish labor and material to receive two (2) fabricated sections of pipe and preserve by hot dip galvanizing process.

One (1) 2" "S" shaped section consisting of two (2) flanges, two (2) 90^0 elbows and approximately 12" long pipe.

One (1) 1-1/2" "L" shaped section consisting of two (2) flanges, one (1) 90^0 elbow, two (2) 1" coupling branches and approximately 9" of pipe.

Return to ship's engine room upon completion.

Item No.

58. **DISHWASHING MACHINE MOTOR (86)**

Furnish labor and material to receive one (1) Hobart dishwashing machine motor and deliver to the electric motor repair facility.

Disassemble, remove and renew stator windings, dip and bake. Clean all parts, furnish and install new bearings, balance and reassemble motor as original. Shop test.

Deliver to ship's engineers upon completion.

DATA:

Mfg.:	Hobart Corp.
Volts:	200/230
RPM:	3450
H.P.:	2
Amps:	5.5
Hz:	60
Model:	No. CS-120

59. **PORTABLE EXHAUST FAN MOTOR (87)**

Furnish labor and material to receive the portable exhaust fan assembly and transport to the electrical repair facility.

Disassemble fan assembly and remove the motor. Disassemble the motor, remove and renew the windings, balance rotor assembly, furnish new bearings, clean all parts and reassemble as original. Reinstall the motor on the fan assembly and deliver unit to the ship's engineers upon completion.

DATA:

Model:	No. AE VD 80 L2
H.P.:	5.5
KW:	8.5
RPM:	1100
Volts:	220

Item No.

60. **HEATING COIL STEAM LINES TO NO. 3 (1013) FUEL OIL TANK (75)**

Furnish labor and material to repair the tank top heating coil steam and condensate lines, two (2) each, 1" IPS penetrations to fuel oil tank No. 3 (1013).

Inert or clean and gas free the tank as directed and remove and replace or repair the four (4) 1" x approximately four (4) ft. long sections of pipe as they enter the tank top.

Remove and renew the pipe insulation. Test repair.

The tank access is in the forward auxiliary room (sewage space).

Item No.

44. PORT PROPELLER SHAFT BULKHEAD STUFFING BOX (ADD-2-52)

Remove the HOLD from this item and accomplish the work.

50. SHORE POWER

This item is canceled in its entirety.

61. LIFE RAFT FASTENERS (91)

Purchase forty (40) stainless steel hex head bolts with hex nuts and deliver to the ship's force (Chief Officer).

Size: 8mm diameter x 40mm long with 13mm hex head

62. STARBOARD MAIN ENGINE FUEL OIL RETURN LINE (92)

Furnish labor and material to remove a section of fuel oil return line for the starboard main engine in way of the port main engine exhaust gas receiver. Deliver the designated 1" x approximately 6 ft. long section of piping to the shop. Clean the section and fabricate a sleeve doubler from 2" diameter x 1" long nipple and weld around line in way of hangers.

Pickle the line to remove all impurities and reinstall as original.

Item No.

16-A. CABIN PORTHOLES

Cancel:
All work on the portholes and windows in the following listed cabins is canceled.

Boat Deck	147
Upper Promenade Deck	211, 214, 218, 222, 224, 228
Main Deck	320, 333, 337

Additional portholes:
Accomplish work to reseal the additional portholes in the following listed cabins.
Nos. 873, 639, 700, 877, 704, 881, 885, 897, 821 and 867

63. SHOP COMPUTER FOUNDATIONS

Furnish labor and material to fabricate and install stainless steel foundation platforms for four (4) computer terminals and four (4) keyboards in the counters of three (3) shops on the Promenade Deck. The foundations are approximately 19-1/2" long x 18" wide x 5" high in accordance with attached Sketch.

Remove front edge on recessed countertops and face with strip of formica as original.

The location and number of foundation arrangements are as follows.
One (1) in the Jewelry Shop
One (1) in the Boutique
Two (2) in the Gift Shop

64. FILTER ELEMENTS

Furnish labor and material to receive five (5) filter elements and clean by solvent soak method to remove all dirt and residue. Return to ship's engineers upon completion.

M/V NIEUW AMSTERDAM Job No. 4903

Item No. 63 - SHOP COMPUTER FOUNDATIONS

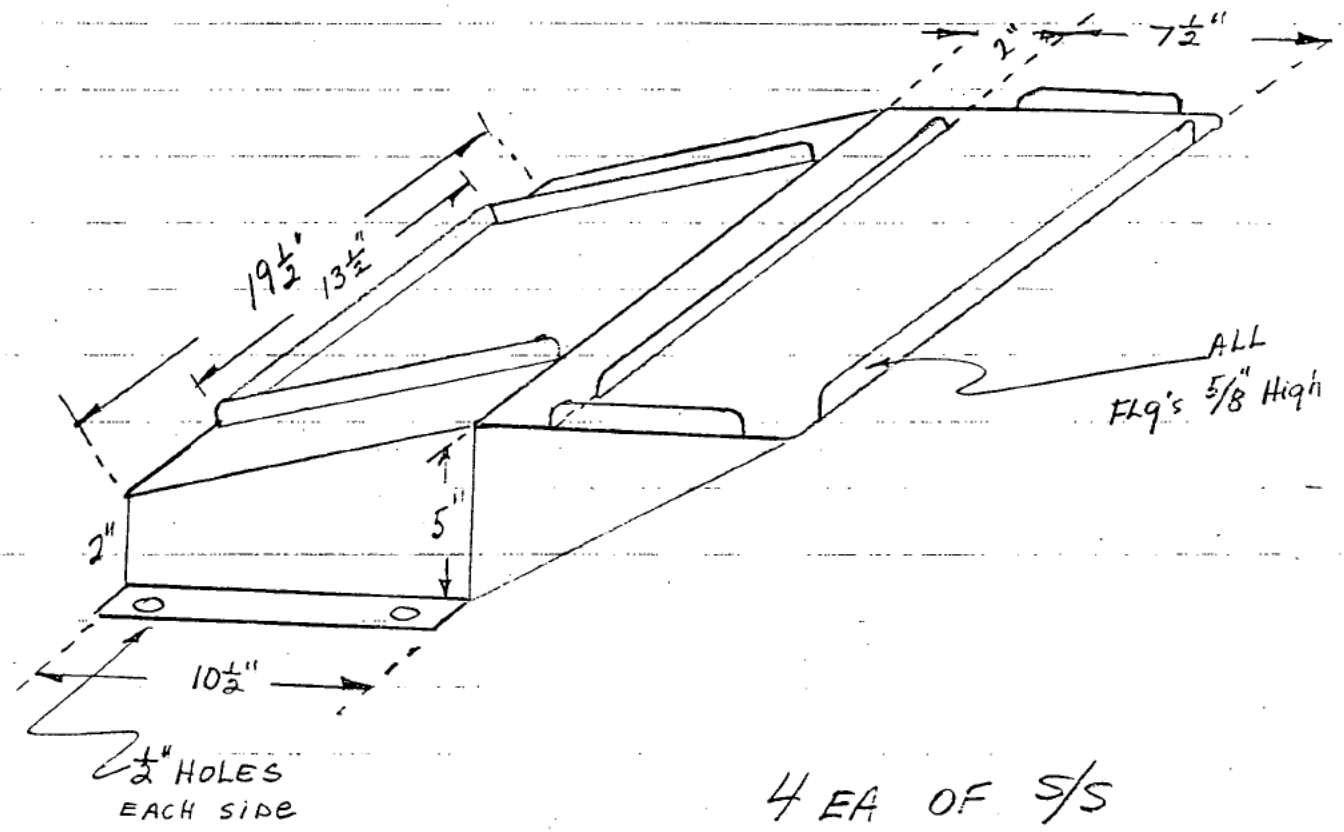

NORTHWEST MARINE IRON WORKS

MAILING ADDRESS: P.O. BOX 3109
PORTLAND, OR 97208

5555 N. CHANNEL AVE., BLDG. 2
PORTLAND, OREGON 97217

PHONE: (503) 285-7557

TWX: 910-464-6107 NORMARINE PTL

June 21, 1989

Holland America Line
300 Elliott Avenue West
Seattle, WA 98119

Attention: Mr. J. L. Adriaanse
Vice President - Technical Department

RE: M/V "NIEUW AMSTERDAM"
Pro Forma Invoices 4903-3 Thru 4903-8

Gentlemen:

Please find enclosed our Pro Forma Invoice Numbers 4903-3 thru 4903-8 submitted for your approval. Please let us know at your earliest convenience if there are any changes that need to be made.

We wish to thank you for your kind consideration.

Sincerely,

Nicholas G. Calley
Director of Sales

M/S NIEUW AMSTERDAM JOB NO. 4903

Item No.

1. BERTHAGE (1) CONTRACTOR'S REPAIR FACILITY 3168.00

Furnish the safe working berth at contractor's facility Berth 304, for the duration of repair availability, May 17 to 22, 1989.

PORT OF PORTLAND K 3168.00

M/S NIEUW AMSTERDAM JOB NO. 4903

Item No.

2. BERTHAGE SERVICES (1) 93,595.00

Provide labor, material and equipment to connect, maintain, and disconnect and remove upon completion, the following services.

A. Line handler upon arrival and departure

B. Gangways

C. Crane services

D. Crane rigging services

E. Condensate line

F. Fire protection - three (3) 2-1/2" hoses, one each connected fwd, midships, and one aft.

G. Potable water - two (2) 2-1/2" hoses

H. Telephones - one (1) unrestricted on bridge with two (2) keys, two (2) restricted phones, one at gangway, and one at control room.

I. Pay telephones - two (2) located at "B" deck break.

J. Steam supply - one (1) 2-1/2 connection with filter

K. Gas free certificate for all areas requiring hot work.

L. Fire watch

M. Compressed air

N. Sewage disposal

O. Garbage disposal

LABOR:	1694 S.T.	50,520.00
	462 P.T.	8316.00
MATERIAL:		5008.00
SUB CONTRACTOR		7731.00
PORT OF PORTLAND		17,940.00
		93,595.00

Item No.

3. COLD FRESH WATER PIPING (6) ~~377,445.00~~ SEPARATE INVOICE

Furnish labor and material to receive Owner-furnished pre-fabricated, pre-insulated 1-1/2" copper nickel piping assemblies ready for installation.

Remove and reinstall all interferences including paneling, lighting fixtures and insulation.

Remove all 1-1/2" galvanized cold water piping from the stabilizer room and the coolers up through the upper forward loop and back to source and replace with approximately one ~~thousand five hundred (1500)~~ ONE THOUSAND SEVEN HUNDRED SEVENTY (1770) FT ft. of the above Owner-furnished piping. All new piping will follow original runs and existing hangers will be reused. All watertight and fireproof barrier penetrations to be sleeved and welded.

Remove the existing galvanized piping from the service room to the stabilizer room and furnish and install approximately ~~eighty (80)~~ ONE HUNDRED TWENTY (120) ft. of 4" and ~~sixty-eight (68)~~ EIGHTY 80 ft. of 2" copper nickel replacement piping for the forward upper loop supply. AND FORTY (40) FEET OF 2 1/2"

Furnish and install supplementary pipe insulation

Flush and pressure test piping upon completion.

LABOR:	~~8543 S.T.~~	~~256,290.00~~
	~~4486 P.T.~~	80,748.00
MATERIAL:		20,053.00
		377,445.00

SEPARATE INVOICE

Item No.

4. COMPUTER CABLE (30) ~~$15,466.00~~

Furnish labor and material to remove necessary overhead and wall panels to install approximately nine thousand seven hundred sixty-three (9,763) feet of 8-conductor cable. Provide and install a total of approximately nine hundred fifty-two (952) feet of 110 volt electrical cable and necessary receptacles.

New computer cable is to be connected to new computer by Owner-furnished Representative. Provide and install all necessary MCTs for penetrations through water tight bulkheads and decks.

Route the cables to the following locations.

CABLE ROUTING

Shore Excursion Office

Terminals located under counter and on desk. Thirty (30) feet of cable estimated inside office to storage locker in office at frame 165. Cables to run down through MCT in locker to beauty parlor on main deck and into computer room approximately forty (40) feet. Inside computer room would take twenty (20 ft.) to reach all areas. This is ninety (90) feet total for each run and four (4) each cables are requested, a total three hundred sixty (360) feet.

Henry's Bar

Terminal location, aft end of back bar frame 139. Cable runs under counter fwd to frame 147 Linde, 115 volt outlet, and into pantry under sink. This is approximately twenty (20) feet, run cable up to overhead under stainless conduit. Inside overhead run fwd to piping change about frame 155 and fwd to shore excursion office locker and down to MCT, into the beauty parlor. This is one hundred ten (110) feet plus twenty (20) feet inside computer room. A total of one hundred fifty (150) feet for each run and two (2) each cables requested, total three hundred (300) feet.

Photo Lab

Terminal location not known. Estimate twenty (20) feet of cable in lab area. Cable runs out to passage way at frame 53 on boat deck and fun fwd to pipe locker at frame 113 (Stateroom 134), then down to upper Prom Deck passage and forward to elevator at frame 171. Enter shaft through MCT or pipe and down shaft to main deck. Exit shaft through MCT to barber shop, run aft through beauty parlor to frame 163 and into computer room. Total cable length is four hundred and fifty (450) feet.

Deck Department

Terminal location aft bulkhead requires eighteen (18) feet of cable in space. Cable run through overhead at frame 184 of Nav Deck into passage way. Run aft in overhead through MCT at frame 176 and aft to frame 173. Enter elevator shaft through MCT and down to main deck. Run out through MCT into barber shop, aft through beauty shop and into computer room. Total cable length is two hundred (200) feet.

(continued)

Item No.

4. COMPUTER CABLE (30) (CONTINUED)

Beverage Manager

Terminal location not known. Estimate sixteen (16) feet cable in office. Cable run in overhead fwd through entrance, over gents head, over hotel manager's office, over entrance at frame 147 and into store room M-7. Run to port and frame 151 into locker to stbd passage. Run fwd down passage through MCT at fire boundary frame 152 up to frame 163 and into computer room. Total cable one hundred forty-five (145) feet.

Hotel Manager

Terminal location not known. Estimate twenty-four (24) feet cable in office. Run cable in overhead and use same route as beverage manager. Total cable is one hundred fifteen (115) feet.

Dining Room

Terminal location on fwd counter stbd side estimate eight (8) feet cable in dining room. Run cable through pipe in fire boundary frame 127 into service stairwell then down to "A" deck. Continue through pipe at fire boundary to stbd passage. Run fwd in overhead to frame 151 then up through pipe into locker on main deck to overhead. Run to stbd passage through MCT at frame 152 then fwd to frame 163 and into computer room. Total cable one hundred forty-five (145) feet.

Crew Bar

Terminal location not known. Estimate twenty (20) feet inside bar area. Run cable fwd to frame 14 and follow same route as P. O. Bar. Total cable five hundred twenty (520) feet.

Provision Office

Terminal location not known, estimate sixteen (16) feet inside office. Run cable aft through fire boundary in pipe at frame 23 then to MCT as same frame to center passage way. Follow same route fwd as P. O. Bar. Total cable five hundred (500) feet.

Engine Room Office

Terminal location not known. Estimate eight (8) feet inside office. Run cable down through pipe into engine room "B" deck level. Follow cableway on aft bulkhead to port side. Run same route fwd as P. O. Bar. Total cable four hundred eighty (480) feet.

Wine Room

Terminal location not known. Estimate twenty (20) feet inside room. Run cable down through pipe into engine room and to cable run centerline of engine room. Run aft and down bulkhead to "B" deck level. Follow same route as P. O. Bar. Total cable four hundred ninety (490) feet.

Executive Chef

Terminal location inboard bulkhead. Estimate eight (8) feet inside office. Run cable down to engine room through pipe and follow same route for wine room and P. O. Bar. Total cable four hundred ninety (490) feet.

(continued)

Item No.

4. COMPUTER CABLE (30) (CONTINUED)

Captain Cabin

Terminal location not known. Estimate twenty (20) feet of cable in cabin. Run from overhead at frame 190 and into passage way. Cable route same as deck office. Total cable length two hundred twenty (220) feet.

Chief Engineer

Exact terminal location not known. Estimate twenty (20 ft.) of cable in office. Run from overhead at frame 181 and into passage way. Cable route same as deck office. Total cable length one hundred ninety-five (195) feet.

Cruise Director

Estimate sixteen (16) feet cable inside office. Run out to stbd passageway at frame 177 main deck and aft through fire barrier frame one hundred seventy-six (176) through pipe, continue aft to frame 163 and into computer room. Total cable length eighty (80) feet.

Maitre d'

Estimate sixteen (16) feet cable in office. Run out to passage at frame 165, down passage to frame 163 and into computer room; total cable length fifty (50) feet.

Purser

Estimate sixteen (16) feet cable in office. Run fwd to computer room in overhead to frame 163; total cable length thirty-five (35) feet.

Front Office

Terminals located under counter, one (1) port and one (1) stbd. Run cable under counter to port bulkhead and up to overhead of housekeeper office. Run fwd through food and beverage office into beauty parlor to frame 163 then into computer room. Cable length for stbd terminals is one hundred fifteen (115) feet and port terminals is one hundred five (105) feet. Total cables two hundred twenty (220) feet.

Food and Beverage Office

Terminal location not known. Estimate sixteen (16) feet cable in office, run in overhead fwd to beauty parlor frame to 163 and into computer room. Total cable seventy-five (75) feet.

Housekeeper

Terminal location not known. Estimate sixteen (16) feet cable in office, run in overhead fwd through food and beverage office and beauty parlor to frame 163 then into computer room. Total cable ninety (90) feet.

(continued)

Item No.

4. COMPUTER CABLE (30) (CONTINUED)

Controller

As this is located in the computer room, estimate twenty (20) feet per run. There are two (2) runs required for a total of forty (40) feet.

Total of cable lengths quoted in each section are approximately and do not reflect unforeseen obstacles to go around.

OVERHEAD REMOVALS

The following overhead does not include overhead removed for piping.

Navigation Deck

Passage from frame 171 to frame 195. Some overhead in deck office, hotel manager, captain, chief officer, chief engineer and radio office to terminal locations.

Boat Deck

Removals in photo lab and print shop to terminals.

Promenade Deck

Approximately from frame 155 in Henry's Bar to pantry and inside pantry. Also in excursion office.

Main Deck

Stbd passage frame 180 to frame 150. Some overhead in cruise director, Maitre d', purser, barber shop, beauty parlor, food and beverage office, housekeeper and computer room. Also overhead in locker frame 150 stbd, M-7 storeroom, stbd entrance fwd, gents room, hotel manager, stbd entrance aft and beverage manager office.

Frame 15 overhead in P. O. Bar to stbd bulkhead and crew bar fwd to terminal.

"A" Deck

Stbd passage frame 174 to frame 162 inside stateroom No. 457. This is for 125 amp cable to computer room. Stbd passage frame 152 aft to frame 127.

"B" Deck

Port passage frame 116 aft to frame 58 center passage frame 47 aft to frame 23 sally port from provision office to carpenter shop port passage frame 172 aft to frame 169.

Joiner Work

Some joiner work in each room may be required for cable runs down to terminals.

(continued)

Item No.

4. **COMPUTER CABLE (30) (CONTINUED)**

115 VOLT POWER (TSGU-4)

Dining Room	250 feet
BSM	85 feet
Hotel Manager	125 feet
PSM	92 feet
Cruise Director	70 feet
Storekeeper	100 feet
Maitre d'	30 feet
Extensions for Rooms/110 V Avail	200 feet
Total	952 feet

115 volt power from sub-station 4 to computer room 125 amp (TSGU-25) 85 feet

Power panel with two (2) each 50 amp breakers and TSGU-23 to each main frame.

MCT FRAMES

Navigation Frames	Two (2) each	7 Cables	8 Cond	RGS-2
4 Promenade	Two (2) each	8 Cables	8 Cond	RGS-2
Main Deck	One (1) each	21 Cables	8 Cond	RGS-2
"B" Deck	Two (2) each	7 Cables	8 Cond	RGS-2
	Three (3) each	6 Cables	8 Cond	RGS-2
	Two (2) each	3 Cables	8 Cond	RGS-2
	Twelve (12) each	(11 each RGS-2/1 each RGS-4)		

When complete reinstall all removed overhead and wall panels.

LABOR: 3443 S.T. 103,290.00
1733 P.T. 31,194.00

MATERIAL: 9414.00

151,466.00

M/S NIEUW AMSTERDAM JOB NO. 4903

Item No.

5. POTABLE WATER MANIFOLDS (14) 65,781.00

Furnish labor and material to renew the potable water manifolds as directed by Owner's Representative. USING O.F. MATERIAL.

LABOR: 1500 S.T.
928. P.T.

MATERIAL: 530.00

65,781.00

Item No.

6. TRANSFERABLE BEDS (31)

This item is canceled in its entirety.

M/S NIEUW AMSTERDAM JOB NO. 4903

Item No.

7. PASSENGER CABIN BATHROOM WALL GROUTING (27) K 6,397.00

Furnish labor and material to repair the grouting in the following passenger cabin bathroom/shower walls:

014, 123, 131, 302, 308, 316, 320, 322, 328, 332, 336, 338, 345, 348, 350, 352, 354, 358, 366, 367, 369, 424, 428, 429, 433, 440, 448, 449, 451, 460, 463, 471, 477, 480, 484, 494, 497, 513, 515, 533, 554, 558, 561, 601, 608, 634, 638, 656, 667, 675, 678, 679, 680, 688, 689, 690, 693, 710, 712, 802, 827, 864, 871, 892, 893, 895, 896, 898, 903.

SUB-CONTRACTOR: K 6,397.00

M/S NIEUW AMSTERDAM JOB NO. 4903

Item No.

8. CO_2 SYSTEM (18) (A) $432.00

Furnish labor and material to inspect CO_2 system for re-certification.

A.
Furnish labor and material to furnish and install four hundred (400) inspection tags.

SUB-CONTRACTOR: $432.00

Item No.

9. HALON SYSTEM (19) 359.00

Furnish labor and material to inspect and recertify the Halon system for the following.

1. Separator Room
2. Incinerator Room
3. Paint Storage
4. Vent Duct "B" Deck Pantry
5. Vent Duct Main Deck Galley
6. Vent Hood Lido Pantry

SUB-CONTRACTOR: 359.00

Item No.

10. FIRE EXTINGUISHERS (20) (A) $42.00

Furnish labor and material to inspect and recertify the following fire extinguishers:

One (1) pc.	136 liter	wheeled foam unit
Twenty-eight (28)pcs.	6kg	CO_2 fire extinguishers
Six (6)pcs.	2kg	CO_2 fire extinguishers
Eight (8) pcs.	2kg	powder fire extinguishers
Sixteen (16) pcs.	5 lbs.	powder fire extinguishers
Four (4) pcs.	3 lbs.	Halon fire extinguishers
Two (2) pcs.	2 lbs.	Halon fire extinguishers

A.
Furnish labor and material to accomplish the additional work in conjunction with portable fire extinguisher inspection.

Purchase:	Five (5)	5# ABC extinguishers
	Seventeen (17)	5# Universal brackets
	Two (2)	2-1/2# Halon extinguishers
Recharge:	One (1)	15# CO_2 extinguisher
	One (1)	2-1/2# Halon extinguisher

SUB-CONTRACTOR: $42.00

Item No.

11. FLOOR DECK REPAIRS (29) 10,607.00

Furnish labor and material to repair the damaged floor and retile when complete. Chip away all tile and underlayment as necessary to repair deck. Repair underlayments and retile using contractor furnished material.

The following locations are effected:

a. Men's toilet outside upper Prom aft

b. Men's sauna dressing room – Navigation deck

c. Pantry Explorer's lounge

NOTE: Water under tiles in b. and c.

LABOR:	101 ST.	3030.00
	20 P.T	360
MATERIAL:		223.00
SUB-CONTRACTOR		6422.00
		10,607.00

Item No.

12. COLD SURGE WATER LINE-CO_2 ROOM (8)

This item is canceled in its entirety.

M/S NIEUW AMSTERDAM JOB NO. 4903

Item No.

13. LIFEBOAT INSPECTIONS (21) ~~3722.00~~ 7,722.00

Furnish labor, material and equipment to inspect Nos. 1, 2, 3, and 4 lifeboats. Rig boats from ship to shore, and support boats with appropriate cribbing. Remove interior panels to expose suspension plates. Upon completion of inspection by Owner's Representative and regulatory bodies, reinstall all removed interferences and restow boats onboard.

LABOR:	232 ~~106~~ S.T.	6960.00 ~~3180.00~~
	16 P.T.	288.00
MATERIAL		58.00 ~~56.00~~
		~~3722.00~~
		7822.00

M/S NIEUW AMSTERDAM JOB NO. 4903

Item No.

14. LIFEBOAT DAVITS (22) $22,356.00

Furnish labor, material and equipment including staging to inspect the davits for Nos. 1, 2, 3, and 4 lifeboats. Remove falls and roller pins and rig skates from ship to shop. Open out, clean, measure, and inspect all sheaves and rollers. Submit a report to Owner's Representative of existing clearances and conditions found. When directed by Owner's Representative reassemble sheaves and rollers and reinstall skates as original. Reinstall falls and clean up working area upon completion.

LABOR:	618 S.T.	18540.00
	110 P.T.	1980.00
MATERIAL:		630.00
		$22,356.00

Item No.

15. HANDICAPPED CABINS (23) (A) ~~114,882.00~~ SEPARATE INVOICE

Furnish labor and material to install handicapped bathrooms in passenger cabin Nos. 100, 101, 102 and 103 in accordance with drawing No. 0-10-208 and Owner-furnished drawings – location (9/13/88 – (9/14/88).

Furnish and install protection for deck covering and walls in the four (4) cabins and adjacent passageways.

Remove the tubs, W.Cs., lavatory and counter, showers, fixtures and fittings.
NOTE: All new panels, fittings, tile and carpet pieces are Owner-furnished.

Remove, modify and install wall panels in cabins and relocate the entrance doors to cabins Nos. 102 and 103. Remove, modify and install wall panels as necessary in cabin Nos. 101 and 100. Remove and modify ceiling panels in cabins as indicated.

Remove the wardrobe closets in cabin Nos. 102 and 103 and relocate as indicated in drawing but interchange cabins to allow use of existing panels.

Remove all existing bathroom wall panels and ceiling panels.
NOTE: Remove and reinstall ceiling panels in cabins below boat deck in way of work for access to deck as necessary.

Receive all Owner-furnished material and install bathroom wall panels, ceiling panels, deck panels and all W.Cs., lavatory units, shower units, bars and shower curtains.

Furnish material as required and connect drains, sewage, flush lines, hot and cold water lines and insulate as original. Connect all electrical fixtures and devices from existing sources and reuse ceiling fixtures.

A.

Remove existing cabin carpets and remove and relocate the beds. Remove, modify and install the bed headboards and remove and relocate the night tables; two (2) each cabin.

Repair the deck underlayment and form wheelchair ramps from cabin deck level to bathroom deck level in way of the doors, approximately 6-1/2 ft. wide tapered down to deck on all three (3) sides away from walls.

Install new Owner-furnished carpets in all cabins and leave working area clean upon completion.

FURNISH LABOR, MATERIAL & EQUIPMENT TO REMOVE EXISTING BLACK WATER LINES AND RELOCATE TO SUIT FINAL LOCATION OF BATHROOMS.

LABOR:	2483	S.T.	74,490.00
	140		4,200.00
	1636	P.T.	29,448.00
MATERIAL:			1992.00
			196.00
SUB-CONTRACTOR:			2757.00
			~~114,882.00~~
			119,278.00

Item No.

16. CABIN PORTHOLES (24) (A) $32,978.00

Furnish labor, material and equipment to remove designated cabin porthole, frames, seals and porthole glasses. Clean out frame sealing areas and install new Owner–furnished sealing material and install the porthole glass as original. Dress the sealing material neatly around the internal and external edges of the glass frame. Replace any damaged studs or screws. Protect adjacent areas from being soiled or damaged.

When complete, hose test the repaired portholes for Owner's Representative and regulatory bodies.

The designated cabins are:

Main Deck	344
"A" Deck	460, 480, 482, 484, 486, 496, 520, 548, 558
"B" Deck	628, 629, 636, 640, 652, 654, 656, 660, 664, 668, 675, 680, 687, 688 692, 706, 714
"C "Deck	814, 844, 870, 878, 882, 886, 890 898, 902, 857, 861, 901

NOTE: Cabin No. 344 is a 21" x 30" window.
Cabin Nos. 460 through 901 are 15" portholes at one (1) per cabin.

A.
Furnish labor and material to accomplish work as described in Item No. 16 to reseal the additional portholes in the following listed cabins.

Nos. 873, 639, 700, 877, 704, 881, 885, 897, 821 and 867.

LABOR:	760 S.T.	22,800.00
	345 P.T.	6210.00
MATERIAL		407.00
SUB-CONTRACTOR		1783.00
		$32,978.00

M/S NIEUW AMSTERDAM JOB NO. 4903

Item No.

17. CABIN BATHROOM STEEL FLOORS (25) $ 5016.00

Furnish labor and material to ~~install a new~~ REPAIR THE metal floor in the bathroom/shower and retile afterwards in the following passenger cabins.

a)	Cabin No. 127	Shower floor (Boat)
b)	Cabin No. 129	Shower floor (Boat)
c)	Cabin No. 147	Bathroom floor (Boat)
c)	Cabin No. 225	Bathroom floor (UP)

LABOR: 78 S.T.	2340.00
MATERIAL:	335.00
SUB-CONTRACTOR	2070.00
	$5016.00

M/S NIEUW AMSTERDAM JOB NO. 4903

Item No.

18. HOT WATER PIPE - CASINO (7) 1957.00

Furnish labor and material to renew a section of hot water pipe located above overhead panels in Casino. Remove overhead panels as necessary to gain access. Remove and renew the 12mm x 2 feet of copper pipe.

Test pipe to prove tight and reinstall overhead panels.

LABOR:	56 S.T.	1680.00
	5 P.T	90.00
MATERIAL		81.00
		1957.00

Item No.

19. DANCE FLOORS (17) 17,451.00

a) Furnish labor and material to remove the top layer of wood flooring including border (Pear Tree Lounge) on the dance floors in the Pear Tree Lounge and the Henry Hudson Lounge, being careful **not** to damage plywood sub floor. Clean sub floor and furnish and install white oak flooring on the Pear Tree Lounge dance floor and teak wood flooring on the Henry Hudson dance floor. Sand and varnish floors using three (3) coats of moisture curing Urethane varnish.

b) Furnish labor and material to sand and varnish the dance and stage floors in the Stuyvesant lounge using three (3) coats of moisture curing Urethane varnish.

Furnish protection for adjacent carpeting and remove upon completion.

LABOR: 79 S.T.	2370.00
33 P.T.	594.00
MATERIALS	176.00
SUB-CONTRACTOR:	13,370.00
	17,451.00

Item No.

20. **IDENTIFICATION SIGNS (28)** 2338.00

Furnish labor and material to renew or repair the blue/gold lettering in the following areas.

a) Front and back doors of Pear Tree Club and Partridge Bar (UP)

b) Entrance door to Hudson Lounge (Promenade) forward port side

c) One (1) back entrance door to (Promenade) Stuyvesant Lounge

d) Lido sign on four (4) glass (Promenade) windows of Lido Restaurant.

SUB-CONTRACTOR: 2338.00

Item No.

21. CONVECTION OVENS – MAIN KITCHEN (11) $10,820.00

Furnish labor and material to renew the three (3) convection ovens AND HOT PLATES located in main kitchen. Disconnect electrically, unbolt from foundations and dispose of the three (3) existing convection ovens.

Rig in and set in place three (3) new Owner–furnished convection ovens AND HOT PLATES. Bolt down and reconnect electrically and prove operational.

Install flashing in way of bulkheads all around and seal as required by USPH.

LABOR:	213 S.T	6390.00
	192 P.T.	3456.00
MATERIAL:		390.00
		10,820.00

Item No.

22. HOT PLATES - MAIN KITCHEN (12)(A) 21,029.00

Furnish labor and material to remove one (1) oven/hot plate unit and two (2) tilt fryer units now existing in a line from forward to aft (hot plate, tilt fryer and tilt fryer) to scrap.

Take delivery and install one (1) new hot plate unit and two (2) new tilt fryer units furnished by Owner's in a line forward to aft (tilt fryer, tilt fryer and hot plate unit).

Modify all connections as to new positions.

Remove the deck tile and underlayment in way of the tilt fryer bases and furnish and install inverted "U" shaped stainless steel foundations approximately 6" wide x 6" high x 3' long in way of each end of the bases; total of four (4). Reinstall underlayment and deck tile removed when completed.

A.
Furnish labor and material to convert the two (2) tilt fryers from 440 volt wiring and circuits to 220 volt wiring and circuits.

a. Re-strap the element hook-up.
b. Furnish approximately thirty (30) ft. of No. 6/3 wire and rewire the internal power circuits.
c. Exchange the contacts with Owner-furnished 220 volt contacts.
d. Modify the control circuits to 220 volts.
e. Furnish and install stainless steel junction boxes and sheet metal cable covers to extend the power cables to the two (2) units.

LABOR:	460 S.T.	13,800.00
	222 P.T.	3996.00
MATERIAL:		291.00
SUB-CONTRACTOR:		1808.00
		21,029.00

M/S NIEUW AMSTERDAM JOB NO. 4903

Item No.

23. MOORING/WINDLASS BRAKE BANDS (15) $2,765.00

Furnish labor and material to remove and inspect brake bands on the port and stbd mooring windlasses. Disconnect linkages, clean and examine the brake band linings. Needle gun scale the brake drums to a smooth surface.

When directed by Owner's Representative, assemble and reinstall both brake bands, connect linkages and adjust the assemblies.

LABOR: 96 S.T. 2500.00

MATERIAL 36.00

2765.00

Item No.

24. **PASSENGER CABIN BATHROOM FLOOR GROUTING (26)** 3,507.00

Furnish labor and material to repair grouting in the following passenger cabin bathroom/ shower floors:

300, 314, 316, 320, 321, 322, 324, 326, 328, 332, 334, 336, 338, 345, 348, 350, 351, 352, 357, 401, 403, 411, 415, 417, 419, 441, 445, 448, 463, 486, 489, 492, 493, 494, 496, 497, 499, 501, 505, 506, 509, 510, 511, 512, 513, 515, 516, 517, 518, 521, 522, 525, 531, 534, 536, 537, 538, 539, 540, 542, 543, 546, 548, 550, 552, 555, 558, 560, 561, 603, 608, 609, 632, 634, 640, 649, 651, 653, 656, 662, 664, 666, 667, 668, 669, 670, 672, 676, 679, 682, 683, 684, 685, 693, 702, 705, 710, 711, 712, 807, 819, 827, 828, 839, 840, 841, 849, 855, 864, 865, 868, 872, 873, 882, 889, 892, 898, 899, 900, 902.

SUB-CONTRACTOR: 3507.00

M/S NIEUW AMSTERDAM JOB NO. 4903

Item No.

25. FAN DUCTING (3) 3,404.00

Furnish labor, material and equipment to renew a section of eroded vent ducting in fan room A–2. Ducting for renewal is eight (8) ft. long, 15" x 25" rectangular duct with a 45° elbow at one end. Renew ducting from transition elbow to first rivet band. Prime and coat as original.

LABOR: 77 S.T.	2310.00
42 P.T.	756.00
MATERIAL	154.00
	3404.00

M/S NIEUW AMSTERDAM JOB NO. 4903

Item No.

26. AIR VENT (16) 4490.00

Furnish labor and equipment to open out for Lloyd's inspector fifteen (15) ballast tank (ball type) air vent valves. Remove retaining plates and ball. Clean balls and seats for Owner's Representative and Lloyd's Surveyor inspection. Upon completion of inspection close valves as original.

The locations will be determined before arrival of the vessel.

LABOR: 135 S.T 4050.00

MATERIAL: 190.00

4,490.00

Item No.

27. STARBOARD MAIN ENGINE STEP GEAR ALIGNMENT CHECK (13) 498.00

Furnish labor and equipment to check the alignment between the starboard main engine step up gear, output shaft, and starboard main generator. Remove required guards and set up dial indicators to read face and rim run outs of Spiro-Flex coupling. Indicator will bridge rubber elements. Submit alignment reading to Owner's Representative and upon approval, reinstall removed interferences.

LABOR: 15 S.T 450.00

MATERIAL: 21.00

498.00

Item No.

28. TANK TOP PENETRATIONS DOUBLE BOTTOM FUEL OIL TANK 1016 (10) $7031.00

Furnish labor, material and equipment to renew four (4) leaking tank top penetrations in fuel oil tank 1016. Crop out four (4) 1" steam pipes, two (2) supply and two (2) exhaust for heating coils from manifold valve flanges down to the tank top penetration coupling with power saw. Using existing piping for template, fabricate replacement sections and bolt to manifold valves and furnish and install a coupling in way of tank top stub end and end of new pipes.

Inert tank with CO_2 and monitor tank gas condition. Weld couplings to tank top and new pipes to seal penetration and piping.

Conduct air test of penetration to prove tight.

Furnish and install new flange lagging pads and insulate and lag the new piping.

LABOR:	126 S.T.	3780.00
	92 P.T.	1656.00
MATERIAL:		466.00
SUB-CONTRACTOR		750.00
		$7031.00

Item No.

29. TANK TOP PENETRATIONS DOUBLE BOTTOM FUEL OIL TANK 1015 (9) 5625.00

Furnish labor, material and equipment to renew four (4) leaking tank top penetrations in fuel oil tank 1015. Crop out two (2) 1" steam supply pipes for heating coils, from manifold valves and crop out two (2) 3/4" steam return pipes from manifold valves to the tank top penetrations with a power saw. Using existing piping for templates, fabricate replacement sections and bolt to manifold valves and furnish and install a coupling in way of tank top stub end and end of new pipes.

Inert the tank with CO_2 and monitor tank gas condition. Weld couplings to tank top and new pipes to seal penetration and piping.

Conduct air test of penetration to prove tight.

Furnish and install new flange lagging pads and insulate and lag the new piping.

LABOR:	112 S.T.	3360.00
	49 P.T.	882.00
MATERIAL		330.00
SUB-CONTRACTOR		750.00
		5625.00

Item No.

30. PORT AND STBD OIL FIRED BOILER BLOWDOWN VALVES (5)

This item is canceled in its entirety.

Item No.

31. BALLAST TANK NO. 5 (4)

This item is canceled in its entirety.

Item No.

32. CROSSOVERS (2)

This item is canceled in its entirety.

M/S NIEUW AMSTERDAM JOB NO. 4903

Item No.

33. SHIP'S STORE X 3,101.00

Furnish services of riggers and crane service to assist in loading and stowage of vessel's stores and provisions.

LABOR: 72 S.T. 2160.00
43 P.T. 774.00

3101.00

Item No.

34. OWNER-FURNISHED MATERIAL K 3197.00

Furnish labor, material and equipment to receive and store Owner-furnished material and equipment to be used during the vessel's availability period in shipyard. Clear all material/equipment through U.S. Customs.

Deliver material/equipment to vessel when directed. Furnish all fees, freight and transportation charges.

LABOR:	44 S.T.	1320.00
	16 P.T.	288.00
MATERIAL:		439.00
FREIGHT		978.00
		3197.00

M/S NIEUW AMSTERDAM JOB NO. 4903

Item No.

35. SUPPORT LABOR $18,877.00

Furnish support labor as required during vessel's availability period.

LABOR:	381 S.T.	11,430.00
	345 P.T.	6,210.00
MATERIAL:		219.00
		$18,877.00

Item No.

36. WALK-IN REFRIGERATOR DOORS MAIN KITCHEN 10,274.00

Furnish labor and material to receive two (2) Owner-furnished walk-in refrigerator doors with frames and install in the salad kitchen and vegetable kitchen walk-in refrigerator entrances.

Remove the existing doors with frames including thresholds and prepare entrance openings for new installation including chipping out the tile and underlayment in way of the entrance sills. Transport the two (2) new doors to the main kitchen. Fit in the openings and install with sealing compound in way of frames and bulkhead. Secure by bolting. Install filler insulation and furnish and install 2" wide flashing around frames and seal all joints as required by USPH.

Remove and reinstall approximately fifty (50) ft. of ceiling panels and furnish and install approximately fifty (50) ft. of power cable and hardware to the new door assembly heaters.

Furnish and install underlayment and tile where removed in way of door sills and install Owner-furnished door sills.

Clean up all debris and leave working space clean upon completion.

LABOR:	251	S.T.	7530.00
	80	P.T.	1440.00
MATERIAL:			503.00
SUB-CONTRACTOR			247.00
			10,274.00

Item No.

37. DECK TILE IN WALK-IN REFRIGERATORS IN MAIN KITCHEN

This item is canceled in its entirety.

Item No.

38. DISHWASHER TABLE - LIDO DISHWASHING ROOM (Add-2-48)

This item is canceled in its entirety.

Item No.

39. PLEXUS COMPUTER SYSTEM (ADD-2-54)

This item is canceled in its entirety.

Item No.

40. CREDIT CARD TELEPHONE CABLE (ADD-2-54) SEPARATE INVOICE.

Furnish labor and material to install Owner-furnished cable from the radio room to the booth in way of the safe deposit box room at the stbd side of the front desk on Main Deck for the credit card telephone.

The cable run to follow the route of computer cables being installed from the Navigation Deck to the computer room area and connect to the credit card telephone. Remove and reinstall panels in the telephone booth for this installation. This will require approximately three hundred eighty (380) ft. total cable length for two (2) runs.

Furnish and install approximately fifty (50) ft. of T-4 cable and a receptacle for 110 volt power to the above installation.

Item No.

41. CARPET REPLACEMENT 74,566.00

Furnish labor and material to remove and dispose of the existing carpet. Clean the surface of the underlayment and install new Owner-furnished carpet with necessary adhesive.

NOTE: Repairs to the underlayment will be covered under an additional item

The designated areas are listed herein.

PASSENGER CABINS - TOTAL QUANTITY - FORTY (40) CABINS

Green Carpet Stock = Five (5) rolls

Approximately five hundred (500) yds @ NMIW
Approximately twenty (20) cabins
Five hundred (500) yards ordered 1989
Approximately twenty (20) cabins

Sun Deck

004 (BL)	012 (BL)
005 (B*)	015 (BL)
006 (BR)	018 (BL)
009 (BL)	020 (BR)
011 (BR)	

Navigation Deck

062(B*)	075(B*)
078(BL)	086(BL)

Boat Deck

102(B*)
125(A1)
143(BR)

Upper Promenade Deck

200(B*)	206(BR*)
211(BL)	212(BL)
218(B1)	225(BR)

Main Deck

369(EL)

"A" Deck PS	"A" Deck SB
460(EL)	413 (E*)
508(CR)	419(E*)
512(CL)	499(CL)
520(CL)	511(CR)
524(CR)	

*-Indicates "non-standard"

(continued)

Item No.

41. CARPET REPLACEMENT (CONTINUED)

"B" Deck PS
600(EL)

"C"Deck PS
844 (EL)
860(CL)
874(CL)

Blue Carpet — Stock onboard M/S NIEUW AMSTERDAM

Boat Deck
055 (A2)
120(A2)

"A" Deck SB
537(DR)

"C" Deck PS
818(DR)

STAIRCASE STEPS

Solid Blue Carpet	Stock	- 9'-2" wide	1-1/2 rolls @ NMIW
		9'-2" wide	1 roll @ N.A.
		12'-0" wide	1/2 roll @ NMIW

Main Staircase	**Carpet Cuts**
Navigation to Sun Deck (SB)	
Upper and lower stair split	9 ft. W. x 8.5 ft. L.
Upper Promenade to Boat Deck (PS)	
Upper and lower stair split	9 ft. W. x 8.5 ft. L.
"C" Deck to "B" Deck	
Upper and lower stair split	9 ft. W. x 8.5 ft. L
Aft Staircase	**Carpet Cuts**
Navigation to Sun Deck (SB)	
Upper and lower stair split	9 ft. W. x 8.5 ft. L.
"C" Deck to "B" Deck	
Upper and lower stair split	9 ft. W. x 8.5 ft. L
Total Blue Solid Carpet Required	9 ft. W. x 43 ft. L

(continued)

Item No.

41. CARPET REPLACEMENT (CONTINUED)

STAIRCASE LANDINGS

Blue 4-Square Carpet Stock - 500 sq. yds. ordered (Note: Half for NO)

Main Staircase	Carpet Cuts
Navigation to Sun Deck Size: 10'-1" W x 6'-2" L	12 ft. W x 6.5 ft. L
Navigation to Boat Deck Size: 10'-1" W x 6'-0" L	12 ft. W x 6.0 ft. L
Upper Promenade to Boat Deck(SB) Size: 13'-4" W x 6'-1" L	12 ft. W x 6.0 ft. L (plus fill)
"A" Deck to Main Deck Size: 37'-9" W x 11'-0" L	12 ft. W x 11.0 ft. L 12 ft. W x 11.0 ft. L 12 ft. W x 11.0 ft. L (plus fill)

Forward Staircase	Carpet Cuts
Boat to Upper Promenade Deck Size: 11'-1" W x 6'-9" L	12 ft. W x 7.0 ft. L
Promenade to Main Deck Size: 16'-7" W x 9'-4" L	12 ft. W x 9.5 ft. L 12 ft. W x 9.5 ft. L
Main to "A" Deck Size: 16'-7" W x 8'-2" L	12 ft. W x 8.5 ft. L (plus fill)
"A" Deck to "B" Deck Size: 11'-8" W x 7'-0" L	12 ft. W x 9.5 ft. L

Aft Staircase (PS)	Carpet Cuts
Boat to Upper Promenade Deck Size: 9'-11" W x 6'-2" L	12 ft. W x 6.5 ft. L
Upper Promenade to Promenade Deck Size: 10'-1" W x 6.0" L	12 ft. W x 6.0 ft. L
"A" Deck to "B" Deck Size: 9'-11" W x 6'-1" L	12 ft. W x 6.0 ft. L

Aft Staircase (SB)	Carpet Cuts
Upper Promenade to Promenade Deck Size: 10'-0" W x 6.3" L	12 ft. W x 6.5 ft. L
"A" Deck to "B" Deck Size: 9'-11" W x 6'-2" L	12 ft. W x 6.5 ft. L

(continued)

Item No.

41. CARPET REPLACEMENT (CONTINUED)

"B" Deck to "C" Deck Size: 9'-11" W x 6'-2" L	12 ft. W x 6.5 ft. L
Total Blue 4-Square Carpet Required	12 ft. W. x 131 ft. L

Tan 4-Square Carpet Stock - 600 sq. yds ordered (Note: Half for NO)

Main Staircase	**Carpet Cuts**
"A" Deck	12 ft. W x 14 ft. L
Size: 38'-9" W x 13'-11" L	12 ft. W x 14 ft. L
	12 ft.. W x 13 ft. L
"B" Deck	12 ft. W x 14.5 ft. L
Size: 38'-9" W x 14'-4" L	12 ft. W x 14.5 ft. L
	12 ft..W x 14.5 ft. L
	12 ft. W x 14.5 ft. L

Forward Staircase	**Carpet Cuts**
Navigation Deck	
Size: 12'-0" W x 8'-2" L	12 ft. W x 8.5 ft. L
Size" 6'-10" W x 7'-7" L	12 ft. W x 8.0 ft. L
Boat Deck	
Size 12'-2" W x 8'-6" L	12 ft. W x 9 ft. L
Size 6'-10" W x 7'-0" L	12 ft. W x 7.0 ft. L
Upper Promenade Deck	
Size 17'-9" W x 8'-10" L	12 ft. W x 9 ft. L (plus fill)
Size 14'-10" W x 7'-0" L	12 ft. W x 7 ft. L (plus fill)
Promenade Deck	12 ft. W x 10 ft. L
Size 28'-2" W x 9'-10" L	12 ft. W x 10 ft. L
	12 ft. W x 10 ft. L
Main Deck 12 Ft. W x 9 Ft. L	
Size 30'-9" W x 8'-10" L	12 ft. W x 9 ft. L

(continued)

Item No.

41. CARPET REPLACEMENT (CONTINUED)

Tan 4-Square Carpet

Aft Staircase (PS)		**Carpet Cuts**
"A" Deck		12 ft. W x 9 ft. L
Size:	13'-1" W x 7'-8" L	
Aft Staircase (SB)		**CArpet Cuts**
"A" Deck		12 ft. W x 9 ft. L
Size:	13'-1" W x 7'-8" L	
Total 4-Square Carpet Required		12 ft. W. x 214 ft. W

Red Solid Carpet Stock - 300 sq. yds. ordered

Main Square		**Carpet Cuts**
Promenade Deck		12 ft. W x 14.25 ft. L
Size:	39'-1" W x 14'-1" L	12 ft. W x 14.25 ft. L
		12 ft.. W x 14.25 ft. L
		12 ft. W x 14.25 ft. L
Main Deck		12 Ft. W x 14.25 Ft. L
Size:	39'-1" W x 14'-1" L	12 ft. W X 14.25 ft. L
		12 ft.. W x 14.25 ft. L
		(plus fill)
Total Red Solid Carpet Required		12 ft. W. x 100 ft. L

CORRIDORS

Blue/Green Loop Carpet Stock - 1000 sq. yds. ordered (Note: half for NO)

Main Deck
Upper Promenade Deck
Boat Deck

DINING ROOM

Red Swirl Pattern Carpet Stock - 1500 sq. yds. ordered

LIDO INLAY

Green/Blue 4-Square Carpet Stock - 600 sq. yds. ordered (Note: half for NO)

LABOR:	941.S.T.	28,230.00
	275 P.T.	4950.00
MATERIAL:		815.00
SUB-CONTRACTOR:		36,550.00
		$74,566.00

Item No.

42 AUXILIARY GENERATOR L.S. DIESEL ENGINE (ADD-2-45) 5833.00

Furnish labor and material to remove a section of fuel oil return line for the auxiliary generator low speed diesel engine in way of the air start machinery. Deliver the designated 2" x approximately 9' long section of piping to the shop. Clean the section and fabricate a sleeve doubler 6" long and weld to the pipe in way of existing pipe hangers. Pickle the line to remove all scale and sediment from the pipe and install on the ship as original. Modify the hangers, reinstall the tracer tubing and renew the insulation and lagging on the section of pipe.

Clean up and remove all fuel oil drained from piping at removal.

LABOR:	117 S.T.	3510.00
	99 P.T.	1782.00
MATERIAL		196.00
SUB-CONTRACTOR		30.00
		5833.00

Item No.

43 STBD MAIN ENGINE (ADD-2-45) $7,078.00

Furnish labor and material to remove and renew the 2"x 12' long section of the fuel oil return line for the main diesel engine in way of the forward port main engine exhaust gas receiver. Deliver the designated pipe to the shop. Clean the section and fabricate a sleeve doubler 6" long and weld to the pipe in way of existing pipe hangers. Pickle the line to remove all scale and sediment from the pipe and install on the ship as original. Modify hangers, install the tracing tubing and renew the insulation and lagging the full length of the line.

Clean up and remove all fuel oil drained from piping at removal.

LABOR: 144 S.T.	4320.00
117 P.T.	2106.00
MATERIAL:	240.00
SUB-CONTRACTOR	30.00
	$7,078.00

Item No.

44 **PORT PROPELLER SHAFT BULKHEAD STUFFING BOX (ADD-2-52)** 2078.00

Furnish labor and material to repair the port main engine propeller shaft bulkhead stuffing box.

Unbolt and remove the glands and packing assemblies and inspect the stuffing box as to condition and measure alignment and clearances. Reassemble with Owner-furnished packing assemblies as directed.

LABOR: 53 S.T.	1590.00
MATERIAL:	376.00
	2078.00

Item No.

45 STBD INCINERATOR HEAT EXCHANGER (ADD-2-55)

This item is canceled in its entirety.

Item No.

46 PORT INCINERATOR HEAT EXCHANGER (ADD-2-56)

This item is canceled in its entirety.

Item No.

47 DRYDOCK AND DRYDOCK SERVICES

This work is accomplished in another Job Order.

Item No.

48 DRYDOCK SERVICES

This work to be accomplished in another Job Order.

Item No.

49 STBD SHAFT SEAL AND BOOT

This work to be accomplished in another Job Order.

Item No.

50 THIS ITEM NOT USED

Item No.

51. STBD MAIN ENGINE AFT SCAVENGING AIR COOLER (57) 3256.00

Furnish labor and material to renew air seal gaskets on the stbd main engine aft scavenging air cooler.

Disconnect the cooling water inlet and outlet piping and remove the aft bolted air seal ring and the forward air seal ring and spacer ring. Clean air seal surfaces and furnish and install new gaskets and new Owner-furnished "O" rings. Make up all bolting and reinstall all removals.

LABOR:	97 S.T.	2910.00
MATERIAL:		170.00
		3256.00

Item No.

52. PORT MAIN ENGINE AFT SCAVENGING AIR COOLER (58) 3256.00

Furnish labor and material to renew air seal gaskets on the port main engine aft scavenging air cooler.

Disconnect the cooling water inlet and outlet piping and remove the aft bolted air seal ring and the forward air seal ring and spacer ring. Clean air seal surfaces and furnish and install new gaskets and new Owner-furnished "O" rings. Make up all bolting and reinstall all removals.

LABOR 97 S.T.	2910.00
MATERIAL	170.00
	3256.00

Item No.

53. INSPECT PORT MAIN ENGINE SPIROFLEX COUPLING ELEMENT (78) 6315.00

Furnish labor and material to open and inspect the port main engine Spiroflex coupling element.

Remove the coupling expanded metal guards and install rigging.

Remove the Spiroflex coupling to shaft flange bolts, coupling to drive ring bolts and spacer drive sleeve bolts. Back off coupling and remove spacer sleeve halves and move drive ring forward. Clean and inspect all parts and inspect both sides of Spiroflex element as directed.

When directed by Owner's Representative reassemble the coupling in reverse order and torque all bolts as required.

Reinstall all removals as original.

LABOR:	177 S.T.	5310.00
	22 P.T.	396.00
MATERIAL		269.00
		6315.00

Item No.

54. PORT AND STBD LIDO BUFFET COUNTER DECK DRAINS (76) 8634.00

Furnish labor and material to renew the deck drain box trap fitting in way of the inside corners of the Lido Buffet counter, port and stbd.

Remove approximately 4' x 8' section of ceiling panel in the King's and Queen's dining room in way of Lido drains and crop out a 10" x 10" section of terrazzo deck covering around the deck drains. Remove the deck box drain trap and approximately four (4) ft. of 1-1/2" drain line under deck.

Fabricate replacement deck drain box traps approximately 10" long x 6"wide x 6" deep with a baffle to form water air trap and install an outlet nipple using all stainless steel material. Crop out deck in way of original drains approximately 10" x 6" and install the box traps by welding with the top edges of the traps flush with steel deck surface. Fabricate and install perforated stainless steel cover strainers.

Fabricate and install four (4) ft. of 1-1/2" piping from box trap to the existing drain piping using union at the trap and a Dresser coupling at the drain pipe.

Furnish and install replacement terrazzo or equal material to replace deck covering removed.

Reinstall all removals upon completion.

LABOR:	201 S.T.	6030.00
	71 P.T.	1278.00
MATERIAL		525.00
SUB-CONTRACTOR:		335.00
		8634.00

Item No.

55. PORT STEAM EVAPORATOR SHELL (79) 4579.00

Furnish labor and material to repair two (2) 10" long cracks in way of the top inboard surface of the copper nickel shell of the port steam evaporator.

Crop out a 27" long section of two (2) "J" bar deck stiffeners and power sand clean the surface of the shell and drill stopper holes at the crack ends. Vee out and seal weld the cracks and fabricate and install two (2) 1" wide x 11" x 1/8" copper nickel doublers by welding.

Reinstall "J" bar sections and repaint disturbed surfaces.

LABOR:	90 S.T.	2700.00
	84 P.T.	1512.00
MATERIAL		120.00
		4579.00

M/S NIEUW AMSTERDAM JOB NO. 4903

Item No.

56. BILGE WATER SEPARATOR PIPES (84) 355.00

Furnish labor and material to receive three (3) fabricated pipe sections and preserve by hot dip galvanizing process.

One (1) 2" "S" shaped flanged section consisting of two (2) flanges, two (2) 90° elbows and approximately 10" of 2" pipe.

One (1) 2" "L" shaped section consisting of one (1) flange, one (1) coupling and one (1) 90° elbow.

One (1) 2" x 2'-3" section of pipe with one (1) flange.

Return to ship's engine room upon completion.

LABOR: 4 S.T. 120.00

MATERIAL: —

SUB-CONTRACTOR 216.00

355.00

Item No.

57. **WASH WATER PIPING (85)** 239.00

Furnish labor and material to receive two (2) fabricated sections of pipe and preserve by hot dip galvanizing process.

One (1) 2" "S" shaped section consisting of two (2) flanges, two (2) 90° elbows and approximately 12" long pipe.

One (1) 1-1/2" "L" shaped section consisting of two (2) flanges, one (1) 90° elbow, two (2) 1" coupling branches and approximately 9" of pipe.

Return to ship's engine room upon completion.

LABOR: 4 S.T.	120.00
MATERIAL	—
SUB-CONTRACTOR:	106.00
	239.00

Item No.

58. DISHWASHING MACHINE MOTOR (86) 481.00

Furnish labor and material to receive one (1) Hobart dishwashing machine motor and deliver to the electric motor repair facility.

Disassemble, remove and renew stator windings, dip and bake. Clean all parts, furnish and install new bearings, balance and reassemble motor as original. Shop test.

Deliver to ship's engineers upon completion.

DATA:

Mfg.:	Hobart Corp.
Volts:	200/230
RPM:	3450
H.P.:	2
Amps:	5.5
Hz:	60
Model:	No. CS-120

LABOR: 4 S.T. 120.00

SUB-CONTRACTOR. 335.00

481.00

Item No.

59. **PORTABLE EXHAUST FAN MOTOR (87)** 655.00

Furnish labor and material to receive the portable exhaust fan assembly and transport to the electrical repair facility.

Disassemble fan assembly and remove the motor. Disassemble the motor, remove and renew the windings, balance rotor assembly, furnish new bearings, clean all parts and reassemble as original. Reinstall the motor on the fan assembly and deliver unit to the ship's engineers upon completion.

DATA:

Model:	No. AE VD 80 L2
H.P.:	5.5
KW:	8.5
RPM:	1100
Volts:	220

LABOR: 12 S.T.	360.00
SUB-CONTRACTOR	260.00
	655.00

Item No.

60. HEATING COIL STEAM LINES TO NO. 3 (1013) FUEL OIL TANK (75) 5913.00

Furnish labor and material to repair the tank top heating coil steam and condensate lines, two (2) each, 1" IPS penetrations to fuel oil tank No. 3 (1013).

The tank top is in the forward auxiliary room (sewage space).

Crop out the four (4) 1" x approximately 4' long sections from the manifold valves to the tank top penetrations with a power saw. Using existing piping as templates, fabricate replacement sections and bolt to manifold valves and furnish and install a coupling in way of tank top stub end and end of new pipes.

Inert the tank with CO_2 and monitor tank gas condition. Weld couplings to tank top and new piping. Conduct air test of penetration to prove tight.

Furnish and install new flange lagging pads and insulate and lag the new piping.

LABOR:	119 S.T.	3570.00
	57 P.T.	1026.00
MATERIAL:		308.00
SUB-CONTRACTOR:		690.00
		5913.00

Item No.

61. LIFE RAFT FASTENERS (91) N/C

Purchase forty (40) stainless steel hex head bolts with hex nuts and deliver to the ship's force (Chief Officer).

Size: 8mm diameter x 40mm long with 13mm hex head

Item No.

62. STARBOARD MAIN ENGINE FUEL OIL RETURN LINE (92) 3702.00

Furnish labor and material to remove a section of fuel oil return line for the starboard main engine in way of the port main engine exhaust gas receiver. Deliver the designated 2" x approximately 12 ft. long section of piping to the shop. Clean the section and fabricate a sleeve doubler 6"long and weld around line in way of hangers.

Pickle the line to remove all impurities and reinstall as original.

Install the steam tracer tubing and furnish and install insulation and lagging on the pipe line.

Clean up and dispose of oil drained when pipe was removed.

LABOR:	88 S.T.	2640.00
	33 P.T.	594.00
MATERIAL:		238.00
SUB-CONTRACTOR		30.00
		3702.00

Item No.

63. SHOP COMPUTER FOUNDATIONS

This billed in a separate invoice.

M/S NIEUW AMSTERDAM JOB NO. 4903

Item No.

64. NO. 1 LIFEBOAT DAVIT BRAKES $4780.00

Furnish labor and material to transport two (2) brake shoe assemblies to shop; assemblies previously removed by crew.

Using existing shoes as a pattern, fabricate by milling and machining two (2) new brake shoes from 1-3/4" x 8" x 4" aluminum plate each. Assemble the centrifugal brake assembly and transport to the vessel. Reassemble the boat winch and prove operating correctly.

LABOR:	92 S.T.	2760.00
	92 P.T.	1656.00
MATERIAL:		106.00
		4780.00

M/S NIEUW AMSTERDAM JOB NO. 4903

Item No.

65. LIDO DISHWASHING COUNTER $1256.00

Furnish labor and material to furnish and install a water barrier along the athwartship aft dishwashing room counter adjacent to the hinged fore and aft counter. The barrier to be an inverted "U" shaped extrusion approximately two (2) ft. long x 1" high and 1/2" wide at the base. Weld to the counter top and polish weld and counter top upon completion.

LABOR:	24 S.T.	720.00
	24 P.T.	432.00
MATERIAL:		36.00
		1256.00

M/S NIEUW AMSTERDAM JOB NO. 4903

Item No.

66. PORT BOILER 609.00

Furnish labor and material to assist the ship's electrician in trouble shooting the port boiler operation. Remove and test external sensors and electronic control modules. Bypass the shut down circuits to determine cause of malfunctions.

~~Note: Substitute fuel appears to be the problem.~~

LABOR:	12 S.T.	360.00
	12 P.T.	216.00
		609.00

M/S NIEUW AMSTERDAM JOB NO. 4903

Item No.

67 UNDERLAYMENT FOR CARPET $35,912.00

Furnish labor and material to repair the underlayment in way of all carpet renewal areas throughout the vessel.

SUB-CONTRACTOR: $35,912.00

M/S NIEUW AMSTERDAM JOB NO. 4903

Item No.

68 EXTRA CERAMIC TILE $5989.00

Purchase and deliver additional ceramic tile to the ship for spares.

SUB-CONTRACTOR: $5989.00

NORTHWEST MARINE IRON WORKS

SHIP REPAIRERS
GENERAL MACHINE WORK
ENGINEERING

MAIL PAYMENT TO:
P.O. BOX 4000-58
PORTLAND, OREGON 97208

INVOICE

M/V "NIEUW AMSTERDAM" and Owners
c/o Holland America Line
300 Elliott Avenue West
Seattle, WA 98119

DATE	June 29, 1989
OUR JOB NO.	4903
CUSTOMER'S ORDER NO.	
CONTRACT NO.	
INVOICE NO.	4903-3
TERMS	Net upon Receipt

CUSTOMER CODE NUMBER:

Duns No. 00-902-8580

M/V "NIEUW AMSTERDAM"

For furnishing labor, and material to accomplish repairs in accordance with attached specifications.

Total Amount Due This Invoice $ 3,536.00

APPROVED:

J.L. ADRIAANSE
Vice President - Technical

Date: _____

PAST DUE PAYMENTS SHALL BEAR INTEREST AT THE HIGHEST LAWFUL RATE UNTIL REPAID, NOT TO EXCEED 1½% PER MONTH.

CORRESPONDENCE ADDRESS P.O. BOX 3109 PORTLAND, OREGON 97208 PHONE (503) 285-7557

M/S NIEUW AMSTERDAM JOB NO. 4903

Item No.
1 CREDIT CARD TELEPHONE CABLE (ADD-2-54) $3,536.00

Furnish labor and material to install Owner-furnished cable from the radio room to the booth in way of the safe deposit box room at the stbd side of the front desk on Main Deck for the credit card telephone.

The cable run to follow the route of computer cables being installed from the Navigation Deck to the computer room area and connect to the credit card telephone. Remove and reinstall panels in the telephone booth for this installation. This will require approximately three hundred eighty (380) ft. total cable length for two (2) runs.

Furnish and install approximately fifty (50) ft. of T-4 cable and a receptacle for 110 volt power to the above installation.

Labor:	72 straight time	$2,160.00
	48 premium time	864.00
Material		321.00
		$3,536.00

NORTHWEST MARINE IRON WORKS

SHIP REPAIRERS
GENERAL MACHINE WORK
ENGINEERING

MAIL PAYMENT TO:
P.O. BOX 4000-58
PORTLAND, OREGON 97208

INVOICE

M/V "NIEUW AMSTERDAM" and Owners
c/o Holland America Line
300 Elliott Avenue West
Seattle, WA 98119

DATE	June 29, 1989
OUR JOB NO.	4903
CUSTOMER'S ORDER NO.	
CONTRACT NO.	
INVOICE NO.	4903-5
TERMS	Net upon Receipt

CUSTOMER CODE NUMBER:

Duns No. 00-902-8580

M/V "NIEUW AMSTERDAM"

For furnishing labor, and material to accomplish repairs in accordance with attached specifications.

Total Amount Due This Invoice $ 349,445.00

APPROVED:

J.L. ADRIAANSE
Vice President - Technical

Date: _____

PAST DUE PAYMENTS SHALL BEAR INTEREST AT THE HIGHEST LAWFUL RATE UNTIL REPAID, NOT TO EXCEED 1½% PER MONTH.

CORRESPONDENCE ADDRESS P.O. BOX 3109 PORTLAND, OREGON 97208 PHONE (503) 285-7557

M/S NIEUW AMSTERDAM JOB NO. 4903

Item No.
1 COLD FRESH WATER PIPING (6) $349,445.00

Furnish labor and material to receive Owner-furnished pre-fabricated, pre-insulated 1-1/2" copper nickel piping assemblies ready for installation.

Remove and reinstall all interferences including paneling, lighting fixtures and insulation.

Remove all 1-1/2" galvanized cold water piping from the stabilizer room and the coolers up through the upper forward loop and back to source and replace with approximately one thousand five hundred (1500) ft. of the above Owner-furnished piping. All new piping will follow original runs and existing hangers will be reused. All watertight and fireproof barrier penetrations to be sleeved and welded.

Remove the existing galvanized piping from the service room to the stabilizer room and furnish and install approximately eighty (80) ft. of 4" and sixty-eight (68) ft. of 2" copper nickel replacement piping for the forward upper loop supply.

Furnish and install supplementary pipe insulation

Flush and pressure test piping upon completion.

Labor:	7,660 straight time	$229,800.00
	4,486 premium time	80,748.00
Material		20,053.00
		$349.445.00

NORTHWEST MARINE IRON WORKS

SHIP REPAIRERS
GENERAL MACHINE WORK
ENGINEERING

MAIL PAYMENT TO:
P.O. BOX 4000-58
PORTLAND, OREGON 97208

INVOICE

M/V "NIEUW AMSTERDAM" and Owners
c/o Holland America Line
300 Elliott Avenue West
Seattle, WA 98119

DATE	June 29, 1989
OUR JOB NO.	4903
CUSTOMER'S ORDER NO.	
CONTRACT NO.	
INVOICE NO.	4903-6
TERMS	Net upon Receipt

CUSTOMER CODE NUMBER:

Duns No. 00-902-8580

M/V "NIEUW AMSTERDAM"

For furnishing labor, and material to accomplish repairs in accordance with attached specifications.

Total Amount Due This Invoice $ 119,278.00

APPROVED:

J.L. ADRIAANSE
Vice President - Technical

Date: _____

PAST DUE PAYMENTS SHALL BEAR INTEREST AT THE HIGHEST LAWFUL RATE UNTIL REPAID, NOT TO EXCEED 1½% PER MONTH.

CORRESPONDENCE ADDRESS P.O. BOX 3109 PORTLAND, OREGON 97208 PHONE (503) 285-7557

Item No.

1 HANDICAPPED CABINS (23) (A) $119,278.00

Furnish labor and material to install handicapped bathrooms in passenger cabin Nos. 100, 101, 102 and 103 in accordance with drawing No. 0-10-208 and Owner-furnished drawings - location (9/13/88 - (9/14/88).

Furnish and install protection for deck covering and walls in the four (4) cabins and adjacent passageways.

Remove the tubs, W.Cs., lavatory and counter, showers, fixtures and fittings.
NOTE: All new panels, fittings, tile and carpet pieces are Owner-furnished.

Remove, modify and install wall panels in cabins and relocate the entrance doors to cabins Nos. 102 and 103. Remove, modify and install wall panels as necessary in cabin Nos. 101 and 100. Remove and modify ceiling panels in cabins as indicated.

Remove the wardrobe closets in cabin Nos. 102 and 103 and relocate as indicated in drawing but interchange cabins to allow use of existing panels.

Remove all existing bathroom wall panels and ceiling panels.
NOTE: Remove and reinstall ceiling panels in cabins below boat deck in way of work for access to deck as necessary.

Receive all Owner-furnished material and install bathroom wall panels, ceiling panels, deck panels and all W.Cs., lavatory units, shower units, bars and shower curtains.

Furnish material as required and connect drains, sewage, flush lines, hot and cold water lines and insulate as original. Connect all electrical fixtures and devices from existing sources and reuse ceiling fixtures.

Remove existing cabin carpets and remove and relocate the beds. Remove, modify and install the bed headboards and remove and relocate the night tables; two (2) each cabin.

Repair the deck underlayment and form wheelchair ramps from cabin deck level to bathroom deck level in way of the doors, approximately 6-1/2 ft. wide tapered down to deck on all three (3) sides away from walls.

Install new Owner-furnished carpets in all cabins and leave working area clean upon completion.

Furnish labor, material and equipment to remove existing black water lines and relocate to suit final location of bathroom.

Labor:	2,621 straight time	$78,630.00
	1,637 premium time	29,466.00
Material		1,993.00
Subcontractor		2,757.00
		$119,278.00

NORTHWEST MARINE IRON WORKS

SHIP REPAIRERS
GENERAL MACHINE WORK
ENGINEERING

MAIL PAYMENT TO:
P.O. BOX 4000-58
PORTLAND, OREGON 97208

INVOICE

M/V "NIEUW AMSTERDAM" and Owners
c/o Holland America Line
300 Elliott Avenue West
Seattle, WA 98119

DATE	June 29, 1989
OUR JOB NO.	4900
CUSTOMER'S ORDER NO.	
CONTRACT NO.	
INVOICE NO.	4900-2
TERMS	Net upon Receipt

CUSTOMER CODE NUMBER:

Duns No. 00-902-8580

M/V "NIEUW AMSTERDAM"

For furnishing labor, and material to accomplish repairs in accordance with attached specifications.

Total Amount Due This Invoice $ 56,946.00

APPROVED:

J.L. ADRIAANSE
Vice President - Technical

Date: _____

PAST DUE PAYMENTS SHALL BEAR INTEREST AT THE HIGHEST LAWFUL RATE UNTIL REPAID, NOT TO EXCEED 1½% PER MONTH.

CORRESPONDENCE ADDRESS P.O. BOX 3109 PORTLAND, OREGON 97208 PHONE (503) 285-7557

M/V "NIEUW AMSTERDAM"
c/o Holland America Line
300 Elliott Avenue West
Seattle, WA 98119

Job Number 4900

1. Cold Fresh Water Piping $56,946.00

Furnish labor and materials to fabricate approximately fifteen hundred thirty (1530) feet of 1 1/2" cold fresh water piping using Schedule 40 CuNi Pipe. Fabricate one hundred twenty (120) feet of 4", eighty (80) feet of 2" cold fresh water piping using Schedule 40 CuNi Pipe, and forty (40) feet of 2 1/2" Sched 40 CuNi Piping.

Furnish labor and material to insulate fabricated pipe using fibre glass cloth.

Labor:	1,379 straight time hours	$41,370.00
Material		15,576.00
		$56,946.00

NORTHWEST MARINE IRON WORKS

SHIP REPAIRERS
GENERAL MACHINE WORK
ENGINEERING

MAIL PAYMENT TO:
P.O. BOX 4000-58
PORTLAND, OREGON 97208

INVOICE

M/V "NIEUW AMSTERDAM" and Owners
c/o Holland America Line
300 Elliott Avenue West
Seattle, WA 98119

DATE	June 29, 1989
OUR JOB NO.	4903
CUSTOMER'S ORDER NO.	
CONTRACT NO.	
INVOICE NO.	4903-7
TERMS	Net upon Receipt

CUSTOMER CODE NUMBER:

Duns No. 00-902-8580

M/V "NIEUW AMSTERDAM"

For furnishing labor, and material to accomplish repairs in accordance with attached specifications.

Total Amount Due This Invoice $ 541,103.00

APPROVED:

J.L. ADRIAANSE
Vice President - Technical

Date: _____

PAST DUE PAYMENTS SHALL BEAR INTEREST AT THE HIGHEST LAWFUL RATE UNTIL REPAID, NOT TO EXCEED 1½% PER MONTH.

CORRESPONDENCE ADDRESS P.O. BOX 3109 PORTLAND, OREGON 97208 PHONE (503) 285-7557

M/S NIEUW AMSTERDAM JOB NO. 4903

Item No.

1. BERTHAGE (1) CONTRACTOR'S REPAIR FACILITY $3,168.00

Furnish the safe working berth at contractor's facility Berth 304, for the duration of repair availability, May 17 to 22, 1989.

Port of Portland $3,168.00

Item No.

2. BERTHAGE SERVICES (1) $93,595.00

Provide labor, material and equipment to connect, maintain, and disconnect and remove upon completion, the following services.

A. Line handler upon arrival and departure

B. Gangways

C. Crane services

D. Crane rigging services

E. Condensate line

F. Fire protection - three (3) 2-1/2" hoses, one each connected fwd, midships, and one aft.

G. Potable water - two (2) 2-1/2" hoses

H. Telephones - one (1) unrestricted on bridge with two (2) keys, two (2) restricted phones, one at gangway, and one at control room.

I. Pay telephones - two (2) located at "B" deck break.

J. Steam supply - one (1) 2-1/2 connection with filter

K. Gas free certificate for all areas requiring hot work.

L. Fire watch

M. Compressed air

N. Sewage disposal

O. Garbage disposal

Labor:	1,684 straight time	$50,520.00
	462 premium time	8,316.00
Material:		5,008.00
Subcontractor		7,731.00
Port of Portland		17,940.00
		$93,595.00

M/S NIEUW AMSTERDAM JOB NO 4903

ITEM NO. 3 COLD FRESH WATER PIPING (6)

SEPARATE INVOICE

M/S NIEUW AMSTERDAM JOB NO 4903

ITEM NO. 4 COMPUTER CABLE (30)

SEPARATE INVOICE

M/S NIEUW AMSTERDAM JOB NO. 4903

Item No.

5. POTABLE WATER MANIFOLDS (14) $65,781.00

Furnish labor and material to renew the potable water manifolds as directed by Owner's Representative. using Owner furnished material.

Labor: 1,500 straight time
928 premium time

Material: $ 530.00

$65,781.00

Item No.

6. TRANSFERABLE BEDS (31)

This item is canceled in its entirety.

Item No.

7. PASSENGER CABIN BATHROOM WALL GROUTING (27) $6,397.00

Furnish labor and material to repair the grouting in the following passenger cabin bathroom/shower walls:

014, 123, 131, 302, 308, 316, 320, 322, 328, 332, 336, 338, 345, 348, 350, 352, 354, 358, 366, 367, 369, 424, 428, 429, 433, 440, 448, 449, 451, 460, 463, 471, 477, 480, 484, 494, 497, 513, 515, 533, 554, 558, 561, 601, 608, 634, 638, 656, 667, 675, 678, 679, 680, 688, 689, 690, 693, 710, 712, 802, 827, 864, 871, 892, 893, 895, 896, 898, 903.

Subcontractor $6,397.00

M/S NIEUW AMSTERDAM **JOB NO. 4903**

Item No.

8. CO_2 SYSTEM (18) (A) $432.00

Furnish labor and material to inspect CO_2 system for re-certification.

A.
Furnish labor and material to furnish and install four hundred (400) inspection tags.

Subcontractor $432.00

M/S NIEUW AMSTERDAM JOB NO. 4903

Item No.

9. HALON SYSTEM (19) $359.00

Furnish labor and material to inspect and recertify the Halon system for the following.

1. Separator Room
2. Incinerator Room
3. Paint Storage
4. Vent Duct "B" Deck Pantry
5. Vent Duct Main Deck Galley
6. Vent Hood Lido Pantry

Subcontractor $359.00

Item No.

10. FIRE EXTINGUISHERS (20) (A) $842.00

Furnish labor and material to inspect and recertify the following fire extinguishers:

One (1) pc.	136 liter	wheeled foam unit
Twenty-eight (28)pcs.	6kg	CO_2 fire extinguishers
Six (6)pcs.	2kg	CO_2 fire extinguishers
Eight (8) pcs.	2kg	powder fire extinguishers
Sixteen (16) pcs.	5 lbs.	powder fire extinguishers
Four (4) pcs.	3 lbs.	Halon fire extinguishers
Two (2) pcs.	2 lbs.	Halon fire extinguishers

A.
Furnish labor and material to accomplish the additional work in conjunction with portable fire extinguisher inspection.

Purchase:	Five (5)	5# ABC extinguishers
	Seventeen (17)	5# Universal brackets
	Two (2)	2-1/2# Halon extinguishers
Recharge:	One (1)	15# CO_2 extinguisher
	One (1)	2-1/2# Halon extinguisher

Subcontractor $842.00

Item No.

11. FLOOR DECK REPAIRS (29) $10,607.00

Furnish labor and material to repair the damaged floor and retile when complete. Chip away all tile and underlayment as necessary to repair deck. Repair underlayments and retile using contractor furnished material.

The following locations are effected:

a. Men's toilet outside upper Prom aft

b. Men's sauna dressing room - Navigation deck

c. Pantry Explorer's lounge

NOTE: Water under tiles in b. and c.

Labor:	101 straight time	$ 3,030.00
	20 premium time	360.00
Material		223.00
Subcontractor		6,422.00
		$10,607.00

Item No.

12. COLD SURGE WATER LINE-CO_2 ROOM (8)

This item is canceled in its entirety.

M/S NIEUW AMSTERDAM **JOB NO. 4903**

Item No.

13. LIFEBOAT INSPECTIONS (21) $7,722.00

Furnish labor, material and equipment to inspect Nos. 1, 2, 3, and 4 lifeboats. Rig boats from ship to shore, and support boats with appropriate cribbing. Remove interior panels to expose suspension plates. Upon completion of inspection by Owner's Representative and regulatory bodies, reinstall all removed interferences and restow boats onboard.

Labor:	232 straight time	$6,960.00
	16 premium time	288.00
Material		58.00
		$7,722.00

M/S NIEUW AMSTERDAM JOB NO. 4903

Item No.

14. LIFEBOAT DAVITS (22) $22,356.00

Furnish labor, material and equipment including staging to inspect the davits for Nos. 1, 2, 3, and 4 lifeboats. Remove falls and roller pins and rig skates from ship to shop. Open out, clean, measure, and inspect all sheaves and rollers. Submit a report to Owner's Representative of existing clearances and conditions found. When directed by Owner's Representative reassemble sheaves and rollers and reinstall skates as original. Reinstall falls and clean up working area upon completion.

Labor:	618 straight time	$18,540.00
	110 premium time	1,980.00
Material:		630.00
		$22,356.00

M/S NIEUW AMSTERDAM JOB NO 4903

ITEM NO. 15 HANDICAPPED CABINS (23)(A)

SEPARATE INVOICE

Item No.

16. CABIN PORTHOLES (24) (A) $32,978.00

Furnish labor, material and equipment to remove designated cabin porthole, frames, seals and porthole glasses. Clean out frame sealing areas and install new Owner-furnished sealing material and install the porthole glass as original. Dress the sealing material neatly around the internal and external edges of the glass frame. Replace any damaged studs or screws. Protect adjacent areas from being soiled or damaged.

When complete, hose test the repaired portholes for Owner's Representative and regulatory bodies.

The designated cabins are:

Main Deck	344
"A" Deck	460, 480, 482, 484, 486, 496, 520, 548, 558
"B" Deck	628, 629, 636, 640, 652, 654, 656, 660, 664, 668, 675, 680, 687, 688 692, 706, 714
"C "Deck	814, 844, 870, 878, 882, 886, 890 898, 902, 857, 861, 901

NOTE: Cabin No. 344 is a 21" x 30" window.
Cabin Nos. 460 through 901 are 15" portholes at one (1) per cabin.

A.
Furnish labor and material to accomplish work as described in Item No. 16 to reseal the additional portholes in the following listed cabins.

Nos. 873, 639, 700, 877, 704, 881, 885, 897, 821 and 867.

Labor:	760 straight time	$22,800.00
	345 premium time	6,210.00
Material		407.00
Subcontractor		1,783.00
		$32,978.00

M/S NIEUW AMSTERDAM **JOB NO. 4903**

Item No.

17. **CABIN BATHROOM STEEL FLOORS (25)** $5,016.00

Furnish labor and material to install a new metal floor in the bathroom/shower and retile afterwards in the following passenger cabins.

a) Cabin No. 127 Shower floor (Boat)

b) Cabin No. 129 Shower floor (Boat)

c) Cabin No. 147 Bathroom floor (Boat)

c) Cabin No. 225 Bathroom floor (UP)

Labor:	78 straight time	$2,340.00
Material		335.00
Subcontractor		2,070.00
		$5,016.00

Item No.

18. HOT WATER PIPE - CASINO (7) $1,957.00

Furnish labor and material to renew a section of hot water pipe located above overhead panels in Casino. Remove overhead panels as necessary to gain access. Remove and renew the 12mm x 2 feet of copper pipe.

Test pipe to prove tight and reinstall overhead panels.

Labor:	56 straight time	$1,680.00
	5 premium time	90.00
Material		81.00
		$1,957.00

Item No.

19. DANCE FLOORS (17) $17,451.00

a) Furnish labor and material to remove the top layer of wood flooring including border (Pear Tree Lounge) on the dance floors in the Pear Tree Lounge and the Henry Hudson Lounge, being careful not to damage plywood sub floor. Clean sub floor and furnish and install white oak flooring on the Pear Tree Lounge dance floor and teak wood flooring on the Henry Hudson dance floor. Sand and varnish floors using three (3) coats of moisture curing Urethane varnish.

b) Furnish labor and material to sand and varnish the dance and stage floors in the Stuyvesant lounge using three (3) coats of moisture curing Urethane varnish.

Furnish protection for adjacent carpeting and remove upon completion.

Labor:	79 straight time	$2,370.00
	33 premium time	594.00
Material		176.00
Subcontractor		13,370.00
		$17,451.00

Item No.

20. IDENTIFICATION SIGNS (28) $2,338.00

Furnish labor and material to renew or repair the blue/gold lettering in the following areas.

a) Front and back doors of Pear Tree Club and Partridge Bar (UP)

b) Entrance door to Hudson Lounge (Promenade) forward port side

c) One (1) back entrance door to (Promenade) Stuyvesant Lounge

d) Lido sign on four (4) glass (Promenade) windows of Lido Restaurant.

Subcontractor $2,338.00

Item No.

21. CONVECTION OVENS - MAIN KITCHEN (11) $10,820.00

Furnish labor and material to renew the three (3) convection and hot plates ovens located in main kitchen. Disconnect electrically, unbolt from foundations and dispose of the three (3) existing convection ovens.

Rig in and set in place three (3) new Owner-furnished convection ovens and hot plates. Bolt down and reconnect electrically and prove operational.

Install flashing in way of bulkheads all around and seal as required by USPH.

Labor:	213 straight time	$6,390.00
	192 premium time	3,456.00
Material		390.00
		$10,820.00

Item No.

22. HOT PLATES - MAIN KITCHEN (12)(A) $21,029.00

Furnish labor and material to remove one (1) oven/hot plate unit and two (2) tilt fryer units now existing in a line from forward to aft (hot plate, tilt fryer and tilt fryer) to scrap.

Take delivery and install one (1) new hot plate unit and two (2) new tilt fryer units furnished by Owner's in a line forward to aft (tilt fryer, tilt fryer and hot plate unit).

Modify all connections as to new positions.

Remove the deck tile and underlayment in way of the tilt fryer bases and furnish and install inverted "U" shaped stainless steel foundations approximately 6" wide x 6" high x 3' long in way of each end of the bases; total of four (4). Reinstall underlayment and deck tile removed when completed.

A.
Furnish labor and material to convert the two (2) tilt fryers from 440 volt wiring and circuits to 220 volt wiring and circuits.

a. Re-strap the element hook-up.

b. Furnish approximately thirty (30) ft. of No. 6/3 wire and rewire the internal power circuits.

c. Exchange the contacts with Owner-furnished 220 volt contacts.

d. Modify the control circuits to 220 volts.

e. Furnish and install stainless steel junction boxes and sheet metal cable covers to extend the power cables to the two (2) units.

Labor:	460 straight time	$13,800.00
	222 premium time	3,996.00
Material		291.00
Subcontractor		1,808.00
		$21,029.00

M/S NIEUW AMSTERDAM JOB NO. 4903

Item No.

23. MOORING/WINDLASS BRAKE BANDS (15) $2,765.00

Furnish labor and material to remove and inspect brake bands on the port and stbd mooring windlasses. Disconnect linkages, clean and examine the brake band linings. Needle gun scale the brake drums to a smooth surface.

When directed by Owner's Representative, assemble and reinstall both brake bands, connect linkages and adjust the assemblies.

Labor:	86 straight time	$2,580.00
Material		36.00
		$2,765.00

Item No.

24. PASSENGER CABIN BATHROOM FLOOR GROUTING (26) $3,507.00

Furnish labor and material to repair grouting in the following passenger cabin bathroom/ shower floors:

300, 314, 316, 320, 321, 322, 324, 326, 328, 332, 334, 336, 338, 345, 348, 350, 351, 352, 357, 401, 403, 411, 415, 417, 419, 441, 445, 448, 463, 486, 489, 492, 493, 494, 496, 497, 499, 501, 505, 506, 509, 510, 511, 512, 513, 515, 516, 517, 518, 521, 522, 525, 531, 534, 536, 537, 538, 539, 540, 542, 543, 546, 548, 550, 552, 555, 558, 560, 561, 603, 608, 609, 632, 634, 640, 649, 651, 653, 656, 662, 664, 666, 667, 668, 669, 670, 672, 676, 679, 682, 683, 684, 685, 693, 702, 705, 710, 711, 712, 807, 819, 827, 828, 839, 840, 841, 849, 855, 864, 865, 868, 872, 873, 882, 889, 892, 898, 899, 900, 902.

Subcontractor $3,507.00

Item No.

25. FAN DUCTING (3) $3,404.00

Furnish labor, material and equipment to renew a section of eroded vent ducting in fan room A-2. Ducting for renewal is eight (8) ft. long, 15" x 25" rectangular duct with a 45° elbow at one end. Renew ducting from transition elbow to first rivet band. Prime and coat as original.

Labor:	77 straight time	$2,310.00
	42 premium time	756.00
Material		154.00
		$3,404.00

M/S NIEUW AMSTERDAM JOB NO. 4903

Item No.

26. AIR VENT (16) $4,490.00

Furnish labor and equipment to open out for Lloyd's inspector fifteen (15) ballast tank (ball type) air vent valves. Remove retaining plates and ball. Clean balls and seats for Owner's Representative and Lloyd's Surveyor inspection. Upon completion of inspection close valves as original.

The locations will be determined before arrival of the vessel.

Labor:	135 straight time	$4,050.00
Material		198.00
		$4,490.00

Item No.

27. STARBOARD MAIN ENGINE STEP GEAR ALIGNMENT CHECK (13) $498.00

Furnish labor and equipment to check the alignment between the starboard main engine step up gear, output shaft, and starboard main generator. Remove required guards and set up dial indicators to read face and rim run outs of Spiro-Flex coupling. Indicator will bridge rubber elements. Submit alignment reading to Owner's Representative and upon approval, reinstall removed interferences.

Labor:	15 straight time	$450.00
Material		21.00

Item No.

28. TANK TOP PENETRATIONS DOUBLE BOTTOM FUEL OIL TANK 1016 (10) $7,031.00

Furnish labor, material and equipment to renew four (4) leaking tank top penetrations in fuel oil tank 1016. Crop out four (4) 1" steam pipes, two (2) supply and two (2) exhaust for heating coils from manifold valve flanges down to the tank top penetration coupling with power saw. Using existing piping for template, fabricate replacement sections and bolt to manifold valves and furnish and install a coupling in way of tank top stub end and end of new pipes.

Inert tank with CO_2 and monitor tank gas condition. Weld couplings to tank top and new pipes to seal penetration and piping.

Conduct air test of penetration to prove tight.

Furnish and install new flange lagging pads and insulate and lag the new piping.

Labor:	126 straight time	$3,780.00
	92 premium time	1,656.00
Material		466.00
Subcontractor		750.00
		$7,031.00

Item No.

29. TANK TOP PENETRATIONS DOUBLE BOTTOM FUEL OIL TANK 1015 (9) $5,625.00

Furnish labor, material and equipment to renew four (4) leaking tank top penetrations in fuel oil tank 1015. Crop out two (2) 1" steam supply pipes for heating coils, from manifold valves and crop out two (2) 3/4" steam return pipes from manifold valves to the tank top penetrations with a power saw. Using existing piping for templates, fabricate replacement sections and bolt to manifold valves and furnish and install a coupling in way of tank top stub end and end of new pipes.

Inert the tank with CO_2 and monitor tank gas condition. Weld couplings to tank top and new pipes to seal penetration and piping.

Conduct air test of penetration to prove tight.

Furnish and install new flange lagging pads and insulate and lag the new piping.

Labor:	112 straight time	$3,360.00
	49 premium time	882.00
Material		330.00
Subcontractor		750.00
		$5,625.00

Item No.

30. PORT AND STBD OIL FIRED BOILER BLOWDOWN VALVES (5)

This item is canceled in its entirety.

Item No.

31. BALLAST TANK NO. 5 (4)

This item is canceled in its entirety.

Item No.

32. CROSSOVERS (2)

This item is canceled in its entirety.

M/S NIEUW AMSTERDAM JOB NO. 4903

Item No.

33. SHIP'S STORE $3,101.00

Furnish services of riggers and crane service to assist in loading and stowage of vessel's stores and provisions.

Labor:	72 straight time	$2,160.00
	43 premium time	774.00
		$3,101.00

Item No.

34. OWNER-FURNISHED MATERIAL $3,197.00

Furnish labor, material and equipment to receive and store Owner-furnished material and equipment to be used during the vessel's availability period in shipyard. Clear all material/equipment through U.S. Customs.

Deliver material/equipment to vessel when directed. Furnish all fees, freight and transportation charges.

Labor:	44 straight time	$1,320.00
	16 premium time	288.00
Material		439.00
Freight		978.00
		$3,197.00

M/S NIEUW AMSTERDAM JOB NO. 4903

Item No.

35. SUPPORT LABOR $18,877.00

Furnish support labor as required during vessel's availability period.

Labor:	381 straight time	$11,430.00
	345 premium time	6,210.00
Material		219.00
		$18,877.00

Item No.

36. WALK-IN REFRIGERATOR DOORS MAIN KITCHEN $10,274.00

Furnish labor and material to receive two (2) Owner-furnished walk-in refrigerator doors with frames and install in the salad kitchen and vegetable kitchen walk-in refrigerator entrances.

Remove the existing doors with frames including thresholds and prepare entrance openings for new installation including chipping out the tile and underlayment in way of the entrance sills. Transport the two (2) new doors to the main kitchen. Fit in the openings and install with sealing compound in way of frames and bulkhead. Secure by bolting. Install filler insulation and furnish and install 2" wide flashing around frames and seal all joints as required by USPH.

Remove and reinstall approximately fifty (50) ft. of ceiling panels and furnish and install approximately fifty (50) ft. of power cable and hardware to the new door assembly heaters.

Furnish and install underlayment and tile where removed in way of door sills and install Owner-furnished door sills.

Clean up all debris and leave working space clean upon completion.

Labor:	251 straight time	$7,530.00
	80 premium time	1,440.00
Material		503.00
Subcontractor		247.00
		$10,274.00

Item No.

37. DECK TILE IN WALK-IN REFRIGERATORS IN MAIN KITCHEN

This item is canceled in its entirety.

Item No.

38. DISHWASHER TABLE - LIDO DISHWASHING ROOM (Add-2-48)

This item is canceled in its entirety.

Item No.

39. PLEXUS COMPUTER SYSTEM (ADD-2-54)

This item is canceled in its entirety.

M/S NIEUW AMSTERDAM JOB NO 4903

ITEM NO. 40 CREDIT CARD TELEPHONE CABLE (ADD-2-54)

SEPARATE INVOICE

Item No.

41. CARPET REPLACEMENT $74,566.00

Furnish labor and material to remove and dispose of the existing carpet. Clean the surface of the underlayment and install new Owner-furnished carpet with necessary adhesive.

NOTE: Repairs to the underlayment will be covered under an additional item

The designated areas are listed herein.

PASSENGER CABINS - TOTAL QUANTITY - FORTY (40) CABINS

Green Carpet Stock = Five (5) rolls

Approximately five hundred (500) yds @ NMIW
Approximately twenty (20) cabins
Five hundred (500) yards ordered 1989
Approximately twenty (20) cabins

Sun Deck

004 (BL)	012 (BL)
005 (B*)	015 (BL)
006 (BR)	018 (BL)
009 (BL)	020 (BR)
011 (BR)	

Navigation Deck

062(B*)	075(B*)
078(BL)	086(BL)

Boat Deck

102(B*)
125(A1)
143(BR)

Upper Promenade Deck

200(B*)	206(BR*)
211(BL)	212(BL)
218(B1)	225(BR)

Main Deck

369(EL)

"A" Deck PS	"A" Deck SB
460(EL)	413 (E*)
508(CR)	419(E*)
512(CL)	499(CL)
520(CL)	511(CR)
524(CR)	

*-Indicates "non-standard"

(continued)

Item No.

41. CARPET REPLACEMENT (CONTINUED)

"B" Deck PS
600(EL)

"C"Deck PS
844 (EL)
860(CL)
874(CL)

Blue Carpet — Stock onboard M/S NIEUW AMSTERDAM

Boat Deck
055 (A2)
120(A2)

"A" Deck SB
537(DR)

"C" Deck PS
818(DR)

STAIRCASE STEPS

Solid Blue Carpet	Stock	9'-2" wide	1-1/2 rolls @ NMIW
		9'-2" wide	1 roll @ N.A.
		12'-0" wide	1/2 roll @ NMIW

Main Staircase	Carpet Cuts
Navigation to Sun Deck (SB)	
Upper and lower stair split	9 ft. W. x 8.5 ft. L.
Upper Promenade to Boat Deck (PS)	
Upper and lower stair split	9 ft. W. x 8.5 ft. L.
"C" Deck to "B" Deck	
Upper and lower stair split	9 ft. W. x 8.5 ft. L
Aft Staircase	Carpet Cuts
Navigation to Sun Deck (SB)	
Upper and lower stair split	9 ft. W. x 8.5 ft. L.
"C" Deck to "B" Deck	
Upper and lower stair split	9 ft. W. x 8.5 ft. L
Total Blue Solid Carpet Required	9 ft. W. x 43 ft. L

(continued)

Item No.

41. CARPET REPLACEMENT (CONTINUED)

STAIRCASE LANDINGS

Blue 4-Square Carpet Stock - 500 sq. yds. ordered (Note: Half for NO)

Main Staircase	Carpet Cuts
Navigation to Sun Deck Size: 10'-1" W x 6'-2" L	12 ft. W x 6.5 ft. L
Navigation to Boat Deck Size: 10'-1" W x 6'-0" L	12 ft. W x 6.0 ft. L
Upper Promenade to Boat Deck(SB) Size: 13'-4" W x 6'-1" L	12 ft. W x 6.0 ft. L (plus fill)
"A" Deck to Main Deck Size: 37'-9" W x 11'-0" L	12 ft. W x 11.0 ft. L 12 ft. W x 11.0 ft. L 12 ft. W x 11.0 ft. L (plus fill)

Forward Staircase	Carpet Cuts
Boat to Upper Promenade Deck Size: 11'-1" W x 6'-9" L	12 ft. W x 7.0 ft. L
Promenade to Main Deck Size: 16'-7" W x 9'-4" L	12 ft. W x 9.5 ft. L 12 ft. W x 9.5 ft. L
Main to "A" Deck Size: 16'-7" W x 8'-2" L	12 ft. W x 8.5 ft. L (plus fill)
"A" Deck to "B" Deck Size: 11'-8" W x 7'-0" L	12 ft. W x 9.5 ft. L

Aft Staircase (PS)	Carpet Cuts
Boat to Upper Promenade Deck Size: 9'-11" W x 6'-2" L	12 ft. W x 6.5 ft. L
Upper Promenade to Promenade Deck Size: 10'-1" W x 6.0" L	12 ft. W x 6.0 ft. L
"A" Deck to "B" Deck Size: 9'-11" W x 6'-1" L	12 ft. W x 6.0 ft. L

Aft Staircase (SB)	Carpet Cuts
Upper Promenade to Promenade Deck Size: 10'-0" W x 6.3" L	12 ft. W x 6.5 ft. L
"A" Deck to "B" Deck Size: 9'-11" W x 6'-2" L	12 ft. W x 6.5 ft. L

(continued)

Item No.

41. CARPET REPLACEMENT (CONTINUED)

"B" Deck to "C" Deck Size: 9'-11" W x 6'-2" L	12 ft. W x 6.5 ft. L
Total Blue 4-Square Carpet Required	12 ft. W. x 131 ft. L

Tan 4-Square Carpet Stock - 600 sq. yds ordered (Note: Half for NO)

Main Staircase	Carpet Cuts
"A" Deck Size: 38'-9" W x 13'-11" L	12 ft. W x 14 ft. L 12 ft. W x 14 ft. L 12 ft.. W x 13 ft. L
"B" Deck Size: 38'-9" W x 14'-4" L	12 ft. W x 14.5 ft. L 12 ft. W x 14.5 ft. L 12 ft..W x 14.5 ft. L 12 ft. W x 14.5 ft. L

Forward Staircase	Carpet Cuts
Navigation Deck	
Size: 12'-0" W x 8'-2" L	12 ft. W x 8.5 ft. L
Size" 6'-10" W x 7'-7" L	12 ft. W x 8.0 ft. L
Boat Deck	
Size 12'-2" W x 8'-6" L	12 ft. W x 9 ft. L
Size 6'-10" W x 7'-0" L	12 ft. W x 7.0 ft. L
Upper Promenade Deck	
Size 17'-9" W x 8'-10" L	12 ft. W x 9 ft. L (plus fill)
Size 14'-10" W x 7'-0" L	12 ft. W x 7 ft. L (plus fill)
Promenade Deck Size 28'-2" W x 9'-10" L	12 ft. W x 10 ft. L 12 ft. W x 10 ft. L 12 ft. W x 10 ft. L
Main Deck 12 Ft. W x 9 Ft. L Size 30'-9" W x 8'-10" L	12 ft. W x 9 ft. L

(continued)

Item No.

41. CARPET REPLACEMENT (CONTINUED)

Tan 4-Square Carpet

Aft Staircase (PS)		**Carpet Cuts**
"A" Deck		12 ft. W x 9 ft. L
Size:	13'-1" W x 7'-8" L	
Aft Staircase (SB)		**CArpet Cuts**
"A" Deck		12 ft. W x 9 ft. L
Size:	13'-1" W x 7'-8" L	
Total 4-Square Carpet Required		12 ft. W. x 214 ft. W

Red Solid Carpet Stock - 300 sq. yds. ordered

Main Square		**Carpet Cuts**
Promenade Deck		12 ft. W x 14.25 ft. L
Size:	39'-1" W x 14'-1" L	12 ft. W x 14.25 ft. L
		12 ft.. W x 14.25 ft. L
		12 ft. W x 14.25 ft. L
Main Deck		12 Ft. W x 14.25 Ft. L
Size:	39'-1" W x 14'-1" L	12 ft. W X 14.25 ft. L
		12 ft.. W x 14.25 ft. L
		(plus fill)
Total Red Solid Carpet Required		12 ft. W. x 100 ft. L

CORRIDORS

Blue/Green Loop Carpet Stock - 1000 sq. yds. ordered (Note: half for NO)

Main Deck
Upper Promenade Deck
Boat Deck

DINING ROOM

Red Swirl Pattern Carpet Stock - 1500 sq. yds. ordered

LIDO INLAY

Green/Blue 4-Square Carpet Stock - 600 sq. yds. ordered (Note: half for NO)

Labor:	941 straight time	$28,230.00
	274 premium time	4,950.00
Material		815.00
Subcontractor		36,550.00
		$74,566.00

Item No.

42 AUXILIARY GENERATOR L.S. DIESEL ENGINE (ADD-2-45) $5,833.00

Furnish labor and material to remove a section of fuel oil return line for the auxiliary generator low speed diesel engine in way of the air start machinery. Deliver the designated 2" x approximately 9' long section of piping to the shop. Clean the section and fabricate a sleeve doubler 6" long and weld to the pipe in way of existing pipe hangers. Pickle the line to remove all scale and sediment from the pipe and install on the ship as original. Modify the hangers, reinstall the tracer tubing and renew the insulation and lagging on the section of pipe.

Clean up and remove all fuel oil drained from piping at removal.

Labor:	117 straight time	$3,510.00
	99 premium time	1,782.00
Material		196.00
Subcontractor		30.00
		$5,833.00

Item No.

43 STBD MAIN ENGINE (ADD-2-45) $7,078.00

Furnish labor and material to remove and renew the 2"x 12' long section of the fuel oil return line for the main diesel engine in way of the forward port main engine exhaust gas receiver. Deliver the designated pipe to the shop. Clean the section and fabricate a sleeve doubler 6" long and weld to the pipe in way of existing pipe hangers. Pickle the line to remove all scale and sediment from the pipe and install on the ship as original. Modify hangers, install the tracing tubing and renew the insulation and lagging the full length of the line.

Clean up and remove all fuel oil drained from piping at removal.

Labor:	144 straight time	$4,320.00
	117 premium time	2,106.00
Material		240.00
Subcontractor		30.00
		$7,078.00

Item No.

44 PORT PROPELLER SHAFT BULKHEAD STUFFING BOX (ADD-2-52) $2,078.00

Furnish labor and material to repair the port main engine propeller shaft bulkhead stuffing box.

Unbolt and remove the glands and packing assemblies and inspect the stuffing box as to condition and measure alignment and clearances. Reassemble with Owner-furnished packing assemblies as directed.

Labor:	53 straight time	$1,590.00
Material		376.00
		$2,078.00

Item No.

45 STBD INCINERATOR HEAT EXCHANGER (ADD-2-55)

This item is canceled in its entirety.

Item No.

46 PORT INCINERATOR HEAT EXCHANGER (ADD-2-56)

This item is canceled in its entirety.

Item No.

47 DRYDOCK AND DRYDOCK SERVICES

This work is accomplished in another Job Order.

Item No.

48 DRYDOCK SERVICES

This work to be accomplished in another Job Order.

Item No.

49 STBD SHAFT SEAL AND BOOT

This work to be accomplished in another Job Order.

Item No.

50 THIS ITEM NOT USED

Item No.

51. **STBD MAIN ENGINE AFT SCAVENGING AIR COOLER (57)** $3,256.00

Furnish labor and material to renew air seal gaskets on the stbd main engine aft scavenging air cooler.

Disconnect the cooling water inlet and outlet piping and remove the aft bolted air seal ring and the forward air seal ring and spacer ring. Clean air seal surfaces and furnish and install new gaskets and new Owner-furnished "O" rings. Make up all bolting and reinstall all removals.

Labor: 97 straight time	$2,910.00
Material	170.00
	$3,256.00

Item No.

52. PORT MAIN ENGINE AFT SCAVENGING AIR COOLER (58) $3,256.00

Furnish labor and material to renew air seal gaskets on the port main engine aft scavenging air cooler.

Disconnect the cooling water inlet and outlet piping and remove the aft bolted air seal ring and the forward air seal ring and spacer ring. Clean air seal surfaces and furnish and install new gaskets and new Owner-furnished "O" rings. Make up all bolting and reinstall all removals.

Labor: 97 straight time	$2,910.00
Material	170.00
	$3,256.00

Item No.

53. **INSPECT PORT MAIN ENGINE SPIROFLEX COUPLING ELEMENT (78)** $6,315.00

Furnish labor and material to open and inspect the port main engine Spiroflex coupling element.

Remove the coupling expanded metal guards and install rigging.

Remove the Spiroflex coupling to shaft flange bolts, coupling to drive ring bolts and spacer drive sleeve bolts. Back off coupling and remove spacer sleeve halves and move drive ring forward. Clean and inspect all parts and inspect both sides of Spiroflex element as directed.

When directed by Owner's Representative reassemble the coupling in reverse order and torque all bolts as required.

Reinstall all removals as original.

Labor:	177 straight time	$5,310.00
	22 premium time	396.00
Material		268.00
		$6,315.00

Item No.

54. **PORT AND STBD LIDO BUFFET COUNTER DECK DRAINS (76)** $8,634.00

Furnish labor and material to renew the deck drain box trap fitting in way of the inside corners of the Lido Buffet counter, port and stbd.

Remove approximately 4' x 8' section of ceiling panel in the King's and Queen's dining room in way of Lido drains and crop out a 10" x 10" section of terrazzo deck covering around the deck drains. Remove the deck box drain trap and approximately four (4) ft. of 1-1/2" drain line under deck.

Fabricate replacement deck drain box traps approximately 10" long x 6"wide x 6" deep with a baffle to form water air trap and install an outlet nipple using all stainless steel material. Crop out deck in way of original drains approximately 10" x 6" and install the box traps by welding with the top edges of the traps flush with steel deck surface. Fabricate and install perforated stainless steel cover strainers.

Fabricate and install four (4) ft. of 1-1/2" piping from box trap to the existing drain piping using union at the trap and a Dresser coupling at the drain pipe.

Furnish and install replacement terrazzo or equal material to replace deck covering removed.

Reinstall all removals upon completion.

Labor:	201 straight time	$6,030.00
	71 premium time	1,278.00
Material		525.00
Subcontractor		335.00
		$8,634.00

Item No.

55. PORT STEAM EVAPORATOR SHELL (79) $4,579.00

Furnish labor and material to repair two (2) 10" long cracks in way of the top inboard surface of the copper nickel shell of the port steam evaporator.

Crop out a 27" long section of two (2) "J" bar deck stiffeners and power sand clean the surface of the shell and drill stopper holes at the crack ends. Vee out and seal weld the cracks and fabricate and install two (2) 1" wide x 11" x 1/8" copper nickel doublers by welding.

Reinstall "J" bar sections and repaint disturbed surfaces.

Labor:	90 straight time	$2,700.00
	84 premium time	1,512.00
Material		120.00
		$4,579.00

Item No.

56. **BILGE WATER SEPARATOR PIPES (84)** $355.00

Furnish labor and material to receive three (3) fabricated pipe sections and preserve by hot dip galvanizing process.

One (1) 2" "S" shaped flanged section consisting of two (2) flanges, two (2) 90° elbows and approximately 10" of 2" pipe.

One (1) 2" "L" shaped section consisting of one (1) flange, one (1) coupling and one (1) 90° elbow.

One (1) 2" x 2'-3" section of pipe with one (1) flange.

Return to ship's engine room upon completion.

Labor: 4 straight time	$120.00
Material	-0-
Subcontractor	216.00
	$355.00

Item No.

57. WASH WATER PIPING (85) $239.00

Furnish labor and material to receive two (2) fabricated sections of pipe and preserve by hot dip galvanizing process.

One (1) 2" "S" shaped section consisting of two (2) flanges, two (2) 90° elbows and approximately 12" long pipe.

One (1) 1-1/2" "L" shaped section consisting of two (2) flanges, one (1) 90° elbow, two (2) 1" coupling branches and approximately 9" of pipe.

Return to ship's engine room upon completion.

Labor: 4 straight time	$120.00
Material	-0-
Subcontractor	106.00
	$239.00

M/S NIEUW AMSTERDAM **JOB NO. 4903**

Item No.

58. **DISHWASHING MACHINE MOTOR (86)** $481.00

Furnish labor and material to receive one (1) Hobart dishwashing machine motor and deliver to the electric motor repair facility.

Disassemble, remove and renew stator windings, dip and bake. Clean all parts, furnish and install new bearings, balance and reassemble motor as original. Shop test.

Deliver to ship's engineers upon completion.

DATA:

Mfg.:	Hobart Corp.
Volts:	200/230
RPM:	3450
H.P.:	2
Amps:	5.5
Hz:	60
Model:	No. CS-120

Labor: 4 straight time	$120.00
Subcontractor	335.00
	$481.00

Item No.

59. **PORTABLE EXHAUST FAN MOTOR (87)** $655.00

Furnish labor and material to receive the portable exhaust fan assembly and transport to the electrical repair facility.

Disassemble fan assembly and remove the motor. Disassemble the motor, remove and renew the windings, balance rotor assembly, furnish new bearings, clean all parts and reassemble as original. Reinstall the motor on the fan assembly and deliver unit to the ship's engineers upon completion.

DATA:

Model:	No. AE VD 80 L2
H.P.:	5.5
KW:	8.5
RPM:	1100
Volts:	220

Labor: 12 straight time	$360.00
Subcontractor	260.00
	$655.00

Item No.

60. HEATING COIL STEAM LINES TO NO. 3 (1013) FUEL OIL TANK (75) $5,913.00

Furnish labor and material to repair the tank top heating coil steam and condensate lines, two (2) each, 1" IPS penetrations to fuel oil tank No. 3 (1013).

The tank top is in the forward auxiliary room (sewage space).

Crop out the four (4) 1" x approximately 4' long sections from the manifold valves to the tank top penetrations with a power saw. Using existing piping as templates, fabricate replacement sections and bolt to manifold valves and furnish and install a coupling in way of tank top stub end and end of new pipes.

Inert the tank with CO_2 and monitor tank gas condition. Weld couplings to tank top and new piping. Conduct air test of penetration to prove tight.

Furnish and install new flange lagging pads and insulate and lag the new piping.

Labor:	119 straight time	$3,570.00
	57 premium time	1,026.00
Material		308.00
Subcontractor		690.00
		$5,913.00

Item No.

61. LIFE RAFT FASTENERS (91) N/C

Purchase forty (40) stainless steel hex head bolts with hex nuts and deliver to the ship's force (Chief Officer).

Size: 8mm diameter x 40mm long with 13mm hex head

Item No.

62. STARBOARD MAIN ENGINE FUEL OIL RETURN LINE (92) $3,702.00

Furnish labor and material to remove a section of fuel oil return line for the starboard main engine in way of the port main engine exhaust gas receiver. Deliver the designated 2" x approximately 12 ft. long section of piping to the shop. Clean the section and fabricate a sleeve doubler 6"long and weld around line in way of hangers.

Pickle the line to remove all impurities and reinstall as original.

Install the steam tracer tubing and furnish and install insulation and lagging on the pipe line.

Clean up and dispose of oil drained when pipe was removed.

Labor:	88 straight time	$2,640.00
	33 premium time	594.00
Material		238.00
Subcontractor		30.00
		$3,702.00

Item No.

63. SHOP COMPUTER FOUNDATIONS

This billed in a separate invoice.

M/S NIEUW AMSTERDAM **JOB NO. 4903**

Item No.

64. NO. 1 LIFEBOAT DAVIT BRAKES $4,780.00

Furnish labor and material to transport two (2) brake shoe assemblies to shop; assemblies previously removed by crew.

Using existing shoes as a pattern, fabricate by milling and machining two (2) new brake shoes from 1-3/4" x 8" x 4" aluminum plate each. Assemble the centrifugal brake assembly and transport to the vessel. Reassemble the boat winch and prove operating correctly.

Labor:	92 straight time	$2,760.00
	92 premium time	1,656.00
Material		106.00
		$4,780.00

M/S NIEUW AMSTERDAM JOB NO. 4903

Item No.

65. LIDO DISHWASHING COUNTER $1,256.00

Furnish labor and material to furnish and install a water barrier along the athwartship aft dishwashing room counter adjacent to the hinged fore and aft counter. The barrier to be an inverted "U" shaped extrusion approximately two (2) ft. long x 1" high and 1/2" wide at the base. Weld to the counter top and polish weld and counter top upon completion.

Labor:	24 straight time	$720.00
	24 premium time	432.00
Material		36.00
		$1,256.00

Item No.

66. PORT BOILER $609.00

Furnish labor and material to assist the ship's electrician in trouble shooting the port boiler operation. Remove and test external sensors and electronic control modules. Bypass the shut down circuits to determine cause of malfunctions.

Note: Substitute fuel appears to be the problem.

Labor:	12 straight time	$360.00
	12 premium time	216.00
		$609.00

M/S NIEUW AMSTERDAM JOB NO. 4903

Item No.

67 UNDERLAYMENT FOR CARPET $35,912.00

Furnish labor and material to repair the underlayment in way of all carpet renewal areas throughout the vessel.

Subcontractor $35,912.00

NORTHWEST MARINE IRON WORKS

SHIP REPAIRERS
GENERAL MACHINE WORK
ENGINEERING

MAIL PAYMENT TO:
P.O. BOX 4000-58
PORTLAND, OREGON 97208

INVOICE

M/V "NIEUW AMSTERDAM" and Owners
c/o Holland America Line
300 Elliott Avenue West
Seattle, WA 98119

DATE	June 29, 1989
OUR JOB NO.	4903
CUSTOMER'S ORDER NO.	
CONTRACT NO.	
INVOICE NO.	4903-4
TERMS	Net upon Receipt

CUSTOMER CODE NUMBER:

Duns No. 00-902-8580

M/V "NIEUW AMSTERDAM"

For furnishing labor, and material to accomplish repairs in accordance with attached specifications.

Total Amount Due This Invoice $ 178,828.00

APPROVED:

J.L. ADRIAANSE
Vice President - Technical

Date: _____

PAST DUE PAYMENTS SHALL BEAR INTEREST AT THE HIGHEST LAWFUL RATE UNTIL REPAID, NOT TO EXCEED 1½% PER MONTH.

CORRESPONDENCE ADDRESS P.O. BOX 3109 PORTLAND, OREGON 97208 PHONE (503) 285-7557

Item No.
1 COMPUTER CABLE (30) $175,466.00

Furnish labor and material to remove necessary overhead and wall panels to install approximately nine thousand seven hundred sixty-three (9,763) feet of 8-conductor cable. Provide and install a total of approximately nine hundred fifty-two (952) feet of 110 volt electrical cable and necessary receptacles.

New computer cable is to be connected to new computer by Owner-furnished Representative. Provide and install all necessary MCTs for penetrations through water tight bulkheads and decks.

Route the cables to the following locations.

CABLE ROUTING

Shore Excursion Office

Terminals located under counter and on desk. Thirty (30) feet of cable estimated inside office to storage locker in office at frame 165. Cables to run down through MCT in locker to beauty parlor on main deck and into computer room approximately forty (40) feet. Inside computer room would take twenty (20 ft.) to reach all areas. This is ninety (90) feet total for each run and four (4) each cables are requested, a total three hundred sixty (360) feet.

Henry's Bar

Terminal location, aft end of back bar frame 139. Cable runs under counter fwd to frame 147 Linde, 115 volt outlet, and into pantry under sink. This is approximately twenty (20) feet, run cable up to overhead under stainless conduit. Inside overhead run fwd to piping change about frame 155 and fwd to shore excursion office locker and down to MCT, into the beauty parlor. This is one hundred ten (110) feet plus twenty (20) feet inside computer room. A total of one hundred fifty (150) feet for each run and two (2) each cables requested, total three hundred (300) feet.

Photo Lab

Terminal location not known. Estimate twenty (20) feet of cable in lab area. Cable runs out to passage way at frame 53 on boat deck and fun fwd to pipe locker at frame 113 (Stateroom 134), then down to upper Prom Deck passage and forward to elevator at frame 171. Enter shaft through MCT or pipe and down shaft to main deck. Exit shaft through MCT to barber shop, run aft through beauty parlor to frame 163 and into computer room. Total cable length is four hundred and fifty (450) feet.

Deck Department

Terminal location aft bulkhead requires eighteen (18) feet of cable in space. Cable run through overhead at frame 184 of Nav Deck into passage way. Run aft in overhead through MCT at frame 176 and aft to frame 173. Enter elevator shaft through MCT and down to main deck. Run out through MCT into barber shop, aft through beauty shop and into computer room. Total cable length is two hundred (200) feet.

(continued)

Item No.
1 COMPUTER CABLE (30) (CONTINUED)

Captain Cabin
Terminal location not known. Estimate twenty (20) feet of cable in cabin. Run from overhead at frame 190 and into passage way. Cable route same as deck office. Total cable length two hundred twenty (220) feet.

Chief Engineer
Exact terminal location not known. Estimate twenty (20 ft.) of cable in office. Run from overhead at frame 181 and into passage way. Cable route same as deck office. Total cable length one hundred ninety-five (195) feet.

Cruise Director
Estimate sixteen (16) feet cable inside office. Run out to stbd passageway at frame 177 main deck and aft through fire barrier frame one hundred seventy-six (176) through pipe, continue aft to frame 163 and into computer room. Total cable length eighty (80) feet.

Maitre d'
Estimate sixteen (16) feet cable in office. Run out to passage at frame 165, down passage to frame 163 and into computer room; total cable length fifty (50) feet.

Purser
Estimate sixteen (16) feet cable in office. Run fwd to computer room in overhead to frame 163; total cable length thirty-five (35) feet.

Front Office
Terminals located under counter, one (1) port and one (1) stbd. Run cable under counter to port bulkhead and up to overhead of housekeeper office. Run fwd through food and beverage office into beauty parlor to frame 163 then into computer room. Cable length for stbd terminals is one hundred fifteen (115) feet and port terminals is one hundred five (105) feet. Total cables two hundred twenty (220) feet.

Food and Beverage Office
Terminal location not known. Estimate sixteen (16) feet cable in office, run in overhead fwd to beauty parlor frame to 163 and into computer room. Total cable seventy-five (75) feet.

Housekeeper
Terminal location not known. Estimate sixteen (16) feet cable in office, run in overhead fwd through food and beverage office and beauty parlor to frame 163 then into computer room. Total cable ninety (90) feet.

(continued)

Item No.
1 COMPUTER CABLE (30) (CONTINUED)

Beverage Manager
Terminal location not known. Estimate sixteen (16) feet cable in office. Cable run in overhead fwd through entrance, over gents head, over hotel manager's office, over entrance at frame 147 and into store room M-7. Run to port and frame 151 into locker to stbd passage. Run fwd down passage through MCT at fire boundary frame 152 up to frame 163 and into computer room. Total cable one hundred forty-five (145) feet.

Hotel Manager
Terminal location not known. Estimate twenty-four (24) feet cable in office. Run cable in overhead and use same route as beverage manager. Total cable is one hundred fifteen (115) feet.

Dining Room
Terminal location on fwd counter stbd side estimate eight (8) feet cable in dining room. Run cable through pipe in fire boundary frame 127 into service stairwell then down to "A" deck. Continue through pipe at fire boundary to stbd passage. Run fwd in overhead to frame 151 then up through pipe into locker on main deck to overhead. Run to stbd passage through MCT at frame 152 then fwd to frame 163 and into computer room. Total cable one hundred forty-five (145) feet.

Crew Bar
Terminal location not known. Estimate twenty (20) feet inside bar area. Run cable fwd to frame 14 and follow same route as P. O. Bar. Total cable five hundred twenty (520) feet.

Provision Office
Terminal location not known, estimate sixteen (16) feet inside office. Run cable aft through fire boundary in pipe at frame 23 then to MCT as same frame to center passage way. Follow same route fwd as P. O. Bar. Total cable five hundred (500) feet.

Engine Room Office
Terminal location not known. Estimate eight (8) feet inside office. Run cable down through pipe into engine room "B" deck level. Follow cableway on aft bulkhead to port side. Run same route fwd as P. O. Bar. Total cable four hundred eighty (480) feet.

Wine Room
Terminal location not known. Estimate twenty (20) feet inside room. Run cable down through pipe into engine room and to cable run centerline of engine room. Run aft and down bulkhead to "B" deck level. Follow same route as P. O. Bar. Total cable four hundred ninety (490) feet.

Executive Chef
Terminal location inboard bulkhead. Estimate eight (8) feet inside office. Run cable down to engine room through pipe and follow same route for wine room and P. O. Bar. Total cable four hundred ninety (490) feet.

(continued)

Item No. 1

COMPUTER CABLE (30) (CONTINUED)

Controller

As this is located in the computer room, estimate twenty (20) feet per run. There are two (2) runs required for a total of forty (40) feet.

Total of cable lengths quoted in each section are approximately and do not reflect unforeseen obstacles to go around.

OVERHEAD REMOVALS

The following overhead does not include overhead removed for piping.

Navigation Deck

Passage from frame 171 to frame 195. Some overhead in deck office, hotel manager, captain, chief officer, chief engineer and radio office to terminal locations.

Boat Deck

Removals in photo lab and print shop to terminals.

Promenade Deck

Approximately from frame 155 in Henry's Bar to pantry and inside pantry. Also in excursion office.

Main Deck

Stbd passage frame 180 to frame 150. Some overhead in cruise director, Maitre d', purser, barber shop, beauty parlor, food and beverage office, housekeeper and computer room. Also overhead in locker frame 150 stbd, M-7 storeroom, stbd entrance fwd, gents room, hotel manager, stbd entrance aft and beverage manager office.

Frame 15 overhead in P. O. Bar to stbd bulkhead and crew bar fwd to terminal.

"A" Deck

Stbd passage frame 174 to frame 162 inside stateroom No. 457. This is for 125 amp cable to computer room. Stbd passage frame 152 aft to frame 127.

"B" Deck

Port passage frame 116 aft to frame 58 center passage frame 47 aft to frame 23 sally port from provision office to carpenter shop port passage frame 172 aft to frame 169.

Joiner Work

Some joiner work in each room may be required for cable runs down to terminals.

(continued)

Item No.
1 COMPUTER CABLE (30) (CONTINUED)

115 VOLT POWER (TSGU-4)

Dining Room	250 feet
BSM	85 feet
Hotel Manager	125 feet
PSM	92 feet
Cruise Director	70 feet
Storekeeper	100 feet
Maitre d'	30 feet
Extensions for Rooms/110 V Avail	200 feet
Total	952 feet

115 volt power from sub-station 4 to computer room 125 amp (TSGU-25) 85 feet

Power panel with two (2) each 50 amp breakers and TSGU-23 to each main frame.

MCT FRAMES

Navigation Frames	Two (2) each	7 Cables	8 Cond	RGS-2
4 Promenade	Two (2) each	8 Cables	8 Cond	RGS-2
Main Deck	One (1) each	21 Cables	8 Cond	RGS-2
"B" Deck	Two (2) each	7 Cables	8 Cond	RGS-2
	Three (3) each	6 Cables	8 Cond	RGS-2
	Two (2) each	3 Cables	8 Cond	RGS-2
	Twelve (12) each	(11 each RGS-2/1 each RGS-4)		

When complete reinstall all removed overhead and wall panels.

Labor:	4,243 straight time	$127,290.00
	1,733 premium time	31,194.00
Material		7,520.00
		$175,466.00

M/V "NIEUW AMSTERDAM" and Owners
c/o Holland America Line
300 Elliott Avenue West
Seattle, WA 98119

Job Number 4903

Item No. 2 SHOP COMPUTER FOUNDATIONS $3,362.00

Furnish labor and material to fabricate and install stainless steel foundation platforms for four (4) computer terminals and four (4) keyboards in the counters of three (3) shops on the Promenade Deck. The foundations are approximately 19-1/2" long x 18" wide x 5" high in accordance with attached Sketch.

Remove front edge on recessed countertops and face with strip of formica as original.

The location and number of foundation arrangements are as follows:

One (1) in the Jewelry Shop
One (1) in the Boutique
Two (2) in the Gift Shop

Labor:	65 straight time hours	$1,960.00
	62 premium time hours	1,116.00
Material:		115.00
		$3,362.00

NORTHWEST MARINE IRON WORKS

MAILING ADDRESS: P.O. BOX 3109
PORTLAND, OR 97208

5555 N. CHANNEL AVE., BLDG. 2
PORTLAND, OREGON 97217

PHONE: (503) 285-7557

TWX: 910-464-6107 NORMARINE PTL

June 29, 1989

Holland America Line
300 Elliott Avenue West
Seattle, WA 98119

Attention: Mr. J. L. Adriaanse
Vice President - Technical Department

RE: M/V "NIEUW AMSTERDAM"
Invoices 4903-3 Thru 4903-7
and 4900-2

Gentlemen:

Please find enclosed our Invoice Numbers 4903-3 thru 4903-7 and 4900-2 to cover labor, material and services in accomplishing the work on the above vessel in accordance with your specifications.

We wish to thank you for your kind consideration.

Sincerely,

Nicholas G. Calley
Director of Sales

NORTHWEST MARINE IRON WORKS

SHIP REPAIRERS
GENERAL MACHINE WORK
ENGINEERING

INVOICE

MAIL PAYMENT TO:
P.O. BOX 4000-58
PORTLAND, OREGON 97208

M/V "NIEUW AMSTERDAM" and Owners
c/o Holland America Line
300 Elliott Avenue West
Seattle, WA 98119

DATE	June 21, 1989
OUR JOB NO.	4903
CUSTOMER'S ORDER NO.	
CONTRACT NO.	
INVOICE NO.	4903-3
TERMS	Net upon Receipt

CUSTOMER CODE NUMBER:

Duns No. 00-902-8580

M/V "NIEUW AMSTERDAM"
PRO FORMA

For furnishing labor, and material to accomplish repairs in accordance with the attached specifications.

Total Amount Due This Invoice $ 3,536.00

APPROVED:

J. L. ADRIAANSE
Vice President - Technical

Date: _____

PAST DUE PAYMENTS SHALL BEAR INTEREST AT THE HIGHEST LAWFUL RATE UNTIL REPAID, NOT TO EXCEED 1½% PER MONTH.

CORRESPONDENCE ADDRESS P.O. BOX 3109 PORTLAND, OREGON 97208 PHONE (503) 285-7557

NWMAR127845

NORTHWEST MARINE IRON WORKS

SHIP REPAIRERS
GENERAL MACHINE WORK
ENGINEERING

MAIL PAYMENT TO:
P.O. BOX 4000-58
PORTLAND, OREGON 97208

INVOICE

M/V "NIEUW AMSTERDAM" and Owners
c/o Holland America Line
300 Elliott Avenue West
Seattle, WA 98119

DATE	June 21, 1989
OUR JOB NO.	4903
CUSTOMER'S ORDER NO.	
CONTRACT NO.	
INVOICE NO.	4903-4
TERMS	Net upon Receipt

CUSTOMER CODE NUMBER:

Duns No. 00-902-8580

M/V "NIEUW AMSTERDAM"
PRO FORMA

For furnishing labor, and material to accomplish repairs in accordance with the attached specifications.

Total Amount Due This Invoice $178,828.00

APPROVED:

J. L. ADRIAANSE
Vice President - Technical

Date: _____

PAST DUE PAYMENTS SHALL BEAR INTEREST AT THE HIGHEST LAWFUL RATE UNTIL REPAID, NOT TO EXCEED 1½% PER MONTH.

CORRESPONDENCE ADDRESS P.O. BOX 3109 PORTLAND, OREGON 97208 PHONE (503) 285-7557

NORTHWEST MARINE IRON WORKS

SHIP REPAIRERS
GENERAL MACHINE WORK
ENGINEERING

INVOICE

MAIL PAYMENT TO:
P.O. BOX 4000-58
PORTLAND, OREGON 97208

M/V "NIEUW AMSTERDAM" and Owners
c/o Holland America Line
300 Elliott Avenue West
Seattle, WA 98119

DATE	June 21, 1989
OUR JOB NO	4906
CUSTOMER'S ORDER NO.	
CONTRACT NO	
INVOICE NO	4903-5
TERMS	Net upon Receipt

CUSTOMER CODE NUMBER:

Duns No 00-902-8580

M/V "NIEUW AMSTERDAM"
PRO FORMA

For furnishing labor, and material to accomplish repairs in accordance with the attached specifications.

Total Amount Due This Invoice $ 56,946.00

APPROVED:

J. L. ADRIAANSE
Vice President - Technical

Date: _____

PAST DUE PAYMENTS SHALL BEAR INTEREST AT THE HIGHEST LAWFUL RATE UNTIL REPAID, NOT TO EXCEED 1½% PER MONTH.

CORRESPONDENCE ADDRESS P.O. BOX 3109 PORTLAND, OREGON 97208 PHONE (503) 285-7557

NORTHWEST MARINE IRON WORKS

SHIP REPAIRERS
GENERAL MACHINE WORK
ENGINEERING

INVOICE

MAIL PAYMENT TO:
P.O. BOX 4000-58
PORTLAND, OREGON 97208

M/V "NIEUW AMSTERDAM" and Owners
c/o Holland America Line
300 Elliott Avenue West
Seattle, WA 98119

DATE	June 21, 1989
OUR JOB NO.	4903
CUSTOMER'S ORDER NO.	
CONTRACT NO.	
INVOICE NO.	4903-6
TERMS	Net upon Receipt

CUSTOMER CODE NUMBER:

Duns No. 00-902-8580

M/V "NIEUW AMSTERDAM"
PRO FORMA

For furnishing labor, and material to accomplish repairs in accordance with the attached specifications.

Total Amount Due This Invoice $349,445.00

APPROVED:

J. L. ADRIAANSE
Vice President - Technical

Date: _____

PAST DUE PAYMENTS SHALL BEAR INTEREST AT THE HIGHEST LAWFUL RATE UNTIL REPAID, NOT TO EXCEED 1½% PER MONTH.

CORRESPONDENCE ADDRESS P.O. BOX 3109 PORTLAND, OREGON 97208 PHONE (503) 285-7557

NWMAR127848

NORTHWEST MARINE IRON WORKS

SHIP REPAIRERS
GENERAL MACHINE WORK
ENGINEERING

MAIL PAYMENT TO:
P.O. BOX 4000-58
PORTLAND, OREGON 97208

INVOICE

M/V "NIEUW AMSTERDAM" and Owners
c/o Holland America Line
300 Elliott Avenue West
Seattle, WA 98119

DATE	June 21, 1989
OUR JOB NO.	4903
CUSTOMER'S ORDER NO.	
CONTRACT NO.	
INVOICE NO.	4903-7
TERMS	Net upon Receipt

CUSTOMER CODE NUMBER:

Duns No. 00-902-8580

M/V "NIEUW AMSTERDAM"
PRO FORMA

For furnishing labor, and material to accomplish repairs in accordance with the attached specifications.

Total Amount Due This Invoice $119,278.00

APPROVED:

J. L. ADRIAANSE
Vice President - Technical

Date: _____

PAST DUE PAYMENTS SHALL BEAR INTEREST AT THE HIGHEST LAWFUL RATE UNTIL REPAID, NOT TO EXCEED 1½% PER MONTH.

CORRESPONDENCE ADDRESS P.O. BOX 3109 PORTLAND, OREGON 97208 PHONE (503) 285-7557

NORTHWEST MARINE IRON WORKS

SHIP REPAIRERS
GENERAL MACHINE WORK
ENGINEERING

INVOICE

MAIL PAYMENT TO:
P.O. BOX 4000-58
PORTLAND, OREGON 97208

M/V "NIEUW AMSTERDAM" and Owners
c/o Holland America Line
300 Elliott Avenue West
Seattle, WA 98119

DATE	June 21, 1989
OUR JOB NO.	4903
CUSTOMER'S ORDER NO.	
CONTRACT NO.	
INVOICE NO.	4903-8
TERMS	Net upon Receipt

CUSTOMER CODE NUMBER:

Duns No. 00-902-8580

M/V "NIEUW AMSTERDAM"
PRO FORMA

For furnishing labor, and material to accomplish repairs in accordance with the attached specifications.

Total Amount Due This Invoice $541,103.00

APPROVED:

J. L. ADRIAANSE
Vice President - Technical

Date: _____

PAST DUE PAYMENTS SHALL BEAR INTEREST AT THE HIGHEST LAWFUL RATE UNTIL REPAID, NOT TO EXCEED 1½% PER MONTH.

CORRESPONDENCE ADDRESS P.O. BOX 3109 PORTLAND, OREGON 97208 PHONE (503) 285-7557

NORTHWEST MARINE IRON WORKS

MAILING ADDRESS: P.O. BOX 3109
PORTLAND, OR 97208

5555 N. CHANNEL AVE., BLDG. 2
PORTLAND, OREGON 97217

PHONE: (503) 285-7557

TWX: 910-464-6107 NORMARINE PTL

June 21, 1989

Holland America Line
300 Elliott Avenue West
Seattle, WA 98119

Attention: Mr. J. L. Adriaanse
Vice President - Technical Department

RE: M/V "NIEUW AMSTERDAM"
Invoice 4903-2

Gentlemen:

Please find enclosed our Progress Billing Invoice Number 4903-2 to cover work accomplished to date in completing the attached specifications.

We wish to thank you for your kind consideration.

Sincerely,

Nicholas G. Calley
Director of Sales

NORTHWEST MARINE IRON WORKS

SHIP REPAIRERS
GENERAL MACHINE WORK
ENGINEERING

MAIL PAYMENT TO:
P.O. BOX 4000-58
PORTLAND, OREGON 97208

INVOICE

M/V "NIEUW AMSTERDAM" and Owners
c/o Holland America Line
300 Elliott Avenue West
Seattle, WA 98119

DATE	June 21, 1989
OUR JOB NO.	4903
CUSTOMER'S ORDER NO.	
CONTRACT NO.	
INVOICE NO.	4903-2
TERMS	Net upon Receipt

CUSTOMER CODE NUMBER:

Duns No. 00-902-8580

M/V "NIEUW AMSTERDAM"
PROGRESS BILLING NO. 2

For furnishing labor, and material to accomplish repairs in progress.

Total Amount Due This Invoice $500,000.00

APPROVED:

J. L. ADRIAANSE
Vice President - Technical

Date: _____

PAST DUE PAYMENTS SHALL BEAR INTEREST AT THE HIGHEST LAWFUL RATE UNTIL REPAID, NOT TO EXCEED 1½% PER MONTH.

CORRESPONDENCE ADDRESS P.O. BOX 3109 PORTLAND, OREGON 97208 PHONE (503) 285-7557

NORTHWEST MARINE IRON WORKS

MAILING ADDRESS: P.O. BOX 3109
PORTLAND, OR 97208

5555 N. CHANNEL AVE., BLDG. 2
PORTLAND, OREGON 97217

PHONE: (503) 285-7557

TWX: 910-464-6107 NORMARINE PTL

May 22, 1989

M/V "NIEUW AMSTERDAM" and Owners
c/o Holland America Line
300 Elliott Avenue West
Seattle, Washington 98119

Attention: Mr. J. L. Adriaanse
Vice President - Technical

Gentlemen:

Enclosed please find our Progress Billing No. 1 for furnishing labor and material on repairs in progress on the NIEUW AMSTERDAM.

We thank you for the opportunity of doing business with you and look forward to future opportunities.

Sincerely,

Nicholas G. Calley
Director of Sales

NORTHWEST MARINE IRON WORKS

SHIP REPAIRERS
GENERAL MACHINE WORK
ENGINEERING

MAIL PAYMENT TO:
P.O. BOX 4000-58
PORTLAND, OREGON 97208

INVOICE

M/V "NIEUW AMSTERDAM" and Owners
c/o Holland America Line
300 Elliott Avenue West
Seattle, WA 98119

DATE	May 22, 1989
OUR JOB NO.	4903
CUSTOMER'S ORDER NO.	
CONTRACT NO.	
INVOICE NO.	4903-1
TERMS	Net upon receipt

CUSTOMER CODE NUMBER: 07203

Duns No. 00-902-8580

M.V. "NIEUW AMSTERDAM"
PROGRESS BILLING NO. 1

For furnishing labor, and material to accomplish repairs in progress.

Total Amount Due This Invoice $500,000.00

APPROVED:

J. L. ADRIAANSE
Vice President - Technical

Date: MAY 22 1989

PAST DUE PAYMENTS SHALL BEAR INTEREST AT THE HIGHEST LAWFUL RATE UNTIL REPAID, NOT TO EXCEED 1½% PER MONTH.

CORRESPONDENCE ADDRESS P.O. BOX 3109 PORTLAND, OREGON 97208 PHONE (503) 285-7557

NWMAR127854

NORTHWEST MARINE IRON WORKS

MAILING ADDRESS: P.O. BOX 3109
PORTLAND, OR 97208

5555 N. CHANNEL AVE., BLDG. 2
PORTLAND, OREGON 97217

PHONE: (503) 285-7557

TWX: 910-464-6107 NORMARINE PTL

DATE: May 16, 1989

TO: All Crafts
Purchasing Department
Payroll Department
Accounting Department
Document Control

FROM: Lynn Mills

SUBJECT: M/V "Nieuw Amsterdam"

Effective at noon on Wednesday May 17, 1989 Job #4900 for the "Nieuw Amsterdam" will be closed. After that hour all time and material charges shall be to Job #4903. The item numbers will be the same as Job #4900. All time charges for setting up of the berth prior to arrival will be charged to Job #4903.

In addition, effective immediately there shall be a separate time sheet for the "Nieuw Amsterdam" turned in daily. Any questions regarding time sheets shall be referred to me.

cc: B. Zavin
G. Miller
J. Coleman
N. Calley
A. Dunk
D. Sheridan
J. Gilmore
J. O'Rourke

LANE-MILES STANDISH CO.

Job Order
NORTHWEST MARINE IRON WORKS

JOB NO. #4903

BILL TO: Holland America Lines
300 Elliott Avenue West
Seattle, Washington 98119

Estimated Completion Date: 5/30/89

Customer's No.

☐ Fixed Price ☒ Time Material

☐ Parts ☐ Acknowledge

Terms: F.O.B.

Ship To:

Quoted Price

Supt. or Foreman in Charge

Line	Part No.	Qty.	Description of Work	Symbol	M.I./RFP
			M/V "Nieuw Amsterdam" Wet berth repairs. Start: 5/17/89 Complete: 5/30/89 Location: B-304 Project Manager: Nick Calley Ship Supt: Dave Sheridan		

	Est. Hrs.	Actual Hrs. Strt.	Actual Hrs. O.T.
30. Mach.			
31. Truck			
32. Carp.			
33. Labor.			
34. Paint.			
35. BM.			
38. Assy.			
40. Eng.			
Patt.			
TOTAL			

Date of Order | Comp. Date | By

☐ ☐ PATT. ☐ OTHER

COST DATA

LABOR S.T. HRS.

LABOR O.T. HRS.

P.O.'s .....

STORES .....

MILEAGE .....

EXPENSE .....

OVERHEAD .....

TOTAL .....

BILLING DATA

HRS. ●

O.T. HRS. ●

MATERIALS

%

EXPENSE

TOTAL

NWMAR127856

AMENDMENT OF SOLICITATION/MODIFICATION OF CONTRACT

1. CONTRACT ID CODE: D0-A3

PAGE 1 OF PAGES 4

2. AMENDMENT/MODIFICATION NO.: 0027

3. EFFECTIVE DATE: 21 MAY 1992

4. REQUISITION/PURCHASE REQ. NO.: 24-92-85955136

5. PROJECT NO. (If applicable): USCGC POLAR SEA

6. ISSUED BY — CODE

COMMANDER (vp1)
MAINTENANCE AND LOGISTICS COMMAND PACIFIC
COAST GUARD ISLAND, BLDG. 50-7
ALAMEDA, CA 94501-5100

7. ADMINISTERED BY (If other than Item 6) — CODE

8. NAME AND ADDRESS OF CONTRACTOR (No., street, county, State and ZIP Code)

NORTHWEST MARINE, INC.
5555 N. CHANNEL AVE., BLDG. 2
PORTLAND, OR 97802 (503)285-7557

CODE — FACILITY CODE

(✓) 9A. AMENDMENT OF SOLICITATION NO.

9B. DATED (SEE ITEM 11)

X 10A. MODIFICATION OF CONTRACT/ORDER NO.: DTCG85-89-C-55136

10B. DATED (SEE ITEM 13): 11 APR 89

11. THIS ITEM ONLY APPLIES TO AMENDMENTS OF SOLICITATIONS

☐ The above numbered solicitation is amended as set forth in Item 14. The hour and date specified for receipt of Offers ☐ is extended, ☐ is not extended.

Offers must acknowledge receipt of this amendment prior to the hour and date specified in the solicitation or as amended, by one of the following methods: (a) By completing Items 8 and 15, and returning _____ copies of the amendment; (b) By acknowledging receipt of this amendment on each copy of the offer submitted; or (c) By separate letter or telegram which includes a reference to the solicitation and amendment numbers. FAILURE OF YOUR ACKNOWLEDGMENT TO BE RECEIVED AT THE PLACE DESIGNATED FOR THE RECEIPT OF OFFERS PRIOR TO THE HOUR AND DATE SPECIFIED MAY RESULT IN REJECTION OF YOUR OFFER. If by virtue of this amendment you desire to change an offer already submitted, such change may be made by telegram or letter, provided each telegram or letter makes reference to the solicitation and this amendment, and is received prior to the opening hour and date specified.

12. ACCOUNTING AND APPROPRIATION DATA (If required)

40 C 1 0 33 45 10 20 14502 2552 INCREASED $140,000 NEW TOTAL $2,684,218.00

13. THIS ITEM APPLIES ONLY TO MODIFICATIONS OF CONTRACTS/ORDERS, IT MODIFIES THE CONTRACT/ORDER NO. AS DESCRIBED IN ITEM 14.

(✓) A. THIS CHANGE ORDER IS ISSUED PURSUANT TO: (Specify authority) THE CHANGES SET FORTH IN ITEM 14 ARE MADE IN THE CONTRACT ORDER NO. IN ITEM 10A.

B. THE ABOVE NUMBERED CONTRACT/ORDER IS MODIFIED TO REFLECT THE ADMINISTRATIVE CHANGES (such as changes in paying office, appropriation date, etc.) SET FORTH IN ITEM 14, PURSUANT TO THE AUTHORITY OF FAR 43.103(b).

C. THIS SUPPLEMENTAL AGREEMENT IS ENTERED INTO PURSUANT TO AUTHORITY OF:

BILATERAL AGREEMENT

D. OTHER (Specify type of modification and authority)

IMPORTANT: Contractor ☒ is not, ☐ is required to sign this document and return _____ copies to the issuing office.

14. DESCRIPTION OF AMENDMENT/MODIFICATION (Organized by UCF section headings, including solicitation/contract subject matter where feasible.)

SEE ATTACHED.

Except as provided herein, all terms and conditions of the document referenced in Item 9A or 10A, as heretofore changed, remains unchanged and in full force and effect.

15A. NAME AND TITLE OF SIGNER (Type or print): William K. Dunbar, Contract Manager, Northwest Marine

16A. NAME AND TITLE OF CONTRACTING OFFICER (Type or print): JOHN C. PORTER

15B. CONTRACTOR/OFFEROR: (Signature of person authorized to sign)

15C. DATE SIGNED: 11 June 92

16B. UNITED STATES OF AMERICA — BY: (Signature of Contracting Officer)

16C. DATE SIGNED: 6/12/92

This Supplemental Agreement and Release of Liability ("Supplemental Agreement") is entered into this 21st day of May 1992 between the United States of America (hereinafter called "the Government"), represented by the Contracting Officer of Record for this contract, and Northwest Marine, Inc., a corporation organized and existing under the laws of the State of Oregon (hereinafter called "the Contractor").

1. Northwest Marine, Inc. submitted fourteen requests for equitable adjustment for matters arising out of the dry docking and repairs to USCGC POLAR SEA performed by the Contractor under contract DTCG85-89-C-55136 The various issues raised by the Contractor are fully presented by the individual REA's.

2. The Government and the Contractor now desire to settle all issues raised by the individual requests for equitable adjustment submited under this contract. In addition, the parties also desire to establish the final value of change requests R-60, R-71, R-72, R-83, R-85, R-86, and R-89, which work was previously directed by the Contracting Officer, and for which provisional payment totaling $80,154 was made under Modification 0026.

3. Finally, the parties desire to stipulate that with the signing of this modification that there are no further matters in dispute as regards the conduct of this contract. The Contractor has submitted its Final Invoice by hand to the Contracting Officer, which invoice shall be payable thirty (30) days following execution of this agreement.

NOW, THEREFORE, in consideration of the foregoing, the parties do mutually agree as follows:

ARTICLE 1 -- INCREASE IN CONTRACT VALUE

a. The contract has been provisionally funded for a total of $80,154 under the authority of the CHANGES clause for change request items R-60, R-71, R-72, R-83, R-85, R-86, and R-89. Full payment of this amount has previously been made to the Contractor.

b. The parties agree to a settlement totaling $140,000 in addition to the current value of the contract for all issues under dispute, including final adjudication of change request items R-60, R-71, R-72, R-83, R-85, R-86, and R-89, and all issues raised by the Contractor in the fourteen REA's.

c. The amount of the contract is increased from $2,544,218 by $140,000, to a new total of $2,684,218.00.

ARTICLE II -- THE REQUEST FOR EQUITABLE ADJUSTMENT

This supplemental agreement constitutes full and final settlement for all costs associated with the Contractor's Requests for Equitable Adjustment serial numbers 5500.54, 5500.55, 5500.56,

5500.57, 5500.58, 5500.59, 5500.60, 5500.61, 5500.62, 5500.63, 5500.64, 5500.65, 5500.66, 5500.67, and 5500.69. It also represents final adjudication of change requests R-60, R-71, R-72, R-83, R-85, R-86, and R-89, as well as any and all other issues raised by the Contractor in its REA's.

ARTICLE III -- CONTRACTORS STATEMENT OF RELEASE

(1) In consideration of the modification agreed herein as complete equitable adjustment for the Contractor's proposal for equitable adjustment, the Contractor hereby releases the Government from all liability for further equitable adjustments attributable to such facts or circumstances giving rise to the proposals for equitable adjustments and final adjudication of change requests listed in Article II. In addition the Contractor hereby further releases the Government from all liability for further equitable adjustment for any and all other events occurring during the performance of contract DTCG85-89-C-55136, whether or not such events have previously been asserted orally or in writing, and whether or not specifically enumerated by the requests for equitable adjustment listed herein.

(2) The Contractor hereby confirms and acknowledges that in agreeing to the terms of this Supplemental Agreement, it has considered, made full allowance for, and is releasing all rights to any entitlement for any and all costs under, and any and all impacts upon, this Contract, whether or not such costs and impacts are known or unknown or foreseeable or unforeseeable as of the effective date of this Supplemental Agreement, whether or not such costs and impacts have been discussed with, or for any reason reserved for future discussion with the Government, or have been made the basis for other assertions of claims or request for equitable adjustment, whether or not such costs and impacts were, or are, incurred and sustained, respectively, before or after the effective date of this Supplemental Agreement, and whether or not such costs and impacts are caused directly by, indirectly by, cumulatively by, or in consequence of the impact of any event occurring during the performance of the contract.

(a) The term "costs" as used in subparagraph (2) immediately above includes, but is not limited to, any and all:

(i) direct performance ("hard core") and material cost,

(ii) subcontractor costs,

(iii) indirect cost,

(iv) local delay and local disruption costs,

(v) cumulative delay and cumulative disruption ("impact") costs,

(vi) costs associated with dislocations, accelerations, and inefficiencies in performance,

(vii) interest costs and any other consideration for financing

(viii) claim preparation costs and request for equitable adjustment preparation costs and,

(ix) overhead costs.

(3) The Contractor's release is complete and final, no rights are reserved under this Supplemental Agreement, and in any event, any and all such rights shall be deemed to have been waived without exception.

[END OF MODIFICATION]

AMENDMENT OF SOLICITATION/MODIFICATION OF CONTRACT

1. CONTRACT ID CODE

PAGE 1 OF PAGES 1

2. AMENDMENT/MODIFICATION NO.: 00001

3. EFFECTIVE DATE: 4 June 1989

4. REQUISITION/PURCHASE REQ. NO.: POLAR SEA BERTHING

5. PROJECT NO. (If applicable)

6. ISSUED BY: CODE
Commander (vpl)
Maintenance and Logistics Command Pacific
BLDG 50-7, Coast Guard Island
Alameda, CA 94501-5100

7. ADMINISTERED BY (If other than Item 6): CODE

8. NAME AND ADDRESS OF CONTRACTOR (No., street, county, State and ZIP Code)

Northwest Marine Iron Works
5555 N. Channel Ave., BLDG 2
Portland, OR 97802

CODE | FACILITY CODE

(✓) 9A. AMENDMENT OF SOLICITATION NO.

9B. DATED (SEE ITEM 11)

10A. MODIFICATION OF CONTRACT/ORDER NO.: DTCG85-89-C-55168

10B. DATED (SEE ITEM 13): 15 May 1989

11. THIS ITEM ONLY APPLIES TO AMENDMENTS OF SOLICITATIONS

☐ The above numbered solicitation is amended as set forth in Item 14. The hour and date specified for receipt of Offers ☐ is extended, ☐ is not extended.

Offers must acknowledge receipt of this amendment prior to the hour and date specified in the solicitation or as amended, by one of the following methods:

(a) By completing Items 8 and 15, and returning _____ copies of the amendment; (b) By acknowledging receipt of this amendment on each copy of the offer submitted; or (c) By separate letter or telegram which includes a reference to the solicitation and amendment numbers. FAILURE OF YOUR ACKNOWLEDGMENT TO BE RECEIVED AT THE PLACE DESIGNATED FOR THE RECEIPT OF OFFERS PRIOR TO THE HOUR AND DATE SPECIFIED MAY RESULT IN REJECTION OF YOUR OFFER. If by virtue of this amendment you desire to change an offer already submitted, such change may be made by telegram or letter, provided each telegram or letter makes reference to the solicitation and this amendment, and is received prior to the opening hour and date specified.

12. ACCOUNTING AND APPROPRIATION DATA (If required)

13. THIS ITEM APPLIES ONLY TO MODIFICATIONS OF CONTRACTS/ORDERS, IT MODIFIES THE CONTRACT/ORDER NO. AS DESCRIBED IN ITEM 14.

(✓) A. THIS CHANGE ORDER IS ISSUED PURSUANT TO: (Specify authority) THE CHANGES SET FORTH IN ITEM 14 ARE MADE IN THE CONTRACT ORDER NO. IN ITEM 10A.

B. THE ABOVE NUMBERED CONTRACT/ORDER IS MODIFIED TO REFLECT THE ADMINISTRATIVE CHANGES (such as changes in paying office, appropriation date, etc.) SET FORTH IN ITEM 14, PURSUANT TO THE AUTHORITY OF FAR 43.103(b).

C. THIS SUPPLEMENTAL AGREEMENT IS ENTERED INTO PURSUANT TO AUTHORITY OF:

D. OTHER (Specify type of modification and authority)

X Mutual Agreement

E. IMPORTANT: Contractor ☐ is not, ☒ is required to sign this document and return _____ copies to the issuing office.

14. DESCRIPTION OF AMENDMENT/MODIFICATION (Organized by UCF section headings, including solicitation/contract subject matter where feasible.)

1. The period of performance is extended three weeks, until 25 June 1989.

2. The price of the contract is increased by $30,000.00.

US COAST GUARD MLC PAC
NAVAL ENGINEERING
PROCUREMENT
1989 JUN 19 P 1:42

Except as provided herein, all terms and conditions of the document referenced in Item 9A or 10A, as heretofore changed, remains unchanged and in full force and effect.

15A. NAME AND TITLE OF SIGNER (Type or print)
Hugh T. Kingrey
Project Manager

16A. NAME AND TITLE OF CONTRACTING OFFICER (Type or print)
John C. Porter, Contracting Officer

15B. CONTRACTOR/OFFEROR: Hugh T. Kingrey (Signature of person authorized to sign)

15C. DATE SIGNED: 6/4/89

16B. UNITED STATES OF AMERICA BY: J. Porter (Signature of Contracting Officer)

16C. DATE SIGNED: 4 June 1989

NSN 7540-01-152-8070 PREVIOUS EDITION UNUSABLE

30-105

STANDARD FORM 30 (REV. 10-83) Prescribed by GSA

NWMAR127861

AWARD/CONTRACT

1. THIS CONTRACT IS A RATED ORDER UNDER DPAS (15 CFR 350)

2. CONTRACT (Proc. Inst. Ident.) NO.: DTCG85-89-C-55168

3. EFFECTIVE DATE: 14 MAY 1989

4. REQUISITION/PURCHASE REQUEST/PROJECT NO.: USCGC POLAR SEA CREW BERTHING

5. ISSUED BY — CODE
Commander(vpl)
Maintenance and Logistics Command Pacific
BLDG 50-7, Coast Guard Island
Alameda, CA 94501-5100

6. ADMINISTERED BY (If other than Item 5) — CODE

7. NAME AND ADDRESS OF CONTRACTOR (No., street, city, county, State and ZIP Code)
Northwest Marine Iron Works
5555 N. Channel Ave., BLDG 2
Portland, OR 97208

CODE | FACILITY CODE

8. DELIVERY
☐ FOB ORIGIN ☐ OTHER (See below)

9. DISCOUNT FOR PROMPT PAYMENT

10. SUBMIT INVOICES (4 copies unless otherwise specified) TO THE ADDRESS SHOWN IN: ITEM 5

11. SHIP TO/MARK FOR — CODE

12. PAYMENT WILL BE MADE BY — CODE
Commander(fac-3)
MLCPAC, Coast Guard Island
Alameda, CA 94501-5100

13. AUTHORITY FOR USING OTHER THAN FULL AND OPEN COMPETITION:
☒ 10 U.S.C. 2304(c)(1) ☐ 41 U.S.C. 253(c)( )

14. ACCOUNTING AND APPROPRIATION DATA
40 C 1 9 33.00.6T 51253 2152

15A. ITEM NO.	15B. SUPPLIES/SERVICES	15C. QUANTITY	15D. UNIT	15E. UNIT PRICE	15F. AMOUNT
0001, 0002, and 0003	Berthing Trailers for USCGC POLAR SEA				$30,000.00

15G. TOTAL AMOUNT OF CONTRACT ▶ $ 30,000.00

16. TABLE OF CONTENTS

(✓)	SEC.	DESCRIPTION	PAGE(S)	(✓)	SEC.	DESCRIPTION	PAGE(S)
		PART I — THE SCHEDULE				PART II — CONTRACT CLAUSES	
X	A	SOLICITATION/CONTRACT FORM	1	X	I	CONTRACT CLAUSES	12-13
X	B	SUPPLIES OR SERVICES AND PRICES/COSTS	2			PART III — LIST OF DOCUMENTS, EXHIBITS AND OTHER ATTACH.	
X	C	DESCRIPTION/SPECS./WORK STATEMENT	2-3		J	LIST OF ATTACHMENTS	
	D	PACKAGING AND MARKING				PART IV — REPRESENTATIONS AND INSTRUCTIONS	
X	E	INSPECTION AND ACCEPTANCE	3	X	K	REPRESENTATIONS, CERTIFICATIONS AND OTHER STATEMENTS OF OFFERORS	13-22
X	F	DELIVERIES OR PERFORMANCE	3-4				
X	G	CONTRACT ADMINISTRATION DATA	4-10	X	L	INSTRS., CONDS., AND NOTICES TO OFFERORS	23-24
X	H	SPECIAL CONTRACT REQUIREMENTS	10-12		M	EVALUATION FACTORS FOR AWARD	

CONTRACTING OFFICER WILL COMPLETE ITEM 17 OR 18 AS APPLICABLE

17. ☒ CONTRACTOR'S NEGOTIATED AGREEMENT (Contractor is required to sign this document and return 3 copies to issuing office.) Contractor agrees to furnish and deliver all items or perform all the services set forth or otherwise identified above and on any continuation sheets for the consideration stated herein. The rights and obligations of the parties to this contract shall be subject to and governed by the following documents: (a) this award/contract, (b) the solicitation, if any, and (c) such provisions, representations, certifications, and specifications, as are attached or incorporated by reference herein. (Attachments are listed herein.)

18. ☐ AWARD (Contractor is not required to sign this document.) Your offer on Solicitation Number _____, including the additions or changes made by you which additions or changes are set forth in full above, is hereby accepted as to the items listed above and on any continuation sheets. This award consummates the contract which consists of the following documents: (a) the Government's solicitation and your offer, and (b) this award/contract. No further contractual document is necessary.

19A. NAME AND TITLE OF SIGNER (Type or print)
Hugh T. Kingrey
Project Manager

20A. NAME OF CONTRACTING OFFICER
John C. Porter

19B. NAME OF CONTRACTOR
BY Hugh T. Kingrey (Signature of person authorized to sign)

19C. DATE SIGNED: 5/14/89

20B. UNITED STATES OF AMERICA
BY J. Porter (Signature of Contracting Officer)

20C. DATE SIGNED: 5/14/89

NSN 7540-01-152-8069
PREVIOUS EDITION UNUSABLE

26-107

STANDARD FORM 26 (REV. 4-85)
Prescribed by GSA
FAR (48 CFR) 53.214(a)

☆ GPO : 1985 O - 461-275 (418)

NWMAR127862

SECTION B - SUPPLIES/SERVICES AND PRICES

B.1 SUPPLIES/SERVICES AND PRICES

The Contractor shall provide, at the prices set forth below, supplies/services described in SECTION C of this contract for berthing of SRD Seattle personnel.

ITEM	DESCRIPTION	EST. QTY	UNIT	UNIT PRICE	EXTENDED TOTAL
0001	Trailer 1	3	WEEK	$5,414.00	$16,242.00
0002	Trailer 2	3	WEEKS	$1,273.00	$ 3,819.00
0003	Trailer 3	3	WEEKS	$3,313.00	$ 9,939.00
			TOTAL		$30,000.00

SECTION C - DESCRIPTION AND SPECIFICATION

C.1 BERTHING TRAILERS

1. The Contractor shall provide three berthing trailers, with parking lot facilities, at Northwest Marine Iron Works, Port of Portland Shipyard, 5555 N. Channel Ave, Portland, Oregon during the period 14 MAY 1989 until 4 JUNE 1989. Trailers shall accomodate a total of 114 persons as follows:

Trailer 1 - three 18 man bays, two 2 man rooms, head facilities to include 4 showers.

Trailer 2 - one 14 man bay, one 30 man bay, two 4 man rooms, two 2 man rooms, head facilities with seven showers.

Trailer 3 - lounge module (large central room with adjoining smaller rooms.

C.2 GENERAL REQUIREMENTS

1. All trailers shall be equipped with adequate smoke alarms, fire extinguishers, and opeational sprinkler system meeting applicable local code requirements.

2. All plumbing shall be fully operational.

3. Modules shall have adequate stairs at entrances.

4. Heating and air conditioning systems for all modules shall be operational at all times.

5. Modules shall be equipped with beds, matresses, and lockers for 114 persons, with asorted chairs and tables. The Coast Guard shall provide all linen. Lockers shall be equipped with locks

SECTION C - (Continued)

and keys sufficient for the intended use. Exterior doors shall be equipped with locks.

6. The Coast Guard shall provide a gate guard for the parking lot to ensure shipyard security. This guard shall be on duty at the gate at all times which the gate remains unlocked. The Coast Guard shall be provided 5 keys for the parking lot gate lock.

7. The Contractor shall arrange for vending machines in the lounge module, and pay phones in the berthing modules.

SECTION D - PACKAGING AND MARKING

D.1 Not applicable to this solicitation

SECTION E - INSPECTION AND ACCEPTANCE

E.1 52.252-2 CLAUSES INCORPORATED BY REFERENCE (JAN 1985)

This contract incorporates the following clauses by reference, with the same force and effect as if they were given in full text. Upon request, the Contracting Officer will make their full text available.

FEDERAL ACQUISITION REGULATIONS

52.246-2 Inspection of Supplies - Fixed Price (JUL 1985)

52.246-16 Responsibility for Supplies (JAN 1985)

E.2 THE ROLE OF GOVERNMENT PERSONNEL AND RESPONSIBILITY FOR CONTRACT ADMINISTRATION

1. Contracting Officer: The Contracting Officer retains overall responsibility for the administration of this contract. He or she alone is authorized to take actions on behalf of the Government to amend, modify or deviate from the contract terms, conditions, requirements, details and/or delivery schedules.

SECTION F - DELIVERIES OR PERFORMANCE

F.1 PLACE OF PERFORMANCE

Berthing trailers shall be provided at Northwest Marine Iron Works, 5555 N. Channel Ave, Portland, Oregon.

SECTION F - (Continued)

F.2 PERIOD OF PERFORMANCE

Performance period under this contract is between 14 MAY 1989 and 3 JUNE 1989.

SECTION G - CONTRACT ADMINISTRATION DATA

G.1 52.232-25 PROMPT PAYMENT (FEBRUARY 1988)

Notwithstanding any other payment clause in this contract the Government will make invoice payments and contract financing payments under the terms and conditions specified in this clause. Payment shall be considered as being made on the day a check is dated or an electronic funds transfer is made. Definitions of pertinent terms are set forth in 32.902. All days referred to in this clause are calendar days, unless otherwise specified.

(a) Invoice Payments

1. For purposes of this clause, "invoice payment" means a Government disbursement of monies to a Contractor under a contract of other authorization for supplies or services accepted by the Government. This includes payments for partial deliveries that have been accepted by the Government and final cost or fee payments where amounts owed have been settled between the Government and the Contractor.

(2) Except as indicated in subparagraph (a)(3) of this clause, the due date for making invoice payments by the designated payment office shall be the later of the following two events.

(i) The 30th day after the designated billing office has received a proper invoice from the Contractor.

(ii) The 30th day after Government acceptance of supplies delivered or services performed by the Contractor. On a final invoice where the payment amount is subject to contract settlement actions, acceptance shall be deemed to have occurred on the effective date of the contract settlement.

(3) Not Applicable

(4) An invoice is the Contractor's bill or written request for payment under the contract for supplies delivered or services performed. An invoice shall be prepared and submitted to the designated billing officer specified in the contract. A proper invoice must include the items listed in subdivisions (a)(4)(i) through (a)(4)(viii) of this clause. If the invoice does not

SECTION G - (Continued)

comply with these requirements, then the Contractor will be notified on the defect within 10 days after receipt of the invoice at the designated billing office. Untimely notification will be taken into account in the computation of any interest penalty owed the Contractor in the manner described in subparagraph (a)(6) of this clause.

(i) Name and address of the Contractor.

(ii) Invoice date

(iii) Contract number or other authorization for supplies delivered or services performed (including order number and contract line item number).

(iv) Description, quantity, unit of measure, unit price, and extended price of supplies delivered or services performed.

(v) Shipping and payment terms (e.g. shipment number and date of shipment, prompt payment discount terms). Bill of lading number and weight of shipment will be shown for shipment's on Government bills of lading.

(vi) Name and address of Contractor official to whom payment is to be sent (must be the same as that in the contract or in a proper notice of assignment).

(vii) Name (where practicable),title, phone number and mailing address of person to be notified in event of a defective invoice.

(viii) Any other information or documentation required by other requirements of the contract (such as evidence of shipment).

(5) An interest penalty shall be paid automatically by the Government, without request from the Contractor, if payment is not make within 15 days and the following conditions are met, if applicable:

(i) A proper invoice was received by the designated billing office.

(ii) A receiving report or other Government documentation authorizing payment was processed and there was no disagreement over quantity, quality, or contractor compliance with any contract term or condition.

SECTION G - (Continued)

(iii) In the case of a final invoice for any balance of funds due the Contractor for supplies delivered or services performed, the amount was not subject to further contract settlement actions between the Government and the Contractor.

(6) The interest penalty shall be the rate established by the Secretary of the Treasury under Section 12 of the Contract Disputes Act of 1978 (41 U.S.C. 611) that is in effect on the payment date, except where the interest penalty is prescribed by other governmental authority. This rate is referred to as the "Renegotiation Board Interest Rate," and it is published in the Federal Register semiannually on or about January 1 and July 1. The interest penalty shall accrue daily on the invoice payment amount approved by the Government and be compounded in 30- day increments inclusive from the first day after the due date through the payment date. That is, interest accrued at the end of any 30-day period will be added to the approved invoice payment amount and be subject to interest penalties if not paid in the succeeding 30-day period. If the designated billing office failed to notify the contractor of a defective invoice within the period prescribed in paragraph (a)(4) of this clause, then the due date on the corrected invoice will be adjusted by subtracting the number of days taken beyond the prescribed notification of defects period. Any interest penalty owed the Contractor will be based on this adjusted due date. Adjustments will be made by the designated payment office for errors in calculating interest penalties, if request by the Contractor.

(i) For the sole purpose of computing an interest penalty that might be due the Contractor, Government acceptance shall be deemed to have occurred constructively on the 5th working day after the Contractor delivered the supplies or performed the services in accordance with the terms and conditions of the contract, unless there is a disagreement over quantity, quality, or contractor compliance with a contract provision. In the event that actual acceptance occurs within the constructive acceptance period, the determination of an interest penalty shall be based on the actual date of acceptance. The constructive acceptance requirement does not, however, compel Government officials to accept supplies or services, perform contract administration functions, or make payment prior to fulfilling their responsibilities.

(ii) The following periods of time will not be included in the determination of an interest penalty:

(A) The period taken to notify the Contractor of defects in invoices submitted to the Government, but this may not exceed 10 days.

SECTION G - (Continued)

(B) The period between the defects notice and resubmission of the corrected invoice by the Contractor.

(iii) Interest penalties will not continue to accrue after the filing of a claim for such penalties under the Disputes clause or for more than 1 year. Interest penalties of less than $1.00 need not be paid.

(iv) Interest penalties are not required on payment delays due to disagreement between the Government and Contractor over the payment amount or on amounts temporarily withheld or retained in accordance with the terms of the contract. Claims involving disputes, and any interest that may be resolved in accordance with the Disputes clause.

(7) An interest penalty shall also be paid automatically by the designated payment office, without request from the contractor, if an improperly taken discount for prompt payment was not corrected within 15 days after the expiration of the discount period. The interest penalty will be calculated as described in paragraph (a)(6) of this clause on the amount of discount taken for the period beginning with the first day after the end of the discount period through the date when the contractor is paid.

(b) Contract Financing Payments

(1) For purposes of this clause, "contract financing payment" means a Government disbursement of monies to a Contractor under a contract clause or other authorization prior to acceptance of supplies or services by the Government. Contract financing payments include advance payments, progress payments based on cost under the clause at 52.232-16, Progress Payments, progress payments based on a percentage or stage of completion (32.102(e)(1)) other than those made under the clause at 52.232-5. Payments Under Fixed -Price Construction Contracts, or the clause at 52.232-10, Payments Under Fixed-Price Architect-Engineer Contracts, and interim payments on cost type contracts.

(2) For contracts that provide for contract financing, requests for payment shall be submitted to the designated billing office as specified in this contract or as directed by the Contracting Officer. Contract financing payments shall be made on the 30th day after receipt of a proper contract financing request by the designated billing office. In the event that an audit or other review of a specific financing request is required to ensure compliance with the terms and conditions of the contract, the designated payment office is not compelled to make payment by the due date specified.

SECTION G - (Continued)

(3) For advance payments, loans, or other arrangements that do no involve recurrent submissions of contract financing requests, payment shall be made in accordance with the corresponding contract terms or as directed by the Contracting Officer.

(4) Contract financing payments shall not be assessed on interest penalty for payment delays.

(c) Electronic Funds Transfer

Payments under this contract will be made by the Government either by check or electronic funds transfer (through the Treasury Financial Communications System (TFCS) or the Automated Clearing House (ACH), at the option of the Government. After award, but no later than 14 days before an invoice or contract financing request is submitted, the contractor shall designate a financial institution for receipt of electronic funds transfer payments. The Contractor shall submit this designation to the Contracting Officer or other Government official, as directed.

(1) For payment through TFCS, the Contractor shall provide the following information:

(i) Name, address, and telegraphic abbreviation of the financial institution receiving payment.

(ii) The American Bankers Association 9-digit identifying number of the financing institution receiving payment if the institution has access to the Federal Reserve Communications System.

(iii) Payee's account number at the financial institution where funds are to be transferred.

(iv) If the financial institution does not have access to the Federal Reserve Communications System, name, address, and telegraphic abbreviation of the correspondent financial institution through which the financial institution receiving payment obtains electronic funds transfer messages. Provide the telegraphic abbreviation and American Bankers Association identifying number for the correspondent institution.

(2) For payment through ACH, the Contractor shall provide the following information:

(i) Routing transit numbers of the financial institution receiving payment (same as American Bankers Association identifying number used for TFCS).

SECTION G - (Continued)

(ii) Number of account to which funds are to be deposited.

(iii) Type of depositor account ("C" for checking, "S" for savings).

(iv) If the Contractor is a new enrollee to the ACH system, a "Payment Information Form," TFS 3882, must be completed before payment can be processed.

(3) In the event the Contractor, during the performance of this contract, elects to designate a different financial institution for the receipt of any payment made using electronic funds transfer procedures, notification of such change and the required information specified above must be received by the appropriate Government official 30 days prior to the date such change is to become effective.

(4) The documents furnishing the information required in this paragraph (c) must be dated and contain the signature, title, and telephone number of the Contractor official authorized to provide it, as well as the Contractor's name and contract number.

(5) Contractor failure to properly designate a financial institution or to provide appropriate payee bank account information may delay payments of amounts otherwise properly due.

G.2 DESIGNATED BILLING OFFICE

The contractor shall submit all original invoices with two copies to the designated billing office, which is:

Commander (vpl)
Maintenance and Logistics Command Pacific
Coast Guard Island
Alameda, CA 94501-5100
M/F: Contract No. DTCG85-88-C-55___ (Insert)

G.3 PARTIAL PAYMENTS

(a) The Contractor may invoice requesting partial payments without discount, other than any prompt payment discount offered, not more frequently than monthly. The Contractor may invoice requesting partial payments every two weeks if each such invoice includes a discount, other than any prompt payment discount offered, equivalent to the then-current published "Treasury Rate".

SECTION G - (Continued)

(b) The invoice amount shall reflect the actual number of rooms furnished to the Coast Guard.

(c) Submission of a proper invoice of any remaining amount due is required after the end of the period of performance.

SECTION H - SPECIAL CONTRACT REQUIREMENT

H.1 52.223-6 DRUG-FREE WORKPLACE (FEB 1989)

(a) Definitions. As use in this clause,

"Controlled substance" means a controlled substance in schedules I through V of section 202 of the Controlled Substances Act (21 U.S.C. 812) and as further defined in regulation at 21 CFR 1308.11-1308.15.

"Conviction" means a finding of guilt (including a plea of nolo contendere) or imposition of sentence, or both, by any judical body charged with the responsibility to determine violations of the Federal or State criminal drug statutes.

"Criminal drug statute" means a criminal statute involving the manufacture, distribution, dispensing, possession or use of any controlled substance.

"Drug-free workplace" means a site for the performance of work done in connection with a specific contract at which employees of the contractor are prohibited from engaging in the unlawful manufacture, distribution, dispensing, possession, or use of a controlled substance.

"Employee" means an employee of a contractor directly engaged in the performance of work under a Government contract.

"Individual" means an offeror/contractor that has no more than one employee including the offeror/contractor.

(b) The contractor, if other than an individual, shall --

(1) publish a statement notifying its employees that the unlawful manufacture, distribution, dispensing, possession, or use of a controlled substance is prohibited in the contractor's workplace and specifying the sections that will be taken against employees for violations of such prohibition;

SECTION H - (Continued)

(2) establish a drug-free awareness program to inform such employees about--

(A) the dangers of drug abuse in the workplace;

(B) the contractor's policy of maintaining a drug-free workplace;

(C) any available drug counseling, rehabilitation, and employee assistance programs; and

(D) the penalties that may be imposed upon employees for drug abuse violations;

(3) provide all employees engaged in performance of the contract with a copy of the statement required by (b)(1);

(4) notify such employees in the statement required by (b)(1), that as a condition of continued employment on the contract resulting from this solicitation, the employee will--

(A) abide by the terms of the statement; and

(B) notify the employer of any criminal drug statute conviction for a violation occurring in the workplace no later than five(5) days after such conviction;

(5) notify the contracting officer within ten (10) days after receiving notice under subparagraph 4(B), from an employee or otherwise receiving actual notice of such conviction;

(6) within 30 days after receiving notice under paragraph (5) of a conviction, impose the following sactions or

remedial measures on any employee who is convicted of drug abuse violations occurring in the workplace:

(i) taking appropriate personnel action against such employee, up to and including termination; or,

(ii) require such employee to satisfactorily participate in a drug abuse assistance or rehabilitation program approved for such purposes by a Federal, State, or local health, law enforcement, or other appropriate agency; and

(7) make a good faith effort to maintain a drug-free workplace through implementation of subparagraphs 1 through 6 above.

SECTION H - (Continued)

(c) The contractor, if an individual, agrees by award of the contract or acceptance of a purchase order, not to engage in the unlawful manufacture, distribution, dispensing, possession, or use of a controlled substance in the performance of this contract.

(d) In addition to other remedies available to the Government, the contractor's failure to comply with the requirements of paragraph (b) may, pursuant to FAR 23.506, render the contractor subject to suspension of contract payments, termination of the contract for default, and suspension or debarment.

SECTION I - CONTRACT CLAUSES

I.1 52.252-2 CLAUSES INCORPORATED BY REFERENCE (JUN 1988)

FEDERAL ACQUISITION REGULATION (48 CFR, CHAPTER 1), CLAUSES:

52.202-1 Definitions (APR 1984)
52.203-1 Officials Not to Benefit (APR 1984)
52.203-3 Gratuities (APR 1984)
52.203-5 Covenant Against Contingent Fees (APR 1984)
52.203-6 Restriction on Subcontractor Sales to the Government (JUL 1985)
52.203-7 Anti-Kickback Procedures (OCT 1988)
52.212-8 Defense Priority and Allocation Requirements (MAY 1986)
52.215-1 Examination of Records by Comptroller General(APR 1984)
52.215-2 Audit--Negotiation (APR 1988)
52.215-22 Price Reduction for Defective Cost or Pricing Data (APR 1988)
52.215-24 Subcontractor Cost or Pricing Data (APR 1985)
52.215-26 Integrity of Unit Prices [ALTERNATE I] (APR 1987)
52.215-33 Order of Precedence (JAN 1986)
52.219-8 Utilization of Small Business Concerns and Small Disadvantaged Business Concerns (JUN 1985)
52.219-13 Utilization of Women-Owned Small Businesses (AUG 1986)
52.219.14 Limitations on Subcontracting (OCT 1987)
52.220-3 Utilization of Labor Surplus Area Concerns (APR 1984)
52.222-20 Walsh-Healy Public Contracts Act (APR 1984)
52.222-26 Equal Opportunity (APR 1984)
52.222-35 Affirmative Action for Special Disabled and Vietnam Era Veterans (APR 1984)
52.222-36 Affirmative Action for Handicapped Workers (APR 1984)
52.223-2 Clean Air and Water (APR 1984)
52.225-3 Buy American Act--Supplies (JAN 1989)
52.227-1 Authorization and Consent (APR 1984)
52.227-2 Notice and Assistance Regarding Patent and Copyright Infringement (APR 1984)
52.229-3 Federal, State, and Local Taxes (APR 1984)

SECTION I - (Continued)

52.229-5 Taxes--Contracts Performed in U.S. Possessions or Puerto Rico (APR 1984)
52.232-1 Payments (APR 1984)
52.232-8 Discounts for Prompt Payment (JUL 1985)
52.232-11 Extras (APR 1984)
52.232-16 Progress Payments (AUG 1987)
52.232-17 Interest (APR 1984)
52.232-23 Assignment of Claims (JAN 1986)
52.233-1 Disputes (APR 1984)
52.233-3 Protest After Award (JUN 1985)
52.243-1 Changes--Fixed-Price (ALTERNATE II) (AUG 1987)
52.244-1 Subcontracts Under Fixed-Price Contracts (JAN 1986)
52.245-2 Government Property (Fixed-Price Contracts) (APR 1984)
52.249-2 Termination for Convenience of the Government (Fixed-Price) (APR 1984)
52.249-8 Default (Fixed Price- Supply & Service) (APR 1984)

TRANSPORTATION ACQUISITION REGULATIONS CLAUSES:

1252.217-70 Index for Specifications (JAN 1985)
1252.217-74 Subcontracts (JAN 1985)
1252.217-77 Title (APR 1984)
1252.217-78 Discharge of Liens (APR 1984)
1252.217-79 Delays (APR 1984)
1252.242-72 Dissemination of Contract Information (APR 1984)

SECTION J - LIST OF ATTACHMENTS

J.1 There are no attachments to this solicitation.

SECTION K - REPRESENTATIONS, CERTIFICATIONS AND OTHER STATEMENTS OF BIDDERS/OFFERORS

K.1 52.203-2 CERTIFICATE OF INDEPENDENT PRICE DETERMINATION(APR 1985)

(a) The offeror certifies that --

(1) The prices in this offer have been arrived at independently, without, for the purpose of restricting competition, any consultation, communication, or agreement with any other offeror or competitor relating to (i) those prices, (ii) the intention to submit an offer, or (iii) the methods or factors used to calculate the prices offered;

(2) The prices in this offer have not been and will not be knowingly disclosed by the offeror, directly or indirectly, to

SECTION K - (Continued)

any other offeror or competitor before bid opening (in the case of a sealed bid solicitation) or contract award (in the case of a negotiated solicitation) unless otherwise required by law; and

(3) No attempt has been made or will be made by the offeror to induce any other concern to submit or not to submit an offer for the purpose of restricting competition.

(b) Each signature on the offer is considered to be a certification by the signatory that the signatory --

(1) Is the person in the offeror's organization responsible for determining the prices being offered in this bid or proposal, and that the signatory has not participated and will not participate in any action contrary to subparagraphs (a)(1) through (a)(3) above; or

(2) (i) Has been authorized, in writing, to act as agent for the following principals in certifying that those principals have not participated, and will not participate in any action contrary to subparagraphs (a)(1) through (a)(3) above

_____

_____

[Insert Full name of person(s) in the offeror's organization responsible for determining the prices offered in this bid or proposal, and the title of his or her position in the offeror's organization];

(ii) As an authorized agent, does certify that the principals named in subdivision (b)(2)(i) above have not participated, and will not participate, in any action contrary to subparagraphs (a)(1) through (a)(3) above; and

(iii) As an agent, has not personally participated, and will not participate, in any action contrary to subparagraphs (a)(1) through (a) (3) above.

(c) If the offeror deletes or modifies subparagraph (a)(2) above, the offeror must furnish with its offer a signed statement setting forth in detail the circumstances of the disclosure.

K.2 52.203-4, CONTINGENT FEE REPRESENTATION AND AGREEMENT (APR 1984)

(a) REPRESENTATION. The offeror represents that, except for full-time bona fide employees working solely for the offeror, the offeror -- [NOTE: THE OFFEROR MUST CHECK THE APPROPRIATE BOXES. For interpretation of the representation, including the term "bona fide employee," see Subpart 3.4 of the Federal Acquisition Regulation.]

(1) [___] has, [_X_] has not employed or retained any person or company to solicit or obtain this contract; and

SECTION K - (Continued)

(2) [___] has, [X] has not paid or agreed to pay to any person or company employed or retained to solicit or obtain this contract any commission, percentage, brokerage, or other fee contingent upon or resulting from the award of this contract.

(b) AGREEMENT. The offeror agrees to provide information relating to the above Representation as requested by the Contracting Officer and, when subparagraph (a)(1) or (a)(2) is answered affirmatively, to promptly submit to the Contracting Officer -

(1) A completed Standard Form 119, Statement of Contingent or Other Fees, (SF 119); or

(2) A signed statement indicating that the SF 119 was previously submitted to the same contracting office, including the date and applicable solicitation or contract number, and representing that the prior SF 119 applies to this offer or quotation.

K.3 52.215-6 TYPE OF BUSINESS ORGANIZATION (JUL 1987)

The offeror, by checking the applicable box, represents that

A. It operates as

[X] a corporation incorporated under the laws of the State of _____

[ ] an individual,

[ ] a partnership,

[ ] a nonprofit organization, or

[ ] a joint venture; or

B. If the offeror is a foreign entity, it operates as

[ ] an individual,

[ ] a partnership,

[ ] a nonprofit organization,

[ ] a joint venture, or

[ ] a corporation, registered for business in

_____
(Country)

SECTION K - (Continued)

K.4 52.215.11 AUTHORIZED NEGOTIATORS (APR 1984)
The offeror or quoter represents that the following persons are authorized to negotiate on its behalf with the Government in connection with this request for proposals or quotations: [list names, titles, and telephone numbers of the authorized negotiators].

Hugh T. Kingrey, Proj Mgr, 503-285-7557

K.7 52.219-2, SMALL DISADVANTAGED BUSINESS CONCERN REPRESENTATION (APR 1984)

(a) Representation. The offeror represents that it [ ] is [X] is not a small disadvantaged business concern.

(b) Definitions.

"Asian-Indian American," as used in this provision, means a United States citizen whose origins are in India, Pakistan, or Bangladesh.

"Asian-Pacific American," as used in this provision, means a United States citizen whose origins are in Japan, China, the Philippines, Vietnam, Korea, Samoa, Guam, the U.S. Trust Territory of the Pacific Islands, the Northern Mariana Islands, Laos, Cambodia, or Taiwan.

"Native American," as used in this provision, means American Indians, Eskimos, Aleuts, and native Hawaiians.

"Small Business Concern," as used in this provision, means a concern, including its affiliates, that is independently owned and operated, not dominant in the field of operation in which it is bidding on Government contracts, and qualified as a small business under the criteria and size standards in 13 CFR 121.

"Small Disadvantaged Business Concern," as used in this provision, means a small business concern that (1) is at least 51 percent owned by one or more individuals who are both socially and economically disadvantaged, or a publicly owned business having at least 51 percent of its stock owned by one or more socially and economically disadvantaged individuals and (2) has its management and daily business controlled by one or more such individuals.

SECTION K - (Continued)

(c) Qualified groups. The offeror shall presume that socially and economically disadvantaged individuals include Black Americans, Hispanic Americans, Native Americans, Asian-Pacific Americans, Asian-Indian Americans and other individuals found to be qualified by the SBA under 13 CFR 124.1.

K.8 52.219-3 WOMEN-OWNED SMALL BUSINESS REPRESENTATION (APR 1984)

(a) Representation. The offeror represents that it
[ ] is, or
[X] is not a women-owned small business concern.

(b) Definitions.

"Small business concern," as used in this provision, means a concern, including its affiliates, that is independently owned and operated, not dominant in the field of operation in which it is bidding on Government contracts, and qualified as a small business under the criteria and size standards in 13 CFR 121.

"Women-owned," as used in this provision, means a small business that is at least 51 percent owned by a woman or women who are U.S. citizens and who also control and operate the business.

K.9 52.220-1 PREFERENCE FOR LABOR SURPLUS AREA CONCERNS (APR 1984)

(a) This acquisition is NOT a set aside for labor surplus area (LSA) concerns. However, the offeror's status as such a concern may affect (1) entitlement to award in case of tie offers

or (2) offer evaluation in accordance with the Buy American Act clause of this solicitation. In order to determine whether the offeror is entitled to a preference under (1) or (2), above, the offeror must identity, below, the LSA in which the costs to be incurred on account of manufacturing or production (by the offeror or the first-tier subcontractors) amount to more than 50 percent of the contract price.

_____

_____

(b) Failure to identify the locations as specified above will preclude consideration of the offeror as an LSA concern. If the offeror is awarded a contract as an LSA concern and would not have otherwise qualified for award the offeror shall perform the contract or cause the contract to be performed in accordance with the obligations of an LSA concern.

SECTION K - (Continued)

K.10 RESERVED

K.11 52.222-21 CERTIFICATION OF NONSEGREGATED FACILITIES (APR 1984)

(a) "Segregated facilities," as used in this provision, means any waiting rooms, work areas, rest rooms and wash rooms, restaurants and other eating areas, time clocks, locker rooms and other storage or dressing areas, parking lots, drinking fountains, recreation or entertainment areas, transportation, and housing facilities provided for employees, that are segregated by explicit directive or are in fact segregated on the basis of race, color, religion, or national origin because of habit, local custom, or otherwise.

(b) BY THE SUBMISSION OF THIS OFFER, the offeror certifies that it does not and will not maintain or provide for its employees any segregated facilities at any of its establishments, and that it does not and will not permit its employees to perform their services at any location under its control where segregated facilities are maintained. The offeror agrees that a breach of this certification is a violation of the Equal Opportunity clause in the contract.

(c) The offeror further agrees that (except where it has obtained identical certifications from proposed subcontractors for specific time periods) it will -

(1) Obtain identical certifications from proposed subcontractors before the award of subcontracts under which the subcontractor will be subject to the Equal Opportunity clause;

(2) Retain the certifications in the files; and

(3) Forward the following notice to the proposed subcontractors (except if the proposed subcontractors have submitted identical certifications for specific time periods):

NOTICE TO PROSPECTIVE SUBCONTRACTORS OF REQUIREMENT FOR CERTIFICATIONS OF NONSEGREGATED FACILITIES: A Certification of Nonsegregated Facilities must be submitted before the award of a subcontract under which the subcontractor will be subject to the Equal Opportunity clause. The certification may be submitted either for each subcontract or for all subcontracts during a period (i.e., quarterly, semiannually, or annually).

NOTE: The penalty for making false statements in offers is prescribed in 18 U.S.C. 1001.

SECTION K - (Continued)

K.12 52.222-22 PREVIOUS CONTRACTS AND COMPLIANCE REPORTS (APR 1984)

The offeror represents that -

(a) It [X] has, [ ] has not participated in a previous contract or subcontract subject either to the Equal Opportunity clause of this solicitation, the clause originally contained in Section 310 of Executive Order No. 10925, or the clause contained in Section 201 of Executive Order No. 11114;

(b) It [X] has, [ ] has not, filed all required compliance reports; and

(c) Representations indicating submission of required compliance reports, signed by proposed subcontractors, will be obtained before subcontract awards.

K.13 52.222-25 AFFIRMATIVE ACTION COMPLIANCE (APR 1984)

The offeror represents that (a) it [X] has developed and has on file, [ ] has not developed and does not have on file, at each establishment, affirmative action programs required by the rules and regulations of the Secretary of Labor (41 CFR 60-1 and 60-2), or (b) it [ ] has not previously had contracts subject to the written affirmative action programs requirement of the rules and regulations of the Secretary of Labor.

K.14 52.223-1 CLEAN AIR AND WATER CERTIFICATION (APR 1984)

The Offeror certifies that -

(a) Any facility to be used in the performance of this proposed contract [ ] is, [X] is not listed on the Environmental Protection Agency List of Violating Facilities;

(b) The Offeror will immediately notify the Contracting Officer, before award, of the receipt of any communication from the Administrator, or a designee, of the Environmental Protection Agency, indicating that any facility that the Offeror proposes to use for the performance of the contract is under consideration to be listed on the EPA List of Violating Facilities; and

(c) The Offeror will include a certification substantially the same as this certification, including this paragraph (c), in every nonexempt subcontract.

SECTION K - (Continued)

K.15 52.225-1 BUY AMERICAN CERTIFICATE (APR 1984)

The offeror certifies that each end product, except those listed below, is a domestic end product (as defined in the clause entitled "Buy American Act - Supplies"), and that components of unknown origin are considered to have been mined, produced, or manufactured outside the United States.

Excluded End Products	County of Origin
None	

(List as necessary)

Offerors may obtain from the Contracting Officer lists of articles, materials, and supplies excepted from the Buy American Act (listed at 25.108 of the Federal Acquisition Regulation).

K.16 CONGRESSIONAL/DUNS INFORMATION

Each bidder is requested to fill in the appropriate information set forth below:

(a) DUNS identification Number: 107970451

(This number is assigned by Dun & Bradstreet, Inc., and is contained in that company's Data Universal Numbering System (DUNS). If the number is not known, it can be obtained from the local Dun & Bradstreet Office. If no number has been assigned by Dun & Bradstreet, insert the word "None".)

(b) Home Office Congressional District: No. 1

(c) Principal Place of Performance under this contract

City and State): Portland, Oregon

(d) Congressional District of the Principal Place of

Performance: No. 1

(e) Congressional Representative:

NAME	PARTY
Packwood (Republican)	AuCoin (Democrat)
Hatfield (Republican)	Wyden (Democrat)

SECTION K - (Continued)

graphic abbreviation and American Bankers Association identifying number for the correspondent institution.

_____
Company Name

_____
Street Address

_____
City, State, Zip Code

_____
Telegraphic Abbreviation

_____
ABA Identifying Number

(2) For payment through ACH, the Contractor shall provide the following information:

(i) Routing transit numbers of the financial institution receiving payment (same as American Bankers Association identifying number used for TFCS).

_____

(ii) Number of account to which funds are to be deposited.

_____

(iii) Type of depositor account ("C" for checking, "S" for savings).

K.18 ADDRESS TO MAIL PAYMENTS

Bidders desiring payments to be mailed to an address different from the address shown in block 15A, SF 33, shall insert such address below:

_____
Company Name

_____
Street Address

_____
City, County, State, Zip Code

(iv) If the Contractor is a new enrollee to the ACH system, a "Payment Information Form," TFS 3882, must be completed before payment can be processed.

SECTION L - INSTRUCTIONS, CONDITIONS AND NOTICES TO BIDDERS

L.1 SMALL BUSINESS SIZE STANDARD

For the purpose of this solicitation, the small business size standard is $3,500,000. The SIC code is 7011.

L.2 52.252-1 SOLICITATION PROVISIONS INCORPORATED BY REFERENCE(APR84)

FEDERAL ACQUISITION REGULATION (48 CFR, CHAPTER 1), SOLICITATION PROVISIONS:

52.215-5 Solicitation Definitions (JUL 1985)
52.215-7 Unecessary Elaborate Proposals or Quotations(APR 1984)
52.215-8 Acknowledgment of Amendment to Solicitations (APR 1984)
52.215-9 Submission of Offers (APR 1984)
52.215-10 Late Submissions, Modifications, and Withdrawals of Proposals (APR 1984)
52.215-12 Restriction on Disclosure and Use of Data (APR 1984)
52.215-13 Preparation of Offers (APR 1984)
52.215-14 Explanation to Prospective Offerors (APR 1984)
52.215-15 Failure to Submit Offer (APR 1984)
52.215-16 Contract Award (APR 1985)
52.232-13 Notice of Progress Payments (APR 1974)

L.3 REQUIREMENT FOR SUBCONTRACTING REPORT

"Other than Small Business" prime contractors awarded contracts as a result of this solicitation must submit:

A. Standard Form 294, Subcontracting Report for Individual Contracts: Reports due semiannually as of 31 March and 30 September, and upon completion of this contract.

B. Standard Form 295, Summary Subcontract Report: For contract awards exceeding $500,000, P.L. 95-507 requires inclusion of FAR Clause 52.219-9 Small Business and Small Disadvantaged Business Subcontracting Plan (Alternate I) and submittal of Standard Form 295 report in accordance with the instructions on the reverse of the form.

L.4 DESCRIPTIVE INFORMATION

Under Federal Acquisition Regulation (FAR) "Sealed Bidding" procedures, offerors may not take exception to the terms of the solicitation unless and to the extent specifically indicated in the solicitation. Offerors are cautioned not to include any descriptive information with their offers that might render the offer non-responsive to the terms of this solicitation, and therefore not eligible for award even if offering the otherwise lowest prices.

SECTION L - (Continued)

L.5 52.233-2 SERVICE OF PROTEST (JAN 1985)

Protests, as defined in section 33.101 of the Federal Acquisition Regulation, shall be served on the Contracting Officer by obtaining written and dated acknowledgement of receipt from

Chief, Procurement and Logistics Branch,
Naval Engineering Division,
Maintenance and Logistics Command Pacific,
Coast Guard Island, Building 50-7,
Alameda, CA 94501-5100.

L.6 NOTICE OF PRE-AWARD SURVEY

(a) Offerors are advised that the Government may contact potential contractors to ascertain their capabilities to perform the work specified in this solicitation. In addition to financial statements and credit rating checks, the Government may visit a prospective contractor's facilities. Areas of Interest on this survey may include, but are not limited to the following:

(1) performance plans
(2) quality control or contractor quality assurance plans
(3) personnel recruitment and training plans
(4) workload factors for manpower utilization
(5) management plan for handling peak workloads
(6) production capability
  (i) plant facilities and equipment
  (ii) purchasing and subcontracting
  (iii) labor resources
  (iv) performance record
  (v) ability to meet delivery schedules
(7) environmental/energy considerations
(8) plant safety
(9) technical and/or professional abilities
(10) accounting systems
(11) security clearance
(12) Government property control

(b) Offerors are advised that accomplishment of this survey is a part of the evaluation process and is not to be construed as an indication that an offeror will receive or is in the best position to receive the resultant award.

SECTION K - (Continued)

K.17 INFORMATION REQUIRED FOR ELECTRONIC TRANSFER PAYMENT

Because ALL PAYMENTS BY THE GOVERNMENT OF MORE THAN $25,000 MUST BE TRANSMITTED ELECTRONICALLY, all offerors shall provide the appropriate information below. (SEE CLAUSE G.1)

(1) For payment through TFCS:

(i) Name, address, and telegraphic abbreviation of the financial institution receiving payment.

_____
Company Name

_____
Street Address

_____
City, State, Zip Code

_____
Telegraphic Abbreviation

(ii) The American Bankers Association 9-digit identifying number of the financing institution receiving payment if the institution has access to the Federal Reserve Communications System.

_____

(iii) Payee's account number at the financial institution where funds are to be transferred.

_____

(iv) If the financial institution does not have access to the Federal Reserve Communications System, name, address, and telegraphic abbreviation of the correspondent financial institution through which the financial institution receiving payment obtains electronic funds transfer messages. Provide the tele-

AMENDMENT OF SOLICITATION/MODIFICATION OF CONTRACT

1. CONTRACT ID CODE | PAGE 1 OF 1 PAGES

2. AMENDMENT/MODIFICATION NO.: 00002
3. EFFECTIVE DATE: 19 MAY 89
4. REQUISITION/PURCHASE REQ. NO.:
5. PROJECT NO. (If applicable): CGC POLAR SEA

6. ISSUED BY — CODE DTCG85

Commander (vpl)
Maintenance and Logistic Command Pacific
Coast Guard Island, Bldg. 50-7
Alameda, CA 94501-5100

7. ADMINISTERED BY (If other than Item 6) — CODE

8. NAME AND ADDRESS OF CONTRACTOR (No., street, county, State and ZIP Code)

Northwest Marine Iron Works
5555 N. Channel, Bldg.2
Portland, OR 97217 (503)285-7557

CODE | FACILITY CODE

(f) 9A. AMENDMENT OF SOLICITATION NO.

9B. DATED (SEE ITEM 11)

10A. MODIFICATION OF CONTRACT/ORDER NO.: DTCG85-89-C-55136

X 10B. DATED (SEE ITEM 13): 22 March 1989

11. THIS ITEM ONLY APPLIES TO AMENDMENTS OF SOLICITATIONS

☐ The above numbered solicitation is amended as set forth in Item 14. The hour and date specified for receipt of Offers ☐ is extended, ☐ is not extended.

Offers must acknowledge receipt of this amendment prior to the hour and date specified in the solicitation or as amended, by one of the following methods:

(a) By completing Items 8 and 15, and returning _____ copies of the amendment; (b) By acknowledging receipt of this amendment on each copy of the offer submitted; or (c) By separate letter or telegram which includes a reference to the solicitation and amendment numbers. FAILURE OF YOUR ACKNOWLEDGMENT TO BE RECEIVED AT THE PLACE DESIGNATED FOR THE RECEIPT OF OFFERS PRIOR TO THE HOUR AND DATE SPECIFIED MAY RESULT IN REJECTION OF YOUR OFFER. If by virtue of this amendment you desire to change an offer already submitted, such change may be made by telegram or letter, provided each telegram or letter makes reference to the solicitation and this amendment, and is received prior to the opening hour and date specified.

12. ACCOUNTING AND APPROPRIATION DATA (If required)

40 C 1 9 33 45.00.20 75171 2561 Increase: $73,396.00 New Total: $2,122,036.00

13. THIS ITEM APPLIES ONLY TO MODIFICATIONS OF CONTRACTS/ORDERS, IT MODIFIES THE CONTRACT/ORDER NO. AS DESCRIBED IN ITEM 14.

(f) A. THIS CHANGE ORDER IS ISSUED PURSUANT TO: (Specify authority) THE CHANGES SET FORTH IN ITEM 14 ARE MADE IN THE CONTRACT ORDER NO. IN ITEM 10A.

B. THE ABOVE NUMBERED CONTRACT/ORDER IS MODIFIED TO REFLECT THE ADMINISTRATIVE CHANGES (such as changes in paying office, appropriation data, etc.) SET FORTH IN ITEM 14, PURSUANT TO THE AUTHORITY OF FAR 43.103(b).

C. THIS SUPPLEMENTAL AGREEMENT IS ENTERED INTO PURSUANT TO AUTHORITY OF:

D. OTHER (Specify type of modification and authority)

X Supplemental Award: per Section M.3.B of the Contract

E. IMPORTANT: Contractor ☒ is not, ☐ is required to sign this document and return _____ copies to the issuing office.

14. DESCRIPTION OF AMENDMENT/MODIFICATION (Organized by UCF section headings, including solicitation/contract subject matter where feasible.)

A. Optional Award of Optional Item O-2 for the amount of $73,396.00 per attached Change Order Request Authorization Form.

Except as provided herein, all terms and conditions of the document referenced in Item 9A or 10A, as heretofore changed, remains unchanged and in full force and effect.

15A. NAME AND TITLE OF SIGNER (Type or print)

15B. CONTRACTOR/OFFEROR — (Signature of person authorized to sign)

15C. DATE SIGNED

16A. NAME AND TITLE OF CONTRACTING OFFICER (Type or print): JOHN C. PORTER

16B. UNITED STATES OF AMERICA — BY _____ (Signature of Contracting Officer)

16C. DATE SIGNED: 5/19/89

Department of Transportation // U.S. Coast Guard // MLCPAC/vpl-1 (5-89)

CHANGE ORDER REQUEST / AUTHORIZATION

Ship	Contract No	Request No	Page 1 of
CGC POLAR SEA (WAGB-11)	DTCG85-89-B-55136	R-Ø33	1

PART I. REQUEST. The COTR certifies that the work described below must be performed during this availability and requests issuance of a Change Order.

CHANGE ORDER SPECIFICATION CHANGE ITEM# D4 O-2 as changed by R- Ø33

TITLE: TOPSIDE PAINTING

REQUEST OPEN OPTIONAL ITEM O-02 TOPSIDE PAINTING.

FOR VAD + VPL

: FTA 33-93-89 - add'l HQ funding ($50K)
RECEIVED 5/19

per phoncon LT HOFFMAN (PACAREA)/LCDR GAMBLE (MLCPAC vpl)

Ship's POC: CWO R. E. GARMAN | Ref CFR: NONE

Specifications Prepared by:	Date:	COTR Approval:	Date:
R. E. Garman R. E. GARMAN, CWO, USCG	5/18/89 18MAY89	J. J. MCCLELLAND, CAPT, USCG	18 MAY 89

PART II. TECHNICAL APPROVAL, P.R. AND STATEMENT OF ESSENTIAL NEED.

1. Description: See Specification in Part I.
2. Primary Need: [X] GROWTH WORK [ ] NEW WORK
   Add to Basic Item # _____ Add Item # _____
3. Impact of Denial: [ ] Mission Essential or [ ] Health and Safety

MLC SRD SEATTLE Review:	Date:	MLC Tech Approval:	Date:	Funds Approval:
G. [illegible] EVAN, LCDR	5/18/89	J. J. GAMBLE, LCDR, USCG	5/19/89	5/19

FUND CITATION:
40-C-1-9-33-45.00.20-75171-2561
→ (OG-30 funds)

ORIG EST $ 73,396.00

REV EST $ _____

PART III. SETTLEMENT AGREEMENT By signature below the parties agree that this settlement is considered fair and reasonable and that it constitutes full and final equitable adjustment for this change. The contractor releases the Government from any liability under this contract for further equitable adjustments attributable to facts & circumstances or impact of this change.

CONTRACTOR MUST CHECK ONE OF THE FOLLOWING:

[ ] The contract completion date is extended to _____
[X] The contract completion date is not extended because of this change.

SETTLEMENT PRICE: $ 73,396.00 | CHANGE ORDER # A- N/A

J. C. PORTER Contracting Officer	19 May 1989 @ 1300 Proceed as of Date/Time	N/A Contractor

AMENDMENT OF SOLICITATION/MODIFICATION OF CONTRACT

1. CONTRACT ID CODE

PAGE 1 OF 1 PAGES

2. AMENDMENT/MODIFICATION NO.	3. EFFECTIVE DATE	4. REQUISITION/PURCHASE REQ. NO.	5. PROJECT NO. (If applicable)
00003	22 MAY 89		CGC POLAR SEA

6. ISSUED BY CODE DTOG85

Commander (vpl)
Maintenance and Logistic Command Pacific
Coast Guard Island, Bldg. 50-7
Alameda, CA 94501-5100

7. ADMINISTERED BY (If other than Item 6) CODE

8. NAME AND ADDRESS OF CONTRACTOR (No., street, county, State and ZIP Code)

Northwest Marine Iron Works
5555 N. Channel, Bldg.2
Portland, OR 97217 (503)285-7557

CODE FACILITY CODE

(✓) 9A. AMENDMENT OF SOLICITATION NO.

9B. DATED (SEE ITEM 11)

X 10A. MODIFICATION OF CONTRACT/ORDER NO. DTOG85-89-C-55136

10B. DATED (SEE ITEM 13) 22 March 1989

11. THIS ITEM ONLY APPLIES TO AMENDMENTS OF SOLICITATIONS

☐ The above numbered solicitation is amended as set forth in Item 14. The hour and date specified for receipt of Offers ☐ is extended, ☐ is not extended.

Offers must acknowledge receipt of this amendment prior to the hour and date specified in the solicitation or as amended, by one of the following methods:

(a) By completing Items 8 and 15, and returning _____ copies of the amendment; (b) By acknowledging receipt of this amendment on each copy of the offer submitted; or (c) By separate letter or telegram which includes a reference to the solicitation and amendment numbers. FAILURE OF YOUR ACKNOWLEDGMENT TO BE RECEIVED AT THE PLACE DESIGNATED FOR THE RECEIPT OF OFFERS PRIOR TO THE HOUR AND DATE SPECIFIED MAY RESULT IN REJECTION OF YOUR OFFER. If by virtue of this amendment you desire to change an offer already submitted, such change may be made by telegram or letter, provided each telegram or letter makes reference to the solicitation and this amendment, and is received prior to the opening hour and date specified.

12. ACCOUNTING AND APPROPRIATION DATA (If required)
40 C 1 9 33 45.00.20 75171 2561 Increase: $858.00 New Total: $2,122,894.00

13. THIS ITEM APPLIES ONLY TO MODIFICATIONS OF CONTRACTS/ORDERS, IT MODIFIES THE CONTRACT/ORDER NO. AS DESCRIBED IN ITEM 14.

(✓) A. THIS CHANGE ORDER IS ISSUED PURSUANT TO: (Specify authority) THE CHANGES SET FORTH IN ITEM 14 ARE MADE IN THE CONTRACT ORDER NO. IN ITEM 10A.

B. THE ABOVE NUMBERED CONTRACT/ORDER IS MODIFIED TO REFLECT THE ADMINISTRATIVE CHANGES (such as changes in paying office, appropriation date, etc.) SET FORTH IN ITEM 14, PURSUANT TO THE AUTHORITY OF FAR 43.103(b).

X C. THIS SUPPLEMENTAL AGREEMENT IS ENTERED INTO PURSUANT TO AUTHORITY OF:
Bilateral Agreement as set forth on the attached Change/Request Authorization Forms.

D. OTHER (Specify type of modification and authority)

E. IMPORTANT: Contractor ☒ is not, ☐ is required to sign this document and return _____ copies to the issuing office.

14. DESCRIPTION OF AMENDMENT/MODIFICATION (Organized by UCF section headings, including solicitation/contract subject matter where feasible.)

A. Incorporate the following changes at the prices stated below and as described on the attached Change Request/Authorization Forms.

Agreement #	Request #	Basic Item #	Amount
A-01	R-04	D-02	$858.00
		TOTAL:	$858.00

Except as provided herein, all terms and conditions of the document referenced in Item 9A or 10A, as heretofore changed, remains unchanged and in full force and effect.

15A. NAME AND TITLE OF SIGNER (Type or print)

16A. NAME AND TITLE OF CONTRACTING OFFICER (Type or print)
JOHN C. PORTER

15B. CONTRACTOR/OFFEROR
(Signature of person authorized to sign)

15C. DATE SIGNED

16B. UNITED STATES OF AMERICA
BY J. Porter
(Signature of Contracting Officer)

16C. DATE SIGNED 5/22/89

NSN 7540-01-152-8070
PREVIOUS EDITION UNUSABLE

30-105

STANDARD FORM 30 (REV. 10-83)
Prescribed by GSA
FAR (48 CFR) 53.243

NWMAR127888

AMENDMENT OF SOLICITATION/MODIFICATION OF CONTRACT | 1 | 2

2. AMENDMENT/MODIFICATION NO.	3. EFFECTIVE DATE	4. REQUISITION/PURCHASE REQ. NO.	5. PROJECT NO. (If applicable)
00004	25 MAY 89		CGC POLAR SEA

6. ISSUED BY CODE DTCG85

Commander (vpl)
Maintenance and Logistic Command Pacific
Coast Guard Island, Bldg. 50-7
Alameda, CA 94501-5100

7. ADMINISTERED BY (If other than Item 6) CODE

8. NAME AND ADDRESS OF CONTRACTOR (No., street, county, State and ZIP Code)

Northwest Marine Iron Works
5555 N. Channel, Bldg.2
Portland, OR 97217 (503)285-7557

CODE FACILITY CODE

(✓) 9A. AMENDMENT OF SOLICITATION NO.

9B. DATED (SEE ITEM 11)

X 10A. MODIFICATION OF CONTRACT/ORDER NO. DTCG85-89-C-55136

10B. DATED (SEE ITEM 13) 22 March 1989

11. THIS ITEM ONLY APPLIES TO AMENDMENTS OF SOLICITATIONS

☐ The above numbered solicitation is amended as set forth in Item 14. The hour and date specified for receipt of Offers ☐ is extended, ☐ is not extended.

Offers must acknowledge receipt of this amendment prior to the hour and date specified in the solicitation or as amended, by one of the following methods:

(a) By completing Items 8 and 15, and returning _____ copies of the amendment; (b) By acknowledging receipt of this amendment on each copy of the offer submitted; or (c) By separate letter or telegram which includes a reference to the solicitation and amendment numbers. FAILURE OF YOUR ACKNOWLEDGMENT TO BE RECEIVED AT THE PLACE DESIGNATED FOR THE RECEIPT OF OFFERS PRIOR TO THE HOUR AND DATE SPECIFIED MAY RESULT IN REJECTION OF YOUR OFFER. If by virtue of this amendment you desire to change an offer already submitted, such change may be made by telegram or letter, provided each telegram or letter makes reference to the solicitation and this amendment, and is received prior to the opening hour and date specified.

12. ACCOUNTING AND APPROPRIATION DATA (If required)
SEE ATTACHED Increase: <$69,860.00> New Total: $2,053,034.00

13. THIS ITEM APPLIES ONLY TO MODIFICATIONS OF CONTRACTS/ORDERS, IT MODIFIES THE CONTRACT/ORDER NO. AS DESCRIBED IN ITEM 14.

(✓) A. THIS CHANGE ORDER IS ISSUED PURSUANT TO: (Specify authority) THE CHANGES SET FORTH IN ITEM 14 ARE MADE IN THE CONTRACT ORDER NO. IN ITEM 10A.

B. THE ABOVE NUMBERED CONTRACT/ORDER IS MODIFIED TO REFLECT THE ADMINISTRATIVE CHANGES (such as changes in paying office, appropriation date, etc.) SET FORTH IN ITEM 14, PURSUANT TO THE AUTHORITY OF FAR 43.103(b).

X C. THIS SUPPLEMENTAL AGREEMENT IS ENTERED INTO PURSUANT TO AUTHORITY OF:
Bilateral Agreement as set forth on the attached Change Request/Authorization Forms.

D. OTHER (Specify type of modification and authority)

E. IMPORTANT: Contractor ☒ is not, ☐ is required to sign this document and return _____ copies to the issuing office.

14. DESCRIPTION OF AMENDMENT/MODIFICATION (Organized by UCF section headings, including solicitation/contract subject matter where feasible.)

SEE ATTACHED

Except as provided herein, all terms and conditions of the document referenced in Item 9A or 10A, as heretofore changed, remains unchanged and in full force and effect.

15A. NAME AND TITLE OF SIGNER (Type or print)		16A. NAME AND TITLE OF CONTRACTING OFFICER (Type or print)	
		JOHN C. PORTER	
15B. CONTRACTOR/OFFEROR (Signature of person authorized to sign)	15C. DATE SIGNED	16B. UNITED STATES OF AMERICA BY J. Porter (Signature of Contracting Officer)	16C. DATE SIGNED 5/25/89

NSN 7540-01-152-8070
PREVIOUS EDITION UNUSABLE

30-105

STANDARD FORM 30 (REV. 10-83)
Prescribed by GSA
FAR (48 CFR) 53.243

NWMAR127889

DRYDOCKING AND REPAIRS TO USCGC POLAR SEA (WAGB 11)

A. This Unilateral Change Order provides for the following changes at the prices stated below as described on the attached Change Request/Authorization forms.

Agreement #	Request #	Basic Item #	AMOUNT
A-03	R-018	D-24	$3,246.00
A-05	R-002	D-34	<$63,346.00>
A-06	R-007A	D-11	$2,767.00
A-07	R-019	D-10	$837.00
A-08	R-015	D-29	$1,725.00
A-10	R-014	D-12	$3,887.00
A-11	R-008	D-42	<$31,304.00>
A-12	R-020	D-17	$800.00
A-13	R-012	D-21	0.00
A-14	R-022A	D-09	$10,074.00
A-15	R-016	D-13	$1,086.00
A-16	R-021	D-21	$368.00
CANCELLED	R-013	D-01	0.00
CANCELLED	R-011	D-09	0.00
CANCELLED	R-010	D-24	0.00
		TOTAL	**<$69,860.00>**

B. These Accounting Data applies:

40 C 1 9 33 45.00.20 75171 2561	$56,370.00
40 C 1 9 33 45.00.20 75171 2552	$13,490.00

Department of Transportation U.S. Coast Guard / MLCPAC/vpl-1 (9-89)

CHANGE ORDER REQUEST AUTHORIZATION

Ship	Contract No	Request No	Page 1 of
CGC POLAR SEA (WAGB-11)	DTCG85-89-B-55136	R-018	1

PART I. REQUEST. The COTR certifies that the work described below must be performed during this availability and requests issuance of a Change Order.

CHANGE ORDER SPECIFICATION CHANGE ITEM# D-24 as changed by R-018

TITLE: GAS FREE DEPT. OF FUEL TK 4-171-2-F - Clean and gas free fuel tank 4-171-2-F prior to starting any hot work on or adjacent to the tank plating.

US COAST GUARD MLC PAC NAVAL ENGINEERING PROCUREMENT 1989 MAY 25 A 7 06

Ship's POC: LT AHOLT Ref CFR N/A

Specifications Prepared by:	Date:	COTR Approval:	Date:
E. E. MOORE, LCDR, USCG		J. J. MCCLELLAND, CAPT, USCG	9MAY89

PART II. TECHNICAL APPROVAL, F.R. AND STATEMENT OF ESSENTIAL NEED.

1. Description: See Specification in Part I.
2. Primary Need: [X] GROWTH WORK [ ] NEW WORK
   Add to Basic Item # Add Item #
3. Impact of Denial: [X] Mission Essential or [ ] Health and Safety

MLC SRD SEATTLE Review:	Date:	(vr) Tech Approval:	Date:	Funds Approval:
C. L. SWAN, LCDR		J. G. GAMBLE, LCDR, USCG		/

FUND CITATION: ORIG EST # [redacted]
40-C-1-9-33- - -
REV EST #

PART III. SETTLEMENT AGREEMENT By signature below the parties agree that this settlement is considered fair and reasonable and that it constitutes full and final equitable adjustment for this change. The contractor releases the Government from any liability under this contract for further equitable adjustments attributable to facts & circumstances or impact of this change.

CONTRACTOR MUST CHECK ONE OF THE FOLLOWING:

[ ] The contract completion date is extended to _____

[X] The contract completion date is not extended because of this change.

SETTLEMENT PRICE: $ 3246.00 CHANGE ORDER # A-3

J. D. PORTER Contracting Officer	5-9-89 4:15PM Proceed as of Date/Time	Contractor

NWMAR127891

Department of Transportation // U.S. Coast Guard // MLCPAC/vpl-1 (8-87)

CHANGE ORDER REQUEST / AUTHORIZATION

Ship	Contract No	Request No	Page 1 of
CGC POLAR SEA (WAGB-11)	DTCG85-89-B-55136	R-002	1

PART I. REQUEST. The COTR certifies that the work described below must be performed during this availability and requests issuance of a Change Order.

CHANGE ORDER SPECIFICATION CHANGE ITEM# D-34 as changed by R- 002

TITLE: CANCEL ET SHOP RENOVATION

Cancel Definite Item D-34 "Electronics Space Renovation" in its entirety.

U.S. COAST GUARD MLC PAC NAVAL ENGINEERING PROCUREMENT 1989 MAY 25 A 7:06

Ship's POC: LCDR R. D. POORE | Ref CFR: N/A

Specifications Prepared by:	Date:	COTR Approval:	Date:
R. D. POORE, LCDR, USCG	4/20/89	D. J. MCCLELLAND, CAPT, USCG	20 APR 89

PART II. TECHNICAL APPROVAL, P.R. AND STATEMENT OF ESSENTIAL NEED.

1. Description: See Specification in Part I.
2. Primary Need: [X] GROWTH WORK Add to Basic Item # _____ | [ ] NEW WORK Add Item # _____
3. Impact of Denial: [X] Mission Essential / [ ] Health and Safety

MLC SRD SEATTLE Review:	Date:	(vr) Tech Approval:	Date:	Funds Approval:
G. D. SWAN, LCDR	4/21/89	J. Q. GAMBLE, LCDR, USCG		/

FUNDING: 40-C- - - - - - EST $ _____

PART III. SETTLEMENT AGREEMENT By signature below the parties agree that this settlement is considered fair and reasonable and that it constitutes full and final equitable adjustment for this change. The contractor releases the Government from any liability under this contract for further equitable adjustments attributable to facts & circumstances or impact of this change.

CONTRACTOR MUST CHECK ONE OF THE FOLLOWING:

[ ] The contract completion date is extended to _____

[X] The contract completion date is not extended because of this change.

SETTLEMENT PRICE: $ <63346> | **CHANGE ORDER #** A- 5

J. C. PORTER Contracting Officer	5-10-89 4:45 PM Proceed as of Date/Time	Contractor

NWMAR127892

Department of Transportation // U.S. Coast Guard // MLCPAC/vpl-1 (5-89)

CHANGE ORDER REQUEST / AUTHORIZATION

Ship	Contract No	Request No	Page 1 of
CGC POLAR SEA (WAGB-11)	DTCG85-89-B-55136	R-007A	2

PART I. REQUEST. The COTR certifies that the work described below must be performed during this availability and requests issuance of a Change Order.

CHANGE ORDER SPECIFICATION CHANGE ITEM# D-11 as changed by R-007A

TITLE: SEA STRAINER OVERHAUL

US COAST GUARD MLC PAC
NAVAL ENGINEERING
PROCUREMENT
1989 MAY 25 A 7 06

Ship's POC: MKC VOLPE/MK1 CROCKETT

Ref CFR: N/A

Specifications Prepared by:	Date:	COTR Approval:	Date:
R. D. MOORE, LCDR, USCG	5/12/89	J. J. MCCLELLAND, CAPT, USCG	12.5.89

PART II. TECHNICAL APPROVAL, P.R. AND STATEMENT OF ESSENTIAL NEED.

1. Description: See Specification in Part I.
2. Primary Need: [ ] GROWTH WORK Add to Basic Item # [ ] NEW WORK Add Item #
3. Impact of Denial: [ ] Mission Essential or [ ] Health and Safety

MLC SRD SEATTLE Review:	Date:	(vr) Tech Approval:	Date:	Funds Approval:
G. L. SWAN, LCDR		J. Q. GAMBLE, LCDR, USCG		/

FUND CITATION:
40-C-1-9-33- - -

ORIG EST $_____

REV EST $_____

PART III. SETTLEMENT AGREEMENT By signature below the parties agree that this settlement is considered fair and reasonable and that it constitutes full and final equitable adjustment for this change. The contractor releases the Government from any liability under this contract for further equitable adjustments attributable to facts & circumstances or impact of this change.

CONTRACTOR MUST CHECK ONE OF THE FOLLOWING:

[ ] The contract completion date is extended to _____

[X] The contract completion date is not extended because of this change.

SETTLEMENT PRICE: $ 2767.00 CHANGE ORDER # A- 006

J. C. PORTER	5-16-89 10:15 Am	
Contracting Officer	Proceed as of Date/Time	Contractor

NWMAR127893

Department of Transportation / U.S. Coast Guard // MLCPAC (p)-1 (5-89

CHANGE ORDER REQUEST / AUTHORIZATION

Ship	Contract No	Request No	Page 1 of
CGC POLAR SEA (WAGB-11)	DTCG55-89-B-55136	R-019	2

PART I. REQUEST. The COTR certifies that the work described below must be performed during this availability and requests issuance of a Change Order.

CHANGE ORDER SPECIFICATION CHANGE ITEM# D-10 as changed by R-01

TITLE: FIREMAIN WYE GATES

I-100A

US COAST GUARD MLC PAC
NAVAL ENGINEERING
PROCUREMENT
1989 MAY 25 A 7 06

Ship's POC: CGC Stewart Ref CFR: N/A

Specifications Prepared by:	Date:	COTR Approval:	Date:
R. J. AVOLE, LCDR, USCG	5/10/89	J. A. MCCLELLAND, LCDR, USCG	11 MAY 89

PART II. TECHNICAL APPROVAL, P.R. AND STATEMENT OF ESSENTIAL NEED.

1. Description: See Specification in Part I.
2. Primary Need: [X] GROWTH WORK Add to Basic Item # D-10 [ ] NEW WORK Add Item #
3. Impact of Denial: [X] Mission Essential or [ ] Health and Safety

MLC GPD SEATTLE Review:	Date:	(vr) Tech Approval:	Date:	Funds Approval:
G. L. SWAN, LCDR		J. G. GAMBLE, LCDR, USCG		/

FUND CITATION: 40-C-1-9-33- - -

OPIC EST $_____

PFV EST $_____

PART III. SETTLEMENT AGREEMENT By signature below the parties agree that this settlement is considered fair and reasonable and that it constitutes full and final equitable adjustment for this change. The contractor releases the Government from any liability under this contract for further equitable adjustments attributable to facts & circumstances of impact of this change.

CONTRACTOR MUST CHECK ONE OF THE FOLLOWING:

[ ] The contract completion date is extended to _____

[X] The contract completion date is not extended because of this change.

SETTLEMENT PRICE: $ 837.00 CHANGE ORDER # A- 007

J. C. PORTER, Contracting Officer	5-18-89 12:25 PM Proceed as of Date/Time	Contractor

NWMAR127894

Department of Transportation // U.S. Coast Guard // MLCPAC/vpl-1 (5-89)

CHANGE ORDER REQUEST / AUTHORIZATION

Ship	Contract No	Request No	Page 1 of
CGC POLAR SEA (WAGB-11)	DTCG85-89-8-55136	R-015	2

PART I. REQUEST. The COTR certifies that the work described below must be performed during this availability and requests issuance of a Change Order.

CHANGE ORDER SPECIFICATION CHANGE ITEM# D-29 as changed by R- 015

TITLE: GAYLORD ELECTRICAL CONTROLS

I-290A

SEE ATTACHED SHEET

US COAST GUARD MLC PAC
NAVAL ENGINEERING
PROCUREMENT
1989 MAY 25 A 8:06

Ship's POC: EMCM MOSPENS | Ref CFR: 46

Specifications Prepared by: R. D. MOORE, LCDR, USCG | Date: 5/10/89 | COTR Approval: J. J. MCCLELLAND, CAPT, USCG | Date: May 19

PART II. TECHNICAL APPROVAL, P.R. AND STATEMENT OF ESSENTIAL NEED.

1. Description: See Specification in Part I.
2. Primary Need: [ ] GROWTH WORK Add to Basic Item # | [ ] NEW WORK Add Item #
3. Impact of Denial: [ ] Mission Essential or [ ] Health and Safety

MLC SRD SEATTLE Review: G. L. SWAN, LCDR | Date: | (vr) Tech Approval: J. Q. GAMBLE, LCDR, USCG | Date: | Funds Approval: /

FUND CITATION:
40-C-1-9-33- - -

ORIG EST $_____

REV EST $_____

PART III. SETTLEMENT AGREEMENT By signature below the parties agree that this settlement is considered fair and reasonable and that it constitutes full and final equitable adjustment for this change. The contractor releases the Government from any liability under this contract for further equitable adjustments attributable to facts & circumstances or impact of this change.

CONTRACTOR MUST CHECK ONE OF THE FOLLOWING:

[ ] The contract completion date is extended to _____

[X] The contract completion date is not extended because of this change.

SETTLEMENT PRICE: $ 1725.00 | CHANGE ORDER # A- 008

J. C. PORTER Contracting Officer	5-18-89 12:15 Pm Proceed as of Date/Time	Contractor

NWMAR127895

Department of Transportation // U.S. Coast Guard // MLCPAC/vpl-1 (5-89)

CHANGE ORDER REQUEST / AUTHORIZATION

Ship	Contract No	Request No	Page 1 of
CGC POLAR SEA (WAGB-11)	DTCG85-89-B-55136	R-007A	2

PART I. REQUEST. The COTR certifies that the work described below must be performed during this availability and requests issuance of a Change Order.

CHANGE ORDER SPECIFICATION CHANGE ITEM# D-11 as changed by R-007A

TITLE: SEA STRAINER OVERHAUL

1989 MAY 25 A 7 06
US COAST GUARD MLC PAC
NAVAL ENGINEERING
PROCUREMENT

Ship's POC: MKC VOLPE/MK1 CROCKETT Ref CPR: N/A

Specifications Prepared by:	Date:	COTR Approval:	Date:
R. D. POORE, LCDR, USCG	5/12/89	J. J. MCCLELLAND, CAPT, USCG	12-5-89

PART II. TECHNICAL APPROVAL, P.R. AND STATEMENT OF ESSENTIAL NEED.

1. Description: See Specification in Part I.
2. Primary Need: [ ] GROWTH WORK Add to Basic Item # [ ] NEW WORK Add Item #
3. Impact of Denial: [ ] Mission Essential or [ ] Health and Safety

MLC SRD SEATTLE Review:	Date:	(vr) Tech Approval:	Date:	Funds Approval:
G. L. SWAN, LCDR		J. Q. GAMBLE, LCDR, USCG		/

FUND CITATION:
40-C-1-9-33- - -

ORIG EST $

REV EST $

PART III. SETTLEMENT AGREEMENT By signature below the parties agree that this settlement is considered fair and reasonable and that it constitutes full and final equitable adjustment for this change. The contractor releases the Government from any liability under this contract for further equitable adjustments attributable to facts & circumstances or impact of this change.

CONTRACTOR MUST CHECK ONE OF THE FOLLOWING:

[ ] The contract completion date is extended to

[X] The contract completion date is not extended because of this change.

SETTLEMENT PRICE: $ 2767.00 CHANGE ORDER # A- 006

J. C. PORTER Contracting Officer	5-16-89 10:15 Am Proceed as of Date/Time	Contractor

NWMAR127896

Department of Transportation / U.S. Coast Guard / MLCPac (p-1) (5-88)

CHANGE ORDER REQUEST / AUTHORIZATION

Ship	Contract No	Request No	Page 1 of
CGC POLAR SEA (WAGB-11)	DTCG85-89-B-55136	R-019	2

PART I. REQUEST. The COTR certifies that the work described below must be performed during this availability and requests issuance of a Change Order.

CHANGE ORDER SPECIFICATION CHANGE ITEM# D-10 as changed by A-01

TITLE: FIREMAIN WYE GATES

I-100A

US COAST GUARD MLC PAC
NAVAL ENGINEERING
PROCUREMENT
1989 MAY 25 A 7 06

Ship's POC: CGC Stewart Ref CFR: N/A

Specifications Prepared by:	Date:	COTR Approval:	Date:
[illegible], LCDR, USCG	5/10/89	J. A. McCLELLAND, LCDR, USCG	11 May 89

PART II. TECHNICAL APPROVAL, P.R. AND STATEMENT OF ESSENTIAL NEED.

1. Description: See Specification in Part I.
2. Primary Need: [X] GROWTH WORK [ ] NEW WORK
   Add to Basic Item # D-10 Add Item #
3. Impact of Denial: [X] Mission Essential or [ ] Health and Safety

MLC SPD SEATTLE Review:	Date:	(vr) Tech Approval:	Date:	Funds Approval:
G. L. SWAN, LCDR		J. G. GAMBLE, LCDR, USCG		

FUND CITATION: ORIG EBT #_____
40-0-1-9-33- - -
PRV EBT #_____

PART III. SETTLEMENT AGREEMENT By signature below the parties agree that this settlement is considered fair and reasonable and that it constitutes full and final equitable adjustment for this change. The contractor releases the Government from any liability under this contract for further equitable adjustments attributable to facts & circumstances or impact of this change.

CONTRACTOR MUST CHECK ONE OF THE FOLLOWING:

[ ] The contract completion date is extended to _____
[X] The contract completion date is not extended because of this change.

SETTLEMENT PRICE: $ 837.00 CHANGE ORDER # A- 007

J. D. PORTER, Contracting Officer	5-18-89 12:25 PM Proceed as of Date/Time	Contractor

NWMAR127897

Department of Transportation // U.S. Coast Guard // MLCPAC/vpl-1 (8-87)

CHANGE ORDER REQUEST / AUTHORIZATION

Ship	Contract No	Request No	Page 1 of
USCGC POLAR SEA (WAGB 11)	DTCC85-89-B-55136	R- 014	2

PART I. REQUEST. The COTR certifies that the work described below must be performed during this availability and requests issuance of a Change Order.

CHANGE ORDER SPECIFICATION CHANGE ITEM# D-12 as changed by R- 014

TITLE: RUDDER STOCK GREASE LINE RENEWAL

US COAST GUARD MLC PAC
NAVAL ENGINEERING
PROCUREMENT
1989 MAY 25 A 7 08

Ship's POC: MK1 GRIFFEN/MK1 GREEN | Ref CFR: 12

Specifications Prepared by	Date	COTR Approval	Date
R. D. FOORE, LCDR	5/11/89	J. W. MCCLELLAND, CAPT	11 MAY 89

PART II. TECHNICAL APPROVAL, P.R. AND STATEMENT OF ESSENTIAL NEED.

1. Description: See Specification in Part I.
2. Primary Need: [ ] GROWTH WORK Add to Basic Item # | [ ] NEW WORK Add Item #
3. Impact of Denial: [ ] Mission Essential / [ ] Health and Safety

SRD Review:	Date:	(vp) Tech Approval:	Date:	Funds Approval:
G. L. SWAN, LCDR		J. Q. GAMBLE, LCDR		/

FUNDING: 40-0- - - - - - EST $_____

PART III. SETTLEMENT AGREEMENT (pending mod).

[ ] The contract completion date is extended to _____

[X] The contract completion date is not extended because of this change.

SETTLEMENT PRICE: $ 3887.00 | CHANGE ORDER # A- A-10

J. D. PORTER	5-19-89 3:45	
Contracting Officer	Proceed as of Date/Time	Contractor

NWMAR127898

Department of Transportation // U.S. Coast Guard // MLCPAC vpl-1 (6-87)

CHANGE ORDER REQUEST / AUTHORIZATION

Ship	Contract No	Request No	Page 1 of
USCGC POLAR SEA (WAGB 11)	DTCG87-89-B-55136	R-8	1

PART I. REQUEST. The COTR certifies that the work described below must be performed during this availability and requests issuance of a Change Order.

CHANGE ORDER SPECIFICATION CHANGE ITEM# D-42 as changed by R-

TITLE: DELETION OF DEFINITE ITEM D-42 (OPP VALVE ADDITIONS)

US COAST GUARD MLC PAC
NAVAL ENGINEERING
PROCUREMENT
1989 MAY 25 A 7 06

REF CFR: NONE

Ship's POC: CWO STEINHORST/MKC VOLPE | Ref CFR: N/A

Specifications Prepared by	Date	COTR Approval	Date
T. W. PUGRE, LCDR	5/3/89	M. O. MCCLELLAND, LCDR	5 MAY 89

PART II. TECHNICAL APPROVAL, P.R. AND STATEMENT OF ESSENTIAL NEED.

1. Description: See Specification in Part I.
2. Primary Need: [X] GROWTH WORK [ ] NEW WORK
   Add to Basic Item # Add Item #
3. Impact of Denial: [X] Mission Essential / [ ] Health and Safety

SPU Review:	Date:	(vr) Tech Approval:	Date:	Funds Approval:
C. J. EWAN, LCDR	5/3/89	J. Q. GAMBLE, LCDR		

FUNDING: 40-C- - - - - - EST #_____

PART III. SETTLEMENT AGREEMENT (pending mod).

[ ] The contract completion date is extended to _____

[X] The contract completion date is not extended because of this change.

SETTLEMENT PRICE: $ <31,304.00> | CHANGE ORDER # A- 11

J. C. PORTER	5-19-89 4:00PM	
Contracting Officer	Proceed as of Date/Time	Contractor

NWMAR127899

Department of Transportation / U.S. Coast Guard / MLCPAC/vp)-L (8-87)

CHANGE ORDER REQUEST / AUTHORIZATION

Ship	Contract No	Request No	Page 1 of
USCGC POLAR SEA (WAGB 11)	DTCG85-89-B-55136	R-020	2

PART I. REQUEST. The COTR certifies that the work described below must be performed during this availability and requests issuance of a Change Order.

CHANGE ORDER SPECIFICATION CHANGE ITEM# D-17 as changed by R-

TITLE: MAIN STEAM STOP REPAIRS

US COAST GUARD MLC PAC
NAVAL ENGINEERING
PROCUREMENT
1989 MAY 25 A 7:06

Ship's POC: MK1 GREEN/FN REBBEL | Ref OPR: 45

Specifications Prepared by	Date	COTR Approval	Date
R. D. PAGORE, LCDR	5/11/89	J. J. MCCLELLAND, CAPT	12-5-89

PART II. TECHNICAL APPROVAL, P.R. AND STATEMENT OF ESSENTIAL NEED.

1. Description: See Specification in Part I.
2. Primary Need: [ ] GROWTH WORK [ ] NEW WORK
   Add to Basic Item # Add Item #
3. Impact of Denial: [ ] Mission Essential / [ ] Health and Safety

SRD Review:	Date:	(vp) Tech Approval:	Date:	Funds Approval:
D. L. SWAN, LCDR		J. Q. GAMBLE, LCDR		/

FUNDING: 40-D- - - - - - EST #_____

PART III. SETTLEMENT AGREEMENT (pending mod).

[ ] The contract completion date is extended to _____

[X] The contract completion date is not extended because of this change.

SETTLEMENT PRICE: $ 800.00 | CHANGE ORDER # A- 12

J. C. PORTER	5-19-89 4:50 PM	
Contracting Officer	Proceed as of Date/Time	Contractor

NWMAR127900

Department of Transportation // U.S. Coast Guard // MLCPAC/vpl-1 (5-89)

CHANGE ORDER REQUEST / AUTHORIZATION

Ship	Contract No	Request No	Page 1 of
CGC POLAR SEA (WAGB-11)	DTCG85-89-B-55136	R-012	3

PART I. REQUEST. The COTR certifies that the work described below must be performed during this availability and requests issuance of a Change Order.

CHANGE ORDER SPECIFICATION CHANGE ITEM# D-21 as changed by R-012

TITLE: WET LAB CABLE PROBLEMS

Rec'd at NW 5-15-89

US COAST GUARD MLC PAC NAVAL ENGINEERING PROCUREMENT 1989 MAY 25 A 7 06

Ship's POC: EMCM MOSPENS | Ref CFR: 1

Specifications Prepared by: R. A. MOORE, LCDR, USCG | Date: 5/11/89 | COTR Approval: J. J. MCCLELLAND, CAPT, USCG | Date: 12 MAY 89

PART II. TECHNICAL APPROVAL, P.R. AND STATEMENT OF ESSENTIAL NEED.

1. Description: See Specification in Part I.
2. Primary Need: [ ] GROWTH WORK Add to Basic Item # | [ ] NEW WORK Add Item #
3. Impact of Denial: [ ] Mission Essential or [ ] Health and Safety

MLC SRD SEATTLE Review: G. L. SWAN, LCDR | Date: | (vr) Tech Approval: J. Q. GAMBLE, LCDR, USCG | Date: | Funds Approval: /

FUND CITATION: 40-C-1-9-33- - -

ORIG EST $_____

REV EST $_____

PART III. SETTLEMENT AGREEMENT By signature below the parties agree that this settlement is considered fair and reasonable and that it constitutes full and final equitable adjustment for this change. The contractor releases the Government from any liability under this contract for further equitable adjustments attributable to facts & circumstances or impact of this change.

CONTRACTOR MUST CHECK ONE OF THE FOLLOWING:

[ ] The contract completion date is extended to _____

[X] The contract completion date is not extended because of this change.

SETTLEMENT PRICE: $ -0- | CHANGE ORDER # A- 13

J. C. PORTER, Contracting Officer	5-19-89 5810-PM Proceed as of Date/Time	Contractor

NWMAR127901

CHANGE REQUEST / AUTHORIZATION

Ship	Contract No	Request No	Page 1 of
USCGC POLAR SEA(WAGB-11)	DTCG85-89-C-55136	R- 22 A	2

PART I. REQUEST. The COTR certifies that the work described below must be performed during this availability & requests issuance of a Contract Change.

CHANGE SPECIFICATION: Change Item# D-9 as previously changed by R-_____

TITLE: SEA VALVE REPAIRS

SEE ATTACHED

Proceed 15 18:00 17:00 PM

US COAST GUARD MLC PAC
NAVAL ENGINEERING
PROCUREMENT
1989 MAY 25 A 7:06

REFERENCE CFR: 61

[Attach Additional Pages as Necessary]

Specifications Prepared by	Date	COTR Approval	Date
R. D. MOORE, LCDR, USCG	5/17/89	J. J. McCLELLAND, CAPT, USCG	18 May 89

PART II. TECHNICAL APPROVAL, P.R. AND STATEMENT OF ESSENTIAL NEED

1. Description: See Specification in PART I.
2. Primary Need: [X] GROWTH WORK Add to Basic Item # D-9 | [ ] NEW WORK Add Item # _____
3. Impact of Denial: [X] Mission Essential or [ ] Health and Safety

MLC 3RD SEATTLE Review:	Date:	(vr) Tech Approval:	Date:	Funds Appr:
G. L. SWAN, LCDR, USCG	5/17/89	J. A. GAMBLE, LCDR, USCG	5/18/89	

FUND CITATION: ORIG EST $_____

40-C-1-9-33-AL.00.20-75171-2552

REV $_____

PART III. SETTLEMENT AGREEMENT By signature below the parties agree that this settlement is considered fair and reasonable and that it constitutes full and final equitable adjustment for this change. The contractor releases the Government from any liability under this contract for further equitable adjustments attributable to facts & circumstances or impact of this change.

CONTRACTOR MUST CHECK ONE OF THE FOLLOWING:

[ ] The contract completion date is extended to _____

[X] The contract completion date is not extended because of this change.

SETTLEMENT PRICE: $ 10,074 | CHANGE ORDER # A- 14

J. C. PORTER, Contracting Officer	6-20-89 10:00 AM Proceed as of Date/Time	Contractor

NWMAR127902

Department of Transportation // U.S. Coast Guard // MLCPAC/vol-1 (8-87)

CHANGE ORDER REQUEST / AUTHORIZATION

Ship	Contract No	Request No	Page 1 of
USCGC POLAR SEA (WAGB 11)	DTCG85-89-B-55136	R- 016	2

PART I. REQUEST. The COTR certifies that the work described below must be performed during this availability and requests issuance of a Change Order.

CHANGE ORDER SPECIFICATION CHANGE ITEM# D-13 as charged by R- 016

TITLE: COUPLING BOLT/NUT REPAIR

Rcd 5-15-89

US COAST GUARD MLC PAC
NAVAL ENGINEERING
PROCUREMENT
1989 MAY 25 A 7 06

Ship's POC: MKCM DARDONIA/MKC VOLPE Ref CFR: 3

Specifications Prepared by	Date	COTR Approval	Date
R. M. PUDRE, LCDR	5/11/89	J. J. MCCLELLAND, CAPT	12.5.89

PART II. TECHNICAL APPROVAL, P.R. AND STATEMENT OF ESSENTIAL NEED.

1. Description: See Specification in Part I.
2. Primary Need: [ ] GROWTH WORK Add to Basic Item # [ ] NEW WORK Add Item #
3. Impact of Denial: [ ] Mission Essential / [ ] Health and Safety

SRD Review:	Date:	(vr) Tech Approval:	Date:	Funds Approval:
G. L. SWAN, LCDR		J. G. GAMBLE, LCDR		/

FUNDING: 40-2- - - - - - EBT $_____

PART III. SETTLEMENT AGREEMENT (pending mod).

[ ] The contract completion date is extended to _____

[X] The contract completion date is not extended because of this change.

SETTLEMENT PRICE: $ 1086.00 CHANGE ORDER # A- 15

J. C. PORTER	5-20-89 10:15	
Contracting Officer	Proceed as of Date/Time	Contractor

NWMAR127903

Department of Transportation // U.S. Coast Guard // MLCPAC/vpl-1 (5-89)

CHANGE ORDER REQUEST / AUTHORIZATION

Ship	Contract No	Request No	Page 1 of
CGC POLAR SEA (WAGB-11)	DTCG85-89-B-55136	R-021	2

PART I. REQUEST. The COTR certifies that the work described below must be performed during this availability and requests issuance of a Change Order.

CHANGE ORDER SPECIFICATION CHANGE ITEM# D- 21 as changed by R-

TITLE: REVISED FLOOR PLAN OF NEW MAILROOM (02-65-4-C)

Ship's POC: ENS PETERSEN/ENS MORIARTY | Ref CFR:

Specifications Prepared by:	Date:	COTR Approval:	Date:
R. M. FUCRE, LCDR, USCG	5/11/89	J. G. MCCLELLAND, CAPT, USCG	12.5.89

PART II. TECHNICAL APPROVAL, P.R. AND STATEMENT OF ESSENTIAL NEED.

1. Description: See Specification in Part I.
2. Primary Need: [ ] GROWTH WORK Add to Basic Item # | [ ] NEW WORK Add Item #
3. Impact of Denial: [ ] Mission Essential or [ ] Health and Safety

MLC SRD SEATTLE Review:	Date:	(vr) Tech Approval:	Date:	Funds Approval:
G. L. SWAN, LCDR		J. G. GAMBLE, LCDR, USCG		/

FUND CITATION:
40-C-1-9-33-

ORIG EST $_____

REV EST $_____

PART III. SETTLEMENT AGREEMENT By signature below the parties agree that this settlement is considered fair and reasonable and that it constitutes full and final equitable adjustment for this change. The contractor releases the Government from any liability under this contract for further equitable adjustments attributable to facts & circumstances or impact of this change.

CONTRACTOR MUST CHECK ONE OF THE FOLLOWING:

[ ] The contract completion date is extended to _____

[X] The contract completion date is not extended because of this change.

SETTLEMENT PRICE: $ 368.00 | CHANGE ORDER # A- 16

J. C. PORTER, Contracting Officer	5-22-89 4:00PM Proceed as of Date/Time	Contractor

NWMAR127904

AMENDMENT OF SOLICITATION/MODIFICATION OF CONTRACT

1. CONTRACT ID CODE	PAGE OF PAGES
	1 | 1

2. AMENDMENT/MODIFICATION NO.	3. EFFECTIVE DATE	4. REQUISITION/PURCHASE REQ. NO.	5. PROJECT NO. (If applicable)
00005	26 MAY 1989		CGC POLAR SEA

6. ISSUED BY CODE DTCG85

Commander (vpl)
Maintenance and Logistic Command Pacific
Coast Guard Island, Bldg. 50-7
Alameda, CA 94501-5100

7. ADMINISTERED BY (If other than Item 6) CODE

8. NAME AND ADDRESS OF CONTRACTOR (No., street, county, State and ZIP Code)

Northwest Marine Iron Works
5555 N. Channel, Bldg.2
Portland, OR 97217 (503)285-7557

CODE FACILITY CODE

(✓) 9A. AMENDMENT OF SOLICITATION NO.

9B. DATED (SEE ITEM 11)

X 10A. MODIFICATION OF CONTRACT/ORDER NO. DTCG85-89-C-55136

10B. DATED (SEE ITEM 13) 22 March 1989

11. THIS ITEM ONLY APPLIES TO AMENDMENTS OF SOLICITATIONS

☐ The above numbered solicitation is amended as set forth in Item 14. The hour and date specified for receipt of Offers ☐ is extended, ☐ is not extended.

Offers must acknowledge receipt of this amendment prior to the hour and date specified in the solicitation or as amended, by one of the following methods:

(a) By completing Items 8 and 15, and returning _____ copies of the amendment; (b) By acknowledging receipt of this amendment on each copy of the offer submitted; or (c) By separate letter or telegram which includes a reference to the solicitation and amendment numbers. FAILURE OF YOUR ACKNOWLEDGMENT TO BE RECEIVED AT THE PLACE DESIGNATED FOR THE RECEIPT OF OFFERS PRIOR TO THE HOUR AND DATE SPECIFIED MAY RESULT IN REJECTION OF YOUR OFFER. If by virtue of this amendment you desire to change an offer already submitted, such change may be made by telegram or letter, provided each telegram or letter makes reference to the solicitation and this amendment, and is received prior to the opening hour and date specified.

12. ACCOUNTING AND APPROPRIATION DATA (If required)
40 C 1 9 33 45.00.20 75171 2552 Increase: $7,396.00 New Total: $2,060,430.00

13. THIS ITEM APPLIES ONLY TO MODIFICATIONS OF CONTRACTS/ORDERS, IT MODIFIES THE CONTRACT/ORDER NO. AS DESCRIBED IN ITEM 14.

(✓)

A. THIS CHANGE ORDER IS ISSUED PURSUANT TO: (Specify authority) THE CHANGES SET FORTH IN ITEM 14 ARE MADE IN THE CONTRACT ORDER NO. IN ITEM 10A.

B. THE ABOVE NUMBERED CONTRACT/ORDER IS MODIFIED TO REFLECT THE ADMINISTRATIVE CHANGES (such as changes in paying office, appropriation date, etc.) SET FORTH IN ITEM 14, PURSUANT TO THE AUTHORITY OF FAR 43.103(b).

X C. THIS SUPPLEMENTAL AGREEMENT IS ENTERED INTO PURSUANT TO AUTHORITY OF:
Bilateral Agreement as set forth on the attached Change Request/Authorization Forms.

D. OTHER (Specify type of modification and authority)

E. IMPORTANT: Contractor X ☐ is not, ☐ is required to sign this document and return _____ copies to the issuing office.

14. DESCRIPTION OF AMENDMENT/MODIFICATION (Organized by UCF section headings, including solicitation/contract subject matter where feasible.)

A. Incorporate the following changes at the prices stated below and as described on the attached Change Request/Authorization Forms.

Agreement #	Request #	Basic Item #	Amount
A-21	R-27	D-22	$1,294.00
A-24	R-46	D-09	$6,102.00
		TOTAL:	$7,396.00

Except as provided herein, all terms and conditions of the document referenced in Item 9A or 10A, as heretofore changed, remains unchanged and in full force and effect.

15A. NAME AND TITLE OF SIGNER (Type or print)		16A. NAME AND TITLE OF CONTRACTING OFFICER (Type or print)	
		JOHN C. PORTER	
15B. CONTRACTOR/OFFEROR	15C. DATE SIGNED	16B. UNITED STATES OF AMERICA	16C. DATE SIGNED
(Signature of person authorized to sign)		BY (Signature of Contracting Officer)	6/6/89

NSN 7540-01-152-8070
PREVIOUS EDITION UNUSABLE

30-105

STANDARD FORM 30 (REV. 10-83)
Prescribed by GSA
FAR (48 CFR) 53.243

NWMAR127905

INSTRUCTIONS

Instructions for items other than those that are self-explanatory, are as follows:

(a) Item 1 (Contract ID Code). Insert the contract type identification code that appears in the title block of the contract being modified.

(b) Item 3 (Effective date).

(1) For a solicitation amendment, change order, or administrative change, the effective date shall be the issue date of the amendment, change order, or administrative change.

(2) For a supplemental agreement, the effective date shall be the date agreed to by the contracting parties.

(3) For a modification issued as an initial or confirming notice of termination for the convenience of the Government, the effective date and the modification number of the confirming notice shall be the same as the effective date and modification number of the initial notice.

(4) For a modification converting a termination for default to a termination for the convenience of the Government, the effective date shall be the same as the effective date of the termination for default.

(5) For a modification confirming the contracting officer's determination of the amount due in settlement of a contract termination, the effective date shall be the same as the effective date of the initial decision.

(c) Item 6 (Issued By). Insert the name and address of the issuing office. If applicable, insert the appropriate issuing office code in the code block.

(d) Item 8 (Name and Address of Contractor). For modifications to a contract or order, enter the contractor's name, address, and code as shown in the original contract or order, unless changed by this or a previous modification.

(e) Items 9, (Amendment of Solicitation No.—Dated), and 10, (Modification of Contract/Order No.—Dated). Check the appropriate box and in the corresponding blanks insert the number and date of the original solicitation, contract, or order.

(f) Item 12 (Accounting and Appropriation Data). When appropriate, indicate the impact of the modification on each affected accounting classification by inserting one of the following entries:

(1) Accounting classification .....
Net increase $ .....

(2) Accounting classification .....
Net decrease $ .....

NOTE: If there are changes to multiple accounting classifications that cannot be placed in block 12, insert an asterisk and the words "See continuation sheet".

(g) Item 13. Check the appropriate box to indicate the type of modification. Insert in the corresponding blank the authority under which the modification is issued. Check whether or not contractor must sign this document. (See FAR 43.103.)

(h) Item 14 (Description of Amendment/Modification).

(1) Organize amendments or modifications under the appropriate Uniform Contract Format (UCF) section headings from the applicable solicitation or contract. The UCF table of contents, however, shall not be set forth in this document.

(2) Indicate the impact of the modification on the overall total contract price by inserting one of the following entries:

(i) Total contract price increased by $ .....

(ii) Total contract price decreased by $ .....

(iii) Total contract price unchanged.

(3) State reason for modification.

(4) When removing, reinstating, or adding funds, identify the contract items and accounting classifications.

(5) When the SF 30 is used to reflect a determination by the contracting officer of the amount due in settlement of a contract terminated for the convenience of the Government, the entry in Item 14 of the modification may be limited to —

(i) A reference to the letter determination; and

(ii) A statement of the net amount determined to be due in settlement of the contract.

(6) Include subject matter or short title of solicitation/contract where feasible.

(i) Item 16B. The contracting officer's signature is not required on solicitation amendments. The contracting officer's signature is normally affixed last on supplemental agreements.

☆U.S. Government Printing Office: 1989—201-760/80089

NWMAR127906

CHAN E REQUEST / AUTH IZATION

Ship	Contract No	Request No	Page 1 of
USCGC POLAR SEA (WAGB-11)	DTCG85-89-C-55136	R-027	2

PART I. REQUEST. The COTR certifies that the work described below must be performed during this availability & requests issuance of a Contract Change.

CHANGE SPECIFICATION: Change Item# D-22 as previously changed by R-_____

TITLE: UNCONT SEA WATER SUPPLY CLARIFICATIONS

CONTRACTOR SHALL PROVIDE ALL FACILITIES, LABOR, EQUIPMENT AND MATERIALS

TO ACCOMPLISH THE FOLLOWING:

1. MAKE CHANGES TO CONTRACTOR FURNISHED DWG 400 WAGB 0101-304 AS FOLLOWS:

A. SHT 1 OF 2: CHANGE BILL OF MATERIALS ITEM 16 FROM 2-1/2" SCH 80 ASTM A53 GR A. GALV STEEL PIPE TO 2" SCH 80 ASTM A-106 GRADE B.

REFERENCE CFR: NONE PHONCON LTJG HAYCOCK (USCG), DON STEVENS (NWMI) CFR 83

US COAST GUARD MLC PAC NAVAL ENGINEERING PROCUREMENT 1989 JUN -2 PM 2:13

[Attach Additional Pages as Necessary]

Specifications Prepared by	Date	COTR Approval	Date
R. D. POORE, LCDR, USCG	5/19	J. D. MCCLELLAND, CAPT, USCG	19 MAY 89

PART II. TECHNICAL APPROVAL, P.R. AND STATEMENT OF ESSENTIAL NEED

1. Description: See Specification in PART I.
2. Primary Need: [X] GROWTH WORK Add to Basic Item # _____ | [ ] NEW WORK Add Item # _____
3. Impact of Denial: [X] Mission Essential or [ ] Health and Safety

MLC SRD SEATTLE Review:	Date:	(vr) Tech Approval:	Date:	Funds Appr:
G. L. SWAN, LCDR, USCG	5/19/89	J. Q. GAMBLE, LCDR, USCG		

FUND CITATION: ORIG EST $0.00

40-C-1-9-33-45.00.20-75171-2552

REV $_____

PART III. SETTLEMENT AGREEMENT By signature below the parties agree that this settlement is considered fair and reasonable and that it constitutes full and final equitable adjustment for this change. The contractor releases the Government from any liability under this contract for further equitable adjustments attributable to facts & circumstances or impact of this change.

CONTRACTOR MUST CHECK ONE OF THE FOLLOWING:

[ ] The contract completion date is extended to _____

[X] The contract completion date is not extended because of this change.

SETTLEMENT PRICE: $ 1294.00 | **CHANGE ORDER #** A- 21

J. C. PORTER	5-26-89 11:30 AM	
Contracting Officer	Proceed as of Date/Time	Contractor

R.D. - 5-23-89

Department of Transportation // U.S. Coast Guard // MLCPAC/vpl-1 (5-89)

CHANGE ORDER REQUEST / AUTHORIZATION

Ship	Contract No	Request No	Page 1 of
CGC POLAR SEA (WAGB-11)	DTCG85-89-B-55136	R-046	2

PART I. REQUEST. The COTR certifies that the work described below must be performed during this availability and requests issuance of a Change Order.

CHANGE ORDER SPECIFICATION CHANGE ITEM# D-09 as changed by R-046

TITLE: ADDITIONAL SKIN VALVE INSPECTIONS

US COAST GUARD MLC PAC
NAVAL ENGINEERING
PROCUREMENT
1989 JUN -2 P 2:03

Ship's POC: MK1 CROCKETT/MK2 BARNETT | Ref CFR: N/A

Specifications Prepared by:	Date:	COTR Approval:	Date:
K. D. MOORE, LCDR, USCG	5/23/89	J. J. MCCLELLAND, CAPT, USCG	24.5.89

PART II. TECHNICAL APPROVAL, P.R. AND STATEMENT OF ESSENTIAL NEED.

1. Description: See Specification in Part I.
2. Primary Need: [X] GROWTH WORK Add to Basic Item # D-09 | [ ] NEW WORK Add Item #
3. Impact of Denial: [X] Mission Essential or [ ] Health and Safety

MLC PAC SEATTLE Review:	Date:	(vr) Tech Approval:	Date:	Funds Approval:
C. L. EWAN, LCDR	5/25/89	J. G. GAMBLE, LCDR, USCG		

FUND CITATION: 40-2-1-7-38- ORIG EST $_____

REV EST $_____

PART III. SETTLEMENT AGREEMENT By signature below the parties agree that this settlement is considered fair and reasonable and that it constitutes full and final equitable adjustment for this change. The contractor releases the Government from any liability under this contract for further equitable adjustments attributable to facts & circumstances or impact of this change.

CONTRACTOR MUST CHECK ONE OF THE FOLLOWING:

[ ] The contract completion date is extended to _____

[ ] The contract completion date is not extended because of this change.

SETTLEMENT PRICE: $ 6102.00 | CHANGE ORDER # A- 24

J. C. PORTER, Contracting Officer	5-26-89 5:45 pm, Proceed as of Date/Time	Contractor

NWMAR127908

AMENDMENT OF SOLICITATION/MODIFICATION OF CONTRACT

2. AMENDMENT/MODIFICATION NO.	3. EFFECTIVE DATE	4. REQUISITION/PURCHASE REQ. NO.	5. PROJECT NO. (If applicable)
00006	01 JUNE 1989		CGC POLAR SEA

6. ISSUED BY CODE DTCG85

Commander (vpl)
Maintenance and Logistic Command Pacific
Coast Guard Island, Bldg. 50-7
Alameda, CA 94501-5100

7. ADMINISTERED BY (If other than Item 6) CODE

8. NAME AND ADDRESS OF CONTRACTOR (No., street, county, State and ZIP Code)

Northwest Marine Iron Works
5555 N. Channel, Bldg.2
Portland, OR 97217 (503) 285-7557

CODE FACILITY CODE

9A. AMENDMENT OF SOLICITATION NO.

9B. DATED (SEE ITEM 11)

10A. MODIFICATION OF CONTRACT/ORDER NO. DTCG85-89-C-55136

X 10B. DATED (SEE ITEM 13) 22 March 1989

11. THIS ITEM ONLY APPLIES TO AMENDMENTS OF SOLICITATIONS

☐ The above numbered solicitation is amended as set forth in Item 14. The hour and date specified for receipt of Offers ☐ is extended, ☐ is not extended.

Offers must acknowledge receipt of this amendment prior to the hour and date specified in the solicitation or as amended, by one of the following methods:

(a) By completing Items 8 and 15, and returning _____ copies of the amendment; (b) By acknowledging receipt of this amendment on each copy of the offer submitted; or (c) By separate letter or telegram which includes a reference to the solicitation and amendment numbers. FAILURE OF YOUR ACKNOWLEDGMENT TO BE RECEIVED AT THE PLACE DESIGNATED FOR THE RECEIPT OF OFFERS PRIOR TO THE HOUR AND DATE SPECIFIED MAY RESULT IN REJECTION OF YOUR OFFER. If by virtue of this amendment you desire to change an offer already submitted, such change may be made by telegram or letter, provided each telegram or letter makes reference to the solicitation and this amendment, and is received prior to the opening hour and date specified.

12. ACCOUNTING AND APPROPRIATION DATA (If required) Increase: $35,685.00 New Total: $2,096,115.00

13. THIS ITEM APPLIES ONLY TO MODIFICATIONS OF CONTRACTS/ORDERS, IT MODIFIES THE CONTRACT/ORDER NO. AS DESCRIBED IN ITEM 14.

(✓) A. THIS CHANGE ORDER IS ISSUED PURSUANT TO: (Specify authority) THE CHANGES SET FORTH IN ITEM 14 ARE MADE IN THE CONTRACT ORDER NO. IN ITEM 10A.

B. THE ABOVE NUMBERED CONTRACT/ORDER IS MODIFIED TO REFLECT THE ADMINISTRATIVE CHANGES (such as changes in paying office, appropriation data, etc.) SET FORTH IN ITEM 14, PURSUANT TO THE AUTHORITY OF FAR 43.103(b).

C. THIS SUPPLEMENTAL AGREEMENT IS ENTERED INTO PURSUANT TO AUTHORITY OF:

X Bilateral Agreement as set forth on the attached Change Request/Authorization Forms.

D. OTHER (Specify type of modification and authority)

E. IMPORTANT: Contractor ☒ is not, ☐ is required to sign this document and return _____ copies to the issuing office.

14. DESCRIPTION OF AMENDMENT/MODIFICATION (Organized by UCF section headings, including solicitation/contract subject matter where feasible.)

SEE ATTACHED.

Except as provided herein, all terms and conditions of the document referenced in Item 9A or 10A, as heretofore changed, remains unchanged and in full force and effect.

15A. NAME AND TITLE OF SIGNER (Type or print)		16A. NAME AND TITLE OF CONTRACTING OFFICER (Type or print)	
		JOHN E. PORTER	
15B. CONTRACTOR/OFFEROR	15C. DATE SIGNED	16B. UNITED STATES OF AMERICA	16C. DATE SIGNED
(Signature of person authorized to sign)		BY (Signature of Contracting Officer)	6/8/89

DRYDOCKING AND REPAIRS TO USCGC POLAR SEA (WAGB 11)

A. Incorporate the following changes at the prices stated below and as described on the attached Change Request/Authorization forms.

Agreement #	Request #	Basic Item #	AMOUNT
A-25	R-032	D-17	$1,325.00
A-26	R-048	D-11	$679.00
A-27	R-045	D-11	$679.00
A-29	R-040	D-26	$405.00
A-30	R-029	D-25	$14,731.00
A-31	R-031	D-29	$1,164.00
A-32	R-042	D-12	$3,393.00
A-33	R-003	New	$6,055.00
A-34	R-023	D-05	964.00
A-35	R-028	D-10	$3,547.00
A-36	R-036	D-29	$2,743.00
		TOTAL	$35,685.00

B. These Accounting Data applies:

40 C 1 9 33 45.00.20 75171 2561	$7,454.00
40 C 1 9 33 45.00.20 75171 2552	$11,770.00
40 C 1 9 33 45.00.20 75171 2525	$16,461.00

Department of Transportation // U.S. Coast Guard // MLCPAC(vp)-1 (5-89)

CHANGE ORDER REQUEST / AUTHORIZATION

Ship	Contract No	Request No	Page 1 of
CGC POLAR SEA (WAGB-11)	DTCG85-89-B-55134	R- 032	2

PART I. REQUEST. The COTR certifies that the work described below must be performed during this availability and requests issuance of a Change Order.

CHANGE ORDER SPECIFICATION CHANGE ITEM# D-17 as changed by R-032

TITLE: STEAM VALVE REPAIRS I-170A

THE CONTRACTOR SHALL PROVIDE ALL LABOR AND MATERIALS TO ACCOMPLISH THE ATTACHED.

Ship's POC: MKC ROWLAND /MK1 GREEN Ref CFR: 57/63

Specifications Prepared by:	Date:	COTR Approval:	Date:
R. L. MOORE, LCDR, USCG FOR	16MAY89	J. J. MCCLELLAND, CAPT. USCG	7.5.89

PART II. TECHNICAL APPROVAL, P.R. AND STATEMENT OF ESSENTIAL NEED.

1. Description: See Specification in Part I.
2. Primary Need: [X] GROWTH WORK [ ] NEW WORK
   Add to Basic Item # D-17 Add Item #
3. Impact of Denial: [X] Mission Essential or [ ] Health and Safety

MLC PRE SEATTLE Review:	Date:	(vp) Tech Approval:	Date:	Funds Approval:
G. A. SWAN, LCDR	5/24/89	J. G. GAMBLE, LCDR, USCG		/

FUND CITATION: 40-C-1-9-33- - -

ORIG EST $_____

REV EST $_____

PART III. SETTLEMENT AGREEMENT By signature below the parties agree that this settlement is considered fair and reasonable and that it constitutes full and final equitable adjustment for this change. The contractor releases the Government from any liability under this contract for further equitable adjustments attributable to facts & circumstances or impact of this change.

CONTRACTOR MUST CHECK ONE OF THE FOLLOWING:

[ ] The contract completion date is extended to _____

[X] The contract completion date is not extended because of this change.

SETTLEMENT PRICE: $ 1375.00 CHANGE ORDER # A- 25

J. C. PORTER Contracting Officer	5-30-89 11:00 AM Proceed as of Date/Time	Contractor

Department of Transportation // U.S. Coast Guard // MLCPAC/vp1-1 (8-87)

CHANGE ORDER REQUEST / AUTHORIZATION

Ship	Contract No	Request No	Page 1 of
USCGC POLAR SEA (WAGB 11)	DTCG89-89-B-55136	R-048	2

PART I. REQUEST. The COTR certifies that the work described below must be performed during this availability and requests issuance of a Change Order.

CHANGE ORDER SPECIFICATION CHANGE ITEM# D-11 as changed by R-

TITLE: SEA STRAINER TORQUE BAR #2

110B

Ship's POC: MKC VOLPE/MKI CROCKETT | Ref CFR: 1825

Specifications Prepared by	Date	COTR Approval	Date
R. H. FOOSE, LCDR	5/25/89	J. J. MCCLELLAND, LCDR	25 May 89

PART II. TECHNICAL APPROVAL, P.R. AND STATEMENT OF ESSENTIAL NEED.

1. Description: See Specification in Part I.
2. Primary Need: [X] GROWTH WORK Add to Basic Item # D-11 / [ ] NEW WORK Add Item #
3. Impact of Denial: [X] Mission Essential / [ ] Health and Safety

SRP Review	Date:	(vp) Tech Approval:	Date:	Funds Approval:
G. L. SHAW, LCDR	5/26/89	T. G. GAMBLE, LCDR		

FUNDING: 40-C- - - - - - EST #_____

PART III. SETTLEMENT AGREEMENT (pending mod).

[ ] The contract completion date is extended to _____

[X] The contract completion date is not extended because of this change.

SETTLEMENT PRICE: $ 679.00 | CHANGE ORDER # A- 26

J. G. PORTER, Contracting Officer	5-30-89 11:05 Am Proceed as of Date/Time	Contractor

Department of Transportation // U.S. Coast Guard // MLCPAC/vp1-1 (8-87)

CHANGE ORDER REQUEST / AUTHORIZATION

Ship	Contract No	Request No	Page 1 of
USCGC POLAR SEA (WAGB 11)	DTCG85-89-B-55136	R-045	2

PART I. REQUEST. The COTR certifies that the work described below must be performed during this availability and requests issuance of a Change Order.

CHANGE ORDER SPECIFICATION CHANGE ITEM# D-11 as changed by R-

TITLE: SEA STRAINER TORQUE BAR 110B

Ship's POC: MKC VOLPE/MK1 CROCKETT | Ref CFR: 102

Specifications Prepared by	Date	COTR Approval	Date
R. D. FOOKE, LCDR	5/22/89	J. T. MCCLELLAND, CAPT	5/22/89

PART II. TECHNICAL APPROVAL, P.R. AND STATEMENT OF ESSENTIAL NEED.

1. Description: See Specification in Part I.
2. Primary Need: [X] GROWTH WORK [ ] NEW WORK
   Add to Basic Item # D-11 / Add Item #
3. Impact of Denial: [X] Mission Essential / [X] Health and Safety

SRB Review:	Date:	(vr) Tech Approval:	Date:	Funds Approval:
G. [illegible] SWAN, LCDR	5/24/89	J. G. GAMBLE, LCDR		/

FUNDING: 40-C- - - - - - EST $_____

PART III. SETTLEMENT AGREEMENT (pending mod).

[ ] The contract completion date is extended to _____

[X] The contract completion date is not extended because of this change.

SETTLEMENT PRICE: $ 679.00 | CHANGE ORDER # A- 27

J. C. PORTER	5-30-89 11:10 Am	
Contracting Officer	Proceed as of Date/Time	Contractor

Department of Transportation // U.S. Coast Guard // MLCPAC/vpl-1 (5-89)

CHANGE ORDER REQUEST / AUTHORIZATION

Ship	Contract No	Request No	Page 1 of
CGC POLAR SEA (WAGB-11)	DTCG85-89-B-55136	R-040	2

PART I. REQUEST. The COTR certifies that the work described below must be performed during this availability and requests issuance of a Change Order.

CHANGE ORDER SPECIFICATION CHANGE ITEM# D- 026 as changed by R-040

TITLE: FUEL TANK PIPE BRACKET WELDING

Ship's POC: ENS WOOD/ MK1 KITCHEN | Ref CFR: 0

Specifications Prepared by: | Date: | COTR Approval: | Date:
R. D. MOORE, LCDR, USCG | 5/22/89 | J. T. MCCLELLAND, CAPT, USCG | 5/23/89

PART II. TECHNICAL APPROVAL- P.R. AND STATEMENT OF ESSENTIAL NEED.
1. Description: See Specification in Part I.
2. Primary Need: [X] GROWTH WORK | [ ] NEW WORK
Add to Basic Item # D-26 | Add Item #
3. Impact of Denial: [ ] Mission Essential or [ ] Health and Safety

MLC 3RD SEATTLE Review: | Date: | (yr) Tech Approval: | Date: | Funds Approval:
G. L. SWAN, LCDR | 5/24/89 | J. G. GAMBLE, LCDR, USCG | /

FUND CITATION:
40-C-1-9-33-

ORIG EST $_____

REV EST $_____

PART III. SETTLEMENT AGREEMENT By signature below the parties agree that this settlement is considered fair and reasonable and that it constitutes full and final equitable adjustment for this change. The contractor release the Government from any liability under this contract for further equitable adjustments attributable to facts & circumstances or impact of this change.

CONTRACTOR MUST CHECK ONE OF THE FOLLOWING:
[ ] The contract completion date is extended to _____
[X] The contract completion date is not extended because of this change.

SETTLEMENT PRICE: $ 409.00 | CHANGE ORDER # A- 29

J. C. PORTER, Contracting Officer | 6-1-89 5:38 PM Proceed as of Date/Time | Contractor

Department of Transportation // U.S. Coast Guard // MLCPAC/vpl-1 (5-89)

CHANGE ORDER REQUEST / AUTHORIZATION

Ship	Contract No	Request No	Page 1 of
CGC POLAR SEA (WAGB-11)	DTCG85-89-B-55136	R-029	2

PART I. REQUEST. The COTR certifies that the work described below must be performed during this availability and requests issuance of a Change Order.

CHANGE ORDER SPECIFICATION CHANGE ITEM# D-25 as changed by R-029

TITLE: 3-223-1-W F/W TANK RECOATING

CONDITIONS EXISTING: AS PER CFR 60 DTD 11MAY89.

SCOPE OF WORK: CONTRACTOR TO PROVIDE ALL LABOR & MATERIALS TO SANDBLAST TO NEAR WHITE METAL (SSPC SP10) 100 PERCENT OF F/W TANK 3-223-1-W (APPROXIMATELY 3000 SQ. FT.). REMAINING PROVISIONS OF BASIC ITEM APPLY.

Ship's POC: CWO R. E. GARMAN | Ref CFR: 60

Specifications Prepared by:	Date:	COTR Approval:	Date:
R. E. Garman R. E GARMAN, CWO, USCG	19MAY89	J. J. MCCLELLAND, CAPT, USCG	5/22/89

PART II. TECHNICAL APPROVAL, P.R. AND STATEMENT OF ESSENTIAL NEED.

1. Description: See Specification in Part I.
2. Primary Need: [X] GROWTH WORK Add to Basic Item # D-25 | [ ] NEW WORK Add Item #
3. Impact of Denial: [X] Mission Essential or [ ] Health and Safety

MLC SRD SEATTLE Review:	Date:	(vr) Tech Approval:	Date:	Funds Approval:
C. L. SWAN, LCDR	5/25/89	J. Q. GAMBLE, LCDR, USCG		

FUND CITATION: 40-C-1-9-33- - -

ORIG EST $

REV EST $

PART III. SETTLEMENT AGREEMENT By signature below the parties agree that this settlement is considered fair and reasonable and that it constitutes full and final equitable adjustment for this change. The contractor releases the Government from any liability under this contract for further equitable adjustments attributable to facts & circumstances or impact of this change.

CONTRACTOR MUST CHECK ONE OF THE FOLLOWING:

[ ] The contract completion date is extended to

[X] The contract completion date is not extended because of this change.

SETTLEMENT PRICE: $ 14,731.00 | CHANGE ORDER # A- 30

J. C. PORTER Contracting Officer	6-1-89 11:45 Am Proceed as of Date/Time	Contractor

Department of Transportation // U.S. Coast Guard // MLCPAC/vpl-1 (5-89)

CHANGE ORDER REQUEST / AUTHORIZATION

Ship	Contract No	Request No	Page 1 of
CGC POLAR SEA (WAGB-11)	DTCG85-89-B-55136	R-031	1

PART I. REQUEST. The COTR certifies that the work described below must be performed during this availability and requests issuance of a Change Order.

CHANGE ORDER SPECIFICATION CHANGE ITEM# D-29 as changed by R-031

TITLE: DEEP FAT FRYER DISCONNECT SWITCH

(1) Mount deep fat fryer disconnect switch in passageway 01-49-0-L, in raceway, on port bulkhead, approximately frame 56, center of switch to be approximately 66" above the deck, in lieu of location designated on drawing D-29-E, sheet 1, note 8. Use a 16" X 14" strongback plate with 4 welded mounting studs to support the disconnect switch box.

(2) ~~Replace~~ Revise electrical cable (1-69-1)-4P-E(2)(D4) between existing 440/220 volt transformer and deep fat fryer disconnect switch in lieu of removal AS SHOWN

(3) Change electrical cable length on circuit (1-69-1)-4P-E(1)(D4) shown on drawing D-29-E sheet 3 from 50' to 120'.

Ship's POC: EMCM MOSPENE | Ref CFR: 46

Specifications Prepared by:	Date:	COTR Approval:	Date:
R. J. MOORE, LCDR, USCG	5/22/89	J. M. MCCLELLAND, CAPT, USCG	5/22/89

PART II. TECHNICAL APPROVAL, F.R. AND STATEMENT OF ESSENTIAL NEED.

1. Description: See Specification in Part I.
2. Primary Need: [X] GROWTH WORK Add to Basic Item # [ ] NEW WORK Add Item #
3. Impact of Denial: [X] Mission Essential or [ ] Health and Safety

MLC SRD ~~REAT~~ Review:	Date:	(vr) Tech Approval:	Date:	Funds Approval:
G. L. SWAN, LCDR	6/21/89	J. G. GAMBLE, LCDR, USCG		/

FUND CITATION: 40-D-1-9-33- - -

ORIG EST $ [redacted]

REV EST $ [redacted]

PART III. SETTLEMENT AGREEMENT By signature below the parties agree that this settlement is considered fair and reasonable and that it constitutes full and final equitable adjustment for this change. The contractor releases the Government from any liability under this contract for further equitable adjustments attributable to facts & circumstances or impact of this change.

CONTRACTOR MUST CHECK ONE OF THE FOLLOWING:

[ ] The contract completion date is extended to _____

[X] The contract completion date is not extended because of this change.

SETTLEMENT PRICE: $ 1164.00 | CHANGE ORDER # A- 31

J. C. PORTER, Contracting Officer	6-2-89 9:10am Proceed as of Date/Time	Contractor

CHANGE REQUEST / AUTHORIZATION

Ship	Contract No	Request No	Page 1 of
USCGC POLAR SEA (WAGB-11)	DTCG85-89-C-55136	R-042	2

PART I. REQUEST. The COTR certifies that the work described below must be performed during this availability & requests issuance of a Contract Change.

CHANGE SPECIFICATION: Change Item# D-12 as previously changed by R-_____

TITLE: RENEW RUDDER STOCK COVERING 120B

1. Conditions existing: rubber rudder stock covering has separated from the rudder stock. Contractor had to cut portions of it to permit removal of stock from ship.

2. Scope: contractor shall provide all labor, equipment and materials to renew the old rubber covering using fiberglass as described on page 2.

REFERENCE CFR: 096

[Attach Additional Pages as Necessary]

Specifications Prepared by	Date	COTR Approval	Date
R. D. POORE, LCDR, USCG	5/23/89	J. J. MACLELLAND, CAPT, USCG	25.5.89

PART II. TECHNICAL APPROVAL, P.R. AND STATEMENT OF ESSENTIAL NEED

1. Description: See Specification in PART I.
2. Primary Need: [XX] GROWTH WORK Add to Basic Item # D-12 | [ ] NEW WORK Add Item # _____
3. Impact of Denial: [XX] Mission Essential or [ ] Health and Safety

MLC 3RD SEATTLE Review:	Date:	(vr) Tech Approval:	Date:	Funds Appr:
G. L. SWAN, LCDR, USCG	5/24/89	J. Q. GAMBLE, LCDR, USCG		

FUND CITATION: 40-C-1-9-33-_ _-_ _-_ _-75171-_ _ _ _ ORIG EST $_____

REV $_____

PART III. SETTLEMENT AGREEMENT By signature below the parties agree that this settlement is considered fair and reasonable and that it constitutes full and final equitable adjustment for this change. The contractor releases the Government from any liability under this contract for further equitable adjustments attributable to facts & circumstances or impact of this change.

CONTRACTOR MUST CHECK ONE OF THE FOLLOWING:

[ ] The contract completion date is extended to _____

[X] The contract completion date is not extended because of this change.

SETTLEMENT PRICE: $ 3393.00 | CHANGE ORDER # R- 32

J. Q. PORTER, Contracting Officer	6-2-89 11:30 Am, Proceed as of Date/Time	Contractor

Department of Transportation // U.S. Coast Guard // MLCPAC/Vpl-1 (5-89)

CHANGE ORDER REQUEST / AUTHORIZATION

Ship	Contract No	Request No	Page 1 of
CGC POLAR SEA (WAGB-11)	DTCG85-89-B-55136	R-003	1

PART I. REQUEST. The COTR certifies that the work described below must be performed during this availability and requests issuance of a Change Order.

CHANGE ORDER SPECIFICATION ~~CHANGE ITEM# D- as changed by R-~~

TITLE: INSTALL DOPPLER SPEED LOG HULL PENETRATION

1. Contractor shall supply all labor, equipment and materials except as noted to install the doppler speed log hull penetration, gate valve and blank flange in accordance with the attached specification.

Ship's POC: LCDR POORE | Ref CFR: NONE

Specifications Prepared by:	Date:	COTR Approval:	Date:
R. D. POORE, LCDR, USCG	5/23/89	J.J. MCCLELLAND, CAPT, USCG	23.5.89

PART II. TECHNICAL APPROVAL, P.R. AND STATEMENT OF ESSENTIAL NEED.

1. Description: See Specification in Part I.
2. Primary Need: [ ] GROWTH WORK Add to Basic Item #_____ | [XX] NEW WORK Add Item #_____
3. Impact of Denial: [ ] Mission Essential or [XX] Health and Safety

MLC 3RD SEATTLE Review:	Date:	(vr) Tech Approval:	Date:	Funds Approved
G. W. SWAN, LCDR	5/24/89	J. Q. GAMBLE, LCDR, USCG		

FUND CITATION: 40-C-1-9-33- - -

ORIG EST $_____

REV EST $_____

PART III. SETTLEMENT AGREEMENT By signature below the parties agree that this settlement is considered fair and reasonable and that it constitutes full and final equitable adjustment for this change. The contractor releases the Government from any liability under this contract for further equitable adjustments attributable to facts & circumstances or impact of this change.

CONTRACTOR MUST CHECK ONE OF THE FOLLOWING:

[ ] The contract completion date is extended to _____

[✓] The contract completion date is not extended because of this change.

SETTLEMENT PRICE: $ 6055.00 | CHANGE ORDER # A- 33

J. C. FORTER	6-2-89 1200 HRS	
Contracting Officer	Proceed as of Date/Time	Contractor

NWMAR127918

TK

Department of Transportation // U.S. Coast Guard // MLCPAC/vpl-1 (5-89)

CHANGE ORDER REQUEST / AUTHORIZATION

Ship	Contract No	Request No	Page 1 of
CGC POLAR SEA (WAGB-11)	DTCG85-89-B-55136	R-023	2

PART I. REQUEST. The COTR certifies that the work described below must be performed during this availability and requests issuance of a Change Order.

CHANGE ORDER SPECIFICATION CHANGE ITEM# D-05 as changed by R- 023

TITLE: FABRICATION OF HULL ZINC FAIRING PIECES

Ship's POC: ENS WOOD/ DCC STEWART | Ref CFR: 33

Specifications Prepared by:	Date:	COTR Approval:	Date:
D. MOORE, ~~LCDR~~, USCG	5/24/89	J. J. MCCLELLAND, CAPT, USCG	24-5-89

PART II. TECHNICAL APPROVAL, P.R. AND STATEMENT OF ESSENTIAL NEED.

1. Description: See Specification in Part I.
2. Primary Need: [X] GROWTH WORK [ ] NEW WORK
   Add to Basic Item # D-05 Add Item #
3. Impact of Denial: [X] Mission Essential or [ ] Health and Safety

MLC SRD SEATTLE Review:	Date:	(vr) Tech Approval:	Date:	Funds Approval:
G. L. SHAW, LCDR	5/25/89	J. Q. GAMBLE, LCDR, USCG		/

FUND CITATION:
40-C-1-9-33- - -

ORIG EST $_____

REV EST $_____

PART III. SETTLEMENT AGREEMENT By signature below the parties agree that this settlement is considered fair and reasonable and that it constitutes full and final equitable adjustment for this change. The contractor releases the Government from any liability under this contract for further equitable adjustments attributable to facts & circumstances or impact of this change.

CONTRACTOR MUST CHECK ONE OF THE FOLLOWING:

[ ] The contract completion date is extended to _____

[X] The contract completion date is not extended because of this change.

SETTLEMENT PRICE: $ 964.00 | CHANGE ORDER # A- 34

J. C. PORTER	6-2-89 1200 HRS	
Contracting Officer	Proceed as of Date/Time	Contractor

Department of Transportation // U.S. Coast Guard // MLCPAC/vpi-1 (5-89)

CHANGE ORDER REQUEST / AUTHORIZATION

Ship	Contract No	Request No	Page 1 of
CGC POLAR SEA (WAGB-11)	DTCG85-89-B-55136	R-028	2

PART I. REQUEST. The COTR certifies that the work described below must be performed during this availability and requests issuance of a Change Order.

CHANGE ORDER SPECIFICATION CHANGE ITEM# D-10 as changed by ~~R-028~~

TITLE: FIREMAIN VALVE SEAT REBUILD

Ship's POC: DC2 KIEBER

Ref CFR: 4[illegible],6[illegible],[illegible] 75,76,77,78,79

Specifications Prepared by:	Date:	COTR Approval:	Date:
R. D. MOORE, LCDR, USCG	5/22/89	J. J. MCCLELLAND, CAPT, USCG	5/22/89

PART II. TECHNICAL APPROVAL, P.R. AND STATEMENT OF ESSENTIAL NEED.

1. Description: See Specification in Part I.
2. Primary Need: [XX] GROWTH WORK Add to Basic Item # D-10 [ ] NEW WORK Add Item #
3. Impact of Denial: [X] Mission Essential or [ ] Health and Safety

MLC SPO SEATTLE Review:	Date:	(vp) Tech Approval:	Date:	Funds Approval:
G. L. SWAN, LCDR	5/24/89	J. G. GAMBLE, LCDR, USCG		/

FUND CITATION:
40-C-1-9-93- - -

ORIG EST $_____

REV EST $_____

PART III. SETTLEMENT AGREEMENT By signature below the parties agree that this settlement is considered fair and reasonable and that it constitutes full and final equitable adjustment for this change. The contractor releases the Government from any liability under this contract for further equitable adjustments attributable to facts & circumstances or impact of this change.

CONTRACTOR MUST CHECK ONE OF THE FOLLOWING:

[ ] The contract completion date is extended to _____

[X] The contract completion date is not extended because of this change.

SETTLEMENT PRICE: $ 3547.00 CHANGE ORDER # A- 35

J. C. PORTER Contracting Officer	6-2-89 3:40 P.M. Proceed as of Date/Time	Contractor

Department of Transportation // U.S. Coast Guard // MLCPAC/vpi-1 (5-89)

CHANGE ORDER REQUEST / AUTHORIZATION

Ship	Contract No	Request No	Page 1 of
CGC POLAR SEA (WAGB-11)	DTCG85-87-B-55136	R-036	1

PART I. REQUEST. The COTF certifies that the work described below must be performed during this availability and requests issuance of a Change Order.

CHANGE ORDER SPECIFICATION CHANGE ITEM# D- 29 as changed by R-036

TITLE: LESLIE WATER HEATER STEAM REDUCING STATION

Ship's POC: SSCE MULDONG/ ES1 JOHNSON Ref CFP: 31

Specifications Prepared by:	Date:	COTF Approval:	Date:
R. D. PORTER LCDR, USCG	5/22/89	J. MCCLELLAND, CAPT, USCG	5/22/89

PART II. TECHNICAL APPROVAL, P.P, AND STATEMENT OF ESSENTIAL NEED.

1. Description: See Specification in Part I.
2. Primary Need: [X] GROWTH WORK [ ] NEW WORK
   Add to Basic Item # D-29 Add Item #
3. Impact of Denial: [X] Mission Essential or [ ] Health and Safety

MLC SPD SEATTLE Review:	Date:	Tech Approval:	Date:	Funds Approval:
D. S. SWAN, LCDR	6/29/89	J. B. GAMBLE, LCDR, USCG		

FUND CITATION: 40-C-1-9-33- ORIG EST $_____

REV EST $_____

PART III. SETTLEMENT AGREEMENT By signature below the parties agree that this settlement is considered fair and reasonable and that it constitutes full and final equitable adjustment for this change. The contractor releases the Government from any liability under this contract for further equitable adjustments attributable to facts & circumstances or impact of this change.

CONTRACTOR MUST CHECK ONE OF THE FOLLOWING:

[ ] The contract completion date is extended to _____

[X] The contract completion date is not extended because of this change.

SETTLEMENT PRICE: $ 2743 CR CHANGE ORDER # A- 36

R. D. PORTER Contracting Officer	6-2-89 1595 HRS Proceed as of Date/Time	Contractor

US COAST GUARD MLC PACIFIC PROCUREMENT 89 JUN -7 P 2:29

AMENDMENT OF SOLICITATION/MODIFICATION OF CONTRACT

1 2

2. AMENDMENT/MODIFICATION NO.	3. EFFECTIVE DATE	4. REQUISITION/PURCHASE REQ. NO.	5. PROJECT NO. (If applicable)
00007	12 JUN 89		CGC POLAR SEA

6. ISSUED BY CODE DTCG85

Commander (vpl)
Maintenance and Logistic Command Pacific
Coast Guard Island, Bldg. 50-7
Alameda, CA 94501-5100

7. ADMINISTERED BY (If other than Item 6) CODE

8. NAME AND ADDRESS OF CONTRACTOR (No., street, county, State and ZIP Code)

Northwest Marine Iron Works
5555 N. Channel, Bldg.2
Portland, OR 97217 (503)285-7557

CODE FACILITY CODE

(✓) 9A. AMENDMENT OF SOLICITATION NO.

9B. DATED (SEE ITEM 11)

10A. MODIFICATION OF CONTRACT/ORDER NO. DTCG85-89-C-55136

X 10B. DATED (SEE ITEM 13) 22 March 1989

11. THIS ITEM ONLY APPLIES TO AMENDMENTS OF SOLICITATIONS

☐ The above numbered solicitation is amended as set forth in Item 14. The hour and date specified for receipt of Offers ☐ is extended, ☐ is not extended.

Offers must acknowledge receipt of this amendment prior to the hour and date specified in the solicitation or as amended, by one of the following methods:

(a) By completing Items 8 and 15, and returning _____ copies of the amendment; (b) By acknowledging receipt of this amendment on each copy of the offer submitted; or (c) By separate letter or telegram which includes a reference to the solicitation and amendment numbers. FAILURE OF YOUR ACKNOWLEDGMENT TO BE RECEIVED AT THE PLACE DESIGNATED FOR THE RECEIPT OF OFFERS PRIOR TO THE HOUR AND DATE SPECIFIED MAY RESULT IN REJECTION OF YOUR OFFER. If by virtue of this amendment you desire to change an offer already submitted, such change may be made by telegram or letter, provided each telegram or letter makes reference to the solicitation and this amendment, and is received prior to the opening hour and date specified.

12. ACCOUNTING AND APPROPRIATION DATA (If required)
40 C 1 9 33 45.00.20 75171 2561 Increase: $50,000.00 New Total: $2,146,115.00

13. THIS ITEM APPLIES ONLY TO MODIFICATIONS OF CONTRACTS/ORDERS, IT MODIFIES THE CONTRACT/ORDER NO. AS DESCRIBED IN ITEM 14.

(✓) A. THIS CHANGE ORDER IS ISSUED PURSUANT TO: (Specify authority) THE CHANGES SET FORTH IN ITEM 14 ARE MADE IN THE CONTRACT ORDER NO. IN ITEM 10A.
X CHANGES FAR 52-243-1 Alternate II

B. THE ABOVE NUMBERED CONTRACT/ORDER IS MODIFIED TO REFLECT THE ADMINISTRATIVE CHANGES (such as changes in paying office, appropriation date, etc.) SET FORTH IN ITEM 14, PURSUANT TO THE AUTHORITY OF FAR 43.103(b).

C. THIS SUPPLEMENTAL AGREEMENT IS ENTERED INTO PURSUANT TO AUTHORITY OF:

D. OTHER (Specify type of modification and authority)

E. IMPORTANT: Contractor ☒ is not, ☐ is required to sign this document and return _____ copies to the issuing office.

14. DESCRIPTION OF AMENDMENT/MODIFICATION (Organized by UCF section headings, including solicitation/contract subject matter where feasible.)

SEE ATTACHED.

Except as provided herein, all terms and conditions of the document referenced in Item 9A or 10A, as heretofore changed, remains unchanged and in full force and effect.

15A. NAME AND TITLE OF SIGNER (Type or print)		16A. NAME AND TITLE OF CONTRACTING OFFICER (Type or print)	
		JOHN C. PORTER	
15B. CONTRACTOR/OFFEROR	15C. DATE SIGNED	16B. UNITED STATES OF AMERICA	16C. DATE SIGNED
(Signature of person authorized to sign)		BY (Signature of Contracting Officer)	6/12/89

NSN 7540-01-152-8070
PREVIOUS EDITION UNUSABLE

30-105

STANDARD FORM 30 (REV. 10-83)
Prescribed by GSA
FAR (48 CFR) 53.243

DRYDOCKING AND REPAIRS TO USCGC POLAR SEA (WAGB 11)

A. In accordance with Paragraph H.2 of the contract, perform the work specified by Change Request R-060.

B. DO NOT EXCEED $50,000 without the written authorization of the Contracting Officer; the contract amount is provisionally increased:

From:	$2,096,115
By:	$50,000
To:	$2,146,115

C. Pursuant to the contract "Changes" clause (FAR 52.243-1 (Alternate II), Contractor is hereby authorized and directed to proceed with the above changes. Northwest Marine Iron Works has submitted an itemized cost of breakdown for R-060. Sufficient time does not exist at present to complete evaluation of this proposal and conduct negotiations. The Government will complete review of Northwest Marine Iron Works proposal and commence negotiations within five (05) working days so that an equitable adjustment to the contract may be negotiated.

AMENDMENT OF SOLICITATION/MODIFICATION OF CONTRACT

1 2

2. AMENDMENT/MODIFICATION NO.	3. EFFECTIVE DATE	4. REQUISITION/PURCHASE REQ. NO.	5. PROJECT NO. (If applicable)
00007	12 JUN 89		CGC POLAR SEA

6. ISSUED BY CODE DTCG85

Commander (vpl)
Maintenance and Logistic Command Pacific
Coast Guard Island, Bldg. 50-7
Alameda, CA 94501-5100

7. ADMINISTERED BY (If other than Item 6) CODE

8. NAME AND ADDRESS OF CONTRACTOR (No., street, county, State and ZIP Code)

Northwest Marine Iron Works
5555 N. Channel, Bldg.2
Portland, OR 97217 (503)285-7557

CODE FACILITY CODE

(✓) 9A. AMENDMENT OF SOLICITATION NO.

9B. DATED (SEE ITEM 11)

10A. MODIFICATION OF CONTRACT/ORDER NO. DTCG85-89-C-55136

X 10B. DATED (SEE ITEM 13) 22 March 1989

11. THIS ITEM ONLY APPLIES TO AMENDMENTS OF SOLICITATIONS

☐ The above numbered solicitation is amended as set forth in Item 14. The hour and date specified for receipt of Offers ☐ is extended, ☐ is not extended.

Offers must acknowledge receipt of this amendment prior to the hour and date specified in the solicitation or as amended, by one of the following methods:

(a) By completing Items 8 and 15, and returning _____ copies of the amendment; (b) By acknowledging receipt of this amendment on each copy of the offer submitted; or (c) By separate letter or telegram which includes a reference to the solicitation and amendment numbers. FAILURE OF YOUR ACKNOWLEDGMENT TO BE RECEIVED AT THE PLACE DESIGNATED FOR THE RECEIPT OF OFFERS PRIOR TO THE HOUR AND DATE SPECIFIED MAY RESULT IN REJECTION OF YOUR OFFER. If by virtue of this amendment you desire to change an offer already submitted, such change may be made by telegram or letter, provided each telegram or letter makes reference to the solicitation and this amendment, and is received prior to the opening hour and date specified.

12. ACCOUNTING AND APPROPRIATION DATA (If required)
40 C 1 9 33 45.00.20 75171 2561 Increase: $50,000.00 New Total: $2,146,115.00

13. THIS ITEM APPLIES ONLY TO MODIFICATIONS OF CONTRACTS/ORDERS, IT MODIFIES THE CONTRACT/ORDER NO. AS DESCRIBED IN ITEM 14.

(✓)

X A. THIS CHANGE ORDER IS ISSUED PURSUANT TO: (Specify authority) THE CHANGES SET FORTH IN ITEM 14 ARE MADE IN THE CONTRACT ORDER NO. IN ITEM 10A.
CHANGES FAR 52-243-1 Alternate II

B. THE ABOVE NUMBERED CONTRACT/ORDER IS MODIFIED TO REFLECT THE ADMINISTRATIVE CHANGES (such as changes in paying office, appropriation date, etc.) SET FORTH IN ITEM 14, PURSUANT TO THE AUTHORITY OF FAR 43.103(b).

C. THIS SUPPLEMENTAL AGREEMENT IS ENTERED INTO PURSUANT TO AUTHORITY OF:

D. OTHER (Specify type of modification and authority)

E. IMPORTANT: Contractor ☒ is not, ☐ is required to sign this document and return _____ copies to the issuing office.

14. DESCRIPTION OF AMENDMENT/MODIFICATION (Organized by UCF section headings, including solicitation/contract subject matter where feasible.)

SEE ATTACHED.

Except as provided herein, all terms and conditions of the document referenced in Item 9A or 10A, as heretofore changed, remains unchanged and in full force and effect.

15A. NAME AND TITLE OF SIGNER (Type or print)		16A. NAME AND TITLE OF CONTRACTING OFFICER (Type or print)	
		JOHN C. PORTER	
15B. CONTRACTOR/OFFEROR	15C. DATE SIGNED	16B. UNITED STATES OF AMERICA	16C. DATE SIGNED
(Signature of person authorized to sign)		BY (Signature of Contracting Officer)	6/12/89

NSN 7540-01-152-8070
PREVIOUS EDITION UNUSABLE

30-105

STANDARD FORM 30 (REV. 10-83)
Prescribed by GSA
FAR (48 CFR) 53.243

NWMAR127924

DRYDOCKING AND REPAIRS TO USCGC POLAR SEA (WAGB 11)

A. This modification is issued to correct the wording of Modification 00007. Delete paragraph B of Modification 00007 and in its place substitute the following:

"B. DO NOT EXCEED $60,000 or 2,100 AGR manhours without the written authorization of the Contracting Officer; the contract amount is provisionally increased:

From: $2,096,115
By: $60,000
To: $2,156,115 "

B. All other terms and conditions of Modification 00007 remain in force.

AMENDMENT OF SOLICITATION/MODIFICATION OF CONTRACT

1 | 2

2. AMENDMENT/MODIFICATION NO.	3. EFFECTIVE DATE	4. REQUISITION/PURCHASE REQ. NO.	5. PROJECT NO. (If applicable)
00008	13 June 89		CGC POLAR SEA

6. ISSUED BY CODE
Commander (vpl)
Maintenance and Logistic Command Pacific
Coast Guard Island, Bldg. 50-7
Alameda, CA 94501-5100

7. ADMINISTERED BY (If other than Item 6) CODE

8. NAME AND ADDRESS OF CONTRACTOR (No., street, county, State and ZIP Code)

Northwest Marine Iron Works
5555 N. Channel, Bldg. 2
Portland, OR 97217 (503) 285-7557

CODE FACILITY CODE

(✓) 9A. AMENDMENT OF SOLICITATION NO.

9B. DATED (SEE ITEM 11)

X 10A. MODIFICATION OF CONTRACT/ORDER NO. DTCG85-89-C-55136

10B. DATED (SEE ITEM 13) 22 March 1989

11. THIS ITEM ONLY APPLIES TO AMENDMENTS OF SOLICITATIONS

☐ The above numbered solicitation is amended as set forth in Item 14. The hour and date specified for receipt of Offers ☐ is extended, ☐ is not extended.

Offers must acknowledge receipt of this amendment prior to the hour and date specified in the solicitation or as amended, by one of the following methods:

(a) By completing Items 8 and 15, and returning _____ copies of the amendment; (b) By acknowledging receipt of this amendment on each copy of the offer submitted; or (c) By separate letter or telegram which includes a reference to the solicitation and amendment numbers. FAILURE OF YOUR ACKNOWLEDGMENT TO BE RECEIVED AT THE PLACE DESIGNATED FOR THE RECEIPT OF OFFERS PRIOR TO THE HOUR AND DATE SPECIFIED MAY RESULT IN REJECTION OF YOUR OFFER. If by virtue of this amendment you desire to change an offer already submitted, such change may be made by telegram or letter, provided each telegram or letter makes reference to the solicitation and this amendment, and is received prior to the opening hour and date specified.

12. ACCOUNTING AND APPROPRIATION DATA (If required)

40 C 1 9 33 45.00.20 75171 2561 Increase: $10,000.00 New Total: $2,156,115.00

13. THIS ITEM APPLIES ONLY TO MODIFICATIONS OF CONTRACTS/ORDERS, IT MODIFIES THE CONTRACT/ORDER NO. AS DESCRIBED IN ITEM 14.

(✓)

X A. THIS CHANGE ORDER IS ISSUED PURSUANT TO: (Specify authority) THE CHANGES SET FORTH IN ITEM 14 ARE MADE IN THE CONTRACT ORDER NO. IN ITEM 10A.
CHANGES FAR 52-243-1 Alternate II

B. THE ABOVE NUMBERED CONTRACT/ORDER IS MODIFIED TO REFLECT THE ADMINISTRATIVE CHANGES (such as changes in paying office, appropriation date, etc.) SET FORTH IN ITEM 14, PURSUANT TO THE AUTHORITY OF FAR 43.103(b).

C. THIS SUPPLEMENTAL AGREEMENT IS ENTERED INTO PURSUANT TO AUTHORITY OF:

D. OTHER (Specify type of modification and authority)

E. IMPORTANT: Contractor ☒ is not, ☐ is required to sign this document and return _____ copies to the issuing office.

14. DESCRIPTION OF AMENDMENT/MODIFICATION (Organized by UCF section headings, including solicitation/contract subject matter where feasible.)

SEE ATTACHED.

Except as provided herein, all terms and conditions of the document referenced in Item 9A or 10A, as heretofore changed, remains unchanged and in full force and effect.

15A. NAME AND TITLE OF SIGNER (Type or print)		16A. NAME AND TITLE OF CONTRACTING OFFICER (Type or print)	
		JOHN C. PORTER	
15B. CONTRACTOR/OFFEROR	15C. DATE SIGNED	16B. UNITED STATES OF AMERICA	16C. DATE SIGNED
(Signature of person authorized to sign)		BY (Signature of Contracting Officer)	6/13/89

NSN 7540-01-152-8070
PREVIOUS EDITION UNUSABLE

30-105

STANDARD FORM 30 (REV. 10-83)
Prescribed by GSA
FAR (48 CFR) 53.243

DRYDOCKING AND REPAIRS TO USCGC POLAR SEA (WAGB 11)

A. This modification is issued to correct the wording of Modification 00007. Delete paragraph B of Modification 00007 and in its place substitute the following:

"B. DO NOT EXCEED $60,000 or 2,100 AGR manhours without the written authorization of the Contracting Officer; the contract amount is provisionally increased:

From: $2,096,115
By: $60,000
To: $2,156,115 "

B. All other terms and conditions of Modification 00007 remain in force.

AMENDMENT OF SOLICITATION/MODIFICATION OF CONTRACT

1. CONTRACT ID CODE	PAGE OF PAGES
	1 | 2

2. AMENDMENT/MODIFICATION NO.	3. EFFECTIVE DATE	4. REQUISITION/PURCHASE REQ. NO.	5. PROJECT NO. (If applicable)
00009	30 MAY 89	RECEIVED	CGC POLAR SEA

6. ISSUED BY CODE DTCG85

Commander (vpl)
Maintenance and Logistic Command Pacific
Coast Guard Island, Bldg. 50-7
Alameda, CA 94501-5100

7. ADMINISTERED BY (If other than Item 6) CODE

89 JUN 20 AM 10: 08

8. NAME AND ADDRESS OF CONTRACTOR (No., street, county, State and ZIP Code)

Northwest Marine Iron Works
5555 N. Channel, Bldg.2
Portland, OR 97217 (503)285-7557

CODE FACILITY CODE

(✓) 9A. AMENDMENT OF SOLICITATION NO.

9B. DATED (SEE ITEM 11)

X 10A. MODIFICATION OF CONTRACT/ORDER NO. DTCG85-89-C-55136

10B. DATED (SEE ITEM 13) 22 March 1989

11. THIS ITEM ONLY APPLIES TO AMENDMENTS OF SOLICITATIONS

☐ The above numbered solicitation is amended as set forth in Item 14. The hour and date specified for receipt of Offers ☐ is extended, ☐ is not extended.

Offers must acknowledge receipt of this amendment prior to the hour and date specified in the solicitation or as amended, by one of the following methods:

(a) By completing Items 8 and 15, and returning _____ copies of the amendment; (b) By acknowledging receipt of this amendment on each copy of the offer submitted; or (c) By separate letter or telegram which includes a reference to the solicitation and amendment numbers. FAILURE OF YOUR ACKNOWLEDGMENT TO BE RECEIVED AT THE PLACE DESIGNATED FOR THE RECEIPT OF OFFERS PRIOR TO THE HOUR AND DATE SPECIFIED MAY RESULT IN REJECTION OF YOUR OFFER. If by virtue of this amendment you desire to change an offer already submitted, such change may be made by telegram or letter, provided each telegram or letter makes reference to the solicitation and this amendment, and is received prior to the opening hour and date specified.

12. ACCOUNTING AND APPROPRIATION DATA (If required) Increase: $60,428.00 New Total: $2,216,543.00

13. THIS ITEM APPLIES ONLY TO MODIFICATIONS OF CONTRACTS/ORDERS, IT MODIFIES THE CONTRACT/ORDER NO. AS DESCRIBED IN ITEM 14.

(✓)

A. THIS CHANGE ORDER IS ISSUED PURSUANT TO: (Specify authority) THE CHANGES SET FORTH IN ITEM 14 ARE MADE IN THE CONTRACT ORDER NO. IN ITEM 10A.

B. THE ABOVE NUMBERED CONTRACT/ORDER IS MODIFIED TO REFLECT THE ADMINISTRATIVE CHANGES (such as changes in paying office, appropriation date, etc.) SET FORTH IN ITEM 14, PURSUANT TO THE AUTHORITY OF FAR 43.103(b).

X C. THIS SUPPLEMENTAL AGREEMENT IS ENTERED INTO PURSUANT TO AUTHORITY OF: Bilateral Agreement as set forth on the attached Change Request/Authorization Forms.

D. OTHER (Specify type of modification and authority)

E. IMPORTANT: Contractor ☒ is not, ☐ is required to sign this document and return _____ copies to the issuing office.

14. DESCRIPTION OF AMENDMENT/MODIFICATION (Organized by UCF section headings, including solicitation/contract subject matter where feasible.)

SEE ATTACHED.

Except as provided herein, all terms and conditions of the document referenced in Item 9A or 10A, as heretofore changed, remains unchanged and in full force and effect.

15A. NAME AND TITLE OF SIGNER (Type or print)		16A. NAME AND TITLE OF CONTRACTING OFFICER (Type or print)	
		AILEEN D. GILLEM	
15B. CONTRACTOR/OFFEROR (Signature of person authorized to sign)	15C. DATE SIGNED	16B. UNITED STATES OF AMERICA BY Aileen D. Gillem (Signature of Contracting Officer)	16C. DATE SIGNED 6-14-89

INSTRUCTIONS

Instructions for items other than those that are self-explanatory, are as follows:

(a) Item 1 (Contract ID Code). Insert the contract type identification code that appears in the title block of the contract being modified.

(b) Item 3 (Effective date).

(1) For a solicitation amendment, change order, or administrative change, the effective date shall be the issue date of the amendment, change order, or administrative change.

(2) For a supplemental agreement, the effective date shall be the date agreed to by the contracting parties.

(3) For a modification issued as an initial or confirming notice of termination for the convenience of the Government, the effective date and the modification number of the confirming notice shall be the same as the effective date and modification number of the initial notice.

(4) For a modification converting a termination for default to a termination for the convenience of the Government, the effective date shall be the same as the effective date of the termination for default.

(5) For a modification confirming the contracting officer's determination of the amount due in settlement of a contract termination, the effective date shall be the same as the effective date of the initial decision.

(c) Item 6 (Issued By). Insert the name and address of the issuing office. If applicable, insert the appropriate issuing office code in the code block.

(d) Item 8 (Name and Address of Contractor). For modifications to a contract or order, enter the contractor's name, address, and code as shown in the original contract or order, unless changed by this or a previous modification.

(e) Items 9, (Amendment of Solicitation No.—Dated), and 10, (Modification of Contract/Order No.—Dated). Check the appropriate box and in the corresponding blanks insert the number and date of the original solicitation, contract, or order.

(f) Item 12 (Accounting and Appropriation Data). When appropriate, indicate the impact of the modification on each affected accounting classification by inserting one of the following entries:

(1) Accounting classification .....
Net increase $.....

(2) Accounting classification .....
Net decrease $.....

NOTE: If there are changes to multiple accounting classifications that cannot be placed in block 12, insert an asterisk and the words "See continuation sheet".

(g) Item 13. Check the appropriate box to indicate the type of modification. Insert in the corresponding blank the authority under which the modification is issued. Check whether or not contractor must sign this document. (See FAR 43.103.)

(h) Item 14 (Description of Amendment/Modification).

(1) Organize amendments or modifications under the appropriate Uniform Contract Format (UCF) section headings from the applicable solicitation or contract. The UCF table of contents, however, shall not be set forth in this document.

(2) Indicate the impact of the modification on the overall total contract price by inserting one of the following entries:

(i) Total contract price increased by $ .....

(ii) Total contract price decreased by $ .....

(iii) Total contract price unchanged.

(3) State reason for modification.

(4) When removing, reinstating, or adding funds, identify the contract items and accounting classifications.

(5) When the SF 30 is used to reflect a determination by the contracting officer of the amount due in settlement of a contract terminated for the convenience of the Government, the entry in Item 14 of the modification may be limited to —

(i) A reference to the letter determination; and

(ii) A statement of the net amount determined to be due in settlement of the contract.

(6) Include subject matter or short title of solicitation/contract where feasible.

(i) Item 16B. The contracting officer's signature is not required on solicitation amendments. The contracting officer's signature is normally affixed last on supplemental agreements.

☆U.S. Government Printing Office: 1989—201-760/80089

NWMAR127929

DRYDOCKING AND REPAIRS TO USCGC POLAR SEA (WAGB 11)

A. Incorporate the following changes at the prices stated below and as described on the attached Change Request/Authorization forms.

Agreement #	Request#	Basic Item #	Amount
A-28	R-30	D-20	$18,647.00
A-37	R-37	D-13	$2,779.00
A-38	R-43	D-13	$292.00
A-39	R-57	D-13	$3,495.00
A-40	R-50	D-13	$25,750.00
A-41	R-51	D-13	$8,500.00
A-42	R-47	D-13	$1,575.00
A-43	R-49	D-13	$2,850.00
A-44	R-59	D-11	$1,485.00
A-45	R-56	D-36	$4,506.00
A-46	R-52	D-09	$860.00
A-47	R-53	D-13	$7,302.00
A-48	R-63	D-43	<$18,000.00>
A-49	R-58	D-09	$387.00
		TOTAL	$60,428.00

B. These Accounting Data applies:

40 C 1 9 33 45.00.20 75171 2561	$18,647.00
40 C 1 9 33 45.00.20 75171 2552	$37,275.00
40 C 1 9 33 45.00.20 75171 2525	$4,506.00

C H A N G E O R D E R R E Q U E S T / A U T H O R I Z A T I O N

Ship	Contract No	Request No	Page 1 of
CGC POLAR SEA (WAGB-11)	DTCG85-89-B-55136	R-030	2

PART I. REQUEST. The COTR certifies that the work described below must be performed during this availability and requests issuance of a Change Order.

CHANGE ORDER SPECIFICATION CHANGE ITEM# D-20 as changed by R- 030

TITLE: VENT FAN DUCT WORK

(1) Ref: CFR 41 (a) Vent fan housings 3-90-1, 2, 3, & 4; 3-90-1 & 2; and 3-150-1 may remain in their respective areas for the purpose of painting the housings. The use of power tools is an acceptable method of surface preparation for the interior and exterior of the fan housings.

(b) Impellers may be balanced in place as long as the specs stated in NAVSEA 009-15 are followed.

CONTINUED ON NEXT PAGE

Ship's POC: EMCM MOSPENS | Ref CFR: 41,55,65

Specifications Prepared by:	Date:	COTR Approval:	Date:
R. W. MOORE, LCDR, USCG	5/15	J. J. MCCLELLAND, CAPT, USCG	6/11/89

PART II. TECHNICAL APPROVAL, P.R. AND STATEMENT OF ESSENTIAL NEED.

1. Description: See Specification in Part I.
2. Primary Need: [ ] GROWTH WORK Add to Basic Item # | [ ] NEW WORK Add Item #
3. Impact of Denial: [ ] Mission Essential or [ ] Health and Safety

MLC SRD SEATTLE Review:	Date:	(vr) Tech Approval:	Date:	Funds Approval:
G. L. SWAN, LCDR		J. Q. GAMBLE, LCDR, USCG		/

FUND CITATION: 40-C-1-9-33- - -

ORIG EST $_____

REV EST $_____

PART III. SETTLEMENT AGREEMENT By signature below the parties agree that this settlement is considered fair and reasonable and that it constitutes full and final equitable adjustment for this change. The contractor releases the Government from any liability under this contract for further equitable adjustments attributable to facts & circumstances or impact of this change.

CONTRACTOR MUST CHECK ONE OF THE FOLLOWING:

[ ] The contract completion date is extended to _____

[X] The contract completion date is not extended because of this change.

SETTLEMENT PRICE: $ 18,647.00 | CHANGE ORDER # A- 28

J. C. PORTER Contracting Officer	5-30-89 4:30PM Proceed as of Date/Time	Contractor

CHANGE REQUEST / AUTHORIZATION

Ship	Contract No	Request No	Page 1 of
USCGC POLAR SEA (WAGB-11)	DTCG85-89-C-55136	R-037	2

PART I. REQUEST. The COTR certifies that the work described below must be performed during this availability & requests issuance of a Contract Change.

CHANGE SPECIFICATION: Change Item# D-13 as previously changed by R-_____

TITLE: REPAIR MISC SHAFTING ITEMS

Contractor shall provide all labor, equipment and materials to perform repairs to bulkhead seal studs, gland ring fasteners and bearing cavities.

1. Renew 13 bulkhead seal studs using brass stock.
2. Renew 57 each nuts, flat washers, lock washers using 316 stainless

US COAST GUARD MLC PAC NAVAL ENGINEERING PROCUREMENT 1989 JUN 12 P 3:

SHIP'S P.O.C.: CWO3 FORD/MKCM CARDONA/MKC VOLPE | REF CFR: 036

[Attach Additional Pages as Necessary]

Specifications Prepared by	Date	COTR Approval	Date
R. D. MOORE, LCDR, USCG	5/30/89	J. J. McCLELLAND, CAPT, USCG	31.5.89

PART II. TECHNICAL APPROVAL, P.R. AND STATEMENT OF ESSENTIAL NEED

1. Description: See Specification in PART I.
2. Primary Need: [XX] GROWTH WORK Add to Basic Item # D-13 | [ ] NEW WORK Add Item # _____
3. Impact of Denial: [XX] Mission Essential or [ ] Health and Safety

MLC SRD SEATTLE Review:	Date:	(vr) Tech Approval:	Date:	Funds Appr:
G. L. SWAN, LCDR, USCG	5/31/89	J. Q. GAMBLE, LCDR, USCG		

FUND CITATION: ORIG EST $_____

40-C-1-9-33-_ _._ _._ _-75171-_ _ _ _ REV $_____

PART III. SETTLEMENT AGREEMENT By signature below the parties agree that this settlement is considered fair and reasonable and that it constitutes full and final equitable adjustment for this change. The contractor releases the Government from any liability under this contract for further equitable adjustments attributable to facts & circumstances or impact of this change.

CONTRACTOR MUST CHECK ONE OF THE FOLLOWING:

[ ] The contract completion date is extended to _____

[X] The contract completion date is not extended because of this change.

SETTLEMENT PRICE: $ 2779.00 | CHANGE ORDER # A- 37

Debit ACR 80 HRS

J. Q. PORTER, Contracting Officer	6-5-89 1:00 PM, Proceed as of Date/Time	Contractor

Department of Transportation // U.S. Coast Guard // MLCPAC/vp-1 (5-89)

CHANGE ORDER REQUEST / AUTHORIZATION

Ship	Contract No	Request No	Page 1 of
CGC POLAR SEA (WAGB-11)	DTCG85-89-B-55136	R- 043	2

PART I. REQUEST. The COTR certifies that the work described below must be performed during this availability and requests issuance of a Change Order.

CHANGE ORDER SPECIFICATION CHANGE ITEM# D-13 as changed by R- 043

TITLE: INSPECT HUB MOUNTING BOLTS

130E

US COAST GUARD MLC PAC NAVAL ENGINEERING PROCUREMENT 1989 JUN 12 P 1:37

Ship's POC: CWO3 FORD/MIDM CARDONA/MKI VOLPE | Ref CFR: 87

Specifications Prepared by:	Date:	COTR Approval:	Date:
R. R. FUORE, LCDR, USCG	5/22/89	J. M. MCCLELLAND, CAPT, USCG for	5/22/89

PART II. TECHNICAL APPROVAL, P.R. AND STATEMENT OF ESSENTIAL NEED.

1. Description: See Specification in Part 1.
2. Primary Need: [X] GROWTH WORK | [ ] NEW WORK
   Add to Basic Item # D-13 | Add Item #
3. Impact of Denial: [X] Mission Essential or [ ] Health and Safety

MLC PAC SEATTLE Review:	Date:	(vr) Tech Approval:	Date:	Funds Approval:
G. T. EWAN, LCDR	5/24	J. G. GAMBLE, LCDR, USCG	,	

FUND CITATION: ORIG EST $_____

40-D-1-P-33- - -

REV EST $_____

PART III. SETTLEMENT AGREEMENT By signature below the parties agree that this settlement is considered fair and reasonable and that it constitutes full and final equitable adjustment for this change. The contractor releases the Government from any liability under this contract for further equitable adjustments attributable to facts & circumstances or impact of this change.

CONTRACTOR MUST CHECK ONE OF THE FOLLOWING:

[ ] The contract completion date is extended to _____

[X] The contract completion date is not extended because of this change.

SETTLEMENT PRICE: $ 292.00 | CHANGE ORDER # A- 38

J. C. PORTER	6-6-89 1300 Hrs	
Contracting Officer	Proceed as of Date/Time	Contractor

NWMAR127933

Department of Transportation // U.S. Coast Guard // MLCPAC/vpl-1 (Rev 5-89)

CHANGE REQUEST / AUTHORIZATION

Ship	Contract No	Request No	Page 1 of
USCGC POLAR SEA (WAGB-11)	DTCG85-89-C-55136	R-057	2

PART I. REQUEST. The COTR certifies that the work described below must be performed during this availability & requests issuance of a Contract Change.

CHANGE SPECIFICATION: Change Item# D-13 as previously changed by R-_____

TITLE: ADDITIONAL SHAFT/PROP DOWELING REQUIREMENTS

Contractor shall provide all labor, equipment and materials except as noted to perform the following additional requirements for tailshaft and propeller doweling.

1. Provide personnel and transportation for the GFE propeller dowel template to SULZER-BINGHAM company.

US COAST GUARD MLC PAC NAVAL ENGINEERING PROCUREMENT 1989 MAY 12 P 1:

SHIP'S P.O.C.: CWO3 FORD/MKCM CARDONA/MKC VOLPE | REF CFR: 162

[Attach Additional Pages as Necessary]

Specifications Prepared by	Date	COTR Approval	Date
R. D. MOORE, LCDR, USCG	6/6/89	J. J. MCCLELLAND, CAPT, USCG	6 Jun 89

PART II. TECHNICAL APPROVAL, P.R. AND STATEMENT OF ESSENTIAL NEED

1. Description: See Specification in PART I.
2. Primary Need: [XX] GROWTH WORK Add to Basic Item # D-13___ | [ ] NEW WORK Add Item # _____
3. Impact of Denial: [XX] Mission Essential or [ ] Health and Safety

MLC SRD SEATTLE Review:	Date:	(vr) Tech Approval:	Date:	Funds Appr:
G. L. SWAN, LCDR, USCG	6/6/89	J. Q. GAMBLE, LCDR, USCG		

FUND CITATION: 40-C-1-9-33-_ _._ _._ _-75171-_ _ _ _

ORIG EST $_____

REV $_____

PART III. SETTLEMENT AGREEMENT By signature below the parties agree that this settlement is considered fair and reasonable and that it constitutes full and final equitable adjustment for this change. The contractor releases the Government from any liability under this contract for further equitable adjustments attributable to facts & circumstances or impact of this change.

CONTRACTOR MUST CHECK ONE OF THE FOLLOWING:

[ ] The contract completion date is extended to _____

[X] The contract completion date is not extended because of this change.

SETTLEMENT PRICE: $ 3,495.00 | CHANGE ORDER # A- 39

D. C. PORTER, Contracting Officer	6-6-89 2:40 PM Proceed as of Date/Time	Contractor

Department of Transportation / U.S. Coast Guard // MLCPAC/vol-1 (5-89)

C H A N G E O R D E R R E Q U E S T / A U T H O R I Z A T I O N

Ship	Contract No	Request No	Page 1 of
CGC POLAR SEA (WAGB-11)	DTCG85-89-B-55136	R-050	2

PART I. REQUEST. The COTR certifies that the work described below must be performed during this availability and requests issuance of a Change Order.

CHANGE ORDER SPECIFICATION CHANGE ITEM# D-13 as changed by R-

TITLE: FABRICATE NEW OUTER BEARING LINER RETAINING STUDS

US COAST GUARD MLC PAC NAVAL ENGINEERING PROCUREMENT 1989 JUN 12 P 1:37

Ship's POC: CWO FORD/MKCM CARDONA/MKC VOLPE | Ref: CFR 89

Specifications Prepared by:	Date:	COTR Approval:	Date:
R. W. MOORE, LCDR, USCG	5/30/89	J. J. MCCLELLAND, CAPT, USCG	31.5.89

PART II. TECHNICAL APPROVAL, P.R. AND STATEMENT OF ESSENTIAL NEED.

1. Description: See Specification in Part I.
2. Primary Need: [X] GROWTH WORK [ ] NEW WORK
   Add to Basic Item # D-13 Add Item #
3. Impact of Denial: [X] Mission Essential or [ ] Health and Safety

MLC SRD SEATTLE Review:	Date:	(vr) Tech Approval:	Date:	Funds Approval:
G. S. SWAN, LCDR	5/31/89	J. G. GAMBLE, LCDR, USCG	/	/

FUND CITATION: 40-D-1-9-33- - -

ORIG EST $_____

REV EST $_____

PART III. SETTLEMENT AGREEMENT By signature below the parties agree that this settlement is considered fair and reasonable and that it constitutes full and final equitable adjustment for this change. The contractor releases the Government from any liability under this contract for further equitable adjustments attributable to facts & circumstances or impact of this change.

CONTRACTOR MUST CHECK ONE OF THE FOLLOWING:

[ ] The contract completion date is extended to _____

[✓] The contract completion date is not extended because of this change.

SETTLEMENT PRICE: $ 25750.00 | CHANGE ORDER # A- 40

J. C. PORTER Contracting Officer	6-6-89 5:10 pm Proceed as of Date/Time	Contractor

NWMAR127935

Department of Transportation // U.S. Coast Guard // MLCPAC/vpl-1 (Rev 5-89)

CHANGE REQUEST / AUTHORIZATION

Ship	Contract No	Request No	Page 1 of
USCGC POLAR SEA (WAGB-11)	DTCG85-89-C-55136	R-051	2

PART I. REQUEST. The COTR certifies that the work described below must be performed during this availability & requests issuance of a Contract Change.

CHANGE SPECIFICATION: Change Item# D-13 as previously changed by R-051

TITLE: REPAIR SHAFT LINERS

Contractor shall provide all labor, equipment and materials to perform repairs to starboard and port wing shaft forward liners in vicinity of SYNTRON seal surface as described below.

1. Remove protective covering from port and starboard wing shafts in vicinity of forward shaft liner SYNTRON seal surface.

SHIP'S P.O.C.: CWO3 FORD/MKCM CARDONA/MKC VOLPE | REF CFR: 036

[Attach Additional Pages as Necessary]

Specifications Prepared by	Date	COTR Approval	Date
R. D. BOORE, LCDR, USCG	5/31/89	J. J. McCLELLAND, CAPT, USCG	6-5-89

US COAST GUARD 1st NAVAL ENGINEERING DIST. PROCUREMENT DIV. 1989 JUN 12 PM 12:55

PART II. TECHNICAL APPROVAL, P.R. AND STATEMENT OF ESSENTIAL NEED

1. Description: See Specification in PART I.
2. Primary Need: [XX] GROWTH WORK Add to Basic Item # D-13 | [ ] NEW WORK Add Item # _____
3. Impact of Denial: [XX] Mission Essential or [ ] Health and Safety

MLC SRD SEATTLE Review:	Date:	(vr) Tech Approval:	Date:	Funds Appr:
G. L. EWAN, LCDR, USCG	6/2/89	J. Q. GAMBLE, LCDR, USCG		

FUND CITATION: 40-C-1-9-33-_ _-_ _-_ _-75171-_ _ _ _ ORIG EST $_____

REV $_____

PART III. SETTLEMENT AGREEMENT By signature below the parties agree that this settlement is considered fair and reasonable and that it constitutes full and final equitable adjustment for this change. The contractor releases the Government from any liability under this contract for further equitable adjustments attributable to facts & circumstances or impact of this change.

CONTRACTOR MUST CHECK ONE OF THE FOLLOWING:

[ ] The contract completion date is extended to _____

[X] The contract completion date is not extended because of this change.

SETTLEMENT PRICE: $ 8500.00 | CHANGE ORDER # A- 41

J. C. PORTER, Contracting Officer	6-6-89 5:20 pm Proceed as of Date/Time	Contractor

Department of Transportation // U.S. Coast Guard // MLCPAC/vpl-1 (5-89)

CHANGE ORDER REQUEST / AUTHORIZATION

Ship	Contract No	Request No	Page 1 of
CGC POLAR SEA (WAGB-11)	DTCG85-89-B-55136	R- 047	2

PART I. REQUEST. The COTR certifies that the work described below must be performed during this availability and requests issuance of a Change Order.

CHANGE ORDER SPECIFICATION CHANGE ITEM# D-13 as changed by R- 047

TITLE: STERN TUBE BEARING SHELL INSPECTION

Rec'd 5-31-89

1989 JUN 12 PM 1:24

US COAST GUARD MLC PACIFIC SMALL ENGINEERING PROCUREMENT

Ship's POC: MKCM CARDONA/MKC VOLPE | Ref DFR: NA

Specifications Prepared by:	Date:	COTR Approval:	Date:
R. D. MOORE, ~~LCDR, USCG~~	5/24/89	J. A. MCCLELLAND, CAPT, USCG	4.5.89

PART II. TECHNICAL APPROVAL, P.R. AND STATEMENT OF ESSENTIAL NEED.

1. Description: See Specification in Part I.
2. Primary Need: [X] GROWTH WORK | [ ] NEW WORK
   Add to Basic Item # D-13 | Add Item #
3. Impact of Denial: [X] Mission Essential or [ ] Health and Safety

MLC SRD SEATTLE Review:	Date:	(vr) Tech Approval:	Date:	Funds Approval:
~~G. L. SWAN, LCDR~~	5/31/89	J. Q. GAMBLE, LCDR, USCG	/	/

FUND CITATION: 40-D-1-9-33- - -

ORIG EST $_____

REV EST $_____

PART III. SETTLEMENT AGREEMENT By signature below the parties agree that this settlement is considered fair and reasonable and that it constitutes full and final equitable adjustment for this change. The contractor releases the Government from any liability under this contract for further equitable adjustments attributable to facts & circumstances or impact of this change.

CONTRACTOR MUST CHECK ONE OF THE FOLLOWING:

[ ] The contract completion date is extended to _____

[X] The contract completion date is not extended because of this change.

SETTLEMENT PRICE: $ 1575.00 | CHANGE ORDER # A- 42

J. C. PORTER	6-6-89 5:50pm	
Contracting Officer	Proceed as of Date/Time	Contractor

NWMAR127937

Department of Transportation // U.S. Coast Guard // MLCPAC (vpl-1 (8-87)

CHANGE ORDER REQUEST / AUTHORIZATION

Ship	Contract No	Request No	Page 1 of
USCGC POLAR SEA (WAGB 11)	DTCG65-89-B-55136	R-049	2

PART I. REQUEST. The COTR certifies that the work described below must be performed during this availability and requests issuance of a Change Order.

CHANGE ORDER SPECIFICATION CHANGE ITEM# D-13 as changed by R-049

TITLE: STERN TUBE BEARING STAVES

Ship's POC: MKCM CARDONA/MKC VOLPE | Ref CFR: 135

Specifications Prepared by	Date	COTR Approval	Date
R. A. MOORE, LCDR	5/25/89	W. J. MCCLELLAND, CAPT	25.5.89

PART II. TECHNICAL APPROVAL, P.R. AND STATEMENT OF ESSENTIAL NEED.

1. Description: See Specification in Part I.
2. Primary Need: [X] GROWTH WORK Add to Basic Item # D-13 | [ ] NEW WORK Add Item #
3. Impact of Denial: [X] Mission Essential / [ ] Health and Safety

SRM Review	Date:	(vr) Tech Approval:	Date:	Funds Approval:
G. SWAN, LCDR	5/31/89	J. G. GAMBLE, LCDR		/

FUNDING: 40-C- - - - - - EST $_____

PART III. SETTLEMENT AGREEMENT (pending mod).

[ ] The contract completion date is extended to _____

[X] The contract completion date is not extended because of this change.

SETTLEMENT PRICE: $ 2850 | CHANGE ORDER # A- A-43

J. C. PORTER	6-7-89 1600 HRS	
Contracting Officer	Proceed as of Date/Time	Contractor

NW JUN 13 P 3:18

US COAST GUARD R/S/S
NAVAL ENGINEERING
PROCUREMENT

Rcd 6-6-8

Department of Transportation // U.S. Coast Guard // MLCPAC/vpl-1 (8-87)

CHANGE ORDER REQUEST / AUTHORIZATION

Ship	Contract No	Request No	Page 1 of
USCGC POLAR SEA (WAGB 11)	DTCG85-89-B-55136	R- 059	2

PART I. REQUEST., The COTR certifies that the work described below must be performed during this availability and requests issuance of a Change Order.

CHANGE ORDER SPECIFICATION CHANGE ITEM# D-11 as changed by R-

TITLE: SEA STRAINER TORQUE BAR AND OPERATING SCREW (#3)

Ship's POD: MKC VOLPE/MKI CROCKETT | Ref DFR: 161

Specifications Prepared by	Date	COTR Approval	Date
R. J. PEDRE, LCDR	6/6/89	J. D. MOLLELLAND, CAPT	6 Jun 89

PART II. TECHNICAL APPROVAL, P.R. AND STATEMENT OF ESSENTIAL NEED.

1. Description: See Specification in Part I.
2. Primary Need: [X] GROWTH WORK Add to Basic Item # D-11 | [ ] NEW WORK Add Item #
3. Impact of Denial: [X] Mission Essential / [ ] Health and Safety

SPD Review:	Date:	(vr) Tech Approval:	Date:	Funds Approval:
G. SWAN, LCDR	6/6/89	J. Q. GAMBLE, LCDR		/

FUNDING: 40-D- - - - - - EST $_____

PART III. SETTLEMENT AGREEMENT (pending mod).

[ ] The contract completion date is extended to _____

[X] The contract completion date is not extended because of this change.

SETTLEMENT PRICE: $ 1485.00 | CHANGE ORDER # A- A-44

J. C. PORTER	6-8-89 4:20 pm	
Contracting Officer	Proceed as of Date/Time	Contractor

US COAST GUARD MLC PAC
NAVAL ENGINEERING
PROCUREMENT
1989 JUN 13 P 2:15

Department of Transportation // U.S. Coast Guard // MLCPAC/vpl-1 (5-89)

CHANGE ORDER REQUEST / AUTHORIZATION

Ship	Contract No	Request No	Page 1 of
CGC POLAR SEA (WAGB-11)	DTCG85-89-B-55136	R- 056	2

PART I. REQUEST. The COTR certifies that the work described below must be performed during this availability and requests issuance of a Change Order.

CHANGE ORDER SPECIFICATION CHANGE ITEM# D-36 as changed by R- 056

TITLE: CENTERLINE BEARING COMPARTMENT SENSOR RENEWAL

Ship's POC: EM1 PREST/ETCS WHITNEY | Ref CFR: 126

Specifications Prepared by:	Date:	COTR Approval:	Date:
R. L. MOORE, LCDR, USCG	6/6/89	J. E. MCCLELLAND, CAPT, USCG	6 Jun 89

PART II. TECHNICAL APPROVAL, P.R. AND STATEMENT OF ESSENTIAL NEED.

1. Description: See Specification in Part I.
2. Primary Need: [X] GROWTH WORK Add to Basic Item # | [ ] NEW WORK Add Item #
3. Impact of Denial: [X] Mission Essential or [ ] Health and Safety

MLC 8RD SEATTLE Review:	Date:	(vr) Tech Approval:	Date:	Funds Approval:
G. L. SWAN, LCDR	6/6/89	J. Q. GAMBLE, LCDR, USCG		

FUND CITATION:
40-C-1-9-33- - -

ORIG EST $_____

REV EST $_____

PART III. SETTLEMENT AGREEMENT By signature below the parties agree that this settlement is considered fair and reasonable and that it constitutes full and final equitable adjustment for this change. The contractor releases the Government from any liability under this contract for further equitable adjustments attributable to facts & circumstances or impact of this change.

CONTRACTOR MUST CHECK ONE OF THE FOLLOWING:

[ ] The contract completion date is extended to

[X] The contract completion date is not extended because of this change.

SETTLEMENT PRICE: $ 4506.00 | CHANGE ORDER # A- 45

J. C. PORTER Contracting Officer	6-8-89 4:50pm Proceed as of Date/Time	Contractor

US COAST GUARD MLCPAC
NAVAL ENGINEERING
PROCUREMENT
PM JUN 13 P 2:15

NWMAR127940

Department of Transportation // U.S. Coast Guard // MLCPAC/vcl-1 (5-89)

CHANGE ORDER REQUEST / AUTHORIZATION

Ship	Contract No	Request No	Page 1 of
CGC POLAR SEA (WAGB-11)	DTCG85-89-B-55136	R- 052	2

PART I. REQUEST. The COTR certifies that the work described below must be performed during this availability and requests issuance of a Change Order.

CHANGE ORDER SPECIFICATION CHANGE ITEM# D-09 as changed by R- 052

TITLE: SEA VALVE REPAIRS #3

Ship's POC: MK1 CROCKETT/MK2 BARNETT | Ref DFR:

Specifications Prepared by:	Date:	CRDM Approval:	Date:
R. D. PRIORE, LCDR, USCG	5/3/89	J. J. MCCLELLAND, CAPT, USCG	1.6.89

PART II. TECHNICAL APPROVAL, P.R. AND STATEMENT OF ESSENTIAL NEED.

1. Description: See Specification in Part I.
2. Primary Need: [X] GROWTH WORK [ ] NEW WORK
   Add to Basic Item # D-09 Add Item #
3. Impact of Denial: [X] Mission Essential or [ ] Health and Safety

MLC 8RD SEATTLE Review:	Date:	(vr) Tech Approval:	Date:	Funds Approval:
G. L. SWAN, LCDR	6/6/89	J. Q. GAMBLE, LCDR, USCG		/

FUND CITATION: ORIG EST $_____

40-C-1-9-33- - -

REV EST $_____

PART III. SETTLEMENT AGREEMENT By signature below the parties agree that this settlement is considered fair and reasonable and that it constitutes full and final equitable adjustment for this change. The contractor releases the Government from any liability under this contract for further equitable adjustments attributable to facts & circumstances or impact of this change.

CONTRACTOR MUST CHECK ONE OF THE FOLLOWING:

[ ] The contract completion date is extended to _____

[X] The contract completion date is not extended because of this change.

SETTLEMENT PRICE: $ 860.00 | CHANGE ORDER # A- 46

J. C. PORTER	6-8-89 5:00 PM	
Contracting Officer	Proceed as of Date/Time	Contractor

PM JUN 13 P 3:18

US COAST GUARD MLC PAC
NAVAL ENGINEERING
PROCUREMENT

Department of Transportation // U.S. Coast Guard // MLCPAC/vpi-1 (5-89)

CHANGE ORDER REQUEST / AUTHORIZATION

Ship	Contract No	Request No	Page 1 of
CGC POLAR SEA (WAGB-11)	DTCG85-89-B-55136	R- 053	2

PART I. REQUEST. The COTR certifies that the work described below must be performed during this availability and requests issuance of a Change Order.

CHANGE ORDER SPECIFICATION CHANGE ITEM# D-13 as changed by R- 053

TITLE: PORT AND CENTERLINE MUFF COUPLING REPAIRS

Ship's POC: CWO3 FORD/MKCM CARDONA/MKC VOLPE | Ref CFR: 141, 149

Specifications Prepared by:	Date:	POC Approval:	Date:
R. D. MOORE, ~~LCDR~~, USCG	5/3/89	J. P. MCCLELLAND, CAPT, USCG	1.6.89

PART II. TECHNICAL APPROVAL, P.R. AND STATEMENT OF ESSENTIAL NEED.

1. Description: See Specification in Part I.
2. Primary Need: [X] GROWTH WORK Add to Basic Item # D-13 | [ ] NEW WORK Add Item #
3. Impact of Denial: [X] Mission Essential or [ ] Health and Safety

MLC SRD SEATTLE Review:	Date:	(vr) Tech Approval:	Date:	Funds Approval:
D. L. SWAN, LCDR	6/4/89	J. Q. GAMBLE, LCDR, USCG		/

FUND CITATION: 40-C-1-9-33- - -

ORIG EST $_____

REV EST $_____

PART III. SETTLEMENT AGREEMENT By signature below the parties agree that this settlement is considered fair and reasonable and that it constitutes full and final equitable adjustment for this change. The contractor releases the Government from any liability under this contract for further equitable adjustments attributable to facts & circumstances or impact of this change.

CONTRACTOR MUST CHECK ONE OF THE FOLLOWING:

[ ] The contract completion date is extended to _____

[X] The contract completion date is not extended because of this change.

SETTLEMENT PRICE: $ 7302.00 | CHANGE ORDER # A- 47

J. C. PORTER	6-9-89 15:10	
Contracting Officer	Proceed as of Date/Time	Contractor

NWMAR127942

Department of Transportation // U.S. Coast Guard // MLCPAC/vpl-1 (5-89)

CHANGE ORDER REQUEST / AUTHORIZATION

Ship	Contract No	Request No	Page 1 of
CGC POLAR SEA (WAGB-11)	DTCG85-89-B-55136	R-063	2

PART I. REQUEST. The COTR certifies that the work described below must be performed during this availability and requests issuance of a Change Order.

CHANGE ORDER SPECIFICATION CHANGE ITEM# D-43 as changed by R-063

TITLE: CPP SYSTEM FLUSHING

Ship's POC: CWO3 FORD/MKCM CARDONA/MKCVOLPE | Ref: CPP 118

Specifications Prepared by:	Date:	COTR Approval:	Date:
R. [illegible] MOORE, ~~LCDR,~~ USCG	6/7/89	J. J. MCCLELLAND, CAPT, ~~USCG~~	June 89

PART II. TECHNICAL APPROVAL, P.R. AND STATEMENT OF ESSENTIAL NEED.

1. Description: See Specification in Part I.
2. Primary Need: [X] GROWTH WORK Add to Basic Item # [ ] NEW WORK Add Item #
3. Impact of Denial: [X] Mission Essential or [ ] Health and Safety

MLC SRD ~~SEATTLE~~ Review:	Date:	(vr) Tech Approval:	Date:	Funds Approval:
D. [illegible] SWAN, LCDR	6/7/89	J. Q. GAMBLE, LCDR, USCG	/	/

FUND CITATION: 40-C-1-9-33- - -

ORIG EST $_____

REV EST $_____

PART III. SETTLEMENT AGREEMENT By signature below the parties agree that this settlement is considered fair and reasonable and that it constitutes full and final equitable adjustment for this change. The contractor releases the Government from any liability under this contract for further equitable adjustments attributable to facts & circumstances or impact of this change.

CONTRACTOR MUST CHECK ONE OF THE FOLLOWING:

[ ] The contract completion date is extended to _____

[X] The contract completion date is not extended because of this change.

SETTLEMENT PRICE: $<18,000.00> | CHANGE ORDER # A-48

J. C. PORTER Contracting Officer	6-9-89 1510 hrs Proceed as of Date/Time	Contractor

PM JUN 13 P 2:15

US COAST GUARD M.L.C.PAC
NAVAL ENGINEERING
PROCUREMENT

Department of Transportation / U.S. Coast Guard // MLCPAC/vc.-1 (5-89)

CHANGE ORDER REQUEST / AUTHORIZATION

Ship	Contract No	Request No	Page 1 of
CGC POLAR SEA (WAGB-11)	DTCG85-89-B-55136	R- 058	2

PART I. REQUEST. The COTR certifies that the work described below must be performed during this availability and requests issuance of a Change Order.

CHANGE ORDER SPECIFICATION CHANGE ITEM# D-09 as changed by R-

TITLE: WASTER PIECE INSPECTION

Ship's POC: MK1 CROCKETT/MK2 BARNETT | Ref DFR: 147

Specifications Prepared by:	Date:	COTR Approval:	Date:
R. A. FONSER LCDR, USCG	6/6/89	J. J. MCCLELLAND, CAPT, USCG	6 Jun 89

PART II. TECHNICAL APPROVAL, P.R. AND STATEMENT OF ESSENTIAL NEED.

1. Description: See Specification in Part I.
2. Primary Need: [X] GROWTH WORK [ ] NEW WORK
   Add to Basic Item # D-09 Add Item #
3. Impact of Denial: [X] Mission Essential or [ ] Health and Safety

MLC 3RD/SEATTLE Review:	Date:	(vr) Tech Approval:	Date:	Funds Approval:
D. L. SWAN, LCDR	6/7/89	J. Q. GAMBLE, LCDR, USCG	/	/

FUND CITATION:
40-D-1-9-33- - -

ORIG EST $_____

REV EST $_____

PART III. SETTLEMENT AGREEMENT By signature below the parties agree that this settlement is considered fair and reasonable and that it constitutes full and final equitable adjustment for this change. The contractor releases the Government from any liability under this contract for further equitable adjustments attributable to facts & circumstances or impact of this change.

CONTRACTOR MUST CHECK ONE OF THE FOLLOWING:

[ ] The contract completion date is extended to _____

[X] The contract completion date is not extended because of this change.

SETTLEMENT PRICE: $ 387.00 | CHANGE ORDER # A- 49

J. C. PORTER Contracting Officer	6-9-89 3:25pm Proceed as of Date/Time	Contractor

1989 JUN 13 P 2:15

US COAST GUARD M.C.P.A.C.
NAVAL ENGINEERING
PROCUREMENT

NWMAR127944

AMENDMENT OF SOLICITATION/MODIFICATION OF CONTRACT

1. CONTRACT ID CODE
PAGE 1 OF PAGES 2

2. AMENDMENT/MODIFICATION NO.: 00011
3. EFFECTIVE DATE: 19 JUN 89
4. REQUISITION/PURCHASE REQ. NO.:
5. PROJECT NO. (If applicable): CGC POLAR SEA

6. ISSUED BY — CODE DTCG85
Commander (vpl)
Maintenance and Logistic Command Pacific
Coast Guard Island, Bldg. 50-7
Alameda, CA 94501-5100

7. ADMINISTERED BY (If other than Item 6) — CODE

8. NAME AND ADDRESS OF CONTRACTOR (No., street, county, State and ZIP Code)
Northwest Marine Iron Works
5555 N. Channel, Bldg.2
Portland, OR 97217 (503) 285-7557

CODE — FACILITY CODE

9A. AMENDMENT OF SOLICITATION NO.
9B. DATED (SEE ITEM 11)
10A. MODIFICATION OF CONTRACT/ORDER NO.: DTCG85-89 C-55136
10B. DATED (SEE ITEM 13): 22 March 1989

11. THIS ITEM ONLY APPLIES TO AMENDMENTS OF SOLICITATIONS

☐ The above numbered solicitation is amended as set forth in Item 14. The hour and date specified for receipt of Offers ☐ is extended, ☐ is not extended.

Offers must acknowledge receipt of this amendment prior to the hour and date specified in the solicitation or as amended, by one of the following methods:

(a) By completing Items 8 and 15, and returning _____ copies of the amendment; (b) By acknowledging receipt of this amendment on each copy of the offer submitted; or (c) By separate letter or telegram which includes a reference to the solicitation and amendment numbers. FAILURE OF YOUR ACKNOWLEDGMENT TO BE RECEIVED AT THE PLACE DESIGNATED FOR THE RECEIPT OF OFFERS PRIOR TO THE HOUR AND DATE SPECIFIED MAY RESULT IN REJECTION OF YOUR OFFER. If by virtue of this amendment you desire to change an offer already submitted, such change may be made by telegram or letter, provided each telegram or letter makes reference to the solicitation and this amendment, and is received prior to the opening hour and date specified.

12. ACCOUNTING AND APPROPRIATION DATA (If required)

13. THIS ITEM APPLIES ONLY TO MODIFICATIONS OF CONTRACTS/ORDERS, IT MODIFIES THE CONTRACT/ORDER NO. AS DESCRIBED IN ITEM 14.

(✓) X A. THIS CHANGE ORDER IS ISSUED PURSUANT TO: (Specify authority) THE CHANGES SET FORTH IN ITEM 14 ARE MADE IN THE CONTRACT ORDER NO. IN ITEM 10A.
Changes FAR 52.243-1 (Alternate II)

B. THE ABOVE NUMBERED CONTRACT/ORDER IS MODIFIED TO REFLECT THE ADMINISTRATIVE CHANGES (such as changes in paying office, appropriation data, etc.) SET FORTH IN ITEM 14, PURSUANT TO THE AUTHORITY OF FAR 43.103(b).

C. THIS SUPPLEMENTAL AGREEMENT IS ENTERED INTO PURSUANT TO AUTHORITY OF:

D. OTHER (Specify type of modification and authority)

E. IMPORTANT: Contractor ☒ is not, ☐ is required to sign this document and return _____ copies to the issuing office.

14. DESCRIPTION OF AMENDMENT/MODIFICATION (Organized by UCF section headings, including solicitation/contract subject matter where feasible.)

SEE ATTACHED

Except as provided herein, all terms and conditions of the document referenced in Item 9A or 10A, as heretofore changed, remains unchanged and in full force and effect.

15A. NAME AND TITLE OF SIGNER (Type or print)
15B. CONTRACTOR/OFFEROR
(Signature of person authorized to sign)
15C. DATE SIGNED

16A. NAME AND TITLE OF CONTRACTING OFFICER (Type or print): JOHN C. PORTER
16B. UNITED STATES OF AMERICA
BY (Signature of Contracting Officer)
16C. DATE SIGNED: 6/19/89

A. Perform the work specified by Change Request R-071, hereto attached.

B. Pursuant to the contract "Changes" clause (FAR 52.243-1 (Alternate II), the Contractor is hereby authorized and directed to proceed with the above changes. Submit a price proposal to this office within 5 days so that an equitable adjustment to the contract may be negotiated.

AMENDMENT OF SOLICITATION/MODIFICATION OF CONTRACT

1. CONTRACT ID CODE

PAGE 1 OF PAGES 2

2. AMENDMENT/MODIFICATION NO.: 00012

3. EFFECTIVE DATE: 20 June 1989

4. REQUISITION/PURCHASE REQ. NO.: USCGC POLAR SEA

5. PROJECT NO. (If applicable)

6. ISSUED BY — CODE

Commander (vpl)
Maintenance and Logisitics Command Pacific
BLDG 50-7, Coast Guard Island
Alameda. CA 94501-5100

7. ADMINISTERED BY (If other than Item 6) — CODE

8. NAME AND ADDRESS OF CONTRACTOR (No., street, county, State and ZIP Code)

Northwest Marine Iron Works
5555 N. Channel Ave
Portland, OR 97802

CODE — FACILITY CODE

(✓) 9A. AMENDMENT OF SOLICITATION NO.

9B. DATED (SEE ITEM 11)

10A. MODIFICATION OF CONTRACT/ORDER NO.

XX DTCG85-89-C-55136

10B. DATED (SEE ITEM 13)

11 April 1989

11. THIS ITEM ONLY APPLIES TO AMENDMENTS OF SOLICITATIONS

☐ The above numbered solicitation is amended as set forth in Item 14. The hour and date specified for receipt of Offers ☐ is extended, ☐ is not extended.

Offers must acknowledge receipt of this amendment prior to the hour and date specified in the solicitation or as amended, by one of the following methods: (a) By completing Items 8 and 15, and returning _____ copies of the amendment; (b) By acknowledging receipt of this amendment on each copy of the offer submitted; or (c) By separate letter or telegram which includes a reference to the solicitation and amendment numbers. FAILURE OF YOUR ACKNOWLEDGMENT TO BE RECEIVED AT THE PLACE DESIGNATED FOR THE RECEIPT OF OFFERS PRIOR TO THE HOUR AND DATE SPECIFIED MAY RESULT IN REJECTION OF YOUR OFFER. If by virtue of this amendment you desire to change an offer already submitted, such change may be made by telegram or letter, provided each telegram or letter makes reference to the solicitation and this amendment, and is received prior to the opening hour and date specified.

12. ACCOUNTING AND APPROPRIATION DATA (If required)

13. THIS ITEM APPLIES ONLY TO MODIFICATIONS OF CONTRACTS/ORDERS, IT MODIFIES THE CONTRACT/ORDER NO. AS DESCRIBED IN ITEM 14.

(✓) X A. THIS CHANGE ORDER IS ISSUED PURSUANT TO: (Specify authority) THE CHANGES SET FORTH IN ITEM 14 ARE MADE IN THE CONTRACT ORDER NO. IN ITEM 10A.

Changes FAR 52.243-1 (Alternate II)

B. THE ABOVE NUMBERED CONTRACT/ORDER IS MODIFIED TO REFLECT THE ADMINISTRATIVE CHANGES (such as changes in paying office, appropriation date, etc.) SET FORTH IN ITEM 14, PURSUANT TO THE AUTHORITY OF FAR 43.103(b).

C. THIS SUPPLEMENTAL AGREEMENT IS ENTERED INTO PURSUANT TO AUTHORITY OF:

D. OTHER (Specify type of modification and authority)

E. IMPORTANT: Contractor ☒ is not, ☐ is required to sign this document and return _____ copies to the issuing office.

14. DESCRIPTION OF AMENDMENT/MODIFICATION (Organized by UCF section headings, including solicitation/contract subject matter where feasible.)

See Attached

Except as provided herein, all terms and conditions of the document referenced in Item 9A or 10A, as heretofore changed, remains unchanged and in full force and effect.

15A. NAME AND TITLE OF SIGNER (Type or print)

16A. NAME AND TITLE OF CONTRACTING OFFICER (Type or print)

John C. Porter, Contracting Officer

15B. CONTRACTOR/OFFEROR — (Signature of person authorized to sign)

15C. DATE SIGNED

16B. UNITED STATES OF AMERICA — BY _____ (Signature of Contracting Officer)

16C. DATE SIGNED 6/20/89

A. Perform the work specified by Change Request R-072, hereto attached.

B. Pursuant to the contract "Changes" clause (FAR 52.243-1 (Alternate II), the Contractor is hereby authorized and directed to proceed with the above changes. Submit a price proposal to this office within 5 days so that an equitable adjustment to the contract may be negotiated.

AMENDMENT OF SOLICITATION/MODIFICATION OF CONTRACT

1. CONTRACT ID CODE: DO-A3 | PAGE 1 OF 1 PAGES

2. AMENDMENT/MODIFICATION NO.	3. EFFECTIVE DATE	4. REQUISITION/PURCHASE REQ. NO.	5. PROJECT NO. (If applicable)
00019	25 JUL 1989		CGC POLAR SEA

6. ISSUED BY CODE DTCG85

COMMANDER(vpl)
MAINTENANCE & LOGISTICS COMMAND PACIFIC
COAST GUARD ISLAND; BLDG. 50-7
ALAMEDA, CA 94501-5100

7. ADMINISTERED BY (If other than Item 6) CODE

8. NAME AND ADDRESS OF CONTRACTOR (No., street, county, State and ZIP Code)

NORTHWEST MARINE IRON WORKS
5555 N. CHANNEL, BLDG. 2
PORTLAND, OR 97217

CODE | FACILITY CODE

(✓) 9A. AMENDMENT OF SOLICITATION NO.

9B. DATED (SEE ITEM 11)

X 10A. MODIFICATION OF CONTRACT/ORDER NO. DTCG85-89-C-55136

10B. DATED (SEE ITEM 13) 25 MAR 1989

11. THIS ITEM ONLY APPLIES TO AMENDMENTS OF SOLICITATIONS

☐ The above numbered solicitation is amended as set forth in Item 14. The hour and date specified for receipt of Offers ☐ is extended, ☐ is not extended.

Offers must acknowledge receipt of this amendment prior to the hour and date specified in the solicitation or as amended, by one of the following methods:

(a) By completing Items 8 and 15, and returning _____ copies of the amendment; (b) By acknowledging receipt of this amendment on each copy of the offer submitted; or (c) By separate letter or telegram which includes a reference to the solicitation and amendment numbers. FAILURE OF YOUR ACKNOWLEDGMENT TO BE RECEIVED AT THE PLACE DESIGNATED FOR THE RECEIPT OF OFFERS PRIOR TO THE HOUR AND DATE SPECIFIED MAY RESULT IN REJECTION OF YOUR OFFER. If by virtue of this amendment you desire to change an offer already submitted, such change may be made by telegram or letter, provided each telegram or letter makes reference to the solicitation and this amendment, and is received prior to the opening hour and date specified.

12. ACCOUNTING AND APPROPRIATION DATA (If required)

40 C 1 9 33 45.00.20 75171 2552 Increase: $2,710.00 New Total: $2,243,307.00

13. THIS ITEM APPLIES ONLY TO MODIFICATIONS OF CONTRACTS/ORDERS, IT MODIFIES THE CONTRACT/ORDER NO. AS DESCRIBED IN ITEM 14.

(✓)
- A. THIS CHANGE ORDER IS ISSUED PURSUANT TO: (Specify authority) THE CHANGES SET FORTH IN ITEM 14 ARE MADE IN THE CONTRACT ORDER NO. IN ITEM 10A.
- B. THE ABOVE NUMBERED CONTRACT/ORDER IS MODIFIED TO REFLECT THE ADMINISTRATIVE CHANGES (such as changes in paying office, appropriation date, etc.) SET FORTH IN ITEM 14, PURSUANT TO THE AUTHORITY OF FAR 43.103(b).
- X C. THIS SUPPLEMENTAL AGREEMENT IS ENTERED INTO PURSUANT TO AUTHORITY OF: BILATERAL AGREEMENT AS SET FORTH ON THE ATTACHED CHANGE REQUEST/AUTHORIZATION FORMS.
- D. OTHER (Specify type of modification and authority)

E. IMPORTANT: Contractor [X] is not, ☐ is required to sign this document and return _____ copies to the issuing office.

14. DESCRIPTION OF AMENDMENT/MODIFICATION (Organized by UCF section headings, including solicitation/contract subject matter where feasible.)

AGREEMENT #	REQUEST #	BASIC ITEM #	AMOUNT
A-74	R-088	D-43	$2,710.00

Except as provided herein, all terms and conditions of the document referenced in Item 9A or 10A, as heretofore changed, remains unchanged and in full force and effect.

15A. NAME AND TITLE OF SIGNER (Type or print)

16A. NAME AND TITLE OF CONTRACTING OFFICER (Type or print)
JOHN C. PORTER

15B. CONTRACTOR/OFFEROR | 15C. DATE SIGNED | 16B. UNITED STATES OF AMERICA | 16C. DATE SIGNED

(Signature of person authorized to sign)

BY _____ (Signature of Contracting Officer) 7/25/89

NSN 7540-01-152-8070
PREVIOUS EDITION UNUSABLE

30-105

STANDARD FORM 30 (REV. 10-83)
Prescribed by GSA
FAR (48 CFR) 53.243

NWMAR127949

NORTHWEST MARINE IRON WORKS

MAILING ADDRESS: P.O. BOX 3109
PORTLAND, OR 97208

5555 N. CHANNEL AVE., BLDG. 2
PORTLAND, OREGON 97217

PHONE: (503) 285-7557

TWX: 910-464-6107 NORMARINE PTL

August 29, 1989

EXXON Shipping Company
c/o NASSCO
P.O. Box 85278
San Diego, CA 92138

Attention: Mr. Steve Day

Subject: EXXON BATON ROUGE Guarantee Repairs

Reference: EXXON Fax Dated 8/3/89
EXXON Letter Dated 8/11/89

Dear Mr. Day:

On August 21, 1989, Mr. W. Dixon, one of our machinery foremen, attended the "EXXON BATON ROUGE" in the San Francisco area to supervise installation of the right angle gear drive and the change out of one IGS fan runner.

Unfortunately, the right angle gear drive did not perform properly and was taken back off of the vessel and sent to Conhagen's shop for repairs and adjustments. Conhagen has been instructed to reinstall the gear drive when the vessel returns to the bay area.

Northwest Marine recognizes that the cargo pump right angle gear drive is a guarantee item. However, based on review of the work performed by the shipyard to the IGS fans and the condition that they were found onboard the vessel at the time of Mr. Dixon's inspection, it is Northwest Marine's position that the failure was not caused by the shipyard.

Our reasoning follows:

A. Only one (1) bearing between the two blowers was opened by the shipyard. The runners were removed with bearing attached.

B. The small tubing for oil to bearing was removed from the turned down 90° fitting at the bearing base. These lines were cleaned and flushed by the shipyard and reinstalled.

C. The EXXON representative was informed of the condition of the runners during the shipyard period. It was decided to reassemble as is and that the crew would lubricate the bearings.

D. The inspection by Mr. Dixon showed that the bearings and shaft scoring was due to lack of lubrication.

E. Due to the lubrication arrangement, more specifically, the vent on the bearing cap, the opening is so small (less than 1/16") that is will not vent fast enough while filling through the bubbler to insure that there is the proper amount of lubricate in the bearing before the bubbler fills up. The only way to insure that the bearings are lubricated properly would be to remove the bearing caps and pour oil over the bearings.

F. Upon Mr. Dixon's inspection of the tubing, he found oil and metal particles, not sandblast grit; particles caused by the bearings and shaft deterioration from lack of lubrication.

Based on the above, Northwest Marine feels that they should be compensated for all costs involved with the change out of the IGS runner on the "EXXON BATON ROUGE" while in the San Francisco Bay area.

When these costs are compiled, we will forward them to you so we may discuss them.

Sincerely,

Ivan G. Chandler

Ivan G. Chandler
Project Manager

cc: H. Leyendecker (Houston)
R. Tompkins (Benicia)

A DIVISION OF SOUTHWEST MARINE, INC.
P.O. Box 3109 • Portland • Oregon • 97208 • 5555 N. Channel Ave. • Bldg 2 • Portland • Oregon • 97217
(503) 285-7557 • TWX: 910-464-6107 NORMARINE PTL • FAX: (503) 240-6600

NORTH WEST MARINE INC.

April 25, 1990

Exxon Shipping
800 Bell Street
Houston, Texas 77002-7426

Attention: Herb Leyendecker

Gentlemen:

Enclosed is our Invoice 1071.09, final billing for the EXXON BATON ROUGE for the 1989 shipyard overhaul.

We appreciate the opportunity of working with you.

Sincerely,

Ivan Chandler

Ivan Chandler
Commercial Accounts Manager

MAIL PAYMENT TO: P.O. BOX 4000-58 • PORTLAND • OREGON • 97208

NORTH WEST MARINE INC.

INVOICE

Exxon Shipping
800 Bell Street
Houston, Texas 77002-7426

Attention: Herb Leyendecker

DATE	4/25/90
OUR JOB NO.	4705
CUSTOMER'S ORDER NO.	
CONTRACT NO.	
INVOICE NO.	1071.09
TERMS	Net 30 days

CUSTOMER CODE NUMBER:

Duns No. 00-902-8580

EXXON BATON ROUGE
FINAL BILLING

Final agreed price for "EXXON BATON ROUGE"
1989 shipyard overhaul

Total Job Price	$3,983,082.00
Less Progress Payments	
No. 1	(584,987.00)
No. 2	(672,415.00)
No. 3	(930,988.00)
No. 4	(540,668.00)
No. 5	(312,908.00)
Retainage Billing	(759,204.00)
Total Amount Due This Invoice	$ 181,912.00

PAST DUE PAYMENTS SHALL BEAR INTEREST AT THE HIGHEST LAWFUL RATE UNTIL REPAID, NOT TO EXCEED 1 1/2% PER MONTH

CORRESPONDENCE ADDRESS : P.O. BOX 3108 • PORTLAND • OREGON • 97208 PHONE: (503) 285-7557

EXXON BATON ROUGE
JOB NO. 4705

ITEM	TITLE/DESCRIPTION		AMOUNT
001	SERVICES		
	1.	COOLING WATER	$ 798
	2.	COMPRESSED AIR	814
	3.	FRESH WATER	798
	4.	GARBAGE REMOVAL	634
	5.	GROUND WIRE	772
	6.	GUARD SERVICES (Bid note)	-
	7.	E/R SPACES & BILGES	10,094
	8.	MOORING & LINE HANDLE	5,074
	9.	TELEPHONES	1,142
	10.	PAPER & CLEANING	4,334
	11.	COATED MATERIAL SAFETY	12,198
	12.	SHIPS STORES	included
	13.	OWNERS MATERIAL	1,786
	14.	SHORE CURRENT	17,168
	15.	SHORE STEAM	1,329
	16.	SLOPS	30,314
	17.	STOCKINGS	1,575
	18.	TEMP BILGE PUMPS	8,129
	19.	TEMP FIRE HOSE PROTECTION	2,082
	20.	TEMPORARY HEATERS	6,501
	21.	TUGS & PILOTS	26,425
	22.	BERTHAGE	16,746
	23.	ENVIRONMENTAL BOOM	no charge
	24.	DOCK TRIALS	1,015
	25.	SKY LIGHT REMOVAL	1,120
	26.	CO_2 SYSTEM	793
	27.	WET BERTH (Bid note)	-
	28.	UNSPECIFIED SERVICES	146,035

ORIGINAL BID PRICE:	$297,676
F.O. # 83: Extra telephone	355
F.O. #326: Activate shore steam credit for slops	(29,379)
F.O. #337: Wet berth extra days	79,802
TOTAL ITEM PRICE	$348,454

EXXON BATON ROUGE
JOB NO. 4705

ITEM	TITLE/DESCRIPTION	AMOUNT
002	GAS FREE	$ 40,103

ORIGINAL BID PRICE:	$40,103
F.O. #338: Gas free add'l days	13,370
TOTAL ITEM PRICE	$53,473

EXXON BATON ROUGE
JOB NO. 4705

ITEM	TITLE/DESCRIPTION	AMOUNT
036	COATING CARGO TANKS PART I	$138,742

ORIGINAL BID PRICE:	$138,742
F.O. #167: Tank coating 5S	5,670
F.O. #242: Cancel 2 wings	(23,123)
F.O. #282: Modify tank coating	5,130
Impact Adjustment	12,020
TOTAL ITEM PRICE	$128,179

EXXON BATON ROUGE
JOB NO. 4705

ITEM	TITLE/DESCRIPTION		AMOUNT
101	STEEL REPAIRS		
	PART I		
	A	FP TNK	$ 52,130
	B	1STB CO TNK	3,139
	C	IC CO TNK	602
	D	IP CO TNK	3,402
	E	2SF CO TNK	2,121
	F	2SA CO TNK	1,163
	G	2C CO TNK	3,322
	H	2PF CO TNK	6,762
	I	3S BAL TNK	3,277
	J	3C CO TNK	659
	K	3P BAL TNK	125,269
	L	4SF CO TNK	1,332
	M	4C CO TNK	5,060
	N	4PF CO TNK	2,023
	O	5C CO TNK	6,440
	P	6S BAL TNK	18,779
	Q	6P BAL TNK	7,982
	R	7S BAL TNK	2,669
	S	7P BAL TNK	2,606

ORIGINAL BID PRICE:	$248,737
F.O. # 78: Steel repairs	103,010
F.O. # 85: Steel repairs	36,500
F.O. # 87: Steel repairs	27,824
F.O. #124: Steel repairs	6,505
F.O. #134: Steel repairs	99,191
F.O. #136: Steel repairs	5,947
F.O. #137: Steel repairs	5,480
F.O. #138: Steel repairs	8,800
F.O. #175: Steel repairs fore peak	20,702
F.O. #183: Steel repairs 6 stbd	31,296
F.O. #189: Steel repairs O.T.	840
F.O. #219: Steel repairs 5 ctr 6 stbd	11,458
F.O. #234: Steel repairs	10,000
F.O. #243: Steel repairs	4,221
F.O. #268: Add'l steel fractures	3,526
F.O. #298: Remove B ball hoop	1,785
Impact Adjustment	27,400
TOTAL ITEM PRICE	$653,222

EXXON BATON ROUGE
JOB NO. 4705

ITEM	TITLE/DESCRIPTION	AMOUNT
102	MISC HULL DAMAGE	
	PART I	
	A	$ 946
	B	4,600
	C	1,819
	D	1,445
	E	12,278
	F	3,375

ORIGINAL BID PRICE:	$24,463
F.O. #174: Misc hull damage	915
Impact Adjustment	3,110
TOTAL ITEM PRICE	$28,488

EXXON BATON ROUGE
JOB NO. 4705

ITEM	TITLE/DESCRIPTION	AMOUNT
103	HULL DAMAGE PORT BOW	
	A	$ 9,341
	B	83,986
	C	2,447
	D	30,472

ORIGINAL BID PRICE:	$126,246
F.O. #184: Port bow damage	3,524
F.O. #267: Weld "E" on port bow	265
Impact Adjustment	15,552
TOTAL ITEM PRICE	$145,587

EXXON BATON ROUGE
JOB NO. 4705

ITEM	TITLE/DESCRIPTION	AMOUNT
113	CARGO PIPING ON DECK	
	PART I	
	1	$ 1,675
	2	14,227

ORIGINAL BID PRICE:	$15,902
F.O. # 74: Cargo pipe on dk extra	5,963
F.O. #117: Local welding	4,873
F.O. #150: Cargo pipe on dk	11,213
F.O. #182: Cargo pipe on dk 16'	11,645
F.O. #289: Weld 16" drop elbow	2,815
F.O. #303: Crop and realign flange	2,940
F.O. #328: "C" MCP relign line	858
Impact Adjustment	3,000
TOTAL ITEM PRICE	$59,209

EXXON BATON ROUGE
JOB NO. 4705

ITEM	TITLE/DESCRIPTION	AMOUNT
125	WATERTIGHT DOORS & HATCHES	
	PART I	
	A	$ 11,995
	B	16,996
	C	12,254
	D	6,164
	E	1,388

ORIGINAL BID PRICE:	$48,797
F.O. #144: W.T. doors	12,919
F.O. #218: W.T. doors clarify	4,362
F.O. #233: W.T. doors F.O. hatches	1,818
F.O. #244: F.O. hatch crop renew	536
F.O. #256: Swing bolts and staples	-0-
F.O. #291: Install door clasps	6,410
Impact Adjustment	6,124
TOTAL ITEM PRICE	$80,966

EXXON BATON ROUGE
JOB NO. 4705

ITEM	TITLE/DESCRIPTION	AMOUNT
145	UPPER DECK COATING	
	I A	$ 23,360
	B	37,819
	C	11,204
	II THRU IV	6,871

ORIGINAL BID PRICE:	$ 79,258
F.O. #128: Upper dk coating inst	10,617
F.O. #190: Upper dk coating inst	3,112
F.O. #241: Upper dk coating cancel	(6,875)
F.O. #281: Sand sweep dk area	49,324
Reblast Zone #	15,000
Impact Adjustment	37,133
TOTAL ITEM PRICE	$201,315

EXXON BATON ROUGE
JOB NO. 4705

ITEM	TITLE/DESCRIPTION	AMOUNT
172	DK HYDRAULIC PIPE RENEWALS PART I	$144,671

ORIGINAL BID PRICE:	$144,671
F.O. # 57: Extra dk hyd piping	9,763
F.O. #178: Deck hyd piping	3,890
F.O. #191: Deck hyd piping	2,990
F.O. #297: Renew 4" return line	9,227
F.O. #320: Replace spool #4	3,912
TOTAL ITEM PRICE	$174,453

EXXON SHIPPING
800 BELL STREET
HOUSTON, TEXAS 77002-7426
ATTN: HERB LEYBURDEKER

APRIL 25, 1990
JOB 4705
INVOICE: 4705-9
NET:

EXXON BATON ROUGE

FINAL BILLING

FINAL AGREED PRICE FOR "EXXON BATON ROUGE" 1989 SHIPYARD OVERHAUL.

TOTAL JOB PRICE	$ 3,983,082.00
LESS PROGRESS PAYMENTS	
NO. 1	<584,987>
NO. 2	<672,415>
NO. 3	<930,988>
NO. 4	<540,668>
NO. 5	<312,908>
RETAINAGE BILLING	<759,204>
TOTAL AMOUNT DUE THIS INVOICE:	$ 181,912.00

EXXON BATON ROUGE
JOB NO. 4705

ITEM	TITLE/DESCRIPTION	AMOUNT
036	COATING CARGO TANKS PART I	$138,742

ORIGINAL BID PRICE:	$138,742
F.O. #167: Tank coating 5S	5,670
F.O. #242: Cancel 2 wings	(23,123)
F.O. #282: Modify tank coating	5,130
IMPACT ADJUSTMENT	12,020
TOTAL ITEM PRICE	~~$116,159~~
	128,179

EXXON BATON ROUGE
JOB NO. 4705

ITEM	TITLE/DESCRIPTION	AMOUNT
101	STEEL REPAIRS	
	PART I	
A	FP TNK	$ 52,130
B	1STB CO TNK	3,139
C	IC CO TNK	602
D	IP CO TNK	3,402
E	2SF CO TNK	2,121
F	2SA CO TNK	1,163
G	2C CO TNK	3,322
H	2PF CO TNK	6,762
I	3S BAL TNK	3,277
J	3C CO TNK	659
K	3P BAL TNK	125,269
L	4SF CO TNK	1,332
M	4C CO TNK	5,060
N	4PF CO TNK	2,023
O	5C CO TNK	6,440
P	6S BAL TNK	18,779
Q	6P BAL TNK	7,982
R	7S BAL TNK	2,669
S	7P BAL TNK	2,606

ORIGINAL BID PRICE:		$248,737
F.O. # 78: Steel repairs		103,010
F.O. # 85: Steel repairs		36,500
F.O. # 87: Steel repairs		27,824
F.O. #124: Steel repairs		6,505
F.O. #134: Steel repairs		99,191
F.O. #136: Steel repairs		5,947
F.O. #137: Steel repairs		5,480
F.O. #138: Steel repairs		8,800
F.O. #175: Steel repairs fore peak		20,702
F.O. #183: Steel repairs 6 stbd		31,296
F.O. #189: Steel repairs O.T.		~~1,288~~ 840
F.O. #219: Steel repairs 5 ctr 6 stbd		11,458
F.O. #234: Steel repairs		10,000
F.O. #243: Steel repairs		4,221
F.O. #268: Add'l steel fractures		3,526
F.O. #298: Remove B ball hoop		1,785
Impact adjustment		27,400
TOTAL ITEM PRICE		~~$626,270~~
		653,222

EXXON BATON ROUGE
JOB NO. 4705

ITEM	TITLE/DESCRIPTION	AMOUNT
102	MISC HULL DAMAGE	
	PART I	
	A	$ 946
	B	4,600
	C	1,819
	D	1,445
	E	12,278
	F	3,375

ORIGINAL BID PRICE:	$24,463
F.O. #174: Misc hull damage	915
Impact Adjustment	3,110
TOTAL ITEM PRICE	~~$25,378~~
	28,488

EXXON BATON ROUGE
JOB NO. 4705

ITEM	TITLE/DESCRIPTION	AMOUNT
103	HULL DAMAGE PORT BOW	
	A	$ 9,341
	B	83,986
	C	2,447
	D	30,472

ORIGINAL BID PRICE:	$126,246
F.O. #184: Port bow damage	3,524
F.O. #267: Weld "E" on port bow	265
IMPACT ADJUSTMENT	15,552
TOTAL ITEM PRICE	$130,035

145,587

EXXON BATON ROUGE
JOB NO. 4705

ITEM	TITLE/DESCRIPTION	AMOUNT
113	CARGO PIPING ON DECK	
	PART I	
	1	$ 1,675
	2	14,227

ORIGINAL BID PRICE:	$15,902
F.O. # 74: Cargo pipe on dk extra	5,963
F.O. #117: Local welding	4,873
F.O. #150: Cargo pipe on dk	11,213
F.O. #182: Cargo pipe on dk 16'	11,645
F.O. #289: Weld 16" drop elbow	2,815
F.O. #303: Crop and realign flange	2,940
F.O. #328: "C" MCP relign line	858
Impact adjustment	3,000
TOTAL ITEM PRICE	~~$56,209~~

59,209

EXXON BATON ROUGE
JOB NO. 4705

ITEM	TITLE/DESCRIPTION	AMOUNT
125	WATERTIGHT DOORS & HATCHES	
	PART I	
	A	$ 11,995
	B	16,996
	C	12,254
	D	6,164
	E	1,388

ORIGINAL BID PRICE:	$48,797
F.O. #144: W.T. doors	12,919
F.O. #218: W.T. doors clarify	4,362
F.O. #233: W.T. doors F.O. hatches	1,818
F.O. #244: F.O. hatch crop renew	536
F.O. #256: Swing bolts and staples	-0-
F.O. #291: Install door clasps	6,410
IMPACT ADJUSTMENT	6124
TOTAL ITEM PRICE	~~$74,842~~
	80,966

EXXON BATON ROUGE
JOB NO. 4705

ITEM	TITLE/DESCRIPTION	AMOUNT
145	UPPER DECK COATING	
	I A	$ 23,360
	B	37,819
	C	11,204
	II THRU IV	6,871

ORIGINAL BID PRICE:	$ 79,258
F.O. #128: Upper dk coating inst	10,617
F.O. #190: Upper dk coating inst	3,112
F.O. #241: Upper dk coating cancel	(6,875)
F.O. #281: Sand sweep dk area	49,324
REBLAST ZONE #	15,000
TOTAL ITEM PRICE	~~$149,182~~
IMPACT ADJUSTMENT	37,133
	201,315

NORTHWEST MARINE IRON WORKS

MAILING ADDRESS: P.O. BOX 3109
PORTLAND, OR 97208

5555 N. CHANNEL AVE., BLDG. 2
PORTLAND, OREGON 97217

PHONE: (503) 285-7557

TWX: 910-464-6107 NORMARINE PTL

October 6, 1989

EXXON Shipping
800 Bell Street
Houston, Texas 77002-7426

Attention: Mr. H. Leyendecker

Subject: S/S EXXON "BATON ROUGE" Invoice - Retainage

Dear Herb:

Please find attached corrected item prices and a revised summary sheet, as discussed with you on Thursday, October 5, 1989.

We appreciate your attention in this matter.

Best regards,

Ivan G. Chandler

Ivan G. Chandler
Project Manager

NORTHWEST MARINE IRON WORKS

SHIP REPAIRERS
GENERAL MACHINE WORK
ENGINEERING

MAIL PAYMENT TO:
P.O. BOX 4000-58
PORTLAND, OREGON 97208

INVOICE

EXXON Shiping
800 Bell Street
Houston, Texas 77002-7426

DATE October 6, 1989
OUR JOB NO. 4705
CUSTOMER'S ORDER NO.
CONTRACT NO.
INVOICE NO. 4705-8
TERMS Net

CUSTOMER CODE NUMBER:

Duns No. 00-902-8580

EXXON BATON ROUGE
RETAINAGE BILLING

Retainage on agreed work items for the EXXON "BATON ROUGE" shipyard overhaul. Please see attached page.

Total Amount Due This Invoice $759,204.00

PAST DUE PAYMENTS SHALL BEAR INTEREST AT THE HIGHEST LAWFUL RATE UNTIL REPAID, NOT TO EXCEED 1½% PER MONTH.

CORRESPONDENCE ADDRESS P.O. BOX 3109 PORTLAND, OREGON 97208 PHONE (503) 285-7557

NWMAR127973

EXXON BATON ROUGE

TOTAL JOB PRICE:	$4,280,348.00
Less: Impact Costs*	(416,157.00)
Outstanding Issue Items **	(63,021.00)
Progress Payments:	
No. 1	(584,987.00)
No. 2	(672,415.00)
No. 3	(930,988.00)
No. 4	(540,668.00)
No. 5	(312,908.00)
RETAINAGE REMAINING ON AGREED WORK:	$ 759,204.00

* Cost overruns on major original items impacted due to inordinate job growth in critical work items and areas.

** Outstanding Issue Items:

Item 001	F.O. #337 Extra Days	$ 46,240.00
Item 002	F.O. #338 Additional Days	5,730.00
Item 101K	F.O. #189 Overtime	1,288.00
Item 172A	F.O. # 57 Extra Dk Hyd Pipe	9,763.00
		$ 63,021.00

NORTHWEST MARINE IRON WORKS

SHIP REPAIRERS
GENERAL MACHINE WORK
ENGINEERING

MAIL PAYMENT TO:
P.O. BOX 4000-58
PORTLAND, OREGON 97208

INVOICE

EXXON Shiping
800 Bell Street
Houston, Texas 77002-7426

DATE October 6, 1989
OUR JOB NO. 4705
CUSTOMER'S ORDER NO.
CONTRACT NO.
INVOICE NO. 4705-7
TERMS Credit

CUSTOMER CODE NUMBER:

Duns No. 00-902-8580

EXXON BATON ROUGE
RETAINAGE BILLING

To cancel invoice number 4705-6 issued on October 3, 1989

Total Amount Credit Due ($757,378)

PAST DUE PAYMENTS SHALL BEAR INTEREST AT THE HIGHEST LAWFUL RATE UNTIL REPAID, NOT TO EXCEED 1½% PER MONTH.

CORRESPONDENCE ADDRESS P.O. BOX 3109 PORTLAND, OREGON 97208 PHONE (503) 285-7557

NWMAR127975

NORTHWEST MARINE IRON WORKS

MAILING ADDRESS: P.O. BOX 3109
PORTLAND, OR 97208

5555 N. CHANNEL AVE., BLDG. 2
PORTLAND, OREGON 97217

PHONE: (503) 285-7557

TWX: 910-464-6107 NORMARINE PTL

October 3, 1989

Exxon Shipping
800 Bell Street
Houston, Texas 77002-7426

Attention: Mr. H. Leyendecker

Subject: S/S "BATON ROUGE" Invoice - Retainage

Dear Herb:

Please find attached our invoice for retainage on agreed items. Included also is one set of priced items. The remaining copies, due to the size, will be shipped by UPS.

As you are aware, four (4) field order changes have not been agreed to at this time. They have been priced (see summary sheet) but are not included in the retainage amount.

In addition, you will note that Northwest Marine has added a separate line price for impact costs. This is an outstanding item that needs to be discussed and resolved as soon as possible.

Northwest Marine is available to sit down and discuss these items at Exxon's convenience.

Sincerely,

Ivan Chandler

Ivan G. Chandler
Project Manager

NORTHWEST MARINE IRON WORKS

SHIP REPAIRERS
GENERAL MACHINE WORK
ENGINEERING

MAIL PAYMENT TO:
P.O. BOX 4000-58
PORTLAND, OREGON 97208

INVOICE

EXXON Shipping
800 Bell Street
Houston, Texas 77002-7426

Attention: Mr. H. Leyendecker

CUSTOMER CODE NUMBER:

DATE	October 3, 1989
OUR JOB NO.	4705
CUSTOMER'S ORDER NO.	
CONTRACT NO.	
INVOICE NO.	4705-6
TERMS	Net

Duns No. 00-902-8580

EXXON BATON ROUGE

RETAINAGE BILLING

Retainage on agreed work items for
the EXXON "BATON ROUGE" shipyard
overhaul. Please see attached page.

Total amount due this invoice $757,378

PAST DUE PAYMENTS SHALL BEAR INTEREST AT THE HIGHEST LAWFUL RATE UNTIL REPAID, NOT TO EXCEED 1½% PER MONTH.

CORRESPONDENCE ADDRESS P.O. BOX 3109 PORTLAND, OREGON 97208 PHONE (503) 285-7557

NWMAR127977

EXXON BATON ROUGE

TOTAL JOB PRICE:		$4,278,522.00
Less:	Impact Costs*	(416,157.00)
	Outstanding Issue Items**	(63,021.00)
	Progress Payments:	
	No. 1	(584,987.00)
	No. 2	(672,415.00)
	No. 3	(930,988.00)
	No. 4	(540,668.00)
	No. 5	(312,908.00)
RETAINAGE REMAINING ON AGREED WORK:		$ 757,378.00

* Cost overruns on major original items impacted due to inordinate job growth in critical work items and areas.

** Outstanding Issue Items:

Item 001	F.O. # 337	Extra Days	$ 46,240.00
Item 002	F.O. # 338	Additional Days	5,730.00
Item 101K	F.O. # 189	Overtime	1,288.00
Item 172A	F.O. # 57	Extra Dk Hyd Pipe	9,763.00
			$ 63,021.00

NORTHWEST MARINE IRON WORKS

MAILING ADDRESS: P.O. BOX 3109
PORTLAND, OR 97208

5555 N. CHANNEL AVE., BLDG. 2
PORTLAND, OREGON 97217

PHONE: (503) 285-7557

TWX: 910-464-6107 NORMARINE PTL

September 28, 1989

EXXON Shipping Company
P.O. Box 85278
San Diego, CA 92138

Attention: Mr. Steve Day

Subject: S/S "EXXON BATON ROUGE" Outstanding Issues

Reference: EXXON Shipping Company Letter Dated August 11, 1989

Dear Mr. Day:

After reviewing your letter and considering EXXON's position in regards to the outstanding issues, Northwest Marine offers the following comments:

A. Item 101K Steel Repair Overtime

Northwest Marine agrees that according to the way that the Field Order 189 was written, the $840.00 is an acceptable price only for the men that worked the steel repair overtime on 6/30 swing shift and on 7/1 day shift.

This amount, however, does not begin to cover the costs of moving men and equipment from other steel work or the delay and disruption of our work schedules to accommodate EXXON's request to concentrate on the longitudinal bulkhead and other new repairs while on drydock.

In addition, the extra ordinary growth in the steel repair items (well over 50%) did, in fact, adversely affect the original steel work causing substantial overruns in man hours. It is of Northwest Marine's opinion that these cost overruns need to be discussed and compensated for by EXXON.

B. Item 145 Deck Coating

At the time of negotiations of this item, EXXON was informed that there were additional costs to be discussed and agreed to in order to satisfy the deck coating work item.

In the first place, EXXON requested that we change our schedule of blasting and coating to better accommodate how EXXON felt the schedule should be. This change had a cascading effect on all major deck and tank repair items.

The running out of house paint delayed painting the section forward of the house due to the possibility of overspray.

Sleeving hydraulic piping rather than renewing affected blasting and coating.

If Northwest Marine had not agreed to blast and coat more of the deck, we wouldn't have ended up reblasting Zone 3 due to weather, yet EXXON doesn't want to assume any responsibility or even share in the costs of reblasting. It kind of sounds like "Do your best for EXXON, but if there's a problem, we (EXXON) don't want to accept any responsibility".

Again, this item was impacted greatly due to work growth on deck items and scheduling change causing cost overruns. These overruns need to be discussed, agreed to, and compensation made to Northwest Marine.

C. Item 172A Hydraulic Piping

Based on two independent estimates, my own and George Riddle's, we both came within four hundred dollars in additional costs to sleeve the piping rather than renewing it. These costs do not include the impact costs of delay and disruption involved in sequencing and scheduling the hydraulic item with other deck work.

Please find enclosed our estimates detailing credits and additional costs.

In consideration of extra days and liquidated damages, the following comments apply:

A. Early in the project, EXXON was notified in writing that additional days would be required based on the work scope at the time. EXXON refused to recognize that the days requested were legitimate.

B. Although EXXON cancelled several thousand man hours in items, they were generally items that were not affecting the critical path. In fact, for the most part, the additional work and its release to the yard did affect the critical path and redelivery schedule.

C. The total work scope increased approximately 100% from arrival to departure. It is standard in the industry to accomplish 20% growth in the same time period, not 100%.

D. EXXON decided to stay extra days to get all of the deck coating done and ensure that the vessel was ready to depart.

It is Northwest Marine's opinion that every effort was made to accommodate EXXON and deliver the vessel at the earliest possible date. Northwest Marine is currently compiling a final invoice that will include prices for outstanding

issue items. We are willing to sit down and discuss these items, however, we would like to be paid the retainage for all agreed items.

Sincerely,

Ivan Chandler

Ivan G. Chandler
Project Manager

cc: Herb Leyendecker
Bill Johnston
Don Nugent

NORTHWEST MARINE IRON WORKS – PORTLAND, OREGON

COMMERCIAL ESTIMATE FOR: Exxon Baton Rouge. BY: Fuddle DATE: 9-26-89 PAGE: 1 OF: 2

ITEM	TITLE/DESCRIPTION/SUB-NAME	TR 1	PS 2	MA 3	RG 4	BM 5	PF 6	EL 7	FA 9	WH 11	CA 12	SM 15	LA 17	TOTAL HRS	MAT'L	SUBS	POP	BID PRICE
172-A	Deck Hydraulic Piping																	
	(11) sections of 4" sch. 160 pipe																	
	with flanged joints. (say 20' av)																	
	handle to shop./return.													10	–	–	–	
	fabricate targets (for exp. ones only) (3)													12	10	–	–	
	fabricate straight sections: (8)													64	–	–	–	
	4" sch. 160 pipe 160'-0" x 21.00													–	3360	–	–	
	S.O. flanges. (16) x 60" (300 lb)													–	960	–	–	
	fabricate exp. sections (3)													192	–	–	–	
	4" sch. 160 pipe 60' x 21"													–	1260	–	–	
	S.O. flanges (6) x 60"													–	360	–	–	
	fittings (12) x 38"													–	456	–	–	
	X-RAY OF WELDS													–	–	1650		
	Shop fabrication / NEW.													278	6406	1650	–	–
														30	–	–	5.7	17,172 CREDIT
	PRICE FOR SLEEVING PIPE 26,935"																	
	CREDIT FOR NOT BUILDING PIPE (17,172)																	
	TOTAL △ $ 9,763																	
	ITEM/PAGE TOTALS																	

NORTHWEST MARINE IRON WORKS – PORTLAND, OREGON

COMMERCIAL ESTIMATE FOR: Exxon Baton Rouge BY: Liddle DATE: PAGE: 2 OF: 2

ITEM	TITLE/DESCRIPTION/SUB-NAME	TR 1	PS 2	MA 3	RG 4	BM 5	PF 6	EL 7	FA 9	WH 11	CA 12	SM 15	LA 17	TOTAL HRS	MAT'L	SUBS	POP	BID PRICE
172-A.	Deck Hydraulic Piping																	
a.	remove : same as "renewal" cost													—	—	—	—	
b.	sandblast at hangers:																	
	30 locations x 3 men x ½ hr													45	—	-	-	
	protection place/removal													16	25	-	-	
	grit supply 2 tons x 80													—	160	-	-	
	grit clean up.													32	20	-	-	
c	reinstall sections: same as a.)													—	—	—	—	
	crop/renew pipe hangers (30)													64	450	-	-	
	and support blkts													96	300	-	-	
d.	fabricate sleeves. 6" x 5/8 wall tubing													—	—	—	-	
	(19) x 1.0' = say 20' length x 35													—	750	-	-	
	cut to length													24	15	-	-	
	machine grooves to part.													164	20	-	-	
	clean pipe sections to allow ~~w~~													44	50	-	-	
	blast exterior where sleeved.													80	200	-	-	—
	install sleeves 19 x 12													228	350	-	-	
	Sleeves.													~~643~~ 644	~~2340~~ 2135	-	-	
	Excluding "disruption"													35	1.157			26,935
	ITEM/PAGE TOTALS																	

NWMAR127983

NORTHWEST MARINE IRON WORKS

MAILING ADDRESS: P.O. BOX 3109
PORTLAND, OR 97208

5555 N. CHANNEL AVE., BLDG. 2
PORTLAND, OREGON 97217

PHONE: (503) 285-7557

TWX: 910-464-6107 NORMARINE PTL

August 31, 1989

EXXON Shipping Company
800 Bell Street
Houston, Texas 77002-7426

Attention: Mr. H. P. Leyendecker

Subject: EXXON BATON ROUGE

Dear Herb:

In accordance with the contract terms, we have prepared and hereby submit our Progress Billing No. 5.

The estimated contract value is figures negotiated by your repair superintendent, Steve Day. The actual contract value is unknown at this time due to pending negotiations of outstanding items.

Very truly yours,

Ivan G Chandler

Ivan G. Chandler
Project Manager

cc: B. Johnston
Steve Day (EXXON Shipping Co.)

NORTHWEST MARINE IRON WORKS

SHIP REPAIRERS
GENERAL MACHINE WORK
ENGINEERING

MAIL PAYMENT TO:
P.O. BOX 4000-58
PORTLAND, OREGON 97208

INVOICE

"EXXON BATON ROUGE" and Owners
c/o EXXON Shipping Company
800 Bell Street
Houston, Texas 77002-7426

DATE	August 31, 1989
OUR JOB NO.	4705
CUSTOMER'S ORDER NO.	
CONTRACT NO.	
INVOICE NO.	4705-5
TERMS	Net

CUSTOMER CODE NUMBER:

Duns No. 00-902-8580

"EXXON BATON ROUGE"
Progress Billing Number 5

Contract Value to August 1, 1989	$3,802,458.00
Less 20% Retention	(760,492.00)
	$3,041,966.00
Less Progress Payment No. 1	584,987.00
Progress Payment No. 2	672,415.00
Progress Payment No. 3	930,988.00
Progress Payment No. 4	540,668.00
Total Amount Due This Invoice	$ 312,908.00

Please wire transfer payment to:

Northwest Marine Iron Works
c/o First Interstate Bank of Oregon
N.W. 29th and Yeon Branch
Portland, Oregon
Account No. 552-001522-9

EXXON Repair Superintendent

Approval_____

PAST DUE PAYMENTS SHALL BEAR INTEREST AT THE HIGHEST LAWFUL RATE UNTIL REPAID, NOT TO EXCEED 1½% PER MONTH.

CORRESPONDENCE ADDRESS P.O. BOX 3109 PORTLAND, OREGON 97208 PHONE (503) 285-7557

NORTHWEST MARINE IRON WORKS

MAILING ADDRESS P.O. BOX 3106
PORTLAND, OR 97208

5555 N. CHANNEL AVE., BLDG. 2
PORTLAND, OREGON 97217

PHONE (503) 285-7557

TWX: 910-464-6107 NORMARINE PTL

TELECOPIER COVER LETTER

TELEFAX NO. (619) 231-8676 DATE 8-31-89

MESSAGE TO BE SENT TO (RECIPIENT'S NAME) MR STEVEN DAY

AT (COMPANY) EXXON SHIPPING COMPANY, FIELD OFFICE - SAN DIEGO

SENDER'S NAME IVAN CHANDLER

NUMBER OF PAGES (INCLUDING COVER SHEET) 3

REFERENCE (IF APPLICABLE) NA

****

IF YOU DID NOT RECEIVE ALL OF THE PAGES, PLEASE CALL DOCUMENT CONTROL DEPT. AT 503/285-7557, EXT 551.

WHEN SENDING TELECOPIED MESSAGES, PLEASE CALL 503/240-6600

****

N350

NORTHWEST MARINE IRON WORKS

MAILING ADDRESS: P.O. BOX 3109
PORTLAND, OR 97208

5555 N. CHANNEL AVE., BLDG. 2
PORTLAND, OREGON 97217

PHONE: (503) 285-7557

TWX: 910-464-6107 NORMARINE PTL

July 20, 1989

EXXON Shipping Company
800 Bell Street
Houston, Texas 77002-7426

Attention: Mr. H. P. Leyendecker

Subject: EXXON BATON ROUGE

Dear Herb:

In accordance with the contract terms, we have prepared and hereby submit our Progress Billing No. 4.

The estimated completion percentage and contract value are figures developed by your repair superintendent, Steve Day. The actual contract value is unknown at this time due to pending negotiations of outstanding change orders.

Very truly yours,

Greg Lind
Assistant Project Manager

cc: B. Johnston
Steve Day (Exxon Shipping Co.)

NORTHWEST MARINE IRON WORKS

SHIP REPAIRERS
GENERAL MACHINE WORK
ENGINEERING

MAIL PAYMENT TO:
P.O. BOX 4000-58
PORTLAND, OREGON 97208

INVOICE

"EXXON BATON ROUGE" and Owners
c/o EXXON Shipping Company
800 Bell Street
Houston, Texas 77002-7426

DATE July 20, 1989
OUR JOB NO. 4705
CUSTOMER'S ORDER NO.
CONTRACT NO.
INVOICE NO. 4705-4
TERMS Net

CUSTOMER CODE NUMBER:

Duns No. 00-902-8580

EXXON BATON ROUGE
PROGRESS BILLING NO. 4

CONTRACT VALUE TO JULY 20, 1989	$3,431,914.00
COMPLETION TODATE @ 99.4%	3,411,323.00
LESS 20% RETENTION	($ 682,265.00)
	$2,729,058.00
LESS PROGRESS PAYMENT NO. 1	$ 584,987.00
LESS PROGRESS PAYMENT NO. 2	672,415.00
LESS PROGRESS PAYMENT NO. 3	930,988.00
TOTAL AMOUNT THIS INVOICE	$ 540,668.00

Please wire transfer payment to:

Northwest Marine Iron Works
Account No. 552-06-00040
c/o First Interstate Bank of Oregon N/A
ABA No. 123000123
29th and Yeon Branch
Portland, Oregon

EXXON REPAIR SUPERINTENDENT APPROVAL: Steven M. Day

PAST DUE PAYMENTS SHALL BEAR INTEREST AT THE HIGHEST LAWFUL RATE UNTIL REPAID, NOT TO EXCEED 1½% PER MONTH.

CORRESPONDENCE ADDRESS P.O. BOX 3109 PORTLAND, OREGON 97208 PHONE (503) 285-7557

NORTHWEST MARINE IRON WORKS

MAILING ADDRESS: P.O. BOX 3109
PORTLAND, OR 97208

5555 N. CHANNEL AVE., BLDG. 2
PORTLAND, OREGON 97217

PHONE: (503) 285-7557

TWX: 910-464-6107 NORMARINE PTL

July 13, 1989

EXXON Shipping Company
800 Bell Street
Houston, Texas 77002-7426

Attention: Mr. H. P. Leyendecker

Subject: EXXON BATON ROUGE

Dear Herb:

In accordance with the contract terms, we have prepared and hereby submit our Progress Billing No. 3.

The estimated completion percentage and contract value are identical to the figures developed by your repair superintendent, Steve Day.

Very truly yours,

Greg Lind
Assistant Project Manager

cc: B. Johnston
Steve Day (Exxon Shipping Co.)

NORTHWEST MARINE IRON WORKS

SHIP REPAIRERS
GENERAL MACHINE WORK
ENGINEERING

MAIL PAYMENT TO:
P.O. BOX 4000-58
PORTLAND, OREGON 97208

INVOICE

"EXXON BATON ROUGE" and Owners
c/o EXXON Shipping Company
800 Bell Street
Houston, Texas 77002-7426

CUSTOMER CODE NUMBER:

DATE July 13, 1989
OUR JOB NO. 4705
CUSTOMER'S ORDER NO.
CONTRACT NO.
INVOICE NO. 4705-3
TERMS Net

Duns No. 00-902-8580

EXXON BATON ROUGE
PROGRESS BILLING NO. 3

CONTRACT VALUVE TO JULY 11, 1989	$3,377,145.00
COMPLETION TODATE @ 81%	2,735,487.00
LESS 20% RETENTION	($ 547,097.00)
	$2,188,390.00
LESS PROGRESS PAYMENT NO. 1	$ 584,987.00
LESS PROGRESS PAYMENT NO. 2	$ 672,415.00
TOTAL AMOUNT THIS INVOICE	$ 930,988.00

Please wire transfer payment to:

Northwest Marine Iron Works
Account No. 552-06-00040
c/o First Interstate Bank of Oregon N/A
ABA No. 123000123
29th and Yeon Branch
Portland, Oregon

EXXON REPAIR SUPERINTENDENT
APPROVAL: Steven Day

PAST DUE PAYMENTS SHALL BEAR INTEREST AT THE HIGHEST LAWFUL RATE UNTIL REPAID, NOT TO EXCEED 1½% PER MONTH.

CORRESPONDENCE ADDRESS P.O. BOX 3109 PORTLAND, OREGON 97208 PHONE (503) 285-7557

NWMAR127990

NORTHWEST MARINE IRON WORKS

MAILING ADDRESS: P.O. BOX 3109
PORTLAND, OR 97208

5555 N. CHANNEL AVE., BLDG. 2
PORTLAND, OREGON 97217

PHONE: (503) 285-7557

TWX: 910-464-6107 NORMARINE PTL

July 12, 1989

EXXON Shipping Company
800 BEll Street
Houston, Texas 77002-7426

Attention: Mr. H. P. Leyendecker
Repair Coordinator

Subject: Contract Extension
S.S. "BATON ROUGE"

Gentlemen:

In reference to your letter dated July 10, 1989, we are currently gathering the information required to clearly display that our five (5) day extension request is justified. This presentation will be submitted to you as soon as it is completed.

In response to Paragraph 2 of your letter, the following list is provided which details items which will not be completed prior to 0730 hours on July 16, 1989.

Items 5, 6, and 7
Cargo and Ballast Deepwell Pumps.
Status: Test deepwell pumps.
Reason: Additional workscope added for repair and preservation of pumps.

Item 33
Hull Coating
Status: Repair hull coating damaged by welding accomplished on cargo tank repair items.
Reason: Additional cargo tank steel repair items.

Item 34-B
Deckhouse Coating
Status: Apply additional coat of paint. See also upper deck coating Item 145.
Reason: Item recently authorized for accomplishment of this work.

Item 36
Cargo Tank Coating
Status: Bulkhead access cut to #3 center tank requires closing, welding out and paint touch-up.
Reason: Additional cargo tank steel repairs delayed completion.

Item 103 Hull Damage Port Bow
Status: Blast and coat inside and out in forepeak area.
Reason: Additional cargo tank steel repairs caused rescheduling of this item.

Item 125 W. T. Doors and Hatches
Status: Chalk test and paint touch-up doors and hatches.
Reason: Additional cargo tank steel repairs caused rescheduling of this item. Delay in completion of deckhouse painting due to paint shortage and change order for additional coat of paint also contributing factors.

Item 127 Lifeboat Weight Test
Status: Accomplish weight test of lifeboats.
Reason: Additional work authorized on lifeboats against Item 126. Delay in final coating of deckhouse has also contributed.

Item 129 Anchor Chain and Locker
Status: Install anchor and anchor chains.
Reason: Additional work on upper deck and in cargo tanks caused rescheduling and resequencing of this item. Modification in workscope of Item 172 as well as additional upper deck blasting work also contributing factors.

Item 138 Wireway Covers
Status: Complete installation of wireway covers.
Reason: Additional cargo tank steel repairs caused rescheduling of this item. Resequencing of deck blasting and coating due to additional steel and deck piping work also contributing factor. Change order also received for additional covers.

Item 141 Handrails and Ladders
Status: Additional cargo tank steel repairs caused rescheduling of this item.

Item 145 Upper Deck Coating
Status: Complete coating of upper deck.
Reason: Extended duration of cargo tank work caused rescheduling and resequencing of upper deck coating application. Delay in final coating of deckhouse due to paint shortage and change order for additional cost of paint (se Item 34-B) also major factors since deckhouse painting must be complete prior to applying final coat on upper deck. Change orders for piping on upper deck and additional upper deck blasting work also contributing factors.

Item 172 — Deck Hydraulic Piping
Status: Complete operational test with anchor windlass and deck winches.
Reason: Additional work on upper deck and in cargo tanks caused rescheduling and resequencing of this item. Modification in workscope of this item as well as additional upper deck blasting work also contributing factors.

Item 185 — Main Deck Conduit
Status: Complete test of conduit.
Reason: Additional work on upper deck and in cargo tanks caused rescheduling of this work. Completion of this item also delayed due to additional upper deck blasting.

Item 231 — Deckhouse Ceiling Panels
Status: Fabricate and install sheet metal panel in overhead of deckhouse.
Reason: Change order authorizing this work received on July 11, 1989.

Please call me if you have any questions regarding this list.

Very truly yours,

Ivan Chandler

Ivan Chandler
Project Manager

cc: Steve Day (EXXON Shipping Company)
Bill Johnston
Don Nugent
Jim Coleman
Bob Kunkel

207

NORTHWEST MARINE IRON WORKS

MAILING ADDRESS: P.O. BOX 3109
PORTLAND, OR 97208

5555 N. CHANNEL AVE., BLDG. 2
PORTLAND, OREGON 97217

PHONE: (503) 285-7557

TWX: 910-464-6107 NORMARINE PTL

July 6, 1989

EXXON Shipping Company
800 Bell Street
Houston, TX 77002-7426

Attention: Mr. H.P. Leyendecker

Subject: EXXON BATON ROUGE

Dear Herb:

In accordance with the contract terms, we have prepared and hereby submit our Progress Billing No. 2.

The estimated completion percentage and contract value are identical to the figures developed by your Repair Superintendent, Steve Day.

Very Truly Yours,

Greg Lind
Assistant Project Manager

cc: B. Johnston
S. Day (Exxon Shipping Co.)

NORTHWEST MARINE IRON WORKS

SHIP REPAIRERS
GENERAL MACHINE WORK
ENGINEERING

MAIL PAYMENT TO:
P.O. BOX 4000-58
PORTLAND, OREGON 97208

INVOICE

"EXXON BATON ROUGE" and Owners
c/o Exxon Shipping Company
800 Bell Street
Houston, TX 77002-7426

DATE July 6, 1989
OUR JOB NO. 4705
CUSTOMER'S ORDER NO.
CONTRACT NO.
INVOICE NO. 4705-2
TERMS Net

CUSTOMER CODE NUMBER:

Duns No. 00-902-8580

EXXON BATON ROUGE

PROGRESS BILLING NO. 2

CONTRACT VALUE TO JULY 4, 1989	$3,022,600.00	
COMPLETION TO DATE @ 52%		$1,571,752.00
LESS 20% RETENTION		[$ 314,350.00]
		$1,257,402.00
LESS PROGRESS PAYMENT NO. 1		$ 584,987.00
TOTAL AMOUNT DUE THIS INVOICE		$ 672,415.00

Please Wire Transfer Payment To:

Northwest Marine Iron Works
Account No. 552-06-00040
c/o First Interstate Bank of Oregon N/A
ABA No. 123000123
29th and Yeon Branch
Portland, Oregon

PAST DUE PAYMENTS SHALL BEAR INTEREST AT THE HIGHEST LAWFUL RATE UNTIL REPAID, NOT TO EXCEED 1½% PER MONTH.

CORRESPONDENCE ADDRESS P.O. BOX 3109 PORTLAND, OREGON 97208 PHONE (503) 285-7557

199

NORTHWEST MARINE IRON WORKS

MAILING ADDRESS: P.O. BOX 3109
PORTLAND, OR 97208

5555 N. CHANNEL AVE., BLDG. 2
PORTLAND, OREGON 97217

PHONE: (503) 285-7557

TWX: 910-464-6107 NORMARINE PTL

June 29, 1989

EXXON Shipping Company
800 Bell Street
Houston, Texas 77002-7426

Attention: Mr. H. P. Leyendecker

Subject: EXXON BATON ROUGE

Dear Herb:

In accordance with the contract terms, we have prepared and hereby submit our Progress Billing No. 1.

The estimated completion percentage and contract value are identical to the figures developed by your repair superintendent, Steven Day.

We hope this initial billing meets with your timely approval, allowing funds to be transferred within the next seven (7) days.

Very truly yours,

Greg Vind
Assistant Project Manager

cc: B. Zavin
B. Johnston
Steve Day (Exxon Shipping Co.)

NORTHWEST MARINE IRON WORKS

SHIP REPAIRERS
GENERAL MACHINE WORK
ENGINEERING

MAIL PAYMENT TO:
P.O. BOX 4000-58
PORTLAND, OREGON 97208

INVOICE

"EXXON BATON ROUGE" and Owners
c/o EXXON Shipping Company
800 Bell Street
Houston, Texas 77002-7426

DATE June 29, 1989
OUR JOB NO. 4705
CUSTOMER'S ORDER NO.
CONTRACT NO.
INVOICE NO. 4705-1
TERMS Net

CUSTOMER CODE NUMBER:

Duns No. 00-902-8580

EXXON BATON ROUGE
PROGRESS BILLING NO. 1

CONTRACT VALUVE TO JUNE 27, 1989	$2,780,356.00
COMPLETION TODATE @ 26.3%	731,234.00
LESS 20% RETENTION	($ 146,247.00)
TOTAL AMOUNT THIS INVOICE	$ 584,987.00

Please wire transfer payment to:

Northwest Marine Iron Works
Account No. 552-06-00040
c/o First Interstate Bank of Oregon N/A
ABA No. 123000123
29th and Yeon Branch
Portland, Oregon

PAST DUE PAYMENTS SHALL BEAR INTEREST AT THE HIGHEST LAWFUL RATE UNTIL REPAID, NOT TO EXCEED 1½% PER MONTH.

CORRESPONDENCE ADDRESS P.O. BOX 3109 PORTLAND, OREGON 97208 PHONE (503) 285-7557

NORTHWEST MARINE IRON WORKS

MAILING ADDRESS: P.O. BOX 3109
PORTLAND, OR 97208

5555 N. CHANNEL AVE., BLDG. 2
PORTLAND, OREGON 97217

PHONE: (503) 285-7557

TWX: 910-464-6107 NORMARINE PTL

June 28, 1989

Exxon Shipping Company
800 Bell, Room 3409
Houston, TX 77002

Attention: Steve Day
Repair Supt.

Subject: Contract Extension
S/S "EXXON BATON ROUGE"

Gentlemen:

The original schedule for production work on the S/S "EXXON BATON ROUGE" provides six (6) calendar days on drydock assuming that Item 29 for rudder removal is not accomplished. This six (6) days was derived from the amount of steel repairs required in the cargo tanks per the original contract. Change Orders 101-A through 101-D have since been issued which increase the amount of steel repairs in cargo tanks #1, #2, #3 and #5 port/center/stbd. A significant amount of this work is drydock critical. In addition, these items also directly effect the scheduling and completion of other drydock critical items.

A thorough review of these Change Orders has been accomplished with our scheduling and estimating departments and the effected production crafts. The work in each item was categorized as either drydock critical or non-drydock critical.

The result of this effort was the development of a revised schedule which integrates these new items into the overall production work schedule. This schedule will be provided on 29 June 1989.

The net effect of these Change Orders is a three (3) day extension of the drydocking period as well as a three (3) day extension to the contract availability. The total price of accomplishing Items 101-A through 101-D (including the additional drydocking) as well as the overall cost of the contract extension will be submitted as soon as it is finalized.

Sincerely,

Greg Lind
Asst. Project Manager

cc: Herb Leyendecker (Exxon Shipping Co.)
Bill Zavin
Bill Johnston
Don Nugent
Jim Coleman
Bob Kunkel

Job Order
NORTHWEST MARINE IRON WORKS

JOB NO. #4705

Estimated Completion Date 7/15/89

Customer's No.

☒ Fixed Price ☐ Time Material

☐ Parts ☐ Acknowledge

Quoted Price

Supt. or Foreman in Charge

BILL TO Exxon Shipping Company
P.O. Box 1512
Houston, Texas 77251-1512

Terms: Contact: Herb Leyendecker F.O.B.

Ship To:

Line	Part No.	Qty.	Description of Work	Symbol	M.I./RFP
			S/S "Exxon Baton Roughe" Drydock and repair. Start: 6/1/89 Complete: 7/15/89 Location: DD #4 B-313 Project Manager: Ivan Chandler Ship Supt: Bob Kunkel		

	Est. Hrs.	Actual Hrs. Strt.	O.T.
30. Mach.			
31. Truck			
32. Carp.			
33. Labor.			
34. Paint.			
35. BM.			
38. Assy.			
40 Engr			
Patt.			
TOTAL			

Date of Order Comp. Date By

☐ ☐ PATT. ☐ OTHER

COST DATA

LABOR S.T. HRS.

LABOR O.T. HRS.

P.O.'s .....

STORES .....

MILEAGE .....

EXPENSE .....

OVERHEAD .....

TOTAL .....

BILLING DATA

HRS. ●

O.T. HRS. ●

MATERIALS

%

EXPENSE

TOTAL

NWMAR128000

NORTHWEST MARINE IRON WORKS

SHIP REPAIRERS
GENERAL MACHINE WORK
ENGINEERING

MAIL PAYMENT TO:
P.O. BOX 4000-58
PORTLAND, OREGON 97208

INVOICE

S/S "THOMPSON PASS" and Owners
c/o Interocean Management Corp
Three Parkway
Philadelphia, PA 19102
Attention: Mr. Frank Stone

DATE	Sept. 28, 1989
OUR JOB NO.	4708
CUSTOMER'S ORDER NO.	
CONTRACT NO.	
INVOICE NO.	4708-2
TERMS	Net

CUSTOMER CODE NUMBER:

Duns No. 00-902-8580

S/S THOMPSON PASS
FINAL INVOICE

Invoice for full and complete payment as agreed with Mr. Frank S. Stone and as detailed in the attached itemized breakdown.

Total Agreed Price	$2,471,677.00
Less Progress Payment Dated Aug. 29, 1989	(625,000.00)
Total Amount Due This Invoice	$1,846,677.00

Please wire transfer to:

Northwest Marine Iron Works
c/o First Interstate Bank of Oregon
N.W. 29th and Yeon Branch
Portland, Oregon
Account No. 552-001522-9

PAST DUE PAYMENTS SHALL BEAR INTEREST AT THE HIGHEST LAWFUL RATE UNTIL REPAID, NOT TO EXCEED 1½% PER MONTH.

CORRESPONDENCE ADDRESS P.O. BOX 3109 PORTLAND, OREGON 97208 PHONE (503) 285-7557

SS THOMPSON PASS
JOB NO. 4708

September 26, 1989

ITEM NO.	TITLE		$
0001	GENERAL INSTRUCTIONS		N/C
0002	CERTIFIED CHEMISTS GAS FREE CERTIFICATE		12,050.00
0003	GENERAL SERVICES	Original	90,082.00
		Port of Portland	121,299.00
		Tugs/Pilots	(21,140.00)
		Total	190,241.00
0003-A	GENERAL SERVICES		3,796.00
0003-B	GENERAL SERVICES		10,249.00
0004	VESSEL BALLASTING		(3,646.00)
0005	TANK CLEANING AND SLOPS		19,913.00
0005-A	TANK CLEANING AND SLOPS		10,113.00
0006	DRY DOCKING VESSEL (ABS/USCG)		114,333.00
0006-A	DRY DOCKING VESSEL (ABS/USCG) (REWRITE)		28,000.00

SS THOMPSON PASS
JOB NO. 4708

September 26, 1989

ITEM NO.	TITLE	
0007	SEA VALVE INSPECTION AND REPAIR (ABS/USCG)	$ 23,600.00
0007-A	SEA VALVE INSPECTION AND REPAIR (ABS/USCG)	2,300.00
0007-B	SEA VALVE INSPECTION AND REPAIR (ABS/USCG)	5,100.00
0007-C	SEA VALVE INSPECTION AND REPAIR (ABS/USCG)	820.00
0007-D	SEA VALVE INSPECTION AND REPAIR	1,795.00
0008	SEA CHESTS AND STRAINER PLATES (ABS/USCG)	6,533.00
0008-A	SEA CHESTS AND STRAINER PLATES (REWRITE)	2,750.00
0009	CATHODIC PROTECTION SYSTEM REPAIRS	1,300.00
0010	STERN TUBE TAILSHAFT SEAL EXAMINATION AND RENEWAL (ABS/USCG)	21,013.00
0010-A	PROPELLER SEALS AND TAILSHAFT	8,310.00
0011	POLISH VESSEL'S PROPELLER (ABS/USCG)	(5,211.00)
0011	POLISH VESSEL'S PROPELLER (ABS/USCG)	2,751.00

SS THOMPSON PASS
JOB NO. 4708

September 26, 1989

ITEM NO.	TITLE	
0012	PINTLE PIN REPAIR/BUSHING RENEWAL/RUDDER NUT (ABS/USCG)	$ 22,319.00
0012-A	PINTLE FIT REPAIR/BUSHING RENEWAL (REWRITE)	7,610.00
0013	RUDDER STOCK BEARING/CARRIER BEARING (ABS/USCG)	5,570.00
0013-A	RUDDER STOCK BEARING/CARRIER BEARING (ABS/USC)	6,430.00
0014	RUDDER ZINCS	444.00
0015	ANCHOR CHAINS (ABS)	3,816.00
0015-A	ANCHOR CHAINS	930.00
0016	CHAIN LOCKER (ABS/USCG)	5,528.00
0016-A	CHAIN LOCKER	3,800.00
0017	HULL PAINTING	82,160.00
0017-A	HULL PAINTING	69,440.00
0017-B	BLAST AND COAT PROPELLER DUCT (REWRITE)	3,700.00

SS THOMPSON PASS
JOB NO. 4708

September 26, 1989

ITEM NO.	TITLE		
0017-C	FASHION PLATE PAINTING	$	2,936.00
0018	SPEED LOG ACCESS TRUNK		1,506.00
0019	PORT AND STBD FORCED DRAFT FANS (ABS)		5,920.00
0019-A	PORT AND STBD FORCED DRAFT FANS (ABS)		2,080.00
0019-B	PORT AND STBD FORCED DRAFT FANS		500.00
0020	WATERSIDE ACCESS AND HYDROTEST PORT AND STBD BOILER (ABS/USCG)		9,566.00
0021	SAFETY VALVE TEST AND SETTING P/S (ABS/USCG)		6,384.00
0022	BOILER AIR REGISTERS PORT AND STBD		3,911.00
0023	BOILER INSPECTION & CLEANING-FIRESIDE (ABS/USCG)		15,274.00
0023-A	BOILER INSPECTION AND CLEANING		7,680.00
0023-B	BOILER INSPECTION AND CLEANING		2,200.00

SS THOMPSON PASS
JOB NO. 4708

September 26, 1989

ITEM NO.	TITLE		
0024	BOILER REFRACTORY-PATCHING REPAIRS	$	18,653.00
0024-A	BOILER REFRACTORY REPAIRS (REWRITE)		41,500.00
0025	RETRACTABLE SOOTBLOWERS UPPER LANCE TUBES RENEW, PORT AND STBD BOILERS		1,797.00
0026	BOILER VALVES PORT AND STBD BOILERS		11,785.00
0026-A	BOILER VALVES - PORT AND STBD BOILERS (ABS/USCG)		1,811.00
0026-B	BOILER VALVES PORT AND STBD BOILERS (ABS/USCG)		1,900.00
0026-C	BOILER VALVES - PORT AND STBD BOILERS		7,889.00
0026-D	BOILER VALVES - PORT AND STBD BOILERS		900.00
0027	STBD BOILER FRONT WATERWALL TUBE REPAIR		1,585.00
0028	FUEL OIL HEATERS		4,058.00
0029	DC HEATER (ABS/USCG)		1,755.00

SS THOMPSON PASS
JOB NO. 4708

September 26, 1989

ITEM NO.	TITLE		
0030	RELIEF VALVES DEAERATING FEED TANK (USCG)	$	1,639.00
0031	ENGINE ROOM AIR SUPPLY DUCT		15,745.00
0031-A	ENGINE ROOM AIR SUPPLY DUCT		3,485.00
0031-B	ENGINE ROOM AIR SUPPLY DUCT (ADDITIONAL) (REWRITE)		38,230.00
0032	QUARTER HEATING COIL RENEWAL		2,696.00
0033	FIRST STAGE FEED HEATER (ABS)		2,326.00
0034	ENGINE ROOM PUMP REPAIR		13,688.00
0034-A	ENGINE ROOM PUMP REPAIR		1,500.00
0034-B	FIRE PUMP AND FRESH WATER DRAIN TANK PUMP COUPLING ALIGNMENT		5,200.00
0035	MAIN CONDENSER		10,866.00
0036	ATMOSPHERE CONDENSER		2,167.00

SS THOMPSON PASS
JOB NO. 4708

September 26, 1989

ITEM NO.	TITLE	
0037	MAIN FEED PUMP REPAIR ASSISTANCE (ABS)	$ (1,057.00)
0038	LOW PRESSURE STEAM GENERATOR (ABS)	2,431.00
0038-A	LOW PRESSURE STEAM GENERATOR	835.00
0039	PORT AND STBD MAIN CIRCULATING PUMP REPAIR	13,963.00
0039-A	PORT AND STBD MAIN CIRCULATING PUMP REPAIR	1,150.00
0039-B	PORT AND STBD MAIN CIRCULATOR REPAIRS	10,700.00
0040	MAIN FEED PUMP, REMOTE OPERATED STEAM VALVE PORT AND STBD	1,648.00
0040-A	MAIN FEED PUMP, REMOTE OPERATED STEAM VALVES - PORT/STBD	1,000.00
0041	ENGINE ROOM PIPE RENEWAL	5,091.00
0041-A	TURBINE GENERATOR CASING REPAIR	8,600.00
0041-B	LOWER ENGINE ROOM 5" S.W. PIPE REPAIR	5,017.00

SS THOMPSON PASS
JOB NO. 4708

September 26, 1989

ITEM NO.	TITLE	
0041-C	ENGINE ROOM PIPE RENEWAL	975.00
0041-D	SSTG EXPANSION JOINT INSTALLATION	2,019.00
0042	STBD FUEL OIL TANK, HEATING COIL REPAIR	1,215.00
0042-A	STBD FUEL OIL TANK HEATING COIL REPAIR	500.00
0043	ENGINE ROOM VALVE RENEWAL OR INSTALLATION	1,231.00
0044	ENGINE ROOM MOTORS (ABS)	21,489.00
0044-A	ENGINE ROOM MOTORS (ABS)	(2,008.00)
0044-B	ENGINE ROOM MOTORS	2,800.00
0045	FANS REPAIR	13,530.00
0045-A	GALLEY VENT FAN EXPANSION JOINT	604.00
0045-B	VENT FAN REPAIRS	1,680.00

SS THOMPSON PASS
JOB NO. 4708

September 26, 1989

ITEM NO.	TITLE	
0046	SWITCHBOARD - EMERGENCY AND MAIN	2,219.00
0047	MEGGER TEST	2,600.00
0048	GENERATORS ELECTRICAL SIDE CLEANING (T/G AND D/G) (ABS)	5,803.00
0048-A	DIESEL GENERATOR ELECTRICAL REPAIRS	3,002.00
0048-B	SHIP'S SERVICE DIESEL GENERATOR CLEANING	746.00
0048-C	DIESEL GENERATOR ELECTRICAL REPAIRS	2,052.00
0049	CAPAC UNIT REPAIR ASSIST	2,220.00
0049-A	CAPAC UNIT REPAIR AND ASSIST	1,400.00
0050	HP AND LP TURBINE REPAIR (ABS/USCG)	6,006.00
0050-A	HP AND LP TURBINE REPAIR (ABS/USCG)	(898.00)

SS THOMPSON PASS
JOB NO. 4708

September 26, 1989

ITEM NO.	TITLE	
0051	IG LINE PV "BREATHER" GPE MODEL 940 (ABS/USCG)	$ 803.00
0051-A	NEW SCREEN PLATE FOR P.V. VALVE	400.00
0052	ANNUAL INSPECTION - FIRE FIGHTING EQUIPMENT (USCG) (CANCELLED)	(2,664.00)
0053	EDUCTOR NOZZLE INSPECTION/REPLACEMENT	5,390.00
0053-A	EDUCTOR NOZZLE INSPECTION/REPLACEMENT	1,450.00
0054	GP PUMP PRIMA - VAC	3,329.00
0055	SANDBLASTING/COATING BALLAST TANKS	733,534.00 (50,000.00) 683,534.00
0055-A	SHELL REPAIR - NO. 2 STBD	N/C
0056	MOORING WINCH BRAKE BAND LINING RENEWAL	10,459.00 (1,000.00) 9,459.00
0057	COW PIPE LINE STOPPER INSTALLATION (CANCELED)	(819.00)

SS THOMPSON PASS
JOB NO. 4708

September 26, 1989

ITEM NO.	TITLE		
0058	PUMP ROOM BULKHEAD REPAIR	$	645.00
			(245.00)
			400.00
0059	BALLAST PUMP SUCTION ELBOW REPAIR		2,246.00
0059-A	BALLAST PUMP SUCTION ELBOW REPAIR		1,142.00
0060	PIPE REPAIR - BALLAST TANK		2,748.00
0060-A	PIPE REPAIR - BALLAST TANK		900.00
0061	BALLAST PIPING REPAIR ON MAIN DECK		2,590.00
0062	CARGO LINE ON DECK		5,407.00
0062-A	CARGO LINE ON DECK		1,000.00
0063	REPAIR AND ROTATION OF RING MAIN PIPE LOCATED IN CARGO TANK		24,940.00
0063-A	CARGO PIPING MODIFICATIONS AND REPAIRS (REWRITE)		9,900.00

SS THOMPSON PASS
JOB NO. 4708

September 26, 1989

ITEM NO.	TITLE	
0063-B	REPAIR AND ROTATION OF RING MAIN IN CARGO TANKS	$ 4,486.00
0064	IGS LINE RENEWAL	19,449.00
0065	CARGO PUMP ROOM PIPE REPAIR	14,798.00
0065-A	CARGO PUMP PIPE REPAIR	16,641.00
0065-B	CARGO PUMP ROOM PIPE REPAIRS	350.00
0065-C	CARGO PUMP ROOM PIPE REPAIRS	3,640.00
0066	INERT GAS BLOWERS REPAIR	7,399.00 (2,959.00) 4,440.00
0067	FIXED PEDESTAL FAIRLEADS (2) (REWRITE)	502.00
0067-A	BULL NOSE CHOCK REPAIR	1,500.00
0068	NOT USED	--

SS THOMPSON PASS
JOB NO. 4708

September 26, 1989

ITEM NO.	TITLE		
0069	FUEL OIL TANK ACCESSES	$	6,501.00
0069-A	FUEL TANK ACCESS		(340.00)
0070	CHAFING BARS		4,762.00
0070-A	CHAFING BAR		250.00
0070-B	CHAFING BARS		5,100.00
0071	MOORING WIRE EYES (REWRITE)		1,933.00 (700.00) 1,233.00
0072	NO. 42 AND NO. 43 LONGITUDINALS NO. 1 STBD CARGO TANK		3,979.00
0073	BAILEY NETWORK 90		88,233.00
0073-A	NET 90 INSTALLATION		N/C
0073-B	NET 90 INSTALLATION		15,000.00
0073-C	NET 90 INSTALLATION		N/C

SS THOMPSON PASS
JOB NO. 4708

September 26, 1989

ITEM NO.	TITLE	
0073-D	NET 90 INSTALLATION	$ 4,000.00
0074	INERT GAS ISOLATION VALVE (CANCELLED)	(2,569.00)
0075	BOILER AIR HEATER RETURN LINE	571.00
0076	STBD BUNKER TANK DRAIN	327.00
0076-A	STBD BUNKER DRAIN TANK	3,800.00
0077	STBD BOILER AIR HEATER TUBE	2,431.00
0078	VAPOR CONTROL CONNECTION	10,676.00
0078-A	VAPOR CONTROL CONNECTION	300.00
0078-B	VAPOR CONTROL CONNECTION	30,200.00
0079	CARGO TANK STRUCTURAL REPAIR SURVEY	16,150.00
0079-A	CARGO TANK STRUCTURAL REPAIR SURVEY	3,000.00

SS THOMPSON PASS
JOB NO. 4708

September 26, 1989

ITEM NO.	TITLE	
0080	CLEAN AND GAS FREE NO. 4 PORT BALLAST TANK	$ 37,200.00
0081	ASSIST SHIP'S CREW WITH "ZIGGY" INSPECTION EQUIPMENT	9,395.00
0082	MISCELLANEOUS HULL STRUCTURAL REPAIRS	149,920.00
0082-A	PUMP ROOM CVK SHELL PLATE REPAIR	39,760.00
0082-B	PINTLE ACCESS DIAPHRAGM (REWRITE)	570.00
0082-C	MISCELLANEOUS HULL STRUCTURAL REPAIRS	1,045.00
0082-D	MISCELLANEOUS HULL STRUCTURAL REPAIRS	3,170.00
0082-E	MISCELLANEOUS HULL STRUCTURAL REPAIRS	1,560.00
0082-F	MISCELLANEOUS HULL STRUCTURAL REPAIRS	345.00
0082-G	RENEW STOWAGE LOCKERS	4,930.00
0082-H	MISCELLANEOUS HULL STRUCTURAL REPAIRS	1,470.00

SS THOMPSON PASS
JOB NO. 4708

September 26, 1989

ITEM NO.	TITLE	
0082-I	MISCELLANEOUS STRUCTURE REPAIR	$ 660.00
0082-J	MISCELLANEOUS STRUCTURAL REPAIRS	1,440.00
0083	INSPECTION OF BILGE KEEL	5,000.00
0083-A	BILGE KEEL FRACTURE REPAIRS	1,925.00
0084	ZINC RENEWAL	96,075.00
0085	ADDITIONAL TANK CLEANING (REWRITE)	29,000.00
0086	STACK DECK BOLTED SOFT PATCH ACCESS	5,300.00
0087	TELECOMMUNICATIONS SYSTEM	2,200.00
0088	F.W. COOLING SYSTEM ELECTRICAL MODIFICATIONS	2,700.00
0089	ASSIST MARINE TECHNICAL SERVICES	3,120.00
0090	MISCELLANEOUS STAGING (REWRITE)	5,200.00

SS THOMPSON PASS
JOB NO. 4708

September 26, 1989

ITEM NO.	TITLE	
0091	MISCELLANEOUS ENGINE ROOM LAGGING RENEWALS	$ 7,500.00
0092	PRINCE WILLIAM SOUND TOWING PACKAGE SAFETY STOP MODIFICATIONS	1,575.00
0093	BOILER LIGHT OFF SUPPORT	9,700.00
0094	PORT ACCOMMODATION LADDER	3,800.00
	GRAND TOTAL	$ 2,471,677.00

NORTHWEST MARINE IRON WORKS

SHIP REPAIRERS
GENERAL MACHINE WORK
ENGINEERING

MAIL PAYMENT TO:
P.O. BOX 4000-58
PORTLAND, OREGON 97208

INVOICE

S/S "THOMPSON PASS" and Owners
c/o Interocean Management Corp
Three Parkway
Philadelphia, PA 19102

DATE: August 29, 1989
OUR JOB NO.: 4708
CUSTOMER'S ORDER NO.:
CONTRACT NO.:
INVOICE NO.: 4708-1
TERMS: Net Upon Receipt

CUSTOMER CODE NUMBER:

Duns No. 00-902-8580

S/S "THOMPSON PASS"
PROGRESS BILLING NO. 1

Invoicing for progress to date as agreed
with Mr. Frank S. Stone

TOTAL AMOUNT DUE THIS INVOICE $625,000.00

Please wire transfer payment to:

Northwest Marine Iron Works
c/o First Interstate Bank of Oregon
N.W. 29th and Yeon Branch
Portland, Oregon
Account No. 552-001522-9

Acknowledged:

Frank Stone

I.O.M. Mr. Frank S. Stone

PAST DUE PAYMENTS SHALL BEAR INTEREST AT THE HIGHEST LAWFUL RATE UNTIL REPAID, NOT TO EXCEED 1½% PER MONTH.

CORRESPONDENCE ADDRESS P.O. BOX 3109 PORTLAND, OREGON 97208 PHONE (503) 285-7557

LANE-MILES STANDISH CO.

Job Order
NORTHWEST MARINE IRON WORKS

JOB NO. #4708

BILL TO: SOHIO

200 Public Square

Cleveland, Ohio 44114-2375

Contact: Frank Stone

Terms: F.O.B.

Ship To:

Estimated Completion Date: 9/16/89

Customer's No.

[X] Fixed Price [ ] Time Material

[ ] Parts [ ] Acknowledge

Quoted Price

Supt. or Foreman In Charge

Line	Part No.	Qty.	Description of Work	Symbol	M.I./RFP
			S/S Thompson Pass Drydock and repairs. Start: 7/31/89 Complete: 9/16/89 Location: DD #4 Project Manager: Bill Lundmark Ship Supt: Bruce Moyer		

	Est. Hrs.	Actual Hrs. Strt.	Actual Hrs. O.T.
30. Mach.			
31. Truck			
32. Carp.			
33. Labor.			
34. Paint.			
35. BM.			
38. Assy.			
40. Engr.			
Patt.			
TOTAL			

[ ] _____ [ ] _____

[ ] _____ [ ] PATT. _____

[ ] _____ [ ] OTHER _____

COST DATA

LABOR S.T. _____ HRS.

LABOR O.T. _____ HRS. _____

P.O.'s ..... _____

STORES ..... _____

MILEAGE ..... _____

EXPENSE ..... _____

OVERHEAD ..... _____

BILLING DATA

_____ HRS. @ _____ _____

O.T. _____ HRS. @ _____ _____

MATERIALS _____ _____

_____ % _____

EXPENSE _____ _____

_____ _____

TOTAL

NWMAR128020

NORTHWEST MARINE IRON WORKS

MAILING ADDRESS: P.O. BOX 3109
PORTLAND, OR 97208

5555 N. CHANNEL AVE., BLDG. 2
PORTLAND, OREGON 97217

PHONE: (503) 285-7557

TWX: 910-464-6107 NORMARINE PTL

December 12, 1989

M/V "WESTERDAM" and Owners
c/o Holland America Line
300 Elliott Avenue West
Seattle, WA 98119

Attention: Mr. J. L. Adriaanse
Vice President - Technical Dept

Gentlemen:

Please find enclosed our invoice number 4910-1 to cover costs of shipping fabric to the S/S "ROTTERDAM" at Port Everglades, Florida in accordance with instructions from the Owner's Representative.

We wish to thank you and look forward to continued business relationship.

Sincerely,

Nicholas G. Calley

NORTHWEST MARINE IRON WORKS

SHIP REPAIRERS
GENERAL MACHINE WORK
ENGINEERING

MAIL PAYMENT TO:
P.O. BOX 4000-58
PORTLAND, OREGON 97208

INVOICE

Holland America Line
300 Elliott Avenue West
Seattle, WA 98119

Attention: Mr. J. L. Adriaanse
V.P. Technical Department

CUSTOMER CODE NUMBER:

DATE December 12, 1989
OUR JOB NO. 4910
CUSTOMER'S ORDER NO.
CONTRACT NO.
INVOICE NO. 4910-1
TERMS Net

Duns No. 00-902-8580

M/V "WESTERDAM"

Furnished labor, material and equipment including freight charges to ship fabric material as designated by Owner's Representative to S/S "ROTTERDAM" at Port Everglades, Florida

Freight charges (enclosed) $2,056.80

PAST DUE PAYMENTS SHALL BEAR INTEREST AT THE HIGHEST LAWFUL RATE UNTIL REPAID, NOT TO EXCEED 1½% PER MONTH.

CORRESPONDENCE ADDRESS P.O. BOX 3109 PORTLAND, OREGON 97208 PHONE (503) 285-7557

NWMAR128022

PURCHASE ORDER

NORTHWEST MARINE IRON WORKS

5555 N. CHANNEL AVE., BLDG. 2
PORTLAND, OR 97217

REMIT TO: P.O. BOX 3109 • PORTLAND, OR 97208
PHONE: (503) 285-7557 • TWX: 910-464-6107 NORMARINE PTL • FAX: (503) 240-6600

SHIP TO ☐ 5555 N. Channel Ave., Bldg. 2, Portland, OR 97217

DEPT. #	PURCHASE ORDER NO.	CHANGE ORDER NO.
11	107057 N01	

F.O.B.	SHIP VIA	THIS NUMBER MUST APPEAR ON ALL INVOICES PACKING SLIPS & CORRESPONDENCE.

TO:
YELLOW FORWARDING COMPANY
10510 N. VANCOUVER WAY
PORTLAND, OREGON
97217
PH: 503-289-8800
CONFIRMING ORDER TO: Gary Murphy

VENDOR NO.		TERMS	PAGE	ORDER DATE
Y00356	F		1	11/30/89
Government Contract No. / PRIORITY RATING DO-A3		APPROVAL SUBCONTRACTOR CONTROL NO.		DATE REQUIRED 12/1/89
JOB #	ARTICLE #	MODIFICATION #	SHIP	DELIVERY PROMISED
4910	0001			

ITEM	CODE/REF./PC. NO.	QUANTITY	DESCRIPTION	UNIT PRICE	UNIT	EXTENSION
1		1 Lot	FREIGHT TO BE SHIPPED TO:			
			CHIEF OFFICER			
			S.S. ROTTERDAM			
			% ELLER & COMPANY			
			PORT EVERGLADES FREE TRADE ZONE #25			
			3400 McINTOCH ROAD			
			FT. LAUDERDALE, FLORIDA			
			33316			
			SHIPPING INST. PER: NICK CALLEY			
			12/1/89			
				TOTAL		$2,056.80

Date 12/1/89 Requisitioner M L Miller Department Head Administrator

This PURCHASE ORDER is subject to the terms and conditions on the reverse side which are made a part hereof, and are part of the agreement between seller and NMIW

MAT'L CERTIFICATIONS REQ. ☐
MAT'L SAFETY DATA SHEET ☐

In case of "MIC" Level one, contact the QA Dept.

BUYER
PURCHASING DEPARTMENT

60N-651 (4/89)

NWMAR128023

LANE-MILES STANDARD CO.

Job Order
NORTHWEST MARINE IRON WORKS

JOB NO. 4910

Estimated Completion Date 12/1/89

Customer's No.

☐ Fixed Price ☒ Time Material

☐ Parts ☐ Acknowledge

Quoted Price

Supt. or Foreman in Charge

BILL TO Holland America Lines
300 Elliott Avenue West
Seattle, WA 98119

Terms: F.O.B.

Ship To:

Line	Part No.	Qty.	Description of Work	Symbol	M.I./RFT
			M/S "Westerdam" Delivery of Owner furnished material to S/S "Rotterdam" for the M/S "Westerdam". Start: 11/29/89 Complete: 12/1/89 Location: Swan Project Manager: Nick Calley		

	Est. Hrs.	Actual Hrs. Strt.	O.T.
30. Mach.			
31. Truck			
32. Carp.			
33. Labor.			
34. Paint.			
35. BM.			
36. Assy.			
37. Fmn.			
Patt.			
TOTAL			

Date of Order Comp. Date By

☐ ☐ PATT. ☐ OTHER

COST DATA

LABOR S.T. HRS.

LABOR O.T. HRS.

P.O.'s

STORES

MILEAGE

EXPENSE

OVERHEAD

TOTAL

BILLING DATA

HRS. @

O.T. HRS. @

MATERIALS

%

EXPENSE

TOTAL

NWMAR128024

NORTHWEST MARINE IRON WORKS
INVOICES BY CALLEY

MONTH OF October 1987

CUSTOMER	SHIP	INVOICE NUMBER	INVOICE AMOUNT	DATE PAYMENT RECEIVED	PERCENT	AMOUNT	DATE PAID	CHECK NUMBER	
Latitudes Marine Co.	Tugboat Raven	3213	131,000.00	10/9/87	5%	6,550.00	10-21-87	216465	✓
Sunrise Shipping	Gheden Kimisis	3223	1,762.00	12/16/87	10%	176.20	~~1-8-88~~	214704	✓ 88
Chantiers De L'Atlantique	Noordam Nieuw Amsterdam	3110-I	1,500.00	11/24/87	10%	150.00	1-8-88	214704	✓ 88
Holland America	Noordam	3196-A	66,217.00	11/2/87	10%	6,622.00	10-30-87	204400	✓
Holland America	Noordam	3196-B	95,942.00	11/2/87	10%	9,594.00	10-30-87	204400	✓
Holland America	Noordam	3196-C	30,548.00	11/2/87	10%	3,055.00	10-30-87	204400	✓
Holland America	Noordam	3196-D	13,966.00	11/2/87	10%	1,396.00	10-30-87	204400	✓
Holland America	Noordam	3196-E	23,840.00	11/2/87	10%	2,384.00	10-30-87	204400	✓
General Steamship	Stardancer	3227	1,185.00	11/23/87	10%	118.50	1-8-88	214704	✓ 88
Holland America	Noordam	3196-F	448,617.00	—	10%	44,862.00	10-30-87	204400	✓
Holland America	Noordam	3196-G	(400,000.00)	—	10%	<40,000.00>	10-30-87	204400	✓

X

NWMAR128025

BC

13

NORTHWEST MARINE IRON WORKS

SHIP REPAIRERS
GENERAL MACHINE WORK
ENGINEERING

MAIL PAYMENT TO:
P.O. BOX 4000-58
PORTLAND, OREGON 97208

INVOICE

Latitudes Marine Companies
One Columbia River - 2nd Floor
Vancouver, Washington 98660

DATE October 7, 1987
OUR JOB NO. 3213
CUSTOMER'S ORDER NO.
CONTRACT NO.
INVOICE NO. 3213
TERMS Net

CUSTOMER CODE NUMBER: 10275

Duns No. 00-902-8580

"TUGBOAT RAVEN"

To accomplish repairs and betterments to the Tugboat Raven per attached specifications.

Oregon Labor

TOTAL AMOUNT DUE THIS INVOICE: $131,000.00

Final Calley Net

PAST DUE PAYMENTS SHALL BEAR INTEREST AT THE HIGHEST LAWFUL RATE UNTIL REPAID, NOT TO EXCEED 1½% PER MONTH.

CORRESPONDENCE ADDRESS P.O. BOX 3109 PORTLAND, OREGON 97208 PHONE (503) 285-7557

NWMAR128026

17 ✓

NORTHWEST MARINE IRON WORKS

SHIP REPAIRERS
GENERAL MACHINE WORK
ENGINEERING

INVOICE

MAIL PAYMENT TO:
P.O. BOX 4000-58
PORTLAND, OREGON 97208

Sunrise Shipping Agency
1515 S. W. 5th Avenue
Suite 820
Portland, Oregon 97201

DATE	October 7, 1987
OUR JOB NO.	3223
CUSTOMER'S ORDER NO.	
CONTRACT NO.	
INVOICE NO.	3223
TERMS	Net

CUSTOMER CODE NUMBER: 29150

Duns No. 00-902-8580

M/V "GOLDEN KIMISIS"

Nonoperation

To accomplish repairs and betterments to the subject vessel per attached specifications.

TOTAL AMOUNT DUE THIS INVOICE: $1,762.00

FINAL
CALLEY
NET

PAST DUE PAYMENTS SHALL BEAR INTEREST AT THE HIGHEST LAWFUL RATE UNTIL REPAID, NOT TO EXCEED 1½% PER MONTH.

NWMAR128027

BC

20 ✓

NORTHWEST MARINE IRON WORKS

SHIP REPAIRERS
GENERAL MACHINE WORK
ENGINEERING

MAIL PAYMENT TO:
P.O. BOX 4000-58
PORTLAND, OREGON 97208

INVOICE

CHANTIERS DE L'ATLANTIQUE
Alsthom-Atlantique
B. P. 400-44608
St. Nazaire, Cedex
FRANCE

DATE: October 9, 1987
OUR JOB NO.: 3110
CUSTOMER'S ORDER NO.:
CONTRACT NO.:
INVOICE NO.: 3110-I
TERMS: NET

CUSTOMER CODE NUMBER: 02119

Duns No. 00-902-8580

WAREHOUSE CHARGES FOR THE MAIN ENGINE GENERATOR STEP-UP GEARS, EX-NOORDAM AND NIEUW AMSTERDAM.

CHARGES FOR THE MONTH OF SEPTEMBER, 1987.

TOTAL AMOUNT DUE THIS INVOICE: $1,500.00 (USD)

FINAL CALLEY NET

PAST DUE PAYMENTS SHALL BEAR INTEREST AT THE HIGHEST LAWFUL RATE UNTIL REPAID, NOT TO EXCEED 1½% PER MONTH.

CORRESPONDENCE ADDRESS P.O. BOX 3109 PORTLAND, OREGON 97208 PHONE (503) 285-7557

NWMAR128028

52 ✓

NORTHWEST MARINE IRON WORKS

SHIP REPAIRERS
GENERAL MACHINE WORK
ENGINEERING

MAIL PAYMENT TO:
P.O. BOX 4000-58
PORTLAND, OREGON 97208

INVOICE

M/V "NOORDAM" and Owners
c/o Holland America Lines
300 Elliott Avenue West
Seattle, Washington 98119

DATE October 22, 1987
OUR JOB NO. 3196
CUSTOMER'S ORDER NO.
CONTRACT NO.
INVOICE NO. 3196-A
TERMS NET

CUSTOMER CODE NUMBER: 07203

Duns No. 00-902-8580

S/S "NOORDAM"

For furnishing drydock during vessel's repair availability.

TOTAL AMOUNT DUE THIS INVOICE: $66,217.00

PARTIAL
CALLEY
NET

PAST DUE PAYMENTS SHALL BEAR INTEREST AT THE HIGHEST LAWFUL RATE UNTIL REPAID, NOT TO EXCEED 1½% PER MONTH.

CORRESPONDENCE ADDRESS: P.O. BOX 2100, PORTLAND, OREGON 97208 PHONE (503) 285-7557

NWMAR128029

NORTHWEST MARINE IRON WORKS

53

SHIP REPAIRERS
GENERAL MACHINE WORK
ENGINEERING

MAIL PAYMENT TO:
P.O. BOX 4000-58
PORTLAND, OREGON 97208

INVOICE

M/V "NOORDAM" and Owners
c/o Holland America Lines
300 Elliott Avenue West
Seattle, Washington 98119

DATE October 22, 1987
OUR JOB NO. 3196
CUSTOMER'S ORDER NO.
CONTRACT NO.
INVOICE NO. 3196-B
TERMS NET

CUSTOMER CODE NUMBER: 07203

Duns No. 00-902-8580

S/S "NOORDAM"

For furnishing temporary services to M/V "NOORDAM" during vessel's drydock.

TOTAL AMOUNT DUE THIS INVOICE: $95,942.00

PARTIAL
CALLEY
NET

PAST DUE PAYMENTS SHALL BEAR INTEREST AT THE HIGHEST LAWFUL RATE UNTIL REPAID, NOT TO EXCEED 1½% PER MONTH.

NWMAR128030

NORTHWEST MARINE IRON WORKS

SHIP REPAIRERS
GENERAL MACHINE WORK
ENGINEERING

MAIL PAYMENT TO:
P.O. BOX 4000-58
PORTLAND, OREGON 97208

INVOICE

M/V "NOORDAM" and Owners
c/o Holland America Lines
300 Elliott Avenue West
Seattle, Washington 98119

DATE October 22, 1987
OUR JOB NO. 3196
CUSTOMER'S ORDER NO.
CONTRACT NO.
INVOICE NO. 3196-C
TERMS NET

CUSTOMER CODE NUMBER: 07203

Duns No. 00-902-8580

S/S "NOORDAM"

For furnishing labor, material, and equipment to accomplish repair to the starboard propeller in accordance with the attached specification.

TOTAL AMOUNT DUE THIS INVOICE: $30,548.00

PARTIAL
CALLEY
NET

PAST DUE PAYMENTS SHALL BEAR INTEREST AT THE HIGHEST LAWFUL RATE UNTIL REPAID, NOT TO EXCEED 1½% PER MONTH.

CORRESPONDENCE ADDRESS, P.O. BOX 3100, PORTLAND, OREGON 97208, PHONE (503) 285-7557

NWMAR128031

NORTHWEST MARINE IRON WORKS

55 ✓

SHIP REPAIRERS
GENERAL MACHINE WORK
ENGINEERING

MAIL PAYMENT TO:
P.O. BOX 4000-58
PORTLAND, OREGON 97208

INVOICE

M/V "NOORDAM" and Owners
c/o Holland America Lines
300 Elliott Avenue West
Seattle, Washington 98119

DATE October 22, 1987
OUR JOB NO. 3196
CUSTOMER'S ORDER NO.
CONTRACT NO.
INVOICE NO. 3196-D
TERMS NET

CUSTOMER CODE NUMBER: 07203

Duns No. 00-902-8580

S/S "NOORDAM"

For furnishing labor, material, and equipment to accomplish repairs to the starboard tailshaft in accordance with the attached specification.

TOTAL AMOUNT DUE THIS INVOICE: $13,966.00

PARTIAL
CALLEY
NET

PAST DUE PAYMENTS SHALL BEAR INTEREST AT THE HIGHEST LAWFUL RATE UNTIL REPAID, NOT TO EXCEED 1½% PER MONTH.

NWMAR128032

60 v

NORTHWEST MARINE IRON WORKS

SHIP REPAIRERS
GENERAL MACHINE WORK
ENGINEERING

MAIL PAYMENT TO:
P.O. BOX 4000-58
PORTLAND, OREGON 97208

INVOICE

M/V "NOORDAM" and Owners
c/o Holland America Lines
300 Elliott Avenue West
Seattle, Washington 98119

DATE: October 23, 1987
OUR JOB NO.: 3196
CUSTOMER'S ORDER NO.:
CONTRACT NO.:
INVOICE NO.: 3196-E
TERMS: Net

CUSTOMER CODE NUMBER: 07203

Duns No. 00-902-8580

M/V "NOORDAM"

For furnishing labor, material and equipment to repair the four (4) blades on the starboard propeller.

TOTAL AMOUNT DUE THIS INVOCE: $23,840.00

Partial
Calley
Net

PAST DUE PAYMENTS SHALL BEAR INTEREST AT THE HIGHEST LAWFUL RATE UNTIL REPAID, NOT TO EXCEED 1½% PER MONTH.

CORRESPONDENCE ADDRESS, P.O. BOX 3109, PORTLAND, OREGON 97208, PHONE (503) 285-7557

NWMAR128033

6 ✓

NORTHWEST MARINE IRON WORKS

SHIP REPAIRERS
GENERAL MACHINE WORK
ENGINEERING

MAIL PAYMENT TO:
P.O. BOX 4000-58
PORTLAND, OREGON 97208

INVOICE

M/V "STARDANCER" AND OWNERS
c/o General Steamship Corporation
421 S.W. 6th Avenue - Suite 410
Portland, Oregon 97204

Attention: Mr. Gene Dieterle

CUSTOMER CODE NUMBER: 06200

DATE	October 23, 1987
OUR JOB NO.	3227
CUSTOMER'S ORDER NO.	
CONTRACT NO.	
INVOICE NO.	3227
TERMS	

Duns No. 00-902-8580

M/V "STARDANCER"

For furnishing labor and towboat services to deliver two (2) breast out floats from Berth 314 - Swan Island to Terminal 2 - Berth 204 on October 4, 1987 and return to Swan Island on October 5,1987.

TOTAL AMOUNT DUE THIS INVOCE: $1,185.00

Final Calley Net

PAST DUE PAYMENTS SHALL BEAR INTEREST AT THE HIGHEST LAWFUL RATE UNTIL REPAID, NOT TO EXCEED 1½% PER MONTH.

CORRESPONDENCE ADDRESS: P.O. BOX 3100, PORTLAND, OREGON 97208, PHONE (503) 285-7557

BC

69

NORTHWEST MARINE IRON WORKS

SHIP REPAIRERS
GENERAL MACHINE WORK
ENGINEERING

MAIL PAYMENT TO:
P.O. BOX 4000-58
PORTLAND, OREGON 97208

INVOICE

M/V "NOORDAM"
c/o Holland America Lines
300 Elliott Avenue West
Seattle, Washington 98110

DATE October 28, 1987
OUR JOB NO. 3196
CUSTOMER'S ORDER NO.
CONTRACT NO.
INVOICE NO. 3196-F
TERMS Net

CUSTOMER CODE NUMBER: 07203

Duns No. 00-902-8580

S/S "NOORDAM"

For furnishing labor, material and equipment to accomplish repairs as set forth under attached Specification Items 1 thru 76 inclusive.

TOTAL AMOUNT DUE THIS INVOICE $448,617.00

Partial
Calley
Net

PAST DUE PAYMENTS SHALL BEAR INTEREST AT THE HIGHEST LAWFUL RATE UNTIL REPAID, NOT TO EXCEED 1½% PER MONTH.

CORRESPONDENCE ADDRESS P.O. BOX 3109 PORTLAND, OREGON 97208 PHONE (503) 285-7557

NWMAR128035

NORTHWEST MARINE IRON WORKS

MAILING ADDRESS: P.O. BOX 3109
PORTLAND, OR 97208

5555 N. CHANNEL AVE., BLDG. 2
PORTLAND, OREGON 97217

PHONE: (503) 285-7557

TWX: 910-464-6107 NORMARINE PTL

October 29, 1987

Holland America Line
Elliott Bay Office Park
300 Elliott Avenue West
Seattle, WA 98119

Attention: Mr. S. L. Adriaanse
Vice President - Technical Department

RE: M/V "NOORDAM"

Dear Mr. Adriaanse:

Enclosed herewith please find copies of Invoice Number 3196-F covering costs of repairs to owner's account.

We are also pleased to enclose additional copies of invoices for the account of your underwriter.

We wish to thank you for your valued business and look forward to a continued business relationship.

Very truly yours,

Nick G. Calley
Director of Sales

NGCdc

enclosures

NORTHWEST MARINE IRON WORKS

SHIP REPAIRERS
GENERAL MACHINE WORK
ENGINEERING

MAIL PAYMENT TO:
P.O. BOX 4000-58
PORTLAND, OREGON 97208

INVOICE

M/V "NOORDAM" and Owners
c/o Holland America Lines
300 Elliott Avenue West
Seattle, Washington 98119

DATE October 30,1987
OUR JOB NO. 3196
CUSTOMER'S ORDER NO.
CONTRACT NO.
INVOICE NO. 3196-G
TERMS CREDIT

CUSTOMER CODE NUMBER: 07203

Duns No. 00-902-8580

M/V "NOORDAM"

CREDIT MEMO - IN HOUSE ONLY

PLEASE CANCEL INVOICE 3196 IN ITS ENTIRETY.	(400,000.00)
TOTAL AMOUNT DUE THIS INVOCE:	(400,000.00)

Final
Calley
Credit

PAST DUE PAYMENTS SHALL BEAR INTEREST AT THE HIGHEST LAWFUL RATE UNTIL REPAID, NOT TO EXCEED 1½% PER MONTH.

CORRESPONDENCE ADDRESS: P.O. BOX 3100, PORTLAND, OREGON 97208, PHONE (503) 285-7557

NWMAR128037

NORTHWEST MARINE IRON WORKS
INVOICES BY CALLEY

MONTH OF September 1987

CUSTOMER	SHIP	INVOICE NUMBER	INVOICE AMOUNT	DATE PAYMENT RECEIVED	PERCENT	AMOUNT	DATE PAID	CHECK NUMBER	
Chantiers De L'Atlantique	Noordam & Nieuw Amsterdam	3110-H	1,500.00	10/15/87	10%	150.00	11-20-87	214403	✓
EAC Steamship	Acrotus	3217	693.00	9/30/87					
Holland America	Noordam	3196	400,000.00	9/29/87	10%	40,000.00	10-30-87	204400	✓
Maritime Overseas ~~Inter~~ Corp	Overseas Boston	3204	3,530.00	11/16/87	10%	353.00	11-20-87	214403	✓

NWMAR128038

NORTHWEST MARINE IRON WORKS

SHIP REPAIRERS
GENERAL MACHINE WORK
ENGINEERING

MAIL PAYMENT TO:
P.O. BOX 4000-58
PORTLAND, OREGON 97208

INVOICE

CHANTIERS DE L'ATLANTIQUE
Alsthom-Atlantique
B. P. 400-44608
St. Nazaire, Cedex
FRANCE

DATE September 2, 1987
OUR JOB NO. 3110
CUSTOMER'S ORDER NO.
CONTRACT NO.
INVOICE NO. 3110-H
TERMS NET

CUSTOMER CODE NUMBER: 02119

Duns No. 00-902-8580

WAREHOUSE CHARGES FOR THE MAIN ENGINE GENERATOR STEP-UP GEARS, EX-NOORDAM AND NIEUW AMSTERDAM.

CHARGES FOR THE MONTH OF AUGUST, 1987.

TOTAL AMOUNT DUE THIS INVOICE: $1,500.00 (USD)

PARTIAL CALLEY NET

PAST DUE PAYMENTS SHALL BEAR INTEREST AT THE HIGHEST LAWFUL RATE UNTIL REPAID, NOT TO EXCEED 1½% PER MONTH.

CORRESPONDENCE ADDRESS P.O. BOX 3109 PORTLAND, OREGON 97208 PHONE (503) 285-7557

NWMAR128039

BC

NORTHWEST MARINE IRON WORKS

SHIP REPAIRERS
GENERAL MACHINE WORK
ENGINEERING

MAIL PAYMENT TO:
P.O. BOX 4000-58
PORTLAND, OREGON 97208

INVOICE

M/V "ACRITUS" and Owners
c/o EAC Steamship
1300 S. W. 5th Avenue
Suite 2328
Portland, OR 97201

DATE September 8, 1987
OUR JOB NO. 3217
CUSTOMER'S ORDER NO.
CONTRACT NO.
INVOICE NO. 3217
TERMS NET

CUSTOMER CODE NUMBER: 04280

Duns No. 00-902-8580

M/V "ACRITUS"

TO ACCOMPLISH REPAIRS AND BETTERMENTS TO THE SUBJECT VESSEL, AS PER ATTACHED SPECIFICATION.

Oregon Dalles

TOTAL AMOUNT DUE THIS INVOICE: $693.00

FINAL
CALLEY
NET

PAST DUE PAYMENTS SHALL BEAR INTEREST AT THE HIGHEST LAWFUL RATE UNTIL REPAID, NOT TO EXCEED 1½% PER MONTH.

CORRESPONDENCE ADDRESS P.O. BOX 3109 PORTLAND, OREGON 97208 PHONE (503) 285-7557

NWMAR128040

BR

30 ✓

NORTHWEST MARINE IRON WORKS

SHIP REPAIRERS
GENERAL MACHINE WORK
ENGINEERING

MAIL PAYMENT TO:
P.O. BOX 4000-58
PORTLAND, OREGON 97208

INVOICE

M/V "NOORDAM"
c/o Holland America Lines
300 Elliott Avenue West
Seattle, Washington 98119

Attn: Mr. Hogandoorn

DATE September 28, 1987
OUR JOB NO. 3196
CUSTOMER'S ORDER NO.
CONTRACT NO.
INVOICE NO. 3196
TERMS Net

CUSTOMER CODE NUMBER: 07203

Duns No. 00-902-8580

S/S "NOORDAM"

PROGRESS BILLING NO. 1

Progress Billing No. 1 as per agreement to cover cost of work to date on the S/S NOORDAM.

Crown Stable

TOTAL AMOUNT DUE THIS INVOICE: $400,000.00

Partial
Calley
Net

PAST DUE PAYMENTS SHALL BEAR INTEREST AT THE HIGHEST LAWFUL RATE UNTIL REPAID, NOT TO EXCEED 1½% PER MONTH.

CORRESPONDENCE ADDRESS P.O. BOX 3109 PORTLAND, OREGON 97208 PHONE (503) 285-7557

NWMAR128041

BC

391

NORTHWEST MARINE IRON WORKS

SHIP REPAIRERS
GENERAL MACHINE WORK
ENGINEERING

MAIL PAYMENT TO:
P.O. BOX 4000-58
PORTLAND, OREGON 97208

INVOICE

M/V "OVERSEAS BOSTON"
c/o Maritime Overseas Corporation
43 West 42nd Street
New York, New YOrk 10036

Attn: Mr. Walter Glass

CUSTOMER CODE NUMBER: 11720

DATE: September 29, 1987
OUR JOB NO.: 3204
CUSTOMER'S ORDER NO.: W.O. 13460
CONTRACT NO.:
INVOICE NO.: 3204
TERMS: Net

Duns No. 00-902-3580

M/V "OVERSEAS BOSTON"

Furnish (2) Reefer Doors.	$3,300.00
Furnish (2) Door Hooks.	$ 230.00
TOTAL AMOUNT DUE THIS INVOICE:	$3,530.00

Final
Cattley
Net

PAST DUE PAYMENTS SHALL BEAR INTEREST AT THE HIGHEST LAWFUL RATE UNTIL REPAID, NOT TO EXCEED 1½% PER MONTH.

CORRESPONDENCE ADDRESS P.O. BOX 3109 PORTLAND, OREGON 97208 PHONE (503) 285-7557

NWMAR128042

NORTHWEST MARINE IRON WORKS
INVOICES BY CALLEY

MONTH OF August 1987

CUSTOMER	SHIP	INVOICE NUMBER	INVOICE AMOUNT	DATE PAYMENT RECEIVED	PERCENT	AMOUNT	DATE PAID	CHECK NUMBER	
Cascade Shipping	Ombrosian Navigator	3195	1,325.00	8/19/87					
Chantiers De L'Atlantique	Noordam New Amsterdam	3110-G	1,500.00	9/15/87	10%	150.00	10-21-87	216465	✓
Sunrise Shipping	Agamemnon	3187-A	<672.00>	Debit July 87	→				
Sunrise Shipping	Agamemnon	3187-B	789.00	12/21/87	10%	78.90	1-8-88	214704	✓ 88
Sunrise Shipping	Peonia	3201	11,808.00	11/9/87	10%	1,180.80	11-20-87	214403	✓
Maritime Overseas Corp	Overseas Juneau	3194	1,599.00	9/28/87		159.90	10-21-87	216465	✓
General Steamship	Bogasary Empat	3203	1,579.00	9/14/87	10%	157.90	10-21-87	216465	✓
Sea Containers Services Ltd	Contender Argent	3202	11,540.10	—	→				
G.C. Ridley + Co	Contender Argent	3202B	17,248.10	—					
Sea Containers Services Ltd	Contender Argent	3202A	<11,540.10>	—	→				
General Steamship	Bogasari Jima	3212	1,389.00	9/28/87	10%	138.90	10-21-87	216465	✓

X

✓

NWMAR128043

BC

14

NORTHWEST MARINE IRON WORKS

SHIP REPAIRERS
GENERAL MACHINE WORK
ENGINEERING

MAIL PAYMENT TO:
P.O. BOX 4000-58
PORTLAND, OREGON 97208

INVOICE

M/V "OINOUSSIAN NAVIGATOR"
c/o Cascade Shipping
806 S. W. Broadway, Suite 550
Portland, OR 97205

DATE August 7, 1987
OUR JOB NO. 3195
CUSTOMER'S ORDER NO.
CONTRACT NO.
INVOICE NO. 3195
TERMS NET

CUSTOMER CODE NUMBER: 01948

Duns No. 00-902-8580

M/V "OINOUSSIAN NAVIGATOR"

TO ACCOMPLISH REPAIRS AND BETTERMENTS TO THE SUBJECT VESSEL, AT PER ATTACHED SPECIFICATION #1.

TOTAL AMOUNT DUE THIS INVOICE: $1,325.00

FDC Book
Oregon Labor

FINAL
CALLEY
NET

PAST DUE PAYMENTS SHALL BEAR INTEREST AT THE HIGHEST LAWFUL RATE UNTIL REPAID, NOT TO EXCEED 1½% PER MONTH.

CORRESPONDENCE ADDRESS P.O. BOX 3109 PORTLAND, OREGON 97208 PHONE (503) 285-7557

NWMAR128044

NORTHWEST MARINE IRON WORKS

SHIP REPAIRERS
GENERAL MACHINE WORK
ENGINEERING

MAIL PAYMENT TO:
P.O. BOX 4000-58
PORTLAND, OREGON 97208

INVOICE

CHANTIERS DE L'ATLANTIQUE
Alsthom-Atlantique
B. P. 400-44608
St. Nazaire, Cedex
FRANCE

CUSTOMER CODE NUMBER: 02119

DATE: August 7, 1987
OUR JOB NO.: 3110
CUSTOMER'S ORDER NO.:
CONTRACT NO.:
INVOICE NO.: 3110-G
TERMS: NET

Duns No. 00-902-8580

WAREHOUSE CHARGES FOR THE MAIN EXGINE GENERATOR STEP-UP GEARS, EX-NOORDAM AND NIEUW AMSTERDAM.

CHARGES FOR THE MONTH OF JULY, 1987.

TOTAL AMOUNT DUE THIS INVOICE: $1,500.00 (USD)

PARTIAL
CALLEY
NET

PAST DUE PAYMENTS SHALL BEAR INTEREST AT THE HIGHEST LAWFUL RATE UNTIL REPAID, NOT TO EXCEED 1½% PER MONTH.

CORRESPONDENCE ADDRESS P.O. BOX 3109 PORTLAND, OREGON 97208 PHONE (503) 285-7557

NWMAR128045

BC

1/16

NORTHWEST MARINE IRON WORKS

SHIP REPAIRERS
GENERAL MACHINE WORK
ENGINEERING

MAIL PAYMENT TO:
P.O. BOX 4000-58
PORTLAND, OREGON 97208

INVOICE

M/V "AGAMEMNON" and Owners
c/o Sunrise Shipping
1515 S. W. 15th, Suite 820
Portland, OR 97201

DATE August 7, 1987
OUR JOB NO. 3187
CUSTOMER'S ORDER NO.
CONTRACT NO.
INVOICE NO. 3187-A
TERMS CREDIT

CUSTOMER CODE NUMBER: 29150

Duns No. 00-902-8560

M/V "AGAMEMNON"

TO CREDIT OUR INVOICE NUMBER 3187, DATED JULY 14, 1987 IN IT'S ENTIRETY.

Charge to Gen

See rebilling 3187-B dated, August 7, 1987.

CREDIT CALLEY &

TOTAL AMOUNT OF THIS CREDIT ($672.00)

PAST DUE PAYMENTS SHALL BEAR INTEREST AT THE HIGHEST LAWFUL RATE UNTIL REPAID, NOT TO EXCEED 1½% PER MONTH.

CORRESPONDENCE ADDRESS, P.O. BOX 3100, PORTLAND, OREGON 97208, PHONE (503) 285-7557

NWMAR128046

NORTHWEST MARINE IRON WORKS

SHIP REPAIRERS
GENERAL MACHINE WORK
ENGINEERING

MAIL PAYMENT TO:
P.O. BOX 4000-58
PORTLAND, OREGON 97208

INVOICE

M/V "AGAMEMNON" and Owners
c/o Sunrise Shipping
1515 S. W. 15th, Suite 820
Portland, OR 97201

DATE August 7, 1987
OUR JOB NO. 3187
CUSTOMER'S ORDER NO.
CONTRACT NO.
INVOICE NO. 3187-B
TERMS NET

CUSTOMER CODE NUMBER: 29150

Duns No. 00-902-8580

M/V "AGAMEMNON"

TO ACCOMPLISH REPAIRS AND BETTERMENTS TO THE SUBJECT VESSEL, AT PER ATTACHED SPECIFICATION #1 AGREEMENT BETWEEN MR. NICK CALLEY AND CUSTOMER.

TOTAL AMOUNT THIS INVOICE $789.00

FINAL
CALLEY
NET

PAST DUE PAYMENTS SHALL BEAR INTEREST AT THE HIGHEST LAWFUL RATE UNTIL REPAID, NOT TO EXCEED 1½% PER MONTH.

CORRESPONDENCE ADDRESS P.O. BOX 3109 PORTLAND, OREGON 97208 PHONE (503) 285-7557

NWMAR128047

NORTHWEST MARINE IRON WORKS

M/V "AGAMEMNON" and Owners
c/o Sunrise Shipping
1515 S. W. 15th, Suite 820
Portland, OR 97201

Job Order #3187
July 14, 1987

U. S. CUSTOMS REGULATIONS

In accordance with the Contractor's practice of strict adherence to the current U. S. Customs Regulations as applicable to repairs and renewals in way of international vessels, removal and return of all material and equipment as listed in the following specification items will be accomplished in accordance with U. S. Customs Regulations. All scrap material incurred during the normal course of the repair period will be returned to the vessel for disposal at the Owner's discretion.

Item #1 Crane & Cargo Gear Testing: $789.00

Furnish labor, material and equipment to transport thirty (30) long ton cargo gear testing weights to vessel at International Dock on Friday July 10, 1987. Ship will use their lifting gear to put aboard ship. After completion of weight testing furnish labor, material and equipment to pick up and return weights to ship repair facility and store in designated area.

Weight furnished for testing 5 trolley type cranes are:

one at 43,810 lbs.
one at 22,990 lbs.
one at 400 lbs.

67,200 lbs. - thirty (30) long tons

Operations of cranes to be performed by, Service Engineer & assisted by Northwest Marine Personnel, moving of weight from #1 crane to #5 crane.

#1 crane was tested at 10:55 A.M. for 5 minutes.
#2 crane was tested at 11:13 A.M. for 5 minutes.
#3 crane was tested at 11:20 A.M. for 5 minutes.
#4 crane was tested at 11:43 A.M. for 5 minutes.
#5 crane was tested at 11:55 A.M. for 5 minutes.

All work to be accomplished to satisfaction of Owner's Representative and American Bureau of Shipping Surveyor.

TOTAL AMOUNT DUE THIS INVOICE	$789.00

BC

NORTHWEST MARINE IRON WORKS

SHIP REPAIRERS
GENERAL MACHINE WORK
ENGINEERING

MAIL PAYMENT TO:
P.O. BOX 4000-58
PORTLAND, OREGON 97208

INVOICE

SUNRISE SHIPPING AGENCY
1515 S. W. 5th Avenue
Portland, OR 97201

DATE August 7, 1987
OUR JOB NO. 3201
CUSTOMER'S ORDER NO.
CONTRACT NO.
INVOICE NO. 3201
TERMS NET

CUSTOMER CODE NUMBER: 29150

Duns No. 00-902-8580

M/V "PEONIA"

TO ACCOMPLISH REPAIRS AND BETTERMENTS TO THE SUBJECT VESSEL, AS PER ATTACHED SPECIFICATION #1.

Oregon Labor

TOTAL AMOUNT DUE THIS INVOICE $11,808.00

Final
CALLEY
NET 30

PAST DUE PAYMENTS SHALL BEAR INTEREST AT THE HIGHEST LAWFUL RATE UNTIL REPAID, NOT TO EXCEED 1½% PER MONTH.

CORRESPONDENCE ADDRESS P.O. BOX 3109 PORTLAND, OREGON 97208 PHONE (503) 285-7557

NWMAR128050

NORTHWEST MARINE IRON WORKS

M/V "PEONIA" and Owners
Yamamoto Kisen Co. Ltd.
c/o Sunrise Shipping Agency, Inc.
1515 S. W. Fifth Avenue
Suite 820
Portland, OR 97201

Job No. #3201
August 7, 1987

U.S. Customs Regulation

In accordance with the contractor's practice of strict adherence to the current U.S. Customs Regulations as applicable to repairs, and renewable in way of international vessels, remove and return of all material and equipment listed in the following Specifications Items will be accomplished in accordance with U.S. Customs Regulations. All scrap material incurred during the normal course of the repair period will be returned to the vessel for disposal at the owner's discretion.

U.S. COAST GUARD & FIRE MARSHAL'S WELDING BURNING PERMITS AND SERVICES

In accordance with the Contractor's practice of strict adherence to the current U.S. Coast Guard Regulations as applicable to repairs and removals in way of international and U.S. vessels, U.S. Coast Guard hot work permits must be obtained from the Port Terminal Manager or Superintendent prior to commencing any hot work on vessel. Upon completion of all repairs, one (1) copy of same hot work permit must be returned to the Terminal Manager or Superintendent. Provide one (1) Fire Marshal's burning and welding permit as needed per Craft and each twenty-four (240 hour period. Provide services at each Terminal as required.

Item #1 Deck Crane Pedestals - Gussett Weld Repairs

Provide labor and material to vee out, dye penetrant check and reweld eight (8) weld fractures per crane base on each of the #1, #2, and #3 deck cranes as directed by the Owners Representative and the Classification Surveyor.

Item #2 Gas Free Certificate

Furnish the services of a Certified Marine Chemist to inspect and issue "Safe For Men, Safe For Fire" Gas FreeCertificates as required.

QUOTED PRICE ITEM NO. 1 & No. 2
LETTER DATED JULY 30, 1987: USD $6,218.00

M/V "PEONIA"
Job No. #3201
Augst 7, 1987

Item #3 Furnish Shackle $ 258.00

Provide labor to furnish and deliver one (1) 2 1/2" shackle to the vessel. Shackle is to be certified (#P-131-8) to a Safe Working Load (SWL) of 55 short tons.

Item #4 Gussett Repairs $4,042.00

Provide labor and material to remove a total of ten (10) gussetts from #1, #2, and #3 deck crane pedestals. Vee out cracks behind each gussett, dye penetrant to ensure each crack has been removed, and renew approximately (ninety six (96") inches of cracks to be dealt with). Fabricated and install ten (10) new gussetts to replace those removed in way of crack repairs. New gussetts shall be fabricated using 40.8# steel plate and per the sketch below.

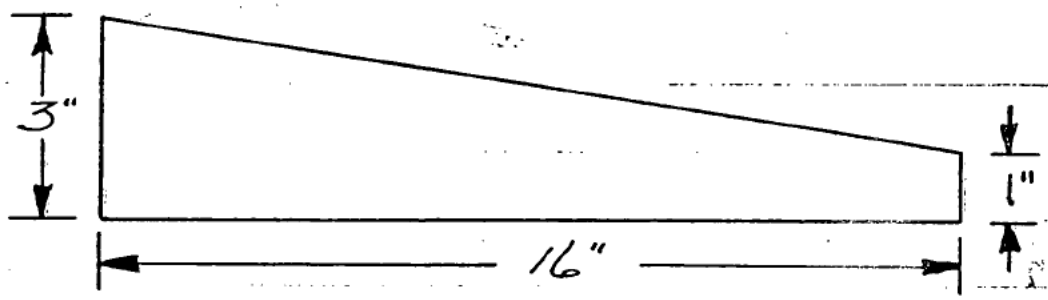

Item #5 Premium Time $1,290.00

Furnish necessary premium time charges as authorized so as not delay vessels loading commitment.

TOTAL AMOUNT DUE THIS INVOICE USD $11,808.00

BC

NORTHWEST MARINE IRON WORKS

SHIP REPAIRERS
GENERAL MACHINE WORK
ENGINEERING

INVOICE

MAIL PAYMENT TO:
P.O. BOX 4000-58
PORTLAND, OREGON 97208

S/T "OVERSEAS JUNEAU"
MARITIME OVERSEAS CORPORATION
43 West 42nd Street
New York, NY 10036

DATE August 14, 1987
OUR JOB NO. 3194
CUSTOMER'S ORDER NO.
CONTRACT NO.
INVOICE NO. 3194
TERMS NET

CUSTOMER CODE NUMBER: 11720

Duns No. 00-902-8580

S/T "OVERSEAS JUNEAU"

TO ACCOMPLISH REPAIRS AND BETTERMENTS TO THE SUBJECT VESSE,
AS PER ATTACHED SPECIFICATION.

Oregon

TOTAL AMOUNT DUE THIS INVOICE $1,599.00

Final Calley Net

PAST DUE PAYMENTS SHALL BEAR INTEREST AT THE HIGHEST LAWFUL RATE UNTIL REPAID, NOT TO EXCEED 1½% PER MONTH

NWMAR128053

NORTHWEST MARINE IRON WORKS

S/S "Overseas Juneas" & Owners
c/o Maritime Overseas Corporation

Work Order No. 87-000-001
Code 70 000

Item No. 1

Furnish labor, material and equipment to remove shore based spares from Dillinghams facility and relocate to suitable storage at NOrthwest Marine facility. Final disposition to be determined by owners.

Northwest Marine is to retain accurate record and inventory of Overseas shore based spares.

Item No. 2 Shore Based Spares

S/S "Overseas Juneau" - Shore Based Spares

DRS # 422-000
MOC #NPN
Location: Bay #8
Brass Ullage Covers (Used)
Quantity: 15
Request:

DSR #422-001
MOC # NPN
Location: Bay #8 (Warehouse)
Brass Shand-Jur Tank Gauges (Used)
Quantity: 15
Request:

DSR # 422-002
MOC # NPN

DSR # 422-003
MOC # NPN

DRS # 422-004
MOC # NPN

DSR # 422-005
MOC # NPN

DSR # 422-006
MOC # NPN

DSR # 422-007
MOC # NPN

DSR # 422-008
MOC # NPN

DSR # 422-009 (Scrap)
MOC # NPN
Location : Bay #8
Upper Rudder stock Bearing Brass (2 Pcs. - Used)
Quantity: 1
Request:

DSR # 422-010 (Need Face to Face)
MOC # NPN
Location: Bay #8
Valve (24") Hammer Blind (New)
Quantity: 1
Request:

DSR # 422-011
MOC # NPN

DSR # 422-012 (NMIW Can Have or Scrap)
MOC # NPN
Location: Bay #8
Tailshaft Nut and Key
Quantity: 1
Request:

DSR # 422-013 (Need Face to Face Dimension)
MOC # NPN
Location: Bay #8
Valve Gate (24") (New)
Quantity: 2
Request:

DSR # 422-014
MOC # NPN

DSR # 422-015
MOC # NPN
Location : South Bay 5, Bay 11 (Warehouse)
Rudder Stock Received from Monarch Machine 10/30/84 552-852-1
Quantity: 1
Request:

DSR # 422-016
MOC # NPN
Location: Bay #8 (Warehouse)
Rudder Sleeve Spincast Phosphor Bronze Casting Rough Machined
To 27" OD x 24 3/8" X 56" Long, Est weight 2,243.
Our P. O. # 21870
Supplier: Argo marine Their Order # 29N54719
Quantity: 1
Request:

DSR # 422-017
MOC #NPN

DSR # 422-018
MOC # NPN

DSR # 422-019
MOC # NPN

DSR # 422-020
MOC # NPN

DSR # 422-021
MOC # NPN

DSR # 422-022
MOC # NPN

DSR # 422-023
MOC # NPN

DSR # 422-024
MOC # NPN

DSR # 422-025
MOC # NPN

TOTAL AMOUNT DUE THIS INVOICE: $1,599.00

BC

NORTHWEST MARINE IRON WORKS

SHIP REPAIRERS
GENERAL MACHINE WORK
ENGINEERING

INVOICE

MAIL PAYMENT TO:
P.O. BOX 4000-58
PORTLAND, OREGON 97208

M/V "BOGASARI EMPAT" and Owners
c/o General Steamship Corporation
421 S. W. 6th Avenue, Suite 410
Portland, OR 97204

DATE	August 14, 1987
OUR JOB NO.	3203
CUSTOMER'S ORDER NO.	
CONTRACT NO.	
INVOICE NO.	3203
TERMS	NET

CUSTOMER CODE NUMBER: 06200

Duns No. 00-902-8580

M/V "BOGASARI EMPAT"

Vessel Labor

TO ACCOMPLISH REPAIRS AND BETTERMENTS TO THE SUBJECT VESSEL, AS PER ATTACHED SPECIFICATIONS.

TOTAL AMOUNT DUE THIS INVOICE $1,579.00

Final Calley Net

PAST DUE PAYMENTS SHALL BEAR INTEREST AT THE HIGHEST LAWFUL RATE UNTIL REPAID, NOT TO EXCEED 1½% PER MONTH

NWMAR128057

NORTHWEST MARINE IRON WORKS

M/V "BOGASARI EMPAT" and Owners
c/o General Steamship Corporation
421 S. W. 6th Ave., Suite 410
Portland, OR 97204

August 14, 1987
Job No. #3203

Agent: Lance Thain
Start: 8-5-87
Complete: 8-6-87

Item #1 Install Owner Furnished Radar Indicator and Cabling

Furnish labor and material to attend vessel at United Grain, Vancouver, Washington on 8-5-87.

Install the owner funished radar indicator and cabling. Provide a wooden base for the new indicator compatible with other base on the bridge. Make necessary cable penetrations and install cabling.

Item #2 Travel Time and Transportation Charges

Furnish travel time and transportation charges to accomplish repairs in Vancouver, Washington in accordance with Labor Union contracts and agreements.

TOTAL AMOUNT DUE THISH INVOICE $1,579.00

NORTHWEST MARINE IRON WORKS

SHIP REPAIRERS
GENERAL MACHINE WORK
ENGINEERING

MAIL PAYMENT TO:
P.O. BOX 4000-58
PORTLAND, OREGON 97208

INVOICE

M/V "CONTENDER ARGENT" & OWNERS
c/o Sea Containers Services Limited
Eversholt House
1631203 Eversholt Street
London, NW 11 BG ENGLAND

DATE	August 20, 1987
OUR JOB NO.	3202
CUSTOMER'S ORDER NO.	28746027
CONTRACT NO.	
INVOICE NO.	3202
TERMS	Net

CUSTOMER CODE NUMBER: 26115

Duns No. 00-902-8580

M/V "CONTENDER ARGENT"

TO ACCOMPLISH REPAIRS AND BETTERMENTS TO THE SUBJECT VESSEL,

AS PER ATTACHED SPECIFICATIONS 1 THRU 13.

Venturer Labor

TOTAL AMOUNT DUE THIS INVOICE: $11,540.10
==========
USD

Final
Collery
Net

PAST DUE PAYMENTS SHALL BEAR INTEREST AT THE HIGHEST LAWFUL RATE UNTIL REPAID, NOT TO EXCEED 1½% PER MONTH.

CORRESPONDENCE ADDRESS: PO BOX [illegible] PORTLAND, OREGON [illegible] PHONE [illegible]

NWMAR128059

BC

54 V

NORTHWEST MARINE IRON WORKS

SHIP REPAIRERS
GENERAL MACHINE WORK
ENGINEERING

MAIL PAYMENT TO:
P.O. BOX 4000-58
PORTLAND, OREGON 97208

INVOICE

G. C. Ridley & Company, LTD
11 The Ivory House
St. Katharine-By-The-Tower
London, ENGLAND E1 9AT

DATE August 25, 1987
OUR JOB NO. 3202
CUSTOMER'S ORDER NO. 28746027
CONTRACT NO.
INVOICE NO. 3202B
TERMS NET

CUSTOMER CODE NUMBER: 22910

Duns No. 00-902-8580

M/V "CONTENDER ARGENT"

TO ACCOMPLISH REPAIRS AND BETTERMENTS TO THE SUBJECT VESSEL, AS PER ATTACHED SPECIFICATIONS 1 THRU 13.

Vancouver Harbor

TOTAL AMOUNT DUE THIS INVOICE: $17,248.10

USD

FINAL
CALLEY
NET

PAST DUE PAYMENTS SHALL BEAR INTEREST AT THE HIGHEST LAWFUL RATE UNTIL REPAID, NOT TO EXCEED 1½% PER MONTH.

NWMAR128060

BC

53 ✓

NORTHWEST MARINE IRON WORKS

SHIP REPAIRERS
GENERAL MACHINE WORK
ENGINEERING

MAIL PAYMENT TO:
P.O. BOX 4000-58
PORTLAND, OREGON 97208

INVOICE

M/V "CONTENDER ARGENT" & OWNERS
c/o Sea Containers Services Limited
Eversholt House
1631203 Eversholt Street
London, NW 11 BG ENGLAND

DATE August 25, 1987
OUR JOB NO. 3202
CUSTOMER'S ORDER NO. 28746027
CONTRACT NO.
INVOICE NO. 3202A
TERMS CREDIT

CUSTOMER CODE NUMBER: 26115

Duns No. 00-902-8580

M/V "CONTENDER ARGENT"

TO CREDIT OUR INVOICE NO. 3202 DATED AUGUST 20, 1987 IN ITS ENTIRETY.

TOTAL CREDIT DUE THIS INVOICE: <$11,540.10>

Vancouver Salvage

See Rebilling Invoice No. 3202B dated August 25, 1987.

FINAL CALLEY CREDIT

PAST DUE PAYMENTS SHALL BEAR INTEREST AT THE HIGHEST LAWFUL RATE UNTIL REPAID, NOT TO EXCEED 1½% PER MONTH.

NWMAR128061

BC

63

NORTHWEST MARINE IRON WORKS

SHIP REPAIRERS
GENERAL MACHINE WORK
ENGINEERING

MAIL PAYMENT TO:
P.O. BOX 4000-58
PORTLAND, OREGON 97208

INVOICE

M/V "BOGASARE LIMA" and Owners
c/o General Steamship Corporation
421 S. W. 6th Avenue, Suite 410
Portland, OR 97204

DATE August 27, 1987
OUR JOB NO. 3212
CUSTOMER'S ORDER NO.
CONTRACT NO.
INVOICE NO. 3212
TERMS NET

CUSTOMER CODE NUMBER: 06200

Duns No. 00-902-8580

M/V "BOGASAR LIMA"

TO ACCOMPLISH REPAIRS AND BETTERMENTS TO THE SUBJECT VESSEL, AS PER ATTACHED SPECIFICATIONS.

Vancouver Labor

TOTAL AMOUNT DUE THIS INVOICE: $1,389.00

FINAL CALLEY NET

PAST DUE PAYMENTS SHALL BEAR INTEREST AT THE HIGHEST LAWFUL RATE UNTIL REPAID, NOT TO EXCEED 1½% PER MONTH.

CORRESPONDENCE ADDRESS P.O. BOX 3109 PORTLAND, OREGON 97208 PHONE (503) 285-7557

NORTHWEST MARINE IRON WORKS
INVOICES BY CALLEY

MONTH OF July 1987

CUSTOMER	SHIP	INVOICE NUMBER	INVOICE AMOUNT	DATE PAYMENT RECEIVED	PERCENT	AMOUNT	DATE PAID	CHECK NUMBER
Chantiers D e L' Atlantique	Ex-Noordam & Nieuw Amsterdam	3110-F	1,500.00	9/15/87	10%	150.00	10-21-87	216465
Sunrise Shipping	Agamemnon	3187	672.00	credit aug 87				
Maritime Overseas Corp	Overseas Boston	3181	50,409.00	8/18/87	10%	5,040.00	7-17-87	215756

NWMAR128063

BC

NORTHWEST MARINE IRON WORKS

/19

SHIP REPAIRERS
GENERAL MACHINE WORK
ENGINEERING

MAIL PAYMENT TO:
P.O. BOX 4000-58
PORTLAND, OREGON 97208

INVOICE

Chantiers De L'Atlantique
Alsthom-Atlantique
B. P. 400-44608
St. Nazaire, Cedex
FRANCE

Attn: J. F. Bruneteau

DATE July 13, 1987
OUR JOB NO. 3110
CUSTOMER'S ORDER NO.
CONTRACT NO.
INVOICE NO. 3110-F
TERMS NET

CUSTOMER CODE NUMBER: 02119

Duns No. 00-902-8580

WAREHUSE CHARGES FOR THE MAIN ENGINE GENERATOR STEP-UP GEARS, EX-NOORDAM AND NIEUW AMSTERDAM.

CHARGES FOR THE MONTH OF JUNE, 1987.

TOTAL AMOUNT DUE THIS INVOICE: $1,500.00 (USD)

PAST DUE PAYMENTS SHALL BEAR INTEREST AT THE HIGHEST LAWFUL RATE UNTIL REPAID, NOT TO EXCEED 1½% PER MONTH.

CORRESPONDENCE ADDRESS P.O. BOX 3109 PORTLAND, OREGON 97208 PHONE (503) 285-7557

NWMAR128064

NORTHWEST MARINE IRON WORKS

SHIP REPAIRERS
GENERAL MACHINE WORK
ENGINEERING

MAIL PAYMENT TO:
P.O. BOX 4000-58
PORTLAND, OREGON 97208

INVOICE

M/V "AGAMEMNON" and Owners
c/o Sunrise Shipping
1515 S. W. 15th, Suite 820
Portland, OR 97201

DATE July 14, 1987
OUR JOB NO. 3187
CUSTOMER'S ORDER NO.
CONTRACT NO.
INVOICE NO. 3187
TERMS NET

CUSTOMER CODE NUMBER: 29150

Duns No. 00-902-8580

TO ACCOMPLISH REPAIRS AND BETTERMENTS TO THE SUBJECT VESSEL, AT PER ATTACHED SPECIFICATION #1.

Oregon Labor

Final
CALLEY
NET

TOTAL AMOUNT THIS INVOICE $672.00

PAST DUE PAYMENTS SHALL BEAR INTEREST AT THE HIGHEST LAWFUL RATE UNTIL REPAID, NOT TO EXCEED 1½% PER MONTH.

CORRESPONDENCE ADDRESS P.O. BOX 3109 PORTLAND, OREGON 97208 PHONE (503) 285-7557

NWMAR128065

BC

NORTHWEST MARINE IRON WORKS

29

SHIP REPAIRERS
GENERAL MACHINE WORK
ENGINEERING

MAIL PAYMENT TO:
P.O. BOX 4000-58
PORTLAND, OREGON 97208

INVOICE

M/V "OVERSEAS BOSTON" & OWNERS
Maritime Overseas Corporation
43 West 42nd Street
New York, N.Y. 10036

DATE July 16, 1987
OUR JOB NO. 3181
CUSTOMER'S ORDER NO.
CONTRACT NO.
INVOICE NO. 3181
TERMS NET

CUSTOMER CODE NUMBER: 11720

Duns No. 00-902-8580

M/V "OVERSEAS BOSTON"

TO ACCOMPLISH REPAIRS AND BETTERMENTS TO THE SUBJECT VESSEL, AS PER ATTACHED SPECIFICATIONS NUMBER 1 THRU 8.

Oregon Steel

TOTAL AMOUNT DUE THIS INVOICE $50,409.00

FINAL
CALLEY
NET

PAST DUE PAYMENTS SHALL BEAR INTEREST AT THE HIGHEST LAWFUL RATE UNTIL REPAID, NOT TO EXCEED 1½% PER MONTH.

CORRESPONDENCE ADDRESS P.O. BOX 3109 PORTLAND, OREGON 97208 PHONE (503) 285-7557

NWMAR128066

NORTHWEST MARINE IRON WORKS
INVOICES BY CALLEY

MONTH OF June 1987

CUSTOMER	SHIP	INVOICE NUMBER	INVOICE AMOUNT	DATE PAYMENT RECEIVED	PERCENT	AMOUNT	DATE PAID	CHECK NUMBER
Chantiers De L'Atlantique	Ex-Noordam New Amsterdam	3110-E	1,500.00	8/7/87	10%	150.00	7-10-87	215703
International Ocean Graphic	Cancel Job 3167	3167	N/C					
Star Shipping Co.	Star Grindanger	3173	5,908.00	7/13/87				
Holland America	Cancel Job 3156	3156	N/C					
Holland America	Fido Restaurant Tampa	3159	2,130.00	7/24/87	10%	213.00	7-10-87	215703
Holland America	Rotterdam	3114-B	6,012.00	8/12/87	10%			
Holland America	Rotterdam	3114-C	1,272,780.00	7/31/87	10%	127,278.00	7-10-87	215703
Cascade Shipping	M/V Meng Summer	3179	1,077.00	7/23/87				
Fritz Maritime	Tokai Maru	3177	8,062.60	11/2/87				

NWMAR128067

Be

NORTHWEST MARINE IRON WORKS

SHIP REPAIRERS
GENERAL MACHINE WORK
ENGINEERING

MAIL PAYMENT TO:
P.O. BOX 4000-58
PORTLAND, OREGON 97208

INVOICE

Chantiers De L'Atlantique
Alsthom-Atlantique
B.P. 400-44608
St. Nazaire, Cedex
France

Attn: J. F. Bruneteau

CUSTOMER CODE NUMBER: 02119

DATE	June 1, 1987
OUR JOB NO.	3110
CUSTOMER'S ORDER NO.	
CONTRACT NO.	
INVOICE NO.	3110-E
TERMS	Net

Duns No. 00-902-8580

WAREHOUSE CHARGES FOR THE MAIN ENGINE GENERATOR STEP-UP GEARS,
EX-NOORDAM AND NIEW AMSTERDAM.

CHARGES FOR THE MONTH OF MAY, 1987.

TOTAL AMOUNT DUE THIS INVOICE: $1,500.00 (USD)

Partial
Calley
Net

PAST DUE PAYMENTS SHALL BEAR INTEREST AT THE HIGHEST LAWFUL RATE UNTIL REPAID, NOT TO EXCEED 1½% PER MONTH.

CORRESPONDENCE ADDRESS P.O. BOX 3109 PORTLAND, OREGON 97208 PHONE (503) 285-7557

NWMAR128068

NORTHWEST MARINE IRON WORKS

SHIP REPAIRERS
GENERAL MACHINE WORK
ENGINEERING

MAIL PAYMENT TO:
P.O. BOX 4000-58
PORTLAND, OREGON 97208

INVOICE

International Ocean Graphic

DATE	June 5, 1987
OUR JOB NO.	3167
CUSTOMER'S ORDER NO.	
CONTRACT NO.	
INVOICE NO.	3167
TERMS	N/C

CUSTOMER CODE NUMBER: 08510

Duns No. 00-902-8580

CANCEL JOB 3167 IN ITS ENTIRETY.

NO CHARGE
=========

Cancel
Calley
N/C

PAST DUE PAYMENTS SHALL BEAR INTEREST AT THE HIGHEST LAWFUL RATE UNTIL REPAID, NOT TO EXCEED 1½% PER MONTH.

CORRESPONDENCE ADDRESS P.O. BOX 3109 PORTLAND, OREGON 97208 PHONE (503) 285-7557

NWMAR128069

BC

/46

NORTHWEST MARINE IRON WORKS

SHIP REPAIRERS
GENERAL MACHINE WORK
ENGINEERING

MAIL PAYMENT TO:
P.O. BOX 4000-58
PORTLAND, OREGON 97208

INVOICE

M/V "STAR GRINDANGER" and Owners
c/o Star Shipping Company
Oregon Pioneer Building
Portland, Oregon 97204

DATE June 23, 1987
OUR JOB NO. 3173
CUSTOMER'S ORDER NO.
CONTRACT NO.
INVOICE NO. 3173
TERMS Net

CUSTOMER CODE NUMBER: 28470

Duns No. 00-902-8580

TO ACCOMPLISH REPAIRS AND BETTERMENTS TO THE SUBJECT VESSEL,
AS PER ATTACHED SPECIFICATIONS 1 THRU 2.

Oregon Sta Cor

TOTAL AMOUNT DUE THIS INVOICE: $5,908.00

Final
Calley
Net

PAST DUE PAYMENTS SHALL BEAR INTEREST AT THE HIGHEST LAWFUL RATE UNTIL REPAID, NOT TO EXCEED 1½% PER MONTH.

CORRESPONDENCE ADDRESS, P.O. BOX 3109, PORTLAND, OREGON 97208, PHONE (503) 285-7557

NWMAR128070

NORTHWEST MARINE IRON WORKS

SHIP REPAIRERS
GENERAL MACHINE WORK
ENGINEERING

MAIL PAYMENT TO:
P.O. BOX 4000-58
PORTLAND, OREGON 97208

INVOICE

Holland America Lines
Elliott Bay Office Park
300 Elliott Avenue W.
Seattle, Washington 98119

DATE	June 23, 1987
OUR JOB NO.	3156
CUSTOMER'S ORDER NO.	
CONTRACT NO.	
INVOICE NO.	3156
TERMS	B/P Only

CUSTOMER CODE NUMBER: 07203

Duns No. 00-902-8580

BOOK PURPOSE ONLY

(Internal)

Cancel our Job 3156 in its entirety.

NO CHARGE

Final
Called
B/P - h/c

PAST DUE PAYMENTS SHALL BEAR INTEREST AT THE HIGHEST LAWFUL RATE UNTIL REPAID, NOT TO EXCEED 1½% PER MONTH.

CORRESPONDENCE ADDRESS P.O. BOX 3109 PORTLAND, OREGON 97208 PHONE (503) 285-7557

NWMAR128071

NORTHWEST MARINE IRON WORKS

SHIP REPAIRERS
GENERAL MACHINE WORK
ENGINEERING

MAIL PAYMENT TO:
P.O. BOX 4000-58
PORTLAND, OREGON 97208

INVOICE

Holland American Line
Elliott Bay Office Park
300 Elliott Avenue W.
Seattle, Washington 98119

DATE June 24, 1987
OUR JOB NO. 3159
CUSTOMER'S ORDER NO.
CONTRACT NO.
INVOICE NO. 3159
TERMS Net 30 Days

CUSTOMER CODE NUMBER: 07203

Duns No. 00-902-8580

LIDO RESTAURANT LAMPS

Furnish labor and material to restore ten (10) Brass Lido Restaurant Lamps to original. Lamps were alleged to have been damaged by carrier.

LABOR:	71.0 S.T. Hours	@ 30.00 per hour	$2,130.00
		TOTAL AMOUNT DUE THIS INVOICE:	$2,130.00

Oregon Labor

Approved by: _____ _____
Mr. J. J. Adriaanse
Vice President - Technical Department
Date

Final
Called
Net 30

PAST DUE PAYMENTS SHALL BEAR INTEREST AT THE HIGHEST LAWFUL RATE UNTIL REPAID, NOT TO EXCEED 1½% PER MONTH.

NWMAR128072

BK

/50

NORTHWEST MARINE IRON WORKS

SHIP REPAIRERS
GENERAL MACHINE WORK
ENGINEERING

MAIL PAYMENT TO:
P.O. BOX 4000-58
PORTLAND, OREGON 97208

INVOICE

S/S "ROTTERDAM" and Owners
c/o Holland America Line
Elliott Bay Office Park
300 Elliott Avenue W.
Seattle, Washington 98119

DATE June 25, 1987
OUR JOB NO. 3114
CUSTOMER'S ORDER NO.
CONTRACT NO.
INVOICE NO. 3114-B
TERMS Net

CUSTOMER CODE NUMBER: 07203 ~~33260~~

Duns No. 00-902-8580

S/S "ROTTERDAM"

For furnishing labor, material and equipment to accomplish repairs as set forth under Item No. 1 of the attached specification.

Cooper Sabre

TOTAL AMOUNT DUE THIS INVOICE: $6,012.00
==========

Partial
Pallet
Net

PAST DUE PAYMENTS SHALL BEAR INTEREST AT THE HIGHEST LAWFUL RATE UNTIL REPAID, NOT TO EXCEED 1½% PER MONTH.

CORRESPONDENCE ADDRESS, P.O. BOX 3109, PORTLAND, OREGON 97208, PHONE (503) 285-7557

NWMAR128073

NORTHWEST MARINE IRON WORKS

SHIP REPAIRERS
GENERAL MACHINE WORK
ENGINEERING

MAIL PAYMENT TO:
P.O. BOX 4000-58
PORTLAND, OREGON 97208

INVOICE

S/S "ROTTERDAM" and Owners
c/o Holland America Line
Elliott Bay Office Park
300 Elliott Avenue W.
Seattle, Washington 98119

DATE June 25, 1987
OUR JOB NO. 3114
CUSTOMER'S ORDER NO.
CONTRACT NO.
INVOICE NO. 3114-C
TERMS Net

CUSTOMER CODE NUMBER: 07203 ~~33260~~

Duns No. 00-902-8580

S/S "ROTTERDAM"

For furnishing labor, material and equipment to accomplish repair as set forth under the attached specifications Item No. 1 thru 215 inclusive.

TOTAL AMOUNT DUE:	$2,772,780.00
LESS PREVIOUS BILLINGS:	(1,500,000.00)
TOTAL AMOUNT DUE THIS INVOICE:	$1,272,780.00

Final
Calley
Net

PAST DUE PAYMENTS SHALL BEAR INTEREST AT THE HIGHEST LAWFUL RATE UNTIL REPAID, NOT TO EXCEED 1½% PER MONTH.

CORRESPONDENCE ADDRESS: P.O. BOX 3109, PORTLAND, OREGON 97208, PHONE (503) 285-7557

NWMAR128074

BC 159

NORTHWEST MARINE IRON WORKS

SHIP REPAIRERS
GENERAL MACHINE WORK
ENGINEERING

MAIL PAYMENT TO:
P.O. BOX 4000-58
PORTLAND, OREGON 97208

INVOICE

M/V "Ming Summer" and Owners
c/o Cascade Shipping Company
806 S.W. Broadway - Suite 550
Portland, Oregon 97205

DATE June 25, 1987
OUR JOB NO. 3179
CUSTOMER'S ORDER NO.
CONTRACT NO.
INVOICE NO. 3179
TERMS Net

CUSTOMER CODE NUMBER: 01948

Duns No. 00-902-8580

M/V "MING SUMMER"

ITEM 1 - CONTROL ROOM A/C UNIT:

Furnish labor, material and equipment to disconnect and remove defective compressor and relays as per Chief Engineer.

Furnish labor, material and equipment to install new Owner furnished compressor. New unit was a different brand - requiring modification of freon piping and electrical wiring. Solder up freon piping - install new relays and rewire unit. Pressurize and leak test unit. Evacuated and charged system with freon. Upon start-up one of the new relays was found to be defective - installed another relay and started unit. During operation a liquid freon flood-back condition to compressor was observed. Found thermal expansion valve sensing bulb hanging loose next to suction line. Cleared suction line to allow good contact for sensing bulb - furnish and install clamps for proper attachment of bulb.

Vancouver Site

TOTAL AMOUNT DUE THIS INVOICE..... $1,077.00

Final Called Net

PAST DUE PAYMENTS SHALL BEAR INTEREST AT THE HIGHEST LAWFUL RATE UNTIL REPAID, NOT TO EXCEED 1½% PER MONTH.

NWMAR128075

BC

✓ 60

NORTHWEST MARINE IRON WORKS

SHIP REPAIRERS
GENERAL MACHINE WORK
ENGINEERING

MAIL PAYMENT TO:
P.O. BOX 4000-58
PORTLAND, OREGON 97208

INVOICE

M/V "TOKAI MARU" and Owners
c/o Fritz Maritime Agencies, Inc.
P.O.Box 2964
Portland, Oregon 97208

DATE June 30,1987
OUR JOB NO. 3177
CUSTOMER'S ORDER NO.
CONTRACT NO.
INVOICE NO. 3177
TERMS Net

CUSTOMER CODE NUMBER: 05065

Duns No. 00-902-8580

M/V "TOKAI MARU"

For furnishing labor, material and equipment to accomplish repairs as set forth under Item Nos. 1 thru 5 of the attached specification.

For guarantee labor

TOTAL AMOUNT DUE THIS INVOICE..... $8,062.60

Final
~~W Gallery~~
Net

PAST DUE PAYMENTS SHALL BEAR INTEREST AT THE HIGHEST LAWFUL RATE UNTIL REPAID, NOT TO EXCEED 1½% PER MONTH.

NWMAR128076

NORTHWEST MARINE IRON WORKS
INVOICES BY CALLEY

MONTH OF May 1987

CUSTOMER	SHIP	INVOICE NUMBER	INVOICE AMOUNT	DATE PAYMENT RECEIVED	PERCENT	AMOUNT	DATE PAID	CHECK NUMBER
Chantiers De L'Atlantique	ex-Noordam Nieuw Amsterdam	3110-D	1,500.00	7/7/87	10%	150.00	7-10-87	215703
Holland America	S/S Rotterdam	3114	750,000.00	5/20/87	10%	75,000.00	7-10-87	215703
Hoegh Lines	MV Hoegh Duke	3164	N/C	—				
Holland America	S/S Rotterdam	3114-A	750,000.00	5/29/87	10%	75,000.00	7-10-87	215703

NWMAR128077

NORTHWEST MARINE IRON WORKS

SHIP REPAIRERS
GENERAL MACHINE WORK
ENGINEERING

MAIL PAYMENT TO:
P.O. BOX 4000-58
PORTLAND, OREGON 97208

INVOICE

Chantiers De L'Atlantique
Alsthom-Atlantique
B.P. 400-44608
St. Nazaire, Cedex
France
Attn: J. F. Bruneteau

CUSTOMER CODE NUMBER: 02119

DATE: May 1, 1987
OUR JOB NO.: 3110
CUSTOMER'S ORDER NO.:
CONTRACT NO.:
INVOICE NO.: 3110-D
TERMS: Net

Duns No. 00-902-8580

WAREHOUSE CHARGES FOR THE MAIN ENGINE GENERATOR STEP-UP GEARS, EX-NOORDAM AND NIEW AMSTERDAM.

CHARGES FOR MONTH OF APRIL, 1987.

TOTAL AMOUNT DUE THIS INVOICE: $1,500.00 (USD)

Callery
Partial
net

PAST DUE PAYMENTS SHALL BEAR INTEREST AT THE HIGHEST LAWFUL RATE UNTIL REPAID, NOT TO EXCEED 1½% PER MONTH.

CORRESPONDENCE ADDRESS P.O. BOX 3109 PORTLAND, OREGON 97208 PHONE (503) 285-7557

NWMAR128078

BC

118

NORTHWEST MARINE IRON WORKS

SHIP REPAIRERS
GENERAL MACHINE WORK
ENGINEERING

MAIL PAYMENT TO:
P.O. BOX 4000-58
PORTLAND, OREGON 97208

INVOICE

Holland America Line
Elliott Bay Office Park
300 Elliott Avenue W.
Seattle, Washington 98119

Attention: Mr. J. L. Adriaanse

CUSTOMER CODE NUMBER: 07203

DATE: May 19, 1987
OUR JOB NO.: 3114
CUSTOMER'S ORDER NO.:
CONTRACT NO.:
INVOICE NO.: 3114
TERMS: Net

Duns No. 00-902-8580

S/S ROTTERDAM

PROGRESS BILLING NUMBER 1

TO BILL FOR WORK IN PROGRESS FROM MAY 13, 1987 TO MAY 20, 1987. $750,000.00

TOTAL AMOUNT DUE THIS INVOICE: $750,000.00

Approved by: _____

Mr. J. L. Adriaanse - May 19, 1987

Partial
Calley
net

PAST DUE PAYMENTS SHALL BEAR INTEREST AT THE HIGHEST LAWFUL RATE UNTIL REPAID, NOT TO EXCEED 1½% PER MONTH.

CORRESPONDENCE ADDRESS P.O. BOX 3109 PORTLAND, OREGON 97208 PHONE (503) 285-7557

NWMAR128079

BC 1/28

NORTHWEST MARINE IRON WORKS

SHIP REPAIRERS
GENERAL MACHINE WORK
ENGINEERING

MAIL PAYMENT TO:
P.O. BOX 4000-58
PORTLAND, OREGON 97208

INVOICE

M/V HOEGH DUKE

c/o Hoegh Lines Agencies
1 S.W. Columbia Street
Portland, Oregon 97258

DATE May 20, 1987
OUR JOB NO. 3164
CUSTOMER'S ORDER NO.
CONTRACT NO.
INVOICE NO. 3164
TERMS B/P Only

CUSTOMER CODE NUMBER: 07200

Duns No. 00-902-8580

M/V HOEGH DUKE

BOOK PURPOSE ONLY INVOICE

To cancel our Job 3164 in its entirety. Job cancelled by customer.

NO CHARGE
=========

Called
Final
n/c

PAST DUE PAYMENTS SHALL BEAR INTEREST AT THE HIGHEST LAWFUL RATE UNTIL REPAID, NOT TO EXCEED 1½% PER MONTH.

CORRESPONDENCE ADDRESS P.O. BOX 3109 PORTLAND, OREGON 97208 PHONE (503) 285-7557

NWMAR128080

NORTHWEST MARINE IRON WORKS

SHIP REPAIRERS
GENERAL MACHINE WORK
ENGINEERING

MAIL PAYMENT TO:
P.O. BOX 4000-58
PORTLAND, OREGON 97208

INVOICE

Holland America Line
Elliott Bay Office Park
300 Elliott Avenue W.
Seattle, Washington 98119

Attention: Mr. J. L. Adriaanse

CUSTOMER CODE NUMBER: 07203

DATE	May 26, 1987
OUR JOB NO.	3114
CUSTOMER'S ORDER NO.	
CONTRACT NO.	
INVOICE NO.	3114-A
TERMS	Net

Duns No. 00-902-8580

S/S "ROTTERDAM"

PROGRESS BILLING NUMBER 2

TO BILL FOR WORK IN PROGRESS FROM MAY 20, 1987 TO MAY 26, 1987.	$750,000.00
TOTAL AMOUNT DUE THIS INVOICE:	$750,000.00

Approved by: _____

Mr. J. L. Adriaanse - May 28, 1987

Partial Calley Net

PAST DUE PAYMENTS SHALL BEAR INTEREST AT THE HIGHEST LAWFUL RATE UNTIL REPAID, NOT TO EXCEED 1½% PER MONTH.

NWMAR128081

NORTHWEST MARINE IRON WORKS
INVOICES BY CALLEY

MONTH OF April 1987

CUSTOMER	SHIP	INVOICE NUMBER	INVOICE AMOUNT	DATE PAYMENT RECEIVED	PERCENT	AMOUNT	DATE PAID	CHECK NUMBER
Chantiers De L'Atlantique	EX-Noordam Nieuw Amsterdam	3110-C	1,500.00	5/29/87				
Bermuda Star Line	S/S Liberte	3150	2,088.56	5/28/87				

X

X

NWMAR128082

Bc

✓29

NORTHWEST MARINE IRON WORKS

SHIP REPAIRERS
GENERAL MACHINE WORK
ENGINEERING

MAIL PAYMENT TO:
P.O. BOX 4000-58
PORTLAND, OREGON 97208

INVOICE

Chantiers De L'Atlantique
Alsthom-Atlantique
B.P. 400-44608
St. Nazaire, Cedex
France

DATE April 14, 1987
OUR JOB NO. 3110
CUSTOMER'S ORDER NO.
CONTRACT NO.
INVOICE NO. 3110-C
TERMS Net

CUSTOMER CODE NUMBER: 02119

Attention: J. F. Bruneteau

Duns No. 00-902-8580

WAREHOUSE CHARGES FOR THE MAIN ENGINE GENERATOR STEP-UP

GEARS, EX-NOORDAM AND NIEUW AMSTERDAM.

MONTH OF MARCH, 1987

TOTALL AMOUNT DUE THIS INVOICE $1,500.00 (USD

PARTIAL
CALLEY
NET

PAST DUE PAYMENTS SHALL BEAR INTEREST AT THE HIGHEST LAWFUL RATE UNTIL REPAID, NOT TO EXCEED 1½% PER MONTH.

NWMAR128083

NORTHWEST MARINE IRON WORKS

SHIP REPAIRERS
GENERAL MACHINE WORK
ENGINEERING

MAIL PAYMENT TO:
P.O. BOX 4000-58
PORTLAND, OREGON 97208

INVOICE

S/S "LIBERTE" & Owners
c/o Bermuda Star Line
1086 Teaneck Road
Teaneck, N.J. 07666

DATE April 17, 1987
OUR JOB NO. 3150
CUSTOMER'S ORDER NO.
CONTRACT NO.
INVOICE NO. 3150
TERMS Net 30

CUSTOMER CODE NUMBER: 01060

Duns No. 00-902-8580

1) STACK LOGO: $1,720.00

Furnish labor, material to fabricate, using Owner's furnished template, port and starboard stack logos.
Logos to be fabricated using 1/4" A-36 steel and in two (2) sections to facilitate handling and installation. Logo to be sandblasted and primed with inorganic zinc.

2) HANDLING & TRANSPORTATION CHARGES: $ 368.56

Furnish labor, material and equipment to palletize logos with adequate protection for shipment to vessel in San Francisco. Ship logos to vessel using commercial carrier.

TOTAL AMOUNT DUE THIS INVOICE $2,088.56

FINAL CHECK NET 30

PAST DUE PAYMENTS SHALL BEAR INTEREST AT THE HIGHEST LAWFUL RATE UNTIL REPAID, NOT TO EXCEED 1½% PER MONTH.

CORRESPONDENCE ADDRESS P.O. BOX 3109 PORTLAND, OREGON 97208 PHONE (503) 285-7557

Dec 20, 1990

Marcon

4290	1,144.70
4921	41.54
4922	4,076.55
	5,262.79

NORTHWEST MARINE IRON WORKS, 5555 N. CHANNEL AVE. PORTLAND, OR 97217

NORTHWEST MARINE IRON WORKS
5555 N. CHANNEL AVE. PORTLAND, OREGON 97217
PHONE: (503) 285-7557

FOLIO NUMBER 002150

CHECK NUMBER 2150

WELLS FARGO BANK
San Diego Office - San Diego, CA 92101

16-24/650
1220(7)

CHECK DATE 12 20 90

PAY THIS AMOUNT
$5,262.79

PAY TO THE ORDER OF

Marcon Services
6900 S.E. Riverside Drive #11
Vancouver, WA 98664

(b) (6)

NORTHWEST MARINE, INC.

JOB COST ADJUSTMENT FORM **ADJ. NUMBER:** _____

TRANS. DATE: _____

DESCRIPTION: P/R Check #2150

JOB#	G/L ACCT	TYPE	DEBIT	CREDIT	HOURS
N 4290 - Unknown			1,144.70		
N 4921			41.54		
N 4922			4,076.55		
	1050-1			5,262.79	

EXPLANATION OR NOTES:

Marcom

Prepared by: S Ferro

NICK CALLEY
JOB SUMMARY
18-Dec-90

	4290	4921	4922
LABOR	3,402	0	1,201
VAR OVERHEAD	1,982	0	869
FIXED OVERHEAD	1,913	0	839
MATERIALS	1,200	0	5,641
SUBS	0	0	510
INVENTORY	0	0	0
MILEAGE	0	0	0
PORT	0	0	0
PORT U/R	0	0	0
COMMISSION	1,145	42	4,077
TOTAL COSTS	9,642	42	13,137
REVENUE	11,447	415	40,768
NET PROFIT	1,805	374	27,631
PERCENTAGE	15.77%	90.00%	67.78%
REV RECOVERY RATE	48.68	ERR	372.44
HOURS	187	0	82

#5,262.79

MARCON SERVICES
6900 S.E. Riverside Drive #11
Vancouver, WA 98664
I.D. No. 91-1392055
M/V CONTESSA
Invoice 1493.01

Job # 4290

Date 11/15/90

Payment for contracting services

~~$1,247.40~~

1,144.70

Gerl Steamship
11/15/90 #149301 #12,474.00

Pymt recd 12/06/90 <11,447.00>
Credit Memo <1,027.00>

0

MARCON SERVICES
6900 S.E. Riverside Drive #11
Vancouver, WA 98664
I.D. No. 91-1392055

M/V WESTERDAM
Invoice 1434.02

Job # 4921

Date 10/26/90

Payment for contracting services

$ 41.54

H.A.L.
10/26/90 Inv 143402 $415.41

~~[illegible]~~ pymt S/H/B Applied to different invoice

payment recd 12/17/90 $415.41

MARCON SERVICES
6900 S.E. Riverside Drive #11
Vancouver, WA 98664
I.D. No. 91-1392055

M/V NOORDAM
Invoice 1382.04

Job # 4922

Date 10/5/90

Payment for contracting services

~~$4,067.78~~
4,076.55

Holland America
10/05/90 138204 #40,765.52

Pymnt Recd 12/17/90 #40,768.52

NORTHWEST MARINE IRON WORKS
INVOICES BY CALLEY

MONTH OF Dec 1990

	CUSTOMER	SHIP	INVOICE DATE	INVOICE NUMBER	INVOICE AMOUNT	INVOICE PAYMENT DATE	COMMISSION PERCENT	COMMISSION AMOUNT	COMMISSION DATE PAID	COMMISSION CHECK NUMBER
N4922	H.A.L.	Noordam	12/06/90	154604	<683.00>	[redacted]	Cancel 9/90 Inv# 137403			
N4925	Total Maritime	Barbland	12/06/90	154701	462.00					
N4295	Chantiers D'Atlantique		12/06/90	154847	1750.00		10%	175.00		
N4252	Transmarine	Ansgarita	12/07/90	155302	<800.00>	6/90 Inv	X	X	X	X
N4290	BT Shipping	Contessa	12/11/90	155802	<1,027.00>	12/06/90	10%	<102.70>	12/20/90	2150
N4737	Mobil Oil	Mobil Arctic	12/12/90	155901	224,500.00		10%	22,450.00		

NWMAR128091

MAIL PAYMENT TO: P.O. BOX 4000-58 • PORTLAND • OREGON • 97208

NORTH WEST MARINE INC.

INVOICE

M/V "NOORDAM" and Owners
c/o Holland America Lines
300 Elliott Avenue West
Seattle, Washington 98119

DATE	12/6/90
OUR JOB NO.	4922
CUSTOMER'S ORDER NO.	
CONTRACT NO.	
INVOICE NO.	1546.04
TERMS	CREDIT

CUSTOMER CODE NUMBER:

Duns No. 00-902-8580

M/V "NOORDAM"

To cancel invoice number 1374.03 in its entirety.

Total Credit Due ($683.00)

ENTERED DEC 07 1990

PAST DUE PAYMENTS SHALL BEAR INTEREST AT THE HIGHEST LAWFUL RATE UNTIL REPAID, NOT TO EXCEED 1 1/2% PER MONTH

CORRESPONDENCE ADDRESS : P.O. BOX 3108 • PORTLAND • OREGON • 97208 PHONE: (503) 285-7557

NWMAR128092

MAIL PAYMENT TO: P.O. BOX 4000-58 • PORTLAND • OREGON • 97208

NORTH WEST MARINE INC.

Fees

INVOICE

M/V "BARKALD" and Owners
c/o Total Maritime Service, Ltd.
4475 S.W. Scholls Ferry Rd., Suite 252
Portland, Oregon 97225

DATE	12/6/90
OUR JOB NO.	4295
CUSTOMER'S ORDER NO.	#708CT
CONTRACT NO.	
INVOICE NO.	1547.01
TERMS	NET

CUSTOMER CODE NUMBER:

Duns No. 00-902-8580

M/V "BARKALD"

Provided labor, equipment and material to accomplish boom testing in accordance with specifications.

10 hours Straight Time @ $35.00	$350.00
2 hours Premium Time @ $17.00	34.00
Truck	75.00
12 miles @ .25/mile	3.00
Total Amount Due This Invoice	$462.00

ENTERED DEC 07 1990

PAST DUE PAYMENTS SHALL BEAR INTEREST AT THE HIGHEST LAWFUL RATE UNTIL REPAID, NOT TO EXCEED 1 1/2% PER MONTH

CORRESPONDENCE ADDRESS : P.O. BOX 3108 • PORTLAND • OREGON • 97208 PHONE: (503) 285-7557

NWMAR128093

MAIL PAYMENT TO: P.O. BOX 4000-58 • PORTLAND • OREGON • 97208

NORTH WEST MARINE INC.

Ardo

INVOICE

Chantiers De L'Atlantique
Alshom-Atlantique
B.P. 400-44608
St. Nazaire, Cedex
FRANCE

DATE	12/6/90
OUR JOB NO.	3110
CUSTOMER'S ORDER NO.	
CONTRACT NO.	
INVOICE NO.	1548.47
TERMS	Net

CUSTOMER CODE NUMBER:

Duns No. 00-902-8580

Warehouse charges for the main engine generator
step-up gears, Ex-NOORDAM and NIEUW AMSTERDAM.

Charges for the month of December, 1990

Total Amount Due This Invoice $1,750.00

ENTERED DEC 07 1990

PAST DUE PAYMENTS SHALL BEAR INTEREST AT THE HIGHEST LAWFUL RATE UNTIL REPAID, NOT TO EXCEED 1 1/2% PER MONTH

CORRESPONDENCE ADDRESS : P.O. BOX 3108 • PORTLAND • OREGON • 97208 PHONE: (503) 285-7557

NWMAR128094

MAIL PAYMENT TO: P.O. BOX 4000-58 • PORTLAND • OREGON • 97208

NORTH WEST MARINE INC.

INVOICE

Ansgaritor
Transmarine Navigation

DATE 7 DECEMBER 1990
OUR JOB NO. N4232
CUSTOMER'S ORDER NO.
CONTRACT NO.
INVOICE NO. 1553-02
TERMS

CUSTOMER CODE NUMBER:

Duns No. 00-902-8580

CREDIT MEMO
(Internal Only)

Write off as uncollectable per direction from J. Handley

ENTERED DEC 13 1990

Total Amount This Credit $800.00

Applied To: 1162-01

Douglas M. Temple
Asst. Controller

PAST DUE PAYMENTS SHALL BEAR INTEREST AT THE HIGHEST LAWFUL RATE UNTIL REPAID, NOT TO EXCEED 1 1/2% PER MONTH

CORRESPONDENCE ADDRESS : P.O. BOX 3108 • PORTLAND • OREGON • 97208 PHONE: (503) 285-7557

NWMAR128095

MAIL PAYMENT TO: P.O. BOX 4000-58 • PORTLAND • OREGON • 97208

NORTH WEST MARINE INC.

Fens

INVOICE

M/V "CONTESSA" and Owners
c/o B.T. Shipping Co.
75 Moreland Road
Croydon, Surrey CRO 6HA
United Kingdom

DATE	12/11/90
OUR JOB NO.	4290
CUSTOMER'S ORDER NO.	
CONTRACT NO.	
INVOICE NO.	1558.02
TERMS	Credit Memo

CUSTOMER CODE NUMBER:

Duns No. 00-902-8580

M/V CONTESSA

Credit per fax of 11/28/90 per Nicholas Calley

Total Credit ($1,027.00)

Appy to 149301

ENTERED DEC 13 1990

PAST DUE PAYMENTS SHALL BEAR INTEREST AT THE HIGHEST LAWFUL RATE UNTIL REPAID, NOT TO EXCEED 1 1/2% PER MONTH

CORRESPONDENCE ADDRESS : P.O. BOX 3108 • PORTLAND • OREGON • 97208 PHONE: (503) 285-7557

NWMAR128096

MAIL PAYMENT TO: P.O. BOX 4000-58 • PORTLAND • OREGON • 97208

NORTH WEST MARINE INC.

Terco

INVOICE

S/S "MOBIL ARCTIC" and Owners
c/o Mobil Oil Corporation
3225 Gallows Road
Fairfax, Virginia 20037-0001

Attention: Mr. Svein Ljone

DATE	12/12/90
OUR JOB NO.	4737
CUSTOMER'S ORDER NO.	121
CONTRACT NO.	
INVOICE NO.	1559.01
TERMS	Net

CUSTOMER CODE NUMBER:

Duns No. 00-902-8580

S/S MOBIL ARCTIC

For furnishing labor, material and equipment to accomplish repairs as set forth in the following specifications.

Total Negotiated and Agreed Price $224,500.00
(P.H. - N.G.C. 12/11/90)

Port Engineer Nick Calloez

ENTERED DEC 13 1990

PAST DUE PAYMENTS SHALL BEAR INTEREST AT THE HIGHEST LAWFUL RATE UNTIL REPAID, NOT TO EXCEED 1 1/2% PER MONTH

CORRESPONDENCE ADDRESS : P.O. BOX 3108 • PORTLAND • OREGON • 97208 PHONE: (503) 285-7557

NWMAR128097

NORTHWEST MARINE IRON WORKS
INVOICES BY CALLEY

MONTH OF Nov 1990

	CUSTOMER	SHIP	INVOICE DATE	INVOICE NUMBER	INVOICE AMOUNT	INVOICE PAYMENT DATE	COMMISSION PERCENT	COMMISSION AMOUNT	COMMISSION DATE PAID	COMMISSION CHECK NUMBER
N4921	Holland America	Westerdam	11/01/90	147107	547,590.00	11/30/90	Westerdam		12/13/90	2149
N4921	"	"	11/01/90	147208	<500,000.00>	11/30/90	Westerdam		12/13/90	2149
N4906	Bermuda Star	write off	11/13/90	148101	<39,723.08>	X				
N4195	Bermuda Star	write off	11/13/90	148201	<2,866.00>	X				
N4232	Northwest Shore	write off	11/13/90	148301	<6,803.00>	X				
N4290	Gerl Steamship	Contessa	11/15/90	149301	12,474.00	12/26/90	10%	1,247.40	12/20/90	2150
N4296	IMT	Barkald	11/15/90	149401	6,158.00		10%	615.80		
N3110	Chantiers D'Atlantique		11/15/90	149546	1,750.00		10%	175.00		
N4297	Int'l Shipping	Rubin Daga	11/15/90	149601	16,569.00	11/28/90	10%	1,656.90	12/13/90	2149
N4298	InterOcean Steam	Krim	11/27/90	150101	33,377.00	12/04/90	10%	3,337.70	12/13/90	2149
N4921	HAL	Westerdam	11/30/90	151708	500,000.00	11/30/90	Westerdam		12/13/90	2149
N4921	HAL	Westerdam	11/30/90	151809	<500,000.00>	11/30/90	Westerdam		12/13/90	2149

NWMAR128098

MAIL PAYMENT TO: P.O. BOX 4000-58 • PORTLAND • OREGON • 97208

NORTH WEST MARINE INC.

INVOICE

M/S "WESTERDAM" and Owners
c/o Holland America Line
300 Elliott Avenue West
Seattle, Washington 98119

DATE	11/01/90
OUR JOB NO.	4921
CUSTOMER'S ORDER NO.	
CONTRACT NO.	
INVOICE NO.	1471.07
TERMS	NET

CUSTOMER CODE NUMBER:

Duns No. 00-902-8580

M/S WESTERDAM

For furnishing labor, material and equipment to accomplish repairs as set forth in the attached specifications.

Total Amount Due This Invoice $547,590.00

ENTERED NOV 02 1990

PAST DUE PAYMENTS SHALL BEAR INTEREST AT THE HIGHEST LAWFUL RATE UNTIL REPAID, NOT TO EXCEED 1 1/2% PER MONTH

CORRESPONDENCE ADDRESS : P.O. BOX 3108 • PORTLAND • OREGON • 97208 PHONE: (503) 285-7557

MAIL PAYMENT TO: P.O. BOX 4000-58 • PORTLAND • OREGON • 97208

NORTH WEST MARINE INC.

Ferro

INVOICE

M/S "WESTERDAM" and Owners
c/o Holland America Line
300 Elliott Avenue West
Seattle, Washington 98119

DATE	11/01/90
OUR JOB NO.	4921
CUSTOMER'S ORDER NO.	
CONTRACT NO.	
INVOICE NO.	1472.08
TERMS	NET

CUSTOMER CODE NUMBER:

Duns No. 00-902-8580

M/S WESTERDAM
CREDIT INVOICE

To credit Progress Payment billed on Invoice 1403.01

CREDIT DUE $(500,000.00)

ENTERED NOV 02 1990

PAST DUE PAYMENTS SHALL BEAR INTEREST AT THE HIGHEST LAWFUL RATE UNTIL REPAID, NOT TO EXCEED 1 1/2% PER MONTH

CORRESPONDENCE ADDRESS : P.O. BOX 3108 • PORTLAND • OREGON • 97208 PHONE: (503) 285-7557

MAIL PAYMENT TO: P.O. BOX 4000-58 • PORTLAND • OREGON • 97208

NORTH WEST MARINE INC.

INVOICE

SS BERMUDA STAR AND OWNERS

DATE 13 NOVEMBER 1990
OUR JOB NO. N4906
CUSTOMER'S ORDER NO.
CONTRACT NO.
INVOICE NO. 1481-01
TERMS

CUSTOMER CODE NUMBER:

Duns No. 00-902-8580

CREDIT MEMO
(Internal Only)

Write off outstanding amounts. Billed in excess of negotiated amount.

Total Amount This Credit $39,723.08

Applied To: 1058-11

ENTERED NOV 16 1990

Douglas M. Temple
Asst. Controller

PAST DUE PAYMENTS SHALL BEAR INTEREST AT THE HIGHEST LAWFUL RATE UNTIL REPAID, NOT TO EXCEED 1 1/2% PER MONTH

CORRESPONDENCE ADDRESS : P.O. BOX 3108 • PORTLAND • OREGON • 97208 PHONE: (503) 285-7557

NWMAR128101

MAIL PAYMENT TO: P.O. BOX 4000-58 • PORTLAND • OREGON • 97208

NORTH WEST MARINE INC.

INVOICE

NATIONAL SANITATION INSPECTION SERVICE

DATE 13 NOVEMBER 1990
OUR JOB NO. N4195
CUSTOMER'S ORDER NO.
CONTRACT NO.
INVOICE NO. 1482-01
TERMS

CUSTOMER CODE NUMBER:

Duns No. 00-902-8580

CREDIT MEMO
(Internal Only)

Write off disputed amounts. Submitted to collection agency.

Total Amount This Credit $2,866.00

Applied To: 4195-01

ENTERED NOV 16 1990

Douglas M. Temple
Asst. Controller

PAST DUE PAYMENTS SHALL BEAR INTEREST AT THE HIGHEST LAWFUL RATE UNTIL REPAID, NOT TO EXCEED 1 1/2% PER MONTH

CORRESPONDENCE ADDRESS : P.O. BOX 3108 • PORTLAND • OREGON • 97208 PHONE: (503) 285-7557

NWMAR128102

MAIL PAYMENT TO: P.O. BOX 4000-58 • PORTLAND • OREGON • 97208

NORTH WEST MARINE INC.

INVOICE

Nortween Slevic

DATE 13 NOVEMBER 1990
OUR JOB NO. N4232
CUSTOMER'S ORDER NO.
CONTRACT NO.
INVOICE NO. 1483-01
TERMS

CUSTOMER CODE NUMBER:

Duns No. 00-902-8580

CREDIT MEMO
(Internal Only)

Write off disputed amounts. Deamed uncollectable by collection agency.

Total Amount This Credit $6,803.00

Applied To: 1045-03

ENTERED NOV 16 1990

Douglas M. Temple
Asst. Controller

PAST DUE PAYMENTS SHALL BEAR INTEREST AT THE HIGHEST LAWFUL RATE UNTIL REPAID, NOT TO EXCEED 1 1/2% PER MONTH

CORRESPONDENCE ADDRESS : P.O. BOX 3108 • PORTLAND • OREGON • 97208 PHONE: (503) 285-7557

NWMAR128103

MAIL PAYMENT TO: P.O. BOX 4000-58 • PORTLAND • OREGON • 97208

NORTH WEST MARINE INC.

INVOICE

M/V CONTESSA and Owners
General Steamship Corp., Ltd.
421 S.W. Sixth, Suite 402
Portland, Oregon 97204

DATE	11/15/90
OUR JOB NO.	4290
CUSTOMER'S ORDER NO.	
CONTRACT NO.	
INVOICE NO.	1493.01
TERMS	NET ON RECEIPT OF INVOICE

CUSTOMER CODE NUMBER:

Duns No. 00-902-8580

M/V CONTESSA

Furnished labor, material and equipment to accomplish work in accordance with attached specifications.

Total Amount This Invoice $12,474.00

ENTERED NOV 16 1990

PAST DUE PAYMENTS SHALL BEAR INTEREST AT THE HIGHEST LAWFUL RATE UNTIL REPAID, NOT TO EXCEED 1 1/2% PER MONTH

CORRESPONDENCE ADDRESS : P.O. BOX 3108 • PORTLAND • OREGON • 97208 PHONE: (503) 285-7557

NWMAR128104

MAIL PAYMENT TO: P.O. BOX 4000-58 • PORTLAND • OREGON • 97208

NORTH WEST MARINE INC.

INVOICE

M/V BARKALD and Owners
IMT
3556 N.W. Front, Suite 350
Portland, Oregon 97210

DATE	11/15/90
OUR JOB NO.	4296
CUSTOMER'S ORDER NO.	
CONTRACT NO.	
INVOICE NO.	1494.01
TERMS	NET

CUSTOMER CODE NUMBER:

Duns No. 00-902-8580

M/V BARKALD

Furnished labor, material and equipment to accomplish work in accordance with attached specifications.

Total Amount This Invoice $6,158.00

ENTERED NOV 16 1990

PAST DUE PAYMENTS SHALL BEAR INTEREST AT THE HIGHEST LAWFUL RATE UNTIL REPAID, NOT TO EXCEED 1 1/2% PER MONTH

CORRESPONDENCE ADDRESS : P.O. BOX 3108 • PORTLAND • OREGON • 97208 PHONE: (503) 285-7557

NWMAR128105

MAIL PAYMENT TO: P.O. BOX 4000-58 • PORTLAND • OREGON • 97208

NORTH WEST MARINE INC.

INVOICE

Chantiers De L'Atlantique
Alshom-Atlantique
B.P. 400-44608
St. Nazaire, Cedex
FRANCE

DATE	11/15/90
OUR JOB NO.	3110
CUSTOMER'S ORDER NO.	
CONTRACT NO.	
INVOICE NO.	1495.46
TERMS	NET

CUSTOMER CODE NUMBER:

Duns No. 00-902-8580

Warehouse charges for the main engine generator step-up gears, Ex-NOORDAM and NIEUW AMSTERDAM.

Charges for the month of November, 1990

Total Amount This Invoice $1,750.00

ENTERED NOV 16 1990
AP

PAST DUE PAYMENTS SHALL BEAR INTEREST AT THE HIGHEST LAWFUL RATE UNTIL REPAID, NOT TO EXCEED 1 1/2% PER MONTH

CORRESPONDENCE ADDRESS : P.O. BOX 3108 • PORTLAND • OREGON • 97208 PHONE: (503) 285-7557

NWMAR128106

MAIL PAYMENT TO: P.O. BOX 4000-58 • PORTLAND • OREGON • 97208

NORTH WEST MARINE INC.

INVOICE

M/V "ROBIN DOGA" and Owners
c/o International Shipping
421 S.W. Sixth
Portland, Oregon 97205

DATE	11/15/90
OUR JOB NO.	4297
CUSTOMER'S ORDER NO.	
CONTRACT NO.	
INVOICE NO.	1496.01
TERMS	NET

CUSTOMER CODE NUMBER:

Duns No. 00-902-8580

M/V ROBIN DOGA

Furnished labor, material and equipment to accomplish work in accordance with attached specifications.

Total Amount This Invoice $16,569.00

PAST DUE PAYMENTS SHALL BEAR INTEREST AT THE HIGHEST LAWFUL RATE UNTIL REPAID, NOT TO EXCEED 1 1/2% PER MONTH

CORRESPONDENCE ADDRESS : P.O. BOX 3108 • PORTLAND • OREGON • 97208 PHONE: (503) 285-7557

NWMAR128107

Zero

MAIL PAYMENT TO: P.O. BOX 4000-58 • PORTLAND • OREGON • 97208

NORTH WEST MARINE INC.

INVOICE

M/V "KNIN" and Owners
c/o Interocean Steamship Company
1100 Western Avenue, Suite 920
Seattle, Washington 98104

DATE	11/27/90
OUR JOB NO.	4298
CUSTOMER'S ORDER NO.	
CONTRACT NO.	
INVOICE NO.	1501.01
TERMS	Payment on Receipt of Invoice

CUSTOMER CODE NUMBER:

Duns No. 00-902-8580

M/V KNIN

Furnished labor, material and equipment to accomplish work in accordance with attached specifications.

Total Amount This Invoice $33,377.00

ENTERED NOV 30 1990

PAST DUE PAYMENTS SHALL BEAR INTEREST AT THE HIGHEST LAWFUL RATE UNTIL REPAID, NOT TO EXCEED 1 1/2% PER MONTH

CORRESPONDENCE ADDRESS : P.O. BOX 3108 • PORTLAND • OREGON • 97208 PHONE: (503) 285-7557

NWMAR128108

MAIL PAYMENT TO: P.O. BOX 4000-58 • PORTLAND • OREGON • 97208

NORTH WEST MARINE INC.

INVOICE

M/V "WESTERDAM" AND OWNERS
C/O HOLLAND AMERICA LINES
300 ELLIOTT AVENUE WEST
SEATTLE, WASHINGTON 98119

DATE 11/30/90
OUR JOB NO. N 4921
CUSTOMER'S ORDER NO.
CONTRACT NO.
INVOICE NO. 1517-08
TERMS

CUSTOMER CODE NUMBER:

Duns No. 00-902-8580

DEBIT MEMO
M/V WESTERDAM

Reverse Credit Memo # 147208. New Credit Memo to be issued with different application.

TOTAL AMOUNT THIS DEBIT 500,000.00

ENTERED DEC 0 1 1990

Douglas M. Temple
Asst. Controller

PAST DUE PAYMENTS SHALL BEAR INTEREST AT THE HIGHEST LAWFUL RATE UNTIL REPAID, NOT TO EXCEED 1 1/2% PER MONTH

CORRESPONDENCE ADDRESS : P.O. BOX 3108 • PORTLAND • OREGON • 97208 PHONE: (503) 285-7557

NWMAR128109

MAIL PAYMENT TO: P.O. BOX 4000-58 • PORTLAND • OREGON • 97208

NORTH WEST MARINE INC.

INVOICE

M/V "WESTERDAM" AND OWNERS
C/O HOLLAND AMERICA LINES
300 ELLIOTT AVENUE WEST
SEATTLE, WASHINGTON 98119

DATE 11/30/90
OUR JOB NO. N 4921
CUSTOMER'S ORDER NO.
CONTRACT NO.
INVOICE NO. 1518-09
TERMS

CUSTOMER CODE NUMBER:

Duns No. 00-902-8580

CREDIT MEMO

M/V WESTERDAM

Reissue Credit Memo . Orignal Credit Memo applied to 140301 should have been to 147107.

TOTAL AMOUNT THIS CREDIT: (500,000.00)

Apply To: #147107

Douglas M Temple
Asst. Controller

ENTERED DEC 0 1 1990

PAST DUE PAYMENTS SHALL BEAR INTEREST AT THE HIGHEST LAWFUL RATE UNTIL REPAID, NOT TO EXCEED 1 1/2% PER MONTH

CORRESPONDENCE ADDRESS : P.O. BOX 3108 • PORTLAND • OREGON • 97208 PHONE: (503) 285-7557

NWMAR128110

NORTHWEST MARINE IRON WORKS
INVOICES BY CALLEY

MONTH OF Oct 1990

	CUSTOMER	SHIP	INVOICE DATE	INVOICE NUMBER	INVOICE AMOUNT	INVOICE PAYMENT DATE	COMMISSION PERCENT	COMMISSION AMOUNT	COMMISSION DATE PAID	COMMISSION CHECK NUMBER
N4922	Holland America	Noordam	10/05/90	138204	40,765.52	12/17/90	10%	4,076.55	12/20/90	2150
N3110	Chantiers D'Atlantique		10/05/90	138345	1,750.00	11/23/90	10%	175.00	12/13/90	2149
N4288	General Steamship	Susan Sea	10/12/90	140701	11,769.00		10%	1,176.90		
N4287	Cascade Shipping	Anastasia	10/10/90	140201	2,264.00	11/07/90	10%	226.40	12/13/90	2149
N4921	Holland America	Westerdam	10/10/90	140301	500,000.00	10/19/90	Westerdam		12/13/90	2149
N4921	Holland America	Westerdam	10/26/90	143402	415.41	12/17/90	10%	41.54	12/20/90	2150
N4921			10/26/90	143502	109,148.51	11/30/90	Westerdam		12/13/90	2149
N4921			10/26/90	143604	98,316.00		Westerdam			
N4921			10/26/90	143703	45,914.00		Westerdam			
N4921			10/26/90	143806	192,243.00	12/07/90	Westerdam			
N4904	Holland America	Rotterdam	10/30/90	145602	440.00		10%	44.00		

Zero

MAIL PAYMENT TO: P.O. BOX 4000-58 • PORTLAND • OREGON • 97208

NORTH WEST MARINE INC.

INVOICE

M/V "NOORDAM" and Owners
c/o Holland America Line
300 Elliott Avenue
Seattle, WA 98119

DATE	10/5/90
OUR JOB NO.	4922
CUSTOMER'S ORDER NO.	
CONTRACT NO.	
INVOICE NO.	1382.04
TERMS	NET

CUSTOMER CODE NUMBER:

Duns No. 00-902-8580

M/V NOORDAM

Furnished labor, material and equipment to accomplish work in accordance with the attached specifications.

Total Amount Due This Invoice $40,765.52

ENTERED OCT 11 1990

PAST DUE PAYMENTS SHALL BEAR INTEREST AT THE HIGHEST LAWFUL RATE UNTIL REPAID, NOT TO EXCEED 1 1/2% PER MONTH

CORRESPONDENCE ADDRESS : P.O. BOX 3108 • PORTLAND • OREGON • 97208 PHONE: (503) 285-7557

NWMAR128112

Ferro

MAIL PAYMENT TO: P.O. BOX 4000-58 • PORTLAND • OREGON • 97208

NORTH WEST MARINE INC.

INVOICE

Chantiers De L'Atlantique
Alshom Atlantique
B.P. 400-44608
St. Nazaire, Cedex
France

DATE	10/5/90
OUR JOB NO.	3110
CUSTOMER'S ORDER NO.	
CONTRACT NO.	
INVOICE NO.	
TERMS	1383.45 NET

CUSTOMER CODE NUMBER:

Duns No. 00-902-8580

Warehouse charges for the main engine generator step-up gears, Ex-NOORDAM and NIEUW AMSTERDAM.

Charges for the month of October, 1990

Total Amount Due This Invoice $1,750.00

ENTERED OCT 11 1990

PAST DUE PAYMENTS SHALL BEAR INTEREST AT THE HIGHEST LAWFUL RATE UNTIL REPAID, NOT TO EXCEED 1 1/2% PER MONTH

CORRESPONDENCE ADDRESS : P.O. BOX 3108 • PORTLAND • OREGON • 97208 PHONE: (503) 285-7557

NWMAR128113

Zero

MAIL PAYMENT TO: P.O. BOX 4000-58 • PORTLAND • OREGON • 97208

NORTH WEST MARINE INC.

INVOICE

M/V "SUSAN SEA" and Owners
c/o General Steamship Company, Ltd.
421 S.W. 6th Suite 406
Portland, Oregon 97204

DATE	10/12/90
OUR JOB NO.	4288
CUSTOMER'S ORDER NO.	
CONTRACT NO.	
INVOICE NO.	1407.01
TERMS	NET Before vessel sails

CUSTOMER CODE NUMBER:

Duns No. 00-902-6580

S/S "SUSAN SEA"

Furnished labor, material and equipment to accomplish repairs in accordance with the attached specification.

Total Amount Due $11,769.00

PAST DUE PAYMENTS SHALL BEAR INTEREST AT THE HIGHEST LAWFUL RATE UNTIL REPAID, NOT TO EXCEED 1 1/2% PER MONTH

CORRESPONDENCE ADDRESS : P.O. BOX 3108 • PORTLAND • OREGON • 97208 PHONE: (503) 285-7557

Xerox

MAIL PAYMENT TO: P.O. BOX 4000-58 • PORTLAND • OREGON • 97208

NORTH WEST MARINE INC.

INVOICE

M/V "ANASTASIA" and Owners
c/o Cascade Shipping Company
10 N.W. 10th Avenue, Suite 500
Portland, Oregon 97209

DATE	10/10/90
OUR JOB NO.	4287
CUSTOMER'S ORDER NO.	
CONTRACT NO.	
INVOICE NO.	1402.01
TERMS	NET

CUSTOMER CODE NUMBER:

Duns No. 00-902-6580

Furnished labor, material and equipment in accordance with the attached specification.

Total Amount Due This Invoice $2,264.00

ENTERED OCT 11 1990

PAST DUE PAYMENTS SHALL BEAR INTEREST AT THE HIGHEST LAWFUL RATE UNTIL REPAID, NOT TO EXCEED 1 1/2% PER MONTH

CORRESPONDENCE ADDRESS : P.O. BOX 3108 • PORTLAND • OREGON • 97208 PHONE: (503) 285-7557

fer

MAIL PAYMENT TO: P.O. BOX 4000-58 • PORTLAND • OREGON • 97208

NORTH WEST MARINE INC.

INVOICE

M/V "WESTERDAM" and Owners
c/o Holland America Line
300 Elliott Avenue West
Seattle, WA 98119

DATE	10/10/90
OUR JOB NO.	4921
CUSTOMER'S ORDER NO.	
CONTRACT NO.	
INVOICE NO.	1403.01
TERMS	NET

CUSTOMER CODE NUMBER:

Duns No. 00-902-8580

M/V "WESTERDAM"

PROGRESS BILLING NO 1

Progress billing for work accomplished on the vessel in accordance with the specifications.

Total Amount This Invoice $500,000.00

ENTERED OCT 11 1990

PAST DUE PAYMENTS SHALL BEAR INTEREST AT THE HIGHEST LAWFUL RATE UNTIL REPAID, NOT TO EXCEED 1 1 2% PER MONTH

CORRESPONDENCE ADDRESS : P.O. BOX 3108 • PORTLAND • OREGON • 97208 PHONE: (503) 285-7557

NWMAR128116

MAIL PAYMENT TO: P.O. BOX 4000-58 • PORTLAND • OREGON • 97208

NORTH WEST MARINE INC.

Jerco

INVOICE

M/V "WESTERDAM" and Owners
c/o Holland America Lines
300 Elliott Avenue West
Seattle, WA 98119

DATE	10/26/90
OUR JOB NO.	4921
CUSTOMER'S ORDER NO.	
CONTRACT NO.	
INVOICE NO.	1434.02
TERMS	NET

CUSTOMER CODE NUMBER:

Duns No. 00-902-8580

M/V WESTERDAM

Furnished labor, material and equipment to
prepare and ship to vessel on October 10, 1990
one (1) display case and refrigerant parts
to Eller & Company, Ft. Lauderdale, Florida

Total Amount Due $ 415.41

ENTERED NOV 0 1 1990

PAST DUE PAYMENTS SHALL BEAR INTEREST AT THE HIGHEST LAWFUL RATE UNTIL REPAID, NOT TO EXCEED 1 1/2% PER MONTH

CORRESPONDENCE ADDRESS : P.O. BOX 3108 • PORTLAND • OREGON • 97208 PHONE: (503) 285-7557

NWMAR128117

MAIL PAYMENT TO: P.O. BOX 4000-58 • PORTLAND • OREGON • 97208

NORTH WEST MARINE INC.

INVOICE

M/V "WESTERDAM" and Owners
c/o Holland America Lines
300 Elliott Avenue West
Seattle, WA 98119

DATE	10/26/90
OUR JOB NO.	4921
CUSTOMER'S ORDER NO.	
CONTRACT NO.	
INVOICE NO.	1435.03
TERMS	NET

CUSTOMER CODE NUMBER:

Duns No. 00-902-8580

M/V WESTERDAM

For furnishing Port of Portland PSRY services, tugboat and pilotage (items 0013, 0019, and 0031) in accordance with attached invoices.

Total Agreed Price $109,148.51

ENTERED NOV 0 1 1990

PAST DUE PAYMENTS SHALL BEAR INTEREST AT THE HIGHEST LAWFUL RATE UNTIL REPAID, NOT TO EXCEED 1 1/2% PER MONTH

CORRESPONDENCE ADDRESS : P.O. BOX 3108 • PORTLAND • OREGON • 97208 PHONE: (503) 285-7557

NWMAR128118

MAIL PAYMENT TO: P.O. BOX 4000-58 • PORTLAND • OREGON • 97208

NORTH WEST MARINE INC.

INVOICE

M/V "WESTERDAM" and Owners
c/o Holland America Lines
300 Elliott Avenue West
Seattle, WA 98119

DATE	10/26/90
OUR JOB NO.	4921
CUSTOMER'S ORDER NO.	
CONTRACT NO.	
INVOICE NO.	1436.04
TERMS	NET

CUSTOMER CODE NUMBER:

Duns No. 00-902-8580

M/V WESTERDAM

For furnishing common charges while at
berth and on drydock per attached breakdown.

Total Agreed Price $ 98,316.00

ENTERED NOV 0 1 1990

PAST DUE PAYMENTS SHALL BEAR INTEREST AT THE HIGHEST LAWFUL RATE UNTIL REPAID, NOT TO EXCEED 1 1/2% PER MONTH

CORRESPONDENCE ADDRESS : P.O. BOX 3108 • PORTLAND • OREGON • 97208 PHONE: (503) 285-7557

NWMAR128119

MAIL PAYMENT TO: P.O. BOX 4000-58 • PORTLAND • OREGON • 97208

NORTH WEST MARINE INC.

INVOICE

M/V "WESTERDAM" and Owners
c/o Holland America Lines
300 Elliott Avenue West
Seattle, WA 98119

DATE	10/26/90
OUR JOB NO.	4921
CUSTOMER'S ORDER NO.	
CONTRACT NO.	
INVOICE NO.	1437.05
TERMS	NET

CUSTOMER CODE NUMBER:

Duns No. 00-902-6580

M/V WESTERDAM

Furnished labor, material, and equipment to accomplish repairs in way of damages to the Bow Thrusters (item no. 0078) in accordance with field survey dated 26 September 1990 and attached breakdown.

Total Agreed Price $ 45,914.00

ENTERED NOV 0 1 1990

PAST DUE PAYMENTS SHALL BEAR INTEREST AT THE HIGHEST LAWFUL RATE UNTIL REPAID, NOT TO EXCEED 1 1/2% PER MONTH

CORRESPONDENCE ADDRESS : P.O. BOX 3108 • PORTLAND • OREGON • 97208 PHONE: (503) 285-7557

MAIL PAYMENT TO: P.O. BOX 4000-58 • PORTLAND • OREGON • 97208

NORTH WEST MARINE INC.

INVOICE

M/V "WESTERDAM" and Owners
c/o Holland America Lines
300 Elliott Avenue West
Seattle, WA 98119

DATE	10/26/90
OUR JOB NO.	4921
CUSTOMER'S ORDER NO.	
CONTRACT NO.	
INVOICE NO.	1438.06
TERMS	NET

CUSTOMER CODE NUMBER:

Duns No. 00-902-8580

M/V WESTERDAM

Furnished labor, material, and equipment to accomplish repairs in way of damages in accordance with survey report dated 26 September 1990 (Item Numbers 0035, 0035A, 0035C, 0035D, 0062A, 0062B, 0062C, 0076, 0077, 0081, and 0082)

Total Amount	$181,876.00
PSRY U/R Fees	10,367.00
Total Agreed Price	$192,243.00

ENTERED NOV 0 1 1990

PAST DUE PAYMENTS SHALL BEAR INTEREST AT THE HIGHEST LAWFUL RATE UNTIL REPAID, NOT TO EXCEED 1 1/2% PER MONTH

CORRESPONDENCE ADDRESS : P.O. BOX 3108 • PORTLAND • OREGON • 97208 PHONE: (503) 285-7557

MAIL PAYMENT TO: P.O. BOX 4000-58 • PORTLAND • OREGON • 97208

NORTH WEST MARINE INC.

INVOICE

S/S "ROTTERDAM" and Owners
c/o Holland America Lines
300 Elliott Avenue West
Seattle, Washington 98119

DATE	10/30/90
OUR JOB NO.	4904
CUSTOMER'S ORDER NO.	
CONTRACT NO.	
INVOICE NO.	1456.02
TERMS	NET

CUSTOMER CODE NUMBER:

Duns No. 00-902-8580

S/S ROTTERDAM

Furnish labor, material and equipment to
deliver to vessel at Terminal 2 on October 13, 1990
to the attention of the Hotel Manager

Ninety-six (96) cartons printed material
One (1) popcorn popper
Two (2) 50# bags popcorn
Two (2) cartons popcorn bags

TOTAL AMOUNT DUE $ 440.00

ENTERED NOV 0 1 1990.

PAST DUE PAYMENTS SHALL BEAR INTEREST AT THE HIGHEST LAWFUL RATE UNTIL REPAID, NOT TO EXCEED 1 1/2% PER MONTH

CORRESPONDENCE ADDRESS : P.O. BOX 3108 • PORTLAND • OREGON • 97208 PHONE: (503) 285-7557

NWMAR128122

NORTHWEST MARINE IRON WORKS
INVOICES BY CALLEY

MONTH OF Sept 1990

CUSTOMER	SHIP	INVOICE DATE	INVOICE NUMBER	INVOICE AMOUNT	INVOICE PAYMENT DATE	COMMISSION PERCENT	COMMISSION AMOUNT	COMMISSION DATE PAID	COMMISSION CHECK NUMBER
Chantiers D'Atlantique		9/5/90	131444	1,750.00	10/22/90	10%	175.00	10/26/90	2146
Internat'l Marine	Wani Lake	9/5/90	131501	3,184.00	10/01/90	10%	318.40	10/26/90	2146
Barber Wilhelmsen	Golden Hawk	9/12/90	133702	<1,624.84>	9/5/90	10%	<162.48>	9/21/90	2145
Holland America	~~Rotterdam~~	9/12/90	133901	<90,287.32>	X				
Holland America	Noordam	9/11/90	133501	6,025.00		10%	602.50		
Mobil Oil	Mobil Meridian	9/13/90	134101	57,624.00	10/22/90	10%	5762.40	10/26/90	2146
Central Gulf Lines	Green Lake	9/17/90	135301	6,200.00	10/01/90	10%	620.00	10/26/90	2146
Internat'l Shipping	Star Livorno	9/18/90	135402	<2,395.00>		Transfer in A/R			
Internat'l Shipping	World Aretus	9/18/90	135501	2,395.00		to Correct Job #			
Holland America	Noordam	9/28/90	137403	683.00		~~10%~~	~~68.30~~	See 12/90 Credit Memo	
Holland America	Noordam	9/26/90	1364.02	2453.00		10%	245.30		

NWMAR128123

Susan Dero

MAIL PAYMENT TO: P.O. BOX 4000-58 • PORTLAND • OREGON • 97208

NORTH WEST MARINE INC.

INVOICE

Chantiers de L'Atlantique
Alshom-Atlantique
B.P. 400-44608
St. Nazaire, Cedex
FRANCE

DATE	9/5/90
OUR JOB NO.	3110
CUSTOMER'S ORDER NO.	
CONTRACT NO.	
INVOICE NO.	1314.44
TERMS	Net

CUSTOMER CODE NUMBER:

Duns No. 00-902-8580

Warehouse charges for the main engine generator step-up gears, Ex-NOORDAM and NIEUW AMSTERDAM

Charges for the month of September, 1990

Total Amount Due This Invoice $1,750.00

ENTERED SEP 17 1990

PAST DUE PAYMENTS SHALL BEAR INTEREST AT THE HIGHEST LAWFUL RATE UNTIL REPAID, NOT TO EXCEED 1 1/2% PER MONTH

CORRESPONDENCE ADDRESS : P.O. BOX 3108 • PORTLAND • OREGON • 97208 PHONE: (503) 285-7557

NWMAR128124

Susan Sells

MAIL PAYMENT TO: P.O. BOX 4000-58 • PORTLAND • OREGON • 97208

NORTH WEST MARINE INC.

INVOICE

M/V "WANI LAKE and Owners
c/o International Marine Transport Line
1999 Harrison, Suite 930
Oakland, CA 94612

DATE	9/5/90
OUR JOB NO.	4280
CUSTOMER'S ORDER NO.	
CONTRACT NO.	
INVOICE NO.	1315.01
TERMS	Net

CUSTOMER CODE NUMBER:

Duns No. 00-902-8580

M/V "WANI LAKE"

Furnished labor, material and equipment
to accomplish repairs in accordance with
the attached specifications.

Total Amount Due This Invoice $3,184.00

ENTERED SEP 07 1990

PAST DUE PAYMENTS SHALL BEAR INTEREST AT THE HIGHEST LAWFUL RATE UNTIL REPAID, NOT TO EXCEED 1 1/2% PER MONTH

CORRESPONDENCE ADDRESS : P.O. BOX 3108 • PORTLAND • OREGON • 97208 PHONE: (503) 285-7557

NWMAR128125

Demo

MAIL PAYMENT TO: P.O. BOX 4000-58 • PORTLAND • OREGON • 97208

NORTH WEST MARINE INC.

INVOICE

M/V "GOLDEN HAWK" and Owners
c/o Barber Wilhelmen Agencies (Barwill)
1750 N.W. Front Avenue, Suite 104
Portland, Oregon 97209

DATE	9/12/90
OUR JOB NO.	4274 -
CUSTOMER'S ORDER NO.	
CONTRACT NO.	
INVOICE NO.	1337.02
TERMS	Net

CUSTOMER CODE NUMBER:

Duns No. 00-902-8580

M/V "GOLDEN HAWK"

Negotiated credit Apply to: invoice# 128001

Total Credit Due $(1,624.84)

PAST DUE PAYMENTS SHALL BEAR INTEREST AT THE HIGHEST LAWFUL RATE UNTIL REPAID, NOT TO EXCEED 1 1/2% PER MONTH

CORRESPONDENCE ADDRESS : P.O. BOX 3108 • PORTLAND • OREGON • 97208 PHONE: (503) 285-7557

NWMAR128126

MAIL PAYMENT TO: P.O. BOX 4000-58 • PORTLAND • OREGON • 97208

NORTH WEST MARINE INC

INVOICE

Holland America Line
300 Elliot Ave.
Seattle, Washington

DATE	12 September 1990
OUR JOB NO.	N4904
CUSTOMER'S ORDER NO.	
CONTRACT NO.	
INVOICE NO.	1339-01
TERMS	

CUSTOMER CODE NUMBER:

Duns No. 00-902-5580

CREDIT MEMO
(Internal Only)

Refund of overcharged U&R. Original payment to Holland America was charged to Cost of Sales.

apply to 133901

Total Amount This Credit: $90,287.32

Douglas M. Temple
Asst. Controller

PAST DUE PAYMENTS SHALL BEAR INTEREST AT THE HIGHEST LAWFUL RATE UNTIL REPAID, NOT TO EXCEED 1 1/2% PER MONTH

CORRESPONDENCE ADDRESS : P.O. BOX 3108 • PORTLAND • OREGON • 97208 PHONE: (503) 285-7557

Zero

MAIL PAYMENT TO: P.O. BOX 4000-58 • PORTLAND • OREGON • 97208

NORTH WEST MARINE INC.

INVOICE

M/S "NOORDAM" and Owners
c/o Holland America Line
300 Elliott Avenue West
Seattle, WA 98119

DATE	9/11/90
OUR JOB NO.	4922-
CUSTOMER'S ORDER NO.	
CONTRACT NO.	
INVOICE NO.	1335.01
TERMS	Net

CUSTOMER CODE NUMBER:

Duns No. 00-902-8580

M/S "NOORDAM"

Furnished labor and material to accomplish attached specifications.

Total Amount Due This Invoice $6,025.00

PAST DUE PAYMENTS SHALL BEAR INTEREST AT THE HIGHEST LAWFUL RATE UNTIL REPAID, NOT TO EXCEED 1 1/2% PER MONTH

CORRESPONDENCE ADDRESS : P.O. BOX 3108 • PORTLAND • OREGON • 97208 PHONE: (503) 285-7557

NWMAR128128

Xerox

MAIL PAYMENT TO: P.O. BOX 4000-58 • PORTLAND • OREGON • 97208

NORTH WEST MARINE INC.

INVOICE

S/S "MOBIL MERIDIAN" and Owners
c/o Mobil Oil Corporation
3225 Gallows Road
Fairfax, VA 22037-0001

DATE	9/13/90
OUR JOB NO.	4279 -
CUSTOMER'S ORDER NO.	
CONTRACT NO.	
INVOICE NO.	1341.01
TERMS	Net

CUSTOMER CODE NUMBER:

Duns No. 00-902-8580

S/S "MOBIL MERIDIAN"

Furnished labor, equipment and material to accomplish work in accordance with the attached specifications.

Total Amount Due This Invoice $57,624.00

Please make wire transfer of funds to:

Southwest Marine, Inc.
c/o Northwest Marine, Inc.
First Interstate Bank of Oregon
N.W. 9th and Yeon Branch
P.O. Box 10172
Portland, Oregon 97210

ENTERED SEP 1 9 1990

Account No. 552-001522-9
ABA #123-000123

PAST DUE PAYMENTS SHALL BEAR INTEREST AT THE HIGHEST LAWFUL RATE UNTIL REPAID, NOT TO EXCEED 1 1/2% PER MONTH

CORRESPONDENCE ADDRESS : P.O. BOX 3108 • PORTLAND • OREGON • 97208 PHONE: (503) 285-7557

NWMAR128129

Kuo

MAIL PAYMENT TO: P.O. BOX 4000-58 • PORTLAND • OREGON • 97208

NORTH WEST MARINE INC.

INVOICE

M/V "GREEN LAKE" and Owners
c/o Central Gulf Lines, Inc.
Suite 1700, Poydras Center
650 Poydras Street
New Orleans, LA. 70130

DATE	9/17/90
OUR JOB NO.	4282
CUSTOMER'S ORDER NO.	79092
CONTRACT NO.	
INVOICE NO.	1353.01
TERMS	Net

CUSTOMER CODE NUMBER:

Duns No. 00-902-8580

M/V "GREEN LAKE"

Furnished labor, material and equipment to accomplish work in accordance with the specifications.

Total Amount Due This Invoice $ 6,200.00

ENTERED SEP 18 1990

PAST DUE PAYMENTS SHALL BEAR INTEREST AT THE HIGHEST LAWFUL RATE UNTIL REPAID, NOT TO EXCEED 1 1/2% PER MONTH

CORRESPONDENCE ADDRESS : P.O. BOX 3108 • PORTLAND • OREGON • 97208 PHONE: (503) 285-7557

NWMAR128130

MAIL PAYMENT TO: P.O. BOX 4000-58 • PORTLAND • OREGON • 97208

NORTH WEST MARINE INC.

INVOICE

M/V WORLD ARETUS AND OWNER
C/O INTERNATIONAL SHIPPING CO.
421 S.W. 6TH AVE
PORTLAND, ORE 97204

DATE	18 September 1990
OUR JOB NO.	N4278
CUSTOMER'S ORDER NO.	
CONTRACT NO.	
INVOICE NO.	135402
TERMS	

CUSTOMER CODE NUMBER:

Duns No. 00-902-8580

CREDIT MEMO

(Internal Only)

FURNISHED LABOR,MATERIAL AND EQUIPMENT TO
ACCOMPLISHED REPAIRS IN ACCORDANCE WITH THE
ATTACHED SPECIFICATIONS.
REFER TO INVOICE # 129401 ORIGINAL INVOICE CHARGE TO JOB 4278

Total Amount This Debit: ($2,395.00)

Applied To: 129401

ENTERED SEP 18 1990

Douglas M. Temple
Asst. Controller

PAST DUE PAYMENTS SHALL BEAR INTEREST AT THE HIGHEST LAWFUL RATE UNTIL REPAID, NOT TO EXCEED 1 1/2% PER MONTH

CORRESPONDENCE ADDRESS : P.O. BOX 3108 • PORTLAND • OREGON • 97208 PHONE: (503) 285-7557

MAIL PAYMENT TO: P.O. BOX 4000-58 • PORTLAND • OREGON • 97208

NORTH WEST MARINE INC.

INVOICE

M/V WORLD ARETUS AND OWNER
C/O INTERNATIONAL SHIPPING CO.
421 S.W. 6TH AVE
PORTLAND, ORE 97204

DATE 18 September 1990
OUR JOB NO. N4275
CUSTOMER'S ORDER NO.
CONTRACT NO.
INVOICE NO. 135501
TERMS

CUSTOMER CODE NUMBER:

Duns No. 00-902-8580

DEBIT MEMO

(Internal Only)

FURNISHED LABOR,MATERIAL AND EQUIPMENT TO
ACCOMPLISHED REPAIRS IN ACCORDANCE WITH THE
ATTACHED SPECIFICATIONS.
REFER TO INVOICE # 129401 ORIGINAL INVOICE CHARGE TO JOB 4278

Total Amount This Debit: $2,395.00

ENTERED SEP 18 1990

Douglas M. Temple
Asst. Controller

PAST DUE PAYMENTS SHALL BEAR INTEREST AT THE HIGHEST LAWFUL RATE UNTIL REPAID, NOT TO EXCEED 1 1/2% PER MONTH

CORRESPONDENCE ADDRESS : P.O. BOX 3108 • PORTLAND • OREGON • 97208 PHONE: (503) 285-7557

Zero

MAIL PAYMENT TO: P.O. BOX 4000-58 • PORTLAND • OREGON • 97208

NORTH WEST MARINE INC.

INVOICE

M/S "NOORDAM" and Owners
c/o Holland America Line
300 Elliott Avenue West
Seattle, Washington 98119

DATE	9/28/90
OUR JOB NO.	4922
CUSTOMER'S ORDER NO.	
CONTRACT NO.	
INVOICE NO.	1374.03
TERMS	Net

CUSTOMER CODE NUMBER:

Duns No. 00-902-8580

M/S "NOORDAM"

Furnish labor, material and equipment to accomplish betterments in accordance with the attached specification.

Total Amount Due This Invoice $683.00

ENTERED OCT 01 1990

PAST DUE PAYMENTS SHALL BEAR INTEREST AT THE HIGHEST LAWFUL RATE UNTIL REPAID, NOT TO EXCEED 1 1/2% PER MONTH

CORRESPONDENCE ADDRESS : P.O. BOX 3108 • PORTLAND • OREGON • 97208 PHONE: (503) 285-7557

NWMAR128133

Zero

MAIL PAYMENT TO: P.O. BOX 4000-58 • PORTLAND • OREGON • 97208

NORTH WEST MARINE INC.

INVOICE

M/S "NOORDAM" and Owners
c/o Holland America Line
300 Elliott Avenue West
Seattle, Washington 98119

DATE	9/26/90
OUR JOB NO.	4922
CUSTOMER'S ORDER NO.	
CONTRACT NO.	
INVOICE NO.	1364.02
TERMS	Net

CUSTOMER CODE NUMBER:

Duns No. 00-902-8580

M/S "NOORDAM"

Furnish labor, material and equipment to accomplish betterments in accordance with the attached specification.

Total Amount Due This Invoice $2,453.00

ENTERED SEP 27 1990

PAST DUE PAYMENTS SHALL BEAR INTEREST AT THE HIGHEST LAWFUL RATE UNTIL REPAID, NOT TO EXCEED 1 1/2% PER MONTH

CORRESPONDENCE ADDRESS : P.O. BOX 3108 • PORTLAND • OREGON • 97208 PHONE: (503) 285-7557

NWMAR128134

NORTHWEST MARINE IRON WORKS
INVOICES BY CALLEY

MONTH OF Aug 1990

	CUSTOMER	SHIP	INVOICE DATE	INVOICE NUMBER	INVOICE AMOUNT	INVOICE PAYMENT DATE	COMMISSION PERCENT	COMMISSION AMOUNT	COMMISSION DATE PAID	COMMISSION CHECK NUMBER
4267	EAC Transport	Moka Phahu	8/02/90	125501	38,535.00	Ø				
			8/07/90	125502	(38,535.00)					
				126203	33,802.00	9/4/90	10%	3,380.20	9/21/90	2145
				126304	2,483.00	9/4/90	10%	248.30	9/21/90	2145
	Barber Wilhelmsen	Golden Hawk	8/14/90	128001	40,621.00	9/5/90	10%	4,062.10	9/21/90	2145
	Chantiers D'Atlantique		8/20/90	128543	1,750.00	10/15/90	10%	175.00	10/26/90	2146
	Holland America	Rotterdam	8/21/90	128920	679.00	9/21/90	10%	67.90	10/26/90	2146
	Intl Shipping	World Aretus	8/24/90	129401	2,395.00	10/08/90	10%	239.50	10/26/90	2146
	Star Shipping	Star Invorno	8/31/90	131301	1,787.00	9/17/90	10%	178.70	9/21/90	2145

Susan Jones

MAIL PAYMENT TO: P.O. BOX 4000-58 • PORTLAND • OREGON • 97208

NORTH WEST MARINE INC.

INVOICE

M/V "MOKU PAHU" and Owners
c/o EAC Transport
317 S.W. Alder St. Suite 950
Portland, Oregon 97204

DATE	8/2/90
OUR JOB NO.	4267
CUSTOMER'S ORDER NO.	
CONTRACT NO.	
INVOICE NO.	1255.01
TERMS	Net

CUSTOMER CODE NUMBER:

Duns No. 00-902-8580

M/V "MOKU PAHU"

Furnished labor, material and equipment to accomplish repairs in accordance with the attached specifications.

Total Amount Due This Invoice $38,535.00

ENTERED AUG 03 1990

PAST DUE PAYMENTS SHALL BEAR INTEREST AT THE HIGHEST LAWFUL RATE UNTIL REPAID, NOT TO EXCEED 1 1/2% PER MONTH

CORRESPONDENCE ADDRESS : P.O. BOX 3108 • PORTLAND • OREGON • 97208 PHONE: (503) 285-7557

MAIL PAYMENT TO: P.O. BOX 4000-58 • PORTLAND • OREGON • 97208

NORTH WEST MARINE INC.

INVOICE

M/V "MOKU PAHU" and Owners
c/o EAC Transport
317 S.W. Alder St., Suite 950
Portland, Oregon 97204

DATE	8/7/90
OUR JOB NO.	4267
CUSTOMER'S ORDER NO.	
CONTRACT NO.	
INVOICE NO.	1261.02
TERMS	CM

CUSTOMER CODE NUMBER:

Duns No. 00-902-8580

M/V "MOKU PAHU"

To cancel invoice 1255.01 per directions of
Mr. Nicholas Calley

Total Credit Due This Invoice $(38,535.00)

PAST DUE PAYMENTS SHALL BEAR INTEREST AT THE HIGHEST LAWFUL RATE UNTIL REPAID, NOT TO EXCEED 1 1/2% PER MONTH

CORRESPONDENCE ADDRESS : P.O. BOX 3108 • PORTLAND • OREGON • 97208 PHONE: (503) 285-7557

MAIL PAYMENT TO: P.O. BOX 4000-58 • PORTLAND • OREGON • 97208

NORTH WEST MARINE INC.

INVOICE

M/V "MOKU PAHU" and Owners
c/o EAC Transport
317 S.W. Alder St., Suite 950
Portland, Oregon 97204

DATE	8/7/90
OUR JOB NO.	4267
CUSTOMER'S ORDER NO.	
CONTRACT NO.	
INVOICE NO.	1262.03
TERMS	Net

CUSTOMER CODE NUMBER:

Duns No. 00-902-8580

M/V "MOKU PAHU"

Furnished labor, materials and equipment to accomplish repairs in accordance with attached specifications

Total Amount Due This Invoice $33,802.00

PAST DUE PAYMENTS SHALL BEAR INTEREST AT THE HIGHEST LAWFUL RATE UNTIL REPAID, NOT TO EXCEED 1 1/2% PER MONTH

CORRESPONDENCE ADDRESS : P.O. BOX 3108 • PORTLAND • OREGON • 97208 PHONE: (503) 285-7557

Fuson & no

MAIL PAYMENT TO: P.O. BOX 4000-58 • PORTLAND • OREGON • 97208

NORTH WEST MARINE INC.

INVOICE

M/V "MOKU PAHU" and Owners
c/o EAC Transport
317 S.W. Alder St., Suite 950
Portland, Oregon 97204

DATE	8/7/90
OUR JOB NO.	4267
CUSTOMER'S ORDER NO.	
CONTRACT NO.	
INVOICE NO.	1263.04
TERMS	Net

CUSTOMER CODE NUMBER:

Duns No. 00-902-8580

M/V "MOKU PAHU"

Furnished labor, materials and equipment to accomplish repairs in accordance with attached specifications

Total Amount Due This Invoice $ 2,483.00

PAST DUE PAYMENTS SHALL BEAR INTEREST AT THE HIGHEST LAWFUL RATE UNTIL REPAID, NOT TO EXCEED 1 1/2% PER MONTH

CORRESPONDENCE ADDRESS : P.O. BOX 3108 • PORTLAND • OREGON • 97208 PHONE: (503) 285-7557

NWMAR128139

Jeno

MAIL PAYMENT TO: P.O. BOX 4000-58 • PORTLAND • OREGON • 97208

NORTH WEST MARINE INC.

INVOICE

M/V "GOLDEN HAWK" and Owners
c/o Barber Wilhelmsen Agencies (Barwill)
1750 N.W. Front Avenue, Suite 104
Portland, Oregon 97209

DATE	8/14/90
OUR JOB NO.	4274
CUSTOMER'S ORDER NO.	
CONTRACT NO.	
INVOICE NO.	1280.01
TERMS	Net

CUSTOMER CODE NUMBER:

Duns No. 00-902-8580

M/V "GOLDEN HAWK"

Furnished labor, materials and equipment to accomplish repairs in accordance with the attached specifications.

Total Amount Due This Invoice $40,621.00

ENTERED AUG 26 1990

PAST DUE PAYMENTS SHALL BEAR INTEREST AT THE HIGHEST LAWFUL RATE UNTIL REPAID. NOT TO EXCEED 1 1/2% PER MONTH

CORRESPONDENCE ADDRESS : P.O. BOX 3108 • PORTLAND • OREGON • 97208 PHONE: (503) 285-7557

NWMAR128140

Susan Jerio

MAIL PAYMENT TO: P.O. BOX 4000-58 • PORTLAND • OREGON • 97208

NORTH WEST MARINE INC.

INVOICE

Chantiers De L'Atlantique
Alshom-Atlantique
B.P. 400-44608
St. Nazaire, Cedex
FRANCE

DATE	8/20/90
OUR JOB NO.	3110
CUSTOMER'S ORDER NO.	
CONTRACT NO.	
INVOICE NO.	1285-43
TERMS	Net

CUSTOMER CODE NUMBER:

Duns No. 00-902-8580

Warehouse charges for the main engine generator step-up gears, Ex-NOORDAM and NIEUW AMSTERDAM.

Charges for the month of August, 1990

Total Amount Due This Invoice $1,750.00

ENTERED AUG 23 1990

PAST DUE PAYMENTS SHALL BEAR INTEREST AT THE HIGHEST LAWFUL RATE UNTIL REPAID, NOT TO EXCEED 1 1/2% PER MONTH

CORRESPONDENCE ADDRESS : P.O. BOX 3108 • PORTLAND • OREGON • 97208 PHONE: (503) 285-7557

NWMAR128141

Susan Jerro

MAIL PAYMENT TO: P.O. BOX 4000-58 • PORTLAND • OREGON • 97208

NORTH WEST MARINE INC.

INVOICE

S.S. ROTTERDAM and Owners
c/o Holland America Lines
300 Elliott Avenue West
Seattle, WA 98119

DATE	8/21/90
OUR JOB NO.	4904
CUSTOMER'S ORDER NO.	
CONTRACT NO.	
INVOICE NO.	1289.01 20
TERMS	Net

CUSTOMER CODE NUMBER:

Duns No. 00-902-8580

S.S. ROTTERDAM

Furnished labor, material and equipment including
custom broker services and bonded truck to deliver
one (1) undercounter refrigerator to
S/S "ROTTERDAM" in care of Van Ingen Services, Ltd.
Vancouver, B.C., Canada

Total Amount Due This Invoice $679.00

ENTERED AUG 23 1990

PAST DUE PAYMENTS SHALL BEAR INTEREST AT THE HIGHEST LAWFUL RATE UNTIL REPAID, NOT TO EXCEED 1 1/2% PER MONTH

CORRESPONDENCE ADDRESS : P.O. BOX 3108 • PORTLAND • OREGON • 97208 PHONE: (503) 285-7557

NWMAR128142

Susan Sero

MAIL PAYMENT TO: P.O. BOX 4000-58 • PORTLAND • OREGON • 97208

NORTH WEST MARINE INC.

INVOICE

M/V "WORLD ARETUS" and Owners
c/o International Shipping Company
421 S.W. 6th Avenue
Portland, Oregon 97204

DATE	8/24/90
OUR JOB NO.	4278
CUSTOMER'S ORDER NO.	
CONTRACT NO.	
INVOICE NO.	1294.01
TERMS	Net

CUSTOMER CODE NUMBER:

Duns No. 00-902-8580

M/V WORLD ARETUS

Furnished labor, material and equipment to accomplish repairs in accordance with the attached specifications.

Total Amount Due This Invoice $2,395.00

ENTERED AUG 28 1990

Need ~~3540~~
Credit Memo
World Atreus
4278 1/8
Applied 1294.01
2395.00
Debit Memo
~~3540~~
World Atreus
4275

PAST DUE PAYMENTS SHALL BEAR INTEREST AT THE HIGHEST LAWFUL RATE UNTIL REPAID, NOT TO EXCEED 1 1/2% PER MONTH

CORRESPONDENCE ADDRESS : P.O. BOX 3108 • PORTLAND • OREGON • 97208 PHONE: (503) 285-7557

NWMAR128143

MAIL PAYMENT TO: P.O. BOX 4000-58 • PORTLAND • OREGON • 97208

NORTH WEST MARINE INC.

INVOICE

M/V "STAR LIVORNO" and Owners
c/o Star Shipping Company
Oregon Pioneer Building, Suite 307
Portland, Oregon 97204

DATE	8/31/90
OUR JOB NO.	4278
CUSTOMER'S ORDER NO.	
CONTRACT NO.	
INVOICE NO.	1313.01
TERMS	Net

CUSTOMER CODE NUMBER:

Duns No. 00-902-8580

M/V "STAR LIVORNO"

Furnished labor, material and equipment to accomplish repairs in accordance with attached specifications.

Total amount due this invoice $1,787.00

Approved: ENTERED SEP 05 1990

PAST DUE PAYMENTS SHALL BEAR INTEREST AT THE HIGHEST LAWFUL RATE UNTIL REPAID, NOT TO EXCEED 1 1/2% PER MONTH

CORRESPONDENCE ADDRESS : P.O. BOX 3108 • PORTLAND • OREGON • 97208 PHONE: (503) 285-7557

NWMAR128144

NORTHWEST MARINE IRON WORKS
INVOICES BY CALLEY

MONTH OF July 1990

	CUSTOMER	SHIP	INVOICE DATE	INVOICE NUMBER	INVOICE AMOUNT	INVOICE PAYMENT DATE	COMMISSION PERCENT	COMMISSION AMOUNT	COMMISSION DATE PAID	COMMISSION CHECK NUMBER
4254	Cascade Shipping	Africa Fern	7/9/90	121701	1,239.00	8/13/90	10%	123.90	9/21/90	2145
4258	Transmarine	Oreo	7/9/90	121801	12,541.00	8/23/90	10%	1,254.10	9/21/90	2145
3110	Chantiers D'Atlantique		7/9/90	121942	1,750.00	10/04/90	10%	175.00	10/26/90	2146
4911	BSL	Bermuda Star	7/11/90	491102	(3,433,704.10)	X				
4253	Ant'l Shipping	Chashima	7/10/90	122101	13,278.00	8/16/90	10%	1,327.80	9/21/90	2145
4263	Norton Lilly	Wa Shan Hai	7/18/90	123801	11,487.00	11/15/90	10%	1,148.70	12/13/90	2149
4265	Transversa Shipping	Ocean Garuda	7/19/90	124301	3,580.00	9/18/90	10%	358.00	10/26/90	2146
4266	Pan Pacific Shipping	Sea Jade	7/31/90	125101	1,634.50	9/4/90	10%	163.45	9/21/90	2145

NWMAR128145

MAIL PAYMENT TO: P.O. BOX 4000-58 • PORTLAND • OREGON • 97208

NORTH WEST MARINE INC.

INVOICE

M/V "AFRICA FERN" and Owners
c/o Cascade Shipping Company
10 N.W. 10th Avenue, Suite 500
Portland, Oregon 97209

DATE 7/9/90
OUR JOB NO. 4254
CUSTOMER'S ORDER NO.
CONTRACT NO. 1217.01
INVOICE NO. Net
TERMS

CUSTOMER CODE NUMBER:

Duns No. 00-902-8580

M/V "AFRICA FERN"

Furnished labor, materials and equipment to accomplish repairs in accordance with the attached specification.

Total Amount Due This Invoice $1,239.00

ENTERED JUL 11 1990

PAST DUE PAYMENTS SHALL BEAR INTEREST AT THE HIGHEST LAWFUL RATE UNTIL REPAID, NOT TO EXCEED 1 1/2% PER MONTH

CORRESPONDENCE ADDRESS : P.O. BOX 3108 • PORTLAND • OREGON • 97208 PHONE: (503) 285-7557

MAIL PAYMENT TO: P.O. BOX 4000-58 • PORTLAND • OREGON • 97208

NORTH WEST MARINE INC.

INVOICE

M/V "OREO" and Owners
c/o Transmarine Navigation Company
600 N.W. Front Avenue, Suite 1
Portland, Oregon 97201

DATE 7/9/90
OUR JOB NO. 4258
CUSTOMER'S ORDER NO.
CONTRACT NO.
INVOICE NO. 1218.01
TERMS Net

CUSTOMER CODE NUMBER:

Duns No. 00-902-8580

M/V "OREO"

Furnished labor, materials and equipment to accomplish repairs in accordance with the attached specification.

Total Amount Due This Invoice $12,541.00

ENTERED JUL 11 1990

PAST DUE PAYMENTS SHALL BEAR INTEREST AT THE HIGHEST LAWFUL RATE UNTIL REPAID, NOT TO EXCEED 1 1/2% PER MONTH

CORRESPONDENCE ADDRESS : P.O. BOX 3108 • PORTLAND • OREGON • 97208 PHONE: (503) 285-7557

MAIL PAYMENT TO: P.O. BOX 4000-58 • PORTLAND • OREGON • 97208

NORTH WEST MARINE INC.

INVOICE

Chantiers De L'Atlantique
Alshom-Atlantique
B.P. 400-44608
St. Nazaire, Cedex
FRANCE

DATE
OUR JOB NO. 7/9/90
CUSTOMER'S ORDER NO. 3110
CONTRACT NO.
INVOICE NO. 1219.42
TERMS Net

CUSTOMER CODE NUMBER:

Duns No. 00-902-8580

Warehouse charges for the main engine generator step-up gears, Ex-NOORDAM and NIEUW AMSTERDAM.

Charges for the month of July, 1990

Total Amount Due This Invoice $1,750.00

ENTERED JUL 11 1990

PAST DUE PAYMENTS SHALL BEAR INTEREST AT THE HIGHEST LAWFUL RATE UNTIL REPAID, NOT TO EXCEED 1 1/2% PER MONTH

CORRESPONDENCE ADDRESS : P.O. BOX 3108 • PORTLAND • OREGON • 97208 PHONE: (503) 285-7557

MAIL PAYMENT TO: P.O. BOX 4000-58 • PORTLAND • OREGON • 97208

NORTH WEST MARINE INC.

INVOICE

S/S "BERMUDA STAR" and Owners
c/o Bermuda Star Line, Inc.
11086 Teaneck Road
Teaneck, NJ 07666

DATE 11 July 1990
OUR JOB NO. N4911
CUSTOMER'S ORDER NO.
CONTRACT NO.
INVOICE NO. 1225-01
TERMS

CUSTOMER CODE NUMBER:

Duns No. 00-902-8580

CREDIT MEMO
(Internal Only)

Credit to reclassify balance due from insurance to other receivables. The timing of collection on this account is uncertain, therefore the account will be transfered out of the current receivable balance. In addition, the amount in excess of a fully burdened break-even on the account will be written off immediately.

Apply to Invoice # 4911-02

Total Amount This Credit: $3,433,704.10

Distribute this credit as follows:

Comm'l Billings	1436-01	$864,377.00
Other Comm'l Receivables	1200-01	$2,569,327.10

Douglas M. Temple
Asst. Controller

ENTERED JUL 12 1990

PAST DUE PAYMENTS SHALL BEAR INTEREST AT THE HIGHEST LAWFUL RATE UNTIL REPAID, NOT TO EXCEED 1 1/2% PER MONTH

CORRESPONDENCE ADDRESS : P.O. BOX 3108 • PORTLAND • OREGON • 97208 PHONE: (503) 285-7557

Susan

MAIL PAYMENT TO: P.O. BOX 4000-58 • PORTLAND • OREGON • 97208

NORTH WEST MARINE INC.

INVOICE

M/V "CHASHIMA" and Owners
c/o International Shipping Company
421 S.W. 6th Avenue
Portland, Oregon 97204

DATE 7/10/90
OUR JOB NO. 4253
CUSTOMER'S ORDER NO.
CONTRACT NO. 1221.01
INVOICE NO. Net
TERMS

CUSTOMER CODE NUMBER:

Duns No. 00-902-8580

M/V "CHASHIMA"

Furnished labor, material and equipment to accomplish repairs in accordance with attached specification.

Total amount due this invoice $13,278.00

ENTERED JUL 12 1990

PAST DUE PAYMENTS SHALL BEAR INTEREST AT THE HIGHEST LAWFUL RATE UNTIL REPAID, NOT TO EXCEED 1 1/2% PER MONTH

CORRESPONDENCE ADDRESS : P.O. BOX 3108 • PORTLAND • OREGON • 97208 PHONE: (503) 285-7557

NWMAR128150

Susan Ferro

MAIL PAYMENT TO: P.O. BOX 4000-58 • PORTLAND • OREGON • 97208

NORTH WEST MARINE INC.

INVOICE

M/V MA SHAN HAI and Owners
c/o Norton Lilly & Company, Inc.
200 Market Street, Suite 860
Portland, Oregon 97201

DATE	7/18/90
OUR JOB NO.	4263
CUSTOMER'S ORDER NO.	
CONTRACT NO.	
INVOICE NO.	1238.01
TERMS	Net

CUSTOMER CODE NUMBER:

Duns No. 00-902-8580

M/V MA SHAN HAI

Furnished labor, material and equipment to accomplish repairs in accordance with the attached specifications.

Total amount due this invoice $ 11,487.00

ENTERED JUL 19 1990

PAST DUE PAYMENTS SHALL BEAR INTEREST AT THE HIGHEST LAWFUL RATE UNTIL REPAID, NOT TO EXCEED 1 1/2% PER MONTH

CORRESPONDENCE ADDRESS : P.O. BOX 3108 • PORTLAND • OREGON • 97208 PHONE: (503) 285-7557

NWMAR128151

MAIL PAYMENT TO: P.O. BOX 4000-58 • PORTLAND • OREGON • 97208

NORTH WEST MARINE INC.

INVOICE

M/V "OCEAN GARUDA" and Owners
c/o Transversal Shipping Company
120 N. Main, Suite 325
Banks, Oregon 97106

DATE	7/19/90
OUR JOB NO.	4265
CUSTOMER'S ORDER NO.	
CONTRACT NO.	
INVOICE NO.	1243.01
TERMS	Net

CUSTOMER CODE NUMBER:

Duns No. 00-902-8580

M/V "OCEAN GARUDA"

Furnished labor, material and equipment to accomplish repairs in accordance with the attached specifications.

Total Amount Due This Invoice $3,580.00

ENTERED JUL 23 1990

PAST DUE PAYMENTS SHALL BEAR INTEREST AT THE HIGHEST LAWFUL RATE UNTIL REPAID, NOT TO EXCEED 1 1/2% PER MONTH

CORRESPONDENCE ADDRESS : P.O. BOX 3108 • PORTLAND • OREGON • 97208 PHONE: (503) 285-7557

Susan Terry

MAIL PAYMENT TO: P.O. BOX 4000-58 • PORTLAND • OREGON • 97208

NORTH WEST MARINE INC.

INVOICE

M/V SEA JADE and Owners
c/o Pan Pacific Shipping Company
219 1st Avenue, Suite 201
Seattle, Washington 98104

DATE	7/31/90
OUR JOB NO.	4266
CUSTOMER'S ORDER NO.	
CONTRACT NO.	
INVOICE NO.	1251.01
TERMS	Net

CUSTOMER CODE NUMBER:

Duns No. 00-902-8580

Furnished labor, material and equipment to accomplish repairs in accordance with the attached specifications.

Total amount due this invoice $1,634.50

ENTERED AUG 0 1 1990

PAST DUE PAYMENTS SHALL BEAR INTEREST AT THE HIGHEST LAWFUL RATE UNTIL REPAID, NOT TO EXCEED 1 1/2% PER MONTH

CORRESPONDENCE ADDRESS : P.O. BOX 3108 • PORTLAND • OREGON • 97208 PHONE: (503) 285-7557

NWMAR128153

NORTHWEST MARINE IRON WORKS
INVOICES BY GALLEY

MONTH OF June 1990

	CUSTOMER	SHIP	INVOICE DATE	INVOICE NUMBER	INVOICE AMOUNT	INVOICE PAYMENT DATE	COMMISSION PERCENT	COMMISSION AMOUNT	COMMISSION DATE PAID	COMMISSION CHECK NUMBER
3110	Chartiers		6/01/90	114941	1,750.00	9/24/90	10%	175.00	10/26/90	2146
4920	HAL	Rotterdam	6/14/90	116001	965.00	7/23/90	10%	96.50	8/20/90	2142
4252	Transmarine	Ausgaritor	6/14/90	116201	800.00	w/o 12/90	10%	80.00	X	X
4249	Intl Marine	Wani Lake	6/14/90	116301	1,420.00	7-23-90	10%	142.00	8/20/90	2142
4251	EAC Transport	Hansa Danzig	6/14/90	116601	147,004.00	7-11-90	10%	14,700.40	7/19/90	2140
3345	Sunrise Shipping	Hyundai	6/20/90	119001	<10.00>	X	Write Off			
3393	Exploration Cruises	Colonial Explor	6/20/90	119101	<1,009.45>	X	Write Off			
3435	CPV Peruvian Line	Sea Wagner	6/20/90	119301	<320.00>	X	Write Off			
3466	Kerr Steamship	Esperanza	6/20/90	119401	<20.00>	X	Write Off			
3477	Barwill	Marie	6/20/90	119501	<1,500.00>	X	Write Off			
4912	HAL	Rotterdam	6/20/90	119601	24,360.00	X	Rotterdam			
4912	HAL	Rotterdam	6/20/90	119701	<24,360.00>	X	Rotterdam			
4247	Intl Shipping	Sandra M	6/01/90	114801	3869.00	6/29/90	10%	386.90	7/19/90	2138

MAIL PAYMENT TO: P.O. BOX 4000-58 • PORTLAND • OREGON • 97208

NORTH WEST MARINE INC.

INVOICE

Chantirs De L'Atlantique
Alshom-Atlantique
B.P. 400-44608
St. Nazarie, Cedex
FRANCE

DATE 6/1/90
OUR JOB NO. 3110
CUSTOMER'S ORDER NO.
CONTRACT NO. 1149.41
INVOICE NO. Net
TERMS

CUSTOMER CODE NUMBER:

Duns No. 00-902-8580

Warehouse charges for the main engine generator step-up gears, Ex-NOORDAM and NIEUW AMSTERDAM

Charges for the month of June, 1990

Total Amount Due This Invoice $ 1,750.00

ENTERED JUN 06 1990

PAST DUE PAYMENTS SHALL BEAR INTEREST AT THE HIGHEST LAWFUL RATE UNTIL REPAID, NOT TO EXCEED 1 1/2% PER MONTH

CORRESPONDENCE ADDRESS : P.O. BOX 3108 • PORTLAND • OREGON • 97208 PHONE: (503) 285-7557

NWMAR128155

MAIL PAYMENT TO: P.O. BOX 4000-58 • PORTLAND • OREGON • 97208

NORTH WEST MARINE INC.

INVOICE

S/S "ROTTERDAM" and Owners
c/o Holland America Line
300 Elliott Avenue West
Seattle, Washington 98119

DATE 6/14/90
OUR JOB NO. 4920
CUSTOMER'S ORDER NO.
CONTRACT NO.
INVOICE NO. 1160.01
TERMS Net

CUSTOMER CODE NUMBER:

Duns No. 00-902-8580

S/S "ROTTERDAM"

For furnishing labor, equipment and material to accomplish repairs in accordance with the attached specification.

Total Amount Due This Invoice $ 965.00

ENTERED JUN 15 1990

PAST DUE PAYMENTS SHALL BEAR INTEREST AT THE HIGHEST LAWFUL RATE UNTIL REPAID, NOT TO EXCEED 1 1/2% PER MONTH

CORRESPONDENCE ADDRESS : P.O. BOX 3108 • PORTLAND • OREGON • 97208 PHONE: (503) 285-7557

MAIL PAYMENT TO: P.O. BOX 4000-58 • PORTLAND • OREGON • 97208

NORTH WEST MARINE INC.

INVOICE

M/V "ANSGARITOR" and Owners
c/o Transmarine Navigation Corporation
600 N.W. Front Avenue, Suite 1
Portland, Oregon 97201

DATE 6/14/90
OUR JOB NO. 4252
CUSTOMER'S ORDER NO.
CONTRACT NO.
INVOICE NO. 1162.01
TERMS Net

CUSTOMER CODE NUMBER:

Duns No. 00-902-8580

M/V "ANSGARITOR"

For furnishing labor, equipment and material to accomplish repairs in accordance with the attached specification.

Total Amount Due This Invoice $ 800.00

ENTERED JUN 15 1990

PAST DUE PAYMENTS SHALL BEAR INTEREST AT THE HIGHEST LAWFUL RATE UNTIL REPAID, NOT TO EXCEED 1 1/2% PER MONTH

CORRESPONDENCE ADDRESS : P.O. BOX 3108 • PORTLAND • OREGON • 97208 PHONE: (503) 285-7557

NWMAR128157

MAIL PAYMENT TO: P.O. BOX 4000-58 • PORTLAND • OREGON • 97208

NORTH WEST MARINE INC.

INVOICE

M/V "WANI LAKE" and Owners
c/o International Marine Transport Line
1999 Harrison, Suite 930
Oakland, California 94612

DATE 6/14/90
OUR JOB NO. 4249
CUSTOMER'S ORDER NO.
CONTRACT NO.
INVOICE NO. 1163.01
TERMS Net

CUSTOMER CODE NUMBER:

Duns No. 00-902-6580

M/V "WANI LAKE"

For furnishing labor, equipment and material to accomplish repairs in accordance with the attached specification.

Total Amount Due This Invoice $1,420.00

ENTERED JUN 15 1990

PAST DUE PAYMENTS SHALL BEAR INTEREST AT THE HIGHEST LAWFUL RATE UNTIL REPAID, NOT TO EXCEED 1 1/2% PER MONTH

CORRESPONDENCE ADDRESS : P.O. BOX 3108 • PORTLAND • OREGON • 97208 PHONE: (503) 285-7557

MAIL PAYMENT TO: P.O. BOX 4000-58 • PORTLAND • OREGON • 97208

NORTH WEST MARINE INC.

INVOICE

M/V "HANSA DANZIG" and Owners
c/o E.A.C. Transport
317 S.W. Alder, St., Suite 950
Portland, Oregon 97204

DATE 6/14/90
OUR JOB NO. 4251
CUSTOMER'S ORDER NO.
CONTRACT NO.
INVOICE NO. 1166.01
TERMS Net

CUSTOMER CODE NUMBER:

Duns No. 00-902-8580

M/V "HANSA DANZIG"

For furnishing labor, equipment and material to accomplish repairs in accordance with the attached specification.

Total Amount Due This Invoice $147,004.00

ENTERED JUN 15 1990

PAST DUE PAYMENTS SHALL BEAR INTEREST AT THE HIGHEST LAWFUL RATE UNTIL REPAID, NOT TO EXCEED 1 1/2% PER MONTH

CORRESPONDENCE ADDRESS : P.O. BOX 3108 • PORTLAND • OREGON • 97208 PHONE: (503) 285-7557

MAIL PAYMENT TO: P.O. BOX 4000-58 • PORTLAND • OREGON • 97208

NORTH WEST MARINE INC.

INVOICE

Sunrise Shipping

DATE 20 June 1990
OUR JOB NO. N3345
CUSTOMER'S ORDER NO.
CONTRACT NO.
INVOICE NO. 1190-01
TERMS

CUSTOMER CODE NUMBER:

Duns No. 00-902-8580

CREDIT MEMO
(Internal Only)

Credit to write-off uncollectible accounts receivable.

Apply to Invoice # 3345-00

Total Amount This Credit: $10.00

Distribute to G/L Account # 1230-01

Douglas M. Temple
Asst. Controller

PAST DUE PAYMENTS SHALL BEAR INTEREST AT THE HIGHEST LAWFUL RATE UNTIL REPAID, NOT TO EXCEED 1 1/2% PER MONTH

CORRESPONDENCE ADDRESS : P.O. BOX 3108 • PORTLAND • OREGON • 97208 PHONE: (503) 285-7557

NWMAR128160

MAIL PAYMENT TO: P.O. BOX 4000-58 • PORTLAND • OREGON • 97208

NORTH WEST MARINE INC.

INVOICE

Exploration Cruises

DATE	20 June 1990
OUR JOB NO.	N3393
CUSTOMER'S ORDER NO.	
CONTRACT NO.	
INVOICE NO.	1191-01
TERMS	

CUSTOMER CODE NUMBER:

Duns No. 00-902-8580

CREDIT MEMO
(Internal Only)

Credit to write-off uncollectible accounts receivable.

Apply to Invoice #3393-00

ENTERED JUN 25 1990

Total Amount This Credit: $1,009.45

Distribute to G/L Account # 1230-01

Douglas M. Temple
Asst. Controller

PAST DUE PAYMENTS SHALL BEAR INTEREST AT THE HIGHEST LAWFUL RATE UNTIL REPAID, NOT TO EXCEED 1 1/2% PER MONTH

CORRESPONDENCE ADDRESS : P.O. BOX 3108 • PORTLAND • OREGON • 97208 PHONE: (503) 285-7557

NWMAR128161

MAIL PAYMENT TO: P.O. BOX 4000-58 • PORTLAND • OREGON • 97208

NORTH WEST MARINE INC.

INVOICE

C.P.V. Peruvian Line

DATE	20 June 1990
OUR JOB NO.	N3435
CUSTOMER'S ORDER NO.	
CONTRACT NO.	
INVOICE NO.	1193-01
TERMS	

CUSTOMER CODE NUMBER:

Duns No. 00-902-8580

CREDIT MEMO
(Internal Only)

Credit to write-off uncollectible accounts receivable.

Apply to Invoice # 3435-00

Total Amount This Credit: $320.00

Distribute to G/L Account # 1230-01

ENTERED JUN 25 1990

Douglas M. Temple
Asst. Controller

PAST DUE PAYMENTS SHALL BEAR INTEREST AT THE HIGHEST LAWFUL RATE UNTIL REPAID, NOT TO EXCEED 1 1/2% PER MONTH

CORRESPONDENCE ADDRESS : P.O. BOX 3108 • PORTLAND • OREGON • 97208 PHONE: (503) 285-7557

NWMAR128162

MAIL PAYMENT TO: P.O. BOX 4000-58 • PORTLAND • OREGON • 97208

NORTH WEST MARINE INC.

INVOICE

Kerr Steamship Company

DATE	20 June 1990
OUR JOB NO.	N3466
CUSTOMER'S ORDER NO.	
CONTRACT NO.	
INVOICE NO.	1194-01
TERMS	

CUSTOMER CODE NUMBER:

Duns No. 00-902-8580

CREDIT MEMO
(Internal Only)

Credit to write-off uncollectible accounts receivable.

Apply to Invoice # 3466-00

Total Amount This Credit: $20.00

Distribute to G/L Account # 1230-01

ENTERED JUN 25 1990

Douglas M. Temple
Asst. Controller

PAST DUE PAYMENTS SHALL BEAR INTEREST AT THE HIGHEST LAWFUL RATE UNTIL REPAID, NOT TO EXCEED 1 1/2% PER MONTH

CORRESPONDENCE ADDRESS : P.O. BOX 3108 • PORTLAND • OREGON • 97208 PHONE: (503) 285-7557

NWMAR128163

MAIL PAYMENT TO: P.O. BOX 4000-58 • PORTLAND • OREGON • 97208

NORTH WEST MARINE INC.

INVOICE

Barwill

DATE 20 June 1990
OUR JOB NO. N3477
CUSTOMER'S ORDER NO.
CONTRACT NO.
INVOICE NO. 1195-01
TERMS

CUSTOMER CODE NUMBER:

Duns No. 00-902-8580

CREDIT MEMO
(Internal Only)

Credit to write-off uncollectible accounts receivable.

Apply to Invoice # 3477-00

Total Amount This Credit: $1,500.00

Distribute to G/L Account # 1230-01

ENTERED JUN 25 1990

Douglas M. Temple
Asst. Controller

PAST DUE PAYMENTS SHALL BEAR INTEREST AT THE HIGHEST LAWFUL RATE UNTIL REPAID, NOT TO EXCEED 1 1/2% PER MONTH

CORRESPONDENCE ADDRESS : P.O. BOX 3108 • PORTLAND • OREGON • 97208 PHONE: (503) 285-7557

NWMAR128164

MAIL PAYMENT TO: P.O. BOX 4000-58 • PORTLAND • OREGON • 97208

NORTH WEST MARINE INC.

INVOICE

S/S Rotterdam & Owners
Holland America Line
300 Elliott Avenue West
Seattle, Washington

DATE 20 June 1990
OUR JOB NO. N4912
CUSTOMER'S ORDER NO.
CONTRACT NO.
INVOICE NO. 1196-01
TERMS

CUSTOMER CODE NUMBER:

Duns No. 00-902-8580

DEBIT MEMO
(Internal Only)

Debit for mis-applied debits, credits & payments.

Apply to Invoice # 4912-03

ENTERED JUN 25 1990

Total Amount This Debit: $24,360.00

Invoices 1196 and 1197 are to clear mis-applied debits and credits to clear A/R open items.
Net dollar value of both invoices is zero.

Douglas M. Temple
Asst. Controller

PAST DUE PAYMENTS SHALL BEAR INTEREST AT THE HIGHEST LAWFUL RATE UNTIL REPAID, NOT TO EXCEED 1 1/2% PER MONTH

CORRESPONDENCE ADDRESS : P.O. BOX 3108 • PORTLAND • OREGON • 97208 PHONE: (503) 285-7557

NWMAR128165

MAIL PAYMENT TO: P.O. BOX 4000-58 • PORTLAND • OREGON • 97208

NORTH WEST MARINE INC.

INVOICE

S/S Rotterdam & Owners
Holland America Line
300 Elliott Avenue West
Seattle, Washington

DATE	20 June 1990
OUR JOB NO.	N4912
CUSTOMER'S ORDER NO.	
CONTRACT NO.	
INVOICE NO.	1197-01
TERMS	

CUSTOMER CODE NUMBER:

Duns No. 00-902-8580

CREDIT MEMO
(Internal Only)

Credit for mis-applied debits, credits & payments.

Apply to Invoice #4192-03

Total Amount This Credit: $24,360.00

Invoices 1196 and 1197 are to clear mis-applied debits and credits to clear A/R open items.
Net dollar value of both invoices is zero.

Douglas M. Temple
Asst. Controller

PAST DUE PAYMENTS SHALL BEAR INTEREST AT THE HIGHEST LAWFUL RATE UNTIL REPAID, NOT TO EXCEED 1 1/2% PER MONTH

CORRESPONDENCE ADDRESS : P.O. BOX 3108 • PORTLAND • OREGON • 97208 PHONE: (503) 285-7557

MAIL PAYMENT TO: P.O. BOX 4000-58 • PORTLAND • OREGON • 97208

NORTH WEST MARINE INC.

INVOICE

M/V SANDRA M and Owners
c/o International Shipping Co.
421 S.W. 6th
Portland, Oregon 97204

DATE
OUR JOB NO. 6/1/90
CUSTOMER'S ORDER NO. 4247
CONTRACT NO.
INVOICE NO. 1148.01
TERMS Net

CUSTOMER CODE NUMBER:

Duns No. 00-902-8580

M/V SANDRA M

Furnish labor, material and equipment to accomplish repairs in accordance with the attached specifications.

Total Amount Due This Invoice $ 3,869.00

ENTERED JUN 06 1990

PAST DUE PAYMENTS SHALL BEAR INTEREST AT THE HIGHEST LAWFUL RATE UNTIL REPAID, NOT TO EXCEED 1 1/2% PER MONTH

CORRESPONDENCE ADDRESS : P.O. BOX 3108 • PORTLAND • OREGON • 97208 PHONE: (503) 285-7557

NWMAR128167

NORTHWEST MARINE IRON WORKS
INVOICES BY CALLEY

MONTH OF May 1990

	CUSTOMER	SHIP	INVOICE DATE	INVOICE NUMBER	INVOICE AMOUNT	INVOICE PAYMENT DATE	COMMISSION PERCENT	COMMISSION AMOUNT	COMMISSION DATE PAID	COMMISSION CHECK NUMBER
3110	Chantiers De L'Atlantique		5/04/90	108737	1,500.00	7-05-90	10%	150.00	7/19/90	2140
~~4190~~		~~Tug Portland~~	~~5/04/90~~	~~119098~~	~~<1,684.00>~~					
~~4190~~		~~Tug Portland~~	~~5/04/90~~	~~119099~~	~~<1,684.00>~~					
4909	Holland America	N. Amsterdam	5/18/90	110101	1,000,000.00		10%	140,937.82	7/6/90	2138
			5/18/90	110402	146,335.00					
			5/18/90	110503	110,703.00					
			5/18/90	110604	12,881.00					
			5/23/90	111705	1,059,793.28					
			5/23/90	111806	63,418.87					
			5/23/90	111907	16,247.00					
			5/25/90	113499	<1,000,000.00>					
4241	Pan Pacific Shipping	Sea Jade	5/4/90	108601	1,993.00	8/27/90	10%	199.30	9/21/90	2145
4904	HAL	Rotterdam	5/31/90	113999	21,502.00	✓	Rotterdam			
4904				114099	<21,205.00>	✓	Rotterdam			
4907		Nieuw Amster.		114199	<35,059.00>	✓	Nieuw Amsterdam			
4907				114299	35,059.00	✓				
4912		Rotterdam		114399	59,500.00	✓	Rotterdam			
4912				114499	<24,360.00>	✓				
4912				114599	<35,140.00>	✓				
4904	HAL	Rotterdam	5/31/90	113999	<297.00>	✓	Rotterdam			

Susan Dero

MAIL PAYMENT TO: P.O. BOX 4000-58 • PORTLAND • OREGON • 97208

NORTH WEST MARINE INC.

INVOICE

Chantiers De L'Atlantique
Alshom-Atlantique
B.P. 400-44608
St. Nazaire, Cedex
FRANCE

DATE	5/4/90
OUR JOB NO.	3110
CUSTOMER'S ORDER NO.	
CONTRACT NO.	1087.37
INVOICE NO.	Net
TERMS	

CUSTOMER CODE NUMBER:

Duns No. 00-902-8580

Warehouse charges for the main engine generator step-up gears, Ex-NOORDAM and NIEUW AMSTERDAM.

Charges for the month of May, 1990

Total Amount Due This Invoice $1,500.00

ENTERED MAY 07 1990

PAST DUE PAYMENTS SHALL BEAR INTEREST AT THE HIGHEST LAWFUL RATE UNTIL REPAID, NOT TO EXCEED 1 1/2% PER MONTH

CORRESPONDENCE ADDRESS: P.O. BOX 3108 • PORTLAND • OREGON • 97208 PHONE: (503) 285-7557

NWMAR128169

5/4/90

Adjust Credit Memo entered as a Debit.

See 2/21/90 Invoice 419002

---

(1) Cust N4190
CM ~~Inv~~ 419099 Apply to 419002
Amt <1,684.00>

Reverse incorrect entry

ENTERED MAY 07 1990

(2) Cust N4190
CM 419098 Apply to 419002
Amt (1,684.00)

Record correctly

ENTERED MAY 07 1990

Susan Ferro

664

NORTHWEST MARINE IRON WORKS

SHIP REPAIRERS
GENERAL MACHINE WORK
ENGINEERING

MAIL PAYMENT TO:
P.O. BOX 4000-58
PORTLAND, OREGON 97208

INVOICE

TUG PORTLAND and Owners
c/o Shaver Transportation
4900 N.W. Front
Portland, Oregon 97210

DATE February 21 1990
OUR JOB NO. 4190
CUSTOMER'S ORDER NO.
CONTRACT NO. 4190-2
INVOICE NO. Credit
TERMS

CUSTOMER CODE NUMBER:

Duns No. 00-902-8

TUG PORTLAND

To reduce original invoice 4190-1 for warranty repairs to vessel reference attachment.

Total Credit <u>$ 1,684.00</u>

Partial Chandler Pet

ENTERED FEB 26 1990

ENTERED MAR 1 1990

PAST DUE PAYMENTS SHA' ' BEAR INTEREST AT THE HIGHEST LAWFUL RATE UNTIL PAID, NOT TO EXCEED 1½% PER MONTH.

CORRESPO..ENCE ADDRESS P.O. BOX 3109 PORTLAND, OREGON 9 PHONE (503) 285-7557

NWMAR128171

MAIL PAYMENT TO: P.O. BOX 4000-58 • PORTLAND • OREGON • 97208

NORTH WEST MARINE INC.

INVOICE

M/V NIEUW AMSTERDAM and Owners
c/o Holland America Lines
300 Elliott Avenue West
Seattle, WA 98119

DATE	5/18/90
OUR JOB NO.	4909
CUSTOMER'S ORDER NO.	
CONTRACT NO.	
INVOICE NO.	1101-01
TERMS	Net

CUSTOMER CODE NUMBER:

Duns No. 00-902-8580

M/V "NIEUW AMSTERDAM"
PROGRESS BILLING NO. 1

For attending vessel and accomplishing repairs in accordance with the specifications.

Total amount due this invoice $1,000,000.00

ENTERED MAY 22 1990

APPROVED:

Mr. N. Hogendoorn
Director - Technical Department

May 18, 1990

PAST DUE PAYMENTS SHALL BEAR INTEREST AT THE HIGHEST LAWFUL RATE UNTIL REPAID, NOT TO EXCEED 1 1/2% PER MONTH

CORRESPONDENCE ADDRESS : P.O. BOX 3108 • PORTLAND • OREGON • 97208 PHONE: (503) 285-7557

NWMAR128172

MAIL PAYMENT TO: P.O. BOX 4000-58 • PORTLAND • OREGON • 97208

NORTH WEST MARINE INC.

Susan Sims

INVOICE

M/V NIEUW AMSTERDAM and Owners
c/o Holland America Lines
300 Elliott Avenue West
Seattle, WA 98119

DATE	5/18/90
OUR JOB NO.	4909
CUSTOMER'S ORDER NO.	
CONTRACT NO.	
INVOICE NO.	1104-02
TERMS	Net

CUSTOMER CODE NUMBER:

Duns No. 00-902-8580

M/V "NIEUW AMSTERDAM"

For furnishing drydock common charges in accordance with attached breakdown.

Total Agreed Price $146,335.00

ENTERED MAY 22 1990

PAST DUE PAYMENTS SHALL BEAR INTEREST AT THE HIGHEST LAWFUL RATE UNTIL REPAID, NOT TO EXCEED 1 1/2% PER MONTH

CORRESPONDENCE ADDRESS : P.O. BOX 3108 • PORTLAND • OREGON • 97208 PHONE: (503) 285-7557

NWMAR128173

MAIL PAYMENT TO: P.O. BOX 4000-58 • PORTLAND • OREGON • 97208

NORTH WEST MARINE INC.

INVOICE

M/V NIEUW AMSTERDAM and Owners
c/o Holland America Lines
300 Elliott Avenue West
Seattle, WA 98119

DATE	5/18/90
OUR JOB NO.	4909
CUSTOMER'S ORDER NO.	
CONTRACT NO.	
INVOICE NO.	1105-03
TERMS	Net

CUSTOMER CODE NUMBER:

Duns No. 00-902-8580

M/V "NIEUW AMSTERDAM"

For furnishing labor, material and equipment to accomplish repairs as set forth in the attached specifications.

Total Agreed Price $110,703.00

ENTERED MAY 2 2 1990

PAST DUE PAYMENTS SHALL BEAR INTEREST AT THE HIGHEST LAWFUL RATE UNTIL REPAID, NOT TO EXCEED 1 1/2% PER MONTH

CORRESPONDENCE ADDRESS : P.O. BOX 3108 • PORTLAND • OREGON • 97208 PHONE: (503) 285-7557

MAIL PAYMENT TO: P.O. BOX 4000-58 • PORTLAND • OREGON • 97208

NORTH WEST MARINE INC.

INVOICE

M/V NIEUW AMSTERDAM and Owners
c/o Holland America Lines
300 Elliott Avenue West
Seattle, WA 98119

DATE	5/18/90
OUR JOB NO.	4909
CUSTOMER'S ORDER NO.	
CONTRACT NO.	
INVOICE NO.	1106-04
TERMS	Net

CUSTOMER CODE NUMBER:

Duns No. 00-902-8580

M/V "NIEUW AMSTERDAM"

For furnishing labor, material and equipment to accomplish repairs to the port and starboard anchor chains as set forth in the attached specifications.

Total Agreed Price $12,881.00

ENTERED MAY 2 2 1990

PAST DUE PAYMENTS SHALL BEAR INTEREST AT THE HIGHEST LAWFUL RATE UNTIL REPAID, NOT TO EXCEED 1 1/2% PER MONTH

CORRESPONDENCE ADDRESS : P.O. BOX 3108 • PORTLAND • OREGON • 97208. PHONE: (503) 285-7557

NWMAR128175

MAIL PAYMENT TO: P.O. BOX 4000-58 • PORTLAND • OREGON • 97208

NORTH WEST MARINE INC.

INVOICE

M/V NIEUW AMSTERDAM and Owners
c/o Holland America Line
300 Elliott Avenue West
Seattle, WA 98119

DATE 5/23/90
OUR JOB NO. 4909
CUSTOMER'S ORDER NO.
CONTRACT NO. 1117-05
INVOICE NO.
TERMS Net

CUSTOMER CODE NUMBER:

Duns No. 00-902-8580

M/V NIEUW AMSTERDAM

For furnishing labor, material and equipment to accomplish repairs in accordance with the attached specification items 0001 - 0077 inclusive.

Total Negotiated and
Agreed Price This Invoice $1,059,793.28

ENTERED MAY 25 1990

PAST DUE PAYMENTS SHALL BEAR INTEREST AT THE HIGHEST LAWFUL RATE UNTIL REPAID. NOT TO EXCEED 1 1/2% PER MONTH

CORRESPONDENCE ADDRESS : P.O. BOX 3108 • PORTLAND • OREGON • 97208 PHONE: (503) 285-7557

NWMAR128176

MAIL PAYMENT TO: P.O. BOX 4000-58 • PORTLAND • OREGON • 97208

NORTH WEST MARINE INC.

INVOICE

M/V NIEUW AMSTERDAM and Owners
c/o Holland America Line
300 Elliott Avenue West
Seattle, WA 98119

DATE 5/23/90
OUR JOB NO. 4909
CUSTOMER'S ORDER NO.
CONTRACT NO.
INVOICE NO. 1118-06
TERMS Net

CUSTOMER CODE NUMBER:

Duns No. 00-902-8580

M/V NIEUW AMSTERDAM

For furnishing drydock and drydock services in accordance with attached Portland Ship Repair yard invoice.

Total Amount Due This Invoice $63,418.87

ENTERED MAY 25 1990

PAST DUE PAYMENTS SHALL BEAR INTEREST AT THE HIGHEST LAWFUL RATE UNTIL REPAID, NOT TO EXCEED 1 1/2% PER MONTH

CORRESPONDENCE ADDRESS: P.O. BOX 3108 • PORTLAND • OREGON • 97208 PHONE: (503) 285-7557

NWMAR128177

MAIL PAYMENT TO: P.O. BOX 4000-58 • PORTLAND • OREGON • 97208

NORTH WEST MARINE INC.

Susan Jerro

INVOICE

M/V NIEUW AMSTERDAM and Owners
c/o Holland America Line
300 Elliott Avenue West
Seattle, WA 98119

DATE 5/23/90
OUR JOB NO. 4909
CUSTOMER'S ORDER NO.
CONTRACT NO.
INVOICE NO. 1119-07
TERMS Net

CUSTOMER CODE NUMBER:

Duns No. 00-902-8580

M/V NIEUW AMSTERDAM

For furnishing tugboat and pilotage services in accordance with attached invoices.

Tugboat charges	$14,977.00
Pilotage charges	1,270.00
Total Amount Due This Invoice	$16,247.00

ENTERED MAY 25 1990

PAST DUE PAYMENTS SHALL BEAR INTEREST AT THE HIGHEST LAWFUL RATE UNTIL REPAID. NOT TO EXCEED 1 1/2% PER MONTH

CORRESPONDENCE ADDRESS : P.O. BOX 3108 • PORTLAND • OREGON • 97208 PHONE: (503) 285-7557

NWMAR128178

A DIVISION OF SOUTHWEST MARINE, INC.
P.O. Box 3109 • Portland • Oregon • 97208 • 5555 N. Channel Ave. • Bldg 2 • Portland • Oregon • 97217
(503) 285-7557 • TWX: 910-464-6107 NORMARINE PTL • FAX: (503) 240-6600

NORTH WEST MARINE INC.

INVOICE

M/V Nieuw Amsterdam & Owners
Holland America Line
300 Elliott Avenue West
Seattle, Washington

DATE: 25 May 1990
NWM JOB NO: N4909
NWM INVOICE NO: 1134-99

CREDIT MEMO
(Internal Only)

Credit for Progress Billing #1 which was rebilled at final.

Apply to Invoice # 1117-05

Total Amount This Credit: $1,000,000.00

ENTERED MAY 25 1990

Douglas M. Temple
Asst. Controller

Susan Jerr

MAIL PAYMENT TO: P.O. BOX 4000-58 • PORTLAND • OREGON • 97208

NORTH WEST MARINE INC.

INVOICE

M/V "SEA JADE" and Owners
c/o Pan Pacific Shipping
219 1st Avenue South, Suite 201
Seattle, WA 98104

DATE	5/4/90
OUR JOB NO.	4241
CUSTOMER'S ORDER NO.	
CONTRACT NO.	1086.01
INVOICE NO.	
TERMS	Net

CUSTOMER CODE NUMBER:

Duns No. 00-902-8580

~~M/V SEA JADE~~

For furnishing labor, material and equipment to
attend vessel in accordance with attached specifications.

Total Amount Due This Invoice $1,993.00

ENTERED MAY 07 1990

PAST DUE PAYMENTS SHALL BEAR INTEREST AT THE HIGHEST LAWFUL RATE UNTIL REPAID, NOT TO EXCEED 1 1/2% PER MONTH

CORRESPONDENCE ADDRESS : P.O. BOX 3108 • PORTLAND • OREGON • 97208 PHONE: (503) 285-7557

MAIL PAYMENT TO: P.O. BOX 4000-58 • PORTLAND • OREGON • 97208

NORTH WEST MARINE INC.

INVOICE

S/S Rotterdam & Owners
Holland America Line
300 Elliott Avenue West
Seattle, Washington

DATE 31 May 1990
OUR JOB NO. N4904
CUSTOMER'S ORDER NO.
CONTRACT NO.
INVOICE NO. 1139-99
TERMS

CUSTOMER CODE NUMBER:

Duns No. 00-902-8580

DEBIT MEMO
(Internal Only)

Debit for mis-applied debits, credits & payments.

Apply to Invoice # 4904-17

ENTERED MAY 31 1990

Total Amount This Debit: $21,205.00

Invoices 1139, 1140, 1141, 1142, 1143, 1144, & 1145 are to clear mis-applied debits and credits to clear A/R open items. Net dollar value of all seven invoices is zero.

Entered
Reg 1284 21,502.00
Reg <297.00>

Douglas M. Temple
Asst. Controller

PAST DUE PAYMENTS SHALL BEAR INTEREST AT THE HIGHEST LAWFUL RATE UNTIL REPAID, NOT TO EXCEED 1 1/2% PER MONTH

CORRESPONDENCE ADDRESS : P.O. BOX 3108 • PORTLAND • OREGON • 97208 PHONE: (503) 285-7557

NWMAR128181

MAIL PAYMENT TO: P.O. BOX 4000-58 • PORTLAND • OREGON • 97208

NORTH WEST MARINE INC.

INVOICE

S/S Rotterdam & Owners
Holland America Line
300 Elliott Avenue West
Seattle, Washington

DATE 31 May 1990
OUR JOB NO. N4904
CUSTOMER'S ORDER NO.
CONTRACT NO.
INVOICE NO. 1140-99
TERMS

CUSTOMER CODE NUMBER:

Duns No. 00-902-8580

CREDIT MEMO
(Internal Only)

Credit for mis-applied debits, credits & payments.

Apply to Invoice # 4904-15

ENTERED MAY 3 1 1990

Total Amount This Credit: $21,205.00

Invoices 1139, 1140, 1141, 1142, 1143, 1144, & 1145 are to clear mis-applied debits and credits to clear A/R open items. Net dollar value of all seven invoices is zero.

Douglas M. Temple
Asst. Controller

PAST DUE PAYMENTS SHALL BEAR INTEREST AT THE HIGHEST LAWFUL RATE UNTIL REPAID, NOT TO EXCEED 1 1/2% PER MONTH

CORRESPONDENCE ADDRESS : P.O. BOX 3108 • PORTLAND • OREGON • 97208 PHONE: (503) 285-7557

NWMAR128182

MAIL PAYMENT TO: P.O. BOX 4000-58 • PORTLAND • OREGON • 97208

NORTH WEST MARINE INC.

INVOICE

M/V Nieuw Amsterdam & Owners
Holland America Line
300 Elliott Avenue West
Seattle, Washington

DATE 31 May 1990
OUR JOB NO. N4907
CUSTOMER'S ORDER NO.
CONTRACT NO.
INVOICE NO. 1141-99
TERMS

CUSTOMER CODE NUMBER:

Duns No. 00-902-8580

CREDIT MEMO
(Internal Only)

Credit for mis-applied debits, credits & payments.

Apply to Invoice # 4907-01

ENTERED MAY 3 1 1990

Total Amount This Credit: $35,059.00

Invoices 1139, 1140, 1141, 1142, 1143, 1144, & 1145 are to clear mis-applied debits and credits to clear A/R open items. Net dollar value of all seven invoices is zero.

Douglas M. Temple
Asst. Controller

PAST DUE PAYMENTS SHALL BEAR INTEREST AT THE HIGHEST LAWFUL RATE UNTIL REPAID, NOT TO EXCEED 1 1/2% PER MONTH

CORRESPONDENCE ADDRESS : P.O. BOX 3108 • PORTLAND • OREGON • 97208 PHONE: (503) 285-7557

NWMAR128183

MAIL PAYMENT TO: P.O. BOX 4000-58 • PORTLAND • OREGON • 97208

NORTH WEST MARINE INC.

INVOICE

M/V Nieuw Amsterdam & Owners
Holland America Line
300 Elliott Avenue West
Seattle, Washington

DATE 31 May 1990
OUR JOB NO. N4907
CUSTOMER'S ORDER NO.
CONTRACT NO.
INVOICE NO. 1142-99
TERMS

CUSTOMER CODE NUMBER:

Duns No. 00-902-8580

DEBIT MEMO
(Internal Only)

Debit for mis-applied debits, credits & payments.

Apply to Invoice # 4907-02

ENTERED MAY 3 1 1990

Total Amount This Debit: $35,059.00

Invoices 1139, 1140, 1141, 1142, 1143, 1144, & 1145 are to clear mis-applied debits and credits to clear A/R open items. Net dollar value of all seven invoices is zero.

Douglas M. Temple
Asst. Controller

PAST DUE PAYMENTS SHALL BEAR INTEREST AT THE HIGHEST LAWFUL RATE UNTIL REPAID, NOT TO EXCEED 1 1/2% PER MONTH

CORRESPONDENCE ADDRESS : P.O. BOX 3108 • PORTLAND • OREGON • 97208 PHONE: (503) 285-7557

NWMAR128184

MAIL PAYMENT TO: P.O. BOX 4000-58 • PORTLAND • OREGON • 97208

NORTH WEST MARINE INC.

INVOICE

S/S Rotterdam & Owners
Holland America Line
300 Elliott Avenue West
Seattle, Washington

DATE 31 May 1990
OUR JOB NO. N4912
CUSTOMER'S ORDER NO.
CONTRACT NO.
INVOICE NO. 1143-99
TERMS

CUSTOMER CODE NUMBER:

Duns No. 00-902-8580

DEBIT MEMO
(Internal Only)

Debit for mis-applied debits, credits & payments.

Apply to Invoice # 4912-01

ENTERED MAY 3 1 1990

Total Amount This Debit: $59,500.00

Invoices 1139, 1140, 1141, 1142, 1143, 1144, & 1145 are to clear mis-applied debits and credits to clear A/R open items. Net dollar value of all seven invoices is zero.

Douglas M. Temple
Asst. Controller

PAST DUE PAYMENTS SHALL BEAR INTEREST AT THE HIGHEST LAWFUL RATE UNTIL REPAID, NOT TO EXCEED 1 1/2% PER MONTH

CORRESPONDENCE ADDRESS : P.O. BOX 3108 • PORTLAND • OREGON • 97208 PHONE: (503) 285-7557

NWMAR128185

MAIL PAYMENT TO: P.O. BOX 4000-58 • PORTLAND • OREGON • 97208

NORTH WEST MARINE INC.

INVOICE

S/S Rotterdam & Owners
Holland America Line
300 Elliott Avenue West
Seattle, Washington

DATE	31 May 1990
OUR JOB NO.	N4912
CUSTOMER'S ORDER NO.	
CONTRACT NO.	
INVOICE NO.	1144-99
TERMS	

CUSTOMER CODE NUMBER:

Duns No. 00-902-8580

CREDIT MEMO
(Internal Only)

Credit for mis-applied debits, credits & payments.

Apply to Invoice # 4912-03

ENTERED MAY 3 1 1990

Total Amount This Credit: $24,360.00

Invoices 1139, 1140, 1141, 1142, 1143, 1144, & 1145 are to clear mis-applied debits and credits to clear A/R open items. Net dollar value of all seven invoices is zero.

Douglas M. Temple
Asst. Controller

PAST DUE PAYMENTS SHALL BEAR INTEREST AT THE HIGHEST LAWFUL RATE UNTIL REPAID, NOT TO EXCEED 1 1/2% PER MONTH

CORRESPONDENCE ADDRESS : P.O. BOX 3108 • PORTLAND • OREGON • 97208 PHONE: (503) 285-7557

NWMAR128186

MAIL PAYMENT TO: P.O. BOX 4000-58 • PORTLAND • OREGON • 97208

NORTH WEST MARINE INC.

INVOICE

S/S Rotterdam & Owners
Holland America Line
300 Elliott Avenue West
Seattle, Washington

DATE	31 May 1990
OUR JOB NO.	N4912
CUSTOMER'S ORDER NO.	
CONTRACT NO.	
INVOICE NO.	1145-99
TERMS	

CUSTOMER CODE NUMBER:

Duns No. 00-902-8580

CREDIT MEMO
(Internal Only)

Credit for mis-applied debits, credits & payments.

Apply to Invoice # 4912-04

ENTERED MAY 3 1 1990

Total Amount This Credit: $35,140.00

Invoices 1139, 1140, 1141, 1142, 1143, 1144, & 1145 are to clear mis-applied debits and credits to clear A/R open items. Net dollar value of all seven invoices is zero.

Douglas M. Temple
Asst. Controller

PAST DUE PAYMENTS SHALL BEAR INTEREST AT THE HIGHEST LAWFUL RATE UNTIL REPAID, NOT TO EXCEED 1 1/2% PER MONTH

CORRESPONDENCE ADDRESS : P.O. BOX 3108 • PORTLAND • OREGON • 97208 PHONE: (503) 285-7557

NWMAR128187

NORTHWEST MARINE IRON WORKS
INVOICES BY CALLEY

MONTH OF April 1990

CUSTOMER	SHIP	INVOICE DATE	INVOICE NUMBER	INVOICE AMOUNT	INVOICE PAYMENT DATE	COMMISSION PERCENT	COMMISSION AMOUNT	COMMISSION DATE PAID	COMMISSION CHECK NUMBER
Star Shipping	Star Geiranger	4/3/90	4229-1	✓ 4,950.00	4/26/90	10%	495.00	5/31/90	2135
Kerr Steamship	Reliance 1	4/3/90	4233-1	✓ 4,115.00	5/18/90	10%	411.50	5/31/90	2135
Sunrise Shipping	Hyundai 3	4/3/90	4230-1	✓ 1,062.00	5/17/90	10%	106.20	5/31/90	2135
Star Shipping	Star Geiranger	4/3/90	4229-2	✓ 5,465.00	4/26/90	10%	546.50	5/31/90	2135
Rogers Terminal	Pisces Power	4/4/90	4237-1	✓ 4,811.00	4/17/90	10%	481.10	4/24/90	2129
First Ocean Marine	Northwest Skeie	4/4/90	4232-1	✓ 33,644.60		10%	3,364.46		
Chantiers		3/1/90	3110-39	✓ 1,500.00	6/01/90	10%	150.00	7/6/90	2138
Chantiers		4/1/90	3110-40	✓ 1,500.00	6/01/90	10%	150.00	7/6/90	2138
Sunrise Shipping	Hyundai	4/4/90	4235-1	✓ 8,689.00	7/17/90	10%	868.90	8/20/90	2142
Matson Agencies	Ken Spanker	4/4/90	4231-1	✓ 13,805.00	6/25/90	10%	1,380.50	7/6/90	2138
Merit Steamship	Nopal Cherry	4/4/90	4236-1	✓ 1,565.00	6/4/90	10%	156.50	7/6/90	2138
First Ocean Marine	Northwest Skeie	4/13/90	4232-1	<33,644.60>	—	—	Ø	—	—
Karlander Shipping	Northwest Skeie	4/13/90	104503	33,644.60	—	—		—	—
Bermuda Star Line	Bermuda Star	4/24/90	105811	39,723.08		Bermuda Star		—	—
American Hawaii Cruises	Constitution	4/13/90	VARIOUS	3,466,342.00		20% on growth	118,138.60	6/27/90	2137

NWMAR128188

751

NORTH WEST MARINE INC.

MAIL PAYMENT TO: P.O. BOX 4000-58 • PORTLAND • OREGON • 97208

INVOICE

M/V "STAR GEIRANGER" and Owners
c/o Star Shipping Company
Oregon Pioneer Building, Suite 307
Portland, Oregon 97204

DATE	4/3/90
OUR JOB NO.	4229
CUSTOMER'S ORDER NO.	
CONTRACT NO.	4229-1
INVOICE NO.	Net
TERMS	

CUSTOMER CODE NUMBER:

Duns No. 00-902-8580

M/V "STAR GEIRANGER"

Furnished labor, equipment and material to accomplish work in accordance with the attached specifications.

Total Amount Due This Invoice $4,950.00

Final
Calley
Net

ENTERED APR 6 1990

PAST DUE PAYMENTS SHALL BEAR INTEREST AT THE HIGHEST LAWFUL RATE UNTIL REPAID, NOT TO EXCEED 1 1/2% PER MONTH

CORRESPONDENCE ADDRESS : P.O. BOX 3108 • PORTLAND • OREGON • 97208 PHONE: (503) 285-7557

NWMAR128189

752

MAIL PAYMENT TO: P.O. BOX 4000-58 • PORTLAND • OREGON • 97208

NORTH WEST MARINE INC.

INVOICE

M/V "RELIANCE 1" and Owners
c/o Kerr Steamship Company, Inc.
1 S.W. Columbia, Suite 450
Portland, Oregon 97258

DATE	4/3/90
OUR JOB NO.	4233
CUSTOMER'S ORDER NO.	
CONTRACT NO.	4233-1
INVOICE NO.	Net
TERMS	

CUSTOMER CODE NUMBER:

Duns No. 00-902-8580

M/V "RELIANCE 1"

Furnished labor, equipment and material to accomplish work in accordance with the attached specifications.

Total Amount Due This Invoice $4,115.00

FINAL

Calley

Net

ENTERED APR 6 1990

PAST DUE PAYMENTS SHALL BEAR INTEREST AT THE HIGHEST LAWFUL RATE UNTIL REPAID, NOT TO EXCEED 1 1/2% PER MONTH

CORRESPONDENCE ADDRESS : P.O. BOX 3108 • PORTLAND • OREGON • 97208 PHONE: (503) 285-7557

NWMAR128190

753

MAIL PAYMENT TO: P.O. BOX 4000-58 • PORTLAND • OREGON • 97208

NORTH WEST MARINE INC.

INVOICE

M/V "HYUNDAI NO. 3"
c/o Sunrise Shipping Agency, Inc.
1515 S.W. 5th Avenue
Suite 1050
Portland, Oregon 97201

DATE	4/3/90
OUR JOB NO.	4230
CUSTOMER'S ORDER NO.	
CONTRACT NO.	
INVOICE NO.	4230-1
TERMS	Net

CUSTOMER CODE NUMBER:

Duns No. 00-902-8580

M/V "HYUNDAI NO. 3"

Furnished labor, material and equipment to accomplish repairs in accordance with the attached specifications.

Total Amount Due This Invoice $1,062.00

Final Calley Net

ENTERED APR 6 1990

PAST DUE PAYMENTS SHALL BEAR INTEREST AT THE HIGHEST LAWFUL RATE UNTIL REPAID, NOT TO EXCEED 1 1/2% PER MONTH

CORRESPONDENCE ADDRESS : P.O. BOX 3108 • PORTLAND • OREGON • 97208 PHONE: (503) 285-7557

NWMAR128191

754

MAIL PAYMENT TO: P.O. BOX 4000-58 • PORTLAND • OREGON • 97208

NORTH WEST MARINE INC.

INVOICE

M/V "STAR GEIRANGER" and Owners
c/o Star Shipping Company
Oregon Pioneer Building, Suite 307
Portland, Oregon 97204

DATE	4/3/90
OUR JOB NO.	4229
CUSTOMER'S ORDER NO.	
CONTRACT NO.	4229-2
INVOICE NO.	Net
TERMS	

CUSTOMER CODE NUMBER:

Duns No. 00-902-8580

M/V "STAR GEIRANGER"

Furnished labor, equipment and material to accomplish work in accordance with the attached specifications.

Total Amount Due This Invoice $5,465.00

Final
Calley
NW

ENTERED APR 6 1990

PAST DUE PAYMENTS SHALL BEAR INTEREST AT THE HIGHEST LAWFUL RATE UNTIL REPAID, NOT TO EXCEED 1 1/2% PER MONTH

CORRESPONDENCE ADDRESS : P.O. BOX 3108 • PORTLAND • OREGON • 97208 PHONE: (503) 285-7557

NWMAR128192

755

MAIL PAYMENT TO: P.O. BOX 4000-58 • PORTLAND • OREGON • 97208

NORTH WEST MARINE INC.

INVOICE

M/V "PISCES POWER" and Owners
c/o Rogers Terminal & Shipping
50 S.W. 2nd
Portland, Oregon 97204

DATE	4/4/90
OUR JOB NO.	4237
CUSTOMER'S ORDER NO.	
CONTRACT NO.	4237-1
INVOICE NO.	Net
TERMS	

CUSTOMER CODE NUMBER:

Duns No. 00-902-8580

M/V "PISCES POWER"

Furnished labor, material and equipment to accomplish work in accordance with the attached specification.

Total Amount Due This Invoice $4,811.00

Final
Calley
Net

ENTERED APR 6 1990

PAST DUE PAYMENTS SHALL BEAR INTEREST AT THE HIGHEST LAWFUL RATE UNTIL REPAID, NOT TO EXCEED 1 1/2% PER MONTH

CORRESPONDENCE ADDRESS : P.O. BOX 3108 • PORTLAND • OREGON • 97208 PHONE: (503) 285-7557

NWMAR128193

956

NORTH WEST MARINE INC.

MAIL PAYMENT TO: P.O. BOX 4000-58 • PORTLAND • OREGON • 97208

INVOICE

M/V "NORTWEEN SLEVIC" and Owners
c/o First Ocean Marine
2055 Woodside Drive
Redwood City, Washington 94061

DATE	4/4/90
OUR JOB NO.	4232
CUSTOMER'S ORDER NO.	
CONTRACT NO.	
INVOICE NO.	4232-1
TERMS	Net

CUSTOMER CODE NUMBER:

Duns No. 00-902-8580

M/V "NORTWEEN SLEVIC"

Furnished labor, material and equipment to accomplish work in accordance with the attached specification.

Total Amount Due This Invoice $33,644.60

FINAL
Calley
Net

ENTERED APR 6 1990

PAST DUE PAYMENTS SHALL BEAR INTEREST AT THE HIGHEST LAWFUL RATE UNTIL REPAID, NOT TO EXCEED 1 1/2% PER MONTH

CORRESPONDENCE ADDRESS : P.O. BOX 3108 • PORTLAND • OREGON • 97208 PHONE: (503) 285-7557

NWMAR128194

257

MAIL PAYMENT TO: P.O. BOX 4000-58 • PORTLAND • OREGON • 97208

NORTH WEST MARINE INC.

INVOICE

Chantiers De L'Atlantique
Alshom-Atlantique
B.P. 400-44608
St. Nazaire, Cedex
FRANCE

DATE	3/1/90
OUR JOB NO.	3110
CUSTOMER'S ORDER NO.	
CONTRACT NO.	3110-39
INVOICE NO.	Net
TERMS	

CUSTOMER CODE NUMBER:

Duns No. 00-902-8580

Warehouse charges for the main engine generator step-up gears, Ex-NOORDAM and NIEUW AMSTERDAM.

Total Amount Due This Invoice $1,500.00

Pay to Al Calley

Net

ENTERED APR 6 1990

PAST DUE PAYMENTS SHALL BEAR INTEREST AT THE HIGHEST LAWFUL RATE UNTIL REPAID, NOT TO EXCEED 1 1/2% PER MONTH

CORRESPONDENCE ADDRESS : P.O. BOX 3108 • PORTLAND • OREGON • 97208 PHONE: (503) 285-7557

NWMAR128195

758

NORTH WEST MARINE INC.

MAIL PAYMENT TO: P.O. BOX 4000-58 • PORTLAND • OREGON • 97208

INVOICE

Chantiers De L'Atlantique
Alshom-Atlantique
B.P. 400-44608
St. Nazaire, Cedex
FRANCE

DATE	4/1/90
OUR JOB NO.	3110
CUSTOMER'S ORDER NO.	
CONTRACT NO.	
INVOICE NO.	3110-40
TERMS	Net

CUSTOMER CODE NUMBER:

Duns No. 00-902-8580

Warehouse charges for the main engine generator step-up gears, Ex-NOORDAM and NIEUW AMSTERDAM.

Total Amount Due This Invoice $1,500.00

Partial Calley Net

ENTERED APR 6 1990

PAST DUE PAYMENTS SHALL BEAR INTEREST AT THE HIGHEST LAWFUL RATE UNTIL REPAID, NOT TO EXCEED 1 1/2% PER MONTH

CORRESPONDENCE ADDRESS : P.O. BOX 3108 • PORTLAND • OREGON • 97208 PHONE: (503) 285-7557

NWMAR128196

759

MAIL PAYMENT TO: P.O. BOX 4000-58 • PORTLAND • OREGON • 97208

NORTH WEST MARINE INC.

INVOICE

M/V "HYUNDAI NO 16" and Owners
c/o Sunrise Shipping Agency, Inc.
1515 S.W. 5th Avenue, 1050
Portland, Oregon 97201

DATE	4/4/90
OUR JOB NO.	4235
CUSTOMER'S ORDER NO.	
CONTRACT NO.	
INVOICE NO.	4235-1
TERMS	Net

CUSTOMER CODE NUMBER:

Duns No. 00-902-8580

M/V "HYUNDAI NO 16"

Furnished labor, material and equipment to accomplish work in accordance with the attached specification.

Total Amount Due This Invoice $8,689.00

FINAL
Calley
Net

ENTERED APR 6 1990

PAST DUE PAYMENTS SHALL BEAR INTEREST AT THE HIGHEST LAWFUL RATE UNTIL REPAID, NOT TO EXCEED 1 1/2% PER MONTH

CORRESPONDENCE ADDRESS : P.O. BOX 3108 • PORTLAND • OREGON • 97208 PHONE: (503) 285-7557

NWMAR128197

760

MAIL PAYMENT TO: P.O. BOX 4000-58 • PORTLAND • OREGON • 97208

NORTH WEST MARINE INC.

INVOICE

M/V "KEN SPANKER" and Owners
c/o Matson Agencies, Inc.
2020 S.W. 4th, Suite 950
Portland, Oregon 97201

DATE	4/4/90
OUR JOB NO.	4231
CUSTOMER'S ORDER NO.	
CONTRACT NO.	4231-1
INVOICE NO.	Net
TERMS	

CUSTOMER CODE NUMBER:

Duns No. 00-902-8580

M/V "KEN SPANKER"

Furnished labor, material and equipment to accomplish work in accordance with the attached specification.

Total Amount Due This Invoice $13,805.00

Final
Calley
Net

ENTERED APR 6 1990

PAST DUE PAYMENTS SHALL BEAR INTEREST AT THE HIGHEST LAWFUL RATE UNTIL REPAID, NOT TO EXCEED 1 1/2% PER MONTH

CORRESPONDENCE ADDRESS : P.O. BOX 3108 • PORTLAND • OREGON • 97208 PHONE: (503) 285-7557

NWMAR128198

76

MAIL PAYMENT TO: P.O. BOX 4000-58 • PORTLAND • OREGON • 97208

NORTH WEST MARINE INC.

INVOICE

M/V "NOPAL CHERRY" and Owners
c/o Merit Steamship Company
101 S.W. Main, Suite 1060
Portland, Oregon 97204

DATE	4/4/90
OUR JOB NO.	4236
CUSTOMER'S ORDER NO.	
CONTRACT NO.	
INVOICE NO.	4236-1
TERMS	Net

CUSTOMER CODE NUMBER:

Duns No. 00-902-8580

M/V "NOPAL CHERRY"

Furnished labor, material and equipment to accomplish work in accordance with the attached specification.

Total Amount Due This Invoice $1,565.00

FINAL
Call by
Net

ENTERED APR 6 1990

PAST DUE PAYMENTS SHALL BEAR INTEREST AT THE HIGHEST LAWFUL RATE UNTIL REPAID, NOT TO EXCEED 1 1/2% PER MONTH

CORRESPONDENCE ADDRESS : P.O. BOX 3108 • PORTLAND • OREGON • 97208 PHONE: (503) 285-7557

NWMAR128199

MAIL PAYMENT TO: P.O. BOX 4000-58 • PORTLAND • OREGON • 97208

NORTH WEST MARINE INC.

INVOICE

M/V "NORTWEEN SLEVIC" and Owners
c/o First Ocean Marine
2055 Woodside Drive
Redwood City, Washington 94061

DATE	4/13/90
OUR JOB NO.	4232
CUSTOMER'S ORDER NO.	
CONTRACT NO.	1044.02
INVOICE NO.	Credit
TERMS	

CUSTOMER CODE NUMBER:

Duns No. 00-902-8580

M/V "NORTWEEN SLEVIC"

To cancel invoice 1044.01 in its entirety

Total Credit Due This Invoice $(33,644.60)

ENTERED APR 27 1990

PAST DUE PAYMENTS SHALL BEAR INTEREST AT THE HIGHEST LAWFUL RATE UNTIL REPAID, NOT TO EXCEED 1 1/2% PER MONTH

CORRESPONDENCE ADDRESS : P.O. BOX 3108 • PORTLAND • OREGON • 97208 PHONE: (503) 285-7557

NWMAR128200

MAIL PAYMENT TO: P.O. BOX 4000-58 • PORTLAND • OREGON • 97208

NORTH WEST MARINE INC.

INVOICE

M/V "NORTWEEN SLEVIC" and Owners
c/o Karlander Shipping Service
Drammensvelen 65 0271
Oslo 2, Norway

DATE	4/13/90
OUR JOB NO.	4232
CUSTOMER'S ORDER NO.	
CONTRACT NO.	1045.03
INVOICE NO.	
TERMS	Net 15 days

CUSTOMER CODE NUMBER:

Duns No. 00-902-8580

M/V "NORTWEEN SLEVIC"

Furnished labor, material and equipment to accomlish work in accordance with the attached specification.

Total Amount Due This Invoice $33,644.60

Please make wire transfer of funds to:

Southwest Marine, Inc.
c/o Northwest Marine, Inc.
First Interstate Bank of Oregon
N.W. 29th and Yeon Branch
P.O. Box 10172
Portland, Oregon 97210

Account No. 552-001522-9
ABA #123-000123

ENTERED APR 27 1990

PAST DUE PAYMENTS SHALL BEAR INTEREST AT THE HIGHEST LAWFUL RATE UNTIL REPAID, NOT TO EXCEED 1 1/2% PER MONTH

CORRESPONDENCE ADDRESS : P.O. BOX 3108 • PORTLAND • OREGON • 97208 PHONE: (503) 285-7557

Susan Davis

MAIL PAYMENT TO: P.O. BOX 4000-58 • PORTLAND • OREGON • 97208

NORTH WEST MARINE INC.

INVOICE

S/S "BERMUDA STAR" and Owners
c/o Bermuda Star Line
11086 Teaneck Road
Teaneck, New Jersey 07666

DATE	4/24/90
OUR JOB NO.	4906
CUSTOMER'S ORDER NO.	
CONTRACT NO.	
INVOICE NO.	1058.11
TERMS	Net 30 days

CUSTOMER CODE NUMBER:

Duns No. 00-902-8580

For costs erroneously charged to Job 4911 - "Fire Damages" by Southwest Marine, Inc. invoice number 5076, items 100-01, 100-02, 100-03, 100-04, 100-05, 100-06, and item 100-10, as attached.

Total Amount Due $39,723.08

ENTERED APR 27 1990

PAST DUE PAYMENTS SHALL BEAR INTEREST AT THE HIGHEST LAWFUL RATE UNTIL REPAID, NOT TO EXCEED 1 1/2% PER MONTH

CORRESPONDENCE ADDRESS : P.O. BOX 3108 • PORTLAND • OREGON • 97208 PHONE: (503) 285-7557

NWMAR128202

NORTHWEST MARINE IRON WORKS
INVOICES BY CALLEY

MONTH OF March 1990

CUSTOMER	SHIP	INVOICE DATE	INVOICE NUMBER	INVOICE AMOUNT	INVOICE PAYMENT DATE	COMMISSION PERCENT	COMMISSION AMOUNT	COMMISSION DATE PAID	COMMISSION CHECK NUMBER
Intl Marine Transport	Frinton	3/15/90	422701	4,596.00	5/21/90	10%	459.60	5/31/90	2135

714

NORTHWEST MARINE IRON WORKS

SHIP REPAIRERS
GENERAL MACHINE WORK
ENGINEERING

MAIL PAYMENT TO:
P.O. BOX 4000-58
PORTLAND, OREGON 97208

INVOICE

M/V "FRINTON" and Owners
c/o International Marine Transport
1999 Harrison Street, Suite 930
Oakland, CA 97612

DATE 3/15/90
OUR JOB NO. 4227
CUSTOMER'S ORDER NO.
CONTRACT NO.
INVOICE NO. 4227-1
TERMS Net

CUSTOMER CODE NUMBER:

Duns No. 00-902-8580

M/V "FRINTON"

Furnished labor, material and equipment to accomplish repairs in accordance with the attached specifications.

Total Amount Due This Invoice $4,596.00

FINAL
CALLEY
NET

ENTERED MAR 19 1990

PAST DUE PAYMENTS SHALL BEAR INTEREST AT THE HIGHEST LAWFUL RATE UNTIL REPAID, NOT TO EXCEED 1½% PER MONTH.

CORRESPONDENCE ADDRESS P.O. BOX 3109 PORTLAND, OREGON 97208 PHONE (503) 285-7557

NWMAR128204

NORTHWEST MARINE IRON WORKS
INVOICES BY CALLEY

MONTH OF February 1990

CUSTOMER	SHIP	INVOICE DATE	INVOICE NUMBER	INVOICE AMOUNT	INVOICE PAYMENT DATE	COMMISSION PERCENT	COMMISSION AMOUNT	COMMISSION DATE PAID	COMMISSION CHECK NUMBER
CLE Group	Rotterdam	2/1/90	4904-18	282,094.00		Rotterdam		2/12/90	2118
Holland America	Rotterdam	2/1/90	4915-1	317.00		10%	31.70	3/16/90	2123
Chantiers Del'Atlantique		2/1/90	3110-38	1,500.00	3/19/90	10%	150.00	4/4/90	2127
Norton, Lilly	Seakittie	2/7/90	4221-2	2,287.00	2/16/90	10%	228.70	2/22/90	2120
"	"	"	4221-1	225,955.00	2/16/90	10%	22,595.50	2/22/90	2120
HAL	Rotterdam	2/9/90	4912-4	59,500.00		Rotterdam	4912	3/16/90	2123
Fujiki	Toyofuji	2/22/90	4224-1	2,800.00	4/9/90	10%	280.00	4/24/90	2129
BSL	Bermuda Star	2/28/90	4906-8	3,939.03		Bermuda Star		3/1/90	2121
BSL	Bermuda Star	2/28/90	4906-9	Do Not Enter		Bermuda Star			
BSL	Bermuda Star	2/28/90	4906-10	Do Not Enter		Bermuda Star			
BSL	Bermuda Star	2/28/90	4906-95	(455,530.00)		Bermuda Star			
	Constitution						118,138.60	4/27/90	2137

NWMAR128205

6 32

NORTHWEST MARINE IRON WORKS

SHIP REPAIRERS
GENERAL MACHINE WORK
ENGINEERING

MAIL PAYMENT TO:
P.O. BOX 4000-58
PORTLAND, OREGON 97208

INVOICE

CLC GROUP LTD.
Vincent Avenue
Southampton SO1 6PO
United Kingdom

DATE February 1, 1990
OUR JOB NO. 4904
CUSTOMER'S ORDER NO.
CONTRACT NO.
INVOICE NO. 4904-18
TERMS Net on Receipt of Invoice

CUSTOMER CODE NUMBER:

Duns No. 00-902-8580

S/S "ROTTERDAM"

Furnished labor and materials to assist CLC as requested, during the modernization of the SS "ROTTERDAM" in accordance with documents previously submitted on October 26, 1989.

Labor:	5899 Straight Time @ $33.00	$194,667.00
	2880 Premium Time @ $18.00	51,840.00
Materials:	$17,718.00 @ 1.15	20,375.00
		$266,882.00
Port of Portland User and Rehab Fee	5.7%	15,212.00
Total Amount Due This Invoice		$282,094.00

Partial
Calley
Net

ENTERED FEB 05 1990

PAST DUE PAYMENTS SHALL BEAR INTEREST AT THE HIGHEST LAWFUL RATE UNTIL REPAID, NOT TO EXCEED 1½% PER MONTH.

CORRESPONDENCE ADDRESS P.O. BOX 3109 PORTLAND, OREGON 97208 PHONE (503) 285-7557

NWMAR128206

633

NORTHWEST MARINE IRON WORKS

SHIP REPAIRERS
GENERAL MACHINE WORK
ENGINEERING

MAIL PAYMENT TO:
P.O. BOX 4000-58
PORTLAND, OREGON 97208

INVOICE

S/S ROTTERDAM
c/o Holland America Lines
300 Elliott Avenue West
Seattle, Washington

DATE February 1, 1990
OUR JOB NO. 4915
CUSTOMER'S ORDER NO.
CONTRACT NO.
INVOICE NO. 4915-1
TERMS Net

CUSTOMER CODE NUMBER:

Duns No. 00-902-8580

S/S "ROTTERDAM"

Furnished labor and materials to ship materials in accordance with the attached specification.

Labor:	$114.00
Transportation:	203.00
Total Amount Due This Invoice	$317.00

Final
Calley
Net

ENTERED FEB 05 1990

PAST DUE PAYMENTS SHALL BEAR INTEREST AT THE HIGHEST LAWFUL RATE UNTIL REPAID, NOT TO EXCEED 1½% PER MONTH.

CORRESPONDENCE ADDRESS P.O. BOX 3109 PORTLAND, OREGON 97208 PHONE (503) 285-7557

NWMAR128207

639

NORTHWEST MARINE IRON WORKS

SHIP REPAIRERS
GENERAL MACHINE WORK
ENGINEERING

MAIL PAYMENT TO:
P.O. BOX 4000-58
PORTLAND, OREGON 97208

INVOICE

Chantiers De L'Atlantique
Alshom-Atlantique
B.P. 400-44608
St. Nazaire, Cedex
FRANCE

DATE February 1, 1990
OUR JOB NO. 3110
CUSTOMER'S ORDER NO.
CONTRACT NO. 3110-38
INVOICE NO.
TERMS Net

CUSTOMER CODE NUMBER:

Duns No. 00-902-8580

Warehouse charges for the main engine generator step-up gears, Ex-NOORDAM and NIEUW AMSTERDAM

Charges for the month of February, 1990

Total Amount Due This Invoice $1,500.00

PARTIAL
CALLAY
NET

ENTERED FEB 12 1990

PAST DUE PAYMENTS SHALL BI NTEREST AT THE HIGHEST LAWFUL RATE UNTIL REP NOT TO EXCEED 1½% PER MONTH.

CORRESPONDENCE ADDRESS P.O. BOX 3109 PORTLAND, OREGON 97208 PHONE (503) 285-7557

NWMAR128208

6 Y0

NORTHWEST MARINE IRON WORKS

SHIP REPAIRERS
GENERAL MACHINE WORK
ENGINEERING

MAIL PAYMENT TO:
P.O. BOX 4000-58
PORTLAND, OREGON 97208

INVOICE

M/V "SEAKITTIE"
c/o Norton, Lilly and Company
200 Market Place, Suite 860
Portland, Oregon 97201

DATE February 7, 1990
OUR JOB NO. 4221
CUSTOMER'S ORDER NO.
CONTRACT NO. 4221-2
INVOICE NO. Net
TERMS

CUSTOMER CODE NUMBER:

Duns No. 00-902-8580

M/V "SEAKITTIE"

Furnished labor, material and equipment to accomplish repairs in accordance with the attached specifications.

Total Amount Due This Invoice $2,287.00

Paid
Colley
Net

ENTERED FEB 12 1990

PAST DUE PAYMENTS SHALL E INTEREST AT THE HIGHEST LAWFUL RATE UNTIL REF NOT TO EXCEED 1½% PER MONTH.

CORRESPONDENCE ADDRESS P.O. BOX 3109 PORTLAND, OREGON 97208 PHONE (503) 285-7557

NWMAR128209

641

NORTHWEST MARINE IRON WORKS

SHIP REPAIRERS
GENERAL MACHINE WORK
ENGINEERING

MAIL PAYMENT TO:
P.O. BOX 4000-58
PORTLAND, OREGON 97208

INVOICE

M/V "SEAKITTIE"
c/o Norton, Lilly and Company
200 Market Place, Suite 860
Portland, Oregon 97201

DATE February 7, 1990
OUR JOB NO. 4221
CUSTOMER'S ORDER NO.
CONTRACT NO. 4221-1
INVOICE NO.
TERMS Net

CUSTOMER CODE NUMBER:

Duns No. 00-902-8580

M/V "SEAKITTIE"

Furnished labor, material and equipment to accomplish repairs in accordance with the attached specifications.

Total Amount Due This Invoice $225,955.00

Mr. C.C. Chan

Mr. John Murdoch
for cost of repair only

FINAL
CA/lcy
Nev

ENTERED FEB 12 1990

PAST DUE PAYMENTS SHALL BEAR INTEREST AT THE HIGHEST LAWFUL RATE UNTIL REPAID, NOT TO EXCEED 1½% PER MONTH.

CORRESPONDENCE ADDRESS P.O. BOX 3109 PORTLAND, OREGON 97208 PHONE (503) 285-7557

NWMAR128210

6 1/2

NORTHWEST MARINE IRON WORKS

SHIP REPAIRERS
GENERAL MACHINE WORK
ENGINEERING

MAIL PAYMENT TO:
P.O. BOX 4000-58
PORTLAND, OREGON 97208

INVOICE

S/S "ROTTERDAM" and Owners
c/o Holland America Lines
300 Elliott Avenue West
Seattle, Washington 98119

DATE February 9, 1990
OUR JOB NO. 4912
CUSTOMER'S ORDER NO.
CONTRACT NO.
INVOICE NO. 4912-4
TERMS Net

CUSTOMER CODE NUMBER:

Duns No. 00-902-8580

S/S "ROTTERDAM"
IN-HOUSE

Furnished transportation to transport
propeller to Newport News, Virginia

Total Amount Due This Invoice $59,500.00

Calley
Net

ENTERED FEB 12 1990

PAST DUE PAYMENTS SHALL BE ITEREST AT THE HIGHEST LAWFUL RATE UNTIL REP. OT TO EXCEED 1½% PER MONTH.

CORRESPONDENCE ADDRESS P.O. BOX 3109 PORTLAND, OREGON 97208 PHONE (503) 285-7557

NWMAR128211

666

NORTHWEST MARINE IRON WORKS

SHIP REPAIRERS
GENERAL MACHINE WORK
ENGINEERING

MAIL PAYMENT TO:
P.O. BOX 4000-58
PORTLAND, OREGON 97208

INVOICE

M/V "TOYOFUJI #7" and Owners
c/o Fujiki U.S.A. Inc.
1500 S.W. First Avenue, Suite 870
Portland, Oregon 97201

DATE February 22 1990
OUR JOB NO. 4224
CUSTOMER'S ORDER NO.
CONTRACT NO. 4224-1
INVOICE NO.
TERMS Net

CUSTOMER CODE NUMBER:

Duns No. 00-902-8580

M/V "TOYOFUJI #7"

Furnished labor, equipment and material to accomplish work in accordance with attached specifications.

Total Amount Due This Invoice $2,800.00

FINAL
Called
Net

ENTERED FEB 26 1990

PAST DUE PAYMENTS SHALL BEAR INTEREST AT THE HIGHEST LAWFUL RATE UNTIL REPAID, NOT TO EXCEED 1½% PER MONTH.

CORRESPONDENCE ADDRESS P.O. BOX 3109 PORTLAND, OREGON 97208 PHONE (503) 285-7557

NWMAR128212

690

NORTHWEST MARINE IRON WORKS

SHIP REPAIRERS
GENERAL MACHINE WORK
ENGINEERING

MAIL PAYMENT TO:
P.O. BOX 4000-58
PORTLAND, OREGON 97208

INVOICE

Bermuda Star Line
11086 Teaneck Road
Teaneck, NJ 07666

Attention: Mr. James Canty

CUSTOMER CODE NUMBER:

DATE	2/28/90
OUR JOB NO.	4906
CUSTOMER'S ORDER NO.	
CONTRACT NO.	
INVOICE NO.	4906-8
TERMS	Net 30

Duns No. 00-902-8580

SS "BERMUDA STAR"

Expenses incurred during final negotiations held in offices of B.S.L. as requested.

Air Transportation:

A.	Original fare - Portland - Tampa - Portland	$1,659.00
B.	Fare as used	4,683.00
	Total Air Transportation Fare	$3,024.00

Increase is due to late cancellation of original reservations as well as no advance booking privileges.

Hotel Expenses (Howard Johnson)	$ 778.28
Taxi Fares	$ 136.75
Total Amount Due This Invoice	$3,939.03

Partial Calley Nev

PAST DUE PAYMENTS SHALL BEAR INTEREST AT THE HIGHEST LAWFUL RATE UNTIL REPAID, NOT TO EXCEED 1½% PER MONTH.

CORRESPONDENCE ADDRESS P.O. BOX 3109 PORTLAND, OREGON 97208 PHONE (503) 285-7557

NWMAR128213

691

NORTHWEST MARINE IRON WORKS

SHIP REPAIRERS
GENERAL MACHINE WORK
ENGINEERING

MAIL PAYMENT TO:
P.O. BOX 4000-58
PORTLAND, OREGON 97208

INVOICE

SS "BERMUDA STAR" and Owners
c/o Bermuda Star Line
11086 Teaneck Road
Teaneck, NJ 07666

DATE 2/28/90
OUR JOB NO. 4906
CUSTOMER'S ORDER NO.
CONTRACT NO.
INVOICE NO. 4906-9
TERMS Credit

CUSTOMER CODE NUMBER:

Duns No. 00-902-8580

SS "BERMUDA STAR"

To cancel invoice number 4906-6, issued on January 5, 1990 in entirety.

Credit ($473,005.00)

Partial Calley Not

Do Not Enter

PAST DUE PAYMENTS SHALL BEAR INTEREST AT THE HIGHEST LAWFUL RATE UNTIL REPAID, NOT TO EXCEED 1½% PER MONTH.

CORRESPONDENCE ADDRESS P.O. BOX 3109 PORTLAND, OREGON 97208 PHONE (503) 285-7557

NWMAR128214

692

NORTHWEST MARINE IRON WORKS

SHIP REPAIRERS
GENERAL MACHINE WORK
ENGINEERING

MAIL PAYMENT TO:
P.O. BOX 4000-58
PORTLAND, OREGON 97208

INVOICE

SS "BERMUDA STAR" and Owners
c/o Bermuda Star Line
11086 Teaneck Road
Teaneck, NJ 07666

CUSTOMER CODE NUMBER:

DATE	
OUR JOB NO.	2/28/90
CUSTOMER'S ORDER NO.	4906
CONTRACT NO.	
INVOICE NO.	
TERMS	4906-10 Net

Duns No. 00-902-8580

SS "BERMUDA STAR"

For furnishing labor, material and equipment to accomplish repairs to damages in accordance with the attached specifications.

Total Amount Due This Invoice $466,384.00

Do Not Enter

Partial Calley Net

PAST DUE PAYMENTS SHALL BEAR INTEREST AT THE HIGHEST LAWFUL RATE UNTIL REPAID, NOT TO EXCEED 1½% PER MONTH.

CORRESPONDENCE ADDRESS P.O. BOX 3109 PORTLAND, OREGON 97208 PHONE (503) 285-7557

NWMAR128215

A DIVISION OF SOUTHWEST MARINE, INC.
P.O. Box 3109 • Portland • Oregon • 97208 • 5555 N. Channel Ave. • Bldg 2 • Portland • Oregon • 97217
(503) 285-7557 • TWX: 910-464-6107 NORMARINE PTL • FAX: (503) 240-6600

NORTH WEST MARINE INC.

CREDIT MEMO

2/28/90

Bermuda Star Lines

INV # 4906-95

Apply to 4906-09

Correct credits on Progress Billing	90.00
Allowance on Invoices Previously Submitted	290,000.00
Credit For Fire Related Work	40,000.00
Credit For CLC Living Expenses	125,440.00

C.M.

TOTAL AMOUNT THIS CREDIT MEMO: (455530.00)

NORTHWEST MARINE IRON WORKS
INVOICES BY CALLEY

MONTH OF January 1990

Pg 1 of 2

CUSTOMER	SHIP	INVOICE DATE	INVOICE NUMBER	INVOICE AMOUNT	INVOICE PAYMENT DATE	COMMISSION PERCENT	COMMISSION AMOUNT	COMMISSION DATE PAID	COMMISSION CHECK NUMBER
Jones Oregon Stevedoring	Bunga Kenanga	1/3/90	4201-1	5,947.00	1/29/90	10%	594.70	2/8/90	2117
Chartiers de l'Atlantique		1/5/90	3110-37	1,500.00	3/3/90	10%	150.00	4/4/90	2127
BSL Cruises	Bermuda Star	1/5/90	4906-6	473,005.00		Bermuda Star		3/1/90	2121
BSL Cruises	Bermuda Star	1/5/90	4906-7	268,041.65		Bermuda Star		3/1/90	2121
Central Gulf Lines	Greenbay	1/9/90	4202-1	2,456.00	2/13/90	10%	245.60	2/22/90	2120
Natl Sanitation	Bermuda Star	1/9/90	4195-1	3,246.00		10%	324.60		
Holland America	Rotterdam	1/9/90	4912-1	83,860.00		Rotterdam	(4912)	3/16/90	2123
BS Line, Inc	Bermuda Star	1/12/90	4914-1	1,555.00		Bermuda Star		3/1/90	2121
BS Line	Bermuda Star	1/12/90	4911-1	3,398,917.00		Bermuda Star		3/1/90	2121
BS Line	Bermuda Star	1/12/90	4906-8	2,023,968.00		Bermuda Star		3/1/90	2121
BS Line	Bermuda Star	1/12/90	4906-9	3,134,903.00		Bermuda Star		3/1/90	2121
Holland America	Rotterdam	1/15/90	4912-2	<83,860.00>		Rotterdam	(4912)	3/16/90	2123
Holland America	Rotterdam	1/15/90	4912-3	24,360.00		Rotterdam	(4912)	3/16/90	2123
CLC Group	Bermuda Star	1/15/90	4194-1	37,481.00		10%	3,748.00		
~~Shaver Transp~~	~~Reg Portland~~	~~1/15/90~~	~~4910-1~~	~~29,900.00~~					
Norton Lilly	Ostrian Express	1/15/90	4207-1	2,181.00	3/5/90	10%	218.00	4/4/90	2127
Cascade Shipping	Pine Trust	1/15/90	4205-1	8,562.00	2/12/90	10%	856.00	2/22/90	2120
Atlantic Marine	Bermuda Star	1/17/90	4213-1	2,429.00		Bermuda Star		3/1/90	2121
General Steamship	Ever Harmony	1/19/90	4211-1	13,503.00	4/9/90	10%	1,350.30	4/24/90	2129
Cascade Shipping	Sanko Robin	1/23/90	4214-1	1,869.00	1/23/90	10%	186.90	4/4/90	2127
Jones Oregon Stevedoring	Ostrain Express	1/23/90	4208-1	1,984.00	2/9/90	10%	198.40	2/22/90	2120
Transversal Outlet	Patricia	1/24/90	4217-1	2,978.00		10%	297.80	8/20/90	2142
Fred Devine	Singa Sun	1/24/90	4212-1	9,126.00	2/15/90	10%	912.60	2/22/90	2120
Barber Steamship	Swiftness	1/25/90	4209-1	610.00	2/23/90	10%	61.00	4/4/90	2127
General Steamship	Ever Harmony	1/25/90	4216-1	924.00	4/09/90	10%	92.40	4/24/90	2129
Holland America	Rotterdam	1/31/90	(4904) 9999-90	<1,978,795.00>		Rotterdam		pd 2/12/90	

NWMAR128217

NORTHWEST MARINE [illegible]
INVOICES BY GALLEY

MONTH OF January 1990

Pg 2 of 2

CUSTOMER	SHIP	INVOICE DATE	INVOICE NUMBER	INVOICE AMOUNT	INVOICE PAYMENT DATE	COMMISSION PERCENT	COMMISSION AMOUNT	DATE PAID	CHECK NUMBER
BSL Cruises	Bermuda Star	1/26/90	4906-96	<1,624,574.35>		Bermuda Star		3/1/90	2121
			4906-97	<2,023,968.00>		Bermuda Star			
			490698	<268,041.65>		Bermuda Star			
			4906-99	<473,005.00>		Bermuda Star			
BSL Cruises	Bermuda Star	1/12/90	4911-98	<3,398,917.00>		Bermuda Star			

NWMAR128218

572

NORTHWEST MARINE IRON WORKS

SHIP REPAIRERS
GENERAL MACHINE WORK
ENGINEERING

MAIL PAYMENT TO:
P.O. BOX 4000-58
PORTLAND, OREGON 97208

INVOICE

M/V "BUNGA KENANGA" and Owners
c/o Jones Oregon Stevedoring Company
2323 N.W. Suffolk Street
Portland, Oregon 97210

DATE January 3, 1990
OUR JOB NO. 4201
CUSTOMER'S ORDER NO.
CONTRACT NO.
INVOICE NO. 4201-1
TERMS Net

CUSTOMER CODE NUMBER:

Duns No. 00-902-8580

M/V "BUNGA KENANGA"

Furnished labor, material and equipment to accomplish repairs in accordance with the attached specifications.

Total Amount Due This Invoice $5,947.00

Final Calley
~~NA~~ Net

ENTERED JAN 8 1990

PAST DUE PAYMENTS SHALL BEAR INTEREST AT THE HIGHEST LAWFUL RATE UNTIL REPAID, NOT TO EXCEED 1½% PER MONTH.

CORRESPONDENCE ADDRESS P.O. BOX 3109 PORTLAND, OREGON 97208 PHONE (503) 285-7557

NWMAR128219

577

NORTHWEST MARINE IRON WORKS

SHIP REPAIRERS
GENERAL MACHINE WORK
ENGINEERING

MAIL PAYMENT TO:
P.O. BOX 4000-58
PORTLAND, OREGON 97208

INVOICE

Chantiers De L'Atlantique
Alshom-Atlantique
B.P. 400-44608
St. Nazaire, Cedex
FRANCE

DATE January 5, 1990
OUR JOB NO. 3110
CUSTOMER'S ORDER NO.
CONTRACT NO.
INVOICE NO. 3110-37
TERMS Net

CUSTOMER CODE NUMBER:

Duns No. 00-902-8580

Warehouse charges for the main engine generator step-up gears, Ex-NOORDAM and NIEUW AMSTERDAM.

Charges for the month of January, 1990

Total Amount Due This Invoice $1,500.00

Partial
Culley
NW

ENTERED JAN 8 1990

PAST DUE PAYMENTS SHALL BEAR INTEREST AT THE HIGHEST LAWFUL RATE UNTIL REPAID, NOT TO EXCEED 1½% PER MONTH.

CORRESPONDENCE ADDRESS P.O. BOX 3109 PORTLAND, OREGON 97208 PHONE (503) 285-7557

NWMAR128220

578

NORTHWEST MARINE IRON WORKS

SHIP REPAIRERS
GENERAL MACHINE WORK
ENGINEERING

MAIL PAYMENT TO:
P.O. BOX 4000-58
PORTLAND, OREGON 97208

INVOICE

S/S "BERMUDA STAR" and Owners
c/o B.S.L. Cruises, Inc.
11086 Teaneck Road
Teaneck, New Jersey 07666

DATE January 5, 1990
OUR JOB NO. 4906
CUSTOMER'S ORDER NO.
CONTRACT NO.
INVOICE NO. 4906-6
TERMS Net

CUSTOMER CODE NUMBER:

Duns No. 00-902-8580

S/S "BERMUDA STAR"

For furnishing labor, material and equipment to accomplish repairs to damages in accordance with the attached specifications.

Total Amount Due This Invoice $473,005.00

Partial
Calley
Net

ENTERED JAN 8 1990

PAST DUE PAYMENTS SHALL BEAR INTEREST AT THE HIGHEST LAWFUL RATE UNTIL REPAID, NOT TO EXCEED 1½% PER MONTH.

CORRESPONDENCE ADDRESS P.O. BOX 3109 PORTLAND, OREGON 97208 PHONE (503) 285-7557

NWMAR128221

579

NORTHWEST MARINE IRON WORKS

SHIP REPAIRERS
GENERAL MACHINE WORK
ENGINEERING

MAIL PAYMENT TO:
P.O. BOX 4000-58
PORTLAND, OREGON 97208

INVOICE

S/S "BERMUDA STAR" and Owners
c/o B.S.L. Cruises, Inc.
11086 Teaneck Road
Teaneck, New Jersey 07666

DATE January 5, 1990
OUR JOB NO. 4906
CUSTOMER'S ORDER NO.
CONTRACT NO.
INVOICE NO. 4906-7
TERMS Net

CUSTOMER CODE NUMBER:

Duns No. 00-902-8580

S/S "BERMUDA STAR"

For furnishing berthage, berthage services and common charges thereto.

Berthage and Berthage Services	$ 91,090.65
Common Charges	$176,951.00
Total Amount Due This Invoice	$268,041.65

Partial
Calley
Net

ENTERED JAN 8 1990

PAST DUE PAYMENTS SHALL BEAR INTEREST AT THE HIGHEST LAWFUL RATE UNTIL REPAID, NOT TO EXCEED 1½% PER MONTH.

CORRESPONDENCE ADDRESS P.O. BOX 3109 PORTLAND, OREGON 97208 PHONE (503) 285-7557

NWMAR128222

581

NORTHWEST MARINE IRON WORKS

SHIP REPAIRERS
GENERAL MACHINE WORK
ENGINEERING

MAIL PAYMENT TO:
P.O. BOX 4000-58
PORTLAND, OREGON 97208

INVOICE

Central Gulf Lines
c/o Williams, Dimond & Co.
200 Market Building, Suite 1480
Portland, OR 97201

CUSTOMER CODE NUMBER:

DATE	January 9, 1990
OUR JOB NO.	4202
CUSTOMER'S ORDER NO.	77206
CONTRACT NO.	
INVOICE NO.	4202-1
TERMS	Net

Duns No. 00-902-8580

M/V "GREENBAY"

For labor, material and equipment in accordance with the attached specification.

Total Amount Due This Invoice $2,456.00

FINAL
Collect
Net

ENTERED JAN 15 1990

PAST DUE PAYMENTS SHALL BEAR INTEREST AT THE HIGHEST LAWFUL RATE UNTIL REPAID, NOT TO EXCEED 1½% PER MONTH.

CORRESPONDENCE ADDRESS P.O. BOX 3109 PORTLAND, OREGON 97208 PHONE (503) 285-7557

NWMAR128223

NORTHWEST MARINE IRON WORKS

582

SHIP REPAIRERS
GENERAL MACHINE WORK
ENGINEERING

MAIL PAYMENT TO:
P.O. BOX 4000-58
PORTLAND, OREGON 97208

INVOICE

National Sanitation Inspection Service
7242 N.W. 66th Street
Miami, Florida 33166

DATE	January 9, 1990
OUR JOB NO.	4195
CUSTOMER'S ORDER NO.	
CONTRACT NO.	
INVOICE NO.	4195-1
TERMS	Net

CUSTOMER CODE NUMBER:

Duns No. 00-902-8580

S/S "BERMUDA STAR"

For labor, material and equipment to accomplish repairs as directed by Mr. E. Solomon fax messages of 6 December 1989 and 15 December 1989.

Labor:	84 1/2 hours @ $38.00	$3,211.00
Material		35.00
	Total Amount Due This Invoice	$3,246.00

Partial
Calley
Net

ENTERED JAN 15 1990

PAST DUE PAYMENTS SHALL BEAR INTEREST AT THE HIGHEST LAWFUL RATE UNTIL REPAID, NOT TO EXCEED 1½% PER MONTH.

CORRESPONDENCE ADDRESS P.O. BOX 3109 PORTLAND, OREGON 97208 PHONE (503) 285-7557

NWMAR128224

584

NORTHWEST MARINE IRON WORKS

SHIP REPAIRERS
GENERAL MACHINE WORK
ENGINEERING

MAIL PAYMENT TO:
P.O. BOX 4000-58
PORTLAND, OREGON 97208

INVOICE

S/S "ROTTERDAM" and Owners
c/o Holland America Lines
300 Elliott Avenue West
Seattle, WA 98119

DATE	January 9, 1990
OUR JOB NO.	4912
CUSTOMER'S ORDER NO.	
CONTRACT NO.	
INVOICE NO.	4912-1
TERMS	Net

CUSTOMER CODE NUMBER:

Duns No. 00-902-8580

S/S "ROTTERDAM"

Furnished labor, material and equipment to accomplish work in accordance with the attached specifications.

Total Amount Due This Invoice $83,860.00

Partial Calley Net

ENTERED JAN 15 1990

PAST DUE PAYMENTS SHALL BEAR INTEREST AT THE HIGHEST LAWFUL RATE UNTIL REPAID, NOT TO EXCEED 1½% PER MONTH.

CORRESPONDENCE ADDRESS P.O. BOX 3109 PORTLAND, OREGON 97208 PHONE (503) 285-7557

NWMAR128225

585

NORTHWEST MARINE IRON WORKS

SHIP REPAIRERS
GENERAL MACHINE WORK
ENGINEERING

MAIL PAYMENT TO:
P.O. BOX 4000-58
PORTLAND, OREGON 97208

INVOICE

Bermuda Star Line, Inc.
11086 Teaneck Road
Teaneck, N.J. 07666

DATE January 12, 1990
OUR JOB NO 4914
CUSTOMER'S ORDER NO. 2200990
CONTRACT NO
INVOICE NO 4914-1
TERMS Net

CUSTOMER CODE NUMBER:

Duns No. 00-902-8580

Furnished labor, freight and custom broker to ship auxiliary circulating pumps per the attached specification.

Labor:	$ 432.00
Freight:	1,038.00
Custom Broker	85.00
Total Amount Due This Invoice	$ 1,555.00

Jim al
Calley
Nor

ENTERED JAN 15 1990

PAST DUE PAYMENTS SHALL BEAR INTEREST AT THE HIGHEST LAWFUL RATE UNTIL REPAID, NOT TO EXCEED 1½% PER MONTH.

CORRESPONDENCE ADDRESS P.O. BOX 3109 PORTLAND, OREGON 97208 PHONE (503) 285-7557

NWMAR128226

586

NORTHWEST MARINE IRON WORKS

SHIP REPAIRERS
GENERAL MACHINE WORK
ENGINEERING

MAIL PAYMENT TO:
P.O. BOX 4000-58
PORTLAND, OREGON 97208

INVOICE

S/S "BERMUDA STAR" and Owners
Bermuda Star Line, Inc.
11086 Teaneck Road
Teaneck, N.J. 07666

DATE January 12, 1990
OUR JOB NO. 4911
CUSTOMER'S ORDER NO.
CONTRACT NO.
INVOICE NO. 4911-1
TERMS Net

CUSTOMER CODE NUMBER:

Duns No. 00-902-8580

S/S "BERMUDA STAR"

For furnishing labor, material and equipment to accomplish repairs to fire damage sustained by ship.

Total Amount Due This Invoice $3,398,917.00

Pastal
Calley
Not

ENTERED JAN 15 1990

PAST DUE PAYMENTS SHALL BEAR INTEREST AT THE HIGHEST LAWFUL RATE UNTIL REPAID, NOT TO EXCEED 1½% PER MONTH.

CORRESPONDENCE ADDRESS P.O. BOX 3109 PORTLAND, OREGON 97208 PHONE (503) 285-7557

NWMAR128227

587

NORTHWEST MARINE IRON WORKS

SHIP REPAIRERS
GENERAL MACHINE WORK
ENGINEERING

MAIL PAYMENT TO:
P.O. BOX 4000-58
PORTLAND, OREGON 97208

INVOICE

S/S "BERMUDA STAR" and Owners
Bermuda Star Line, Inc.
11086 Teaneck Road
Teaneck, N.J. 07666

DATE January 12, 1990
OUR JOB NO. 4906
CUSTOMER'S ORDER NO.
CONTRACT NO.
INVOICE NO. 4906-8
TERMS Net

CUSTOMER CODE NUMBER:

Duns No. 00-902-8580

S/S "BERMUDA STAR"

For furnishing labor, material and equipment to accomplish repairs in accordance with the attached specifications Items 0001 through 0088.

Total Amount Due This Invoice $2,023,968.00

Barbara Colley
Mr

ENTERED JAN 15 1990

PAST DUE PAYMENTS SHALL BEAR INTEREST AT THE HIGHEST LAWFUL RATE UNTIL REPAID, NOT TO EXCEED 1½% PER MONTH.

CORRESPONDENCE ADDRESS P.O. BOX 3109 PORTLAND, OREGON 97208 PHONE (503) 285-7557

NWMAR128228

588

NORTHWEST MARINE IRON WORKS

SHIP REPAIRERS
GENERAL MACHINE WORK
ENGINEERING

MAIL PAYMENT TO:
P.O. BOX 4000-58
PORTLAND, OREGON 97208

INVOICE

S/S "BERMUDA STAR" and Owners
Bermuda Star Line, Inc.
11086 Teaneck Road
Teaneck, N.J. 07666

DATE	January 12, 1990
OUR JOB NO.	4906
CUSTOMER'S ORDER NO.	
CONTRACT NO.	4906-9
INVOICE NO.	Net
TERMS	

CUSTOMER CODE NUMBER:

Duns No. 00-902-8580

S/S "BERMUDA STAR"

For furnishing labor, material and equipment to accomplish repairs in accordance with the attached specifications Items 0301 through 0330

Quoted Price:	$2,659,048.00
Additions:	617,108.00
Credits:	(141,253.00)
Total Amount Due This Invoice	$3,134,903.00

Partial
Calley
Net

ENTERED JAN 15 1990

PAST DUE PAYMENTS SHALL BEAR INTEREST AT THE HIGHEST LAWFUL RATE UNTIL REPAID, NOT TO EXCEED 1½% PER MONTH.

CORRESPONDENCE ADDRESS P.O. BOX 3109 PORTLAND, OREGON 97208 PHONE (503) 285-7557

NWMAR128229

593

NORTHWEST MARINE IRON WORKS

SHIP REPAIRERS
GENERAL MACHINE WORK
ENGINEERING

MAIL PAYMENT TO:
P.O. BOX 4000-58
PORTLAND, OREGON 97208

INVOICE

S/S "ROTTERDAM" and Owners
c/o Holland America Lines
300 Elliott Avenue West
Seattle, WA 98119

DATE January 15, 1990
OUR JOB NO. 4912
CUSTOMER'S ORDER NO.
CONTRACT NO. 4912-2
INVOICE NO. Credit
TERMS

CUSTOMER CODE NUMBER:

Duns No. 00-902-8580

S/S "ROTTERDAM"

To cancel invoice number 4912-1 in its entirety.	($83,860.00)
Total Credit Due	($83,860.00)

Partial Calley Nev

ENTERED JAN 22 1990

PAST DUE PAYMENTS SHALL BEAR INTEREST AT THE HIGHEST LAWFUL RATE UNTIL REPAID, NOT TO EXCEED 1½% PER MONTH.

CORRESPONDENCE ADDRESS P.O. BOX 3109 PORTLAND, OREGON 97208 PHONE (503) 285-7557

NWMAR128230

NORTHWEST MARINE IRON WORKS

594

SHIP REPAIRERS
GENERAL MACHINE WORK
ENGINEERING

MAIL PAYMENT TO:
P.O. BOX 4000-58
PORTLAND, OREGON 97208

INVOICE

S/S "ROTTERDAM" and Owners
c/o Holland America Lines
300 Elliott Avenue West
Seattle, WA 98119

DATE: January 15, 1990
OUR JOB NO.: 4912
CUSTOMER'S ORDER NO.:
CONTRACT NO.: 4912-3
INVOICE NO.: Net
TERMS:

CUSTOMER CODE NUMBER:

Duns No. 00-902-8580

S/S "ROTTERDAM"

For furnishing labor, material and equipment to accomplish work in accordance with attached specifications.

(Support documents previously submitted.)

Total Cost	$83,860.00
Less Progress Billing 1/4/90	($59,500.00)
Total Amount Due This Invoice	$24,360.00

Partial
Called
Net

ENTERED JAN 22 1990

PAST DUE PAYMENTS SHALL BEAR INTEREST AT THE HIGHEST LAWFUL RATE UNTIL REPAID, NOT TO EXCEED 1½% PER MONTH.

CORRESPONDENCE ADDRESS P.O. BOX 3109 PORTLAND, OREGON 97208 PHONE (503) 285-7557

NWMAR128231

595

NORTHWEST MARINE IRON WORKS

SHIP REPAIRERS
GENERAL MACHINE WORK
ENGINEERING

MAIL PAYMENT TO:
P.O. BOX 4000-58
PORTLAND, OREGON 97208

INVOICE

C.L.C. Group, Ltd.
Vincent Avenue
Southampton, SO1 6PQ
United Kingdom

Attention: Mr. W. Childerstone
President

CUSTOMER CODE NUMBER:

DATE: January 15, 1990
OUR JOB NO.: 4194
CUSTOMER'S ORDER NO.:
CONTRACT NO.: 4194-1
INVOICE NO.:
TERMS: Net on Receipt of Invoice

Duns No. 00-902-8580

S/S "BERMUDA STAR"

For furnishing labor and material to assist sub-contractor during vessel's repair/modification availability December, 1989/January 1990.
(Support documents previously submitted.)

	Labor:	835 S.T. @$36.00	$30,060.00
(#326)	Labor:	16 S.T. @$36.00	576.00
	Material:		4,825.00
			$35,461.00
	Port of Portland (5.7%)		2,021.00
	Total Amount Due This Invoice		$37,481.00

Partial
Calley
Net

ENTERED JAN 22 1990

PAST DUE PAYMENTS SHALL BEAR INTEREST AT THE HIGHEST LAWFUL RATE UNTIL REPAID, NOT TO EXCEED 1½% PER MONTH.

CORRESPONDENCE ADDRESS P.O. BOX 3109 PORTLAND, OREGON 97208 PHONE (503) 285-7557

NWMAR128232

NORTHWEST MARINE IRON WORKS

586

SHIP REPAIRERS
GENERAL MACHINE WORK
ENGINEERING

MAIL PAYMENT TO:
P.O. BOX 4000-58
PORTLAND, OREGON 97208

INVOICE

Tug "PORTLAND" and Owners
c/o Shaver Transportation
4900 N.W. Front
Portland, Oregon 97210

DATE January 15, 1990
OUR JOB NO. 4190
CUSTOMER'S ORDER NO.
CONTRACT NO.
INVOICE NO. 4190-1
TERMS Net

CUSTOMER CODE NUMBER:

Duns No. 00-902-8580

TUG "PORTLAND"

For furnishing labor, material and equipment to accomplish repairs in accordance with the attached specifications.

Total Amount Due This Invoice $29,400.71

Partial
Calley
Net

ENTERED JAN 22 1990

PAST DUE PAYMENTS SHALL BEAR INTEREST AT THE HIGHEST LAWFUL RATE UNTIL REPAID, NOT TO EXCEED 1½% PER MONTH.

CORRESPONDENCE ADDRESS P.O. BOX 3109 PORTLAND, OREGON 97208 PHONE (503) 285-7557

NWMAR128233

597

NORTHWEST MARINE IRON WORKS

SHIP REPAIRERS
GENERAL MACHINE WORK
ENGINEERING

MAIL PAYMENT TO:
P.O. BOX 4000-58
PORTLAND, OREGON 97208

INVOICE

M/V "ISTRIAN EXPRESS" and Owners
c/o Norton Lilly and Company
900 West Street
New York, NY 10006

DATE: January 15, 1990
OUR JOB NO.: 4207
CUSTOMER'S ORDER NO.: 4207-1
CONTRACT NO.:
INVOICE NO.: Net
TERMS:

CUSTOMER CODE NUMBER:

Duns No. 00-902-8580

M/V "ISTRIAN EXPRESS"

For furnishing labor, material and equipment to accomplish repairs in accordance with the attached specifications.

Total Amount Due This Invoice $2,181.00

Partial
Ca/Ley
Net

ENTERED JAN 22 1990

PAST DUE PAYMENTS SHALL BEAR INTEREST AT THE HIGHEST LAWFUL RATE UNTIL REPAID, NOT TO EXCEED 1½% PER MONTH.

CORRESPONDENCE ADDRESS P.O. BOX 3109 PORTLAND, OREGON 97208 PHONE (503) 285-7557

NWMAR128234

598

NORTHWEST MARINE IRON WORKS

SHIP REPAIRERS
GENERAL MACHINE WORK
ENGINEERING

MAIL PAYMENT TO:
P.O. BOX 4000-58
PORTLAND, OREGON 97208

INVOICE

M/V "PINE TRUST" and Owners
c/o Cascade Shipping Company
10 N.W. 10th, Suite 500
Portland, Oregon 97209

DATE January 15, 1990
OUR JOB NO. 4205
CUSTOMER'S ORDER NO.
CONTRACT NO. 4205-1
INVOICE NO. Net
TERMS

CUSTOMER CODE NUMBER:

Duns No. 00-902-8580

M/V "PINE TRUST"

For furnishing labor, material and equipment to accomplish repairs in accordance with the attached specifications.

Total Amount Due This Invoice $8,562.00

Partial
Calley
NW

ENTERED JAN 22 1990

PAST DUE PAYMENTS SHALL BEAR INTEREST AT THE HIGHEST LAWFUL RATE UNTIL REPAID, NOT TO EXCEED 1½% PER MONTH.

CORRESPONDENCE ADDRESS P.O. BOX 3109 PORTLAND, OREGON 97208 PHONE (503) 285-7557

NWMAR128235

603

NORTHWEST MARINE IRON WORKS

SHIP REPAIRERS
GENERAL MACHINE WORK
ENGINEERING

MAIL PAYMENT TO:
P.O. BOX 4000-58
PORTLAND, OREGON 97208

INVOICE

Atlantic Marine Limited
P.O. Box HM 2089
Hamilton, Bermuda HMX

DATE	January 17, 1990
OUR JOB NO.	4213
CUSTOMER'S ORDER NO.	P.O. 2101190
CONTRACT NO.	
INVOICE NO.	4213-1
TERMS	Net

CUSTOMER CODE NUMBER:

Duns No. 00-902-8580

S/S "BERMUDA STAR"

Furnished labor and freight to ship boiler tubes
per the attached specification.

Labor:	$ 248.00
Freight:	2,181.00
Total Amount Due This Invoice	$2,429.00

FINAL
Mills
Net

ENTERED JAN 22 1990

PAST DUE PAYMENTS SHALL BEAR INTEREST AT THE HIGHEST LAWFUL RATE UNTIL REPAID, NOT TO EXCEED 1½% PER MONTH.

CORRESPONDENCE ADDRESS P.O. BOX 3109 PORTLAND, OREGON 97208 PHONE (503) 285-7557

NWMAR128236

6/3

NORTHWEST MARINE IRON WORKS

SHIP REPAIRERS
GENERAL MACHINE WORK
ENGINEERING

MAIL PAYMENT TO:
P.O. BOX 4000-58
PORTLAND, OREGON 97208

INVOICE

M/V "EVER HARMONY" and Owners
c/o General Steamship Corporation
421 S.W. 6th Avenue Suite 410
Portland, Oregon 97204

DATE January 19, 1990
OUR JOB NO. 4211-1
CUSTOMER'S ORDER NO.
CONTRACT NO. 4211-1
INVOICE NO. Net
TERMS

CUSTOMER CODE NUMBER:

Duns No. 00-902-8580

M/V "EVER HARMONY"

Furnished labor, material and equipment to accomplish repairs in accordance with attached specifications.

Total Amount Due This Invoice $13,503.00

Final
Called
Net

ENTERED JAN 29 1990

PAST DUE PAYMENTS SHALL BEAR INTEREST AT THE HIGHEST LAWFUL RATE UNTIL REPAID, NOT TO EXCEED 1½% PER MONTH.

CORRESPONDENCE ADDRESS P.O. BOX 3109 PORTLAND, OREGON 97208 PHONE (503) 285-7557

NWMAR128237

614

NORTHWEST MARINE IRON WORKS

SHIP REPAIRERS
GENERAL MACHINE WORK
ENGINEERING

MAIL PAYMENT TO:
P.O. BOX 4000-58
PORTLAND, OREGON 97208

INVOICE

M/V SANKO ROBIN and Owners
c/o Cascade Shipping Company
10 NW 10th Avenue
Portland, Oregon 97209

DATE: January 23, 1990
OUR JOB NO.: 4214
CUSTOMER'S ORDER NO.:
CONTRACT NO.:
INVOICE NO.: 4214-1
TERMS:

CUSTOMER CODE NUMBER:

Duns No. 00-902-8580

Furnished labor and material to accomplish repairs in accordance with the attached specifications.

TOTAL AMOUNT DUE THIS INVOICE $1,869.00

Final
Calley
Net

ENTERED JAN 29 1990

PAST DUE PAYMENTS SHALL BEAR INTEREST AT THE HIGHEST LAWFUL RATE UNTIL REPAID, NOT TO EXCEED 1½% PER MONTH.

CORRESPONDENCE ADDRESS P.O. BOX 3109 PORTLAND, OREGON 97208 PHONE (503) 285-7557

NWMAR128238

615

NORTHWEST MARINE IRON WORKS

SHIP REPAIRERS
GENERAL MACHINE WORK
ENGINEERING

MAIL PAYMENT TO:
P.O. BOX 4000-58
PORTLAND, OREGON 97208

INVOICE

M/V "ISTRAIN EXPRESS" and Owners
c/o Jones Oregon Stevedoring Company
2323 N.W.Suffolk St.
P.O. Box 10167
Portland, OR 97210

CUSTOMER CODE NUMBER:

DATE January 23, 1990
OUR JOB NO. 4208
CUSTOMER'S ORDER NO.
CONTRACT NO.
INVOICE NO. 4208-1
TERMS Net

Duns No. 00-902-8580

M/V "ISTRAIN EXPRESS"

Furnished labor and materials to accomplish repairs in accordance with the attached specifications.

Total Amount Due This Invoice $1,984.00

FINAL
Calley
Net

ENTERED JAN 29 1990

PAST DUE PAYMENTS SHALL BEAR INTEREST AT THE HIGHEST LAWFUL RATE UNTIL REPAID, NOT TO EXCEED 1½% PER MONTH.

CORRESPONDENCE ADDRESS P.O. BOX 3109 PORTLAND, OREGON 97208 PHONE (503) 285-7557

NWMAR128239

6/6

NORTHWEST MARINE IRON WORKS

SHIP REPAIRERS
GENERAL MACHINE WORK
ENGINEERING

MAIL PAYMENT TO:
P.O. BOX 4000-58
PORTLAND, OREGON 97208

INVOICE

M/V "PATRICIA" and Owners
c/o Transversal International
1800 N.W. Harbor Way
Portland, Oregon 97201

DATE January 24, 1990
OUR JOB NO. 4217
CUSTOMER'S ORDER NO.
CONTRACT NO.
INVOICE NO. 4217-1
TERMS Net

CUSTOMER CODE NUMBER:

Duns No. 00-902-8580

M/V "PARTICIA"

Furnished labor and materials to accomplish repairs in accordance with the attached specifications.

Total Amount Due This Invoice $2,978.00

FINAL
Calley
Net

ENTERED JAN 29 1990

PAST DUE PAYMENTS SHALL BEAR INTEREST AT THE HIGHEST LAWFUL RATE UNTIL REPAID, NOT TO EXCEED 1½% PER MONTH.

CORRESPONDENCE ADDRESS P.O. BOX 3109 PORTLAND, OREGON 97208 PHONE (503) 285-7557

NWMAR128240

617

NORTHWEST MARINE IRON WORKS

SHIP REPAIRERS
GENERAL MACHINE WORK
ENGINEERING

MAIL PAYMENT TO:
P.O. BOX 4000-58
PORTLAND, OREGON 97208

INVOICE

M/V "SINGA SUN" and Owners
c/o Fred Devine Diving and Salvage, Inc.
6211 N. Ensign
Portland, Oregon 97217

DATE January 24, 1990
OUR JOB NO. 4212
CUSTOMER'S ORDER NO. 10332
CONTRACT NO.
INVOICE NO. 4212-1
TERMS Net

CUSTOMER CODE NUMBER:

Duns No. 00-902-8580

M/V "SINGA SUN"

Furnished labor and materials to accomplish repairs in accordance with the attached specifications.

Total Amount Due This Invoice $9,126.00

Final
Calley
Net

ENTERED JAN 29 1990

PAST DUE PAYMENTS SHALL BEAR INTEREST AT THE HIGHEST LAWFUL RATE UNTIL REPAID, NOT TO EXCEED 1½% PER MONTH.

CORRESPONDENCE ADDRESS P.O. BOX 3109 PORTLAND, OREGON 97208 PHONE (503) 285-7557

NWMAR128241

Swan Jane 618

NORTHWEST MARINE IRON WORKS

SHIP REPAIRERS
GENERAL MACHINE WORK
ENGINEERING

MAIL PAYMENT TO:
P.O. BOX 4000-58
PORTLAND, OREGON 97208

INVOICE

M/V "SWIFTNESS" and Owners
c/o Barber Steamship Lines
319 S.W. Washington St.
Portland, Oregon 97204

DATE January 25, 1990
OUR JOB NO. 4209
CUSTOMER'S ORDER NO.
CONTRACT NO.
INVOICE NO. 4209-1
TERMS Net

CUSTOMER CODE NUMBER:

Duns No. 00-902-8580

M/V "SWIFTNESS"

Furnished labor and materials to accomplish repairs in accordance with the attached specifications.

Total Amount Due This Invoice $610.00

Final
Calley
Net

ENTERED JAN 29 1990

PAST DUE PAYMENTS SHALL BEAR INTEREST AT THE HIGHEST LAWFUL RATE UNTIL REPAID, NOT TO EXCEED 1½% PER MONTH.

CORRESPONDENCE ADDRESS P.O. BOX 3109 PORTLAND, OREGON 97208 PHONE (503) 285-7557

NWMAR128242

Susan Sens 619

NORTHWEST MARINE IRON WORKS

SHIP REPAIRERS
GENERAL MACHINE WORK
ENGINEERING

MAIL PAYMENT TO:
P.O. BOX 4000-58
PORTLAND, OREGON 97208

INVOICE

M/V "EVER HARMONY" and Owners
c/o General Steamship Corporation
421 S.W 6th Avenue, Suite 410
Portland, Oregon 97204

DATE January 25, 1990
OUR JOB NO. 4216
CUSTOMER'S ORDER NO.
CONTRACT NO.
INVOICE NO. 4216-1
TERMS Net

CUSTOMER CODE NUMBER:

Duns No. 00-902-8580

M/V "EVER HARMONY"

Furnished labor and materials to accomplish repairs in accordance with the attached specifications.

Total Amount Due This Invoice $924.00

Final
Calley
Net

ENTERED FEB 05 1990

ENTERED FEB 05 1990

PAST DUE PAYMENTS SHALL BEAR INTEREST AT THE HIGHEST LAWFUL RATE UNTIL REPAID, NOT TO EXCEED 1½% PER MONTH.

CORRESPONDENCE ADDRESS P.O. BOX 3109 PORTLAND, OREGON 97208 PHONE (503) 285-7557

NWMAR128243

NORTHWEST MARINE IRON WORKS

SHIP REPAIRERS
GENERAL MACHINE WORK
ENGINEERING

MAIL PAYMENT TO:
P.O. BOX 4000-58
PORTLAND, OREGON 97208

INVOICE

"ROTTERDAM"

DATE January 31, 1990
OUR JOB NO.
CUSTOMER'S ORDER NO. N4904
CONTRACT NO.
INVOICE NO. 9999-90
TERMS

CUSTOMER CODE NUMBER:

Duns No. 00-902-8580

INTERNAL CREDIT MEMO

Apply to Invoice 4904-15

Total amount this credit: ($1,978,795.00)

TS

ENTERED FEB 05 1990

PAST DUE PAYMENTS SHALL [illegible] INTEREST AT THE HIGHEST LAWFUL RATE UNTIL REP[illegible], NOT TO EXCEED 1½% PER MONTH.

CORRESPONDENCE ADDRESS P.O. BOX 3109 PORTLAND, OREGON 97208 [illegible]ONE (503) 285-7557

NWMAR128244

NORTHWEST MARINE IRON WORKS

SHIP REPAIRERS
GENERAL MACHINE WORK
ENGINEERING

MAIL PAYMENT TO:
P.O. BOX 4000-58
PORTLAND, OREGON 97208

INVOICE

B.S.L. Cruise Lines

DATE January 26, 1990
OUR JOB NO. N4906
CUSTOMER'S ORDER NO.
CONTRACT NO.
INVOICE NO. 4906-96
TERMS

CUSTOMER CODE NUMBER:

Duns No. 00-902-8580

- CREDIT MEMO -

FOR INTERNAL USE ONLY

CREDIT TO OFFSET PROGRESS BILLINGS REBILLED AT TIME OF FINAL IN
INVOICE.

APPLY TO 4906-09 ($1,624,574.35)

ENTERED JAN 29 1990

TS

PAST DUE PAYMENTS SHALL BEAR INTEREST AT THE HIGHEST LAWFUL RATE UNTIL REPAID NOT TO EXCEED 1½% PER MONTH.

CORRESPONDENCE ADDRESS P.O. BOX 3109 PORTLAND, OREGON 97208 PHONE (503) 285-7557

NWMAR128245

NORTHWEST MARINE IRON WORKS

SHIP REPAIRERS
GENERAL MACHINE WORK
ENGINEERING

MAIL PAYMENT TO:
P.O. BOX 4000-58
PORTLAND, OREGON 97208

INVOICE

B.S.L. Cruise Lines

DATE January 26, 1990
OUR JOB NO.
CUSTOMER'S ORDER NO. N4906
CONTRACT NO.
INVOICE NO. 4906-97
TERMS

CUSTOMER CODE NUMBER:

Duns No. 00-902-8580

- CREDIT MEMO -

FOR INTERNAL USE ONLY

CREDIT TO OFFSET PROGRESS BILLINGS REBILLED AT
TIME OF FINAL INVOICE.

APPLY TO 4906-08 ($2,023,968,00)

ENTERED JAN 29 1990

TS

PAST DUE PAYMENTS SHALL BEAR INTEREST AT THE HIGHEST LAWFUL RATE UNTIL REPAID NOT TO EXCEED 1½% PER MONTH.

CORRESPONDENCE ADDRESS P.O. BOX 3109 PORTLAND, OREGON 97208 PHONE (503) 285-7557

NWMAR128246

NORTHWEST MARINE IRON WORKS

SHIP REPAIRERS
GENERAL MACHINE WORK
ENGINEERING

INVOICE

MAIL PAYMENT TO:
P.O. BOX 4000-58
PORTLAND, OREGON 97208

B.S.L. Cruise Lines

DATE January 26, 1990
OUR JOB NO. N4906
CUSTOMER'S ORDER NO.
CONTRACT NO.
INVOICE NO. 4906-98
TERMS

CUSTOMER CODE NUMBER:

Duns No. 00-902-8580

- CREDIT MEMO -
FOR INTERNAL USE ONLY

CREDIT TO OFFSET PROGRESS BILLINGS REBILLED AT
TIME OF FINAL INVOICE.

APPLY TO 4906-07 ($268,041.65)

ENTERED JAN 29 1990

TS

PAST DUE PAYMENTS SHALL BEA' 'EREST AT THE HIGHEST LAWFUL RATE UNTIL REPAI' T TO EXCEED 1½% PER MONTH.

CORRESPONDENCE ADDRESS P.O. BOX 3109 PORTLAND, OREGON 97208 PHONE (503) 285-7557

NWMAR128247

NORTHWEST MARINE IRON WORKS

SHIP REPAIRERS
GENERAL MACHINE WORK
ENGINEERING

MAIL PAYMENT TO:
P.O. BOX 4000-58
PORTLAND, OREGON 97208

INVOICE

B.S.L. Cruise Lines

DATE January 26, 1990
OUR JOB NO. N4906
CUSTOMER'S ORDER NO.
CONTRACT NO.
INVOICE NO. 4906-99
TERMS

CUSTOMER CODE NUMBER:

Duns No. 00-902-8580

- CREDIT MEMO -

FOR INTERNAL USE ONLY

CREDIT TO OFFSET PROGRESS BILLINGS REBILLED AT TIME OF FINAL INVOICE.

APPLY TO	4906-06	($473,005.00)

ENTERED JAN 29 1990

TS

PAST DUE PAYMENTS SHALL BEA 'EREST AT THE HIGHEST LAWFUL RATE UNTIL REPAI T TO EXCEED 1½% PER MONTH.

CORRESPONDENCE ADDRESS P.O. BOX 3109 PORTLAND, OREGON 97208 PHONE (503) 285-7557

NWMAR128248

NORTHWEST MARINE IRON WORKS

SHIP REPAIRERS
GENERAL MACHINE WORK
ENGINEERING

MAIL PAYMENT TO:
P.O. BOX 4000-58
PORTLAND, OREGON 97208

INVOICE

S/S Bermuda Star

DATE January 12, 1989
OUR JOB NO. N4911
CUSTOMER'S ORDER NO.
CONTRACT NO.
INVOICE NO. 4911-98
TERMS

CUSTOMER CODE NUMBER:

Duns No. 00-902-8580

"INTERNAL CREDIT MEMO"

Internal Credit Memo to offset Invoice 4911-01

Total Amount this Credit Memo: (3,398,917.00)

TB

ENTERED JAN 15 1990

PAST DUE PAYMENTS SHALL BE INTEREST AT THE HIGHEST LAWFUL RATE UNTIL REPAID NOT TO EXCEED 1½% PER MONTH.

CORRESPONDENCE ADDRESS P.O. BOX 3109 PORTLAND, OREGON 97208 PHONE (503) 285-7557

NWMAR128249

NORTHWEST MARINE IRON WORKS
INVOICES BY CALLEY

MONTH OF December 1988

CUSTOMER	SHIP	INVOICE DATE	INVOICE NUMBER	INVOICE AMOUNT	INVOICE PAYMENT DATE	COMMISSION PERCENT	COMMISSION AMOUNT	COMMISSION DATE PAID	COMMISSION CHECK NUMBER
Sunrise Shipping	M/V Sea	12/5/88	3445	$4,630.00	5/9/89	10%	463.00	5/24/89	265562
Sunrise Shipping	M/V Fayrouz II	12/5/88	3446	2,372.00	1/6/89	10%	237.20	1/16/89	266199
S/S Cove Leader	S/S Cove Leader	12/2/88	3450	100.00	12/16			12/6/88	*
Sunrise Shipping	Fayrouz II	12/5/88	3446A	1,078.00	1/6/89		237.20	1-16-89	266199
Strachen Shipping	Fayrouz II	12/7/88	3449	9,562.00	1/3/89	10%	956.20	1-16-89	266199
Cascade Shipping	Spring Falcon	12/7/88	3451	1,210.00	1/16/89	10%	121.00	2-8-89	267107
Holland America		12/15/88	3448	2,016.00	1/27/89	10%	201.60	2-8-89	267107
Matson Agency	General Zirona	12/19/88	3455	3,729.00	1/26/89	10%	372.90	2-8-89	267107
Jones & Legon Stevedoring Co	General Zirona	12/19/88	3456	120.00	1/30/89				*

NWMAR128250

NORTHWEST MARINE IRON WORKS

SHIP REPAIRERS
GENERAL MACHINE WORK
ENGINEERING

MAIL PAYMENT TO:
P.O. BOX 4000-58
PORTLAND, OREGON 97208

INVOICE

M/V "LIA" and Owners
c/o Sunrise Shipping Agency
1515 S.W. 5th Avenue, Suite 550
Portland, Oregon 97201

DATE	December 5, 1988
OUR JOB NO.	3445
CUSTOMER'S ORDER NO.	
CONTRACT NO.	
INVOICE NO.	3445
TERMS	Net

CUSTOMER CODE NUMBER: 029150

Duns No. 00-902-8580

M/V "LIA"

For furnishing labor, material and equipment to accomplish repairs in accordance with the attached specifications.

Total Amount Due This Invoice $4,630.00

Net
Calley
Final

PAST DUE PAYMENTS SHALL BEAR INTEREST AT THE HIGHEST LAWFUL RATE UNTIL REPAID, NOT TO EXCEED 1½% PER MONTH.

CORRESPONDENCE ADDRESS P.O. BOX 3109 PORTLAND, OREGON 97208 PHONE (503) 285-7557

NWMAR128251

NORTHWEST MARINE IRON WORKS

SHIP REPAIRERS
GENERAL MACHINE WORK
ENGINEERING

MAIL PAYMENT TO:
P.O. BOX 4000-58
PORTLAND, OREGON 97208

INVOICE

M/V "FAYROUZ II" and Owners
c/o Sunrise Shipping Agency
1515 S.W. 5th Avenue, Suite 550
Portland, Oregon 97201

DATE December 5, 1988
OUR JOB NO. 3446
CUSTOMER'S ORDER NO.
CONTRACT NO.
INVOICE NO. 3446
TERMS Net

CUSTOMER CODE NUMBER: 029150

Duns No. 00-902-8580

M/V "FAYROUZ II"

For furnishing labor, material and equipment to accomplish repairs in accordance with the attached specifications.

Total Amount Due This Invoice $2,372.00

Net
Collect
Final

PAST DUE PAYMENTS SHALL BEAR INTEREST AT THE HIGHEST LAWFUL RATE UNTIL REPAID, NOT TO EXCEED 1½% PER MONTH.

CORRESPONDENCE ADDRESS P.O. BOX 3109 PORTLAND, OREGON 97208 PHONE (503) 285-7557

NWMAR128252

NORTHWEST MARINE IRON WORKS

SHIP REPAIRERS
GENERAL MACHINE WORK
ENGINEERING

INVOICE

MAIL PAYMENT TO:
P.O. BOX 4000-58
PORTLAND, OREGON 97208

S/S COVE LEADER

DATE December 2, 1988
OUR JOB NO. 3450
CUSTOMER'S ORDER NO.
CONTRACT NO.
INVOICE NO. 3450
TERMS Net

CUSTOMER CODE NUMBER:

Duns No. 00-902-8580

S/S COVE LEADER

For furnishing labor, material, and equipment to accomplish repairs.

Total Amount of Invoice $100.00

PAID IN FULL

Net
Calley
Final

PAST DUE PAYMENTS SHALL BEAR INTEREST AT THE HIGHEST LAWFUL RATE UNTIL REPAID, NOT TO EXCEED 1½% PER MONTH.

CORRESPONDENCE ADDRESS P.O. BOX 3109 PORTLAND, OREGON 97208 PHONE (503) 285-7557

NWMAR128253

NORTHWEST MARINE IRON WORKS

15

SHIP REPAIRERS
GENERAL MACHINE WORK
ENGINEERING

MAIL PAYMENT TO:
P.O. BOX 4000-58
PORTLAND, OREGON 97208

INVOICE

M/V "FAYROUZ II" and Owners
c/o Sunrise Shipping Agency
1515 S.W. 5th Avenue, Suite 550
Portland, Oregon 97201

DATE December 5, 1988
OUR JOB NO. 3446
CUSTOMER'S ORDER NO.
CONTRACT NO.
INVOICE NO. 3446
TERMS Net

CUSTOMER CODE NUMBER: 029150

Duns No. 00-902-8580

CORRECTED INVOICE
M/V "FAYROUZ II"

For furnishing labor, material and equipment to accomplish repairs in accordance with the attached specifications.

Total Amount Due This Invoice $1,078.00
=========

Final Calley Net

PAST DUE PAYMENTS SHALL BEAR INTEREST AT THE HIGHEST LAWFUL RATE UNTIL REPAID, NOT TO EXCEED 1½% PER MONTH

CORRESPONDENCE ADDRESS P.O. BOX 3109 PORTLAND, OREGON 97208 PHONE (503) 285-7557

16

NORTHWEST MARINE IRON WORKS

SHIP REPAIRERS
GENERAL MACHINE WORK
ENGINEERING

MAIL PAYMENT TO:
P.O. BOX 4000-58
PORTLAND, OREGON 97208

INVOICE

M/V "FAYROUZ II" and Owners
c/o Strachen Shipping
Hoegh Lines Agencies, Inc.
720 3rd Avenue, Suite 2001
Seattle, WA 98104

CUSTOMER CODE NUMBER: 028697

DATE	December 7, 1988
OUR JOB NO.	3449
CUSTOMER'S ORDER NO.	
CONTRACT NO.	
INVOICE NO.	3449
TERMS	Net Upon Receipt of Invoice

Duns No. 00-902-8580

M/V "FAYROUZ II"

For furnishing labor, material, and equipment to accomplish repairs in accordance with the attached specifications.

Total Amount of Invoice $9,562.00

Final Called

PAST DUE PAYMENTS SHALL BEAR INTEREST AT THE HIGHEST LAWFUL RATE UNTIL REPAID, NOT TO EXCEED 1½% PER MONTH.

CORRESPONDENCE ADDRESS P.O. BOX 3109 PORTLAND, OREGON 97208 PHONE (503) 285-7557

NWMAR128255

NORTHWEST MARINE IRON WORKS

SHIP REPAIRERS
GENERAL MACHINE WORK
ENGINEERING

MAIL PAYMENT TO:
P.O. BOX 4000-58
PORTLAND, OREGON 97208

INVOICE

M/V "SPRING FALCON" and Owners
c/o Cascade Shipping Company
806 S.W. Broadway, Suite 550
Portland, Oregon 97205

DATE December 7, 1988
OUR JOB NO. 3451
CUSTOMER'S ORDER NO.
CONTRACT NO.
INVOICE NO. 3451
TERMS Net Upon Receipt of Invoice

CUSTOMER CODE NUMBER: 001948

Duns No. 00-902-8580

M/V "SPRING FALCON"

For furnishing labor, material, and equipment to accomplish repairs in accordance with the attached specifications.

Total Amount of Invoice $1,210.00
==========

Dim al
Cellar
Net

PAST DUE PAYMENTS SHALL BEAR INTEREST AT THE HIGHEST LAWFUL RATE UNTIL REPAID, NOT TO EXCEED 1½% PER MONTH.

CORRESPONDENCE ADDRESS P.O. BOX 3109 PORTLAND, OREGON 97208 PHONE (503) 285-7557

NORTHWEST MARINE IRON WORKS

SHIP REPAIRERS
GENERAL MACHINE WORK
ENGINEERING

MAIL PAYMENT TO:
P.O. BOX 4000-58
PORTLAND, OREGON 97208

INVOICE

Holland America Line
Elliot Bay Office Park
300 Elliot Avenue West
Seattle, Washington 98119
Attention: Mr. Adrian Krap

CUSTOMER CODE NUMBER: 007203

DATE: December 15, 1988
OUR JOB NO.: 3448
CUSTOMER'S ORDER NO.:
CONTRACT NO.:
INVOICE NO.: 3448
TERMS: Net Upon Receipt of Invoice

Duns No. 00-902-8580

For furnishing labor, material, and equipment to accomplish service in accordance with the attached specifications.

Total Amount of Invoice $2,016.00

Jerral Calley
Net 30

PAST DUE PAYMENTS SHALL BEAR INTEREST AT THE HIGHEST LAWFUL RATE UNTIL REPAID, NOT TO EXCEED 1½% PER MONTH

CORRESPONDENCE ADDRESS P.O. BOX 3109 PORTLAND, OREGON 97208 PHONE (503) 285-7557

NWMAR128257

50

NORTHWEST MARINE IRON WORKS

SHIP REPAIRERS
GENERAL MACHINE WORK
ENGINEERING

MAIL PAYMENT TO:
P.O. BOX 4000-58
PORTLAND, OREGON 97208

INVOICE

M/V "GENERAL TIRONA" and Owners
c/o Matson Agency Inc.
1618 S.W. 1st St. Suite 415
Portland, Oregon 97201

DATE December 19, 1988
OUR JOB NO. 3455
CUSTOMER'S ORDER NO.
CONTRACT NO.
INVOICE NO. 3455
TERMS Net

CUSTOMER CODE NUMBER: 011988

Duns No. 00-902-8580

M/V "GENERAL TIRONA"

For furnishing labor, material and equipment to accomplish repairs in accordance with the attached specifications.

Total Amount Due This Invoice $3,729.00

FINAL
CAlley
Net

PAST DUE PAYMENTS SHALL BEAR INTEREST AT THE HIGHEST LAWFUL RATE UNTIL REPAID, NOT TO EXCEED 1½% PER MONTH.

CORRESPONDENCE ADDRESS P.O. BOX 3109 PORTLAND, OREGON 97208 PHONE (503) 285-7557

NORTHWEST MARINE IRON WORKS

SHIP REPAIRERS
GENERAL MACHINE WORK
ENGINEERING

MAIL PAYMENT TO:
P.O. BOX 4000-58
PORTLAND, OREGON 97208

INVOICE

Jones Oregon Stevedoring Company
2323 N.W. Suffolk
Portland, Oregon 97210

DATE December 19, 1988
OUR JOB NO. 3456
CUSTOMER'S ORDER NO.
CONTRACT NO.
INVOICE NO. 3456
TERMS Net

CUSTOMER CODE NUMBER: 009040

Duns No. 00-902-8580

M/V "GENERAL TIRONA"

For furnishing labor, material and equipment to accomplish repairs in accordance with the attached specifications.

Total Amount Due This Invoice $ 120.00

FINAL
CALLEY
NET

PAST DUE PAYMENTS SHALL BEAR INTEREST AT THE HIGHEST LAWFUL RATE UNTIL REPAID, NOT TO EXCEED 1½% PER MONTH.

CORRESPONDENCE ADDRESS P.O. BOX 3109 PORTLAND, OREGON 97208 PHONE (503) 285-7557

NORTHWEST MARINE IRON WORKS
INVOICES BY CALLEY

MONTH OF November 1988

CUSTOMER	SHIP	INVOICE DATE	INVOICE NUMBER	INVOICE AMOUNT	INVOICE PAYMENT DATE	COMMISSION PERCENT	COMMISSION AMOUNT	DATE PAID	CHECK NUMBER
Central Gulf Lines	Green Ridge	11/3/88	3349C	1,743,090.00				11-14	266256
Central Gulf Lines	Green Ridge	11/7/88	3349-D	(147,619.00)				11-14	266256
Carnival Lines	Tropicale	11/7/88	3405	250,000.00	11-7-88		50,000.00	12-16-88	266198
Corral Lines	MS Adele	11/9/88	3354-B	(36,000.00)					
General Steamship	Sun Orchid	11/10/88	3422-A	15,153.00	11-23-88	13.17	1996.20	12-02-88	266185
Holland America	Westerdam	11/15/88	3436	1,658.00		10%	165.80	2-8-89	267107
Barber Wilhelmson	Lenu Sagar	11/15/88	3433	17,045.60	12/8/88		1,204.50	12-16-88	266198
Fritz Maritime	Ingrid Leonhardt	11/15/88	3438	6,600.00	12/12/88	10%	660.00	266198	12-16-88
First Ocean Marine	Sea Wagner	11/15/88	3435	320.00		10%	32.00		(unpd) 4-14
Star Shipping	Star Denver	11/18/88	3425	58,056.40	6/12/89	10%	5,805.64	1-16-89	266199
Merit Steamship	Claridge	11/18/88	3442	1,672.00	2/3/89	10%	167.20	2-21-89	267116
Merit Steamship	Haul Transporter	11/18/88	3441	2,556.00	1/20/89	10%	255.60	2-8-89	267107
Cascade Shipping	Maam	11/28/88	3444	1,346.00	1/9/89	10%	134.60	1-16-89	266199
Chartered De L'Atlantique	Nieuw Amsterdam	11/30/88	3110-X	1,500.00	1/4/89	10%	150.00	1-16-89	266199
Carnival Cruise	Tropicale	11/30/88	3405-A	117,044.00				12-15-88	266198
Carnival Cruise	Tropicale	11/30/88	3405-B	88,906.00		18.28%	50,000.00	12-15-88	
Carnival Cruise	Tropicale	11/30/88	3405-C	67,550.00				12-15-88	

W/O #320 6-20-90

PAH 1/13/89 per G/L - customer not pd yet

NWMAR128260

16

NORTHWEST MARINE IRON WORKS

SHIP REPAIRERS
GENERAL MACHINE WORK
ENGINEERING

MAIL PAYMENT TO:
P.O. BOX 4000-58
PORTLAND, OREGON 97208

INVOICE

Attn: Mr. Erik L. Johnson
Executive Vice President
Central Gulf Lines
International Trade Mart
650 Porydras Street, Suite 1700
New Orleans, LA 70130

CUSTOMER CODE NUMBER: 008343

DATE	November 3, 1988
OUR JOB NO.	3349
CUSTOMER'S ORDER NO.	
CONTRACT NO.	
INVOICE NO.	3349C
TERMS	Due Upon Receipt of Invoice

Duns No. 00-902-8580

M/V "GREEN RIDGE"
EX WOERMANN MERCUR

Original Bid Proposal and Additional Items	$3,645,943.00
Negotiated Credit	(300,000.00)
Total Cost	$3,345,943.00
Progress Payments:	
60% of Original Contract	(1,155,234.00)
D Rings	(147,619.00)
Progress Payment	(300,000.00)
FINAL BILLING	$1,743,090.00

Final Calley Net

PAST DUE PAYMENTS SHALL BEAR INTEREST AT THE HIGHEST LAWFUL RATE UNTIL REPAID, NOT TO EXCEED 1½% PER MONTH.

CORRESPONDENCE ADDRESS P.O. BOX 3109 PORTLAND, OREGON 97208 PHONE (503) 285-7557

NORTHWEST MARINE IRON WORKS

SHIP REPAIRERS
GENERAL MACHINE WORK
ENGINEERING

INVOICE

MAIL PAYMENT TO:
P.O. BOX 4000-58
PORTLAND, OREGON 97208

Central Gulf Lines
International Trade Mart
650 Poydras Street, suite 1700
New Orleans, LA 70130

DATE Nov. 7, 1988
OUR JOB NO. 3349
CUSTOMER'S ORDER NO.
CONTRACT NO.
INVOICE NO. 3349-D
TERMS Net

CUSTOMER CODE NUMBER: 008343

Duns No. 00-902-8580

M/V GREEN RIDGE

EX WOERMANN MERCUR

INTERNAL ONLY

To Credit Invoice 3349-A	($147,619.00)
TOTAL CREDIT DUE:	($147,619.00)

Credit O'Rourke

PAST DUE PAYMENTS SHALL BEAR INTEREST AT THE HIGHEST LAWFUL RATE UNTIL REPAID, NOT TO EXCEED 1½% PER MONTH.

CORRESPONDENCE ADDRESS P.O. BOX 3109 PORTLAND, OREGON 97208 PHONE (503) 285-7557

19

NORTHWEST MARINE IRON WORKS

SHIP REPAIRERS
GENERAL MACHINE WORK
ENGINEERING

MAIL PAYMENT TO:
P.O. BOX 4000-58
PORTLAND, OREGON 97208

INVOICE

M/V "Tropicale"
c/o Carnival Criose :omes
5225 N. W. 87th Avenue
Miami, FL 33166

DATE Nov. 7, 1988
OUR JOB NO. 3405
CUSTOMER'S ORDER NO.
CONTRACT NO.
INVOICE NO. 3405
TERMS Net

CUSTOMER CODE NUMBER: 001930

Duns No. 00-902-8580

INTERNAL ONLY

M/V TROPICALE

Progress Billing	$250,000.00
TOTAL AMOUNT DUE THIS INVOICE:	$250,000.00

Partial
Invoice
Net

PAST DUE PAYMENTS SHALL BEAR INTEREST AT THE HIGHEST LAWFUL RATE UNTIL REPAID, NOT TO EXCEED 1½% PER MONTH.

CORRESPONDENCE ADDRESS P.O. BOX 3109 PORTLAND, OREGON 97208 PHONE (503) 285-7557

NWMAR128263

NORTHWEST MARINE IRON WORKS

32

SHIP REPAIRERS
GENERAL MACHINE WORK
ENGINEERING

MAIL PAYMENT TO:
P.O. BOX 4000-58
PORTLAND, OREGON 97208

INVOICE

M.S. Adele
Corral Lines APS
P. O. Box 69
DK 6300 Graasten
Denmark

DATE	Nov. 9, 1988
OUR JOB NO.	3354
CUSTOMER'S ORDER NO	
CONTRACT NO	
INVOICE NO	3354-B
TERMS	Net

CUSTOMER CODE NUMBER: 002705

Duns No 00-902-8580

M.S. ADELE

INTERNAL ONLY

To void invoice 3354-A, amount already billed	($36,000.00)
TOTAL CREDIT DUE:	($36,000.00)

Credit O'Rourke

PAST DUE PAYMENTS SHALL BEAR INTEREST AT THE HIGHEST LAWFUL RATE UNTIL REPAID, NOT TO EXCEED 1½% PER MONTH

CORRESPONDENCE ADDRESS P.O. BOX 3109 PORTLAND, OREGON 97208 PHONE (503) 285-7557

NORTHWEST MARINE IRON WORKS

SHIP REPAIRERS
GENERAL MACHINE WORK
ENGINEERING

MAIL PAYMENT TO:
P.O. BOX 4000-58
PORTLAND, OREGON 97208

INVOICE

M/V "SUN ORCHID" and Owner
c/o General Steamship Corporation
421 S.W. 6th Avenue, Suite 410
Portland, Oregon 97204

DATE November 10, 1988
OUR JOB NO. 3422
CUSTOMER'S ORDER NO.
CONTRACT NO.
INVOICE NO. 3422A
TERMS Net

CUSTOMER CODE NUMBER: 006200

Duns No. 00-902-8580

M/V "SUN ORCHID"

For furnishing labor, material, and equipment to accomplish repairs in accordance with the attached specifications.

Corrected Invoice - Total Amount Due	$15,153.00

PAST DUE PAYMENTS SHALL BEAR INTEREST AT THE HIGHEST LAWFUL RATE UNTIL REPAID, NOT TO EXCEED 1½% PER MONTH.

CORRESPONDENCE ADDRESS P.O. BOX 3109 PORTLAND, OREGON 97208 PHONE (503) 285-7557

45

NORTHWEST MARINE IRON WORKS

SHIP REPAIRERS
GENERAL MACHINE WORK
ENGINEERING

MAIL PAYMENT TO:
P.O. BOX 4000-58
PORTLAND, OREGON 97208

INVOICE

M/V "WESTERDAM" and Owners
c/o Holland America Lines
Elliott Bay Office Park
300 Elliott Avenue West
Seattle, WA 98119
Attention: Mr. J. L. Adriaanse

CUSTOMER CODE NUMBER: 007203

DATE November 15, 1988
OUR JOB NO. 3436
CUSTOMER'S ORDER NO.
CONTRACT NO.
INVOICE NO. 3436
TERMS Net

Duns No. 00-902-8580

M/V "WESTERDAM"

Furnish labor, material and transportation to ship Owner
Furnished Laminate Panelling to vessel c/o Master
to Newport News Shipbuilding and Repair Co.,
Newport News, VA via air and truck.

Total Amount Due This Invoice $1,658.00
=========

Final
Culley
Net

PAST DUE PAYMENTS SHALL BEAR INTEREST AT THE HIGHEST LAWFUL RATE UNTIL REPAID, NOT TO EXCEED 1½% PER MONTH.

CORRESPONDENCE ADDRESS P.O. BOX 3109 PORTLAND, OREGON 97208 PHONE (503) 285-7557

NWMAR128266

NORTHWEST MARINE IRON WORKS

46

SHIP REPAIRERS
GENERAL MACHINE WORK
ENGINEERING

MAIL PAYMENT TO:
P.O. BOX 4000-58
PORTLAND, OREGON 97208

INVOICE

M/V "RENU SAGAR" and Owners
c/o Barber Wilhelmson
1750 N.W. Front Avenue, Suite 104
Portland, Oregon 97209

DATE November 15, 1988
OUR JOB NO. 3433
CUSTOMER'S ORDER NO.
CONTRACT NO.
INVOICE NO. 3433
TERMS Net

CUSTOMER CODE NUMBER: 000888

Duns No. 00-902-8580

M/V "RENU SAGAR"

For furnishing labor, material, and equipment to accomplish repairs in accordance with the attached specifications.

Total Amount Due $17,045.60

Final
Cully
Net

PAST DUE PAYMENTS SHALL BEAR INTEREST AT THE HIGHEST LAWFUL RATE UNTIL REPAID, NOT TO EXCEED 1½% PER MONTH.

CORRESPONDENCE ADDRESS P.O. BOX 3109 PORTLAND, OREGON 97208 PHONE (503) 285-7557

NORTHWEST MARINE IRON WORKS

47

SHIP REPAIRERS
GENERAL MACHINE WORK
ENGINEERING

MAIL PAYMENT TO:
P.O. BOX 4000-58
PORTLAND, OREGON 97208

INVOICE

M/V "INGRID LEONHARDT" and Owners
c/o Fritz Maritime Agencies, Inc
P.O. Box 2964
Portland, Oregon 97209

DATE November 15, 1988
OUR JOB NO. 3438
CUSTOMER'S ORDER NO.
CONTRACT NO.
INVOICE NO. 3438
TERMS Net

CUSTOMER CODE NUMBER: 005065

Duns No. 00-902-8580

M/V "INGRID LEONHARDT"

For furnishing labor, material, and equipment to accomplish repairs in accordance with the attached specifications.

Total Amount of Invoice	$7,386.80
Total Agreed Price of This Invoice	$6,600.00

Final Collect Net

*PAST DUE PAYMENTS SHALL BEAR INTEREST AT THE HIGHEST LAWFUL RATE UNTIL REPAID, NOT TO EXCEED 1½% PER MONTH.

CORRESPONDENCE ADDRESS P.O. BOX 3109 PORTLAND, OREGON 97208 PHONE (503) 285-7557

NWMAR128268

NORTHWEST MARINE IRON WORKS

48

SHIP REPAIRERS
GENERAL MACHINE WORK
ENGINEERING

MAIL PAYMENT TO:
P.O. BOX 4000-58
PORTLAND, OREGON 97208

INVOICE

M/V "SEA WAGNER" and Owners
c/o First Ocean Marine
2055 Woodside Road
Redwood City, Oregon 94061

DATE	November 15, 1988
OUR JOB NO.	3435
CUSTOMER'S ORDER NO.	
CONTRACT NO.	
INVOICE NO.	3435
TERMS	Net

CUSTOMER CODE NUMBER: 004785

Duns No. 00-902-8580

M/V "SEA WAGNER"

For furnishing labor, material, and equipment to accomplish repairs in accordance with the attached specifications.

Total Amount of Invoice $320.00
=======

Dan of
Colley
Net

PAST DUE PAYMENTS SHALL BEAR INTEREST AT THE HIGHEST LAWFUL RATE UNTIL REPAID, NOT TO EXCEED 1½% PER MONTH.

CORRESPONDENCE ADDRESS P.O. BOX 3109 PORTLAND, OREGON 97208 PHONE (503) 285-7557

65

NORTHWEST MARINE IRON WORKS

SHIP REPAIRERS
GENERAL MACHINE WORK
ENGINEERING

MAIL PAYMENT TO:
P.O. BOX 4000-58
PORTLAND, OREGON 97208

INVOICE

M/V "STAR DENVER" and Owners
c/o Star Shipping Company
Oregon Pioneer Building, Suite 307
Portland, Oregon 97204

DATE November 18, 1988
OUR JOB NO. 3425
CUSTOMER'S ORDER NO.
CONTRACT NO.
INVOICE NO. 3425
TERMS Net

CUSTOMER CODE NUMBER 028470

Duns No. 00-902-8580

M/V "STAR DENVER"

For furnishing labor, material, and equipment to accomplish repairs in accordance with the attached specifications.

Total Amount of Invoice $58,056.40
==========

Final Collly Net

PAST DUE PAYMENTS SHALL BEAR INTEREST AT THE HIGHEST LAWFUL RATE UNTIL REPAID, NOT TO EXCEED 1½% PER MONTH.

CORRESPONDENCE ADDRESS P.O. BOX 3109 PORTLAND, OREGON 97208 PHONE (503) 285-7557

66

NORTHWEST MARINE IRON WORKS

SHIP REPAIRERS
GENERAL MACHINE WORK
ENGINEERING

MAIL PAYMENT TO:
P.O. BOX 4000-58
PORTLAND, OREGON 97208

INVOICE

M/V "CLARIDGE" and Owners
c/o Merit Steamship Agency
101 S.W. Main
Portland, Oregon 97204

DATE	November 18, 1988
OUR JOB NO.	3442
CUSTOMER'S ORDER NO.	
CONTRACT NO.	
INVOICE NO.	3442
TERMS	Net

CUSTOMER CODE NUMBER: 012690

Duns No. 00-902-8580

M/V "CLARIDGE"

For furnishing labor, material and equipment to accomplish repairs in accordance with the attached specifications.

Total Amount Due This Invoice $1,672.00
=========

Final Calling Net

PAST DUE PAYMENTS SHALL BEAR INTEREST AT THE HIGHEST LAWFUL RATE UNTIL REPAID, NOT TO EXCEED 1½% PER MONTH.

CORRESPONDENCE ADDRESS P.O. BOX 3109 PORTLAND, OREGON 97208 PHONE (503) 285-7557

NORTHWEST MARINE IRON WORKS

67

SHIP REPAIRERS
GENERAL MACHINE WORK
ENGINEERING

MAIL PAYMENT TO:
P.O. BOX 4000-58
PORTLAND, OREGON 97208

INVOICE

M/V "HAUL TRANSPORTER" and Owners
c/o Merit Steamship Agency
101 S.W. Main
Portland, Oregon 97204

DATE November 18, 1988
OUR JOB NO. 3441
CUSTOMER'S ORDER NO.
CONTRACT NO.
INVOICE NO. 3441
TERMS Net

CUSTOMER CODE NUMBER: 012690

Duns No. 00-902-8580

M/V "HAUL TRANSPORTER"

For furnishing labor, material and equipment to accomplish repairs in accordance with the attached specifications.

Total Amount Due This Invoice $2,556.00
=========

Final Collect Net

PAST DUE PAYMENTS SHALL BEAR INTEREST AT THE HIGHEST LAWFUL RATE UNTIL REPAID, NOT TO EXCEED 1½% PER MONTH.

CORRESPONDENCE ADDRESS P.O. BOX 3109 PORTLAND, OREGON 97208 PHONE (503) 285-7557

NWMAR128272

NORTHWEST MARINE IRON WORKS

SHIP REPAIRERS
GENERAL MACHINE WORK
ENGINEERING

MAIL PAYMENT TO:
P.O. BOX 4000-58
PORTLAND, OREGON 97208

INVOICE

M/V "MAAM" and Owners
c/o Cascade Shipping Company
806 S.W. Broadway Suite 550
Portland, Oregon 97205

DATE November 28, 1988
OUR JOB NO. 3444
CUSTOMER'S ORDER NO.
CONTRACT NO.
INVOICE NO. 3444
TERMS Net

CUSTOMER CODE NUMBER: 001948

Duns No. 00-902-8580

M/V "MAAM"

For furnishing labor, material, and equipment to accomplish repairs in accordance with the attached specifications.

Total Amount of Invoice $1,346.00

Terral
Calley
Nev

•PAST DUE PAYMENTS SHALL BEAR INTEREST AT THE HIGHEST LAWFUL RATE UNTIL REPAID, NOT TO EXCEED 1½% PER MONTH.

CORRESPONDENCE ADDRESS P.O. BOX 3109 PORTLAND, OREGON 97208 PHONE (503) 285-7557

NWMAR128273

NORTHWEST MARINE IRON WORKS

79

SHIP REPAIRERS
GENERAL MACHINE WORK
ENGINEERING

MAIL PAYMENT TO:
P.O. BOX 4000-58
PORTLAND, OREGON 97208

INVOICE

Chantiers De L'Atlantique
Alshom-Atlantique
B. P. 400-44608
St. Nazaire, Cedex
FRANCE

DATE: ~~Dec. 1,~~ NOV 30 1988
OUR JOB NO.: 3110
CUSTOMER'S ORDER NO.:
CONTRACT NO.:
INVOICE NO.: 3110-X
TERMS: Net

CUSTOMER CODE NUMBER: 02119

Duns No. 00-902-8580

Warehouse charges for the main engine generator step-up gears, Ex-Noordam and Nieuw Amsterdam.

Charges for the month of December, 1988.

TOTAL AMOUNT DUE THIS INVOICE: $1,500.00

PARTIAL
CALLEY
NET

PAST DUE PAYMENTS SHALL BEAR INTEREST AT THE HIGHEST LAWFUL RATE UNTIL REPAID, NOT TO EXCEED 1½% PER MONTH.

CORRESPONDENCE ADDRESS P.O. BOX 3109 PORTLAND, OREGON 97208 PHONE (503) 285-7557

NORTHWEST MARINE IRON WORKS

84

SHIP REPAIRERS
GENERAL MACHINE WORK
ENGINEERING

MAIL PAYMENT TO:
P.O. BOX 4000-58
PORTLAND, OREGON 97208

INVOICE

M/V "Tropicale" & Owners
Carnival Cruise Lines
5225 N. W. 87th Avenue
Miami, FL 33166

DATE: Nov 30 ~~Dec. 1,~~ 1988
OUR JOB NO.: 3405
CUSTOMER'S ORDER NO.:
CONTRACT NO.:
INVOICE NO.: 3405-A
TERMS:

CUSTOMER CODE NUMBER: 001930

Duns No. 00-902-8580

M.V. "TROPICALE"

For furnishing labor, material, and equipment to accomplish services in accordance with attached specifications item no. 1 through 14.

TOTAL AMOUNT DUE THIS INVOICE: $117,044.00

Partial Cullery Net

PAST DUE PAYMENTS SHALL BEAR INTEREST AT THE HIGHEST LAWFUL RATE UNTIL REPAID, NOT TO EXCEED 1½% PER MONTH.

CORRESPONDENCE ADDRESS P.O. BOX 3109 PORTLAND, OREGON 97208 PHONE (503) 285-7557

NWMAR128275

NORTHWEST MARINE IRON WORKS

85

SHIP REPAIRERS
GENERAL MACHINE WORK
ENGINEERING

INVOICE

MAIL PAYMENT TO:
P.O. BOX 4000-58
PORTLAND, OREGON 97208

M/V "Tropicale" & Owners
Carnival Cruise Lines
5225 N. W. 87th Avenue
Miami, FL 33166

DATE: NOV 30 ~~Dec. 1,~~ 1988
OUR JOB NO.: 3405
CUSTOMER'S ORDER NO.:
CONTRACT NO.:
INVOICE NO.: 3405-B
TERMS:

CUSTOMER CODE NUMBER: 001930

Duns No. 00-902-8580

M.V. "TROPICALE"

For furnishing labor, material, and equipment to accomplish repairs in accordance with attached specifications item no. 1 through 3.

TOTAL AMOUNT DUE THIS INVOICE: $88,906.00

Partial Collect Net

PAST DUE PAYMENTS SHALL BEAR INTEREST AT THE HIGHEST LAWFUL RATE UNTIL REPAID, NOT TO EXCEED 1½% PER MONTH.

CORRESPONDENCE ADDRESS P.O. BOX 3109 PORTLAND, OREGON 97208 PHONE (503) 285-7557

NWMAR128276

NORTHWEST MARINE IRON WORKS

SHIP REPAIRERS
GENERAL MACHINE WORK
ENGINEERING

MAIL PAYMENT TO:
P.O. BOX 4000-58
PORTLAND, OREGON 97208

INVOICE

M/V "Tropicale" & Owners
Carnival Cruise Lines
5225 N. W. 87th Avenue
Miami, FL 33166

DATE: NOV 30 ~~Dec. 1,~~ 1988
OUR JOB NO.: 3405
CUSTOMER'S ORDER NO.:
CONTRACT NO.:
INVOICE NO.: 3405-C
TERMS:

CUSTOMER CODE NUMBER: 001930

Duns No. 00-902-8580

M.V. "TROPICALE"

For furnishing labor, material, and equipment to accomplish repairs in accordance with attached specifications item no. 1 through 45.

TOTAL AMOUNT DUE THIS INVOICE: $317,550.00

INTERNAL — POST ONLY 67550 —

250,000 ALREADY POSTED

Partial Collect Net

PAST DUE PAYMENTS SHALL BEAR INTEREST AT THE HIGHEST LAWFUL RATE UNTIL REPAID, NOT TO EXCEED 1½% PER MONTH.

CORRESPONDENCE ADDRESS P.O. BOX 3109 PORTLAND, OREGON 97208 PHONE (503) 285-7557

NWMAR128277

NORTHWEST MARINE IRON WORKS
INVOICES BY CALLEY

MONTH OF October 1988

CUSTOMER	SHIP	INVOICE DATE	INVOICE NUMBER	INVOICE AMOUNT	INVOICE PAYMENT DATE	COMMISSION PERCENT	COMMISSION AMOUNT	COMMISSION DATE PAID	COMMISSION CHECK NUMBER
Holland America	Noordam	10-17-88	3374	17,943.00	12-12-88	10%	1,794.30	12-16-88	266198
Chantiers De L'Atlantique		10-24-88	3110-V	1,500.00	10-26-88	10%	150.00		220499
"	"	"	3110-W	1,500.00	11-25-88	10%	150.00		
Corral Lines	Adele	10-24-88	3354-A	36,000.00	see Aug 88	—	—	—	—
Barber Wilhelmson	Renu Sagar	10-25-88	3423	26,522.00	10-27-88	10%	2500.00		220499
General Steamship	Sun Orchid	10-26-88	3422	12,462.00		10%	1,246.20	12/02/88	
Cascade Shipping	M/V Vertue	10-26-88	3427	1,796.50	3-16-89	10%	179.60	3/24/89	267134
General Steamship	Port Star	10-26-88	3426	6,267.00	11-25-88	10%	626.70	12/02/88	
Progress Electronics	Labor & material	10-26-88	3421	1,052.00		10%	-105.20	VOIDED w/CN.	
Nedlloyd	M/V Adele	10-28-88	3354-A	(5,226.25)					
General Steamship	M/V Sawako	10-28-88	3358-A	(700.00)					
Barber Wilhemsen	Renu Sagar	10-28-88	3423-A	(1,522.00)					
Progress Electronics	credit	10-28-88	3421	(1,052.00)					

pd only $25,000

X

NWMAR128278

1 3 3

NORTHWEST MARINE IRON WORKS

SHIP REPAIRERS
GENERAL MACHINE WORK
ENGINEERING

MAIL PAYMENT TO:
P.O. BOX 4000-58
PORTLAND, OREGON 97208

INVOICE

M/S "NOORDAM" and Owners
c/o Holland America Line.
300 Elliott Avenue West
Seattle, Washington 98119

DATE October 17, 1988
OUR JOB NO. 3374
CUSTOMER'S ORDER NO.
CONTRACT NO.
INVOICE NO. 3374
TERMS Net

CUSTOMER CODE NUMBER: 07203

Duns No. 00-902-8580

"M/S NOORDAM"

For furnishing labor, material and equipment to accomplish repairs in accordance with the attached specifications.

Total Amount Due This Invoice $17,943.00

Final
Calley
Net

PAST DUE PAYMENTS SHALL BEAR INTEREST AT THE HIGHEST LAWFUL RATE UNTIL REPAID, NOT TO EXCEED 1½% PER MONTH.

CORRESPONDENCE ADDRESS P.O. BOX 3109 PORTLAND, OREGON 97208 PHONE (503) 285-7557

NWMAR128279

NORTHWEST MARINE IRON WORKS

A1

SHIP REPAIRERS
GENERAL MACHINE WORK
ENGINEERING

MAIL PAYMENT TO:
P.O. BOX 4000-58
PORTLAND, OREGON 97208

INVOICE

Chantiers De L'Atlantique
Alshom-Atlantique
B. P. 400-44608
St. Nazaire, Cedex
FRANCE

DATE: Oct 24, 1988
OUR JOB NO.: 3110
CUSTOMER'S ORDER NO.:
CONTRACT NO.:
INVOICE NO.: 3110-V
TERMS: Net

CUSTOMER CODE NUMBER: 02119

Duns No. 00-902-8580

Warehouse charges for the main engine generator step-up gears, Ex-Noordam and Nieuw Amsterdam.

Charges for the month of October, 1988.

TOTAL AMOUNT DUE THIS INVOICE: $1,500.00

PARTIAL
CALLEY
NET

PAST DUE PAYMENTS SHALL BEAR INTEREST AT THE HIGHEST LAWFUL RATE UNTIL REPAID, NOT TO EXCEED 1½% PER MONTH.

CORRESPONDENCE ADDRESS P.O. BOX 3109 PORTLAND, OREGON 97208 PHONE (503) 285-7557

NWMAR128280

3321-B
pd 9-15

48

NORTHWEST MARINE IRON WORKS

SHIP REPAIRERS
GENERAL MACHINE WORK
ENGINEERING

MAIL PAYMENT TO:
P.O. BOX 4000-58
PORTLAND, OREGON 97208

INVOICE

Chantiers De L'Atlantique
Alshom-Atlantique
B. P. 400-44608
St. Nazaire, Cedex
FRANCE

DATE: Oct 24, 1988
OUR JOB NO.: 3110
CUSTOMER'S ORDER NO.:
CONTRACT NO.:
INVOICE NO.: 3110-W
TERMS: Net

CUSTOMER CODE NUMBER: 02119

Duns No. 00-902-8580

Warehouse charges for the main engine generator step-up gears, Ex-Noordam and Nieuw Amsterdam.

Charges for the month of November, 1988.

TOTAL AMOUNT DUE THIS INVOICE: $1,500.00

PARTIAL
CALLEV
NET

PAST DUE PAYMENTS SHALL BEAR INTEREST AT THE HIGHEST LAWFUL RATE UNTIL REPAID, NOT TO EXCEED 1½% PER MONTH.

CORRESPONDENCE ADDRESS P.O. BOX 3109 PORTLAND, OREGON 97208 PHONE (503) 285-7557

NWMAR128282

NORTHWEST MARINE IRON WORKS

SHIP REPAIRERS
GENERAL MACHINE WORK
ENGINEERING

MAIL PAYMENT TO:
P.O. BOX 4000-58
PORTLAND, OREGON 97208

INVOICE

M.S. "Adele"
Corral Lines ApS
P. O. Box 69
DK-6300 Graasten
Denmark

Attention: Sv. Aa. Sorensen

DATE	Oct. 24, 1988
OUR JOB NO.	3354
CUSTOMER'S ORDER NO.	
CONTRACT NO.	
INVOICE NO.	3354-A
TERMS	Net on Receipt of Invoice

CUSTOMER CODE NUMBER: 002705

Duns No. 00-902-8580

M.S. "ADELE"

To accomplish repairs on the subject vessel in accordance with specifications.

TOTAL NEGOTIATED PRICE: $36,000.00 U.S.D.

FINAL CALLEY NET

PAST DUE PAYMENTS SHALL BEAR INTEREST AT THE HIGHEST LAWFUL RATE UNTIL REPAID, NOT TO EXCEED 1½% PER MONTH.

CORRESPONDENCE ADDRESS P.O. BOX 3109 PORTLAND, OREGON 97208 PHONE (503) 285-7557

NWMAR128283

NORTHWEST MARINE IRON WORKS

✓ 55

SHIP REPAIRERS
GENERAL MACHINE WORK
ENGINEERING

MAIL PAYMENT TO:
P.O. BOX 4000-58
PORTLAND, OREGON 97208

INVOICE

M/V "RENU SAGAR" and Owners
c/o Barber Wilhelmson Agency
1750 N.W. Front Avenue, Suite 104
Portland, Oregon 97209-2530

DATE: October 25, 1988
OUR JOB NO.: 3423
CUSTOMER'S ORDER NO.:
CONTRACT NO.:
INVOICE NO.: 3423
TERMS: Net

CUSTOMER CODE NUMBER: 000888

Duns No. 00-902-8580

"M/V RENU SAGAR"

For furnishing labor, material, and equipment to accomplish repairs in accordance with the attached specifications.

Total Amount Due This Invoice $26,522.00

Final
Call key
Net

PAST DUE PAYMENTS SHALL BEAR INTEREST AT THE HIGHEST LAWFUL RATE UNTIL REPAID, NOT TO EXCEED 1½% PER MONTH.

CORRESPONDENCE ADDRESS P.O. BOX 3109 PORTLAND, OREGON 97208 PHONE (503) 285-7557

NWMAR128284

NORTHWEST MARINE IRON WORKS

57

SHIP REPAIRERS
GENERAL MACHINE WORK
ENGINEERING

MAIL PAYMENT TO:
P.O. BOX 4000-58
PORTLAND, OREGON 97208

INVOICE

M/V "SUN ORCHID" and Owners
c/o General Steamship Corporation
421 S.W. 6th Avenue, Suite 410
Portland, Oregon 97204

DATE	October 26, 1988
OUR JOB NO.	3422
CUSTOMER'S ORDER NO.	
CONTRACT NO.	
INVOICE NO.	3422
TERMS	Net

CUSTOMER CODE NUMBER: 006200

Duns No. 00-902-8580

"M/V SUN ORCHID"

For furnishing labor, material, and equipment to accomplish repairs in accordance with the attached specifications.

Total Amount Due This Invoice $12,462.00

==========

Final
Carley
Net

PAST DUE PAYMENTS SHALL BEAR INTEREST AT THE HIGHEST LAWFUL RATE UNTIL REPAID, NOT TO EXCEED 1½% PER MONTH.

CORRESPONDENCE ADDRESS P.O. BOX 3109 PORTLAND, OREGON 97208 PHONE (503) 285-7557

NWMAR128285

NORTHWEST MARINE IRON WORKS

✓ 58

SHIP REPAIRERS
GENERAL MACHINE WORK
ENGINEERING

MAIL PAYMENT TO:
P.O. BOX 4000-58
PORTLAND, OREGON 97208

INVOICE

M/V "VIRTUE" and Owners
c/o Cascade Shipping Company
806 S.W. Broadway, Suite 550
Portland, Oregon 97205

DATE	October 26, 1988
OUR JOB NO.	3427
CUSTOMER'S ORDER NO.	
CONTRACT NO.	
INVOICE NO.	3427
TERMS	Net

CUSTOMER CODE NUMBER: 001948

Duns No. 00-902-8580

"M/V VIRTUE"

For furnishing labor, material, and equipment to accomplish repairs in accordance with the attached specifications.

Total Amount Due This Invoice $1,796.50
=========

FINAL
Calley
Net

PAST DUE PAYMENTS SHALL BEAR INTEREST AT THE HIGHEST LAWFUL RATE UNTIL REPAID, NOT TO EXCEED 1½% PER MONTH.

CORRESPONDENCE ADDRESS P.O. BOX 3109 PORTLAND, OREGON 97208 PHONE (503) 285-7557

59

NORTHWEST MARINE IRON WORKS

SHIP REPAIRERS
GENERAL MACHINE WORK
ENGINEERING

MAIL PAYMENT TO:
P.O. BOX 4000-58
PORTLAND, OREGON 97208

INVOICE

M/V "PORT STAR" and Owners
c/o General Steamship Corporation
421 S.W. 6th Avenue, Suite 410
Portland, Oregon 97204

DATE	October 26, 1988
OUR JOB NO.	3426
CUSTOMER'S ORDER NO.	
CONTRACT NO.	
INVOICE NO.	3426
TERMS	Net

CUSTOMER CODE NUMBER: 006200

Duns No. 00-902-8580

"M/V PORT STAR"

For furnishing labor, material, and equipment to accomplish repairs in accordance with the attached specifications.

Total Amount Due This Invoice $6,267.00
=========

FINAL
Calley
Net

PAST DUE PAYMENTS SHALL BEAR INTEREST AT THE HIGHEST LAWFUL RATE UNTIL REPAID, NOT TO EXCEED 1½% PER MONTH.

CORRESPONDENCE ADDRESS P.O. BOX 3109 PORTLAND, OREGON 97208 PHONE (503) 285-7557

60 ✓

NORTHWEST MARINE IRON WORKS

SHIP REPAIRERS
GENERAL MACHINE WORK
ENGINEERING

MAIL PAYMENT TO:
P.O. BOX 4000-58
PORTLAND, OREGON 97208

INVOICE

Progess Electronic Company
2725 N.E. Columbia Blvd.
Portland, Oregon 9721119

DATE: October 26, 1988
OUR JOB NO.: 34~~3~~1
CUSTOMER'S ORDER NO.: 2
CONTRACT NO.: 7
INVOICE NO.: 34~~3~~1
TERMS: Net

CUSTOMER CODE NUMBER: 021926

Duns No. 00-902-8580

For furnishing labor, material and equipment to accomplish repairs in accordance with the attached specifications.

Total Amount Due This Invoice $1,052.00
==========

FINAL
~~PARTIAL~~
~~PAID~~ Calley
Net

PAST DUE PAYMENTS SHALL BEAR INTEREST AT THE HIGHEST LAWFUL RATE UNTIL REPAID, NOT TO EXCEED 1½% PER MONTH.

CORRESPONDENCE ADDRESS P.O. BOX 3109 PORTLAND, OREGON 97208 PHONE (503) 285-7557

NWMAR128288

NORTHWEST MARINE IRON WORKS

✓ 64

SHIP REPAIRERS
GENERAL MACHINE WORK
ENGINEERING

MAIL PAYMENT TO:
P.O. BOX 4000-58
PORTLAND, OREGON 97208

INVOICE

M/V Adele and Owners
c/o Nedlloyd
200 S. W. Market Street, Suite 1010
Porttland, OR 97201

DATE October 28, 1988
OUR JOB NO. 3354
CUSTOMER'S ORDER NO.
CONTRACT NO.
INVOICE NO. 3354-A
TERMS Net

CUSTOMER CODE NUMBER: 14200

Duns No. 00-902-8580

INTERNAL ONLY

M/V ADELE

To credit invoice for negotiated amount.	($5,226.25)
TOTAL CREDIT DUE:	($5,226.25)

Credit O'Rourke

PAST DUE PAYMENTS SHALL BEAR INTEREST AT THE HIGHEST LAWFUL RATE UNTIL REPAID, NOT TO EXCEED 1½% PER MONTH.

CORRESPONDENCE ADDRESS P.O. BOX 3109 PORTLAND, OREGON 97208 PHONE (503) 285-7557

65

NORTHWEST MARINE IRON WORKS

SHIP REPAIRERS
GENERAL MACHINE WORK
ENGINEERING

INVOICE

MAIL PAYMENT TO:
P.O. BOX 4000-58
PORTLAND, OREGON 97208

M/V Sawako amd Owners
c/o General Steamship Corp.
421 S. W. 6th Avenue, Suite 410
Portland, OR 97204

DATE October 28, 1988
OUR JOB NO. 3358
CUSTOMER'S ORDER NO.
CONTRACT NO.
INVOICE NO. 3358-A
TERMS Net

CUSTOMER CODE NUMBER: 006200

Duns No. 00-902-8580

INTERNAL ONLY

M/V SAWAKO

To credit invoice for negotiated amount.	($700.00)
TOTAL CREDIT DUE:	($700.00)

Credit O'Rourke

PAST DUE PAYMENTS SHALL BEAR INTEREST AT THE HIGHEST LAWFUL RATE UNTIL REPAID, NOT TO EXCEED 1½% PER MONTH.

CORRESPONDENCE ADDRESS P.O. BOX 3109 PORTLAND, OREGON 97208 PHONE (503) 285-7557

NWMAR128290

NORTHWEST MARINE IRON WORKS

SHIP REPAIRERS
GENERAL MACHINE WORK
ENGINEERING

MAIL PAYMENT TO:
P.O. BOX 4000-58
PORTLAND, OREGON 97208

INVOICE

Barber Wilhemsen Agency
1750 N. W. Front Street
Portland, Oregon 97209

DATE October 28, 1988
OUR JOB NO. 3423
CUSTOMER'S ORDER NO.
CONTRACT NO.
INVOICE NO. 3423-A
TERMS Net

CUSTOMER CODE NUMBER: 00888

Duns No. 00-902-8580

INTERNAL ONLY

To credit early payment discount	($1,522.00)
TOTAL CREDIT DUE:	($1,522.00)

Credit O'Rourke

PAST DUE PAYMENTS SHALL BEAR INTEREST AT THE HIGHEST LAWFUL RATE UNTIL REPAID, NOT TO EXCEED 1½% PER MONTH.

CORRESPONDENCE ADDRESS P.O. BOX 3109 PORTLAND, OREGON 97208 PHONE (503) 285-7557

NWMAR128291

NORTHWEST MARINE IRON WORKS

SHIP REPAIRERS
GENERAL MACHINE WORK
ENGINEERING

MAIL PAYMENT TO:
P.O. BOX 4000-58
PORTLAND, OREGON 97208

INVOICE

Progress Electronics
2725 N. E. Columbia Blvd.
Portland, OR 97211

DATE October 28, 1988
OUR JOB NO. 343
CUSTOMER'S ORDER NO. P.O. #58849
CONTRACT NO.
INVOICE NO. 341
TERMS Net

CUSTOMER CODE NUMBER: 21926

Duns No. 00-902-8580

CREDIT MEMO

To credit for amounts invoiced twice	($1,052.00)
TOTAL CREDIT DUE:	($1,052.00)

Credit
O'Rourke

PAST DUE PAYMENTS SHALL BEAR INTEREST AT THE HIGHEST LAWFUL RATE UNTIL REPAID, NOT TO EXCEED 1½% PER MONTH.

CORRESPONDENCE ADDRESS P.O. BOX 3109 PORTLAND, OREGON 97208 PHONE (503) 285-7557

NWMAR128292

NORTHWEST MARINE IRON WORKS
INVOICES BY CALLEY

MONTH OF September 1988

CUSTOMER	SHIP	INVOICE DATE	INVOICE NUMBER	INVOICE AMOUNT	INVOICE PAYMENT DATE	COMMISSION PERCENT	COMMISSION AMOUNT	COMMISSION DATE PAID	COMMISSION CHECK NUMBER
Holland America	Nieuw Amsterdam	9/9/88	3389	48,902.00	10-31-88	10%	4,890.00	11-14-88	266256
Merit Steamship	Sea Grace	9/13/88	3399	5,485.00	11-4-88	10%	548.50	11-14-88	266256
Kerr Steamship	Diamond Azalea	9/14/88	3410	523.00	10-24-88	10%	52.30	10-28-88	220499
Kerr Steamship	Rio Purus	9/15/88	3403	379.00	11-7-88	10%	37.90	11-14-88	266256
EAC Steamship	Asean Glory	9/15/88	3407	4,047.00	10/5/88	10%	404.70	10-14-88	220496
Merit Steamship	Green Cedar	9/15/88	3408	6,030.00	12/12/88	10%	603.00	12-16-88	266198
Progress Electronics	Hansa Mariner	9/30/88	3412	186.00	2/7/89	10%	18.60	2-8-89	267107
Natco	Padre Island	9/30/88	3415	804.00	10-28-88	10%	80.40	10-28-88	220499
Fritz Maritime	Ocean Lucky	9/30/88	3417	11,338.00	10-24-88	10%	1,133.80	10-28-88	220499
Sunrise Shipping	Protagonist II	9/30/88	3413	5,079.00	11-02-88	10%	507.90	11-14-88	266256
General Steamship	Finn Falcon	9/30/88	3414	2,576.00	10/12/88	10%	257.60	10-14-88	220496

X

NWMAR128293

8

NORTHWEST MARINE IRON WORKS

SHIP REPAIRERS
GENERAL MACHINE WORK
ENGINEERING

MAIL PAYMENT TO:
P.O. BOX 4000-58
PORTLAND, OREGON 97208

INVOICE

M/S "Nieuw Amsterdam" and Owner
c/o Holland America Line
Elliott Bay Office Park
300 Elliott Avenue West
Seattle, Washington 98119

DATE September 9, 1988
OUR JOB NO. 3389
CUSTOMER'S ORDER NO.
CONTRACT NO.
INVOICE NO. 3389
TERMS Net

CUSTOMER CODE NUMBER: 007203

Duns No. 00-902-8580

M/S "Nieuw Amsterdam"

To accomplish repairs on subject vessel in accordance with specification.

Total Amount Due This Invoice $48,902.00

Dual Calley Net

PAST DUE PAYMENTS SHALL BEAR INTEREST AT THE HIGHEST LAWFUL RATE UNTIL REPAID, NOT TO EXCEED 1½% PER MONTH.

CORRESPONDENCE ADDRESS P.O. BOX 3109 PORTLAND, OREGON 97208 PHONE (503) 285-7557

NWMAR128294

34 V

NORTHWEST MARINE IRON WORKS

SHIP REPAIRERS
GENERAL MACHINE WORK
ENGINEERING

MAIL PAYMENT TO:
P.O. BOX 4000-58
PORTLAND, OREGON 97208

INVOICE

M/V "SEA GRACE" and Owners
c/o Merit Steamship Agency
101 S.W. Main
Portland, Oregon 97204

DATE September 13, 1988
OUR JOB NO. 3399
CUSTOMER'S ORDER NO.
CONTRACT NO.
INVOICE NO. 3399
TERMS Net

CUSTOMER CODE NUMBER: 012690

Duns No. 00-902-8580

"M/V SEA GRACE"

For furnishing labor, material, and equipment to accomplish repairs in accordance with the attached specifications.

Total Amount Due This Invoice $5,485.00

Final Calley net

PAST DUE PAYMENTS SHALL BEAR INTEREST AT THE HIGHEST LAWFUL RATE UNTIL REPAID, NOT TO EXCEED 1½% PER MONTH.

CORRESPONDENCE ADDRESS P.O. BOX 3109 PORTLAND, OREGON 97208 PHONE (503) 285-7557

NWMAR128295

NORTHWEST MARINE IRON WORKS

SHIP REPAIRERS
GENERAL MACHINE WORK
ENGINEERING

MAIL PAYMENT TO:
P.O. BOX 4000-58
PORTLAND, OREGON 97208

INVOICE

M/V "DIAMOND AZALEA" and Owners
c/o Kerr Steamship Company, Inc.
One S.W. Columbia, Suite 450
Portland, Oregon 97258

DATE	September 14, 1988
OUR JOB NO.	3410
CUSTOMER'S ORDER NO.	
CONTRACT NO.	
INVOICE NO.	3410
TERMS	Net

CUSTOMER CODE NUMBER: 009440

Duns No. 00-902-8580

"M/V DIAMOND AZALEA"

For furnishing labor, material, and equipment to accomplish repairs in accordance with the attached specifications.

Total Amount Due This Invoice $523.00

F.W.M
Colley
Net

PAST DUE PAYMENTS SHALL BEAR INTEREST AT THE HIGHEST LAWFUL RATE UNTIL REPAID, NOT TO EXCEED 1½% PER MONTH.

CORRESPONDENCE ADDRESS P.O. BOX 3109 PORTLAND, OREGON 97208 PHONE (503) 285-7557

NORTHWEST MARINE IRON WORKS

31 V

SHIP REPAIRERS
GENERAL MACHINE WORK
ENGINEERING

MAIL PAYMENT TO:
P.O. BOX 4000-58
PORTLAND, OREGON 97208

INVOICE

M/V "RIO PURUS" and Owners
c/o Kerr Steamship
1 S.W. Columbia Avenue, Suite 450
Portland, Oregon 97258

DATE September 15, 1988
OUR JOB NO. 3403
CUSTOMER'S ORDER NO.
CONTRACT NO.
INVOICE NO. 3403
TERMS Net

CUSTOMER CODE NUMBER: 009440

Duns No. 00-902-8580

"M/V RIO PURUS"

For furnishing labor, material, and equipment to accomplish repairs in accordance with the attached specifications.

Total Amount Due This Invoice $379.00
==========

Final
Carley
Nov

PAST DUE PAYMENTS SHALL BEAR INTEREST AT THE HIGHEST LAWFUL RATE UNTIL REPAID, NOT TO EXCEED 1½% PER MONTH.

CORRESPONDENCE ADDRESS P.O. BOX 3109 PORTLAND, OREGON 97208 PHONE (503) 285-7557

30 ✓

NORTHWEST MARINE IRON WORKS

SHIP REPAIRERS
GENERAL MACHINE WORK
ENGINEERING

MAIL PAYMENT TO:
P.O. BOX 4000-58
PORTLAND, OREGON 97208

INVOICE

M/V "ASEAN GLORY" and Owners
c/o EAC Steamship Agency
1300 S.W. 5th Avenue, Suite 2328
Portland, Oregon 97201

DATE	September 15, 1988
OUR JOB NO.	3407
CUSTOMER'S ORDER NO.	
CONTRACT NO.	
INVOICE NO.	3407
TERMS	Net

CUSTOMER CODE NUMBER: 004280

Duns No. 00-902-8560

"M/V ASEAN GLORY"

For furnishing labor, material, and equipment to accomplish repairs in accordance with the attached specifications.

Total Amount Due This Invoice $4,047.00

==========

FINAL
CHECK
NET

PAST DUE PAYMENTS SHALL BEAR INTEREST AT THE HIGHEST LAWFUL RATE UNTIL REPAID, NOT TO EXCEED 1½% PER MONTH.

CORRESPONDENCE ADDRESS P.O. BOX 3109 PORTLAND, OREGON 97208 PHONE (503) 285-7557

NWMAR128298

NORTHWEST MARINE IRON WORKS

29 ✓

SHIP REPAIRERS
GENERAL MACHINE WORK
ENGINEERING

MAIL PAYMENT TO:
P.O. BOX 4000-58
PORTLAND, OREGON 97208

INVOICE

M/V "GREEN CEDAR" and Owners
c/o Merit Steamship Agency
101 S.W. Main Street
Portland, Oregon 97204

DATE	September 15, 1988
OUR JOB NO.	3408
CUSTOMER'S ORDER NO.	
CONTRACT NO.	
INVOICE NO.	3408
TERMS	Net

CUSTOMER CODE NUMBER: 012690

Duns No. 00-902-8580

"M/V GREEN CEDAR"

For furnishing labor, material, and equipment to accomplish repairs in accordance with the attached specifications.

Total Amount Due This Invoice $6,030.00
==========

Final
Calley
Wed

PAST DUE PAYMENTS SHALL BEAR INTEREST AT THE HIGHEST LAWFUL RATE UNTIL REPAID, NOT TO EXCEED 1½% PER MONTH.

CORRESPONDENCE ADDRESS P.O. BOX 3109 PORTLAND, OREGON 97208 PHONE (503) 285-7557

74

NORTHWEST MARINE IRON WORKS

SHIP REPAIRERS
GENERAL MACHINE WORK
ENGINEERING

MAIL PAYMENT TO:
P.O. BOX 4000-58
PORTLAND, OREGON 97208

INVOICE

M/V "HANSA MARINER" and Owners
c/o Progress Electronics
5160 N. Lagoon
Portland, Oregon 97217

DATE September 30, 1988
OUR JOB NO. 3412
CUSTOMER'S ORDER NO.
CONTRACT NO.
INVOICE NO. 3412
TERMS Net

CUSTOMER CODE NUMBER: 021926

Duns No. 00-902-8580

"M/V HANSA MARINER"

For furnishing labor, material, and equipment to accomplish repairs in accordance with the attached specifications.

Total Amount Due This Invoice $186.00
=======

Net
Calley
Final

PAST DUE PAYMENTS SHALL BEAR INTEREST AT THE HIGHEST LAWFUL RATE UNTIL REPAID, NOT TO EXCEED 1½% PER MONTH.

CORRESPONDENCE ADDRESS P.O. BOX 3109 PORTLAND, OREGON 97208 PHONE (503) 285-7557

NWMAR128300

25

NORTHWEST MARINE IRON WORKS

SHIP REPAIRERS
GENERAL MACHINE WORK
ENGINEERING

MAIL PAYMENT TO:
P.O. BOX 4000-58
PORTLAND, OREGON 97208

INVOICE

M/V "PADRE ISLAND" and Owners
c/o NATCO
1 North 6th Street
Astoria, Oregon 97103

DATE	September 30, 1988
OUR JOB NO.	3415
CUSTOMER'S ORDER NO.	
CONTRACT NO.	
INVOICE NO.	3415
TERMS	Net

CUSTOMER CODE NUMBER: 014090

Duns No. 00-902-8580

"M/V PADRE ISLAND"

For furnishing labor, material, and equipment to accomplish repairs in accordance with the attached specifications.

Total Amount Due This Invoice $804.00
=======

Net
Cullen
Final

PAST DUE PAYMENTS SHALL BEAR INTEREST AT THE HIGHEST LAWFUL RATE UNTIL REPAID, NOT TO EXCEED 1½% PER MONTH.

CORRESPONDENCE ADDRESS P.O. BOX 3109 PORTLAND, OREGON 97208 PHONE (503) 285-7557

76

NORTHWEST MARINE IRON WORKS

SHIP REPAIRERS
GENERAL MACHINE WORK
ENGINEERING

MAIL PAYMENT TO:
P.O. BOX 4000-58
PORTLAND, OREGON 97208

INVOICE

M/V "OCEAN LUCKY " and Owners
c/o Fritz Maritime Agencies, Inc.
P.O. Box 2964
Portland, Oregon 97208

DATE	September 30, 1988
OUR JOB NO.	3417
CUSTOMER'S ORDER NO.	
CONTRACT NO.	
INVOICE NO.	3417
TERMS	Net

CUSTOMER CODE NUMBER: 005065

Duns No. 00-902-8580

"M/V OCEAN LUCKY"

For furnishing labor, material, and equipment to accomplish repairs in accordance with the attached specifications.

Total Amount Due This Invoice $11,338.00

==========

Net
Calley
Final

PAST DUE PAYMENTS SHALL BEAR INTEREST AT THE HIGHEST LAWFUL RATE UNTIL REPAID, NOT TO EXCEED 1½% PER MONTH.

CORRESPONDENCE ADDRESS P.O. BOX 3109 PORTLAND, OREGON 97208 PHONE (503) 285-7557

77

NORTHWEST MARINE IRON WORKS

SHIP REPAIRERS
GENERAL MACHINE WORK
ENGINEERING

MAIL PAYMENT TO:
P.O. BOX 4000-58
PORTLAND, OREGON 97208

INVOICE

M/V "PROTAGONIST II" and Owners
c/o Sunrise Shipping Agency
1515 S.W. 5th Avenue, Suite 820
Portland, Oregon 97201

DATE September 30, 1988
OUR JOB NO. 3413
CUSTOMER'S ORDER NO.
CONTRACT NO.
INVOICE NO. 3413
TERMS Net

CUSTOMER CODE NUMBER: 029150

Duns No. 00-902-8580

"M/V PROTAGONIST II"

For furnishing labor, material, and equipment to accomplish repairs in accordance with the attached specifications.

Total Amount Due This Invoice $5,079.00

Net
Calley
Omal

PAST DUE PAYMENTS SHALL BEAR INTEREST AT THE HIGHEST LAWFUL RATE UNTIL REPAID, NOT TO EXCEED 1½% PER MONTH.

CORRESPONDENCE ADDRESS P.O. BOX 3109 PORTLAND, OREGON 97208 PHONE (503) 285-7557

NWMAR128303

78

NORTHWEST MARINE IRON WORKS

SHIP REPAIRERS
GENERAL MACHINE WORK
ENGINEERING

MAIL PAYMENT TO:
P.O. BOX 4000-58
PORTLAND, OREGON 97208

INVOICE

M/V "FINN FALCON" and Owners
c/o General Steamship Corporation
421 S.W. 6th Street, Suite 410
Portland, Oregon 97204

DATE	September 30, 1988
OUR JOB NO.	3414
CUSTOMER'S ORDER NO.	
CONTRACT NO.	
INVOICE NO.	3414
TERMS	Net

CUSTOMER CODE NUMBER: 006200

Duns No. 00-902-8580

"M/V FINN FALCON"

For furnishing labor, material, and equipment to accomplish repairs in accordance with the attached specifications.

Total Amount Due This Invoice $2,576.00

Net
Colley
Final

PAST DUE PAYMENTS SHALL BEAR INTEREST AT THE HIGHEST LAWFUL RATE UNTIL REPAID, NOT TO EXCEED 1½% PER MONTH.

CORRESPONDENCE ADDRESS P.O. BOX 3109 PORTLAND, OREGON 97208 PHONE (503) 285-7557

NORTHWEST MARINE IRON WORKS
INVOICES BY CALLEY

MONTH OF August 1988

CUSTOMER	SHIP	INVOICE DATE	INVOICE NUMBER	INVOICE AMOUNT	INVOICE PAYMENT DATE	COMMISSION PERCENT	COMMISSION AMOUNT	COMMISSION DATE PAID	COMMISSION CHECK NUMBER
Sunrise Shipping	M/V Alnoor	8/4/88	3387	1,022.28	9-2-88	10%	102.20	9-15-88	220493
Nedlloyd	M/V Adele	8/5/88	3354	~~41,226.25~~ 36,000.00*	8-28-88	10%	3600.00	9-15-88	220493
International Shipping	Gerry Belle	8/4/88	3377	3,497.00	10-6-88	10%	349.70	10-14-88	220496
Norton, Lilly & Co	C. S. Northern	8/3/88	3351	5,868.00	9-23-88	10%	586.80	9-30-88	220494
Hyundai Merchant Marine	M/V Hai Soo	8/10/88	3382	5,295.00	2-13-89	10%	529.50	2-21-89	267116
Sun Enterprises	Finnbeamer	8/12/88	3373	8,363.00	9-16-88	10%	836.30	9-30-88	220494
Holland America	Rotterdam	8/17/88	3372	23,473.00	9-29-88	10%	2,347.30	9-30-88	220494
Chantiers De L'Atlantique	Nieuw Amsterdam Noordam	8/17/88	3110-T	1,500.00	9-27-88	10%	150.00	9-30-88	220494
Star Shipping	Star Grainger	8/22/88	3379	548.00	8-22-88	10%	54.80	9-15-88	220493
Barber Wilhelmsen	Dad America	8/23/88	3395	1,531.00	9-30-88	10%	153.10	10-14-88	220496
Exploration Cruises	Colonial Explorer	8/23/88	3393	1,009.45		10%	100.95		
Cascade Shipping	Sunko Prelude	8/23/88	3392	2,333.00	9-30-88	10%	233.30	10-14-88	220496
Sunrise Shipping	Farpous III	8/26/88	3398	3,258.00	2-21-89	10%	325.80	3-07-89	267125
International Shipping Corp	Green Ridge	8/26/88	3349	390.00	12/7/88	10%	39.00	12-16-88	266198

w/o $1,009.45 6/20/90

NWMAR128305

17

NORTHWEST MARINE IRON WORKS

SHIP REPAIRERS
GENERAL MACHINE WORK
ENGINEERING

MAIL PAYMENT TO:
P.O. BOX 4000-58
PORTLAND, OREGON 97208

INVOICE

M/V "Alnoor" and Owners
c/o Sunrise Shipping Agency
1515 S.W. 5th Avenue
Portland, Oregon 97201

DATE	August 4, 1988
OUR JOB NO.	3387
CUSTOMER'S ORDER NO.	
CONTRACT NO.	
INVOICE NO.	3387
TERMS	Net on Receipt of Invoice

CUSTOMER CODE NUMBER: 029150

Duns No. 00-902-8580

"M/V Alnoor"

To accomplish repairs on subject vessels in accordance with specifications.

Total Amount Due This Invoice $1,022.28

Not Calley Final

PAST DUE PAYMENTS SHALL BEAR INTEREST AT THE HIGHEST LAWFUL RATE UNTIL REPAID, NOT TO EXCEED 1½% PER MONTH

CORRESPONDENCE ADDRESS P.O. BOX 3109 PORTLAND, OREGON 97208 PHONE (503) 285-7557

NWMAR128306

NORTHWEST MARINE IRON WORKS

19

SHIP REPAIRERS
GENERAL MACHINE WORK
ENGINEERING

MAIL PAYMENT TO:
P.O. BOX 4000-58
PORTLAND, OREGON 97208

INVOICE

M/V "Adele" and Owners
c/o Nedlloyd
200 S.W. Market, Ste 1010
Portland, Oregon 97201

DATE August 5, 1988
OUR JOB NO. 3354
CUSTOMER'S ORDER NO.
CONTRACT NO.
INVOICE NO. 3354
TERMS Net on Receipt of Invoice

INTERNAL USE ONLY

CUSTOMER CODE NUMBER: 14200

Duns No. 00-902-8580

"M/V Adele"

To accomplish repairs on subject vessels in accordance with specifications.

Total Amount Due This Invoice $41,226.25 U.S.D.

Final Calling Net

PAST DUE PAYMENTS SHALL BEAR INTEREST AT THE HIGHEST LAWFUL RATE UNTIL REPAID, NOT TO EXCEED 1½% PER MONTH.

CORRESPONDENCE ADDRESS P.O. BOX 3109 PORTLAND, OREGON 97208 PHONE (503) 285-7557

NWMAR128307

NORTHWEST MARINE IRON WORKS

18

SHIP REPAIRERS
GENERAL MACHINE WORK
ENGINEERING

MAIL PAYMENT TO:
P.O. BOX 4000-58
PORTLAND, OREGON 97208

INVOICE

M/V "Glory Belle" and Owners
c/o International Shipping Company
421 S.W. 6th Avenue
Portland, Oregon 97205

DATE August 4, 1988
OUR JOB NO. 3377
CUSTOMER'S ORDER NO.
CONTRACT NO.
INVOICE NO. 3377
TERMS Net on Receipt of Invoice

CUSTOMER CODE NUMBER: 008520

Duns No. 00-902-8580

"M/V Glory Belle"

To accomplish repairs on subject vessels in accordance with specifications.

Total Amount Due This Invoice $3,497.00

Dan a
Colly
Net

PAST DUE PAYMENTS SHALL BEAR INTEREST AT THE HIGHEST LAWFUL RATE UNTIL REPAID, NOT TO EXCEED 1½% PER MONTH.

CORRESPONDENCE ADDRESS P.O. BOX 3109 PORTLAND, OREGON 97208 PHONE (503) 285-7557

NWMAR128308

21

NORTHWEST MARINE IRON WORKS

SHIP REPAIRERS
GENERAL MACHINE WORK
ENGINEERING

MAIL PAYMENT TO:
P.O. BOX 4000-58
PORTLAND, OREGON 97208

INVOICE

M/V "C.S. NORTHERN" and Owners
c/o Norton, Lilly & Company Inc.
200 S.W. Market, Ste 860
Portland, Oregon 97201

DATE: ~~June 29, 1988~~ Aug 3
OUR JOB NO.: 3351
CUSTOMER'S ORDER NO.:
CONTRACT NO.:
INVOICE NO.: 3351
TERMS: Net on Receipt of Invoice

CUSTOMER CODE NUMBER: 051528

Duns No. 00-902-8580

"M/V C. S. Northern"

To accomplish repairs on subject vessels in accordance with specifications.

Total Amount Due This Invoice $5,868.00

FINAL
Calley
Net

PAST DUE PAYMENTS SHALL BEAR INTEREST AT THE HIGHEST LAWFUL RATE UNTIL REPAID, NOT TO EXCEED 1½% PER MONTH.

CORRESPONDENCE ADDRESS P.O. BOX 3109 PORTLAND, OREGON 97208 PHONE (503) 285-7557

NWMAR128309

25

NORTHWEST MARINE IRON WORKS

SHIP REPAIRERS
GENERAL MACHINE WORK
ENGINEERING

MAIL PAYMENT TO:
P.O. BOX 4000-58
PORTLAND, OREGON 97208

INVOICE

M/V "HAI SOO" and Owners
c/o Hyundai Merchant Marine., Inc.
1515 S.W. 5th Avenue, Suite 1050
Portland, Oregon 97201

DATE August 10, 1988
OUR JOB NO. 3382
CUSTOMER'S ORDER NO.
CONTRACT NO.
INVOICE NO. 3382
TERMS Net on Receipt of Invoice

CUSTOMER CODE NUMBER: 007772

Duns No 00-902-8580

"M/V HAI SOO"

To accomplish repairs on subject vessels in accordance with specifications.

Total Amount Due This Invoice $5,295.00
=========

Donald Colley
Rec'd

PAST DUE PAYMENTS SHALL BEAR INTEREST AT THE HIGHEST LAWFUL RATE UNTIL REPAID, NOT TO EXCEED 1½% PER MONTH

CORRESPONDENCE ADDRESS P.O. BOX 3109 PORTLAND, OREGON 97208 PHONE (503) 285-7557

NWMAR128310

NORTHWEST MARINE IRON WORKS

SHIP REPAIRERS
GENERAL MACHINE WORK
ENGINEERING

MAIL PAYMENT TO:
P.O. BOX 4000-58
PORTLAND, OREGON 97208

INVOICE

M/V "FINNBEAVER" and Owners
c/o Sun Enterprises, Ltd.
47/49 Akti Miaouli
P.O. Box 80062
18510 Piraeus, Greece

DATE August 12, 1988
OUR JOB NO. 3373
CUSTOMER'S ORDER NO.
CONTRACT NO.
INVOICE NO. 3373
TERMS Net on Receipt of Invoice

CUSTOMER CODE NUMBER: 000950

Duns No. 00-902-8580

"M/V FINNBEAVER"

To accomplish repairs on subject vessels in accordance with specifications.

Total Amount Due This Invoice $8,363.00
=========

Net
Calley
Final

PAST DUE PAYMENTS SHALL BEAR INTEREST AT THE HIGHEST LAWFUL RATE UNTIL REPAID, NOT TO EXCEED 1½% PER MONTH.

CORRESPONDENCE ADDRESS P.O. BOX 3109 PORTLAND, OREGON 97208 PHONE (503) 285-7557

NWMAR128311

43

NORTHWEST MARINE IRON WORKS

SHIP REPAIRERS
GENERAL MACHINE WORK
ENGINEERING

MAIL PAYMENT TO:
P.O. BOX 4000-58
PORTLAND, OREGON 97208

INVOICE

S/S "ROTTERDAM" and Owners
c/o Holland America Line
300 Elliott Avenue West
Seattle, WA 98118

DATE August 17, 1988
OUR JOB NO. 3372
CUSTOMER'S ORDER NO.
CONTRACT NO.
INVOICE NO. 3372
TERMS Net on Receipt of Invoice

CUSTOMER CODE NUMBER: 07203

Duns No. 00-902-8580

"S/S ROTTERDAM"

For furnishing labor, material, and equipment to accomplish repairs in accordance with the attached specification.

AMOUNT DUE THIS INVOICE $23,473.00

Final Collect Net

PAST DUE PAYMENTS SHALL BEAR INTEREST AT THE HIGHEST LAWFUL RATE UNTIL REPAID, NOT TO EXCEED 1½% PER MONTH.

CORRESPONDENCE ADDRESS P.O. BOX 3109 PORTLAND, OREGON 97208 PHONE (503) 285-7557

NWMAR128312

NORTHWEST MARINE IRON WORKS

41

SHIP REPAIRERS
GENERAL MACHINE WORK
ENGINEERING

MAIL PAYMENT TO:
P.O. BOX 4000-58
PORTLAND, OREGON 97208

INVOICE

Chantiers De L'Atlantique
Alshom-Atlantique
B. P. 400-44608
St. Nazaire, Cedex
FRANCE

DATE	Aug 17, 1988
OUR JOB NO.	3110
CUSTOMER'S ORDER NO.	
CONTRACT NO.	
INVOICE NO.	3110-T
TERMS	Net

CUSTOMER CODE NUMBER: 02119

Duns No. 00-902-8580

Warehouse charges for the main engine generator step-up gears, Ex-Noordam and Nieuw Amsterdam.

Charges for the month of August, 1988.

TOTAL AMOUNT DUE THIS INVOICE: $1,500.00

Partial Collect Net

PAST DUE PAYMENTS SHALL BEAR INTEREST AT THE HIGHEST LAWFUL RATE UNTIL REPAID, NOT TO EXCEED 1½% PER MONTH.

CORRESPONDENCE ADDRESS P.O. BOX 3109 PORTLAND, OREGON 97208 PHONE (503) 285-7557

NWMAR128313

NORTHWEST MARINE IRON WORKS

60

SHIP REPAIRERS
GENERAL MACHINE WORK
ENGINEERING

MAIL PAYMENT TO:
P.O. BOX 4000-58
PORTLAND, OREGON 97208

INVOICE

M/V "Star Geiranger" and Owners
c/o Star Shipping Company
Oregon Pioneer Building
320 S.W. Stark
Portland, Oregon 97204

DATE: ~~July 29, 1988~~ AUG 22, 1988
OUR JOB NO.: 3379
CUSTOMER'S ORDER NO.:
CONTRACT NO.:
INVOICE NO.: 3379
TERMS: Net on Receipt of Invoice

CUSTOMER CODE NUMBER: 028470

Duns No. 00-302-8580

"M/V Star Geiranger"

To accomplish repairs on subject vessels in accordance with specifications and negotiations.

Total Amount Due This Invoice $ 548.00

STAR SHIPPING (U.S.W.C.) INC.
SHIP STAR GEIRANGER
VOYAGE 488 B.C. 12
ACCOUNT
APPROVED [illegible] 3/3/88

PAST DUE PAYMENTS SHALL BEAR INTEREST AT THE HIGHEST LAWFUL RATE UNTIL REPAID, NOT TO EXCEED 1½% PER MONTH

CORRESPONDENCE ADDRESS P.O. BOX 3109 PORTLAND, OREGON 97208 PHONE (503) 285-7557

NWMAR128314

NORTHWEST MARINE IRON WORKS

55

SHIP REPAIRERS
GENERAL MACHINE WORK
ENGINEERING

MAIL PAYMENT TO:
P.O. BOX 4000-58
PORTLAND, OREGON 97208

INVOICE

M/V "PAD AMERICA" and Owners
c/o Barber Willhelmsen (California) Inc.
319 S.W. Washington Street
Portland, Oregon 97204

DATE: August 23, 1988
OUR JOB NO.:
CUSTOMER'S ORDER NO.: 3395
CONTRACT NO.:
INVOICE NO.: 3395
TERMS: Net

CUSTOMER CODE NUMBER: 000888

Duns No 00-902-8580

"M/V PAD AMERICA"

For furnishing labor, material, and equipment to accomplish repairs in accordance with the attached specifications.

Total Amount Due This Invoice $1,531.00
==========

Not
Called
Final

PAST DUE PAYMENTS SHALL BEAR INTEREST AT THE HIGHEST LAWFUL RATE UNTIL REPAID. NOT TO EXCEED 1½% PER MONTH.

CORRESPONDENCE ADDRESS P.O. BOX 3109 PORTLAND, OREGON 97208 PHONE (503) 285-7557

NWMAR128315

NORTHWEST MARINE IRON WORKS

56

SHIP REPAIRERS
GENERAL MACHINE WORK
ENGINEERING

MAIL PAYMENT TO:
P.O. BOX 4000-58
PORTLAND, OREGON 97208

INVOICE

M/V "COLONIAL EXPLORER" and Owners
c/o Exploration Cruises
1500 Metropolitan Park Building
1600 Olive Way
Seattle, WA 98101

DATE August 23, 1988
OUR JOB NO. 3393
CUSTOMER'S ORDER NO.
CONTRACT NO.
INVOICE NO. 3393
TERMS Net on Receipt of Invoice

CUSTOMER CODE NUMBER: 004610

Duns No. 00-902-8580

"M/V COLONIAL EXPLORER"

For furnishing labor, material, and equipment to accomplish repairs in accordance with the attached specification.

AMOUNT DUE THIS INVOICE $1,009.45

Net
Calley
Final

PAST DUE PAYMENTS SHALL BEAR INTEREST AT THE HIGHEST LAWFUL RATE UNTIL REPAID, NOT TO EXCEED 1½% PER MONTH.

CORRESPONDENCE ADDRESS P.O. BOX 3109 PORTLAND, OREGON 97208 PHONE (503) 285-7557

NWMAR128316

57

NORTHWEST MARINE IRON WORKS

SHIP REPAIRERS
GENERAL MACHINE WORK
ENGINEERING

MAIL PAYMENT TO:
P.O. BOX 4000-58
PORTLAND, OREGON 97208

INVOICE

M/V "SANKO PRELUDE" and Owners
c/o Cascade Shipping Company
806 S.W. Broadway, Suite 550
Portland, Oregon 97205

DATE August 23, 1988
OUR JOB NO. 3392
CUSTOMER'S ORDER NO.
CONTRACT NO.
INVOICE NO. 3392
TERMS Net on Receipt of Invoice

CUSTOMER CODE NUMBER: 001948

Duns No 00-902-8580

"M/V SANKO PRELUDE"

For furnishing labor, material, and equipment to accomplish repairs in accordance with the attached specification.

AMOUNT DUE THIS INVOICE $2,333.00
==========

Net
Called
Final

PAST DUE PAYMENTS SHALL BEAR INTEREST AT THE HIGHEST LAWFUL RATE UNTIL REPAID, NOT TO EXCEED 1½% PER MONTH.

CORRESPONDENCE ADDRESS P.O. BOX 3109 PORTLAND, OREGON 97208 PHONE (503) 285-7557

NWMAR128317

NORTHWEST MARINE IRON WORKS

78

SHIP REPAIRERS
GENERAL MACHINE WORK
ENGINEERING

MAIL PAYMENT TO:
P.O. BOX 4000-58
PORTLAND, OREGON 97208

INVOICE

M/V "FAYROUZ IV" and Owners
c/o Sunrise Shipping
1515 S.W. 5th Avenue
Suite 820
Portland, Oregon 97201

DATE August 26, 1988
OUR JOB NO. 3398
CUSTOMER'S ORDER NO.
CONTRACT NO.
INVOICE NO. 3398
TERMS Net

CUSTOMER CODE NUMBER: 029150

Duns No. 00-902-8580

"M/V FAYROUZ IV"

For furnishing labor, material, and equipment to accomplish repairs in accordance with the attached specifications.

Total Amount Due This Invoice $3,258.00

FINAL
CALLEY
NET

PAST DUE PAYMENTS SHALL BEAR INTEREST AT THE HIGHEST LAWFUL RATE UNTIL REPAID, NOT TO EXCEED 1½% PER MONTH

CORRESPONDENCE ADDRESS P.O. BOX 3109 PORTLAND, OREGON 97208 PHONE (503) 285-7557

NORTHWEST MARINE IRON WORKS

79

SHIP REPAIRERS
GENERAL MACHINE WORK
ENGINEERING

MAIL PAYMENT TO:
P.O. BOX 4000-58
PORTLAND, OREGON 97208

INVOICE

International Steamship Corporation
618 Second Avenue
Alaska Building, Suite 1200
Seattle, WA 098104

Attention: Mr. Gus Mankertz

CUSTOMER CODE NUMBER: 008343

DATE	August 26, 1988
OUR JOB NO.	3349
CUSTOMER'S ORDER NO.	
CONTRACT NO.	
INVOICE NO.	3349
TERMS	Net

Duns No. 00-902-8580

M/V "GREEN RIDGE"
EX "WOERMANN MERCUR

1. TAILSHAFT $390.00

Furnished labor, material and equipment to prepare tailshaft ex "WOERMANN MERCUR" for overseas shipment.

Total Amount Due This Invoice $390.00
========

Partial
Calley
Net

PAST DUE PAYMENTS SHALL BEAR INTEREST AT THE HIGHEST LAWFUL RATE UNTIL REPAID, NOT TO EXCEED 1½% PER MONTH

CORRESPONDENCE ADDRESS P.O. BOX 3109 PORTLAND, OREGON 97208 PHONE (503) 285-7557

NORTHWEST MARINE IRON WORKS
INVOICES BY CALLEY

MONTH OF July 1988

CUSTOMER	SHIP	INVOICE DATE	INVOICE NUMBER	INVOICE AMOUNT	INVOICE PAYMENT DATE	COMMISSION PERCENT	COMMISSION AMOUNT	COMMISSION DATE PAID	COMMISSION CHECK NUMBER
Chantiers De L'Atlantique	Noordam & Nieuw Amsterdam	7/5/88	3110-5	1,500.00	8-31-88	10%	150.00	9-02-88	220491
International Shipping	Santa Barbara	7/8/88	3363	14,786.00	9-6-88	10%	1,478.60	9-15-88	220493
Holland America	Noordam	7/8/88	3325A	19,068.00					DO NOT PAY - this commission paid with Nieuw Amsterdam
Sunbeam Shipping	Sea Whisper	7/13/88	3368	1,400.00	8-24-88	10%	140.00	9-02-88	220491
Nedlloyd	Nedlloyd Bahrain	7/13/88	3366	764.00	8-19-88	10%	76.40	9-02-88	220491
International Shipping	Hakafu	7/14/88	3370	4,134.00	9-19-88	10%	413.40	9-30-88	220494
Williams Diamond Co	Venture Star	7/27/88	3376	49,876.00	8-31-88	10%	4,987.60	9-02-88	220491
Cascade Shipping	Pacific Dreamer	7/29/88	3381	~~17,003.50~~ 15,000.00	8-16-88	10%	~~1700.35~~	9-15-88	220493
Nogesco	Star Grainger	7/29/88	3378	19,286.00	10-20-88	10%	1,928.60	10-28-88	220499

NWMAR128320

NORTHWEST MARINE IRON WORKS

SHIP REPAIRERS
GENERAL MACHINE WORK
ENGINEERING

MAIL PAYMENT TO:
P.O. BOX 4000-58
PORTLAND, OREGON 97208

INVOICE

Chantiers De L'Atlantique
Alshom-Atlantique
B. P. 400-44608
St. Nazaire, Cedex
FRANCE

DATE	July 5, 1988
OUR JOB NO.	3110
CUSTOMER'S ORDER NO.	
CONTRACT NO.	
INVOICE NO.	3110-S
TERMS	Net

CUSTOMER CODE NUMBER: 02119

Duns No. 00-902-8580

Warehouse charges for the main engine generator step-up gears, Ex-Noordam and Nieuw Amsterdam.

Charges for the month of July, 1988.

TOTAL AMOUNT DUE THIS INVOICE: $1,500.00

Partial Collect Net

PAST DUE PAYMENTS SHALL BEAR INTEREST AT THE HIGHEST LAWFUL RATE UNTIL REPAID, NOT TO EXCEED 1½% PER MONTH.

CORRESPONDENCE ADDRESS P.O. BOX 3109 PORTLAND, OREGON 97208 PHONE (503) 285-7557

NORTHWEST MARINE IRON WORKS

SHIP REPAIRERS
GENERAL MACHINE WORK
ENGINEERING

MAIL PAYMENT TO:
P.O. BOX 4000-58
PORTLAND, OREGON 97208

INVOICE

M/V "SANTA BARBARA" and Owners
c/o International Shipping Co.
Commonwealth Building
421 S.W. Sixth Avenue
Portland, OR 97205

DATE July 8, 1988
OUR JOB NO. 3363
CUSTOMER'S ORDER NO.
CONTRACT NO.
INVOICE NO. 3363
TERMS Net

CUSTOMER CODE NUMBER: 008520

Duns No. 00-902-8580

M/V "SANTA BARBARA"

For furnishing labor, material and equipment to accomplish repairs in accordance with the attached specifications.

Total Amount Due This Invoice $14,786.00

Final Calley Net

PAST DUE PAYMENTS SHALL BEAR INTEREST AT THE HIGHEST LAWFUL RATE UNTIL REPAID, NOT TO EXCEED 1½% PER MONTH.

CORRESPONDENCE ADDRESS P.O. BOX 3109 PORTLAND, OREGON 97208 PHONE (503) 285-7557

NWMAR128322

6

NORTHWEST MARINE IRON WORKS

SHIP REPAIRERS
GENERAL MACHINE WORK
ENGINEERING

MAIL PAYMENT TO:
P.O. BOX 4000-58
PORTLAND, OREGON 97208

INVOICE

M/V "Noordam"and Owner
c/o Holland America Line
Elliott Bay Office Park
300 Elliott Avenue West
Seattle, Washington 98119

DATE July 8, 1988
OUR JOB NO. 3325
CUSTOMER'S ORDER NO.
CONTRACT NO.
INVOICE NO. 3325A
TERMS Net

CUSTOMER CODE NUMBER: 007203

Duns No. 00-902-8580

M/V "Noordam"

Labor and Material in connection with propeller blade repairs (item 98)	$19,068.00

Final
Calley
Net

PAST DUE PAYMENTS SHALL BEAR INTEREST AT THE HIGHEST LAWFUL RATE UNTIL REPAID, NOT TO EXCEED 1½% PER MONTH.

CORRESPONDENCE ADDRESS P.O. BOX 3109 PORTLAND, OREGON 97208 PHONE (503) 285-7557

NWMAR128323

/ 17

NORTHWEST MARINE IRON WORKS

SHIP REPAIRERS
GENERAL MACHINE WORK
ENGINEERING

MAIL PAYMENT TO:
P.O. BOX 4000-58
PORTLAND, OREGON 97208

INVOICE

M/V "SEA WHISPER" and Owners
c/o Sunrise Shipping Agency
1515 S. W. 5th Avenue, Suite 820
Portland, Oregon 97201

DATE July 13, 1988
OUR JOB NO. 3368
CUSTOMER'S ORDER NO.
CONTRACT NO.
INVOICE NO. 3368
TERMS Net on Receipt of Invoice

CUSTOMER CODE NUMBER: 009150

Duns No. 00-902-8580

"M/V Sea Whisper"

To accomplish repairs on subject vessels in accordance with specifications and negotiations.

Total Amount Due This Invoice $ 1,400.00

Final Called Net

PAST DUE PAYMENTS SHALL BEAR INTEREST AT THE HIGHEST LAWFUL RATE UNTIL REPAID, NOT TO EXCEED 1½% PER MONTH

CORRESPONDENCE ADDRESS P.O. BOX 3109 PORTLAND, OREGON 97208 PHONE (503) 285-7557

NWMAR128324

/ 18.

NORTHWEST MARINE IRON WORKS

SHIP REPAIRERS
GENERAL MACHINE WORK
ENGINEERING

MAIL PAYMENT TO:
P.O. BOX 4000-58
PORTLAND, OREGON 97208

INVOICE

M/V "NEDLLOYD BAHRAIN" and Owners
c/o Nedlloyd
200 S. W. Market, Suite 1010
Portland, Oregon 97201

DATE July 13, 1988
OUR JOB NO. 3366
CUSTOMER'S ORDER NO.
CONTRACT NO.
INVOICE NO. 3366
TERMS Net on Receipt of Invoice

CUSTOMER CODE NUMBER: 014200

Duns No. 00-902-8580

"M/V Nedlloyd Bahrain"

To accomplish repairs on subject vessels in accordance with specifications and negotiations.

Total Amount Due This Invoice $ 764.00

Final Calley Nw

PAST DUE PAYMENTS SHALL BEAR INTEREST AT THE HIGHEST LAWFUL RATE UNTIL REPAID, NOT TO EXCEED 1½% PER MONTH

CORRESPONDENCE ADDRESS P.O. BOX 3109 PORTLAND, OREGON 97208 PHONE (503) 285-7557

NWMAR128325

NORTHWEST MARINE IRON WORKS

25

SHIP REPAIRERS
GENERAL MACHINE WORK
ENGINEERING

MAIL PAYMENT TO:
P.O. BOX 4000-58
PORTLAND, OREGON 97208

INVOICE

M/V "HAKAFU" and Owners
c/o International Shipping Company
421 S.W. 6th Avenue
Portland, Oregon 97204

DATE July 14, 1988
OUR JOB NO. 3370
CUSTOMER'S ORDER NO.
CONTRACT NO.
INVOICE NO. 3370
TERMS Net on Receipt of Invoice

CUSTOMER CODE NUMBER: 008520

Duns No. 00-902-8580

"M/V Hakafu"

To accomplish repairs on subject vessels in accordance with specifications and negotiations.

Total Amount Due This Invoice $ 4,134.00

Final
Called
Net

PAST DUE PAYMENTS SHALL BEAR INTEREST AT THE HIGHEST LAWFUL RATE UNTIL REPAID, NOT TO EXCEED 1½% PER MONTH.

CORRESPONDENCE ADDRESS P.O. BOX 3109 PORTLAND, OREGON 97208 PHONE (503) 285-7557

56

NORTHWEST MARINE IRON WORKS

SHIP REPAIRERS
GENERAL MACHINE WORK
ENGINEERING

MAIL PAYMENT TO:
P.O. BOX 4000-58
PORTLAND, OREGON 97208

INVOICE

M/V "VENTURE STAR" and Owners
c/o Williams, Dimond and Company
200 S.W. Main
Portland, Oregon 97204

DATE July 27, 1988
OUR JOB NO. 3376
CUSTOMER'S ORDER NO.
CONTRACT NO.
INVOICE NO. 3376
TERMS Net on Receipt of Invoice

CUSTOMER CODE NUMBER: 034400

Duns No 00-902-8580

"M/V Venture Star"

To accomplish repairs on subject vessels in accordance with specifications and negotiations.

Total Amount Due This Invoice $ 49,876.00

Net
Calley
Final

PAST DUE PAYMENTS SHALL BEAR INTEREST AT THE HIGHEST LAWFUL RATE UNTIL REPAID, NOT TO EXCEED 1½% PER MONTH

CORRESPONDENCE ADDRESS P.O. BOX 3109 PORTLAND, OREGON 97208 PHONE (503) 285-7557

NWMAR128327

NORTHWEST MARINE IRON WORKS

70-

SHIP REPAIRERS
GENERAL MACHINE WORK
ENGINEERING

MAIL PAYMENT TO:
P.O. BOX 4000-58
PORTLAND, OREGON 97208

INVOICE

M/V "Pacific Dreamer" and Owners
c/o Cascade Shipping Company
10 N.W. 10th, Ste. 500
Portland, Oregon 97209

DATE July 29, 1988
OUR JOB NO. 3381
CUSTOMER'S ORDER NO.
CONTRACT NO.
INVOICE NO. 3381
TERMS Net on Receipt of Invoice

CUSTOMER CODE NUMBER: 001948

Duns No. 00-902-8580

"M/V Pacific Dreamer"

To accomplish repairs on subject vessels in accordance with specifications and negotiations.

Total Amount Due This Invoice $17,003.50
==========

Net
Called
Final

PAST DUE PAYMENTS SHALL BEAR INTEREST AT THE HIGHEST LAWFUL RATE UNTIL REPAID, NOT TO EXCEED 1½% PER MONTH.

CORRESPONDENCE ADDRESS P.O. BOX 3109 PORTLAND, OREGON 97208 PHONE (503) 285-7557

NWMAR128328

NORTHWEST MARINE IRON WORKS

SHIP REPAIRERS
GENERAL MACHINE WORK
ENGINEERING

MAIL PAYMENT TO:
P.O. BOX 4000-58
PORTLAND, OREGON 97208

INVOICE

M/V "Star Geiranger" and Owners
c/o Nagesco
961 A West 1st Street
North Vancouver, B.C.
Canada V7P1A5

DATE	July 29, 1988
OUR JOB NO.	3378
CUSTOMER'S ORDER NO.	
CONTRACT NO.	
INVOICE NO.	3378
TERMS	Net on Receipt of Invoice

CUSTOMER CODE NUMBER: 014075

Duns No. 00-902-8580

"M/V Star Geiranger"

To accomplish repairs on subject vessels in accordance with specifications and negotiations.

Total Amount Due This Invoice $ 19,286.00

Not Called Final

PAST DUE PAYMENTS SHALL BEAR INTEREST AT THE HIGHEST LAWFUL RATE UNTIL REPAID, NOT TO EXCEED 1½% PER MONTH.

CORRESPONDENCE ADDRESS P.O. BOX 3109 PORTLAND, OREGON 97208 PHONE (503) 285-7557

NWMAR128329

NORTHWEST MARINE IRON WORKS
INVOICES BY CALLEY

MONTH OF June 1988

CUSTOMER	SHIP	INVOICE DATE	INVOICE NUMBER	INVOICE AMOUNT	INVOICE PAYMENT DATE	COMMISSION PERCENT	COMMISSION AMOUNT	COMMISSION DATE PAID	COMMISSION CHECK NUMBER
International Shipping	M/V Hakufu	6/2/88	3346	28,686.00	10-25-88	10%	2868.60	10-28-88	266647
Atlantic Maritime	Nieuw Amsterdam	6/2/88	3276A	1,035.86	7/8/88	10%	103.58	8-1-88	220566
Sunrise Shipping	Hyundai	6/6/88	3343	7,131.80	7/29	10%	713.00	8-1-88	220566
Intl International Shipping	Pandias	6/6/88	3344	1,639.00	7/29/88	10%	163.90	8-1-88	220566
Holland America	Nieuw Amsterdam	6/15/88	3276D	172,319.00	one billing from Dick				
Holland America	Nieuw Amsterdam	6/15/88	3276C	19,068.00					
Holland America	Nieuw Amsterdam	6/15/88	3276B	515,640.00					
Holland America	Rotterdam	6/15/88	3264D	127,275.72	one billing				
General Steamship	Samuck Pacific	6/28/88	3353	983.00	7/28	10%	98.30	8-1-88	220566
Sunrise Shipping	Wadi al Kakheel	6/28/88	3359	1,319.00	12/6/88	10%	131.90	12-16-88	266198
Sunrise Shipping	Hyundai II	6/30/88	3345	265,106.00	7/29	10%	26,510.00	8-1-88	220566
General Steamship	M/V Sawako	6/30/88	3358	37,871.00	7/19 - 37,171.00	10%	3,717.00 ~~3,787.00~~	8-1-88	220566

w/o #10 6/20/90

NWMAR128330

NORTHWEST MARINE IRON WORKS

SHIP REPAIRERS
GENERAL MACHINE WORK
ENGINEERING

MAIL PAYMENT TO:
P.O. BOX 4000-58
PORTLAND, OREGON 97208

INVOICE

M/V "HAKUFU" and Owners
c/o International Shipping Co.
Commonwealth Building
421 S.W. Sixth Avenue
Portland, OR 97205

DATE June 2, 1988
OUR JOB NO. 3346
CUSTOMER'S ORDER NO.
CONTRACT NO.
INVOICE NO. 3346
TERMS Net

CUSTOMER CODE NUMBER: 008520

Duns No. 00-902-8580

M/V "HAKUFU"

For furnishing labor, material and equipment to accomplish repairs in accordance with the attached specifications.

Total Amount Due This Invoice $28,686.00

FINAL
Calley
NET

PAST DUE PAYMENTS SHALL BEAR INTEREST AT THE HIGHEST LAWFUL RATE UNTIL REPAID, NOT TO EXCEED 1½% PER MONTH

NORTHWEST MARINE IRON WORKS

SHIP REPAIRERS
GENERAL MACHINE WORK
ENGINEERING

MAIL PAYMENT TO:
P.O. BOX 4000-58
PORTLAND, OREGON 97208

INVOICE

Atlantic Maritime
990 N.W. 166th Street
Miami, Florida 33169

(305) 625-7113

Attention: Mr Robert Veino

CUSTOMER CODE NUMBER: 000743

DATE June 2, 1988
OUR JOB NO. 3276
CUSTOMER'S ORDER NO.
CONTRACT NO.
INVOICE NO. 3276 A
TERMS Net on Receipt of Invoice

Duns No. 00-902-8580

M/V "NIEUW AMSTERDAM"

For services rendered	$1,035.86

FINAL
CALLEY
NET

PAST DUE PAYMENTS SHALL BEAR INTEREST AT THE HIGHEST LAWFUL RATE UNTIL REPAID, NOT TO EXCEED 1½% PER MONTH.

CORRESPONDENCE ADDRESS P.O. BOX 3109 PORTLAND, OREGON 97208 PHONE (503) 285-7557

NWMAR128332

NORTHWEST MARINE IRON WORKS

SHIP REPAIRERS
GENERAL MACHINE WORK
ENGINEERING

MAIL PAYMENT TO:
P.O. BOX 4000-58
PORTLAND, OREGON 97208

INVOICE

M/V "HYUNDAI #5" and Owners
c/o Sunrise Shipping Agency
1515 S.W. 5th Avenue
Suite 820
Portland, Oregon 97201

DATE June 6, 1988
OUR JOB NO. 3343
CUSTOMER'S ORDER NO.
CONTRACT NO.
INVOICE NO. 3343
TERMS Net on Receipt of Invoice

CUSTOMER CODE NUMBER: 029150

Duns No. 00-902-8580

M/V "HYUNDAI #5"

To accomplish repairs on subject vessel in accordance with specification items 1 through 7.

$7,131.80
==========

Final
Called
Not

PAST DUE PAYMENTS SHALL BEAR INTEREST AT THE HIGHEST LAWFUL RATE UNTIL REPAID, NOT TO EXCEED 1½% PER MONTH.

CORRESPONDENCE ADDRESS P.O. BOX 3109 PORTLAND, OREGON 97208 PHONE (503) 285-7557

NWMAR128333

NORTHWEST MARINE IRON WORKS

SHIP REPAIRERS
GENERAL MACHINE WORK
ENGINEERING

MAIL PAYMENT TO:
P.O. BOX 4000-58
PORTLAND, OREGON 97208

INVOICE

M/V "PANDIAS" and Owners
c/o International Shipping Company
Commonwealth Building
421 S.W. 6th Avenue
Portland, Oregon 97205

DATE June 6, 1988
OUR JOB NO. 3344
CUSTOMER'S ORDER NO.
CONTRACT NO.
INVOICE NO. 3344
TERMS Net on Receipt of Invoice

CUSTOMER CODE NUMBER: 008520

Duns No. 00-902-8560

M/V "PANDIAS"

To accomplish repairs on subject vessel in accordance with specification items 1 through 3.

$1,639.00

FINAL
Calley
NET

PAST DUE PAYMENTS SHALL BEAR INTEREST AT THE HIGHEST LAWFUL RATE UNTIL REPAID, NOT TO EXCEED 1½% PER MONTH.

CORRESPONDENCE ADDRESS P.O. BOX 3109 PORTLAND, OREGON 97208 PHONE (503) 285-7557

NWMAR128334

30

NORTHWEST MARINE IRON WORKS

SHIP REPAIRERS
GENERAL MACHINE WORK
ENGINEERING

MAIL PAYMENT TO:
P.O. BOX 4000-58
PORTLAND, OREGON 97208

INVOICE

M/V "Nieuw Amsterdam" and Owner
c/o Holland America Line
Elliott Bay Office Park
300 Elliott Avenue West
Seattle, Washington 98119

DATE June 15, 1988
OUR JOB NO. 3276
CUSTOMER'S ORDER NO.
CONTRACT NO.
INVOICE NO. 3276D
TERMS Net

CUSTOMER CODE NUMBER: 007203

Duns No. 00-902-8580

M/V "Nieuw Amsterdam"

Gross Contract		$1,000,719.00
Less:	Port of Portland Discount	(28,400.00)
Less:	Progress Payments	(800,000.00)
	Total Amount Due	$ 172,319.00

Final
Shaip
Nek

PAST DUE PAYMENTS SHALL BEAR INTEREST AT THE HIGHEST LAWFUL RATE UNTIL REPAID, NOT TO EXCEED 1½% PER MONTH

CORRESPONDENCE ADDRESS P.O. BOX 3109 PORTLAND, OREGON 97208 PHONE (503) 285-7557

3/

NORTHWEST MARINE IRON WORKS

SHIP REPAIRERS
GENERAL MACHINE WORK
ENGINEERING

MAIL PAYMENT TO:
P.O. BOX 4000-58
PORTLAND, OREGON 97208

INVOICE

M/V "Nieuw Amsterdam" and Owner
c/o Holland America Line
Elliott Bay Office Park
300 Elliott Avenue West
Seattle, Washington 98119

DATE June 15, 1988
OUR JOB NO. 3276
CUSTOMER'S ORDER NO.
CONTRACT NO.
INVOICE NO. 3276C
TERMS Net

CUSTOMER CODE NUMBER: 007203

Duns No. 00-902-8580

M/V "Nieuw Amsterdam"

Labor and Material in connection with
propeller blade repairs (item 98) $19,068.00

Partial
Shaft
Jet

PAST DUE PAYMENTS SHALL BEAR INTEREST AT THE HIGHEST LAWFUL RATE UNTIL REPAID, NOT TO EXCEED 1½% PER MONTH

NWMAR128336

NORTHWEST MARINE IRON WORKS

SHIP REPAIRERS
GENERAL MACHINE WORK
ENGINEERING

MAIL PAYMENT TO:
P.O. BOX 4000-58
PORTLAND, OREGON 97208

INVOICE

M/V "Nieuw Amsterdam" and Owner
c/o Holland America Line
Elliott Bay Office Park
300 Elliott Avenue West
Seattle, Washington 98119

DATE June 15, 1988
OUR JOB NO. 3276
CUSTOMER'S ORDER NO.
CONTRACT NO.
INVOICE NO. 3276B
TERMS Net

CUSTOMER CODE NUMBER: 007203

Duns No. 00-902-8580

M/V "Nieuw Amsterdam"

Labor and Material in connection with

(1)	Cold fresh water piping (32A) (item 78)	$350,168.00
(2)	Cabin potable water line manifolds (31) (item 79)	165,472.00
	Amount Due This Invoice	$515,640.00

Partial Ship Not

PAST DUE PAYMENTS SHALL BEAR INTEREST AT THE HIGHEST LAWFUL RATE UNTIL REPAID, NOT TO EXCEED 1½% PER MONTH

CORRESPONDENCE ADDRESS P.O. BOX 3109 PORTLAND, OREGON 97208 PHONE (503) 285-7557

NWMAR128337

33

NORTHWEST MARINE IRON WORKS

SHIP REPAIRERS
GENERAL MACHINE WORK
ENGINEERING

MAIL PAYMENT TO:
P.O. BOX 4000-58
PORTLAND, OREGON 97208

INVOICE

S/S "Rotterdam" and Owner
c/o Holland America Line
Elliott Bay Office Park
300 Elliott Avenue West
Seattle, Washington 98119

DATE June 15, 1988
OUR JOB NO. 3264
CUSTOMER'S ORDER NO.
CONTRACT NO.
INVOICE NO. 3264D
TERMS Net

CUSTOMER CODE NUMBER: 007203

Duns No. 00-902-8580

S/S "Rotterdam"

Gross Contract			$1,225,278.00
Less:	Port of Portland Discount		(33,750.00)
Less:	Progress Payments		
	Total Progress Billings	$1,400,000.00	
	Applied to 3264B	(202,849.72)	
	Applied to 3264C	(132,898.00)	
			(1,064,252.28)
	TOTAL AMOUNT DUE		$ 127,275.72

FINAL
Charge
NOK

PAST DUE PAYMENTS SHALL BEAR INTEREST AT THE HIGHEST LAWFUL RATE UNTIL REPAID, NOT TO EXCEED 1½% PER MONTH

CORRESPONDENCE ADDRESS P.O. BOX 3109 PORTLAND, OREGON 97208 PHONE (503) 285-7557

NORTHWEST MARINE IRON WORKS

62 ✓

SHIP REPAIRERS
GENERAL MACHINE WORK
ENGINEERING

MAIL PAYMENT TO:
P.O. BOX 4000-58
PORTLAND, OREGON 97208

INVOICE

M/V "SAMICK PACIFIC" and Owners
c/o General Steamship Corporation
S.W. 6th Avenue, Suite 410
Portland, Oregon 97201

DATE	June 28, 1988
OUR JOB NO.	3353
CUSTOMER'S ORDER NO.	
CONTRACT NO.	3353
INVOICE NO.	Net
TERMS	

CUSTOMER CODE NUMBER: 006200

Duns No. 00-902-8580

"M/V Samick Pacific"

For furnishing labor, material, and equipment to accomplish repairs in accordance with the attached specifications.

Total Amount Due This Invoice $983.00

Final
Called
Net

PAST DUE PAYMENTS SHALL BEAR INTEREST AT THE HIGHEST LAWFUL RATE UNTIL REPAID, NOT TO EXCEED 1½% PER MONTH.

CORRESPONDENCE ADDRESS P.O. BOX 3109 PORTLAND, OREGON 97208 PHONE (503) 285-7557

NWMAR128339

6 3 ✓

NORTHWEST MARINE IRON WORKS

SHIP REPAIRERS
GENERAL MACHINE WORK
ENGINEERING

MAIL PAYMENT TO:
P.O. BOX 4000-58
PORTLAND, OREGON 97208

INVOICE

M/V "WADI AL NAKHEEL" and Owners
c/o Sunrise Shipping Agency
1515 S.W. Fifth Avenue
Portland, Oregon 97201

DATE June 28, 1988
OUR JOB NO. 3359
CUSTOMER'S ORDER NO.
CONTRACT NO.
INVOICE NO. 3359
TERMS Net

CUSTOMER CODE NUMBER: 029150

Duns No. 00-902-8580

"M/V Wadi Al Kakheel"

For furnishing labor, material and equipment to accomplish repairs in accordance with the attached specifications.

Total Amount Due This Invoice $1,319.00

FINAL
Calley
Net

PAST DUE PAYMENTS SHALL BEAR INTEREST AT THE HIGHEST LAWFUL RATE UNTIL REPAID, NOT TO EXCEED 1½% PER MONTH.

CORRESPONDENCE ADDRESS P.O. BOX 3109 PORTLAND, OREGON 97208 PHONE (503) 285-7557

NWMAR128340

66 ✓

NORTHWEST MARINE IRON WORKS

SHIP REPAIRERS
GENERAL MACHINE WORK
ENGINEERING

MAIL PAYMENT TO:
P.O. BOX 4000-58
PORTLAND, OREGON 97208

INVOICE

M/V "HYUNDAI 11" and Owners
c/o Sunrise Shipping Agency
1515 S.W. 5th Avenue, Suite 820
Portland, Oregon 97201

DATE June 30, 1988
OUR JOB NO. 3345
CUSTOMER'S ORDER NO.
CONTRACT NO.
INVOICE NO. 3345
TERMS Net on Receipt of Invoice

CUSTOMER CODE NUMBER: 029150

Duns No. 00-902-8580

"M/V Hyundai 11"

To accomplish repairs on subject vessels in accordance with specifications and negotiations.

Total Amount Due This Invoice $272,237.80

INTERNAL ONLY

INVOICE 3345 265106.00

BALANCE OF $7131.80 BILLED ON JOB 3343

J.O.
6/30/88

FINAL
CALLEV
NET

PAST DUE PAYMENTS SHALL BEAR INTEREST AT THE HIGHEST LAWFUL RATE UNTIL REPAID, NOT TO EXCEED 1½% PER MONTH.

CORRESPONDENCE ADDRESS P.O. BOX 3109 PORTLAND, OREGON 97208 PHONE (503) 285-7557

NWMAR128341

69 ✓

NORTHWEST MARINE IRON WORKS

SHIP REPAIRERS
GENERAL MACHINE WORK
ENGINEERING

MAIL PAYMENT TO:
P.O. BOX 4000-58
PORTLAND, OREGON 97208

INVOICE

M/V "SAWAKO" and Owners
c/o General Steamship Corporation
421 S.W. 6th Avenue, Suite 410
Portland, Oregon 97204

DATE June 30, 1988
OUR JOB NO. 3358
CUSTOMER'S ORDER NO.
CONTRACT NO.
INVOICE NO. 3358
TERMS Net on Receipt of Invoice

CUSTOMER CODE NUMBER: 006200

Duns No. 00-902-8580

"M/V Sawako"

To accomplish repairs on subject vessels in accordance with specifications.

Total Amount Due This Invoice $37,871.00

Final
Calley
Net

PAST DUE PAYMENTS SHALL BEAR INTEREST AT THE HIGHEST LAWFUL RATE UNTIL REPAID, NOT TO EXCEED 1½% PER MONTH.

CORRESPONDENCE ADDRESS P.O. BOX 3109 PORTLAND, OREGON 97208 PHONE (503) 285-7557

NORTHWEST MARINE IRON WORKS
INVOICES BY CALLEY

MONTH OF May 1988

CUSTOMER	SHIP	INVOICE DATE	INVOICE NUMBER	INVOICE AMOUNT	INVOICE PAYMENT DATE	COMMISSION PERCENT	COMMISSION AMOUNT	COMMISSION DATE PAID	COMMISSION CHECK NUMBER	
Chantiers De L'Atlantique	Ex-Noordam Nieuw Amsterdam	5/3/88	3110-Q	1,500.00	6-16	10%	150.00	7-15-88	220565	
Port of Portland	M/V "Elegant C"	5/3/88	3324	3,498.00	5-31-88	10%	349.80	6-15	220544	
Maritime Overseas Corp	Overseas Joyce	5/9/88	3328	437.00	6-20	10%	43.70	7-15	220565	
General Steamship	Norman Amstel	5/9/88	3330	15,402.00	5-12	10%	1483.15	7-15	220565	corrected inv. $
Holland America	Rotterdam	5/13/88	3264	800,000.00	5-18-88					
Nedlloyd	Nedlloyd Katwijk	5/12/88	3334	4,706.20	6-16	10%	470.62	6-30	220554	
Holland America	Noordam	5/19/88	3325	-0-						
Holland America	Rotterdam	5/25/88	3264B	202,849.72	CM issued for full amount					
Holland America	Nieuw amsterdam		3276	800,000.00	5-27-88	19.19	153,500.00	6-27-88	220552	
Holland America	Rotterdam	5/25/88	3264-C	132,898.00	CM issued for full amount					
Holland America	Rotterdam	5/24/88	3264-A	600,000.00	5-27-88	one billing	156,102.50	6-27-88	220553	
General Steamship	Ex Zenith	5/20/88	3339	2,052.00	7-8-88	10%	205.20	7-15-88	220565	
Chantiers De L'Atlantique	Ex Noordam & Nieuw Amsterdam	~~5/10~~ 5/31/88	3110-R	1,500.00	7-11	10%	150.00	7-15-88	220565	

NWMAR128343

NORTHWEST MARINE IRON WORKS

SHIP REPAIRERS
GENERAL MACHINE WORK
ENGINEERING

MAIL PAYMENT TO:
P.O. BOX 4000-58
PORTLAND, OREGON 97208

INVOICE

Chantiers De L'Atlantique
Alshom-Atlantique
B. P. 400-44608
St. Nazaire, Cedex
FRANCE

DATE	May 3, 1988
OUR JOB NO.	3110
CUSTOMER'S ORDER NO.	
CONTRACT NO.	
INVOICE NO.	3110-Q
TERMS	Net

CUSTOMER CODE NUMBER: 02119

Duns No. 00-902-8580

Warehouse charges for the main engine generator step-up gears, Ex-Noordam and Nieuw Amsterdam.

Charges for the month of May, 1988.

TOTAL AMOUNT DUE THIS INVOICE: $1,500.00

PARTIAL CALLEV NET

PAST DUE PAYMENTS SHALL BEAR INTEREST AT THE HIGHEST LAWFUL RATE UNTIL REPAID, NOT TO EXCEED 1½% PER MONTH.

CORRESPONDENCE ADDRESS P.O. BOX 3109 PORTLAND, OREGON 97208 PHONE (503) 285-7557

NWMAR128344

3

NORTHWEST MARINE IRON WORKS

SHIP REPAIRERS
GENERAL MACHINE WORK
ENGINEERING

MAIL PAYMENT TO:
P.O. BOX 4000-58
PORTLAND, OREGON 97208

INVOICE

M/V "Elegant C" and Owners
c/o Port of Portland
P.O Box 3529
Portland, Oregon 97208

DATE	May 3, 1988
OUR JOB NO.	3324
CUSTOMER'S ORDER NO.	
CONTRACT NO.	
INVOICE NO.	3324
TERMS	Net Upon Receipt of Invoice

CUSTOMER CODE NUMBER: 021350

Duns No. 00-902-8580

"M/V Elegant C"

To accomplish repairs to the subject vessel in accordance with specifications number 1 through number 3.

TOTAL AMOUNT DUE $3,498.00

FINAL
Calley
NET

PAST DUE PAYMENTS SHALL BEAR INTEREST AT THE HIGHEST LAWFUL RATE UNTIL REPAID, NOT TO EXCEED 1½% PER MONTH

CORRESPONDENCE ADDRESS P.O. BOX 3109 PORTLAND, OREGON 97208 PHONE (503) 285-7557

NWMAR128345

NORTHWEST MARINE IRON WORKS

M/V "ELEGANT C" and Owners
c/o Port of Portland
P.O. Box 3529
Portland, Oregon 97208

Job No. 3324
April 26, 1988

Furnish labor, material and equipment to attend the vessel at Terminal #4, Berth 412 in Portland, Oregon on Monday, April 25, 1988 to accomplish the following repairs to #3 cargo gear.

Item #1 Topping and Slewing Wire $1,190.00

Furnish labor, material and equipment to remove wire backlashers on port topping winch and port slewing winches. Straightened brake handle on the slewing winch. Removed guards on both winches and replaced them when wire was straightened out.

Item #2 Topping and Slewing Wire $1,824.00

Furnish labor, material and equipment to furnish to vessel one (1) new 7/8 dia. x 968 feet 6 x 25 IWRC galvanized wire rope with certs, to be installed by ships crew.

Item #3 Premium Time $ 484.00

Furnish premium time as authorized to accomplish repairs so as not to interfere with vessel's cargo commitments.

Total Amount Due This Invoice $3,498.00

NORTHWEST MARINE IRON WORKS

18

SHIP REPAIRERS
GENERAL MACHINE WORK
ENGINEERING

MAIL PAYMENT TO:
P.O. BOX 4000-58
PORTLAND, OREGON 97208

INVOICE

M/V "Overseas Joyce" and Owners
c/o Maritime Overseas Corporation
43 West 42nd Street
New York, New York 10036

DATE May 9, 1988
OUR JOB NO. 3328
CUSTOMER'S ORDER NO.
CONTRACT NO.
INVOICE NO. 3328
TERMS Net Upon Receipt of Invoice

CUSTOMER CODE NUMBER: 011720

Duns No 00-902-8580

"M/V Overseas Joyce"

To accomplish repairs to the subject vessel in accordance with specifications.

TOTAL AMOUNT DUE $437.00

FINAL
Calley
NET

PAST DUE PAYMENTS SHALL BEAR INTEREST AT THE HIGHEST LAWFUL RATE UNTIL REPAID, NOT TO EXCEED 1½% PER MONTH

CORRESPONDENCE ADDRESS P.O. BOX 3109 PORTLAND, OREGON 97208 PHONE (503) 285-7557

NWMAR128347

NORTHWEST MARINE IRON WORKS

/ 19

SHIP REPAIRERS
GENERAL MACHINE WORK
ENGINEERING

MAIL PAYMENT TO:
P.O. BOX 4000-58
PORTLAND, OREGON 97208

INVOICE

M/V "Norman Amstel" and Owners
c/o General Steamship Corporation
421 S.W. 6th
Portland, Oregon 97204

Attention: Gene Dieterly

CUSTOMER CODE NUMBER: 006200

DATE May 9, 1988
OUR JOB NO. 3330
CUSTOMER'S ORDER NO.
CONTRACT NO.
INVOICE NO. 3330
TERMS 5% discount seven (7) days

Duns No 00-902-8562

"M/V Norman Amstel"

To accomplish repairs to the subject vessel in accordance with specifications numbers 1 thru 4.

TOTAL AMOUNT DUE $15,402.00

FINAL
Calley
5% 7 DAYS

PAST DUE PAYMENTS SHALL BEAR INTEREST AT THE HIGHEST LAWFUL RATE UNTIL REPAID, NOT TO EXCEED 1½% PER MONTH

CORRESPONDENCE ADDRESS P.O. BOX 3109 PORTLAND, OREGON 97208 PHONE (503) 285-7557

31 ✓

NORTHWEST MARINE IRON WORKS

SHIP REPAIRERS
GENERAL MACHINE WORK
ENGINEERING

MAIL PAYMENT TO:
P.O. BOX 4000-58
PORTLAND, OREGON 97208

INVOICE

S/S "Rotterdam" and Owners
c/o Holland America Line
Elliott Bay Office Park
300 Elliott Avenue West
Seattle, Washington 98119

DATE May 13, 1988
OUR JOB NO. 3264
CUSTOMER'S ORDER NO.
CONTRACT NO.
INVOICE NO. 3264
TERMS Net

CUSTOMER CODE NUMBER: 007203

Duns No 00-902-8580

"S/S Rotterdam"

First Progress Billing

To bill for work in progress from May 7, 1988 to May 16, 1988	$800,000.00
Total Amount Due This Invoice	$800,000.00

Approved: _____
Mr. J. L. Adriaanse
Vice President - Technical Department

Date: May 13, 1988

Partial
Calley
Net

PAST DUE PAYMENTS SHALL BEAR INTEREST AT THE HIGHEST LAWFUL RATE UNTIL REPAID, NOT TO EXCEED 1½% PER MONTH

CORRESPONDENCE ADDRESS P.O. BOX 3109 PORTLAND, OREGON 97208 PHONE (503) 255-7557

NWMAR128349

NORTHWEST MARINE IRON WORKS

3 ✓

SHIP REPAIRERS
GENERAL MACHINE WORK
ENGINEERING

MAIL PAYMENT TO:
P.O. BOX 4000-58
PORTLAND, OREGON 97208

INVOICE

M/V "Nedlloyd Katwijk" and Owners
c/o Nedlloyd
200 S.W. Market, Suite 1010
Portland, Oregon 97201

DATE May 12, 1988
OUR JOB NO. 3334
CUSTOMER'S ORDER NO.
CONTRACT NO.
INVOICE NO. 3334
TERMS Net

CUSTOMER CODE NUMBER: 014200

Duns No 00-902-8580

"M/V Nedlloyd Katwijk"

To accomplish repairs to the subject vessel in accordance with specifications 1 thru 7. $4,706.20

FINAL
Calley
Net

PAST DUE PAYMENTS SHALL BEAR INTEREST AT THE HIGHEST LAWFUL RATE UNTIL REPAID, NOT TO EXCEED 1½% PER MONTH

CORRESPONDENCE ADDRESS P.O. BOX 3109 PORTLAND, OREGON 97208 PHONE (503) 285-7557

NWMAR128350

1

39

NORTHWEST MARINE IRON WORKS

SHIP REPAIRERS
GENERAL MACHINE WORK
ENGINEERING

MAIL PAYMENT TO:
P.O. BOX 4000-58
PORTLAND, OREGON 97208

INVOICE

"M/V "NOORDAM" and Owners
c/o Holland America Line
Elliott Bay Office Park
300 Elliott Avenue West
Seattle, WA 98119

DATE May 19, 1988
OUR JOB NO. 3325
CUSTOMER'S ORDER NO.
CONTRACT NO.
INVOICE NO 3325
TERMS Net

CUSTOMER CODE NUMBER. 07203

Duns No. 00-902-8580

"M/V NOORDAM"

To provide technical assistance in accordance with specification 1.

No Charge

CAILEY

PAST DUE PAYMENTS SHALL BEAR INTEREST AT THE HIGHEST LAWFUL RATE UNTIL REPAID, NOT TO EXCEED 1% PER MONTH

CORRESPONDENCE ADDRESS P.O. BOX 3109 PORTLAND OREGON 97208 PHONE (503) 285-7557

NWMAR128351

NORTHWEST MARINE IRON WORKS

73

SHIP REPAIRERS
GENERAL MACHINE WORK
ENGINEERING

MAIL PAYMENT TO:
P.O. BOX 4000-58
PORTLAND, OREGON 97208

INVOICE

Chantiers De L'Atlantique
Alshom-Atlantique
B. P. 400-44608
St. Nazaire, Cedex
FRANCE

DATE	May 31, 1988
OUR JOB NO.	3110
CUSTOMER'S ORDER NO.	
CONTRACT NO.	
INVOICE NO.	3110-R
TERMS	Net

CUSTOMER CODE NUMBER: 02119

Duns No. 00-902-8580

Warehouse charges for the main engine generator step-up gears, Ex-Noordam and Nieuw Amsterdam.

Charges for the month of June, 1988.

TOTAL AMOUNT DUE THIS INVOICE: $1,500.00

Partial Calley Net

PAST DUE PAYMENTS SHALL BEAR INTEREST AT THE HIGHEST LAWFUL RATE UNTIL REPAID, NOT TO EXCEED 1½% PER MONTH.

CORRESPONDENCE ADDRESS P.O. BOX 3109 PORTLAND, OREGON 97208 PHONE (503) 285-7557

NWMAR128352

NORTHWEST MARINE IRON WORKS
INVOICES BY CALLEY

MONTH OF April 1988

CUSTOMER	SHIP	INVOICE DATE	INVOICE NUMBER	INVOICE AMOUNT	INVOICE PAYMENT DATE	COMMISSION PERCENT	COMMISSION AMOUNT	COMMISSION DATE PAID	COMMISSION CHECK NUMBER	
Chartiers de l'Atlantique	Noordam + New Amsterdam	4/1/88	3110-P	1,500.00	5-19-88	10%	150.00	5-31-88	220533	
Kerr Steamship Co.	General Jacinto	4/7/88	3313	6,115.00	4-12-88	10%	611.50	4/15	220508	
Interocean Steamship	MV Stolt Scarf	4/11/88	3315	502.50	5-16-88	10%	50.00	6-15	220544	
Matson Navigation Corp	Nerezine	4/7/88	3311	78,728.80	4/21/88	18.844% add 10%	14,835.78 102.40	5/13 4/29	220528 220521	
General Steamship Corp	Helleldpont Vanguard	4/13/88	3316	9,207.50	5-27-88	10%	920.75	5-31-88	220533	
Central Gulf Lines	Green Bay	4/14/88	3306-B	88,817.65	4/20/88	23.7%	21,074.00	4/15	220508	Gil Miller app'd comm. prepay
International Shipping	Eastern Venture	4/14/88	3317	3,504.20	6-2-88	10%	350.00	6-15	220544	
Central Gulf Lines	Green Bay	4/14/88	3306-A	(91,817.65)						
Transamerica Navigation Corp	Veni II	4/21/88	3318	1,126.00	7-8	10%	112.60	7-15	220565	
Matson Agencies	MV Nerezine	4/29/88	3311-A	1,024.00						
Matson Agencies	MV Nerezine	4/29/88	3311-B	69,629.00						
O.S.L Shipping + Development Inc	MV Norman Queen	4/29/88	3327	34,309.97	5-6-88	10%	3,431.00	6-15-88	220544	
1st Ocean Marine	Veropeso	4/28/88	3321-B	17,450.00	9-15-88	10%	1,745.00	2-8-89	267107	

NWMAR128353

NORTHWEST MARINE IRON WORKS

SHIP REPAIRERS
GENERAL MACHINE WORK
ENGINEERING

MAIL PAYMENT TO:
P.O. BOX 4000-58
PORTLAND, OREGON 97208

INVOICE

Chantiers De L'Atlantique
Alshom-Atlantique
B. P. 400-44608
St. Nazaire, Cedex
FRANCE

DATE Apr 1, 1988
OUR JOB NO. 3110
CUSTOMER'S ORDER NO.
CONTRACT NO.
INVOICE NO. 3110-P
TERMS Net

CUSTOMER CODE NUMBER: 02119

Duns No. 00-902-8580

Warehouse charges for the main engine generator step-up gears, Ex-Noordam and Nieuw Amsterdam.

Charges for the month of April, 1988.

TOTAL AMOUNT DUE THIS INVOICE: $1,500.00

Partial Collect Net

PAST DUE PAYMENTS SHALL BEAR INTEREST AT THE HIGHEST LAWFUL RATE UNTIL REPAID, NOT TO EXCEED 1½% PER MONTH.

CORRESPONDENCE ADDRESS P.O. BOX 3109 PORTLAND, OREGON 97208 PHONE (503) 285-7557

NWMAR128354

6

NORTHWEST MARINE IRON WORKS

SHIP REPAIRERS
GENERAL MACHINE WORK
ENGINEERING

MAIL PAYMENT TO:
P.O. BOX 4000-58
PORTLAND, OREGON 97208

INVOICE

M/V "General Jacinto" and Owner
c/o Kerr Steamship Company
One S.W. Columbia, Suite 450
Portland, Oregon 97258

DATE April 7, 1988
OUR JOB NO. 3313
CUSTOMER'S ORDER NO.
CONTRACT NO.
INVOICE NO. 3313
TERMS Net

CUSTOMER CODE NUMBER: 009440

Duns No. 00-902-8580

"M/V General Jacinto"

To accomplish repairs and betterments to the subject vessel as per attached specifications, Number 1 thru Number 4.

TOTAL AMOUNT DUE THIS INVOICE $6,115.00
=========

FINAL
Calley
NET

PAST DUE PAYMENTS SHALL BEAR INTEREST AT THE HIGHEST LAWFUL RATE UNTIL REPAID, NOT TO EXCEED 1½% PER MONTH.

CORRESPONDENCE ADDRESS P.O. BOX 3109 PORTLAND, OREGON 97208 PHONE (503) 285-7557

NWMAR128355

NORTHWEST MARINE IRON WORKS

20

SHIP REPAIRERS
GENERAL MACHINE WORK
ENGINEERING

MAIL PAYMENT TO:
P.O. BOX 4000-58
PORTLAND, OREGON 97208

INVOICE

M/V Stolt Surf and Owners
c/o Interocean Steamship Company
Suite 1200 Alaska Building
618 2nd Avenue
Seattle, WA 98104

DATE Apr 11, 1988
OUR JOB NO. 3315
CUSTOMER'S ORDER NO.
CONTRACT NO.
INVOICE NO. 3315
TERMS Net

CUSTOMER CODE NUMBER: 08343

Duns No. 00-902-8580

M/V STOLT SURF

To accomplish repairs and betterments to the subject vessel, as per attached specification number 1.

TOTAL AMOUNT DUE THIS INVOICE: $502.50

Final Calley Net

PAST DUE PAYMENTS SHALL BEAR INTEREST AT THE HIGHEST LAWFUL RATE UNTIL REPAID, NOT TO EXCEED 1½% PER MONTH.

CORRESPONDENCE ADDRESS P.O. BOX 3109 PORTLAND, OREGON 97208 PHONE (503) 285-7557

NWMAR128356

NORTHWEST MARINE IRON WORKS

27

SHIP REPAIRERS
GENERAL MACHINE WORK
ENGINEERING

MAIL PAYMENT TO:
P.O. BOX 4000-58
PORTLAND, OREGON 97208

INVOICE

M/V "Nerezine" and Owner
c/o Matson Navigation Corporation
2020 S.W. 4th, Suite 940
Portland, Oregon 97205

DATE April 7, 1988
OUR JOB NO. 3311
CUSTOMER'S ORDER NO.
CONTRACT NO.
INVOICE NO. 3311
TERMS Net

CUSTOMER CODE NUMBER: 011988

Duns No. 00-902-8580

"M/V Nerezine"
Partial Billing

To accomplish repairs and betterments to the subject vessel as per attached specifications, Number 1 thru Number 8.

TOTAL AMOUNT DUE THIS INVOICE $78,728.80

Partial
Calley
Net

PAST DUE PAYMENTS SHALL BEAR INTEREST AT THE HIGHEST LAWFUL RATE UNTIL REPAID, NOT TO EXCEED 1½% PER MONTH.

CORRESPONDENCE ADDRESS P.O. BOX 3109 PORTLAND, OREGON 97208 PHONE (503) 285-7557

NWMAR128357

NORTHWEST MARINE IRON WORKS

Item #1 Cargo Boom Padeye and Shackle Repairs on Live Boom $ 7,624.00
Furnish labor, material and equipment to remove shackles from topping lift padeyes on boom point, a total of ten (10). Remove shackles from purchased boom point padeyes, a total of five (5). Build up by welding all padeyes to original, grind smooth and renew all shackles. Topping lift shackles ten (10) Owner furnished. (70 m.m. safety chain shackles) Purchase shackles five (5) contractor furnished. (2 inch dia. safety chain shackles.

Item #2 Winch Brake Repairs $51,958.00
Furnish labor, material and equipment to remove from vessel and reline fifteen (15) cargo winch brake bands as original. Drums to be hand sealed. Hand operating mechanism to be made operable.

Furnish labor, material and equipment to renew five (5) slewing winch deteriorated brake bands. Remove padeyes and linkages from deteriorated brake bands and install on new bands.

Furnish labor, material and equipment to fair up by heating and straightening winch drum guards as directed.

Item #3 Label Plates $ 315.00
Furnish labor, material and equipment to replace missing label plates on slewing winch controls for #1 and #2 booms.

Item #4 Limit Switches $ 1,716.00
Furnish labor, material and equipment to prove all limit switches and alarms to be operational on all five booms.

Item #5 Aloft Cargo Gear Survey $ 2,974.00
Furnish labor, material and equipment to survey all aloft blocks, sheeves, shackles and swivels in presence of A.B.S. Surveyor.

Item #6 Hydraulic Assemblies $ 4,476.00
Furnish labor, material and equipment to free up ten (10) hydraulic assemblies for the winches.

Item #7 Proof Testing $ 1,718.00
Furnish labor, material and equipment to proof test five (5) each, 25 metric booms to 30 metric ton with A.B.S. Inspector present.

Item #8 Travel Time and Transportation Charges $ 7,947.80
Furnish travel time and transportation charges in accordance with labor union contracts and agreements for work accomplished in Vancouver, Washington.

TOTAL AMOUNT DUE THIS INVOICE $78,728.80
==========

32

NORTHWEST MARINE IRON WORKS

SHIP REPAIRERS
GENERAL MACHINE WORK
ENGINEERING

MAIL PAYMENT TO:
P.O. BOX 4000-58
PORTLAND, OREGON 97208

INVOICE

M/V "Hellespont Vanguard"
c/o General Steamship Corporation
421 S.W. 6th Avenue, Suite 410
Portland, Oregon 97204

DATE April 13, 1988
OUR JOB NO. 3316
CUSTOMER'S ORDER NO.
CONTRACT NO.
INVOICE NO. 3316
TERMS Net

CUSTOMER CODE NUMBER: 006200

Duns No. 00-902-8580

"M/V Hellespont Vanguard"

To accomplish repairs and betterments to the subject vessel as per attached specifications, Number 1 thru Number 4.

TOTAL AMOUNT DUE THIS INVOICE $9,207.50
==========

FINAL
Collen
Net

PAST DUE PAYMENTS SHALL BEAR INTEREST AT THE HIGHEST LAWFUL RATE UNTIL REPAID, NOT TO EXCEED 1½% PER MONTH.

CORRESPONDENCE ADDRESS P.O. BOX 3109 PORTLAND, OREGON 97208 PHONE (503) 285-7557

NWMAR128359

NORTHWEST MARINE IRON WORKS

M/V "HELESPONT VANGUARD"

c/o General Steamship Corporation
421 S.W. 6th Avenue, Suite 410
Portland, Oregon 97204

Job No. 3316
April 8, 1988

U.S. COAST GUARD & FIRE MARSHAL WELDING BURNING PERMITS & SERVICES

In accordance with the Contractor's practice of strict adherence to the current U.S. Coast Guard Regulations as applicable to repairs and removals in way of International and U.S. Vessels, U.S. Coast Guard Hot Work Permits must be obtained from the Port Terminal Manager or Superintendent prior to commencing any hot work on vessel. Upon completion of all repairs, one (1) copy of same hot work permit must be returned to the Terminal Manager or Superintendent. Provide one (1) Fire Marshal's burning and welding permit as needed per Craft and each twenty-four (24) hour period. Provide services at each Terminal as required.

Furnish labor, material and equipment to attend the vessel at Astoria, Oregon on April 8, 1988 to accomplish the following repairs to the crane boom.

Item #1 Gas Free Certificate $ 950.00
Furnish services of certified Chemist to check area(s) as designated and issue "Safe For Fire" Certificates.

Item #2 Boom Repair $5,856.00
Furnish labor, material and equipment to repair damage to the boom on the #3 crane as directed by Owner's Representative. Erect staging, crop outdamaged area on cord of boom about 8' ft. from heel. Install one (1) each 3/8" x 10 1/2" x 9 1/2" x 36" long Grade A steel plate insert broke at 90 degree angle with 3" radius corners and weld 100%.

Item #3 Pull Test $ 735.00
Furnish labor and dynanometer, rig and pull test #3 crane to 30 metric tons at 25 degree angle in presence and to the satisfaction of the attending Nippon Kaiji Kyokai Surveyor, Chief Officer and other interested parties. Upon completion of the above repairs, remove all equipment from vessel into Contractor's vehicle and transport back to Contractor's repair facility in Portland, Oregon.

Item #4 Travel Time and Transportation Charges $1,666.50
Furnish premium time as authorized to accomplish repairs so as not to interfere with vessel's cargo commitments.

TOTAL AMOUNT DUE THIS INVOICE $9,207.50
=========

/

NORTHWEST MARINE IRON WORKS

39

SHIP REPAIRERS
GENERAL MACHINE WORK
ENGINEERING

MAIL PAYMENT TO:
P.O. BOX 4000-58
PORTLAND, OREGON 97208

INVOICE

M/V "Eastern Venture" and Owner
c/o International Shipping Company
Commonwealth Bldg. 421 S.W. 6th Avenue
Portland, Oregon 97205

DATE April 14, 1988
OUR JOB NO. 3317
CUSTOMER'S ORDER NO.
CONTRACT NO.
INVOICE NO. 3317
TERMS Net

CUSTOMER CODE NUMBER: 008520

Duns No. 00-902-8580

M/V "Eastern Venture"

To accomplish repairs to the subject vessel as per the attached specifications number 1 through number 3.

TOTAL AMOUNT DUE THIS INVOICE $3,504.20

FINAL
CA/leg
NET

PAST DUE PAYMENTS SHALL BEAR INTEREST AT THE HIGHEST LAWFUL RATE UNTIL REPAID. NOT TO EXCEED 1½% PER MONTH.

CORRESPONDENCE ADDRESS P.O. BOX 3109 PORTLAND, OREGON 97208 PHONE (503) 285-7557

NWMAR128361

NORTHWEST MARINE IRON WORKS

M/V "EASTERN VENTURE" and Owner

c/o International Shipping Company
Commonwealth Blvd. 421 S.W. 6th Avenue
Portland, Oregon 97205

April 13, 1988

Item #1 Ballast Water Pumping $2,705.00

Furnish labor, material and equipment to pump approximately six hundred (600) tons of water from ballast tanks, as directed by the Owners Representative. The contractor is to provide temporary pumps with hoses and compressed air in order to pump water through open manholes in the tanks. Vessels crew is to provide assistance in opening and closing manholes and rigging equipment on and off the launch.

Item #2 Travel Time & Transportation Charges $ 359.20

Furnish travel time and transportation charges to accomplish the work as outlined while at anchor in Longview, Washington and at the Grain Elevator in Kalama, Washington.

Item #3 Premium Time $ 440.00

Furnish premium time as authorized to accomplish work scope so as not to interfere with vessel's cargo commitments.

TOTAL AMOUNT DUE THIS INVOICE $3,504.20

Yo

NORTHWEST MARINE IRON WORKS

SHIP REPAIRERS
GENERAL MACHINE WORK
ENGINEERING

MAIL PAYMENT TO:
P.O. BOX 4000-58
PORTLAND, OREGON 97208

INVOICE

M/V "Green Bay" and Owners
Central Gulf Lines Inc.
International Trade Mart
New Orleans, LA 70130

DATE April 14, 1988
OUR JOB NO. 3306
CUSTOMER'S ORDER NO. 51248
CONTRACT NO.
INVOICE NO. 3306-B
TERMS Net

CUSTOMER CODE NUMBER: 002040

Duns No. 00-902-8580

"M/V Green Bay"

To accomplish repairs to the subject vessel as per the attached specifications number 1 through number 5.

TOTAL AMOUNT	$91,817.65
AGREED DISCOUNT (April 14, 1988)	(3,000.00)
TOTAL AMOUNT DUE THIS INVOICE	$88,817.65

Final
Calley
NET

PAST DUE PAYMENTS SHALL BEAR INTEREST AT THE HIGHEST LAWFUL RATE UNTIL REPAID, NOT TO EXCEED 1½% PER MONTH.

NWMAR128363

NORTHWEST MARINE IRON WORKS

M/V "GREEN BAY" and Owners
Central Gulf Lines, Inc.
International Trade Mart
New Orleans, LA 70130 (Original 3/23/88 Sheridan)

Job No. 3306
March 18, 1988

Item # 1 Services $ 6,628.65

Furnish labor, material and equipment to connect and provide temporary services as required to accomplish specified work. Disconnect all services upon departure of vessel.

A. Safe berth
B. Linesmen
C. Temporary fire protection
D. Gas and oxygen
E. Air
F. Gangway
G. Power

Labor: $1,776.00
Port of Portland: $4,852.65

Item # 2 Marine Chemist Certificate $ 1,500.00

Furnish services of Certified Marine Chemist to check area(s) as designated and issue "Safe For Workers" and "Safe For Fire" certificates.

Item # 3 #3 Center Fuel Oil Tank: $26,359.00

Furnish labor, material and equipment to pump out and dispose of the remaining fuel oil in No. 3 center fuel oil tank. Furnish labor, material and equipment to wash down tank, obtain gas free certificate and leave area "Safe For Personnel and Hot Work".

Labor:	676 hours @ $35.00	$25,009.00
Material:		$ 660.00
S-C:		$ 690.00

Item # 4 Fracture Repairs $49,795.00

Furnish labor, material and equipment to repair fractures in #3 center fuel oil tank and # 3 port and stbd ballast tank. All fractures are located at frame #117.

A) #3 Port Ballast Tank

#7 deck long, safe end 1" crack by drilling hole. Arc out crank and reweld. Swash bulkhead lighting hole, safe end 8" crack by drilling hole. Arc out crack and reweld. Fabricate new doubler ring 3/8" X 23 1/2" X 27 1/2". Weld doubler ring over lighting hole and weld 100 %. (Sketch "C")

Corner of swash bulkhead fore and aft and swash bulkhead port and stbd, forward and aft side brackets. Cut out a 6" radius "rat" hole in fore and aft brackets at intersection of bulkheads. Arc out a 6" crack in vertical seam and reweld.

Fabricate and install a new inset in way of "rat" hole and weld 100%. Dye penetrant test when complete. Burn a 2" hole in bracket 12" from bulkheads for water drainage. (Sketch "D")

B) #3 Stbd Ballast Tank

Repair four (4) bulkhead cracks in stbd ballast tank inboard of fore and aft swash bulkhead as shown in Sketch "B".

C) #12 Deck Repairs

Arc out and reweld four (4) cracks in overhead at frame #117. Crop out existing port and stbd 1" X 20" X 48 1/2" 12" radius plate in frame #117. Fabricate and reinstall using 1 1/4" ABS "AH" plate. U.T. test welds 100% when complete (Sketch "A")

D) #3 Center Fuel Oil Tank

Crop out fractured blhd directly under new inserts in Para "C". Fabricate in three (3) pieces new inset using mild steel 1" X 13 3/4" X 64" and weld 100%. Inserts to be port and stbd of centerline. (Sketch "E")

Crop out a 35" long section of #2 deck overhead long and fabricate new 4" x 7 7/8" angle iron stiffner as shown in Sketch "F".

E) #9 and #10 Deck Ramp

Arc out one (1) port and one (1) stbd total of two (2) cracks on brackets for #9 and #10 ramp. Reweld brackets and fabricate new 3/8" X 4" X 12" bracket to extend the existing brackets.

When complete with work touch up with coal tar epoxy all damaged areas in #3 port and stbd ballast tanks. No paint in #3 center fuel oil tank. Clean tank for Chief Mate and Chief Engineer inspections. Plug all cent lines and apply a 1 lb. test on tank for U.S. Coast Guard, A.B.S. and owners satisfaction when complete remove plugs and close tanks.

Labor: 1,213 hours @$35.00	$44,875.00
Material:	$ 4,920.00

Item # 5 <u>Premium Time</u> $7,535.00

Furnish necessary premium time as authorized so as to interfere with vessel's cargo commitment.

TOTAL AMOUNT	$91,817.65
AGREED DISCOUNT (APRIL 14, 1988)	(3,000.00)
TOTAL AMOUNT DUE THIS INVOICE	$88,817.65

41

NORTHWEST MARINE IRON WORKS

SHIP REPAIRERS
GENERAL MACHINE WORK
ENGINEERING

MAIL PAYMENT TO:
P.O. BOX 4000-58
PORTLAND, OREGON 97208

INVOICE

M/V "Green Bay" and Owners
Central Gulf Lines Inc.
International Trade Mart
New Orleans, LA 70130

DATE	April 14, 1988
OUR JOB NO.	3306
CUSTOMER'S ORDER NO.	51248
CONTRACT NO.	
INVOICE NO.	3306-A
TERMS	Net

CUSTOMER CODE NUMBER: 002040

Duns No. 00-902-8580

"M/V Green Bay"

To cancel Invoice Number 3306, dated March 28, 1988 in its entirety. ($91,817.65)

Calley
NET

PAST DUE PAYMENTS SHALL BEAR INTEREST AT THE HIGHEST LAWFUL RATE UNTIL REPAID, NOT TO EXCEED 1½% PER MONTH.

CORRESPONDENCE ADDRESS P.O. BOX 3109 PORTLAND, OREGON 97208 PHONE (503) 285-7557

NWMAR128366

NORTHWEST MARINE IRON WORKS

58 ✓

SHIP REPAIRERS
GENERAL MACHINE WORK
ENGINEERING

MAIL PAYMENT TO:
P.O. BOX 4000-58
PORTLAND, OREGON 97208

INVOICE

M/V "Veni II" and Owners
c/o Transmarine Navigation Corp.
600 N. W. Front Avenue
Suite 1
Portland, OR 97209

DATE Apr 21, 1988
OUR JOB NO. 3318
CUSTOMER'S ORDER NO.
CONTRACT NO.
INVOICE NO. 3318
TERMS Net

CUSTOMER CODE NUMBER: 30710 ~~30720~~

Duns No. 00-902-8580

M/V "Veni II"

To accomplish repairs and betterments on the subject vessel, as per attached specification #1.

TOTAL AMOUNT DUE THIS INVOICE: $1,126.00

final Calley net

PAST DUE PAYMENTS SHALL BEAR INTEREST AT THE HIGHEST LAWFUL RATE UNTIL REPAID, NOT TO EXCEED 1½% PER MONTH.

CORRESPONDENCE ADDRESS P.O. BOX 3109 PORTLAND, OREGON 97208 PHONE (503) 285-7557

NWMAR128367

89 — 1

NORTHWEST MARINE IRON WORKS

SHIP REPAIRERS
GENERAL MACHINE WORK
ENGINEERING

MAIL PAYMENT TO:
P.O. BOX 4000-58
PORTLAND, OREGON 97208

INVOICE

M/V "Nerezine" and Owners
c/o Matson Agencies, Inc.
1618 S.W. First Avenue, Suite 415
Portland, Oregon 97201

DATE	April 29, 1988
OUR JOB NO.	3311
CUSTOMER'S ORDER NO.	
CONTRACT NO.	
INVOICE NO.	3311 A
TERMS	Net

CUSTOMER CODE NUMBER: 11988

Duns No. 00-902-8580

"M/V Nerezine"

To accomplish repairs to the subject vessel are per the attached specifications number 1 through 3.

TOTAL AMOUNT DUE $1,024.00
=========

Partial
Called
NET

PAST DUE PAYMENTS SHALL BEAR INTEREST AT THE HIGHEST LAWFUL RATE UNTIL REPAID. NOT TO EXCEED 1½% PER MONTH.

CORRESPONDENCE ADDRESS P.O. BOX 3109 PORTLAND, OREGON 97208 PHONE (503) 285-7557

NWMAR128368

NORTHWEST MARINE IRON WORKS

SHIP REPAIRERS
GENERAL MACHINE WORK
ENGINEERING

MAIL PAYMENT TO:
P.O. BOX 4000-58
PORTLAND, OREGON 97208

INVOICE

M/V "Nerezine" and Owners
c/o Matson Agencies, Inc.
1618 S.W. First Avenue, Suite 415
Portland, Oregon 97201

DATE April 29, 1988
OUR JOB NO. 3311
CUSTOMER'S ORDER NO.
CONTRACT NO.
INVOICE NO. 3311 B
TERMS Net

CUSTOMER CODE NUMBER: 11988

Duns No. 00-902-8580

"M/V Nerezine"

To accomplish repairs to the subject vessel in accordance with specifications number 1 through number 10.

TOTAL AMOUNT DUE $69,629.00

FINAL
Call/ey
Net

PAST DUE PAYMENTS SHALL BEAR INTEREST AT THE HIGHEST LAWFUL RATE UNTIL REPAID, NOT TO EXCEED 1½% PER MONTH

CORRESPONDENCE ADDRESS P.O. BOX 3109 PORTLAND, OREGON 97208 PHONE (503) 285-7557

NWMAR128369

NORTHWEST MARINE IRON WORKS

91

SHIP REPAIRERS
GENERAL MACHINE WORK
ENGINEERING

MAIL PAYMENT TO:
P.O. BOX 4000-58
PORTLAND, OREGON 97208

INVOICE

M/V "Norman Queen" and Owners
c/o O.S.L. Shipping and Development Inc.
681 5th Avenue
New York, New York 10022

DATE	April 29, 1988
OUR JOB NO.	3227
CUSTOMER'S ORDER NO.	
CONTRACT NO.	
INVOICE NO.	3337
TERMS	Net Upon Receipt of Invoice

CUSTOMER CODE NUMBER: 015425

Duns No. 00-902-8580

"M/V Norman Queen"

To accomplish repairs to the subject vessel in accordance with specifications number 1 through number 6.

TOTAL AMOUNT DUE $34,309.97

==========

Final
Calley
Net

PAST DUE PAYMENTS SHALL BEAR INTEREST AT THE HIGHEST LAWFUL RATE UNTIL REPAID, NOT TO EXCEED 1½% PER MONTH.

CORRESPONDENCE ADDRESS P.O. BOX 3109 PORTLAND, OREGON 97208 PHONE (503) 285-7557

NWMAR128370

NORTHWEST MARINE IRON WORKS

SHIP REPAIRERS
GENERAL MACHINE WORK
ENGINEERING

MAIL PAYMENT TO:
P.O. BOX 4000-58
PORTLAND, OREGON 97208

INVOICE

M/V Veropeso V/8804/and Owners
c/o First Ocean Marine
424 1/2 Fifth Avenue South
P.O. Box C2012-136
Edmonds, WA 98020

Attention: Mr. John Nordgren

CUSTOMER CODE NUMBER: 04786

DATE	May 6, 1988
OUR JOB NO.	3321
CUSTOMER'S ORDER NO.	
CONTRACT NO.	
INVOICE NO.	3321-B
TERMS	Net

Duns No. 00-902-8580

M/V VEROPESO

Furnish labor and material for services performed on the M/V "Veropeso".

TOTAL AMOUNT DUE THIS INVOICE: $17,450.00

PAST DUE PAYMENTS SHALL BEAR INTEREST AT THE HIGHEST LAWFUL RATE UNTIL REPAID, NOT TO EXCEED 1½% PER MONTH.

CORRESPONDENCE ADDRESS P.O. BOX 3109 PORTLAND, OREGON 97208 PHONE (503) 285-7557

NWMAR128371

NORTHWEST MARINE IRON WORKS
INVOICES BY CALLEY

MONTH OF March 1988

CUSTOMER	SHIP	INVOICE NUMBER	INVOICE AMOUNT	DATE PAYMENT RECEIVED	PERCENT	AMOUNT	DATE PAID	CHECK NUMBER	
International Shipping	M/V Hakufu	3295	4,123.00	3/28/88	10%	412.30			?
Hyundai Merchant Marine Co. Inc	M/V Hyundai II	3291	N/C	—	0	0	—	—	
Maritime Overseas Corp	Overseas Boston	3287	379.00	4/18/88	10%	37.90	4/29	220521	
Central Gulf Lines	Green Bay	3301	6,775.00			2,057.50	3-4-88	220572	S Miller approved commission prepay
Cunard Line	Vistafjord	3271-A	468.52	5/16/88	10%	46.85	5-31-88	220533	
Chantiers De L'Atlantique	Noordam + Nieuw Amsterdam	3110-0	1,500.00	5-3-88	10%	150.00	5/13	220528	
Holland America	Noordam	3299	5,206.00	6-13-88	10%	520.60	6-15	220544	
Nedlloyd	Herrard Patrick Purcell	3304	13,407.40	5-9-88	10%	1,340.74	5/13	220528	
Central Gulf Lines	M/V Green Bay	3307	3,150.00	4-22-88	10%	315.00	8/15/88	220569	
Norton, Lilly + Company	C.S. Northern	3302	3,113.00	4/27/88	10%	311.30	4/29	220521	
Internal Shipping	M/V Eastern Splendor	3305	1,157.00	5-2-88	10%	115.70	5/13	220528	
Central Gulf Lines	M/V Green Bay	3306	91,817.65				CR issued	& rebilled	
Cascade Shipping	M/V South South	3278	332.00	2/29/88	10%	33.20			?
Cascade Shipping	M/V New Marquesa	3312	11,950.00	4/27/88	10%	1,195.00	4/29	220521	

put thru w/ Gavin S/B Calley

NWMAR128372

9

NORTHWEST MARINE IRON WORKS

SHIP REPAIRERS
GENERAL MACHINE WORK
ENGINEERING

MAIL PAYMENT TO:
P.O. BOX 4000-58
PORTLAND, OREGON 97208

INVOICE

M/V "Hakufu" and Owners
c/o International Shipping
Common Wealth Building
421 S. W. 6th Avenue
Portland, OR 97204

DATE Mar 2, 1988
OUR JOB NO. 3295
CUSTOMER'S ORDER NO.
CONTRACT NO.
INVOICE NO. 3295
TERMS Net

CUSTOMER CODE NUMBER: 08520

Duns No. 00-902-8580

M/V "Hakufu"

To accomplish repairs and betterments to the subject vessel, as per attached Specifications No. 1 through 4.

TOTAL AMOUNT DUE THIS INVOICE: $4,123.00

Final Calley Net

PAST DUE PAYMENTS SHALL BEAR INTEREST AT THE HIGHEST LAWFUL RATE UNTIL REPAID, NOT TO EXCEED 1½% PER MONTH.

CORRESPONDENCE ADDRESS P.O. BOX 3109 PORTLAND, OREGON 97208 PHONE (503) 285-7557

NWMAR128373

10

NORTHWEST MARINE IRON WORKS

SHIP REPAIRERS
GENERAL MACHINE WORK
ENGINEERING

MAIL PAYMENT TO:
P.O. BOX 4000-58
PORTLAND, OREGON 97208

INVOICE

M/V "Hyundai II" and Owners
c/o Hyundai Merchant Marine Co., Inc.
1515 S. W. 5th Avenue
Suite 1050
Portland, OR 97201

DATE Mar 2, 1988
OUR JOB NO. 3291
CUSTOMER'S ORDER NO.
CONTRACT NO.
INVOICE NO. 3291
TERMS Net

CUSTOMER CODE NUMBER: 07772

Duns No. 00-902-8580

M/V "Hyundai II"

To accomplish repairs and betterments to the subject vessel, as per attached Specification No. 1.

TOTAL AMOUNT DUE THIS INVOICE: NO CHARGE

Final Calley Net

PAST DUE PAYMENTS SHALL BEAR INTEREST AT THE HIGHEST LAWFUL RATE UNTIL REPAID, NOT TO EXCEED 1½% PER MONTH.

CORRESPONDENCE ADDRESS P.O. BOX 3109 PORTLAND, OREGON 97208 PHONE (503) 285-7557

NORTHWEST MARINE IRON WORKS

SHIP REPAIRERS
GENERAL MACHINE WORK
ENGINEERING

MAIL PAYMENT TO:
P.O. BOX 4000-58
PORTLAND, OREGON 97208

INVOICE

M/V "Overseas Boston" and Owners
c/o Maritime Overseas Corp.
43 West 42nd Street
New York, New York 10036

DATE Mar 2, 1988
OUR JOB NO. 3287
CUSTOMER'S ORDER NO.
CONTRACT NO.
INVOICE NO. 3287
TERMS Net

CUSTOMER CODE NUMBER: 11720

Duns No. 00-902-8580

M/V "Overseas Boston"

To accomplish repairs and betterments to the subject vessel, as per attached Specification No. 1.

TOTAL AMOUNT DUE THIS INVOICE: $379.00

Final Calley Net

PAST DUE PAYMENTS SHALL BEAR INTEREST AT THE HIGHEST LAWFUL RATE UNTIL REPAID, NOT TO EXCEED 1½% PER MONTH.

CORRESPONDENCE ADDRESS P.O. BOX 3109 PORTLAND, OREGON 97208 PHONE (503) 285-7557

NWMAR128375

NORTHWEST MARINE IRON WORKS

SHIP REPAIRERS
GENERAL MACHINE WORK
ENGINEERING

MAIL PAYMENT TO:
P.O. BOX 4000-58
PORTLAND, OREGON 97208

INVOICE

M/V "Green Bay" and Owners
c/o Central Gulf Lines, Inc.
International Trade Mart
New Orleans, LA 70130

Attention: Mr. J.S. Monaghan Jr.

DATE	Mar 7, 1988
OUR JOB NO.	3301
CUSTOMER'S ORDER NO.	51246
CONTRACT NO.	
INVOICE NO.	3301
TERMS	Net

CUSTOMER CODE NUMBER: 02040

Duns No. 00-902-8580

"M/V GREEN BAY"

To accomplish repairs and betterments to the subject vessel, as per attached specifications nos. 1 and 2.

TOTAL AMOUNT DUE THIS INVOICE: $6,775.00

Final Calley Net

PAST DUE PAYMENTS SHALL BEAR INTEREST AT THE HIGHEST LAWFUL RATE UNTIL REPAID, NOT TO EXCEED 1½% PER MONTH.

CORRESPONDENCE ADDRESS P.O. BOX 3109 PORTLAND, OREGON 97208 PHONE (503) 285-7557

NORTHWEST MARINE IRON WORKS

19 ✓

SHIP REPAIRERS
GENERAL MACHINE WORK
ENGINEERING

MAIL PAYMENT TO:
P.O. BOX 4000-58
PORTLAND, OREGON 97208

INVOICE

C/V "Vistafjord" and Owners
c/o Cunard Line LTD
555 Fifth Avenue
New York, New York 10017

Attention: Mr. Kjell Norvik

DATE Mar 4, 1988
OUR JOB NO. 3271
CUSTOMER'S ORDER NO.
CONTRACT NO.
INVOICE NO. 3271-A
TERMS Net

CUSTOMER CODE NUMBER: 02889

Duns No. 00-902-8580

C/V "Vistafjord"

Furnish freight charges to ship four (4) drop valves to "Vistafjord", Fort Lauderdale, Florida.

TOTAL AMOUNT DUE THIS INVOICE: $468.52

Final Calley Net

PAST DUE PAYMENTS SHALL BEAR INTEREST AT THE HIGHEST LAWFUL RATE UNTIL REPAID, NOT TO EXCEED 1½% PER MONTH.

CORRESPONDENCE ADDRESS P.O. BOX 3109 PORTLAND, OREGON 97208 PHONE (503) 285-7557

NWMAR128377

47

NORTHWEST MARINE IRON WORKS

SHIP REPAIRERS
GENERAL MACHINE WORK
ENGINEERING

MAIL PAYMENT TO:
P.O. BOX 4000-58
PORTLAND, OREGON 97208

INVOICE

Chantiers De L'Atlantique
Alshom-Atlantique
B.P. 400-44608
St. Nazaire, Cedex
FRANCE

DATE March 1, 1988
OUR JOB NO. 3110
CUSTOMER'S ORDER NO.
CONTRACT NO.
INVOICE NO. 3110-O
TERMS Net

CUSTOMER CODE NUMBER: 02119

Duns No. 00-902-8580

Warehouse charges for the main engine generator step-up gears, Ex-Noordam and Nieuw Amsterdam.

Charges for the month of March, 1988.

TOTAL AMOUNT DUE THIS INVOICE: $1,500.00

Partial Calley Net

PAST DUE PAYMENTS SHALL BEAR INTEREST AT THE HIGHEST LAWFUL RATE UNTIL REPAID, NOT TO EXCEED 1½% PER MONTH.

CORRESPONDENCE ADDRESS P.O. BOX 3109 PORTLAND, OREGON 97208 PHONE (503) 285-7557

NWMAR128378

72

NORTHWEST MARINE IRON WORKS

SHIP REPAIRERS
GENERAL MACHINE WORK
ENGINEERING

MAIL PAYMENT TO:
P.O. BOX 4000-58
PORTLAND, OREGON 97208

INVOICE

M/V "NOORDAM" and Owners
c/o Holland America Lines
300 Elliott Avenue West
Seattle, Washington 98110

Attention: Mr. J. L. Adriaanse

CUSTOMER CODE NUMBER: 07203

DATE	March 21, 1988
OUR JOB NO.	3299
CUSTOMER'S ORDER NO.	
CONTRACT NO.	
INVOICE NO.	3299
TERMS	Net

Duns No. 00-902-8580

M/S "NOORDAM"

Provide labor and material to crate up and ship the port propeller blades to:

M/S Noordam
c/o Newport News Shipbuilding & Drydock Company
Newport News, Virginia
Attention: Mr. Lloyd Ware

Propeller blades are to be shipped prepaid and in bond.

Total Amount Due This Invoice $5,206.00

FINAL
Calley
NET

PAST DUE PAYMENTS SHALL BEAR INTEREST AT THE HIGHEST LAWFUL RATE UNTIL REPAID, NOT TO EXCEED 1½% PER MONTH.

CORRESPONDENCE ADDRESS P.O. BOX 3109 PORTLAND, OREGON 97208 PHONE (503) 285-7557

NWMAR128379

/ 71

NORTHWEST MARINE IRON WORKS

SHIP REPAIRERS
GENERAL MACHINE WORK
ENGINEERING

MAIL PAYMENT TO:
P.O. BOX 4000-58
PORTLAND, OREGON 97208

INVOICE

M/V "GERARD PATRICK PURCELL" and Owners
c/o Nedlloyd
200 Market Building, Suite 1010
Portland, Oregon 97201

DATE March 25, 1988
OUR JOB NO. 3304
CUSTOMER'S ORDER NO.
CONTRACT NO.
INVOICE NO. 3304
TERMS Net

CUSTOMER CODE NUMBER: 014200

Duns No. 00-902-8580

"M/V GERARD PATRICK PURCELL"

TO ACCOMPLISH REPAIRS AND BETTERMENTS TO THE SUBJECT VESSEL, AS PER ATTACHED SPECIFICATIONS, NUMBER 1 THRU 6.

TOTAL AMOUNT DUE THIS INVOICE $13,407.40

FINAL
CALLED
NET

PAST DUE PAYMENTS SHALL BEAR INTEREST AT THE HIGHEST LAWFUL RATE UNTIL REPAID, NOT TO EXCEED 1½% PER MONTH.

CORRESPONDENCE ADDRESS P.O. BOX 3109 PORTLAND, OREGON 97208 PHONE (503) 285-7557

70

NORTHWEST MARINE IRON WORKS

SHIP REPAIRERS
GENERAL MACHINE WORK
ENGINEERING

MAIL PAYMENT TO:
P.O. BOX 4000-58
PORTLAND, OREGON 97208

INVOICE

M/V Green Bay and Owners
c/o Central Gulf Lines, Inc.
International Trade Mart
New Orleans, LA 70130

DATE March 25, 1988
OUR JOB NO. 3307
CUSTOMER'S ORDER NO.
CONTRACT NO.
INVOICE NO. 3307
TERMS Net

CUSTOMER CODE NUMBER: 002040

Duns No. 00-902-8560

"M/V GREEN BAY"

Furnish labor and materials to accomplish repairs to the subject vessel.

Manhole Covers

Furnish labor, material and equipment to install new manhole cover plates, port and stbd, on 12th deck void space. Fabricate and weld stud ring to bulkhead. Blast and paint and install cover plate using gromets and cad-plated washers and nuts.

TOTAL AMOUNT DUE THIS INVOICE $3,150.00

Final
Call by
NET

PAST DUE PAYMENTS SHALL BEAR INTEREST AT THE HIGHEST LAWFUL RATE UNTIL REPAID, NOT TO EXCEED 1½% PER MONTH.

CORRESPONDENCE ADDRESS P.O. BOX 3109 PORTLAND, OREGON 97208 PHONE (503) 285-7557

NWMAR128381

73

NORTHWEST MARINE IRON WORKS

SHIP REPAIRERS
GENERAL MACHINE WORK
ENGINEERING

MAIL PAYMENT TO:
P.O. BOX 4000-58
PORTLAND, OREGON 97208

INVOICE

C.S. "NORTHERN"
c/o Norton, Lilly & Company
200 Market Building, Suite 869
Portland, Oregon 97201

DATE: March 25, 1988
OUR JOB NO.: 3302
CUSTOMER'S ORDER NO.:
CONTRACT NO.: 3302
INVOICE NO.: Net
TERMS:

CUSTOMER CODE NUMBER: 015129

Duns No. 00-902-8580

"C.S. NORTHERN"

TO ACCOMPLISH REPAIRS TO SUBJECT VESSEL AS PER ATTACHED SPECIFICATION

TOTAL AMOUNT DUE THIS INVOICE $3,113.00

FINAL
Calley
NET

PAST DUE PAYMENTS SHALL BEAR INTEREST AT THE HIGHEST LAWFUL RATE UNTIL REPAID, NOT TO EXCEED 1½% PER MONTH.

CORRESPONDENCE ADDRESS P.O. BOX 3109 PORTLAND, OREGON 97208 PHONE (503) 285-7557

NWMAR128382

C.S. "NORTHERN" and Owners
c/o Norton, Lilly & Company
200 Market Place Suite 869
Portland, Oregon 97201

Job No. 3302
March 11, 1988

U.S. CUSTOMS REGULATIONS

In accordance with the Contractor's practice of strict adherence to the current U.S. Custom Regulations as applicable to repairs and renewals in way of international vessels, removal and return of all material and equipment as listed in the following specification items will be accomplished in accordance with U.S. Customs Regulations. All scrap material incurred during the normal course of the repair period will be returned to the vessel for disposal at the Owner's discretion.

Item #1 Diesel Bearing Shells $ 2,283.00

Sent Driver and Machinist to Astoria to receive diesel bearing and machining print for remetaling of bearings, as per Chief Engineer instructions. After completion of bearing, they are to be returned to Astoria Ships Agent, Dave Owen at Ship Service Company.

Travel Time and Transportation Charges $ 830.00

Furnish travel time and transportation charges to accomplish repairs in Astoria, Oregon in accordance with Labor Union contracts and agreements.

Work authorized and directed by Andy Ferguson, Chief Engineer.

TOTAL AMOUNT DUE THIS INVOICE $ 3,113.00

74

NORTHWEST MARINE IRON WORKS

SHIP REPAIRERS
GENERAL MACHINE WORK
ENGINEERING

MAIL PAYMENT TO:
P.O. BOX 4000-58
PORTLAND, OREGON 97208

INVOICE

M/V "EASTERN SPLENDOR" and Owners
c/o International Shipping Company
421 S.W. 6th Avenue, Commonwealth Bldg.
Portland, Oregon 97205

DATE	March 25, 1988
OUR JOB NO.	3305
CUSTOMER'S ORDER NO.	
CONTRACT NO.	3305
INVOICE NO.	Net
TERMS	

CUSTOMER CODE NUMBER: 008520

"M/V EASTERN SPLENDOR"

Duns No. 00-902-8580

TO ACCOMPLISH REPAIRS TO THE SUBJECT VESSEL

AS PER ATTACHED SPECIFICATIONS, ITEM 1 AND 2

TOTAL AMOUNT DUE THIS INVOICE $1,157.00

FINAL
Calley
NET

PAST DUE PAYMENTS SHALL BEAR INTEREST AT THE HIGHEST LAWFUL RATE UNTIL REPAID, NOT TO EXCEED 1½% PER MONTH

CORRESPONDENCE ADDRESS P.O. BOX 3109 PORTLAND, OREGON 97208 PHONE (503) 285-7557

NWMAR128384

M/V "EASTERN SPLENDOR" and Owners
c/o International Shipping Company
421 S.W. 6th Avenue, Commonwealth Bldg.
Portland, Oregon 97205

Job No. 3305
March 11, 1988

U.S. CUSTOMS REGULATIONS

In accordance with the Contractor's practice of strict adherence to the current U.S. Custom Regulations as applicable to repairs and renewals in way of international vessels, removal and return of all material and equipment as listed in the following specification items will be accomplished in accordance with U.S. Customs Regulations. All scrap material incurred during the normal course of the repair period will be returned to the vessel for disposal at the Owner's discretion.

Provide labor, material and equipment to attend the vessel at Longview Anchorage, on March 10, 1988 to accomplish the following survey and repair.

Item #1 Transportation $ 257.00

Furnish labor and transportation to receive (1) one each damaged hook from Longview, Washington Port Dock Berth #5 and deliver to repair facilities in Portland, Oregon. Upon completion of repairs, return hook to the Peavey Grain Dock in Kalama, Washington via Customs.

Item #2 Hook Repair $ 840.00

Provide labor and material and equipment to repair 6 ft. long hook. Mid section of hook bowed edge ways 6". size of mid section 2 1/4" thick, 5" wide by 4 ft. long set up in hydraulic press brake and straighten hook as original. Returned hook to vessel crew to reinstall.

Premium Time $ 60.00

Furnish premium time as authorized to accomplish repairs so as not to interfere with vessel's cargo commitments.

ALL ABOVE WORK WAS ACCOMPLISHED SATISFACTORILY
AND TO ACCOUNT OF VESSEL AND OWNERS

TOTAL AMOUNT DUE THIS INVOICE $ 1,157.00

M/V "Eastern Splendor"

c/o International Shipping Company
421 S.W. 6th Avenue, Commonwealth Bldg.
Portland, Oregon 97205

Job No. 3305
March 11, 1988

U.S. CUSTOMS REGULATIONS

In accordance with the Contractor's practice of strict adherence to the current U.S. Custom Regulations as applicable to repairs and renewals in way of international vessels, removal and return of all material and equipment as listed in the following specification items will be accomplished in accordance with U.S. Customs Regulations. All scrap material incurred during the normal course of the repair period will be returned to the vessel for disposal at the Owner's discretion.

Provide labor, material and equipment to attend the vessel at Longview Anchorage, on March 10, 1988 to accomplish the following survey and repair.

Item #1 Transportation

Provide truck to transport (1) one each damaged hook from Longview, Washington Port Dock Berth #5 to repair facilities in Portland, Oregon. Upon completion of repairs, return hook to the P.V. Dock in Kalama, Washington via Customs.

Item #2 Hook Repair

Provide labor, material and equipment to repair 6 ft. long hook. Mid section of hook bowed edge ways 6". Size of mid section 2 1/4" thick, 5" wide by 4 ft. long set up in hydraulic press brake and straighten hook as original. Returned hook to vessel crew to reinstall.

Premium Time

Furnish premium time as authorized to accomplish repairs so as not to interfere with vessel's cargo commitments.

ALL ABOVE WORK WAS ACCOMPLISHED SATISFACTORILY
AND TO ACCOUNT OF VESSEL AND OWNERS

Chief Mate

Captain

EASTERN SPLENDOR

75

NORTHWEST MARINE IRON WORKS

SHIP REPAIRERS
GENERAL MACHINE WORK
ENGINEERING

MAIL PAYMENT TO:
P.O. BOX 4000-58
PORTLAND, OREGON 97208

INVOICE

M/V "Green Bay" and Owners
Central Gulf Lines Inc.
International Trade Mart
New Orleans, LA 70130

DATE	March 28, 1988
OUR JOB NO.	3306
CUSTOMER'S ORDER NO.	51248
CONTRACT NO.	
INVOICE NO.	3306
TERMS	Net

CUSTOMER CODE NUMBER: 002040

Duns No. 00-902-8580

"M/V Green Bay"

To accomplish repairs to the subject vessel as per the attached specifications number 1 through number 5.

TOTAL AMOUNT DUE THIS INVOICE $91,817.65

FINAL
CALLEY
NET

PAST DUE PAYMENTS SHALL BEAR INTEREST AT THE HIGHEST LAWFUL RATE UNTIL REPAID, NOT TO EXCEED 1½% PER MONTH.

CORRESPONDENCE ADDRESS P.O. BOX 3109 PORTLAND, OREGON 97208 PHONE (503) 285-7557

NORTHWEST MARINE IRON WORKS

M/V "GREEN BAY" and Owners
Central Gulf Lines, Inc.
International Trade Mart
New Orleans, LA 70130 (Original 3/23/88 Sheridan)

Job No. 3306
March 18, 1988

Item # 1 Services $ 6,628.65

Furnish labor, material and equipment to connect and provide temporary services as required to accomplish specified work. Disconnect all services upon departure of vessel.

A. Safe berth
B. Linesmen
C. Temporary fire protection
D. Gas and oxygen
E. Air
F. Gangway
G. Power

Labor: $1,776.00
Port of Portland: $4,852.65

Item # 2 Marine Chemist Certificate $ 1,500.00

Furnish services of Certified Marine Chemist to check area(s) as designated and issue "Safe For Workers" and "Safe For Fire" certificates.

Item # 3 #3 Center Fuel Oil Tank: $26,359.00

Furnish labor, material and equipment to pump out and dispose of the remaining fuel oil in No. 3 center fuel oil tank. Furnish labor, material and equipment to wash down tank, obtain gas free certificate and leave area "Safe For Personnel and Hot Work".

Labor:	676 hours @ $35.00	$25,009.00
Material:		$ 660.00
S-C:		$ 690.00

Item # 4 Fracture Repairs $49,795.00

Furnish labor, material and equipment to repair fractures in #3 center fuel oil tank and # 3 port and stbd ballast tank. All fractures are located at frame #117.

A) #3 Port Ballast Tank

#7 deck long, safe end 1" crack by drilling hole. Arc out crank and reweld. Swash bulkhead lighting hole, safe end 8" crack by drilling hole. Arc out crack and reweld. Fabricate new doubler ring 3/8" X 23 1/2" X 27 1/2". Weld doubler ring over lighting hole and weld 100 %. (Sketch "C")

Corner of swash bulkhead fore and aft and swash bulkhead port and stbd, forward and aft side brackets. Cut out a 6" radius "rat" hole in fore and aft brackets at intersection of bulkheads. Arc out a 6" crack in vertical seam and reweld.

Fabricate and install a new inset in way of "rat" hole and weld 100%. Dye penetrant test when complete. Burn a 2" hole in bracket 12" from bulkheads for water drainage. (Sketch "D")

B) #3 Stbd Ballast Tank

Repair four (4) bulkhead cracks in stbd ballast tank inboard of fore and aft swash bulkhead as shown in Sketch "B".

C) #12 Deck Repairs

Arc out and reweld four (4) cracks in overhead at frame #117. Crop out existing port and stbd 1" X 20" X 48 1/2" 12" radius plate in frame #117. Fabricate and reinstall using 1 1/4" ABS "AH" plate. U.T. test welds 100% when complete (Sketch "A")

D) #3 Center Fuel Oil Tank

Crop out fractured blhd directly under new inserts in Para "C". Fabricate in three (3) pieces new inset using mild steel 1" X 13 3/4" X 64" and weld 100%. Inserts to be port and stbd of centerline. (Sketch "E")

Crop out a 35" long section of #2 deck overhead long and fabricate new 4" x 7 7/8" angle iron stiffner as shown in Sketch "F".

E) #9 and #10 Deck Ramp

Arc out one (1) port and one (1) stbd total of two (2) cracks on brackets for #9 and #10 ramp. Reweld brackets and fabricate new 3/8" X 4" X 12" bracket to extend the existing brackets.

When complete with work touch up with coal tar epoxy all damaged areas in #3 port and stbd ballast tanks. No paint in #3 center fuel oil tank. Clean tank for Chief Mate and Chief Engineer inspections. Plug all cent lines and apply a 1 lb. test on tank for U.S. Coast Guard, A.B.S. and owners satisfaction when complete remove plugs and close tanks.

Labor:	1,213 hours @$35.00	$44,875.00
Material:		$ 4,920.00

Item # 5 <u>Premium Time</u> $7,535.00

Furnish necessary premium time as authorized so as to interfere with vessel's cargo commitment.

TOTAL AMOUNT DUE THIS INVOICE $91,817.65
==========

82

NORTHWEST MARINE IRON WORKS

SHIP REPAIRERS
GENERAL MACHINE WORK
ENGINEERING

MAIL PAYMENT TO:
P.O. BOX 4000-58
PORTLAND, OREGON 97208

INVOICE

M/V "New Marquesa" and Owners
Cascade Shipping Company
806 S.W. Broadway, Suite 550
Portland, Oregon 97205

DATE March 31, 1988
OUR JOB NO. 3312
CUSTOMER'S ORDER NO.
CONTRACT NO.
INVOICE NO. 3312
TERMS Net

CUSTOMER CODE NUMBER: 001948

Duns No. 00-902-8580

"M/V New Marquesa"

To accomplish repairs to the subject vessel according to specifications number 1 through 5.

TOTAL AMOUNT DUE THIS INVOICE $11,950.00

FINAL
Calley
NET

PAST DUE PAYMENTS SHALL BEAR INTEREST AT THE HIGHEST LAWFUL RATE UNTIL REPAID, NOT TO EXCEED 1½% PER MONTH.

CORRESPONDENCE ADDRESS PO BOX 3109 PORTLAND OREGON 97208 PHONE

NWMAR128390

M/V "New Marquesa" and Owners
c/o Cascade Shipping Company
806 S.W. Broadway, Suite 550
Portland, Oregon 97205

Job No. 3312
March 31, 1988

U.S. CUSTOMS REGULATIONS

In accordance with the Contractor's practice of strict adherence to the current U.S. Custom Regulations as applicable to repairs and renewals in way of international vessels, removal and return of all material and equipment as listed in the following specification items will be accomplished in accordance with U.S. Customs Regulations. All scrap material incurred during the normal course of the repair period will be returned to the vessel for disposal at the Owner's discretion.

U.S. COAST GUARD AND FIRE MARSHAL WELDING BURNING PERMITS AND SERVICES

In accordance with the Contractor's practice of strict adherence to the current U.S. Coast Guard Regulations as applicable to repairs and removals in way of international and U.S. vessels, U.S. Coast Guard hot work permits must be obtained from the Port Terminal Manager or Superintendent prior to commencing any hot work on vessel. Upon completion of all repairs, one (1) copy of same hot work permit must be returned to the Terminal Manager or Superintendent.. Provide one (1) Fire Marshal's burning and welding permit as needed per Craft and each twenty-four (24) hour period. Provide services at each Terminal as required.

Item #1 #1 Cargo Crane Boom Repair $5,446.00

Furnish labor, material and equipment to repair damaged boom on #1 cargo crane. Erect staging, drill two (2) 1/2" holes in boom and circulate air to obtain Marine Chemist gas free certificate.

Install by welding a 1" X 6" X 24" strong back on boom. Crop out damaged section of boom and install by welding a new section 1/2" X 18" X 32" with 90 degree break. After inspection of welding by Surveyor remove staging. Apply a 30 ton weight test to crane using certified dynomometer and equipment to the satisfaction of Surveyor and Captain.

Item #2 Survey #2 Cargo Crane $1,584.00

Furnish the services of a qualified Hydraulic Service Technician, two (2) Machinists and one (1) Electrician to trouble shoot #2 cargo crane hydraulic system. Check all solenoids, limit switches, relief valves and control rod's for proper operation. Report all deficiencies to vessels Chief Engineer for resolution.

Item #3 Travel Time and Transportation Charges $ 868.00

Furnish travel time and transportation charges to accomplish repairs in Astoria, Oregon in accordance with Labor Union Contracts and agreements.

Two (2) men @ 8 hours @$35.00	$560.00
Four (4) men @220 miles @.35	$308.00

M/V "New Marquesa"
Job #3312
Page Two

Item #4 Premium Time $3,102.00

Furnish premium time as authorized to accomplish repairs so as not to interfere with vessel's cargo commitments.

Item #5 Gas Free Certificate $ 950.00

Furnish services of Certified Chemist to check area(s) as designated and issue"Safe For Workers" and "Safe For Fire" certificates.

TOTAL AMOUNT DUE THIS INVOICE $11,950.00
==========

NORTHWEST MARINE IRON WORKS
INVOICES BY CALLEY

MONTH OF February 1988

CUSTOMER	SHIP	INVOICE NUMBER	INVOICE AMOUNT	DATE PAYMENT RECEIVED	PERCENT	AMOUNT	DATE PAID	CHECK NUMBER
Chantiers De L'Atlantique	Noordam Neiuw Amsterdam	3110-A	1,500.00	3-16-88	10%	150.00	3/21/88	220585
Special Editions	M/V Polaris	10660005	44,423.95	4-11-88	10%	4,442.40	4/15/88	220508
Maritime Overseas	Overseas Harriet	3263-A	2,980.00	3-11-88	10%	298.00	3/21/88	220585
Gen Steamship	Pan Noble	3285	2,632.00	3-10-88	10%	263.20	3/21/88	220585
Star Shipping	Spreader Bar	3283	1,390.00	3-14-88	10%	139.00	3/21/88	220585
Yang Ming Marine Transport	Ming Spring	3282	50,400.00	3-4-88	10%	5,040.00	3/21/88	220585
Sea Hawk Mangers	Pride of Texas	3277	5,408.00	5-2-88	10%	540.80	5/13/88	220528

NWMAR128393

NORTHWEST MARINE IRON WORKS

5✓

SHIP REPAIRERS
GENERAL MACHINE WORK
ENGINEERING

MAIL PAYMENT TO:
P.O. BOX 4000-58
PORTLAND, OREGON 97208

INVOICE

Chantiers De L'Atlantique
Alshom-Atlantique
B.P. 400-44608
St. Nazaire, Cedex
FRANCE

DATE Feb. 1, 1988
OUR JOB NO 3110
CUSTOMER'S ORDER NO
CONTRACT NO
REFERENCE NO 3110-N
TERMS Net

INVOICE NUMBER 02119

Duns No. 00-902-8[illegible]

Warehouse charges for the main engine generator step-up gears, Ex-Noordam and Nieuw Amsterdam.

Charges for the month of February, 1988.

TOTAL AMOUNT DUE THIS INVOICE: $1,500.00

$ Partial Calley Net

PAST DUE PAYMENTS SHALL BEAR INTEREST AT THE HIGHEST LAWFUL RATE UNTIL REPAID, NOT TO EXCEED 1½% PER MONTH.

CORRESPONDENCE ADDRESS P.O. BOX 3109 PORTLAND, OREGON 97208 PHONE (503) 285-7557

NWMAR128394

NORTHWEST MARINE IRON WORKS

SHIP REPAIRERS
GENERAL MACHINE WORK
ENGINEERING

MAIL PAYMENT TO:
P.O. BOX 4000-58
PORTLAND, OREGON 97208

INVOICE

M/V "Polaris" and Owners
c/o Special Expeditions
720 Fifth Avenue
New York, New York 10019

Attention: Mr. Nielson

CUSTOMER CODE NUMBER: 27960

DATE: Feb. 3, 1988
OUR JOB NO.: 1066-0005
CUSTOMER'S ORDER NO.:
CONTRACT NO.:
INVOICE NO.: 1066-0005
TERMS: Net upon receipt of invoice

Duns No. 00-902-8580

M/V "Polaris"

1. Furnish transportation, living expenses and subsistence for qualified Anschutz Gyrocompass Technicians to attend the M/V "Polaris" in order to accomplish repairs as directed by the Owner's Representative.

$ 2,636.26

2. Furnish service or Qualified Anschutz Gyrocompass Technicians to attend vessel and perform repairs to the Anschutz Gyrocompass and radar assemblies under direction of Owner's Representative.

After one day at sea sat Nav. began to blow fuses. Captain requested to check unit. No repair manuals on board. Found shorted power supply also shorted CRT unit. Without manual could not tell how extensive the damage or short was. Order new power board and CRT unit. Also order new Magnavox 5102, in case unit could not be fixed. Ship was arriving the 24 at 0800 hours and ETA at 1200 Hours. Flight arriving from LAX was approximately 1230 hours, parts had to come in day before in order to have them by 0800 hours next day. Upon arrival of parts and trying to install new assemblies on the SAL Jug 4000 was notified by Master, that no more cabins were available. Had to leave the vessel and they will do the installation. Repacked SAL Jug to be repaired in shop back in Los Angeles. Had no time to fill our reports of any type in that amount of time. Had to pack and pick up tools in 30 minutes.

Furruno radar and K.L. 10 cm Radar. New radar installed in Ensenada did not work, display in K.H. Radar showing like water in wave guide. Rechecked all connections to antenna scanner assembly for possible miss connection or wrong connection. All OK problem in receiver module, rechecked all voltages in display

NORTHWEST MARINE IRON WORKS

SHIP REPAIRERS
GENERAL MACHINE WORK
ENGINEERING

MAIL PAYMENT TO:
P.O. BOX 4000-58
PORTLAND, OREGON 97208

INVOICE

M/V "Polaris" and Owners
c/o Special Expeditions
720 Fifth Avenue
New York, New York 10019

Attention: Mr. Nielson

CUSTOMER CODE NUMBER: 27960

DATE	Feb. 3, 1988
OUR JOB NO.	1066-0005
CUSTOMER'S ORDER NO.	
CONTRACT NO.	
INVOICE NO.	1066-0005
TERMS	Net upon receipt of invoice

Duns No. 00-902-8580

unit, all OK. In the Kelvin Hughes had crews disassemble wave guide connection, found bad packing and traces of water, but not to affect performance of radar. Removed the 12 feet 10cm scanner antenna, found bad bearings and possible bad rotary joint. Crystal Diodes needed in order to check for performance of other parts. Removed bottom plate where all connection come in and out and found salt water in it. Radar began to tune but no Diodes.

$ 8,728.50

Furnish the following material/equipment to vessel:

1 ea. Anschutz Std-4 Gyrospere S/N 27566 (No exchange unit cracked).

1 ea. #139-32 Amplifier Unit.

1 ea. Complete gearing assembly for Std-4 VT with latitude and speed corrector. Exchange.

1 ea. Magnavox 5102 with speed and gyro interface.

1 ea. Stack switch for steering 10 stack 3 pos.

1 lot Packing, handling and special delivery.

$33,059.19

Final Collect net upon receipt

TOTAL AMOUNT DUE THIS INVOICE: $44,423.95

PAST DUE PAYMENTS SHALL BEAR INTEREST AT THE HIGHEST LAWFUL RATE UNTIL REPAID. NOT TO EXCEED 1½% PER MONTH.

CORRESPONDENCE ADDRESS P.O. BOX 3109 PORTLAND, OREGON 97208 PHONE (503) 285-7557

9

NORTHWEST MARINE IRON WORKS

SHIP REPAIRERS
GENERAL MACHINE WORK
ENGINEERING

MAIL PAYMENT TO:
P.O. BOX 4000-58
PORTLAND, OREGON 97208

INVOICE

M/V Overseas Harriet and Owners
c/o Maritime Overseas Corporation
43 West 42nd Street
New York, NY 10036

DATE Feb. 4, 1988
OUR JOB NO. 3263
CUSTOMER'S ORDER NO.
CONTRACT NO.
INVOICE NO. 3263-A
TERMS Net

CUSTOMER CODE NUMBER: 11720

Duns No. 00-902-8580

M/V OVERSEAS HARRIET

CORRECTED

To accomplish repairs and betterments to the subject vessel.

TOTAL AMOUNT DUE THIS INVOICE:	$10,461.00
Less Invoice 3263	(7,481.00)
Amount Due:	2,980.00

Final Calley Net

PAST DUE PAYMENTS SHALL BEAR INTEREST AT THE HIGHEST LAWFUL RATE UNTIL REPAID, NOT TO EXCEED 1½% PER MONTH.

CORRESPONDENCE ADDRESS P.O. BOX 3109 PORTLAND, OREGON 97208 PHONE (503) 285-7557

NWMAR128397

NORTHWEST MARINE IRON WORKS

SHIP REPAIRERS
GENERAL MACHINE WORK
ENGINEERING

MAIL PAYMENT TO:
P.O. BOX 4000-58
PORTLAND, OREGON 97208

INVOICE

M/V "Pan Noble" and Owners
c/o General Steamship Corporation
421 S. W. 6th Avenue, Suite 410
Portland, OR 97204

DATE	Feb. 8, 1988
OUR JOB NO.	3285
CUSTOMER'S ORDER NO.	
CONTRACT NO.	
INVOICE NO.	3285
TERMS	Net

CUSTOMER CODE NUMBER: 06200

Duns No 00-902-8580

M/V "Pan Noble"

To accomplish repairs recently accomplished on the subject vessel, as per the attached specifications numbers 1 and 2.

TOTAL AMOUNT DUE THIS INVOICE: $2,632.00

Final Calling Net

PAST DUE PAYMENTS SHALL BEAR INTEREST AT THE HIGHEST LAWFUL RATE UNTIL REPAID, NOT TO EXCEED 1½% PER MONTH.

CORRESPONDENCE ADDRESS P.O. BOX 3109 PORTLAND, OREGON 97208 PHONE (503) 285-7557

NWMAR128398

NORTHWEST MARINE IRON WORKS

SHIP REPAIRERS
GENERAL MACHINE WORK
ENGINEERING

MAIL PAYMENT TO:
P.O. BOX 4000-58
PORTLAND, OREGON 97208

INVOICE

Star Shipping Company
Oregon Pioneer Building
Portland, OR 97204

DATE Feb. 9, 1988
OUR JOB NO 3283
CUSTOMER'S ORDER NO
CONTRACT NO.
INVOICE NO. 3283
TERMS Net

CUSTOMER CODE NUMBER: 28470

Duns No 00-902-8580

To cover the cost of testing one (1) lumber lifting spreader bar on February 3, 1988.

TOTAL AMOUNT DUE THIS INVOICE: $1,390.00

Final Calley Nut

PAST DUE PAYMENTS SHALL BEAR INTEREST AT THE HIGHEST LAWFUL RATE UNTIL REPAID, NOT TO EXCEED 1½% PER MONTH.

CORRESPONDENCE ADDRESS P.O. BOX 3109 PORTLAND, OREGON 97208 PHONE (503) 285-7557

NWMAR128399

31

NORTHWEST MARINE IRON WORKS

SHIP REPAIRERS
GENERAL MACHINE WORK
ENGINEERING

MAIL PAYMENT TO:
P.O. BOX 4000-58
PORTLAND, OREGON 97208

INVOICE

M/V Ming Spring & Owners
Yang Ming Marine Transport Lines
c/o Solar International Shipping Agency, Inc.
2 World Trade Building, Suite 2264
New York, NY 10048

Attention: Mr. W. C. Chen

CUSTOMER CODE NUMBER: 01948

DATE: Feb 11, 1988
OUR JOB NO.: 3282
CUSTOMER'S ORDER NO.:
CONTRACT NO.:
INVOICE NO.: 3282
TERMS: Net upon receipt of invoice

Duns No. 00-902-8580

M/V MING SPRING

To cover the cost of repairs accomplished on the subject vessel, as per attached specifications Nos. 1 and 2.

TOTAL AMOUNT DUE THIS INVOICE: 50,400.00

Final Calling net ~~30~~ upon receipt

PAST DUE PAYMENTS SHALL BEAR INTEREST AT THE HIGHEST LAWFUL RATE UNTIL REPAID, NOT TO EXCEED 1½% PER MONTH.

CORRESPONDENCE ADDRESS P.O. BOX 3109 PORTLAND, OREGON 97208 PHONE (503) 285-7557

NWMAR128400

NORTHWEST MARINE IRON WORKS

32

SHIP REPAIRERS
GENERAL MACHINE WORK
ENGINEERING

MAIL PAYMENT TO:
P.O. BOX 4000-58
PORTLAND, OREGON 97208

INVOICE

M/V Pride of Texas and Owners
c/o Sea Hawk Managers
111 Sannin St., Suite 1060
Houston, Texas 77002

Attention: Mike Miller

CUSTOMER CODE NUMBER: 26118

DATE: Feb. 9, 1988
OUR JOB NO.: 3277
CUSTOMER'S ORDER NO.:
CONTRACT NO.:
INVOICE NO.: 3277
TERMS: Net upon receipt of invoice

Duns No. 00-902-8580

M/V PRIDE OF TEXAS

To cover the cost of repairs accomplished on the subject vessel, as per attached specifications Nos.1 through 7.

TOTAL AMOUNT DUE THIS INVOICE: $5,408.00

Final Calley net upon receipt

PAST DUE PAYMENTS SHALL BEAR INTEREST AT THE HIGHEST LAWFUL RATE UNTIL REPAID, NOT TO EXCEED 1½% PER MONTH.

CORRESPONDENCE ADDRESS P.O. BOX 3109 PORTLAND, OREGON 97208 PHONE (503) 285-7557

NWMAR128401

NORTHWEST MARINE IRON WORKS
INVOICES BY CALLEY

MONTH OF January 1988

CUSTOMER	SHIP	INVOICE NUMBER	INVOICE AMOUNT	DATE PAYMENT RECEIVED	PERCENT	AMOUNT	DATE PAID	CHECK NUMBER
Montgomery Elevator	Sagafjord	3224-SUP	3,213.00	2-5-88	5%	160.65	2-10-88	220612
Chantiers De L'Atlantique	Nieuw Amsterdam	3110-M	1,500.00	3-16-88	10%	150.00	3/21/88	220585
Cunard Line	Sagafjord	3224-B	258,783.52	2-8-88	5%	12,939.00	2-08-88	220610 ★ 88
International Shipping	Hakufu	3269	4,873.00	2-29-88	10%	487.30	3-04-88	220572
Nedlloyd	Amelia	3267	4,806.00	2-11-88	10%	480.60	3-04-88	220572
Maritime Overseas Corp	Overseas Harriet	3263	7,481.00	3-11-88	10%	748.10	3-21-88	220585
General Steamship	Hillesport Darling	3268	528.00	2-8-88	10%	52.80	2-10-88	220612
Cunard Line	Sagafjord	3224-C	1,151,110.88	* CANCELED REVISED	DNV	3224-E ←		→
Adrick Cooling	Sagafjord	3247-A	39,188.00	Canceled	3	247-B ←		→
Gen Steamship	M/V Ermis	3272	9,535.00	2-8-88	10%	953.50	2-10-88	220612
Point Hope Shipyard	Sagafjord	3224-D	6,527.00	canceled	32	24-E1 ←		→
Cunard Line	Sagafjord	3224-E	878,724.88	1-28-88	5% +60,000	5,000.00 55,888.00 43,936.00	12-16-87 2-08-88	214561 ✓ 220610 ★ 88
Cunard Line	Vistafjord	3271	25,000.00	3-8-88	10%	2,500.00	3/21/88	220585
Cunard Line	Sagafjord	3224-CM	(1,151,110.88)	cancel	32	24-C 1/88 ←		→
Adrick Cooling	Sagafjord	3247-CM	(43,154.00)	cancel	32	47 12/87 ←		→
Adrick Cooling	Sagafjord	3247-B	(39,188.00)	cancel	32	47-A 1/88 ←		→
Arick Cooling	Sagafjord	3247-C	37,612.00	3/28/88	10%	3,761.20		
Point Hope Shipyd	Sagafjord	3224-E1	(6,527.00)	cancel	322	4-D ←		→
Point Hope Shipyd	Sagafjord	3256	1,512.00	2-19-88	10%	151.20	3-04-88	220574

NWMAR128402

NORTHWEST MARINE IRON WORKS

SHIP REPAIRERS
GENERAL MACHINE WORK
ENGINEERING

MAIL PAYMENT TO:
P.O. BOX 4000-58
PORTLAND, OREGON 97208

INVOICE

Montgomery Elevator Company
4265 S. E. Interstate Highway
Milwaukie, Oregon 97222

Attention: Mr. Roger Ziemer, Service Manager

CUSTOMER CODE NUMBER: 13585

DATE: January 4, 1988
OUR JOB NO.: 3224 (Supplement)
CUSTOMER'S ORDER NO.:
CONTRACT NO.:
INVOICE NO.: 3224 (Supplement)
TERMS:

Duns No. 00-902-8580

M/V "SAGAFJORD"

For labor, material and shop work to assist sub-contractor's personnel, while accomplishing elevator repairs aboard the M/V "SAGAFJORD":

TOTAL AMOUNT DUE THIS INVOICE: **$3,213.00**

PARTIAL
CALLEY
NET

PAST DUE PAYMENTS SHALL BEAR INTEREST AT THE HIGHEST LAWFUL RATE UNTIL REPAID, NOT TO EXCEED 1½% PER MONTH.

CORRESPONDENCE ADDRESS, P.O. BOX 3109, PORTLAND, OREGON 97208, PHONE (503) 285-7557

NWMAR128403

NORTHWEST MARINE IRON WORKS

SHIP REPAIRERS
GENERAL MACHINE WORK
ENGINEERING

MAIL PAYMENT TO:
P.O. BOX 4000-58
PORTLAND, OREGON 97208

INVOICE

DATE	January 5, 1988
OUR JOB NO.	3110
CUSTOMER'S ORDER NO.	
CONTRACT NO.	
INVOICE NO.	3110-M
TERMS	NET

CHANTIERS DE L'ATLANTIQUE
Alshom-Atlantique
B. P. 400-44608
St. Nazaire, Cedex
FRANCE

CUSTOMER CODE NUMBER: 02119

Duns No. 00-902-8580

Warehouse charges for the main engine generator step-up gears, Ex-Noordam and Nieuw Amsterdam.

Charges for the month of January, 1988.

TOTAL AMOUNT DUE THIS INVOICE: $1,500.00

PARTIAL
CALLEY
NET

PAST DUE PAYMENTS SHALL BEAR INTEREST AT THE HIGHEST LAWFUL RATE UNTIL REPAID, NOT TO EXCEED 1½% PER MONTH.

CORRESPONDENCE ADDRESS P.O. BOX 3109 PORTLAND, OREGON 97208 PHONE (503) 285-7557

NWMAR128404

NORTHWEST MARINE IRON WORKS

SHIP REPAIRERS
GENERAL MACHINE WORK
ENGINEERING

MAIL PAYMENT TO:
P.O. BOX 4000-58
PORTLAND, OREGON 97208

INVOICE

C/V "Sagafjord" & Owners
Cunard Line, Ltd.
555 5th Avenue
New York, N Y 10017
Attn: Mr. K. Norvik, Vice President
Technical Operations/NAC

CUSTOMER CODE NUMBER: 002889

DATE January 4, 1987
OUR JOB NO. 3224
CUSTOMER'S ORDER NO. Verbal
CONTRACT NO.
INVOICE NO. 3224-B
TERMS Net

Duns No. 00-902-8580

C/V SAGAFJORD
PARITIAL BILLING

To accomplish repairs to the Garden Lounge Veranda Deck
Forward per attached specification.

TOTAL AMOUNT DUE THIS INVOICE: $258,783.52

PARTIAL
CALLEY
NET

PAST DUE PAYMENTS SHALL BEAR INTEREST AT THE HIGHEST LAWFUL RATE UNTIL REPAID, NOT TO EXCEED 1½% PER MONTH.

CORRESPONDENCE ADDRESS P.O. BOX 3109 PORTLAND, OREGON 97208 PHONE (503) 285-7557

NWMAR128405

NORTHWEST MARINE IRON WORKS

SHIP REPAIRERS
GENERAL MACHINE WORK
ENGINEERING

MAIL PAYMENT TO:
P.O. BOX 4000-58
PORTLAND, OREGON 97208

INVOICE

M/V Hakufu and Owners
c/o International Shipping
Common Wealth Building
421 S. W. 6th Avenue
Portland, OR 97205

DATE January 6, 1988
OUR JOB NO. 3269
CUSTOMER'S ORDER NO.
CONTRACT NO.
INVOICE NO. 3269
TERMS NET

CUSTOMER CODE NUMBER: 08520

Duns No. 00-902-8580

M/V HAKUFU

To accomplish repairs and betterments to the subject vessel, as per attached specifications No. 1 through No. 5.

FINAL CALLEY NET

TOTAL AMOUNT DUE THIS INVOICE: $4,873.00

PAST DUE PAYMENTS SHALL BEAR INTEREST AT THE HIGHEST LAWFUL RATE UNTIL REPAID, NOT TO EXCEED 1½% PER MONTH.

CORRESPONDENCE ADDRESS, P.O. BOX 3109, PORTLAND, OREGON 97208, PHONE (503) 285-7557

NWMAR128406

5 ✓

NORTHWEST MARINE IRON WORKS

SHIP REPAIRERS
GENERAL MACHINE WORK
ENGINEERING

MAIL PAYMENT TO:
P.O. BOX 4000-58
PORTLAND, OREGON 97208

INVOICE

M/V "Amelia" and Owners
c/o Nedlloyd
200 S. W. Market St., Suite 1010
Portland, Oregon 97201

DATE January 6, 1988
OUR JOB NO. 3267
CUSTOMER'S ORDER NO.
CONTRACT NO.
INVOICE NO. 3267
TERMS NET

CUSTOMER CODE NUMBER: 14200

Duns No. 00-902-8580

M/V AMELIA

To accomplish repairs and betterments to the subject vessel, as per attached specification No. 1.

TOTAL AMOUNT DUE THIS INVOICE: $4,806.00

FINAL CALLEY NET

PAST DUE PAYMENTS SHALL BEAR INTEREST AT THE HIGHEST LAWFUL RATE UNTIL REPAID, NOT TO EXCEED 1½% PER MONTH

CORRESPONDENCE ADDRESS P.O. BOX 3109 PORTLAND, OREGON 97208 PHONE (503) 285-7557

NWMAR128407

NORTHWEST MARINE IRON WORKS

SHIP REPAIRERS
GENERAL MACHINE WORK
ENGINEERING

MAIL PAYMENT TO:
P.O. BOX 4000-58
PORTLAND, OREGON 97208

INVOICE

M/V Overseas Harriet and Owners
c/o Maritime Overseas Corporation
43 West 42nd Street
New York, NY 10036

DATE January 8, 1988
OUR JOB NO. 3263
CUSTOMER'S ORDER NO.
CONTRACT NO.
INVOICE NO. 3263
TERMS NET

CUSTOMER CODE NUMBER: 11720

Duns No. 00-902-8580

M/V OVERSEAS HARRIET

To accomplish repairs and betterments to the subject vessel, as per attached specifications No. 1 through No. 3.

TOTAL AMOUNT DUE THIS INVOICE: $7,481.00

FINAL CALLEY NET

PAST DUE PAYMENTS SHALL BEAR INTEREST AT THE HIGHEST LAWFUL RATE UNTIL REPAID, NOT TO EXCEED 1½% PER MONTH.

CORRESPONDENCE ADDRESS P.O. BOX 3109 PORTLAND, OREGON 97208 PHONE (503) 285-7557

NWMAR128408

NORTHWEST MARINE IRON WORKS

SHIP REPAIRERS
GENERAL MACHINE WORK
ENGINEERING

MAIL PAYMENT TO:
P.O. BOX 4000-58
PORTLAND, OREGON 97208

INVOICE

M/V "Hellespont Daring" and Owners
c/o General Steamship Corporation
421 S. W. 6th Avenue, Suite 410
Portland, OR 97204

DATE January 8, 1988
OUR JOB NO. 3268
CUSTOMER'S ORDER NO.
CONTRACT NO.
INVOICE NO. 3268
TERMS NET

CUSTOMER CODE NUMBER: 06200

Duns No. 00-902-8580

M/V HELLESPONT DARING

To accomplish repairs and betterments to the subject vessel, as per attached specification No. 1.

TOTAL AMOUNT DUE THIS INVOICE: $528.00

Final Calley Net

PAST DUE PAYMENTS SHALL BEAR INTEREST AT THE HIGHEST LAWFUL RATE UNTIL REPAID, NOT TO EXCEED 1½% PER MONTH

CORRESPONDENCE ADDRESS P.O. BOX 3109 PORTLAND, OREGON 97208 PHONE (503) 285-7557

NWMAR128409

NORTHWEST MARINE IRON WORKS

11 V

SHIP REPAIRERS
GENERAL MACHINE WORK
ENGINEERING

MAIL PAYMENT TO:
P.O. BOX 4000-58
PORTLAND, OREGON 97208

INVOICE

C/V "Sagafjord" and Owners
Cunard Line Limited
555 5th Avenue
New York, New York 10017

Attention: Mr. K. Norvik

DATE January 11, 1988
OUR JOB NO. 3224
CUSTOMER'S ORDER NO.
CONTRACT NO.
INVOICE NO. 3224-C
TERMS NET

CUSTOMER CODE NUMBER: 02889

Duns No. 00-902-8580

C/V "SAGAFJORD"

Adjusted Contract Price:	$1,958,324.00
Additional Work:	1,016,640.00
	$2,974,964.00
Additional cost incurred in performance of Contract Work Items arising from impact of emergent work put in hand during availability period of vessel.	117,505.00
Shipcheck Costs (Labor/Expenses)	79,917.00
TOTAL FOR JOB:	$3,172,386.00
LESS: Previous Billing (90% of Contract)	(1,762,491.60)
LESS: Partial Billing - Garden Lounge	(258,783.52)
TOTAL AMOUNT DUE:	$1,151,110.88

Final Calley Net

PAST DUE PAYMENTS SHALL BEAR INTEREST AT THE HIGHEST LAWFUL RATE UNTIL REPAID, NOT TO EXCEED 1½% PER MONTH

CORRESPONDENCE ADDRESS P.O. BOX 3109 PORTLAND, OREGON 97208 PHONE (503) 285-7557

NWMAR128410

NORTHWEST MARINE IRON WORKS

14

SHIP REPAIRERS
GENERAL MACHINE WORK
ENGINEERING

MAIL PAYMENT TO:
P.O. BOX 4000-58
PORTLAND, OREGON 97208

INVOICE

Adrick Cooling Corporation
320 Cantor Avenue
Linden, New Jersey 07036

DATE: Jan. 13, 1987
OUR JOB NO.: 3247
CUSTOMER'S ORDER NO.: Verbal
CONTRACT NO.:
INVOICE NO.: 3247-A
TERMS: Net 30 Days

CUSTOMER CODE NUMBER: 00080

Duns No. 00-902-8580

M/V "SAGAFJORD"

For providing labor, materials, and equipment toa ccomplish repairs aboard the vessel as listed herein:

Item No. 2028	Fan Room No. 1 Upper	$ 4,669.00
2028A	Top Plate	1,968.00
2029	Fan Room No. 2	4,744.00
2031	Fan Room No. 3 Lower	1,314.00
2031A	(A) 6" x 16' Long Ducts	6,304.00
2031B	(A) Balance 498.00 Repairs	1,495.00
2031B	(B) (2) Add Ducts to Relocate Fan	1,660.00
2033		Cancelled
2036	Fan room No. 8	8,089.00
2037	Transition Piece	1,434.00
2040	Fan Room No. 20	9,661.00
2041	Fan Room No. 15	1,816.00
	SUBTOTAL:	$43,154.00
Item No. 2028	Fan Room No. 1 Upper	(3,089.00)
2028A	Top Plate	(528.00)
2031	Fan Room No. 3 Lower	(349.00)
	TOTAL CREDIT:	(3,926.00)
	TOTAL AMOUNT DUE THIS INVOICE:	~~$39,228.00~~ 39188.00

Final Calling Net 30

OK
JO

PAST DUE PAYMENTS SHALL BEAR INTEREST AT THE HIGHEST LAWFUL RATE UNTIL REPAID, NOT TO EXCEED 1½% PER MONTH.

CORRESPONDENCE ADDRESS: P.O. BOX 3100, PORTLAND, OREGON

NWMAR128411

NORTHWEST MARINE IRON WORKS

15 ✓

SHIP REPAIRERS
GENERAL MACHINE WORK
ENGINEERING

MAIL PAYMENT TO:
P.O. BOX 4000-58
PORTLAND, OREGON 97208

INVOICE

M/V "Ermis" and Owners
c/o General Steamship Corp.
421 S. W 6th Avenue, Suite 410
Portland, OR 97204

DATE January 12, 1988
OUR JOB NO. 3272
CUSTOMER'S ORDER NO.
CONTRACT NO.
INVOICE NO. 3272
TERMS NET

CUSTOMER CODE NUMBER: 06200

Duns No. 00-902-8580

M/V "ERMIS"

To accomplish repairs and betterments to the subject vessel, as per attached Specification No. 1 and No. 2.

TOTAL AMOUNT DUE THIS INVOICE: $9,535.00

Final Calley Net

PAST DUE PAYMENTS SHALL BEAR INTEREST AT THE HIGHEST LAWFUL RATE UNTIL REPAID, NOT TO EXCEED 1½% PER MONTH.

CORRESPONDENCE ADDRESS P.O. BOX 3109 PORTLAND, OREGON 97208 PHONE (503) 285-7557

NWMAR128412

NORTHWEST MARINE IRON WORKS

SHIP REPAIRERS
GENERAL MACHINE WORK
ENGINEERING

MAIL PAYMENT TO:
P.O. BOX 4000-58
PORTLAND, OREGON 97208

INVOICE

Point Hope Shipyard Co., Ltd.
345 Harbor Road
Victoria, B.C., V9A 3S2

Attention: Mr. Larry Smith

DATE: Jan. 15, 1988
OUR JOB NO.: 3224
CUSTOMER'S ORDER NO.:
CONTRACT NO.:
INVOICE NO.: 3224-D
TERMS: Net

CUSTOMER CODE NUMBER: 021230

Duns No. 00-902-8580

C/V "SAGAFJORD"

Furnish labor, material and equipment to assist Owner's subcontractor during Repairs/Renewals to wood decking.

Labor:		$5,935.00
Material:		592.00
TOTAL AMOUNT DUE THIS INVOICE:	US	$6,527.00

Final Calley Net

PAST DUE PAYMENTS SHALL BEAR INTEREST AT THE HIGHEST LAWFUL RATE UNTIL REPAID, NOT TO EXCEED 1½% PER MONTH

CORRESPONDENCE ADDRESS P.O. BOX 3109 PORTLAND, OREGON 97208 PHONE (503) 285-7557

NWMAR128413

27

NORTHWEST MARINE IRON WORKS

SHIP REPAIRERS
GENERAL MACHINE WORK
ENGINEERING

MAIL PAYMENT TO:
P.O. BOX 4000-58
PORTLAND, OREGON 97208

INVOICE

C/V "Sagafjord" and Owners
Cunard Line Limited
555 5th Avenue
New York, NY 10017

DATE January 20, 1988
OUR JOB NO. 3224
CUSTOMER'S ORDER NO.
CONTRACT NO.
INVOICE NO. 3224-D
TERMS NET

CUSTOMER CODE NUMBER: 02889

Duns No 00-902-8580

C/V "SAGAFJORD"
(REVISED)

Adjusted Contract Price:	$1,958,324.00
Additional Work:	941,676.00
TOTAL FOR JOB:	$2,900,000.00
LESS: Previous Billing (90% of Contract)	(1,762,491.60)
LESS: Partial Billing - Garden Lounge - Previously Billed	(258,783.52)
TOTAL AMOUNT DUE:	$ 878,724.88

Partial Calley Net

PAST DUE PAYMENTS SHALL BEAR INTEREST AT THE HIGHEST LAWFUL RATE UNTIL REPAID, NOT TO EXCEED 1½% PER MONTH.

CORRESPONDENCE ADDRESS, P.O. BOX 3109, PORTLAND, OREGON 97208, PHONE (503) 285-7557

NWMAR128414

28.

NORTHWEST MARINE IRON WORKS

SHIP REPAIRERS
GENERAL MACHINE WORK
ENGINEERING

MAIL PAYMENT TO:
P.O. BOX 4000-58
PORTLAND, OREGON 97208

INVOICE

C/V Vistafjord and Owners
Cunard Lines LTD
555 Fifth Avenue
New York, New York 10017

Attention: Mr. K. Norvik

DATE Jan. 21, 1988
OUR JOB NO. 3271
CUSTOMER'S ORDER NO.
CONTRACT NO.
INVOICE NO. 3271
TERMS Net

CUSTOMER CODE NUMBER: 002889

Duns No. 00-902-8580

C/V VISTAFJORD

Negotiated price for work accomplished on the subject vessel.

PRICE NEGOTIATED: $25,000.00

Partial Calling Net

PAST DUE PAYMENTS SHALL BEAR INTEREST AT THE HIGHEST LAWFUL RATE UNTIL REPAID, NOT TO EXCEED 1½% PER MONTH.

CORRESPONDENCE ADDRESS P.O. BOX 3109 PORTLAND, OREGON 97208 PHONE (503) 285-7557

NWMAR128415

31

NORTHWEST MARINE IRON WORKS

SHIP REPAIRERS
GENERAL MACHINE WORK
ENGINEERING

MAIL PAYMENT TO:
P.O. BOX 4000-58
PORTLAND, OREGON 97208

INVOICE

C/V "Sagafjord" and Owners
Cunard Line Limited
555 Fifth Avenue
New York, New York 10017

DATE January 22, 1988
OUR JOB NO. 3224
CUSTOMER'S ORDER NO.
CONTRACT NO.
INVOICE NO. 3224-CM
TERMS CREDIT

CUSTOMER CODE NUMBER: 02889

Duns No. 00-902-8580

C/C SAGAFJORD

BOOK PURPOSE ONLY

TOTAL CREDIT DUE THIS INVOICE: ⟨$1,151,110.88⟩

Final Calley Credit

PAST DUE PAYMENTS SHALL BEAR INTEREST AT THE HIGHEST LAWFUL RATE UNTIL REPAID, NOT TO EXCEED 1½% PER MONTH.

CORRESPONDENCE ADDRESS P.O. BOX 3109 PORTLAND, OREGON 97208 PHONE (503) 285-7557

NWMAR128416

30

NORTHWEST MARINE IRON WORKS

SHIP REPAIRERS
GENERAL MACHINE WORK
ENGINEERING

MAIL PAYMENT TO:
P.O. BOX 4000-58
PORTLAND, OREGON 97208

INVOICE

Adrick Cooling Corporation
320 Cantor Avenue
Linden, New Jersey 07036

DATE January 22, 1988
OUR JOB NO. 3247
CUSTOMER'S ORDER NO.
CONTRACT NO.
INVOICE NO. 3247-CM
TERMS CREDIT

CUSTOMER CODE NUMBER: 00080

Duns No. 00-902-8580

M/V "SAGAFJORD"

BOOK PURPOSE ONLY

TOTAL CREDIT DUE THIS INVOICE: ⟨$43,154.00⟩

Final Called Credit

PAST DUE PAYMENTS SHALL BEAR INTEREST AT THE HIGHEST LAWFUL RATE UNTIL REPAID, NOT TO EXCEED 1½% PER MONTH.

NORTHWEST MARINE IRON WORKS

39

SHIP REPAIRERS
GENERAL MACHINE WORK
ENGINEERING

MAIL PAYMENT TO:
P.O. BOX 4000-58
PORTLAND, OREGON 97208

INVOICE

Adrick Cooling Corporation
320 Cantor Avenue
Linden, New Jersey 07036

DATE Jan. 27, 1987
OUR JOB NO. 3247
CUSTOMER'S ORDER NO. Verbal
CONTRACT NO.
INVOICE NO. 3247-B
TERMS Net 30 Days

CUSTOMER CODE NUMBER:
00080

Duns No. 00-902-8580

M/V "SAGAFJORD"

CREDIT MEMO

To credit our Invoice No. 3247-A dated January 13, 1988 in its entirety.

TOTAL CREDIT DUE: ~~($39,228.00)~~ (39,188.00)

NOTE: See Rebilling Invoice No. 3247-C dated January 27, 1988.

Final Galley Credit

PAST DUE PAYMENTS SHALL BEAR INTEREST AT THE HIGHEST LAWFUL RATE UNTIL REPAID, NOT TO EXCEED 1½% PER MONTH.

CORRESPONDENCE ADDRESS P.O. BOX 3109 PORTLAND, OREGON 97208 PHONE (503) 285-7557

NWMAR128418

NORTHWEST MARINE IRON WORKS

40 ✓

SHIP REPAIRERS
GENERAL MACHINE-WORK
ENGINEERING

MAIL PAYMENT TO:
P.O. BOX 4000-58
PORTLAND, OREGON 97208

INVOICE

Adrick Cooling Corporation
320 Cantor Avenue
Linden, New Jersey 07036

DATE: Jan. 27, 1987
OUR JOB NO.: 3247
CUSTOMER'S ORDER NO.: Verbal
CONTRACT NO.:
INVOICE NO.: 3247-C
TERMS: Net

CUSTOMER CODE NUMBER: 00080

Duns No. 00-902-8580

M/V "SAGAFJORD"

For providing labor, materials, and equipment to accomplish repairs aboard the vessel as listed herein:

Item No. 2028	Fan Room No. 1 Upper	$ 4,669.00
2028A	Top Plate	1,968.00
2029	Fan Room No. 2	4,744.00
2031	Fan Room No. 3 Lower	1,314.00
2031A	(A) 6" x 16' Long Ducts	6,304.00
2031B	(A) Balance 498.00 Repairs	1,495.00
2031B	(B) (2) Add Ducts to Relocate Fan	1,660.00
2033		Cancelled
2036	Fan room No. 8	8,089.00
2037	Transition Piece	1,434.00
2040	Fan Room No. 20	9,661.00
2041	Fan Room No. 15	1,816.00
	SUBTOTAL:	$43,154.00
Item No. 2028	Fan Room No. 1 Upper	(3,089.00)
2028A	Top Plate	(528.00)
2031	Fan Room No. 3 Lower	(349.00)
2031A	6" x 16' Long Ducts	(1,576.00)
	TOTAL CREDIT:	(5,542.00)
	TOTAL AMOUNT DUE THIS INVOICE:	$37,612.00

Final Calley Net

PAST DUE PAYMENTS SHALL BEAR INTEREST AT THE HIGHEST LAWFUL RATE UNTIL REPAID, NOT TO EXCEED 1½% PER MONTH.

CORRESPONDENCE ADDRESS P.O. BOX 3109 PORTLAND, OREGON 97208 PHONE (503) 285-7557

NWMAR128419

NORTHWEST MARINE IRON WORKS

13

SHIP REPAIRERS
GENERAL MACHINE WORK
ENGINEERING

MAIL PAYMENT TO:
P.O. BOX 4000-58
PORTLAND, OREGON 97208

INVOICE

Point Hope Shipyard Co., Ltd.
345 Harbor Road
Victoria, B.C. V9A 3S2

Attention: Mr. Larry Smith

DATE Jan. 28, 1988
OUR JOB NO. 3224
CUSTOMER'S ORDER NO.
CONTRACT NO.
INVOICE NO. 3224-E
TERMS Credit

CUSTOMER CODE NUMBER: 21230

Duns No. 00-902-8580

C/V "SAGAFJORD"

CREDIT MEMO

BOOK PURPOSE ONLY

To credit Invoice No. 3224-D in its entirety.

TOTAL CREDIT AMOUNT DUE: < $6,527.00 >

See Invoice No. 3256 for rebilling.

Final Culley & Credit

PAST DUE PAYMENTS SHALL BEAR INTEREST AT THE HIGHEST LAWFUL RATE UNTIL REPAID, NOT TO EXCEED 1½% PER MONTH.

CORRESPONDENCE ADDRESS P.O. BOX 3109 PORTLAND, OREGON 97208 PHONE (503) 285-7557

NWMAR128420

NORTHWEST MARINE IRON WORKS

SHIP REPAIRERS
GENERAL MACHINE WORK
ENGINEERING

MAIL PAYMENT TO:
P.O. BOX 4000-58
PORTLAND, OREGON 97208

INVOICE

Point Hope Shipyard Co., Ltd.
345 Harbor Road
Victoria, B.C. V9A 3S2

Attention: Mr. Larry Smith

DATE Jan. 28, 1988
OUR JOB NO. 3256
CUSTOMER'S ORDER NO.
CONTRACT NO.
INVOICE NO. 3256
TERMS Net on receipt of invoice

CUSTOMER CODE NUMBER: 21230

Duns No. 00-902-8580

C/V "SAGAFJORD"

Provide labor, material, and transportation to assist Point Hope Shipyard in the procurement and delivery of materials as directed by Mr. Larry Smith.

TOTAL AMOUNT DUE THIS INVOICE: $1,512.00

Final Calley net upon receipt

PAST DUE PAYMENTS SHALL BEAR INTEREST AT THE HIGHEST LAWFUL RATE UNTIL REPAID, NOT TO EXCEED 1½% PER MONTH.

CORRESPONDENCE ADDRESS P.O. BOX 3109 PORTLAND, OREGON 97208 PHONE (503) 285-7557

NWMAR128421

NORTHWEST MARINE IRON WORKS
INVOICES BY CALLEY

MONTH OF Dec 1989

CUSTOMER	SHIP	INVOICE DATE	INVOICE NUMBER	INVOICE AMOUNT	INVOICE PAYMENT DATE	COMMISSION PERCENT	COMMISSION AMOUNT	COMMISSION DATE PAID	COMMISSION CHECK NUMBER
BSL Cruises	Bermuda Star	11/01/89	4906-1	132,953.00	10/18/89	Bermuda Star		3/1/90	2121
Kerr Steamship	Harbour Ridge	12/01/89	4189-1	1,976.00	1/19/90	10%	197.60	2/8/90	2117
Chantiers de l'Atlantique		12/01/89	3110-36	1,500.00	1/23/90	10%	150.00	2/8/90	2117
Holland America	Nieuw Amsterdam	12/04/89	4907-2	(35,059.00)		Nieuw Amsterdam		3/16/90	2123
Holland America	Nieuw Amsterdam	12/04/89	4907-3	64,793.00		Nieuw Amsterdam		3/16/90	2123
BSL Cruises	Bermuda Star	12/04/89	4906-3	664,762.00		Bermuda Star		3/1/90	2121
Holland America	Westerdam	12/12/89	4910-1	2,056.80		Westerdam		3/16/90	2123
Sunrise Shipping	Gateway West	12/14/89	4197-1	1,175.00	1/8/90	10%	117.50	2/8/90	2117
Star Shipping	Colostine	12/14/89	4198-1	2,316.00	1/18/90	10%	231.60	2/8/90	2117
Kerr Steamship	Ocean Cosmos	12/18/89	4191-1	824.00	2/8/90	10%	82.40	2/22/90	2120
Transmarine	K Challenger	12/19/89	4199-1	1,147.00	2/28/90	10%	114.70	4/4/90	2127
Compass Marine	Maritime Assoc	12/21/89	4200-1	10,204.50	1/19/90	10%	1,020.45	2/8/90	2117
BSL Cruises	Bermuda Star	12/26/89	4906-4	1,329,524.00		Bermuda Star		3/1/90	2121
BSL Cruises	Bermuda Star	12/26/89	4906-5	2,129,487.00		Bermuda Star		3/1/90	2121

NWMAR128422

NORTHWEST MARINE IRON WORKS

SHIP REPAIRERS
GENERAL MACHINE WORK
ENGINEERING

MAIL PAYMENT TO:
P.O. BOX 4000-58
PORTLAND, OREGON 97208

INVOICE

S/S "BERMUDA STAR" and Owners
c/o B.S.L. Cruises, Inc.
11086 Teaneck Road
Teaneck, N.J. 07666

12/01/89

DATE November 1, 1989
OUR JOB NO. 4906
CUSTOMER'S ORDER NO.
CONTRACT NO.
INVOICE NO. 4906-1
TERMS Net

CUSTOMER CODE NUMBER:

Duns No. 00-902-8580

S/S "BERMUDA STAR"
PROGRESS PAYMENT 1

Progress payment in accordance with
Article VIII - Sub Paragraph 3

Total amount due this invoice $132,953.00

Invoice paid. Monies received by wire.

PAST DUE PAYMENTS SHALL BEAR INTEREST AT THE HIGHEST LAWFUL RATE UNTIL REPAID. NOT TO EXCEED 1½% PER MONTH.

CORRESPONDENCE ADDRESS P.O. BOX 3109 PORTLAND, OREGON 97208 PHONE (503) 285-7557

NWMAR128423

NORTHWEST MARINE IRON WORKS

J/O

SHIP REPAIRERS
GENERAL MACHINE WORK
ENGINEERING

MAIL PAYMENT TO:
P.O. BOX 4000-58
PORTLAND, OREGON 97208

INVOICE

M/V "HARBOUR BRIDGE" and Owners
c/o Kerr Steamship Company
One S.W. Columbia, Suite 450
Portland, OR 97208

DATE December 1, 1989
OUR JOB NO. 4189
CUSTOMER'S ORDER NO.
CONTRACT NO.
INVOICE NO. 4189-1
TERMS Net

CUSTOMER CODE NUMBER:

Duns No. 00-902-8580

M/V "HARBOUR BRIDGE"

Furnished labor, material and equipment to accomplish work in accordance with attached specifications.

Total Amount Due This Invoice $1,976.00

Final
Calley
Net

PAST DUE PAYMENTS SHALL BEAR INTEREST AT THE HIGHEST LAWFUL RATE UNTIL REPAID, NOT TO EXCEED 1½% PER MONTH.

CORRESPONDENCE ADDRESS P.O. BOX 3109 PORTLAND, OREGON 97208 PHONE (503) 285-7557

NWMAR128424

NORTHWEST MARINE IRON WORKS

SHIP REPAIRERS
GENERAL MACHINE WORK
ENGINEERING

MAIL PAYMENT TO:
P.O. BOX 4000-58
PORTLAND, OREGON 97208

INVOICE

Chantiers De L'Atlantique
Alshom-Atlantique
B.P. 400-44608
St. Nazaire, Cedex
FRANCE

DATE December 1, 1989
OUR JOB NO. 3110
CUSTOMER'S ORDER NO.
CONTRACT NO.
INVOICE NO. 3110-36
TERMS Net

CUSTOMER CODE NUMBER:

Duns No. 00-902-8580

Warehouse charges for the main engine generator step-up gears, Ex-NOORDAM and NIEUW AMSTERDAM.

Charges for the month of December, 1989

Total Amount Due This Invoice $1,500.00

Partial Collect Net

PAST DUE PAYMENTS SHALL BEAR INTEREST AT THE HIGHEST LAWFUL RATE UNTIL REPAID, NOT TO EXCEED 1½% PER MONTH.

CORRESPONDENCE ADDRESS P.O. BOX 3109 PORTLAND, OREGON 97208 PHONE (503) 285-7557

NWMAR128425

519

NORTHWEST MARINE IRON WORKS

SHIP REPAIRERS
GENERAL MACHINE WORK
ENGINEERING

MAIL PAYMENT TO:
P.O. BOX 4000-58
PORTLAND, OREGON 97208

INVOICE

M/S "NIEUW AMSTERDAM" and Owners
c/o Holland America Lines
300 Elliott Avenue West
Seattle, WA 98119

DATE December 4, 1989
OUR JOB NO. 4907
CUSTOMER'S ORDER NO.
CONTRACT NO.
INVOICE NO. 4907-2
TERMS Net

CUSTOMER CODE NUMBER:

Duns No. 00-902-8580

M/S "NIEUW AMSTERDAM"
CREDIT MEMO

To cancel invoice number 4907-1, dated November 29, 1989

Total Credit Due ($35,059.00)

Partial
Calley
Net

PAST DUE PAYMENTS SHALL BEAR INTEREST AT THE HIGHEST LAWFUL RATE UNTIL REPAID, NOT TO EXCEED 1½% PER MONTH.

CORRESPONDENCE ADDRESS P.O. BOX 3109 PORTLAND, OREGON 97208 PHONE (503) 285-7557

NWMAR128426

NORTHWEST MARINE IRON WORKS

520

SHIP REPAIRERS
GENERAL MACHINE WORK
ENGINEERING

MAIL PAYMENT TO:
P.O. BOX 4000-58
PORTLAND, OREGON 97208

INVOICE

M/S "NIEUW AMSTERDAM" and Owners
c/o Holland America Lines
300 Elliott Avenue West
Seattle, WA 98119

DATE	December 4, 1989
OUR JOB NO.	4907
CUSTOMER'S ORDER NO.	
CONTRACT NO.	
INVOICE NO.	4907-3
TERMS	Net

CUSTOMER CODE NUMBER:

Duns No. 00-902-8580

M/S "NIEUW AMSTERDAM"

Furnished labor, material and equipment to accomplish work in accordance with the attached specifications

Total Amount Due This Invoice $64,793.00

Partial
Called
Net

PAST DUE PAYMENTS SHALL BEAR INTEREST AT THE HIGHEST LAWFUL RATE UNTIL REPAID, NOT TO EXCEED 1½% PER MONTH.

CORRESPONDENCE ADDRESS P.O. BOX 3109 PORTLAND, OREGON 97208 PHONE (503) 285-7557

NWMAR128427

521

NORTHWEST MARINE IRON WORKS

SHIP REPAIRERS
GENERAL MACHINE WORK
ENGINEERING

MAIL PAYMENT TO:
P.O. BOX 4000-58
PORTLAND, OREGON 97208

INVOICE

S/S "BERMUDA STAR" and Owners
c/o B.S.L. Cruises, Inc.
11086 Teaneck Road
Teaneck, N.J.

DATE December 4, 1989
OUR JOB NO. 4906
CUSTOMER'S ORDER NO.
CONTRACT NO.
INVOICE NO. 4906-3
TERMS Net

CUSTOMER CODE NUMBER:

Duns No. 00-902-8580

S/S "BERMUDA STAR"
PROGRESS PAYMENT 3

Progress payment in accordance with
Article VIII - Sub Paragraph 3

Total Amount Due This Invoice $664,762.00

Partial
Collect
Net

PAST DUE PAYMENTS SHALL BEAR INTEREST AT THE HIGHEST LAWFUL RATE UNTIL REPAID, NOT TO EXCEED 1½% PER MONTH.

CORRESPONDENCE ADDRESS P.O. BOX 3109 PORTLAND, OREGON 97208 PHONE (503) 285-7557

NWMAR128428

534

NORTHWEST MARINE IRON WORKS

SHIP REPAIRERS
GENERAL MACHINE WORK
ENGINEERING

MAIL PAYMENT TO:
P.O. BOX 4000-58
PORTLAND, OREGON 97208

INVOICE

Holland America Line
300 Elliott Avenue West
Seattle, WA 98119

Attention: Mr. J. L. Adriaanse
V.P. Technical Department

CUSTOMER CODE NUMBER:

DATE December 12, 1989
OUR JOB NO. 4910
CUSTOMER'S ORDER NO.
CONTRACT NO.
INVOICE NO. 4910-1
TERMS Net

Duns No. 00-902-8580

M/V "WESTERDAM"

Furnished labor, material and equipment including freight charges to ship fabric material as designated by Owner's Representative to S/S "ROTTERDAM" at Port Everglades, Florida

Freight charges (enclosed) $2,056.80

Final
Kalley
Net

PAST DUE PAYMENTS SHALL BEAR INTEREST AT THE HIGHEST LAWFUL RATE UNTIL REPAID, NOT TO EXCEED 1½% PER MONTH.

CORRESPONDENCE ADDRESS P.O. BOX 3109 PORTLAND, OREGON 97208 PHONE (503) 285-7557

NWMAR128429

526

NORTHWEST MARINE IRON WORKS

SHIP REPAIRERS
GENERAL MACHINE WORK
ENGINEERING

MAIL PAYMENT TO:
P.O. BOX 4000-58
PORTLAND, OREGON 97208

INVOICE

M/V "GATEWAY WEST" and Owners
c/o Sunrise Shipping Agency
1515 S.W. 5th Avenue
Portland, Oregon 97201

DATE December 14, 1989
OUR JOB NO. 4197
CUSTOMER'S ORDER NO.
CONTRACT NO.
INVOICE NO. 4197-1
TERMS Net

CUSTOMER CODE NUMBER:

Duns No. 00-902-8580

M/V "GATEWAY WEST"

Furnished labor, material and equipment to accomplish repairs in accordance with the attached specifications.

Total Amount Due This Invoice $1,175.00

Final
Calley
Net

PAST DUE PAYMENTS SHALL BEAR INTEREST AT THE HIGHEST LAWFUL RATE UNTIL REPAID, NOT TO EXCEED 1½% PER MONTH.

CORRESPONDENCE ADDRESS P.O. BOX 3109 PORTLAND, OREGON 97208 PHONE (503) 285-7557

NWMAR128430

537

NORTHWEST MARINE IRON WORKS

SHIP REPAIRERS
GENERAL MACHINE WORK
ENGINEERING

MAIL PAYMENT TO:
P.O. BOX 4000-58
PORTLAND, OREGON 97208

INVOICE

M/V "CELESTINE" and Owners
c/o Star Shipping Company
320 S.W. Stark
Portland, Oregon 97204

DATE December 14, 1989
OUR JOB NO. 4198
CUSTOMER'S ORDER NO.
CONTRACT NO.
INVOICE NO. 4198-1
TERMS Net

CUSTOMER CODE NUMBER:

Duns No. 00-902-8580

M/V "CELESTINE"

Furnished labor, material and equipment to accomplish repairs in accordance with the attached specifications.

Total Amount Due This Invoice $2,316.00

Final
Called
Net

PAST DUE PAYMENTS SHALL BEAR INTEREST AT THE HIGHEST LAWFUL RATE UNTIL REPAID, NOT TO EXCEED 1½% PER MONTH.

CORRESPONDENCE ADDRESS P.O. BOX 3109 PORTLAND, OREGON 97208 PHONE (503) 285-7557

NWMAR128431

NORTHWEST MARINE IRON WORKS

JYL

SHIP REPAIRERS
GENERAL MACHINE WORK
ENGINEERING

MAIL PAYMENT TO:
P.O. BOX 4000-58
PORTLAND, OREGON 97208

INVOICE

M/V "OCEAN COSMOS" and Owners
c/o Kerr Steamship Company
One S.W. Columbia, Suite 450
Portland, Oregon 97208

DATE	December 18, 1989
OUR JOB NO.	4191
CUSTOMER'S ORDER NO.	
CONTRACT NO.	
INVOICE NO.	4191-1
TERMS	Net

CUSTOMER CODE NUMBER:

Duns No. 00-902-8580

For accomplishing repairs in accordance with the attached specifications

Total Amount Due This Invoice $824.00

FINAL
Collen
Nor

PAST DUE PAYMENTS SHALL BEAR INTEREST AT THE HIGHEST LAWFUL RATE UNTIL REPAID, NOT TO EXCEED 1½% PER MONTH.

CORRESPONDENCE ADDRESS P.O. BOX 3109 PORTLAND, OREGON 97208 PHONE (503) 285-7557

NWMAR128432

550

NORTHWEST MARINE IRON WORKS

SHIP REPAIRERS
GENERAL MACHINE WORK
ENGINEERING

MAIL PAYMENT TO:
P.O. BOX 4000-58
PORTLAND, OREGON 97208

INVOICE

M/V "K CHALLENGER" and Owners
c/o Transmarine Navigation Corporation
600 N.W. Front Avenue, Suite 1
Portland, Oregon 97209

DATE	December 19, 1989
OUR JOB NO.	4199
CUSTOMER'S ORDER NO.	
CONTRACT NO.	
INVOICE NO.	4199-1
TERMS	Net

CUSTOMER CODE NUMBER:

Duns No. 00-902-8580

M/V "K CHALLENGER"

For accomplishing repairs in accordance with the attached specifications.

Total Amount Due This Invoice $1,147.00

Final
Calley
Net

PAST DUE PAYMENTS SHALL BEAR INTEREST AT THE HIGHEST LAWFUL RATE UNTIL REPAID, NOT TO EXCEED 1½% PER MONTH.

CORRESPONDENCE ADDRESS P.O. BOX 3109 PORTLAND, OREGON 97208 PHONE (503) 285-7557

NWMAR128433

NORTHWEST MARINE IRON WORKS

561

SHIP REPAIRERS
GENERAL MACHINE WORK
ENGINEERING

MAIL PAYMENT TO:
P.O. BOX 4000-58
PORTLAND, OREGON 97208

INVOICE

M/V "MARITIME ASSOCIATE" and Owners
c/o Compass Marine
1604 Christianson Road, Suite 208
Seattle, WA 98188

DATE	December 21, 1989
OUR JOB NO.	4200
CUSTOMER'S ORDER NO.	
CONTRACT NO.	4200-1
INVOICE NO.	Net
TERMS	

CUSTOMER CODE NUMBER:

Duns No. 00-902-8580

M/V "MARITIME ASSOCIATE"

Furnished labor, material and equipment to accomplish repairs in accordance with the attached specifications.

Total Amount Due This Invoice $10,204.50

FINAL
Calley
Nev

PAST DUE PAYMENTS SHALL BEAR INTEREST AT THE HIGHEST LAWFUL RATE UNTIL REPAID, NOT TO EXCEED 1½% PER MONTH.

CORRESPONDENCE ADDRESS P.O. BOX 3109 PORTLAND, OREGON 97208 PHONE (503) 285-7557

NWMAR128434

564

NORTHWEST MARINE IRON WORKS

SHIP REPAIRERS
GENERAL MACHINE WORK
ENGINEERING

MAIL PAYMENT TO:
P.O. BOX 4000-58
PORTLAND, OREGON 97208

INVOICE

S/S "BERMUDA STAR" and Owners
c/o B.S.L. Cruises, Inc.
11086 Teaneck Road
Teaneck, New Jersey 07666

DATE	December 26, 1989
OUR JOB NO.	4906
CUSTOMER'S ORDER NO.	
CONTRACT NO.	4906-4
INVOICE NO.	Net
TERMS	

CUSTOMER CODE NUMBER:

Duns No. 00-902-8580

S/S "BERMUDA STAR"
CONVERSION

Per Article VIII, Paragraph 3, Subparagraph 4

Total Amount Due $1,329,524.00

Partial
Calley
Nev

RECEIVED JAN 3 1990

PAST DUE PAYMENTS SHALL BEAR INTEREST AT THE HIGHEST LAWFUL RATE UNTIL REPAID, NOT TO EXCEED 1½% PER MONTH.

CORRESPONDENCE ADDRESS P.O. BOX 3109 PORTLAND, OREGON 97208 PHONE (503) 285-7557

NWMAR128435

NORTHWEST MARINE IRON WORKS

565

SHIP REPAIRERS
GENERAL MACHINE WORK
ENGINEERING

MAIL PAYMENT TO:
P.O. BOX 4000-58
PORTLAND, OREGON 97208

INVOICE

S/S "BERMUDA STAR" and Owners
c/o B.S.L. Cruises, Inc.
11086 Teaneck Road
Teaneck, New Jersey 07666

DATE	December 26, 1989
OUR JOB NO.	4906
CUSTOMER'S ORDER NO.	
CONTRACT NO.	4906-5
INVOICE NO.	
TERMS	Net

CUSTOMER CODE NUMBER:

Duns No. 00-902-8580

S/S "BERMUDA STAR"
M AND R PACKAGE

PROGRESS BILLING NO. 1

Estimate based on original quotation and change orders as submitted:

75% in accordance with Northwest Marine, Inc. letter of November 29, 1989

A.	Original quotation 11/22/89 (includes credit for cancellations and items to be re-estimated)	$1,184,492.00
B.	Changes as issued to Mr. Johnathan Crispe	$1,004,868.00
C.	Starboard Shell Damages	$ 473,005.00
D.	Common Charges (excluding berthage and berthage service charges	$ 176,951.00
	Preliminary Costs	$2,839,316.00
	75% Total Amount Due	$2,129,487.00

Partial
Calley
Net

ENTERED JAN 3 1990

PAST DUE PAYMENTS SHALL BEAR INTEREST AT THE HIGHEST LAWFUL RATE UNTIL REPAID, NOT TO EXCEED 1½% PER MONTH.

CORRESPONDENCE ADDRESS P.O. BOX 3109 PORTLAND, OREGON 97208 PHONE (503) 285-7557

NWMAR128436

NORTHWEST MARINE IRON WORKS
INVOICES BY CALLEY

MONTH OF November 1989

CUSTOMER	SHIP	INVOICE DATE	INVOICE NUMBER	INVOICE AMOUNT	INVOICE PAYMENT DATE	COMMISSION PERCENT	COMMISSION AMOUNT	COMMISSION DATE PAID	COMMISSION CHECK NUMBER	
Chantiers	Ex-Noordam									
De L'Atlantique	Nieuw Amsterdam	11/2/89	3110-35	1,500.00	1/23/90	10%	150.00	2/8/90	2117	
Showa Maritime	MIV Stella R Sophy	11/2/89	4177-1	4,310.00	12/8/89	10%	431.00	2/8/90	2117	
Hanjin Container Lines	MIV Hanjin Chejiu	11/8/89	4178-1	12,045.00	1/2/90	10%	1,204.50	2/8/90	2117	
Holland America	S/S Rotterdam	11/6/89	4904-13	1,000,000.00				Rotterdam		pd 2/12/90
BSL Cruises	Bermuda Star	11/7/89	4906-2	132,953.00				Bermuda Star		3/1/90
Merit Steamship	Garnet Star	11/10/89	4181-1	841.00	1/2/90	10%	84.10	2/8/90	2117	
Holland America	S/S Rotterdam	11/22/89	4904-14	4,095,000.00				Rotterdam		pd 2/12/90
	M/V Noordam	11/01/89	4901-5	397,969.00	11/27/89	10%		Noordam		pd 11/30/89
			4901-6	75,595.00						
			4901-7	177,701.00						
			4901-8	2,960.00						
			4901-9	129,900.00						
			4901-10	66,500.00						
			4901-11	486,919.27						
		11/29/89	4901-12	(1,000,000.00)			33,754.43			
	~~S/S Rotterdam~~	~~11/28/89~~	~~4904-14~~	~~14,095,000.00~~						
		11/28/89	4904-15	12,155,000.00				Rotterdam		pd 2/12/90
		11/29/89	4904-16	(11,189,130.68)				Rotterdam		pd 2/12/90
	M/S Nieuw Amsterdam	11/29/89	4907-1	35,059.00				N. Amsterdam		pd 3/16/90
	Rotterdam	11/30/89	4904-17	(21,205.00)				Rotterdam		pd 2/12/90

NWMAR128437

464

NORTHWEST MARINE IRON WORKS

SHIP REPAIRERS
GENERAL MACHINE WORK
ENGINEERING

INVOICE

MAIL PAYMENT TO:
P.O. BOX 4000-58
PORTLAND, OREGON 97208

1441-06

Chantiers De L'Atlantique
Alshom-Atlantique
B.P. 400-44608
St. Nazaire, Cedex
FRANCE

DATE November 2, 1989
OUR JOB NO. 3110
CUSTOMER'S ORDER NO.
CONTRACT NO.
INVOICE NO. 3110-35
TERMS Net

CUSTOMER CODE NUMBER:

Duns No. 00-902-8580

Warehouse charges for the main engine generator step-up gears, Ex-NOORDAM and NIEUW AMSTERDAM.

Charges for the month of November, 1989

Total amount due this invoice $1,500.00

Partial
Calley
NW

PAST DUE PAYMENTS SHALL BEAR INTEREST AT THE HIGHEST LAWFUL RATE UNTIL REPAID, NOT TO EXCEED 1½% PER MONTH.

CORRESPONDENCE ADDRESS P.O. BOX 3109 PORTLAND, OREGON 97208 PHONE (503) 285-7557

NWMAR128438

NORTHWEST MARINE IRON WORKS

463

SHIP REPAIRERS
GENERAL MACHINE WORK
ENGINEERING

MAIL PAYMENT TO:
P.O. BOX 4000-58
PORTLAND, OREGON 97208

INVOICE

1440-01

M/V "STELLA R SOPHY" and Owners
c/o Showa Maritime
421 S.W. 6th
Portland, OR 97209

DATE November 2, 1989
OUR JOB NO. 4177
CUSTOMER'S ORDER NO.
CONTRACT NO.
INVOICE NO. 4177-1
TERMS Net

CUSTOMER CODE NUMBER:

Duns No. 00-902-8580

Furnished labor, material and equipment
to attend vessel in accordance with the attached
specifications.

Total amount due this invoice $4,310.00

Final
Calley
Net

PAST DUE PAYMENTS SHALL BEAR INTEREST AT THE HIGHEST LAWFUL RATE UNTIL REPAID, NOT TO EXCEED 1½% PER MONTH.

CORRESPONDENCE ADDRESS P.O. BOX 3109 PORTLAND, OREGON 97208 PHONE (503) 285-7557

NWMAR128439

f71

NORTHWEST MARINE IRON WORKS

SHIP REPAIRERS
GENERAL MACHINE WORK
ENGINEERING

MAIL PAYMENT TO:
P.O. BOX 4000-58
PORTLAND, OREGON 97208

INVOICE

M/V "HANJIN CHEJU"
c/o Hansin Container Lines, Ltd
401 Alaskan Way So, Pier 46
Seattle, WA 98104

DATE November 8, 1989
OUR JOB NO. 4178
CUSTOMER'S ORDER NO.
CONTRACT NO.
INVOICE NO. 4178-1
TERMS Net

CUSTOMER CODE NUMBER:

Duns No. 00-902-8580

M/V "HANJIN CHEJU"

Furnish labor, material and equipment to accomplish repairs in accordance with attached specifications.

Total Amount Due This Invoice $12,045.00

Final
Calley
Net

PAST DUE PAYMENTS SHALL BEAR INTEREST AT THE HIGHEST LAWFUL RATE UNTIL REPAID, NOT TO EXCEED 1½% PER MONTH.

CORRESPONDENCE ADDRESS P.O. BOX 3109 PORTLAND, OREGON 97208 PHONE (503) 285-7557

NWMAR128440

NORTHWEST MARINE IRON WORKS

472

SHIP REPAIRERS
GENERAL MACHINE WORK
ENGINEERING

MAIL PAYMENT TO:
P.O. BOX 4000-58
PORTLAND, OREGON 97208

INVOICE

S/S "ROTTERDAM" and Owners
c/o Holland America Line
300 Elliott Avenue
Seattle, WA 98119

DATE November 6, 1989
OUR JOB NO. 4904
CUSTOMER'S ORDER NO.
CONTRACT NO. 4904-13
INVOICE NO. Net
TERMS

CUSTOMER CODE NUMBER:

Duns No. 00-902-8580

S/S "ROTTERDAM"
PROGRESS PAYMENT 13

For work accomplished on the S/S ROTTERDAM

Total amount due this invoice $1,000,000.00

Approved:

J. L. Adriaanse
Vice President - Technical

Partial
Calley
JLW

PAST DUE PAYMENTS SHALL BEAR INTEREST AT THE HIGHEST LAWFUL RATE UNTIL REPAID, NOT TO EXCEED 1½% PER MONTH.

CORRESPONDENCE ADDRESS P.O. BOX 3109 PORTLAND, OREGON 97208 PHONE (503) 285-7557

NWMAR128441

NORTHWEST MARINE IRON WORKS

SHIP REPAIRERS
GENERAL MACHINE WORK
ENGINEERING

MAIL PAYMENT TO:
P.O. BOX 4000-58
PORTLAND, OREGON 97208

INVOICE

1453-01

S/S "BERMUDA STAR" and Owners
c/o B.S.L. Cruises, Inc.
11086 Teaneck Road
Teaneck, N.J.

DATE November 7, 1989
OUR JOB NO. 4906
CUSTOMER'S ORDER NO.
CONTRACT NO.
INVOICE NO. 4906-2
TERMS Net

CUSTOMER CODE NUMBER:

Duns No. 00-902-8580

S/S "BERMUDA STAR"
PROGRESS PAYMENT 2

Progress payment in accordance with
Article VIII - Sub Paragraph 3

Total Amount Due This Invoice $132,953.00

Paid
Collen
Mer

PAST DUE PAYMENTS SHALL BEAR INTEREST AT THE HIGHEST LAWFUL RATE UNTIL REPAID, NOT TO EXCEED 1½% PER MONTH.

CORRESPONDENCE ADDRESS P.O. BOX 3109 PORTLAND, OREGON 97208 PHONE (503) 285-7557

NWMAR128442

NORTHWEST MARINE IRON WORKS

483 ✓ 5b

SHIP REPAIRERS
GENERAL MACHINE WORK
ENGINEERING

MAIL PAYMENT TO:
P.O. BOX 4000-58
PORTLAND, OREGON 97208

INVOICE

M/V "GARNET STAR" and Owners
c/o Merit Steamship Company
101 S.W. Main, Suite 1060
Portland, Oregon 97204

DATE November 10, 1989
OUR JOB NO. 4181
CUSTOMER'S ORDER NO.
CONTRACT NO.
INVOICE NO. 4181-1
TERMS Net

CUSTOMER CODE NUMBER:

Duns No. 00-902-8580

M/V "GARNET STAR"

Furnished labor, material, and equipment to accomplish repairs in accordance with the attached specifications.

Total Amount Due This Invoice $841.00

Dental
Calley (5)
NW

✓

PAST DUE PAYMENTS SHALL BEAR INTEREST AT THE HIGHEST LAWFUL RATE UNTIL REPAID, NOT TO EXCEED 1½% PER MONTH.

CORRESPONDENCE ADDRESS P.O. BOX 3109 PORTLAND, OREGON 97208 PHONE (503) 285-7557

NORTHWEST MARINE IRON WORKS

499

SHIP REPAIRERS
GENERAL MACHINE WORK
ENGINEERING

MAIL PAYMENT TO:
P.O. BOX 4000-58
PORTLAND, OREGON 97208

INVOICE

S/S "ROTTERDAM" and Owners
c/o Holland America Lines
300 Elliott Avenue West
Seattle, Washington 98119

DATE November 22, 1989
OUR JOB NO. 4904
CUSTOMER'S ORDER NO.
CONTRACT NO.
INVOICE NO. 4904-14
TERMS Net

CUSTOMER CODE NUMBER:

Duns No. 00-902-8580

S/S "ROTTERDAM"

Furnished labor, material and equipment to accomplish work in accordance with the attached specifications

Total Amount Due This Invoice $4,095,000.00

Partial
Collect
Net

PAST DUE PAYMENTS SHALL BEAR INTEREST AT THE HIGHEST LAWFUL RATE UNTIL REPAID, NOT TO EXCEED 1½% PER MONTH.

CORRESPONDENCE ADDRESS P.O. BOX 3109 PORTLAND, OREGON 97208 PHONE (503) 285-7557

NWMAR128444

156

NORTHWEST MARINE IRON WORKS

SHIP REPAIRERS
GENERAL MACHINE WORK
ENGINEERING

MAIL PAYMENT TO:
P.O. BOX 4000-58
PORTLAND, OREGON 97208

INVOICE

M/V "NOORDAM" & Owners
c/o Holland America Line
300 Elliott Avenue West
Seattle, WA 98119

DATE October 31, 1989
OUR JOB NO. 4901
CUSTOMER'S ORDER NO.
CONTRACT NO.
INVOICE NO. 4901-5
TERMS Net

CUSTOMER CODE NUMBER:

Duns No. 00-902-8580

M/V "NOORDAM"

For furnishing labor, material and equipment to accomplish repairs in accordance with the attached specification.

TOTAL AMOUNT DUE THIS INVOICE $397,969.00

APPROVED:

J. L. ADRIAANSE
Vice President - Technical

Partial Collect NW

PAST DUE PAYMENTS SHALL BEAR INTEREST AT THE HIGHEST LAWFUL RATE UNTIL REPAID, NOT TO EXCEED 1½% PER MONTH.

CORRESPONDENCE ADDRESS P.O. BOX 3109 PORTLAND, OREGON 97208 PHONE (503) 285-7557

NWMAR128445

457

NORTHWEST MARINE IRON WORKS

SHIP REPAIRERS
GENERAL MACHINE WORK
ENGINEERING

MAIL PAYMENT TO:
P.O. BOX 4000-58
PORTLAND, OREGON 97208

INVOICE

M/V "NOORDAM" & Owners
c/o Holland America Line
300 Elliott Avenue West
Seattle, WA 98119

DATE October 31, 1989
OUR JOB NO. 4901
CUSTOMER'S ORDER NO.
CONTRACT NO.
INVOICE NO. 4901-6
TERMS Net

CUSTOMER CODE NUMBER:

Duns No. 00-902-8580

M/V "NOORDAM"

For furnishing labor, material and equipment to accomplish repairs in accordance with the attached specification.

TOTAL AMOUNT DUE THIS INVOICE $75,595.00

APPROVED:

J. L. ADRIAANSE
Vice President - Technical

Partial Collect Net

PAST DUE PAYMENTS SHALL BEAR INTEREST AT THE HIGHEST LAWFUL RATE UNTIL REPAID, NOT TO EXCEED 1½% PER MONTH.

CORRESPONDENCE ADDRESS P.O. BOX 3109 PORTLAND, OREGON 97208 PHONE (503) 285-7557

NWMAR128446

458..

NORTHWEST MARINE IRON WORKS

SHIP REPAIRERS
GENERAL MACHINE WORK
ENGINEERING

MAIL PAYMENT TO:
P.O. BOX 4000-58
PORTLAND, OREGON 97208

INVOICE

M/V "NOORDAM" & Owners
c/o Holland America Line
300 Elliott Avenue West
Seattle, WA 98119

DATE October 31, 1989
OUR JOB NO. 4901
CUSTOMER'S ORDER NO.
CONTRACT NO.
INVOICE NO. 4901-7
TERMS Net

CUSTOMER CODE NUMBER:

Duns No. 00-902-8580

M/V "NOORDAM"

For furnishing labor, material and equipment to accomplish repairs in accordance with the attached specification.

TOTAL AMOUNT DUE THIS INVOICE $177,701.00

APPROVED:

J. L. ADRIAANSE
Vice President - Technical

Partial Calling Net

PAST DUE PAYMENTS SHALL BEAR INTEREST AT THE HIGHEST LAWFUL RATE UNTIL REPAID, NOT TO EXCEED 1½% PER MONTH.

CORRESPONDENCE ADDRESS P.O. BOX 3109 PORTLAND, OREGON 97208 PHONE (503) 285-7557

NWMAR128447

4/59

NORTHWEST MARINE IRON WORKS

SHIP REPAIRERS
GENERAL MACHINE WORK
ENGINEERING

MAIL PAYMENT TO:
P.O. BOX 4000-58
PORTLAND, OREGON 97208

INVOICE

M/V "NOORDAM" & Owners
c/o Holland America Line
300 Elliott Avenue West
Seattle, WA 98119

DATE October 31, 1989
OUR JOB NO. 4901
CUSTOMER'S ORDER NO.
CONTRACT NO.
INVOICE NO. 4901-8
TERMS Net

CUSTOMER CODE NUMBER:

Duns No. 00-902-8580

M/V "NOORDAM"

For furnishing labor, material and equipment to accomplish repairs in accordance with the attached specification.

TOTAL AMOUNT DUE THIS INVOICE $2,960.00

APPROVED:

J. L. ADRIAANSE
Vice President - Technical

Partial
Collect
net

PAST DUE PAYMENTS SHALL BEAR INTEREST AT THE HIGHEST LAWFUL RATE UNTIL REPAID, NOT TO EXCEED 1½% PER MONTH.

CORRESPONDENCE ADDRESS P.O. BOX 3109 PORTLAND, OREGON 97208 PHONE (503) 285-7557

NWMAR128448

760..

NORTHWEST MARINE IRON WORKS

SHIP REPAIRERS
GENERAL MACHINE WORK
ENGINEERING

MAIL PAYMENT TO:
P.O. BOX 4000-58
PORTLAND, OREGON 97208

INVOICE

M/V "NOORDAM" & Owners
c/o Holland America Line
300 Elliott Avenue West
Seattle, WA 98119

DATE October 31, 1989
OUR JOB NO. 4901
CUSTOMER'S ORDER NO.
CONTRACT NO.
INVOICE NO. 4901-9
TERMS Net

CUSTOMER CODE NUMBER:

Duns No. 00-902-8580

M/V "NOORDAM"

For furnishing labor, material and equipment to accomplish repairs in accordance with the attached specification.

TOTAL AMOUNT DUE THIS INVOICE $129,900.00

APPROVED:

J. L. ADRIAANSE
Vice President - Technical

Partial Collect Net

PAST DUE PAYMENTS SHALL BEAR INTEREST AT THE HIGHEST LAWFUL RATE UNTIL REPAID, NOT TO EXCEED 1½% PER MONTH.

CORRESPONDENCE ADDRESS P.O. BOX 3109 PORTLAND, OREGON 97208 PHONE (503) 285-7557

NWMAR128449

461

NORTHWEST MARINE IRON WORKS

SHIP REPAIRERS
GENERAL MACHINE WORK
ENGINEERING

MAIL PAYMENT TO:
P.O. BOX 4000-58
PORTLAND, OREGON 97208

INVOICE

M/V "NOORDAM" & Owners
c/o Holland America Line
300 Elliott Avenue West
Seattle, WA 98119

DATE October 31, 1989
OUR JOB NO. 4901
CUSTOMER'S ORDER NO.
CONTRACT NO.
INVOICE NO. 4901-10
TERMS Net

CUSTOMER CODE NUMBER:

Duns No. 00-902-8580

M/V "NOORDAM"

For furnishing labor, material and equipment to accomplish repairs in accordance with the attached specification.

TOTAL AMOUNT DUE THIS INVOICE $66,500.00

APPROVED:

J. L. ADRIAANSE
Vice President - Technical

Partial Collect Net

PAST DUE PAYMENTS SHALL BEAR INTEREST AT THE HIGHEST LAWFUL RATE UNTIL REPAID, NOT TO EXCEED 1½% PER MONTH.

CORRESPONDENCE ADDRESS P.O. BOX 3109 PORTLAND, OREGON 97208 PHONE (503) 285-7557

NWMAR128450

NORTHWEST MARINE IRON WORKS

SHIP REPAIRERS
GENERAL MACHINE WORK
ENGINEERING

MAIL PAYMENT TO:
P.O. BOX 4000-58
PORTLAND, OREGON 97208

INVOICE

M/V "NOORDAM" & Owners
c/o Holland America Line
300 Elliott Avenue West
Seattle, WA 98119

DATE October 31, 1989
OUR JOB NO. 4901
CUSTOMER'S ORDER NO.
CONTRACT NO.
INVOICE NO. 4901-11
TERMS Net

CUSTOMER CODE NUMBER:

Duns No. 00-902-8580

M/V "NOORDAM"

For furnishing labor, material and equipment to accomplish repairs in accordance with the specifications excluding specification numbers 01, 02, 16, 17, 18, 23, 38, 54, and 76 which have already been invoiced.

TOTAL AMOUNT DUE THIS INVOICE $486,919.27

APPROVED:

J. L. ADRIAANSE
Vice President - Technical

Partial Calley Rev

PAST DUE PAYMENTS SHALL BEAR INTEREST AT THE HIGHEST LAWFUL RATE UNTIL REPAID, NOT TO EXCEED 1½% PER MONTH.

CORRESPONDENCE ADDRESS P.O. BOX 3109 PORTLAND, OREGON 97208 PHONE (503) 285-7557

NWMAR128451

NORTHWEST MARINE IRON WORKS

503

SHIP REPAIRERS
GENERAL MACHINE WORK
ENGINEERING

MAIL PAYMENT TO:
P.O. BOX 4000-58
PORTLAND, OREGON 97208

INVOICE

S/S "NOORDAM" and Owners
c/o Holland America Line
300 Elliott Avenue West
Seattle, Washington

DATE November 29, 1989
OUR JOB NO. 4901
CUSTOMER'S ORDER NO.
CONTRACT NO.
INVOICE NO. 4901-12
TERMS Net

CUSTOMER CODE NUMBER:

Duns No. 00-902-8580

S/S "NOORDAM"

INTERNAL ONLY

Credit due to offset progress billings

Total Credit Due (1,000,000.00)

PAST DUE PAYMENTS SHALL BEAR INTEREST AT THE HIGHEST LAWFUL RATE UNTIL REPAID, NOT TO EXCEED 1½% PER MONTH.

CORRESPONDENCE ADDRESS P.O. BOX 3109 PORTLAND, OREGON 97208 PHONE (503) 285-7557

NWMAR128452

NORTHWEST MARINE IRON WORKS

499

SHIP REPAIRERS
GENERAL MACHINE WORK
ENGINEERING

MAIL PAYMENT TO:
P.O. BOX 4000-58
PORTLAND, OREGON 97208

INVOICE

S/S "ROTTERDAM" and Owners
c/o Holland America Lines
300 Elliott Avenue West
Seattle, Washington 98119

DATE November 22, 1989
OUR JOB NO. 4904
CUSTOMER'S ORDER NO.
CONTRACT NO.
INVOICE NO. 4904-14
TERMS Net

CUSTOMER CODE NUMBER:

Duns No. 00-902-8580

S/S "ROTTERDAM"

Furnished labor, material and equipment to accomplish work in accordance with the attached specifications

Total Amount Due This Invoice $4,095,000.00

Partial
Colley
Net

PAST DUE PAYMENTS SHALL BEAR INTEREST AT THE HIGHEST LAWFUL RATE UNTIL REPAID, NOT TO EXCEED 1½% PER MONTH.

CORRESPONDENCE ADDRESS P.O. BOX 3109 PORTLAND, OREGON 97208 PHONE (503) 285-7557

NWMAR128453

501

NORTHWEST MARINE IRON WORKS

SHIP REPAIRERS
GENERAL MACHINE WORK
ENGINEERING

MAIL PAYMENT TO:
P.O. BOX 4000-58
PORTLAND, OREGON 97208

INVOICE

S/S "ROTTERDAM" and Owners
c/o Holland America Lines
300 Elliott Avenue West
Seattle, WA 98119

DATE November 28, 1989
OUR JOB NO. 4904
CUSTOMER'S ORDER NO.
CONTRACT NO.
INVOICE NO. 4904-15
TERMS Net

CUSTOMER CODE NUMBER:

Duns No. 00-902-8580

S/S "ROTTERDM"

Furnished labor, material and equipment to accomplish work in accordance with the attached specifications.

Total Amount Due This Invoice $12,155,000.00

PARTIAL
Calley
NW

PAST DUE PAYMENTS SHALL BEAR INTEREST AT THE HIGHEST LAWFUL RATE UNTIL REPAID, NOT TO EXCEED 1½% PER MONTH.

CORRESPONDENCE ADDRESS P.O. BOX 3109 PORTLAND, OREGON 97208 PHONE (503) 285-7557

NWMAR128454

NORTHWEST MARINE IRON WORKS

SHIP REPAIRERS
GENERAL MACHINE WORK
ENGINEERING

MAIL PAYMENT TO:
P.O. BOX 4000-58
PORTLAND, OREGON 97208

INVOICE

S/S "ROTTERDAM" and Owners
c/o Holland America Line
300 Elliott Avenue West
Seattle, Washington

DATE November 29, 1989
OUR JOB NO. 4904
CUSTOMER'S ORDER NO.
CONTRACT NO.
INVOICE NO. 4904-16
TERMS Net

CUSTOMER CODE NUMBER:

Duns No. 00-902-8580

S/S "ROTTERDAM"

INTERNAL ONLY

Credit due for advances issued against job.

Total Credit Due (11,189,130.68)

PAST DUE PAYMENTS SHALL BEAR INTEREST AT THE HIGHEST LAWFUL RATE UNTIL REPAID, NOT TO EXCEED 1½% PER MONTH.

CORRESPONDENCE ADDRESS P.O. BOX 3109 PORTLAND, OREGON 97208 PHONE (503) 285-7557

NWMAR128455

NORTHWEST MARINE IRON WORKS

502

SHIP REPAIRERS
GENERAL MACHINE WORK
ENGINEERING

MAIL PAYMENT TO:
P.O. BOX 4000-58
PORTLAND, OREGON 97208

INVOICE

M/S "NIEUW AMSTERDAM" and Owners
c/o Holland America Lines
300 Elliott Avenue West
Seattle, WA 98119

DATE November 29, 1989
OUR JOB NO. 4907
CUSTOMER'S ORDER NO.
CONTRACT NO. 4907-1
INVOICE NO.
TERMS Net

CUSTOMER CODE NUMBER:

Duns No. 00-902-8580

M/S "NIEUW AMSTERDAM"

Furnished labor, material and equipment to accomplish work in accordance with the attached specifications.

Total Amount Due This Invoice $35,059.00

PAST DUE PAYMENTS SHALL BEAR INTEREST AT THE HIGHEST LAWFUL RATE UNTIL REPAID, NOT TO EXCEED 1½% PER MONTH.

CORRESPONDENCE ADDRESS P.O. BOX 3109 PORTLAND, OREGON 97208 PHONE (503) 285-7557

NWMAR128456

506.

NORTHWEST MARINE IRON WORKS

SHIP REPAIRERS
GENERAL MACHINE WORK
ENGINEERING

MAIL PAYMENT TO:
P.O. BOX 4000-58
PORTLAND, OREGON 97208

INVOICE

S/S "ROTTERDAM" and Owners
c/o Holland America Line
300 Elliott Avenue West
Seattle, WA 98119

DATE November 30, 1989
OUR JOB NO. 4904
CUSTOMER'S ORDER NO.
CONTRACT NO.
INVOICE NO.
TERMS 4904-17
Net

CUSTOMER CODE NUMBER:

Duns No. 00-902-8580

S/S "ROTTERDAM"
CREDIT INVOICE

Invoice No. 4904-11 (Berthage Common Charges) Tugs and Pilots	$(22,478.00)
Invoice No. 4904-8 (Drydock Common Charges) Tugs and Pilots	$(5,619.00)
Subtotal	$(28,097.00)
Actual Costs Tugs and Pilots (attached)	$ 6,892.00
Total Credit Due	$(21,205.00)

Partial
Calling
Net

PAST DUE PAYMENTS SHALL BEAR INTEREST AT THE HIGHEST LAWFUL RATE UNTIL REPAID, NOT TO EXCEED 1½% PER MONTH.

CORRESPONDENCE ADDRESS P.O. BOX 3109 PORTLAND, OREGON 97208 PHONE (503) 285-7557

NWMAR128457

NORTHWEST MARINE IRON WORKS
INVOICES BY CALLEY

MONTH OF October 1989

CUSTOMER	SHIP	INVOICE DATE	INVOICE NUMBER	INVOICE AMOUNT	INVOICE PAYMENT DATE	COMMISSION PERCENT	COMMISSION AMOUNT	COMMISSION DATE PAID	COMMISSION CHECK NUMBER	
Holland America	S/S Rotterdam	10/2/89	4904-3	1,000,000.00	10/5/89	10%	100,000.00	Rotterdam		pd 2/12/90
Holland America	S/S Noordam	10/4/89	4901-2	500,000.00	10/12/89	10%	50,000.00	NOORDAM		pd 11/30/89
Chantiers De L'Atlantique	Ex Noordam Nieuw Amsterdam	10/1/89	3110-34	1,500.00	1/12/90	10%	150.00	2/8/90	2117	
Holland America	M/V Noordam	10/6/89	4901-4	53,101.00	11/27/89	10%	5,310.10	NOORDAM		pd 11/30/89
Holland America	M/V Noordam	10/6/89	4901-5	267,086.73	11/27/89	10%	26,708.67	NOORDAM		pd 11/30/89
Holland America	S/S Rotterdam	10/11/89	4904-4	59,529.00				Rotterdam		pd 2/12/90
Holland America	S/S Rotterdam	10/11/89	4904-5	67,282.00				Rotterdam		
Holland America	S/S Rotterdam	10/11/89	4904-6	546,327.00				Rotterdam		
Holland America	S/S Rotterdam	10/11/89	4904-7	320,689.00				Rotterdam		
Holland America	S/S Rotterdam	10/11/89	4904-8	563,690.38				Rotterdam		
Holland America	S/S Rotterdam	10/9/89	4904-9	1,000,000.00				Rotterdam		
Cascade Shipping	M/V New Tapis	10/11/89	4171-1	36,954.00		10%	3,695.40	11-20-89	2103	
Holland America	S/S Rotterdam	10/13/89	4904-10	1,000,000.00	10/17/89	10%	100,000.00	Rotterdam		pd 2/12/90
Holland America	S/S Rotterdam	10/19/89	4904-11	308,698.21				Rotterdam		
Holland America	S/S Rotterdam	10/26/89	4904-12	1,000,000.00	11/3/89	10%	100,000.00	Rotterdam		
General Steamship	S/S Sesta Confidence	10/27/89	4168-1	805.00	1/11/90	10%	80.50	2/8/90	2117	

X

NWMAR128458

376

NORTHWEST MARINE IRON WORKS

SHIP REPAIRERS
GENERAL MACHINE WORK
ENGINEERING

MAIL PAYMENT TO:
P.O. BOX 4000-58
PORTLAND, OREGON 97208

INVOICE

S/S "ROTTERDAM" and Owners
c/o Holland America Line
300 Elliott Avenue West
Seattle, WA 98119

DATE: OCT 2, 1989
OUR JOB NO.: ~~Sept. 29, 1989~~
CUSTOMER'S ORDER NO.: 4904
CONTRACT NO.:
INVOICE NO.: 4904-3
TERMS: Net

CUSTOMER CODE NUMBER:

Duns No. 00-902-8580

S/S ROTTERDAM

PROGRESS BILLING NO. 3

To bill for work in progress from September 25, 1989 to October 1, 1989

Total amount due this invoice $1,000,000.00

Paid
Allen
NW

APPROVED:

J. L. Adriaanse
Vice President, Technical

PAST DUE PAYMENTS SHALL BEAR INTEREST AT THE HIGHEST LAWFUL RATE UNTIL REPAID, NOT TO EXCEED 1½% PER MONTH.

CORRESPONDENCE ADDRESS P.O. BOX 3109 PORTLAND, OREGON 97208 PHONE (503) 285-7557

NWMAR128459

3 82

NORTHWEST MARINE IRON WORKS

SHIP REPAIRERS
GENERAL MACHINE WORK
ENGINEERING

MAIL PAYMENT TO:
P.O. BOX 4000-58
PORTLAND, OREGON 97208

INVOICE

S/S "NOORDAM" and Owners
c/o Holland America Line
300 Elliott Avenue West
Seattle, Washington 98118

DATE October 4, 1989
OUR JOB NO. 4901
CUSTOMER'S ORDER NO.
CONTRACT NO.
INVOICE NO. 4901-2
TERMS Net

CUSTOMER CODE NUMBER:

Duns No. 00-902-8580

S/S "NOORDAM"
PROGRESS BILLING NO. 2

To bill for work in progress

Total amount due this invoice $500,000.00

APPROVED: J. L. Adriaanse
Vice President - Technical

Partial
Collect
Nov

PAST DUE PAYMENTS SHALL BEAR INTEREST AT THE HIGHEST LAWFUL RATE UNTIL REPAID, NOT TO EXCEED 1½% PER MONTH.

CORRESPONDENCE ADDRESS P.O. BOX 3109 PORTLAND, OREGON 97208 PHONE (503) 285-7557

NWMAR128460

386

NORTHWEST MARINE IRON WORKS

SHIP REPAIRERS
GENERAL MACHINE WORK
ENGINEERING

MAIL PAYMENT TO:
P.O. BOX 4000-58
PORTLAND, OREGON 97208

INVOICE

Chantiers De L'Atlantique
Alshom-Atlantique
B.P. 400-44608
St. Nazaire, Cedex
FRANCE

DATE October 1, 1989
OUR JOB NO. 3110
CUSTOMER'S ORDER NO.
CONTRACT NO.
INVOICE NO. 3110-34
TERMS Net

CUSTOMER CODE NUMBER:

Duns No. 00-902-8580

Warehouse charges for the main engine generator step-up gears, Ex-NOORDAM and NIEUW AMSTERDAM.

Charges for the month of October, 1989

Total amount due this invoice $1,500.00

Partial Collect Net

PAST DUE PAYMENTS SHALL BEAR INTEREST AT THE HIGHEST LAWFUL RATE UNTIL REPAID, NOT TO EXCEED 1½% PER MONTH.

CORRESPONDENCE ADDRESS P.O. BOX 3109 PORTLAND, OREGON 97208 PHONE (503) 285-7557

NWMAR128461

404

NORTHWEST MARINE IRON WORKS

SHIP REPAIRERS
GENERAL MACHINE WORK
ENGINEERING

INVOICE

MAIL PAYMENT TO:
P.O. BOX 4000-58
PORTLAND, OREGON 97208

1386-03

M/V "NOORDAM" and Owners
c/o Holland America LIne
300 Elliott Avenue West
Seattle, WA 98119

DATE October 6, 1989
OUR JOB NO. 4901
CUSTOMER'S ORDER NO.
CONTRACT NO.
INVOICE NO. 4901-23
TERMS Net

CUSTOMER CODE NUMBER:

Duns No. 00-902-8580

M/V "NOORDAM"

Shell plate renewals in accordance with attached survey

1110 straight timehours	
466 overtime hours	$45,960.00
Material	3,678.00
Subcontractors	2,600.00
	$52,238.00
TOTAL AGREED PRICE	$50,238.00
Port of Portland 5.7%	2,863.00
TOTAL AMOUNT DUE THIS INVOICE	$53,101.00

Partial Calley

Approved:

N. Hogendoorn

PAST DUE PAYMENTS SHALL BEAR INTEREST AT THE HIGHEST LAWFUL RATE UNTIL REPAID, NOT TO EXCEED 1½% PER MONTH.

CORRESPONDENCE ADDRESS P.O. BOX 3109 PORTLAND, OREGON 97208 PHONE (503) 285-7557

NWMAR128462

NORTHWEST MARINE IRON WORKS

SHIP REPAIRERS
GENERAL MACHINE WORK
ENGINEERING

MAIL PAYMENT TO:
P.O. BOX 4000-58
PORTLAND, OREGON 97208

INVOICE

1387-04

M/V "NOORDAM" and Owners
c/o Holland America Line
300 Elliott Avenue West
Seattle, WA 98119

DATE October 6, 1989
OUR JOB NO. 4901
CUSTOMER'S ORDER NO.
CONTRACT NO.
INVOICE NO. 4901-~~3~~4
TERMS Net

CUSTOMER CODE NUMBER:

Duns No. 00-902-8580

M/V "NOORDAM"

For furnishing labor, material and equipment to provide drydock and drydock services and berthage, as well as common charges

TOTAL AMOUNT DUE THIS INVOICE $267,086.73

Partial Collect Net

Approved:

N. Hogendoorn

PAST DUE PAYMENTS SHALL BEAR INTEREST AT THE HIGHEST LAWFUL RATE UNTIL REPAID, NOT TO EXCEED 1½% PER MONTH.

CORRESPONDENCE ADDRESS P.O. BOX 3109 PORTLAND, OREGON 97208 PHONE (503) 285-7557

NWMAR128463

4/2

NORTHWEST MARINE IRON WORKS

SHIP REPAIRERS
GENERAL MACHINE WORK
ENGINEERING

MAIL PAYMENT TO:
P.O. BOX 4000-58
PORTLAND, OREGON 97208

INVOICE

S/S "ROTTERDAM" and Owners
c/o Holland America Line
300 Elliott Avenue West
Seattle, WA 98119

DATE October 11, 1989
OUR JOB NO. 4904
CUSTOMER'S ORDER NO.
CONTRACT NO.
INVOICE NO. 4904-4
TERMS Net

CUSTOMER CODE NUMBER:

Duns No. 00-902-8580

S/S "ROTTERDAM"

Furnish labor, material and equipment to accomplish repairs to the starboard propeller in accordance with the attached survey report dated September 12, 1989.

TOTAL AGREED PRICE $59,529.00

APPROVED:

J. L. Adriaanse

Patrol
Calley
mlb

PAST DUE PAYMENTS SHALL BEAR INTEREST AT THE HIGHEST LAWFUL RATE UNTIL REPAID, NOT TO EXCEED 1½% PER MONTH.

CORRESPONDENCE ADDRESS P.O. BOX 3109 PORTLAND, OREGON 97208 PHONE (503) 285-7557

NWMAR128464

411

NORTHWEST MARINE IRON WORKS

SHIP REPAIRERS
GENERAL MACHINE WORK
ENGINEERING

MAIL PAYMENT TO:
P.O. BOX 4000-58
PORTLAND, OREGON 97208

INVOICE

S/S "ROTTERDAM" and Owners
c/o Holland America Line
300 Elliott Avenue West
Seattle, WA 98119

DATE October 11, 1989
OUR JOB NO. 4904
CUSTOMER'S ORDER NO.
CONTRACT NO.
INVOICE NO. 4904-5
TERMS Net

CUSTOMER CODE NUMBER:

Duns No. 00-902-8580

S/S "ROTTERDAM"

Furnish labor, material and equipment to accomplish repairs to the port propeller in accordance with the attached survey report dated September 12, 1989.

TOTAL AGREED PRICE $67,282.00

APPROVED:

J. L. Adriaanse

Paid
Calley
nw

PAST DUE PAYMENTS SHALL BEAR INTEREST AT THE HIGHEST LAWFUL RATE UNTIL REPAID, NOT TO EXCEED 1½% PER MONTH.

CORRESPONDENCE ADDRESS P.O. BOX 3109 PORTLAND, OREGON 97208 PHONE (503) 285-7557

NWMAR128465

4/5

NORTHWEST MARINE IRON WORKS

SHIP REPAIRERS
GENERAL MACHINE WORK
ENGINEERING

MAIL PAYMENT TO:
P.O. BOX 4000-58
PORTLAND, OREGON 97208

INVOICE

S/S "ROTTERDAM" and Owners
c/o Holland America Line
300 Elliott Avenue West
Seattle, WA 98119

DATE October 11, 1989
OUR JOB NO. 4904
CUSTOMER'S ORDER NO.
CONTRACT NO.
INVOICE NO. 4904-6
TERMS Net

CUSTOMER CODE NUMBER:

Duns No. 00-902-8580

S/S "ROTTERDAM"

Furnish labor, material and equipment to accomplish repairs/renewals in the way of portside damages in accordance with the attached survey report dated September 12, 1989.

TOTAL AGREED PRICE $546,327.00

APPROVED:

J. L. Adriaanse

Partial
Cally
Net

PAST DUE PAYMENTS SHALL BEAR INTEREST AT THE HIGHEST LAWFUL RATE UNTIL REPAID, NOT TO EXCEED 1½% PER MONTH.

CORRESPONDENCE ADDRESS P.O. BOX 3109 PORTLAND, OREGON 97208 PHONE (503) 285-7557

NWMAR128466

409

NORTHWEST MARINE IRON WORKS

SHIP REPAIRERS
GENERAL MACHINE WORK
ENGINEERING

MAIL PAYMENT TO:
P.O. BOX 4000-58
PORTLAND, OREGON 97208

INVOICE

S/S "ROTTERDAM" and Owners
c/o Holland America Line
300 Elliott Avenue West
Seattle, WA 98119

DATE October 11, 1989
OUR JOB NO. 4904
CUSTOMER'S ORDER NO.
CONTRACT NO.
INVOICE NO. 4904-7
TERMS Net

CUSTOMER CODE NUMBER:

Duns No. 00-902-8580

S/S "ROTTERDAM"

Furnish labor, material and equipment to accomplish repairs/renewals in the way of starboard side damages in accordance with the attached survey report dated September 12, 1989.

TOTAL AGREED PRICE $320,689.00

APPROVED:

J. L. Adriaanse

Partial Credit Nr

PAST DUE PAYMENTS SHALL BEAR INTEREST AT THE HIGHEST LAWFUL RATE UNTIL REPAID, NOT TO EXCEED 1½% PER MONTH.

CORRESPONDENCE ADDRESS P.O. BOX 3109 PORTLAND, OREGON 97208 PHONE (503) 285-7557

NWMAR128467

408

NORTHWEST MARINE IRON WORKS

SHIP REPAIRERS
GENERAL MACHINE WORK
ENGINEERING

MAIL PAYMENT TO:
P.O. BOX 4000-58
PORTLAND, OREGON 97208

INVOICE

S/S "ROTTERDAM" and Owners
c/o Holland America Line
300 Elliott Avenue West
Seattle, WA 98119

DATE October 11, 1989
OUR JOB NO. 4904
CUSTOMER'S ORDER NO.
CONTRACT NO.
INVOICE NO. 4904-8
TERMS Net

CUSTOMER CODE NUMBER:

Duns No. 00-902-8580

S/S "ROTTERDAM"

Drydock charges (attached)	$272,497.38
Common charges (attached)	$291,193.00
TOTAL AGREED PRICE	$563,690.38

APPROVED:

J. L. Adriaanse

Paid
Alley
Net

PAST DUE PAYMENTS SHALL BEAR INTEREST AT THE HIGHEST LAWFUL RATE UNTIL REPAID, NOT TO EXCEED 1½% PER MONTH.

CORRESPONDENCE ADDRESS P.O. BOX 3109 PORTLAND, OREGON 97208 PHONE (503) 285-7557

NWMAR128468

414

NORTHWEST MARINE IRON WORKS

SHIP REPAIRERS
GENERAL MACHINE WORK
ENGINEERING

MAIL PAYMENT TO:
P.O. BOX 4000-58
PORTLAND, OREGON 97208

INVOICE

S/S "ROTTERDAM" and Owners
c/o Holland America Line
300 Elliott Avenue West
Seattle, WA 98119

DATE October 9, 1989
OUR JOB NO. 4904
CUSTOMER'S ORDER NO.
CONTRACT NO.
INVOICE NO. 4904-~~4~~ 9
TERMS Net

CUSTOMER CODE NUMBER:

Duns No. 00-902-8580

S/S "ROTTERDAM"
PROGRESS BILILNG NO. ~~3~~ 4

To bill for work in progress from October 2, through October 8, 1989

TOTAL AMOUNT DUE THIS INVOICE $1,000,000.00

Partial Collect NW

Approved:

J. L. Adriaanse
Vice President - Technical

PAST DUE PAYMENTS SHALL BEAR INTEREST AT THE HIGHEST LAWFUL RATE UNTIL REPAID, NOT TO EXCEED 1½% PER MONTH.

CORRESPONDENCE ADDRESS P.O. BOX 3109 PORTLAND, OREGON 97208 PHONE (503) 285-7557

NWMAR128469

415

NORTHWEST MARINE IRON WORKS

SHIP REPAIRERS
GENERAL MACHINE WORK
ENGINEERING

MAIL PAYMENT TO:
P.O. BOX 4000-58
PORTLAND, OREGON 97208

INVOICE

M/V "NEW LAPIS" and Owners
c/o Cascade Shipping Company
10 S.W. 10th, Suite 500
Portland, Oregon 97209

DATE October 11, 1989
OUR JOB NO. 4171
CUSTOMER'S ORDER NO.
CONTRACT NO.
INVOICE NO. 4171-1
TERMS Net

CUSTOMER CODE NUMBER:

Duns No. 00-902-8580

Furnish labor, material and equipment to accomplish work in accordance with the attached specifications.

TOTAL AMOUNT DUE THIS INVOICE $36,954.00

Dural
Collins
Not

PAST DUE PAYMENTS SHALL BEAR INTEREST AT THE HIGHEST LAWFUL RATE UNTIL REPAID, NOT TO EXCEED 1½% PER MONTH.

CORRESPONDENCE ADDRESS P.O. BOX 3109 PORTLAND, OREGON 97208 PHONE (503) 285-7557

NWMAR128470

417

NORTHWEST MARINE IRON WORKS

SHIP REPAIRERS
GENERAL MACHINE WORK
ENGINEERING

MAIL PAYMENT TO:
P.O. BOX 4000-58
PORTLAND, OREGON 97208

INVOICE

S/S "ROTTERDAM" and Owners
c/o Holland America Line
300 Elliott Avenue West
Seattle, WA 98119

DATE October 13, 1989
OUR JOB NO. 4904
CUSTOMER'S ORDER NO.
CONTRACT NO.
INVOICE NO. 4904-10
TERMS Net

CUSTOMER CODE NUMBER:

Duns No. 00-902-8580

S/S "ROTTERDAM"
PROGRESS BILLING NO. 10

TOTAL AMOUNT DUE THIS INVOICE $1,000,000.00

Pitrol
Calley
APPROVED:
Ner

J. L. Adriaanse
Vice President - Technical

PAST DUE PAYMENTS SHALL BEAR INTEREST AT THE HIGHEST LAWFUL RATE UNTIL REPAID, NOT TO EXCEED 1½% PER MONTH.

CORRESPONDENCE ADDRESS P.O. BOX 3109 PORTLAND, OREGON 97208 PHONE (503) 285-7557

NWMAR128471

4/2

NORTHWEST MARINE IRON WORKS

SHIP REPAIRERS
GENERAL MACHINE WORK
ENGINEERING

MAIL PAYMENT TO:
P.O. BOX 4000-58
PORTLAND, OREGON 97208

INVOICE

S/S "ROTTERDAM" and Owners
c/o Holland America Lines
300 Elliott Avenue West
Seattle, WA 98119

DATE October 19, 1989
OUR JOB NO. 4904
CUSTOMER'S ORDER NO.
CONTRACT NO. 4904-11
INVOICE NO.
TERMS Net

CUSTOMER CODE NUMBER:

Duns No. 00-902-8580

S/S "ROTTERDAM"

For berthage charges and common charges incurred during the accomplishment of work according to specifications.

Berthage Charges:	(Attached)	$114,205.21
Common Charges:	(Attached)	$194,493.00
TOTAL AGREED PRICE		$308,698.21

APPROVED: _____
J. L. Adriaanse

Partial
Called
Not

PAST DUE PAYMENTS SHALL BEAR INTEREST AT THE HIGHEST LAWFUL RATE UNTIL REPAID, NOT TO EXCEED 1½% PER MONTH.

CORRESPONDENCE ADDRESS P.O. BOX 3109 PORTLAND, OREGON 97208 PHONE (503) 285-7557

NWMAR128472

449

NORTHWEST MARINE IRON WORKS

SHIP REPAIRERS
GENERAL MACHINE WORK
ENGINEERING

MAIL PAYMENT TO:
P.O. BOX 4000-58
PORTLAND, OREGON 97208

INVOICE

S/S "ROTTERDAM" and Owners
c/o Holland America Line
300 Elliott Avenue West
Seattle, WA 98119

DATE October 26, 1989
OUR JOB NO. 4904
CUSTOMER'S ORDER NO.
CONTRACT NO. 4904-12
INVOICE NO. Net
TERMS

CUSTOMER CODE NUMBER:

Duns No. 00-902-8580

S/S "ROTTERDAM"
PROGRESS BILLING NO. 12

For work accomplished on the S/S "ROTTERDAM"

Amount Due This Invoice $1,000,000.00

Approved:

J. L. Adriaanse
Vice President - Technical

Partial
Collect
Net

PAST DUE PAYMENTS SHALL BEAR INTEREST AT THE HIGHEST LAWFUL RATE UNTIL REPAID, NOT TO EXCEED 1½% PER MONTH.

CORRESPONDENCE ADDRESS P.O. BOX 3109 PORTLAND, OREGON 97208 PHONE (503) 285-7557

NWMAR128473

454 ✓

NORTHWEST MARINE IRON WORKS

SHIP REPAIRERS
GENERAL MACHINE WORK
ENGINEERING

INVOICE

MAIL PAYMENT TO:
P.O. BOX 4000-58
PORTLAND, OREGON 97208

1438-01

S/S "LESTE CONFIDENCE" and Owners
c/o General Steamship Corporation
421 S.W. 6th Avenue, Suite 402
Portland, Oregon 97204

DATE October 27, 1989
OUR JOB NO. 4168
CUSTOMER'S ORDER NO.
CONTRACT NO.
INVOICE NO. 4168-1
TERMS Net

CUSTOMER CODE NUMBER:

Duns No. 00-902-8580

S/S "LESTE CONFIDENCE"

Furnished labor and material to manufacture and machine bolts in accordance with the attached specifications.

Total amount due this invoice $805.00

Dan al
Calley
Net

PAST DUE PAYMENTS SHALL BEAR INTEREST AT THE HIGHEST LAWFUL RATE UNTIL REPAID, NOT TO EXCEED 1½% PER MONTH.

CORRESPONDENCE ADDRESS P.O. BOX 3109 PORTLAND, OREGON 97208 PHONE (503) 285-7557

NWMAR128474

NORTHWEST MARINE IRON WORKS
INVOICES BY CALLEY

MONTH OF September 1989

CUSTOMER	SHIP	INVOICE DATE	INVOICE NUMBER	INVOICE AMOUNT	INVOICE PAYMENT DATE	COMMISSION PERCENT	COMMISSION AMOUNT	COMMISSION DATE PAID	COMMISSION CHECK NUMBER	
N.C. Eugene Power	s/s Rotterdam	9/6/89	4162	5,216.00	1/11/90	10%	521.60	2/8/90	2117	
Charters De L'Atlantique	Ex-Noordam Nieuw Amsterdam	9/6/89	3110-33	1,500.00	1/12/90	10%	150.00	2/8/90	2117	
International Shipping	Sea Grace	9/8/89	4160-1	5,646.00	9/26/89	10%	564.60	10/03/89	2063	
International Shipping	M/V Jufu	9/8/89	4161-1	14,420.00	9/26/89	10%	1,442.00	10/03/89	2063	
Holland America	s/s Rotterdam	9/18/89	4904-1	1,000,000.00	9/20/89	10%	100,000.00	Rotterdam	pd 2/12/90	
Orion & Global Chartering	M/V Andros Oceania	9/19/89	4164-1	1,650.00	9/28/89	10%	165.00	11/08/89	2102	
Holland America	s/s Rotterdam	9/25/89	4904-2	1,000,000.00	9/28/89	10%	100,000.00	Rotterdam	pd 2/12/90	
Cascade Shipping	M/V Sanko Moon	9/25/89	4166-1	7,137.00	10/31/89	10%	713.70	11/08/89	2102	
Holland America	s/s Noordam	9/29/89	4901-1	500,000.00	10/12/89	10%	50,000.00	NOORDAM	pd 11/30/89	
(Sunrise Shipping) Hyundai Merchant	M/V Hyundai #14	9/27/89	4167-1	902.00	1/29/90	10%	90.20	2/8/90	2117	
Holland America	Rotterdam	9/4/89	4902-13	487,250.00	9/20/89	10%	48,725.00	Rotterdam	pd 2/12/90	

NWMAR128475

321

NORTHWEST MARINE IRON WORKS

SHIP REPAIRERS
GENERAL MACHINE WORK
ENGINEERING

MAIL PAYMENT TO:
P.O. BOX 4000-58
PORTLAND, OREGON 97208

INVOICE

N.C. Engine Power
P.O. Box C88388
16711 W. Valley Highway (Tukwila)
Seattle, WA 98188

Attention: Mr. Thomas

CUSTOMER CODE NUMBER:

DATE September 6, 1989
OUR JOB NO. 4162
CUSTOMER'S ORDER NO.
CONTRACT NO.
INVOICE NO. 4162
TERMS NET

Duns No. 00-902-8580

S/S ROTTERDAM

For furnishing labor, material and equipment to accomplish repairs according the attached specifications.

Total Amount Due This Invoice $5,216.00

Final
Call by
Net

PAST DUE PAYMENTS SHALL BEAR INTEREST AT THE HIGHEST LAWFUL RATE UNTIL REPAID, NOT TO EXCEED 1½% PER MONTH.

CORRESPONDENCE ADDRESS P.O. BOX 3109 PORTLAND, OREGON 97208 PHONE (503) 285-7557

NWMAR128476

322

NORTHWEST MARINE IRON WORKS

SHIP REPAIRERS
GENERAL MACHINE WORK
ENGINEERING

MAIL PAYMENT TO:
P.O. BOX 4000-58
PORTLAND, OREGON 97208

INVOICE

Chantiers De L'Atlantique
Alshom-Atlantique
B.P. 400-44608
St. Nazaire, Cedex
FRANCE

CUSTOMER CODE NUMBER:

DATE September 6, 1989
OUR JOB NO. 3110
CUSTOMER'S ORDER NO.
CONTRACT NO.
INVOICE NO. 3110-33
TERMS NET

Duns No. 00-902-8580

Warehouse charges for the main engine generator step-up gears, Ex-NOORDAM and NIEUW AMSTERDAM.

Charges for the month of September, 1989

Total Amount Due This Invoice $1,500.00

Partial
Call Ray
Net

PAST DUE PAYMENTS SHALL BEAR INTEREST AT THE HIGHEST LAWFUL RATE UNTIL REPAID, NOT TO EXCEED 1½% PER MONTH.

CORRESPONDENCE ADDRESS P.O. BOX 3109 PORTLAND, OREGON 97208 PHONE (503) 285-7557

NWMAR128477

3-30

NORTHWEST MARINE IRON WORKS

SHIP REPAIRERS
GENERAL MACHINE WORK
ENGINEERING

INVOICE

MAIL PAYMENT TO:
P.O. BOX 4000-58
PORTLAND, OREGON 97208

1312 - 01

M/V "SEA GRACE" and Owners
c/o International Shipping Company
421 S.W. 6th Avenue
Portland, Oregon 97204

DATE	Sept. 8, 1989
OUR JOB NO.	4160
CUSTOMER'S ORDER NO.	
CONTRACT NO.	
INVOICE NO.	4160-1
TERMS	NET

CUSTOMER CODE NUMBER:

Duns No. 00-902-8580

Furnish labor, material and equipment to accomplish repairs to vessel in accordance with specifications

Total Amount Due This Invoice $5,646.00

Final
Called
MW

PAST DUE PAYMENTS SHALL BEAR INTEREST AT THE HIGHEST LAWFUL RATE UNTIL REPAID, NOT TO EXCEED 1½% PER MONTH.

CORRESPONDENCE ADDRESS P.O. BOX 3109 PORTLAND, OREGON 97208 PHONE (503) 285-7557

331

NORTHWEST MARINE IRON WORKS

SHIP REPAIRERS
GENERAL MACHINE WORK
ENGINEERING

MAIL PAYMENT TO:
P.O. BOX 4000-58
PORTLAND, OREGON 97208

INVOICE

1313-01

M/V "JUFU" and Owners
c/o International Shipping Company
421 S.W. 6th Avenue
Portland, Oregon 97204

DATE	Sept. 8, 1989
OUR JOB NO.	4161
CUSTOMER'S ORDER NO.	
CONTRACT NO.	
INVOICE NO.	4161-1
TERMS	NET

CUSTOMER CODE NUMBER:

Duns No. 00-902-8580

Furnish labor, material and equipment to accomplish repairs to vessel in accordance with specifications

Total Amount Due This Invoice $14,420.00

Final
Calley
Net

PAST DUE PAYMENTS SHALL BEAR INTEREST AT THE HIGHEST LAWFUL RATE UNTIL REPAID, NOT TO EXCEED 1½% PER MONTH.

CORRESPONDENCE ADDRESS P.O. BOX 3109 PORTLAND, OREGON 97208 PHONE (503) 285-7557

NWMAR128479

345

NORTHWEST MARINE IRON WORKS

SHIP REPAIRERS
GENERAL MACHINE WORK
ENGINEERING

MAIL PAYMENT TO:
P.O. BOX 4000-58
PORTLAND, OREGON 97208

INVOICE

S/S "ROTTERDAM" and Owners
c/o Holland America Line
300 Elliott Avenue West
Seattle, WA 98119

DATE	Sept. 18, 1989
OUR JOB NO.	4904
CUSTOMER'S ORDER NO.	
CONTRACT NO.	4904-1
INVOICE NO.	NET
TERMS	

CUSTOMER CODE NUMBER:

Duns No. 00-902-8580

S/S "ROTTERDAM"
PROGRESS BILLING NO. 1

To bill for work in progress from September 11, 1988
To September 17, 1989

Total amount due this invoice $1,000,000.00

Partial
Collect
net

APPROVED. _____
J.L. ADRIAANSE

PAST DUE PAYMENTS SHALL BEAR INTEREST AT THE HIGHEST LAWFUL RATE UNTIL REPAID, NOT TO EXCEED 1½% PER MONTH.

CORRESPONDENCE ADDRESS P.O. BOX 3109 PORTLAND, OREGON 97208 PHONE (503) 285-7557

NWMAR128480

351

NORTHWEST MARINE IRON WORKS

SHIP REPAIRERS
GENERAL MACHINE WORK
ENGINEERING

MAIL PAYMENT TO:
P.O. BOX 4000-58
PORTLAND, OREGON 97208

INVOICE

M/V "ANDROS OCEANIA" and Owners
c/o Orion and Global Chartering
29 Broadway
New York, NY 10006

DATE	Sept. 19, 1989
OUR JOB NO.	4164
CUSTOMER'S ORDER NO.	
CONTRACT NO.	
INVOICE NO.	4164-1
TERMS	NET

CUSTOMER CODE NUMBER:

Duns No. 00-902-8580

M/V "ANDROS OCEANIA"

For furnishing labor, material and equipment to accomplish repairs in accordance with the attached specification.

Total amount due this invoice $1,650.00

Dental
Collery
Net

PAST DUE PAYMENTS SHALL BEAR INTEREST AT THE HIGHEST LAWFUL RATE UNTIL REPAID, NOT TO EXCEED 1½% PER MONTH.

CORRESPONDENCE ADDRESS P.O. BOX 3109 PORTLAND, OREGON 97208 PHONE (503) 285-7557

NWMAR128481

362

NORTHWEST MARINE IRON WORKS

SHIP REPAIRERS
GENERAL MACHINE WORK
ENGINEERING

MAIL PAYMENT TO:
P.O. BOX 4000-58
PORTLAND, OREGON 97208

INVOICE

S/S "ROTTERDAM" and Owners
c/o Holland America Line
300 Elliott Avenue West
Seattle, WA 98119

DATE	Sept. 25, 1989
OUR JOB NO.	4904
CUSTOMER'S ORDER NO.	
CONTRACT NO.	
INVOICE NO.	4904-02
TERMS	NET

CUSTOMER CODE NUMBER:

Duns No. 00-902-8580

S/S "ROTTERDAM"

PROGRESS BILLING NO. 2

To bill for work in progress from September 18, 1989 to September 25, 1989

Total amount due this invoice $1,000,000.00

APPROVED: _____
J. L. ADRIAANSE
VICE PRESIDENT - TECHNICAL

Parkal
Culley
Nell

PAST DUE PAYMENTS SHALL BEAR INTEREST AT THE HIGHEST LAWFUL RATE UNTIL REPAID, NOT TO EXCEED 1½% PER MONTH.

NWMAR128482

359

NORTHWEST MARINE IRON WORKS

SHIP REPAIRERS
GENERAL MACHINE WORK
ENGINEERING

MAIL PAYMENT TO:
P.O. BOX 4000-58
PORTLAND, OREGON 97208

INVOICE

M/V "SANKO MOON" and Owners
c/o Cascade Shipping Company
10 N.W. 10th, Suite 500
Portland, OR 97209

DATE	Sept. 25, 1989
OUR JOB NO.	4166
CUSTOMER'S ORDER NO.	
CONTRACT NO.	
INVOICE NO.	4166-1
TERMS	NET

CUSTOMER CODE NUMBER:

Duns No. 00-902-8580

M/V "SANKO MOON"

Furnish labor, material, equipment and transportation to accomplish work according to the attached specification.

Total amount due this invoice $7,137.00

Final
Called
Nov

PAST DUE PAYMENTS SHALL BEAR INTEREST AT THE HIGHEST LAWFUL RATE UNTIL REPAID, NOT TO EXCEED 1½% PER MONTH.

NWMAR128483

363

NORTHWEST MARINE IRON WORKS

SHIP REPAIRERS
GENERAL MACHINE WORK
ENGINEERING

INVOICE

MAIL PAYMENT TO:
P.O. BOX 4000-58
PORTLAND, OREGON 97208

S/S "NOORDAM" and Owners
c/o Holland America Lines
300 Elliott Avenue West
Seattle, WA 98119

DATE Sept. 29, 1989
OUR JOB NO. 4901
CUSTOMER'S ORDER NO.
CONTRACT NO.
INVOICE NO. 4901-01
TERMS NET

CUSTOMER CODE NUMBER:

Duns No. 00-902-8580

S/S "NOORDAM"

PROGRESS BILLING NO. 1

To bill for work in progress from September 24, 1989 to October 1, 1989

Total amount due this invoice $500,000.00

APPROVED: _____

J.L. ADRIAANSE
VICE PRESIDENT - TECHNICAL

PAST DUE PAYMENTS SHALL BEAR INTEREST AT THE HIGHEST LAWFUL RATE UNTIL REPAID, NOT TO EXCEED 1½% PER MONTH.

CORRESPONDENCE ADDRESS P.O. BOX 3109 PORTLAND, OREGON 97208 PHONE (503) 285-7557

NWMAR128484

NORTHWEST MARINE IRON WORKS

~~382~~ 373 ✓

SHIP REPAIRERS
GENERAL MACHINE WORK
ENGINEERING

MAIL PAYMENT TO:
P.O. BOX 4000-58
PORTLAND, OREGON 97208

INVOICE

1355-01

M/V "HYUNDAI #14" and Owners
c/o Hyundai Merchant Marine (America) Ltd
Sunrise Shipping
1515 S.W. Fifth Avenue
Portland, Oregon 97201

CUSTOMER CODE NUMBER:

DATE	Sept. 27, 1989
OUR JOB NO.	4167
CUSTOMER'S ORDER NO.	
CONTRACT NO	
INVOICE NO.	4167-1
TERMS	Net

OCT 2 1989

Duns No. 00-902-8580

M/V "HYUNDAI #14"

Provided labor, materials and equipment to accomplish repairs in accordance with the attached specifications.

Total amount due this invoice $902.00

Donal Callay

OCT 2 1989

PAST DUE PAYMENTS SHALL BEAR INTEREST AT THE HIGHEST LAWFUL RATE UNTIL REPAID, NOT TO EXCEED 1½% PER MONTH.

CORRESPONDENCE ADDRESS P.O. BOX 3109 PORTLAND, OREGON 97208 PHONE (503) 285-7557

NWMAR128485

339

NORTHWEST MARINE IRON WORKS

SHIP REPAIRERS
GENERAL MACHINE WORK
ENGINEERING

MAIL PAYMENT TO:
P.O. BOX 4000-58
PORTLAND, OREGON 97208

INVOICE

1321 - 08

S/S "ROTTERDAM" and Owners
c/o Holland America Line
300 Elliott Avenue West
Seattle, WA 98119

DATE	Sept. 14, 1989
OUR JOB NO.	4902
CUSTOMER'S ORDER NO.	
CONTRACT NO.	
INVOICE NO.	4902-13
TERMS	NET

SEP 19

CUSTOMER CODE NUMBER:

Duns No. 00-902-8580

S/S "ROTTERDAM"
PROGRESS BILLING NO. 13

For furnishing labor, material and equipment to accomplish pre-fabrication and other preparatory work prior to vessel's arrival.

Item 305	Public toilet improvements	$ 7,867
Item 306	Washing machines	4,416
Item 308	Pergola	36,739
Item 309	Upgrade outside promenade deck	6,634
Item 310	Upgrade Lido kitchen	7,473
Item 311	Bow thruster	168,320
Item 313	New chilled water units	66,677
Item 315	Flushing line cleaning	12,490
Item 316	Public address system	15,467
Item 317	Carpet renewal public rooms	6,761
Item 319	Refurbish main kitchen	13,188
Item 324	Upgrade passenger bathrooms	7,415
Item 325	Renew tile floors	18,784
Item 326	Indoor swimming pool repair	13,257
Item 330	Additional shops	6,328
Item 331	Expansion of casino	8,159
Item 334	Nineteen cabin sit bath	10,182
Item 337	Three cold room freon coil	14,270
Item 342	Six (6) additional cabins	15,770
Item 345	Promenade deck ventilation alt.	22,543
		462,740
	Labor and expenses (inspections and specifications	24,510
	Total amount due this invoice	$487,250

Partial Calley Net

SEP 13

PAST DUE PAYMENTS SHALL BEAR INTEREST AT THE HIGHEST LAWFUL RATE UNTIL REPAID, NOT TO EXCEED 1½% PER MONTH.

CORRESPONDENCE ADDRESS P.O. BOX 3109 PORTLAND, OREGON 97208 PHONE (503) 285-7557

NWMAR128486

NORTHWEST MARINE IRON WORKS
INVOICES BY CALLEY

MONTH OF August 1989

CUSTOMER	SHIP	INVOICE DATE	INVOICE NUMBER	INVOICE AMOUNT	INVOICE PAYMENT DATE	COMMISSION PERCENT	COMMISSION AMOUNT	COMMISSION DATE PAID	COMMISSION CHECK NUMBER
Fritz Maritime	M/V Kazuer Maru	8/4/89	4149-1	21,977.00	8/21/89	10%	2,197.70	8/22/89	2052
Holland America	S/S Rotterdam	8/4/89	4902-10	413,174.00	9/11/89	10%	41,317.40	Rotterdam	pd 2/12/90
Chartiers De L'Atlantique	Ex-Noordam Nieuw Amsterdam	8/1/89	3110-32	1,500.00	9/14/89	10%	150.00	10/03/89	2063
Holland America	S/S Rotterdam	8/17/89	4902-11	531,765.00	9/17/89	10%	53,176.50	Rotterdam	pd 2/12/90
EAC Steamship	M/V Flora	8/18/89	4154-1	7,828.00	9/28/89	10%	782.80	10/03/89	2063
Carrier Corp	S/S Rotterdam	8/21/89	4148	640.00	10/31/89	10%	64.00	11/08/89	2102
General Steamship	M/V T.S. Prosperity	8/22/89	4156-1	104,134.00	9/18/89	10%	10,413.40	9/21/89	2060
Holland America	S/S Rotterdam	8/28/89	4902-12	515,814.48	9/15/89	10%	51,581.44	Rotterdam	pd 2/12/90

NWMAR128487

262

NORTHWEST MARINE IRON WORKS

SHIP REPAIRERS
GENERAL MACHINE WORK
ENGINEERING

MAIL PAYMENT TO:
P.O. BOX 4000-58
PORTLAND, OREGON 97208

INVOICE

M/V "KAZUEI MARU" and Owners
c/o Fritz Maritime Agencies, Inc.
3601 N.W. Yeon
Portland, OR 97208

DATE	August 4, 1989
OUR JOB NO.	4149
CUSTOMER'S ORDER NO.	
CONTRACT NO.	
INVOICE NO.	4149-1
TERMS	Net

CUSTOMER CODE NUMBER:

Duns No. 00-902-8580

M/V "KAZUEI MARU"

Furnished labor, material and equipment to accomplish repairs in accordance with the specifications.

Total Amount Due This Invoice $21,977.00

Final

Called

Net

PAST DUE PAYMENTS SHALL BEAR INTEREST AT THE HIGHEST LAWFUL RATE UNTIL REPAID, NOT TO EXCEED 1½% PER MONTH.

CORRESPONDENCE ADDRESS P.O. BOX 3109 PORTLAND, OREGON 97208 PHONE (503) 285-7557

NWMAR128488

263

NORTHWEST MARINE IRON WORKS

SHIP REPAIRERS
GENERAL MACHINE WORK
ENGINEERING

MAIL PAYMENT TO:
P.O. BOX 4000-58
PORTLAND, OREGON 97208

INVOICE

S/S "ROTTERDAM" and Owners
c/o Holland America Line
300 Elliott Avenue West
Settle, WA 98119

DATE August 4, 1989
OUR JOB NO. 4902
CUSTOMER'S ORDER NO.
CONTRACT NO.
INVOICE NO. 4902-10
TERMS Net

CUSTOMER CODE NUMBER:

Duns No. 00-902-8580

S/S "ROTTERDAM"
PROGRESS BILLING NO. 10

For furnishing labor, material and equipment to accomplish pre-fabrication and other preparatory work prior to vessel's arrival.

Item 306	Washing Machines	$ 15,785.00
Item 308	Pergola	31,512.00
Item 309	Upgrade Outside Promenade Deck	9,651.00
Item 310	Upgrade Lido Kitchen	2,911.00
Item 311	Bow Thruster	202,289.00
Item 313	New Chilled Water Units	111,289.00
Item 319	Refurbish Main Kitchen	3,444.00
Item 342	Six (6) Additional Cabins	14,087.00
Item 345	Promenade Deck Ventilation Alt.	4,554.00
Labor and expenses (inspections and specifications)		17,385.00
	Total Amount Due This Invoice	$413,174.00

Partial Calley Net

APPROVED:

Mr. J. L. Adriaanse
Vice President Technical Department

PAST DUE PAYMENTS SHALL BEAR INTEREST AT THE HIGHEST LAWFUL RATE UNTIL REPAID, NOT TO EXCEED 1½% PER MONTH.

CORRESPONDENCE ADDRESS P.O. BOX 3109 PORTLAND, OREGON 97208 PHONE (503) 285-7557

NORTHWEST MARINE IRON WORKS

SHIP REPAIRERS
GENERAL MACHINE WORK
ENGINEERING

MAIL PAYMENT TO:
P.O. BOX 4000-58
PORTLAND, OREGON 97208

INVOICE

Chantiers De L'Atlantique
Alshom-Atlantique
B.P. 400-44608
St. Nazaire, Cedex
FRANCE

DATE August 1, 1989
OUR JOB NO. 3110
CUSTOMER'S ORDER NO.
CONTRACT NO.
INVOICE NO. 3110-32
TERMS Net

CUSTOMER CODE NUMBER: 02119

Duns No. 00-902-8580

Warehouse charges for the main engine generator step-up gears, Ex-Noordam and Nieuw Amsterdam.

Charges for the month of August, 1989

TOTAL AMOUNT DUE THIS INVOICE $1,500.00

Partial Calley Net

PAST DUE PAYMENTS SHALL BEAR INTEREST AT THE HIGHEST LAWFUL RATE UNTIL REPAID, NOT TO EXCEED 1½% PER MONTH.

CORRESPONDENCE ADDRESS P.O. BOX 3109 PORTLAND, OREGON 97208 PHONE (503) 285-7557

NWMAR128490

291

NORTHWEST MARINE IRON WORKS

SHIP REPAIRERS
GENERAL MACHINE WORK
ENGINEERING

MAIL PAYMENT TO:
P.O. BOX 4000-58
PORTLAND, OREGON 97208

INVOICE

1273-06

S/S "ROTTERDAM" and Owners
c/o Holland America Line
300 Elliott Avenue West
Seattle, WA 98119

DATE: August 17, 1989
OUR JOB NO.: 4902
CUSTOMER'S ORDER NO.:
CONTRACT NO.:
INVOICE NO.: 4902-11
TERMS: Net

CUSTOMER CODE NUMBER:

Duns No. 00-902-8580

S/S "ROTTERDAM"
PROGRESS BILLING NO. 11

For furnishing labor, material and equipment to accomplish pre-fabrication by C.L.C. Group prior to vessel's arrival, including freight charges	$522,687.00

Item 329 Photo shop
Item 340 Cabin upgrade
Item 341 Lido restaurant upgrade
Item 342 Six (6) additional cabins
Item 343 Cabins S5 and S7
Item 346 Additional downlighter
Item 347 Dutch tile dividers
Item 348 Servery and buffet base tile
Item 349 Servery/buffet
Item 350 Headboard upholstery
Item 353 Cabins 460/461

Labor and expenses (inspections and specifications)	$ 9,078.00
Total Amount Due This Invoice	$531,765.00

Partial Collect Net

APPROVED:

Mr. J. L. Adriaanse
Vice President Technical Department

PAST DUE PAYMENTS SHALL BEAR INTEREST AT THE HIGHEST LAWFUL RATE UNTIL REPAID, NOT TO EXCEED 1½% PER MONTH.

CORRESPONDENCE ADDRESS P.O. BOX 3109 PORTLAND, OREGON 97208 PHONE (503) 285-7557

NWMAR128491

292

NORTHWEST MARINE IRON WORKS

SHIP REPAIRERS
GENERAL MACHINE WORK
ENGINEERING

MAIL PAYMENT TO:
P.O. BOX 4000-58
PORTLAND, OREGON 97208

INVOICE

M/V "FLORA" and Owners
c/o EAC Steamship Company
1300 S.W. 5th Avenue, Suite 2328
Portland, OR 97201

DATE August 18, 1989
OUR JOB NO. 4154
CUSTOMER'S ORDER NO.
CONTRACT NO.
INVOICE NO. 4154-1
TERMS Net

CUSTOMER CODE NUMBER:

Duns No. 00-902-8580

M/V "FLORA"

For furnishing labor, material and equipment to accomplish repairs in accordance with the attached specifications.

Total Amount Due This Invoice $7,828.00

Final
Net
Calley

PAST DUE PAYMENTS SHALL BEAR INTEREST AT THE HIGHEST LAWFUL RATE UNTIL REPAID, NOT TO EXCEED 1½% PER MONTH.

CORRESPONDENCE ADDRESS P.O. BOX 3109 PORTLAND, OREGON 97208 PHONE (503) 285-7557

NWMAR128492

293

NORTHWEST MARINE IRON WORKS

SHIP REPAIRERS
GENERAL MACHINE WORK
ENGINEERING

MAIL PAYMENT TO:
P.O. BOX 4000-58
PORTLAND, OREGON 97208

INVOICE

Carrier Corporation
7943 S.W. Cirrus Drive
Building 23
Beaverton, Oregon 97005

DATE: August 21, 1989
OUR JOB NO.: 4148
CUSTOMER'S ORDER NO.: 14-91-68
CONTRACT NO.:
INVOICE NO.: 4148-1
TERMS: Net

CUSTOMER CODE NUMBER:

Duns No. 00-902-8580

S/S "ROTTERDAM"

For furnishing labor, material and equipment to assist sub-contractor.

Agreed Price and
Total Amount Due This Invoice $640.00

Final
Calley
Net

PAST DUE PAYMENTS SHALL BEAR INTEREST AT THE HIGHEST LAWFUL RATE UNTIL REPAID, NOT TO EXCEED 1½% PER MONTH.

CORRESPONDENCE ADDRESS P.O. BOX 3109 PORTLAND, OREGON 97208 PHONE (503) 285-7557

NWMAR128493

297

NORTHWEST MARINE IRON WORKS

SHIP REPAIRERS
GENERAL MACHINE WORK
ENGINEERING

MAIL PAYMENT TO:
P.O. BOX 4000-58
PORTLAND, OREGON 97208

INVOICE

M/V "T.S. PROSPERITY" and Owners
c/o General Steamship Corp
421 S.W. 6th Avenue
Portland, Oregon 97204

DATE August 22, 1989
OUR JOB NO. 4156
CUSTOMER'S ORDER NO.
CONTRACT NO.
INVOICE NO. 4156-1
TERMS Net

CUSTOMER CODE NUMBER:

Duns No. 00-902-8580

M/V "T.S. PROSPERITY"

For furnishing labor, material and equipment to accomplish repairs in accordance with the attached specifications.

Total Amount Due This Invoice $104,134.00

Final
Calley
Net

PAST DUE PAYMENTS SHALL BEAR INTEREST AT THE HIGHEST LAWFUL RATE UNTIL REPAID, NOT TO EXCEED 1½% PER MONTH.

CORRESPONDENCE ADDRESS P.O. BOX 3109 PORTLAND, OREGON 97208 PHONE (503) 285-7557

NWMAR128494

305

NORTHWEST MARINE IRON WORKS

SHIP REPAIRERS
GENERAL MACHINE WORK
ENGINEERING

MAIL PAYMENT TO:
P.O. BOX 4000-58
PORTLAND, OREGON 97208

INVOICE

S/S "ROTTERDAM" and Owners
c/o Holland America Line
300 Elliott Avenue West
Seattle, WA 98119

DATE: August 28, 1989
OUR JOB NO.: 4902
CUSTOMER'S ORDER NO.:
CONTRACT NO.:
INVOICE NO.: 4902-12
TERMS: Net

CUSTOMER CODE NUMBER:

Duns No. 00-902-8580

S/S "ROTTERDAM"
PROGRESS BILLING NO. 12

For furnishing labor, material and equipment to accomplish pre-fabrication and other preparatory work prior to vessel's arrival.

Item 301	Engineering	$116,522.48
Item 306	Washing Machines	9,318.00
Item 308	Pergola	36,339.00
Item 309	Upgrade Outside Promenade Deck	45,515.00
Item 310	Upgrade Lido Kitchen	34,529.00
Item 311	Bow Thruster	142,670.00
Item 313	New Chilled Water Units	74,262.00
Item 319	Refurbish Main Kitchen	40,035.00
Item 342	Six (6) Additional Cabins	4,313.00
Item 345	Promenade Deck Ventilation Alt.	2,937.00
Labor and expenses (inspections and specifications)		9,374.00
	Total Amount Due This Invoice	$515,814.48

PARTIAL ~~APPROVED~~:
Calley
Net

Mr. J. L. Adriaanse
Vice President Technical Department

PAST DUE PAYMENTS SHALL BEAR INTEREST AT THE HIGHEST LAWFUL RATE UNTIL REPAID, NOT TO EXCEED 1½% PER MONTH.

CORRESPONDENCE ADDRESS P.O. BOX 3109 PORTLAND, OREGON 97208 PHONE (503) 285-7557

NWMAR128495

NORTHWEST MARINE IRON WORKS
INVOICES BY CALLEY

MONTH OF July 1989

CUSTOMER	SHIP	INVOICE DATE	INVOICE NUMBER	INVOICE AMOUNT	INVOICE PAYMENT DATE	COMMISSION PERCENT	COMMISSION AMOUNT	COMMISSION DATE PAID	COMMISSION CHECK NUMBER
International Steamship	M/V Young Sato	7/25	4143-1	8,866.00	8/4/89	10%	886.60	8/22/89	2052
Transversal International	M/V Esperanza	7/27	4144-1	1,121.00		10%	112.10	7/06/90	2138
International Shipping Co	M/V World Ajax	7/27	4137-1	2,064.00	8/4/89	10%	206.40	8/22/89	2052
Holland America	Nieuw Amsterdam	7/29	4903-5	349,445.00	9/1/89	10%	34,944.50	8/22/89	2052
Holland America	Nieuw Amsterdam	7/31	4903-8CM	<500,000.00>		10%	<50,000.00>		
Holland America	Nieuw Amsterdam	7/31	4903-9CM	<500,000.00>		10%	<50,000.00>		

NWMAR128496

NORTHWEST MARINE IRON WORKS

F 240

SHIP REPAIRERS
GENERAL MACHINE WORK
ENGINEERING

MAIL PAYMENT TO:
P.O. BOX 4000-58
PORTLAND, OREGON 97208

INVOICE

M/V "YOUNG SATO" and Owners
c/o International Steamship Company
421 S.W. 6th Avenue
Portland, Oregon 97205

DATE	July 25, 1989
OUR JOB NO.	4143
CUSTOMER'S ORDER NO.	
CONTRACT NO.	
INVOICE NO.	4143-1
TERMS	Net

CUSTOMER CODE NUMBER:

Duns No. 00-902-8580

M/V "YOUNG SATO"

For labor, material and services to accomplish the work in accordance with the specifications.

TOTAL AMOUNT DUE THIS INVOICE $ 8,866.00

Final
Calley
Net

PAST DUE PAYMENTS SHALL BEAR INTEREST AT THE HIGHEST LAWFUL RATE UNTIL REPAID, NOT TO EXCEED 1½% PER MONTH.

CORRESPONDENCE ADDRESS P.O. BOX 3109 PORTLAND, OREGON 97208 PHONE (503) 285-7557

NORTHWEST MARINE IRON WORKS

247

SHIP REPAIRERS
GENERAL MACHINE WORK
ENGINEERING

MAIL PAYMENT TO:
P.O. BOX 4000-58
PORTLAND, OREGON 97208

INVOICE

M/V "ESPERANZA V" and Owners
c/o Transversal International Corp.
9900 S.W. Wilshire St, Ste 260
Portland, Oregon 97225

DATE	July 27, 1989
OUR JOB NO.	4144
CUSTOMER'S ORDER NO.	
CONTRACT NO.	
INVOICE NO.	4144-1
TERMS	Net

CUSTOMER CODE NUMBER:

Duns No. 00-902-8580

For labor, material and equipment to accomplish repairs in accordance with the attached specifications.

Total Amount Due This Invoice $1,121.00

FINAL
Called
NW

PAST DUE PAYMENTS SHALL BEAR INTEREST AT THE HIGHEST LAWFUL RATE UNTIL REPAID, NOT TO EXCEED 1½% PER MONTH.

CORRESPONDENCE ADDRESS P.O. BOX 3109 PORTLAND, OREGON 97208 PHONE (503) 285-7557

NWMAR128498

NORTHWEST MARINE IRON WORKS

2x8 ✓

SHIP REPAIRERS
GENERAL MACHINE WORK
ENGINEERING

MAIL PAYMENT TO:
P.O. BOX 4000-58
PORTLAND, OREGON 97208

INVOICE

M/V "WORLD AJAX" and Owners
c/o International Shipping Company
421 S.W. 6th Avenue
Portland, Oregon 97205

DATE	July 27, 1989
OUR JOB NO.	4137
CUSTOMER'S ORDER NO.	
CONTRACT NO.	
INVOICE NO.	4137 -1
TERMS	Net

CUSTOMER CODE NUMBER:

Duns No. 00-902-8580

For labor, material and equipment to accomplish repairs in accordance with the attached specifications.

Total Amount Due This Invoice $2,064.00

FINAL
Called
Net

PAST DUE PAYMENTS SHALL BEAR INTEREST AT THE HIGHEST LAWFUL RATE UNTIL REPAID, NOT TO EXCEED 1½% PER MONTH.

CORRESPONDENCE ADDRESS P.O. BOX 3109 PORTLAND, OREGON 97208 PHONE (503) 285-7557

NWMAR128499

250

NORTHWEST MARINE IRON WORKS

SHIP REPAIRERS
GENERAL MACHINE WORK
ENGINEERING

MAIL PAYMENT TO:
P.O. BOX 4000-58
PORTLAND, OREGON 97208

INVOICE

M/V "NIEUW AMSTERDAM" and Owners
c/o Holland America Line
300 Elliott Avenue West
Seattle, WA 98119

DATE	~~June~~ July 29, 1989
OUR JOB NO.	4903
CUSTOMER'S ORDER NO.	
CONTRACT NO.	
INVOICE NO	4903-5
TERMS	Net upon Receipt

CUSTOMER CODE NUMBER:

Duns No. 00-902-8580

M/V "NIEUW AMSTERDAM"

For furnishing labor, and material to accomplish repairs in accordance with attached specifications.

Total Amount Due This Invoice $ 349,445.00

APPROVED:

J.L. ADRIAANSE
Vice President - Technical

Date: _____

PAST DUE PAYMENTS SHALL BEAR INTEREST AT THE HIGHEST LAWFUL RATE UNTIL REPAID, NOT TO EXCEED 1½% PER MONTH

CORRESPONDENCE ADDRESS PO BOX 3109 PORTLAND, OREGON 97208 PHONE (503) 285-7557

NWMAR128500

253

NORTHWEST MARINE IRON WORKS

SHIP REPAIRERS
GENERAL MACHINE WORK
ENGINEERING

INVOICE

MAIL PAYMENT TO:
P.O. BOX 4000-58
PORTLAND, OREGON 97208

M/V "NIEUW AMSTERDAM"

DATE July 31, 1989
OUR JOB NO. 4903
CUSTOMER'S ORDER NO.
CONTRACT NO.
INVOICE NO. 4903-08
TERMS

CUSTOMER CODE NUMBER:

Duns No. 00-902-8580

CREDIT MEMO

FOR INTERNAL USE ONLY

M.V. "NIEUW AMSTERDAM"

TOTAL AMOUNT THIS CREDIT MEMO: ($500,000.00)

APPLY TO INVOICE 4903-01

FOR INTERNAL USE ONLY

PAST DUE PAYMENTS SHALL BEAR INTEREST AT THE HIGHEST LAWFUL RATE UNTIL REPAID, NOT TO EXCEED 1½% PER MONTH.

CORRESPONDENCE ADDRESS P.O. BOX 3109 PORTLAND, OREGON 97208 PHONE (503) 285-7557

NWMAR128501

254

NORTHWEST MARINE IRON WORKS

SHIP REPAIRERS
GENERAL MACHINE WORK
ENGINEERING

MAIL PAYMENT TO:
P.O. BOX 4000-58
PORTLAND, OREGON 97208

INVOICE

M/V "NIEUW AMSTERDAM"

DATE July 31, 1989
OUR JOB NO. 4903
CUSTOMER'S ORDER NO.
CONTRACT NO.
INVOICE NO. 4903-09
TERMS

CUSTOMER CODE NUMBER:

Duns No. 00-902-8580

CREDIT MEMO

FOR INTERNAL USE ONLY

M.V. "NIEUW AMSTERDAM"

TOTAL AMOUNT THIS CREDIT MEMO: (500,000.00)

APPLY TO INVOICE 4903-02

FOR INTERNAL USE ONLY

FINAL

PAST DUE PAYMENTS SHALL BEAR INTEREST AT THE HIGHEST LAWFUL RATE UNTIL REPAID, NOT TO EXCEED 1½% PER MONTH.

CORRESPONDENCE ADDRESS P.O. BOX 3109 PORTLAND, OREGON 97208 PHONE (503) 285-7557

NWMAR128502

NORTHWEST MARINE IRON WORKS
INVOICES BY CALLEY

MONTH OF June 1989

CUSTOMER	SHIP	INVOICE DATE	INVOICE NUMBER	INVOICE AMOUNT	INVOICE PAYMENT DATE	COMMISSION PERCENT	COMMISSION AMOUNT	COMMISSION DATE PAID	COMMISSION CHECK NUMBER
Charteers De L'Atlantique	Ex-Noordam Nieuw Amsterdam	6/1/89	3110AD	1,500.00	8/24/89	10%	150.00	9/21/89	2060
Merit Steamship	M/V Melgar Bay	6/8/89	4127-1	33,524.00	6/23/89	10%	3,352.40	6/30/89	2027
Cascade Shipping	M/V Nes Campanula	6/8/89	4124-1	2,184.75	7/7/89	10%	218.48	7/27/89	2041
Dyrhdal Merchant Marine	M/V APJ Angad	6/8/89	4125-1	7,200.00	7/20/89	10%	720.00	7/27/89	2041
Holland America	S/S Rotterdam	6/9/89	4902-8	21,850.55	7/28/89	10%	2,185.00	Rotterdam	pd 2/12/90
Jones Oregon Stevedoring	M/V Melgar Bay	6/15/89	4129-1	658.00	7/12/89	10%	65.80	7/27/89	2041
Holland America	Nieuw Amsterdam	6/21/89	4903-2	500,000.00	7/3/89	10%	50,000.00	8/22/89	2052
Holland America	Nieuw Amsterdam	6/29/89	4903-4	178,828.00	7/31/89	10%	17,882.80		
Holland America	Nieuw Amsterdam	6/29/89	4903-7	541,103.00	9/1/89 CM	10%	54,110.30		
Holland America	Nieuw Amsterdam	6/29/89	4900-2	56,946.00	7/31/89	10%	5,694.60		
Holland America	Nieuw Amsterdam	6/29/89	4903-3	3,536.00	7/31/89	10%	353.60		
Holland America	Nieuw Amsterdam	6/29/89	4903-6	119,278.00	7/31/89	10%	11,927.80		
General Steamship Corp	Kaz Iwo	6/29/89	4136-1	469.00	8/18/89	10%	46.90	8/22/89	2052
Holland America	Nieuw Amsterdam	6/30/89	4128-1	⊖		—	—	—	—
Charteers De L'Atlantique	Nieuw Amsterdam Noordam	6/30/89	3110-31	1,500.00	9/14/89	10%	150.00	9/21/89	2060
Cascade Shipping	Hanei Pearl	6/30/89	4134-1	662.00	8/4/89	10%	66.00	8/22/89	2052
Holland America	Rotterdam	6/30/89	4902-9	19,755.21	7/28/89	10%	1,975.52	Rotterdam	pd 2/12/90

NWMAR128503

158

NORTHWEST MARINE IRON WORKS

SHIP REPAIRERS
GENERAL MACHINE WORK
ENGINEERING

MAIL PAYMENT TO:
P.O. BOX 4000-58
PORTLAND, OREGON 97208

INVOICE

Chantiers De L'Atlantique
Alshom-Atlantique
B.P. 400-44608
St. Nazaire, Cedex
FRANCE

DATE June 1, 1989
OUR JOB NO. 3110
CUSTOMER'S ORDER NO.
CONTRACT NO.
INVOICE NO. 3110AD
TERMS Net

CUSTOMER CODE NUMBER: 02119

Duns No. 00-902-8580

Warehouse charges for the main engine generator step-up gears, Ex-Noordam and Nieuw Amsterdam.

Charges for the month of June, 1989

TOTAL AMOUNT DUE THIS INVOICE $1,500.00

Partial Collect Net

PAST DUE PAYMENTS SHALL BEAR INTEREST AT THE HIGHEST LAWFUL RATE UNTIL REPAID, NOT TO EXCEED 1½% PER MONTH.

CORRESPONDENCE ADDRESS P.O. BOX 3109 PORTLAND, OREGON 97208 PHONE (503) 285-7557

NWMAR128504

162

NORTHWEST MARINE IRON WORKS

SHIP REPAIRERS
GENERAL MACHINE WORK
ENGINEERING

MAIL PAYMENT TO:
P.O. BOX 4000-58
PORTLAND, OREGON 97208

INVOICE

M/V "MELGAR BAY" and Owners
c/o Merit Steamship Agency
101 S.W. Main, Suite 1060
Portland, Oregon 97204

DATE	June 8, 1989
OUR JOB NO.	4127
CUSTOMER'S ORDER NO.	
CONTRACT NO.	
INVOICE NO.	4127-1
TERMS	Net

CUSTOMER CODE NUMBER:

Duns No. 00-902-8580

M/V "MELGAR BAY"

Furnished labor, material and equipment to complete work on the above vessel in accordance with the specifications.

Total Amount Due This Invoice $33,524.00

[redacted]

Final
Calley
Net

PAST DUE PAYMENTS SHALL BEAR INTEREST AT THE HIGHEST LAWFUL RATE UNTIL REPAID, NOT TO EXCEED 1½% PER MONTH.

CORRESPONDENCE ADDRESS P.O. BOX 3109 PORTLAND, OREGON 97208 PHONE (503) 285-7557

NWMAR128505

163

NORTHWEST MARINE IRON WORKS

SHIP REPAIRERS
GENERAL MACHINE WORK
ENGINEERING

MAIL PAYMENT TO:
P.O. BOX 4000-58
PORTLAND, OREGON 97208

INVOICE

M/V "NEO CAMPANULA" and Owners
c/o Cascade Shipping Company
806 S.W. Broadway, Suite 550
Portland, Oregon 97205

DATE	June 8, 1989
OUR JOB NO.	4124
CUSTOMER'S ORDER NO.	
CONTRACT NO.	
INVOICE NO.	4124-1
TERMS	Net

CUSTOMER CODE NUMBER:

Duns No. 00-902-8580

M/V "NEO CAMPANULA"

Furnished labor, material and equipment to complete work on the above vessel in accordance with the specifications.

Total Amount Due This Invoice $2,184.75

[redacted]

Final
Collar
Net

PAST DUE PAYMENTS SHALL BEAR INTEREST AT THE HIGHEST LAWFUL RATE UNTIL REPAID, NOT TO EXCEED 1½% PER MONTH.

CORRESPONDENCE ADDRESS P.O. BOX 3109 PORTLAND, OREGON 97208 PHONE (503) 285-7557

164

NORTHWEST MARINE IRON WORKS

SHIP REPAIRERS
GENERAL MACHINE WORK
ENGINEERING

MAIL PAYMENT TO:
P.O. BOX 4000-58
PORTLAND, OREGON 97208

INVOICE

M/V "APJ ANGAD" and Owners
c/o Hyundai Merchant Marine Co
Hyundai Australian Direct Line
1515 S.W. Fifth Avenue, Suite 1050
Portland, Oregon 97201

DATE	June 8, 1989
OUR JOB NO.	4125
CUSTOMER'S ORDER NO.	
CONTRACT NO.	
INVOICE NO.	4125-1
TERMS	Net

CUSTOMER CODE NUMBER:

Duns No. 00-902-8580

M/V "APJ ANGAD"

Furnished labor, material and equipment to complete work on the above vessel in accordance with the specifications.

Total Amount Due This Invoice $7,200.00

Final Calley Net

PAST DUE PAYMENTS SHALL BEAR INTEREST AT THE HIGHEST LAWFUL RATE UNTIL REPAID, NOT TO EXCEED 1½% PER MONTH.

CORRESPONDENCE ADDRESS P.O. BOX 3109 PORTLAND, OREGON 97208 PHONE (503) 285-7557

NWMAR128507

165

NORTHWEST MARINE IRON WORKS

SHIP REPAIRERS
GENERAL MACHINE WORK
ENGINEERING

MAIL PAYMENT TO:
P.O. BOX 4000-58
PORTLAND, OREGON 97208

INVOICE

S/S "ROTTERDAM" and Owners
c/o Holland America Line
300 Elliott Avenue West
Seattle, WA 98119

DATE	June 9, 1989
OUR JOB NO.	4902
CUSTOMER'S ORDER NO.	
CONTRACT NO.	
INVOICE NO.	4902-8
TERMS	Net upon Receipt

CUSTOMER CODE NUMBER:

Duns No. 00-902-8580

S/S "ROTTERDAM"
PROGRESS BILLING NO 8

Pre-planning and procurement activities (M. Rosenblatt)	$17,953.85
Labor and expenses (inspections/specifications)	3,896.70
TOTAL AMOUNT DUE THIS INVOICE	$21,850.55

APPROVED:

Partial
Calley
Net

J. L. ADRIAANSE
Vice President - Technical

PAST DUE PAYMENTS SHALL BEAR INTEREST AT THE HIGHEST LAWFUL RATE UNTIL REPAID, NOT TO EXCEED 1½% PER MONTH.

CORRESPONDENCE ADDRESS P.O. BOX 3109 PORTLAND, OREGON 97208 PHONE (503) 285-7557

176

NORTHWEST MARINE IRON WORKS

SHIP REPAIRERS
GENERAL MACHINE WORK
ENGINEERING

MAIL PAYMENT TO:
P.O. BOX 4000-58
PORTLAND, OREGON 97208

INVOICE

M/V "MELGAR BAY" and Owners
Jones Oregon Stevedoring Co.
2323 N.W. Suffolk Street
Portland, OR 97210

DATE	June 15, 1989
OUR JOB NO.	4129
CUSTOMER'S ORDER NO.	
CONTRACT NO.	
INVOICE NO.	4129-1
TERMS	Net

CUSTOMER CODE NUMBER:

Duns No. 00-902-8580

M/V "MELGAR BAY

For furnishing labor and material to accomplish work on subject vessel in accordance with specifications.

Total Amount Due This Invoice $658.00

FINAL
Callen
Net

PAST DUE PAYMENTS SHALL BEAR INTEREST AT THE HIGHEST LAWFUL RATE UNTIL REPAID, NOT TO EXCEED 1½% PER MONTH.

CORRESPONDENCE ADDRESS P.O. BOX 3109 PORTLAND, OREGON 97208 PHONE (503) 285-7557

NWMAR128509

182

NORTHWEST MARINE IRON WORKS

SHIP REPAIRERS
GENERAL MACHINE WORK
ENGINEERING

INVOICE

MAIL PAYMENT TO:
P.O. BOX 4000-58
PORTLAND, OREGON 97208

1163-02

M/V "NIEUW AMSTERDAM" and Owners
c/o Holland America Line
300 Elliott Avenue West
Seattle, WA 98119

DATE	June 21, 1989
OUR JOB NO.	4903
CUSTOMER'S ORDER NO.	
CONTRACT NO.	
INVOICE NO.	4903-2
TERMS	Net upon Receipt

CUSTOMER CODE NUMBER:

Duns No. 00-902-8580

M/V "NIEUW AMSTERDAM"
PROGRESS BILLING NO. 2

For furnishing labor, and material to accomplish repairs in progress.

Total Amount Due This Invoice $500,000.00

APPROVED:

J. L. ADRIAANSE
Vice President - Technical

Date: _____

Partial
Calley
Net

PAST DUE PAYMENTS SHALL BEAR INTEREST AT THE HIGHEST LAWFUL RATE UNTIL REPAID, NOT TO EXCEED 1½% PER MONTH.

CORRESPONDENCE ADDRESS P.O. BOX 3109 PORTLAND, OREGON 97208 PHONE (503) 285-7557

NWMAR128510

NORTHWEST MARINE IRON WORKS

183 ✓

SHIP REPAIRERS
GENERAL MACHINE WORK
ENGINEERING

INVOICE

MAIL PAYMENT TO:
P.O. BOX 4000-58
PORTLAND, OREGON 97208

1165-04

M/V "NIEUW AMSTERDAM" and Owners
c/o Holland America Line
300 Elliott Avenue West
Seattle, WA 98119

DATE	June 29, 1989
OUR JOB NO.	4903
CUSTOMER'S ORDER NO.	
CONTRACT NO.	
INVOICE NO.	4903-4
TERMS	Net upon Receipt

CUSTOMER CODE NUMBER:

Duns No. 00-902-8580

M/V "NIEUW AMSTERDAM"

For furnishing labor, and material to accomplish repairs in accordance with attached specifications.

Total Amount Due This Invoice $ 178,828.00

APPROVED:

J.L. ADRIAANSE
Vice President - Technical

Date: _____

Partial
Calley
Ver

PAST DUE PAYMENTS SHALL BEAR INTEREST AT THE HIGHEST LAWFUL RATE UNTIL REPAID, NOT TO EXCEED 1½% PER MONTH.

CORRESPONDENCE ADDRESS P.O. BOX 3109 PORTLAND, OREGON 97208 PHONE (503) 285-7557

NWMAR128511

NORTHWEST MARINE IRON WORKS

184

SHIP REPAIRERS
GENERAL MACHINE WORK
ENGINEERING

INVOICE

MAIL PAYMENT TO:
P.O. BOX 4000-58
PORTLAND, OREGON 97208

1167-06

M/V "NIEUW AMSTERDAM" and Owners
c/o Holland America Line
300 Elliott Avenue West
Seattle, WA 98119

DATE	June 29, 1989
OUR JOB NO.	4903
CUSTOMER'S ORDER NO.	
CONTRACT NO.	
INVOICE NO.	4903-7
TERMS	Net upon Receipt

CUSTOMER CODE NUMBER:

Duns No. 00-902-8580

M/V "NIEUW AMSTERDAM"

For furnishing labor, and material to accomplish repairs in accordance with attached specifications.

Total Amount Due This Invoice $ 541,103.00

APPROVED:

J.L. ADRIAANSE
Vice President - Technical

Date: _____

Partial
Calley
Net

PAST DUE PAYMENTS SHALL BEAR INTEREST AT THE HIGHEST LAWFUL RATE UNTIL REPAID, NOT TO EXCEED 1½% PER MONTH.

CORRESPONDENCE ADDRESS P.O. BOX 3109 PORTLAND, OREGON 97208 PHONE (503) 285-7557

NWMAR128512

185 ✓

NORTHWEST MARINE IRON WORKS

SHIP REPAIRERS
GENERAL MACHINE WORK
ENGINEERING

INVOICE

MAIL PAYMENT TO:
P.O. BOX 4000-58
PORTLAND, OREGON 97208

1168-02

M/V "NIEUW AMSTERDAM" and Owners
c/o Holland America Line
300 Elliott Avenue West
Seattle, WA 98119

DATE	June 29, 1989
OUR JOB NO.	4900
CUSTOMER'S ORDER NO.	
CONTRACT NO.	
INVOICE NO.	4900-2
TERMS	Net upon Receipt

CUSTOMER CODE NUMBER:

Duns No. 00-902-8580

M/V "NIEUW AMSTERDAM"

For [illegible]nishing labor, and material to accomplish re[illegible] in accordance with attached specifications.

Total Amount Due This Invoice $ 56,946.00

APPROVED:

J.L. ADRIAANSE
Vice President - Technical

Date: _____

Partial
Called
Nov

PAST DUE PAYMENTS SHALL BEAR INTEREST AT THE HIGHEST LAWFUL RATE UNTIL REPAID. NOT TO EXCEED 1½% PER MONTH.

CORRESPONDENCE ADDRESS P.O. BOX 3109 PORTLAND, OREGON 97208 PHONE (503) 285-7557

NORTHWEST MARINE IRON WORKS

186 ✓

SHIP REPAIRERS
GENERAL MACHINE WORK
ENGINEERING

INVOICE

MAIL PAYMENT TO:
P.O. BOX 4000-58
PORTLAND, OREGON 97208

1164-03

M/V "NIEUW AMSTERDAM" and Owners
c/o Holland America Line
300 Elliott Avenue West
Seattle, WA 98119

DATE	June 29, 1989
OUR JOB NO.	4903
CUSTOMER'S ORDER NO.	
CONTRACT NO.	
INVOICE NO.	4903-3
TERMS	Net upon Receipt

CUSTOMER CODE NUMBER:

Duns No. 00-902-8580

M/V "NIEUW AMSTERDAM"

For furnishing labor, and material to accomplish repairs in accordance with attached specifications.

Total Amount Due This Invoice $ 3,536.00

APPROVED:

J.L. ADRIAANSE
Vice President - Technical

Date: _____

Partial
Calley
Nel

PAST DUE PAYMENTS SHALL BEAR INTEREST AT THE HIGHEST LAWFUL RATE UNTIL REPAID, NOT TO EXCEED 1½% PER MONTH.

CORRESPONDENCE ADDRESS P.O. BOX 3109 PORTLAND, OREGON 97208 PHONE (503) 285-7557

NORTHWEST MARINE IRON WORKS

187

SHIP REPAIRERS
GENERAL MACHINE WORK
ENGINEERING

INVOICE

MAIL PAYMENT TO:
P.O. BOX 4000-58
PORTLAND, OREGON 97208

1166-05

M/V "NIEUW AMSTERDAM" and Owners
c/o Holland America Line
300 Elliott Avenue West
Seattle, WA 98119

DATE	June 29, 1989
OUR JOB NO.	4903
CUSTOMER'S ORDER NO.	
CONTRACT NO.	
INVOICE NO.	4903-6
TERMS	Net upon Receipt

CUSTOMER CODE NUMBER:

Duns No. 00-902-6580

M/V "NIEUW AMSTERDAM"

For furnishing labor, and material to accomplish repairs in accordance with attached specifications.

Total Amount Due This Invoice $ 119,278.00

APPROVED:

J.L. ADRIAANSE
Vice President - Technical

Date: _____

Partial
Only
Net

PAST DUE PAYMENTS SHALL BEAR INTEREST AT THE HIGHEST LAWFUL RATE UNTIL REPAID, NOT TO EXCEED 1½% PER MONTH.

CORRESPONDENCE ADDRESS P.O. BOX 3109 PORTLAND, OREGON 97208 PHONE (503) 285-7557

NWMAR128515

198

NORTH WEST MARINE IRON WORKS

SHIP REPAIRERS
GENERAL MACHINE WORK
ENGINEERING

MAIL PAYMENT TO:
P.O. BOX 4000-58
PORTLAND, OREGON 97208

INVOICE

1179-01

M/V "KAI TUO" and Owners
c/o General Steamship Corporation Ltd.
421 S.W. 6th Avenue, Suite 402
Portland, Oregon 97204

DATE	June 29, 1989
OUR JOB NO.	4136
CUSTOMER'S ORDER NO.	
CONTRACT NO.	
INVOICE NO.	4136-1
TERMS	Net

CUSTOMER CODE NUMBER:

Duns No. 00-902-8580

Labor, material and services to accomplish repairs in accordance with attached specifications.

Total Amount Due This Invoice $469.00

Calley
MIDL

PAST DUE PAYMENTS SHALL BEAR INTEREST AT THE HIGHEST LAWFUL RATE UNTIL REPAID, NOT TO EXCEED 1½% PER MONTH

CORRESPONDENCE ADDRESS P.O. BOX 3109 PORTLAND, OREGON 97208 PHONE (503) 285-7557

NORTHWEST MARINE IRON WORKS

202

SHIP REPAIRERS
GENERAL MACHINE WORK
ENGINEERING

MAIL PAYMENT TO:
P.O. BOX 4000-58
PORTLAND, OREGON 97208

INVOICE

1183-01

Holland America Line
Elliott Bay Office Park
300 Elliott Avenue West
Seattle, WA 98119

DATE	June 30, 1989
OUR JOB NO.	4128-1
CUSTOMER'S ORDER NO.	
CONTRACT NO.	
INVOICE NO.	4128-1
TERMS	

CUSTOMER CODE NUMBER:

Duns No. 00-902-8580

Item 1 TAILSHAFT MAINTENANCE

Provide labor and material to change the existing desiccant bags with new.

Item 2 CARPET TRANSPORT

Provide labor and material to cut thirty-six and one-half feet (36½'ft.) of blue 4" square carpet. "Bloomsberg Exminster" Rool #B35566. Transport carpet to Vancouver, B.C. in a bonded truck to the following address:

Master - M/V "NIEUW AMSTERDAM"
c/o Van-Engen International LTD
1956 Triumph Street
Vancouver, V5L 1K6 B.C. Canada

TOTAL AMOUNT DUE THIS INVOICE: NO CHARGE

Calley

PAST DUE PAYMENTS SHALL BEAR INTEREST AT THE HIGHEST LAWFUL RATE UNTIL REPAID, NOT TO EXCEED 1½% PER MONTH.

CORRESPONDENCE ADDRESS P.O. BOX 3109 PORTLAND, OREGON 97208 PHONE (503) 285-7557

NORTHWEST MARINE IRON WORKS

SHIP REPAIRERS
GENERAL MACHINE WORK
ENGINEERING

MAIL PAYMENT TO:
P.O. BOX 4000-58
PORTLAND, OREGON 97208

INVOICE

205

1186-02
Dec 30, 1989

Chantiers De L'Atlantique
Alshom-Atlantique
B.P. 400-44608
St. Nazaire, Cedex
FRANCE

DATE ~~July 1,~~ 1989
OUR JOB NO. 3110
CUSTOMER'S ORDER NO.
CONTRACT NO.
INVOICE NO. 3110-31
TERMS Net

CUSTOMER CODE NUMBER:

Duns No. 00-902-8580

Warehouse charges for the main engine generator step-up gears, Ex-Noordam and Nieuw Amsterdam.

Charges for the month of July, 1989

Outstanding Balance	$ 7.50
Amount Due This Invoice	1,500.00
Total Amount Due This Invoice	$1,507.50

Calley

PAST DUE PAYMENTS SHALL BEAR INTEREST AT THE HIGHEST LAWFUL RATE UNTIL REPAID, NOT TO EXCEED 1½% PER MONTH.

CORRESPONDENCE ADDRESS P.O. BOX 3109 PORTLAND, OREGON 97208 PHONE (503) 285-7557

NORTHWEST MARINE IRON WORKS

SHIP REPAIRERS
GENERAL MACHINE WORK
ENGINEERING

INVOICE

MAIL PAYMENT TO:
P.O. BOX 4000-58
PORTLAND, OREGON 97208

1187-01

June 30, 1989

M/V "HANEI PEARL" and Owners
c/o Cascade Shipping Company
806 S.W. Broadway, Suite 550
Portland, OR 97205

DATE	July 3, 1989
OUR JOB NO.	4134
CUSTOMER'S ORDER NO.	
CONTRACT NO.	
INVOICE NO.	4134-1
TERMS	Net

CUSTOMER CODE NUMBER:

Duns No. 00-902-8580

Item #1 Auxiliary Boiler Burner Motor

Furnish labor and material to receive from vessel at Longview, Washington one (1) Auxiliary Boiler Burner Motor and transport to Contractor's repair facility for repairs. Furnish labor, material and equipment to disassemble motor completely, remove burned windings. Furnish labor and material to rewind motor, dip and bake. Furnish and install new bearings as original. Upon completion of all repairs, reassemble, balance motor and shop test. Return repaired motor to vessel and prove satisfactory to all concerned parties.

TOTAL AMOUNT DUE THIS INVOICE: $662.00

NICK

PAST DUE PAYMENTS SHALL BEAR INTEREST AT THE HIGHEST LAWFUL RATE UNTIL REPAID, NOT TO EXCEED 1½% PER MONTH.

CORRESPONDENCE ADDRESS P.O. BOX 3109 PORTLAND, OREGON 97208 PHONE (503) 285-7557

NWMAR128519

NORTHWEST MARINE IRON WORKS

SHIP REPAIRERS
GENERAL MACHINE WORK
ENGINEERING

INVOICE

MAIL PAYMENT TO:
P.O. BOX 4000-58
PORTLAND, OREGON 97208

207

1188-04

S/S "ROTTERDAM" and Owners
c/o Holland America Lines
Elliott Bay Office Park
300 Elliott Avenue West
Seattle, WA 98119

CUSTOMER CODE NUMBER:

DATE	~~July 5, 1989~~ June 30, 1989
OUR JOB NO.	4902
CUSTOMER'S ORDER NO.	
CONTRACT NO.	
INVOICE NO.	4902-9
TERMS	Net Upon Receipt

Duns No. 00-902-8580

S/S "ROTTERDAM"
PROGRESS BILLING NO. 9

Pre-planning and procurement activities (M. Rosenblatt)	$ 9,116.63
Labor and expenses (inspections/specifications)	$10,638.58
TOTAL AMOUNT DUE THIS INVOICE	$19,755.21

APPROVED:

Colley

J.L. ADRIAANSE
Vice-President - Technical

PAST DUE PAYMENTS SHALL BEAR INTEREST AT THE HIGHEST LAWFUL RATE UNTIL REPAID. NOT TO EXCEED 1½% PER MONTH.

CORRESPONDENCE ADDRESS P.O. BOX 3109 PORTLAND, OREGON 97208 PHONE (503) 285-7557

NWMAR128520

NORTHWEST MARINE IRON WORKS
INVOICES BY CALLEY

MONTH OF May 1989

CUSTOMER	SHIP	INVOICE DATE	INVOICE NUMBER	INVOICE AMOUNT	INVOICE PAYMENT DATE	COMMISSION PERCENT	COMMISSION AMOUNT	COMMISSION DATE PAID	COMMISSION CHECK NUMBER
Chantiers De L'Atlantique	Ex-Noordam Nieuw Amsterdam	5/1	3110AC	1,500.00	6/16/89	10%	150.00	6/30/89	2027
Holland America	Rotterdam	5/8	4902E	42,119.00	6/6/89	10%	4,211.90	Rotterdam	pd 2/12/90
Transversal International	M/V Thalia	5/16	4115-1	894.00	7/6/89	10%	89.40	7/27/89	2041
International Shipping	M/V World Aretas	5/16	4109-3	1,620.00	7/28/89	10%			
International Shipping	M/V World Aretas	5/16	4109-2	980.00	7/28/89	10%	3,384.40	8/2/89	2043
International Shipping	M/V World Aretas	5/16	4109-1	31,244.00	7/28/89	10%			
Holland America	S.S. Rotterdam	5/18	4902-7	65,539.00	6/23/89	10%	6,553.90	Rotterdam	2/12/90
Interocean Steamship	M/V Rembrant	5/22	4120	2,689.00	6/19/89	10%	268.90	6/30/89	2027
Holland America	Nieuw Amsterdam	5/22	4903-1	500,000.00	6/13/89	10%	50,000.00	8/22/89	2052
Sunrise Shipping	Pisces Planter	5/19	4114-2	5,726.00	9/27/89				
Sunrise Shipping	Pisces Planter	5/19	4114-1	5,662.30	9/27/89	10%	1,138.83	10/03/89	2063
Holland America	Nieuw Amsterdam	5/24	4900-1	86,355.66	8/22/89	10%	8,635.56	8/22/89	2052

NWMAR128521

51

NORTHWEST MARINE IRON WORKS

SHIP REPAIRERS
GENERAL MACHINE WORK
ENGINEERING

MAIL PAYMENT TO:
P.O. BOX 4000-58
PORTLAND, OREGON 97208

INVOICE

Chantiers De L'Atlantique
Alshom-Atlantique
B.P. 400-44608
St. Nazaire, Cedex
FRANCE

DATE May 1, 1989
OUR JOB NO. 3110
CUSTOMER'S ORDER NO.
CONTRACT NO.
INVOICE NO. 3110AC
TERMS Net

CUSTOMER CODE NUMBER: 02119

Duns No. 00-902-8580

Warehouse charges for the main engine generator step-up gears, Ex-Noordam and Nieuw Amsterdam.

Charges for the month of May, 1989

TOTAL AMOUNT DUE THIS INVOICE $1,500.00

Partial
Calley
Net

PAST DUE PAYMENTS SHALL BEAR INTEREST AT THE HIGHEST LAWFUL RATE UNTIL REPAID, NOT TO EXCEED 1½% PER MONTH

CORRESPONDENCE ADDRESS P.O. BOX 3109 PORTLAND, OREGON 97208 PHONE (503) 285-7557

NWMAR128522

NORTHWEST MARINE IRON WORKS

50

SHIP REPAIRERS
GENERAL MACHINE WORK
ENGINEERING

MAIL PAYMENT TO:
P.O. BOX 4000-58
PORTLAND, OREGON 97208

INVOICE

S/S "ROTTERDAM" and Owners
c/o Holland America Line
300 Elliott Avenue West
Seattle, WA 98119

DATE May 8, 1989
OUR JOB NO. 3350
CUSTOMER'S ORDER NO.
CONTRACT NO.
INVOICE NO. 4902E(3452E)
TERMS Net

CUSTOMER CODE NUMBER: 07203

Duns No. 00-902-8580

S/S "ROTTERDAM"
PROGRESS BILLLING NO. 6

Pre-planning and procurement activities (M. Rosenblatt)	$40,244.00
Labor and expenses (inspections/specifications)	1,875.00
Total Amount Due This Invoice	$42,119.00

APPROVED:

J. L. ADRIAANSE
Vice President - Technical

Partial
Calley
Net

PAST DUE PAYMENTS SHALL BEAR INTEREST AT THE HIGHEST LAWFUL RATE UNTIL REPAID, NOT TO EXCEED 1½% PER MONTH

CORRESPONDENCE ADDRESS P.O. BOX 3109 PORTLAND, OREGON 97208 PHONE (503) 285-7557

NWMAR128523

88

NORTHWEST MARINE IRON WORKS

SHIP REPAIRERS
GENERAL MACHINE WORK
ENGINEERING

MAIL PAYMENT TO:
P.O. BOX 4000-58
PORTLAND, OREGON 97208

INVOICE

M/V "THALIA" and Owners
c/o Transversal International
1800 S.W. Harbor Way
Portland, Oregon

DATE	May 16, 1989
OUR JOB NO	4115
CUSTOMER'S ORDER NO.	
CONTRACT NO.	
INVOICE NO	4115-1
TERMS	Net

CUSTOMER CODE NUMBER: 030790

Duns No 00-902-8580

M/V "THALIA"

For accomplishing repairs in accordance with the attached specifications.

Total Amount Due This Invoice $894.00

FINAL
Called
Nev

PAST DUE PAYMENTS SHALL BEAR INTEREST AT THE HIGHEST LAWFUL RATE UNTIL REPAID, NOT TO EXCEED 1½% PER MONTH

CORRESPONDENCE ADDRESS P.O. BOX 3109 PORTLAND, OREGON 97208 PHONE (503) 285-7557

NWMAR128524

NORTHWEST MARINE IRON WORKS

/o 3

SHIP REPAIRERS
GENERAL MACHINE WORK
ENGINEERING

MAIL PAYMENT TO:
P.O. BOX 4000-58
PORTLAND, OREGON 97208

INVOICE

M/V "WORLD ARETUS" and Owners
c/o International Shipping Company
Commonwealth Building
421 S.W. Sixth Avenue
Portland, Oregon 97205

DATE	May 16, 1989
OUR JOB NO.	4109
CUSTOMER'S ORDER NO.	ON/M8892/ 63-33(89)
CONTRACT NO.	
INVOICE NO.	4109-3
TERMS	Net

CUSTOMER CODE NUMBER: 008520

Duns No. 00-902-8580

To accomplish repairs in accordance with the attached specifications.

Total Amount Due This Invoice $1,620.00

Partial
Calley
Net

PAST DUE PAYMENTS SHALL BEAR INTEREST AT THE HIGHEST LAWFUL RATE UNTIL REPAID, NOT TO EXCEED 1½% PER MONTH

CORRESPONDENCE ADDRESS P.O. BOX 3109 PORTLAND, OREGON 97208 PHONE (503) 285-7557

NWMAR128525

NORTHWEST MARINE IRON WORKS

SHIP REPAIRERS
GENERAL MACHINE WORK
ENGINEERING

MAIL PAYMENT TO:
P.O. BOX 4000-58
PORTLAND, OREGON 97208

INVOICE

M/V "WORLD ARETUS" and Owners
c/o International Shipping Company
Commonwealth Building
421 S.W. Sixth Avenue
Portland, Oregon 97205

DATE	May 16, 1989
OUR JOB NO.	4109
CUSTOMER'S ORDER NO.	M8893/E45
CONTRACT NO.	
INVOICE NO.	4109-2
TERMS	Net

CUSTOMER CODE NUMBER:

008520

Duns No. 00-902-8580

To accomplish repairs in accordance with the attached specifications.

Total Amount Due This Invoice $ 980.00

Partial
Calley
Net

PAST DUE PAYMENTS SHALL BEAR INTEREST AT THE HIGHEST LAWFUL RATE UNTIL REPAID, NOT TO EXCEED 1½% PER MONTH

CORRESPONDENCE ADDRESS P.O. BOX 3109 PORTLAND, OREGON 97208 PHONE (503) 285-7557

NWMAR128526

105

NORTHWEST MARINE IRON WORKS

SHIP REPAIRERS
GENERAL MACHINE WORK
ENGINEERING

MAIL PAYMENT TO:
P.O. BOX 4000-58
PORTLAND, OREGON 97208

INVOICE

M/V "WORLD ARETUS" and Owners
c/o International Shipping Company
Commonwealth Building
421 S.W. Sixth Avenue

DATE	May 16, 1989
OUR JOB NO.	4109
CUSTOMER'S ORDER NO.	ON/M8892/ 63-33(89)
CONTRACT NO.	
INVOICE NO.	4109-1
TERMS	Net

CUSTOMER CODE NUMBER:
008520

Duns No. 00-902-8580

To accomplish repairs in accordance with the attached specifications.

Total Amount Due This Invoice $31,244.00

Partial
Call 109
Net

PAST DUE PAYMENTS SHALL BEAR INTEREST AT THE HIGHEST LAWFUL RATE UNTIL REPAID, NOT TO EXCEED 1½% PER MONTH

CORRESPONDENCE ADDRESS P.O. BOX 3109 PORTLAND, OREGON 97208 PHONE (503) 285-7557

NWMAR128527

109

NORTHWEST MARINE IRON WORKS

SHIP REPAIRERS
GENERAL MACHINE WORK
ENGINEERING

MAIL PAYMENT TO:
P.O. BOX 4000-58
PORTLAND, OREGON 97208

INVOICE

S/S "ROTTERDAM" and Owners
c/o Holland America Line
300 Elliott Avenue West
Seattle, WA 98119

DATE	May 18, 1989
OUR JOB NO.	4902
CUSTOMER'S ORDER NO.	
CONTRACT NO.	
INVOICE NO.	4902-7
TERMS	Net upon receipt

CUSTOMER CODE NUMBER: 07203

Duns No. 00-902-8580

S.S. "ROTTERDAM"
PROGRESS BILLING NO. 7

Pre-planning and procurement activities (M. Rosenblatt)	$65,539.00
Labor and expenses (inspections/specifications)	-0-
TOTAL AMOUNT DUE THIS INVOICE	$65,539.00

APPROVED:

J. L. ADRIAANSE
Vice President - Technical

Partial
Call on
Net

PAST DUE PAYMENTS SHALL BEAR INTEREST AT THE HIGHEST LAWFUL RATE UNTIL REPAID, NOT TO EXCEED 1½% PER MONTH

CORRESPONDENCE ADDRESS P.O. BOX 3109 PORTLAND, OREGON 97208 PHONE (503) 285-7557

NWMAR128528

125

NORTHWEST MARINE IRON WORKS

SHIP REPAIRERS
GENERAL MACHINE WORK
ENGINEERING

MAIL PAYMENT TO:
P.O. BOX 4000-58
PORTLAND, OREGON 97208

INVOICE

M/V "REMBRANT" and Owners
c/o Interocean Steamship
621 S.W. Morrison
Portland, Oregon 97205

DATE	May 22, 1989
OUR JOB NO.	4120
CUSTOMER'S ORDER NO.	
CONTRACT NO.	
INVOICE NO.	4120-1
TERMS	Net upon Receipt

CUSTOMER CODE NUMBER: 008344

Duns No. 00-902-8580

M/V "REMBRANT"

Furnished necessary labor and material including milage to attend vessel in Portland,Terminal 4, Berth 11 to repair steering system.

Work Accomplished: After checking out syste found one full bridge rectifer blown out and the main line contacts burnt beyond use.

Contractor located new rectifer and replaced bad one. New contacts were not available. Contractor sent ould contact out to be rebuilt and resilvered. Reinstalled next a.m. Checked system out to the satisfaction of crew.

Total Amount Due This Invoice $2,669.00

FINAL
Called
Net

PAST DUE PAYMENTS SHALL BEAR INTEREST AT THE HIGHEST LAWFUL RATE UNTIL REPAID, NOT TO EXCEED 1½% PER MONTH

CORRESPONDENCE ADDRESS P.O. BOX 3109 PORTLAND, OREGON 97208 PHONE (503)-285-7557

NWMAR128529

126

NORTHWEST MARINE IRON WORKS

SHIP REPAIRERS
GENERAL MACHINE WORK
ENGINEERING

INVOICE

MAIL PAYMENT TO:
P.O. BOX 4000-58
PORTLAND, OREGON 97208

M/V "NIEUW AMSTERDAM" and Owners
c/o Holland America Line
300 Elliott Avenue West
Seattle, WA 98119

DATE	May 22, 1989
OUR JOB NO.	4903
CUSTOMER'S ORDER NO.	
CONTRACT NO.	
INVOICE NO.	4903-1
TERMS	Net upon receipt

CUSTOMER CODE NUMBER: 07203

Duns No. 00-902-8580

M.V. "NIEUW AMSTERDAM"
PROGRESS BILLING NO. 1

For furnishing labor, and material to accomplish repairs in progress.

Total Amount Due This Invoice $500,000.00

APPROVED:

J. L. ADRIAANSE
Vice President - Technical

Date: MAY 22 1989

Partial Collect

PAST DUE PAYMENTS SHALL BEAR INTEREST AT THE HIGHEST LAWFUL RATE UNTIL REPAID, NOT TO EXCEED 1½% PER MONTH.

CORRESPONDENCE ADDRESS P.O. BOX 3109 PORTLAND, OREGON 97208 PHONE (503) 285-7557

NWMAR128530

127

NORTHWEST MARINE IRON WORKS

SHIP REPAIRERS
GENERAL MACHINE WORK
ENGINEERING

INVOICE

MAIL PAYMENT TO:
P.O. BOX 4000-58
PORTLAND, OREGON 97208

M/V "PISCES PLANTER" and Owners
c/o Sunrise Shipping Agency
1515 S.W. 5th Avenue., Suite 1050
Portland, Oregon 97201

DATE	May 19, 1989
OUR JOB NO	4114
CUSTOMER'S ORDER NO.	
CONTRACT NO.	
INVOICE NO.	4114-2
TERMS	Net on receipt

CUSTOMER CODE NUMBER: 029150

Duns No. 00-902-8580

For accomplishing repairs in accordance with the attached specifications.

Total Amount Due This Invoice $5,726.00

Partial
C. Olay
Net

PAST DUE PAYMENTS SHALL BEAR INTEREST AT THE HIGHEST LAWFUL RATE UNTIL REPAID, NOT TO EXCEED 1½% PER MONTH

CORRESPONDENCE ADDRESS P.O. BOX 3109 PORTLAND, OREGON 97208 PHONE (503) 285-7557

NWMAR128531

128

NORTHWEST MARINE IRON WORKS

SHIP REPAIRERS
GENERAL MACHINE WORK
ENGINEERING

INVOICE

MAIL PAYMENT TO:
P.O. BOX 4000-58
PORTLAND, OREGON 97208

M/V "PISCES PLANTER" and Owners
c/o Sunrise Shipping Agency
1515 S.W. 5th Avenue., Suite 1050
Portland, Oregon 97201

DATE	May 19, 1989
OUR JOB NO.	4114
CUSTOMER'S ORDER NO.	
CONTRACT NO.	
INVOICE NO.	4114-1
TERMS	Net on receipt

CUSTOMER CODE NUMBER: 029150

Duns No. 00-902-8580

For accomplishing repairs in accordance with the attached specifications.

Total Amount Due This Invoice $5,662.30

Partial
Called
Net

PAST DUE PAYMENTS SHALL BEAR INTEREST AT THE HIGHEST LAWFUL RATE UNTIL REPAID, NOT TO EXCEED 1½% PER MONTH

CORRESPONDENCE ADDRESS P.O. BOX 3109 PORTLAND, OREGON 97208 PHONE (503) 285-7557

NWMAR128532

129

NORTHWEST MARINE IRON WORKS

SHIP REPAIRERS
GENERAL MACHINE WORK
ENGINEERING

MAIL PAYMENT TO:
P.O. BOX 4000-58
PORTLAND, OREGON 97208

INVOICE

M/S "NIEUW AMSTERDAM" and Owners
c/o Holland America Line
300 Elliott Avenue
Seattle, Washington 98118

DATE	May 24, 1989
OUR JOB NO.	4900
CUSTOMER'S ORDER NO.	
CONTRACT NO.	
INVOICE NO.	4900-1
TERMS	Net upon Receipt

CUSTOMER CODE NUMBER: 007203

Duns No. 00-902-8580

M/S "NIEUW AMSTERDAM"

Furnished necessary labor, material and equipment to accomplish repairs in accordance with the attached specifications.

Total Amount Due This Invoice $86,355.66

Partial
Calley
Net

PAST DUE PAYMENTS SHALL BEAR INTEREST AT THE HIGHEST LAWFUL RATE UNTIL REPAID, NOT TO EXCEED 1½% PER MONTH.

CORRESPONDENCE ADDRESS P.O. BOX 3109 PORTLAND, OREGON 97208 PHONE (503) 285-7557

NORTHWEST MARINE IRON WORKS
INVOICES BY CALLEY

MONTH OF April 1989

CUSTOMER	SHIP	INVOICE DATE	INVOICE NUMBER	INVOICE AMOUNT	INVOICE PAYMENT DATE	COMMISSION PERCENT	COMMISSION AMOUNT	COMMISSION DATE PAID	COMMISSION CHECK NUMBER
Chantiers De L'Atlantique	Ex-Noordam Nieuw Amsterdam	4/1/89	3110-AB	1,500.00	5-26-89	10%	150.00	6/30/89	2027
Holland America	Rotterdam	4/11/89	3452-C	45,683.85	5-12-89	10%	4,568.39	Rotterdam	pd 2/12/90
Vanalco	Nosira Sharon	4/21/89	3507	4,037.60	5-24-89	10%	403.76	6/30/89	2027
Holland America	Rotterdam	4/24/89	(3452-D) 4902D	66,460.78	5-12-89	10%	6,646.08	Rotterdam	pd 2/12/90

X

NWMAR128534

2

NORTHWEST MARINE IRON WORKS

SHIP REPAIRERS
GENERAL MACHINE WORK
ENGINEERING

MAIL PAYMENT TO:
P.O. BOX 4000-58
PORTLAND, OREGON 97208

INVOICE

Chantiers De L'Atlantique
Alshom-Atlantique
B.P. 400-44608
St. Nazaire, Cedex
FRANCE

DATE April 1, 1989
OUR JOB NO. 3110
CUSTOMER'S ORDER NO.
CONTRACT NO.
INVOICE NO. 3110AB
TERMS Net

CUSTOMER CODE NUMBER: 02119

Duns No. 00-902-8580

Warehouse charges for the main engine generator step-up gears, Ex-Noordam and Nieuw Amsterdam.

Charges for the month of April, 1989

TOTAL AMOUNT DUE THIS INVOICE $1,500.00

Partial
Calley
Net

PAST DUE PAYMENTS SHALL BEAR INTEREST AT THE HIGHEST LAWFUL RATE UNTIL REPAID, NOT TO EXCEED 1½% PER MONTH.

CORRESPONDENCE ADDRESS P.O. BOX 3109 PORTLAND, OREGON 97208 PHONE (503) 285-7557

NWMAR128535

10

NORTHWEST MARINE IRON WORKS

SHIP REPAIRERS
GENERAL MACHINE WORK
ENGINEERING

MAIL PAYMENT TO:
P.O. BOX 4000-58
PORTLAND, OREGON 97208

INVOICE

S/S "ROTTERDAM"
c/o Holland America Line
300 Elliott Avenue West
Seattle, WA 98119

DATE April 11, 1989
OUR JOB NO. 3452
CUSTOMER'S ORDER NO.
CONTRACT NO.
INVOICE NO. 3452C
TERMS Net

CUSTOMER CODE NUMBER: 07203

Duns No. 00-902-8580

S/S "ROTTERDAM"

PROGRESS BILLING NO. 4

Pre-planning and procurement activities.	$38,118.00
Labor and Expenses (inspections/specifications)	7,565.85
TOTAL AMOUNT DUE THIS INVOICE	$45,683.85

APPROVED:

J. L. ADRIAANSE
Vice President - Technical

Partial Call Net

PAST DUE PAYMENTS SHALL BEAR INTEREST AT THE HIGHEST LAWFUL RATE UNTIL REPAID, NOT TO EXCEED 1½% PER MONTH

CORRESPONDENCE ADDRESS P.O. BOX 3109 PORTLAND, OREGON 97208 PHONE (503) 285-7557

NWMAR128536

37

NORTHWEST MARINE IRON WORKS

SHIP REPAIRERS
GENERAL MACHINE WORK
ENGINEERING

MAIL PAYMENT TO:
P.O. BOX 4000-58
PORTLAND, OREGON 97208

INVOICE

M/V "NOSIRA SHARON" and Owners
c/o Mr. John Winters
Vanalco
5701 N.W. Lower River Road
P.O. Box 9805
Vancouver, WA 98666

CUSTOMER CODE NUMBER: 009440

DATE April 21, 1989
OUR JOB NO. 3507
CUSTOMER'S ORDER NO.
CONTRACT NO.
INVOICE NO. 3507
TERMS Net

APR 27 '89

Duns No. 00-902-8580

M/V "NOSIRA SHARON"

For services rendered in accomplishing
repairs per the attached specifications.

TOTAL AMOUNT DUE THIS INVOICE $ 4,037.60

Final
Calley
NW

SB

PAST DUE PAYMENTS SHALL BEAR INTEREST AT THE HIGHEST LAWFUL RATE UNTIL REPAID, NOT TO EXCEED 1½% PER MONTH.

CORRESPONDENCE ADDRESS P.O. BOX 3109 PORTLAND, OREGON 97208 PHONE (503) 285-7557

NWMAR128537

36

NORTHWEST MARINE IRON WORKS

SHIP REPAIRERS
GENERAL MACHINE WORK
ENGINEERING

MAIL PAYMENT TO:
P.O. BOX 4000-58
PORTLAND, OREGON 97208

INVOICE

S/S "ROTTERDAM"
c/o Holland America Line
300 Elliott Avenue West
Seattle, WA 98119

DATE April 24, 1989
OUR JOB NO. 4902 (3452)
CUSTOMER'S ORDER NO.
CONTRACT NO.
INVOICE NO. 4902D (3452D)
TERMS Net

CUSTOMER CODE NUMBER: 07203

Duns No. 00-902-8580

S/S "ROTTERDAM"
PROGRESS BILLING NO. 5

Pre-planning and procurement activities	$64,582.00
Labor and expenses (inspections/specifications)	1,878.78
TOTAL AMOUNT DUE THIS INVOICE	$66,460.78

APPROVED:

J. L. ADRIAANSE
Vice President - Technical

Pantal
Calley
Net

PAST DUE PAYMENTS SHALL BEAR INTEREST AT THE HIGHEST LAWFUL RATE UNTIL REPAID, NOT TO EXCEED 1½% PER MONTH.

CORRESPONDENCE ADDRESS P.O. BOX 3109 PORTLAND, OREGON 97208 PHONE (503) 285-7557

NWMAR128538

NORTHWEST MARINE IRON WORKS
INVOICES BY CALLEY

MONTH OF March 1989

CUSTOMER	SHIP	INVOICE DATE	INVOICE NUMBER	INVOICE AMOUNT	INVOICE PAYMENT DATE	COMMISSION PERCENT	COMMISSION AMOUNT	COMMISSION DATE PAID	COMMISSION CHECK NUMBER
Charters De L'Atlantique	Ex-Noordam Nieuw Amsterdam	3/1	3110-AA	1,500.00	4-25-89	10%	150.00	5-24-89	265652
Jones Oregon Stevedoring	Nosira Lin	3/9	3487	978.00	3-22-89	10%	97.80	3-24-89	264134
General Steamship	Ikan Janda	3/9	3489	676.00	4-21-89	10%	67.60	5-24-89	265652
Holland America	Rotterdam	3/10	3452-A	31,460.00	4-19-89	10%	3,146.00	Rotterdam	pd 2/12/90
General Steamship	Cleveland	3/13	3494	6,257.50		10%	~~627.50~~ 625.75	5/31/90	2135
Holland America	Nieuw Amsterdam	3/15	3492	11,543.83	5-18-89	10%	1,154.38	5-24-89	265652
Interocean Steamship	APJ Anand	3/21	3495	1,365.00	4-12-89	10%	136.50	5-24-89	265652
Holland America	Rotterdam	3/30	3452-B	41,846.20	5-12-89	10%	4,184.62	Rotterdam	pd 2/12/90

NWMAR128539

NORTHWEST MARINE IRON WORKS

SHIP REPAIRERS
GENERAL MACHINE WORK
ENGINEERING

MAIL PAYMENT TO:
P.O. BOX 4000-58
PORTLAND, OREGON 97208

INVOICE

Chantiers De L'Atlantique
Alshom-Atlantique
B.P. 400-44608
St. Nazaire, Cedex
FRANCE

DATE March 1, 1989
OUR JOB NO. 3110
CUSTOMER'S ORDER NO.
CONTRACT NO.
INVOICE NO. 3110AA
TERMS Net

CUSTOMER CODE NUMBER: 02119

Duns No. 00-902-8580

Warehouse charges for the main engine generator step-up gears, Ex-Noordam and Nieuw Amsterdam.

Charges for the month of March, 1989

TOTAL AMOUNT DUE THIS INVOICE $1,500.00

Partial
Collen
net

PAST DUE PAYMENTS SHALL BEAR INTEREST AT THE HIGHEST LAWFUL RATE UNTIL REPAID, NOT TO EXCEED 1½% PER MONTH.

CORRESPONDENCE ADDRESS P.O. BOX 3109 PORTLAND, OREGON 97208 PHONE (503) 285-7557

NWMAR128540

21

NORTHWEST MARINE IRON WORKS

SHIP REPAIRERS
GENERAL MACHINE WORK
ENGINEERING

MAIL PAYMENT TO:
P.O. BOX 4000-58
PORTLAND, OREGON 97208

INVOICE

M/V "NOSIRA LIN" and Owners
c/o Jones Oregon Stevedoring Company
2323 N.W. Suffolk Street
Portland, OR 97210

DATE	March 9, 1989
OUR JOB NO.	3487
CUSTOMER'S ORDER NO.	
CONTRACT NO.	
INVOICE NO.	3487
TERMS	Net

CUSTOMER CODE NUMBER: 009040

Duns No. 00-902-6580

M/V "NOSIRA LIN"

For labor, material and equipment to accomplish repairs on the above vessel in accordance with the attached specifications.

AMOUNT DUE THIS INVOICE $978.00
======

Frank Cullen
7-6

PAST DUE PAYMENTS SHALL BEAR INTEREST AT THE HIGHEST LAWFUL RATE UNTIL REPAID, NOT TO EXCEED 1½% PER MONTH.

CORRESPONDENCE ADDRESS P.O. BOX 3109 PORTLAND, OREGON 97208 PHONE (503) 285-7557

NWMAR128541

22

NORTHWEST MARINE IRON WORKS

SHIP REPAIRERS
GENERAL MACHINE WORK
ENGINEERING

MAIL PAYMENT TO:
P.O. BOX 4000-58
PORTLAND, OREGON 97208

INVOICE

M/V "IKAN TANDA" and Owners
c/o General Steamship Corporation
421 S.W. 6th Avenue, Suite 402
Portland, OR 97204

DATE March 9, 1989
OUR JOB NO. 3489
CUSTOMER'S ORDER NO.
CONTRACT NO.
INVOICE NO. 3489
TERMS Net

CUSTOMER CODE NUMBER: 006200

Duns No. 00-902-8580

M/V "IKAN TANDA"

For labor, material and equipment to accomplish repairs on the above vessel in accordance with the attached specifications.

AMOUNT DUE THIS INVOICE $676.00
======

Dual
Calley
Net

PAST DUE PAYMENTS SHALL BEAR INTEREST AT THE HIGHEST LAWFUL RATE UNTIL REPAID, NOT TO EXCEED 1½% PER MONTH.

CORRESPONDENCE ADDRESS P.O. BOX 3109 PORTLAND, OREGON 97208 PHONE (503) 285-7557

NWMAR128542

NORTHWEST MARINE IRON WORKS

27

SHIP REPAIRERS
GENERAL MACHINE WORK
ENGINEERING

MAIL PAYMENT TO:
P.O. BOX 4000-58
PORTLAND, OREGON 97208

INVOICE

S/S "ROTTERDAM"
c/o Holland America Line
300 Elliott Avenue West
Seattle, WA 98119

DATE March 10, 1989
OUR JOB NO. 3452
CUSTOMER'S ORDER NO.
CONTRACT NO.
INVOICE NO. 3452A
TERMS Net

CUSTOMER CODE NUMBER: 07203

Duns No. 00-902-8580

S/S "ROTTERDAM"

PROGRESS BILLING NO. 2

Pre-planning and procurement activities	$ 4,890.00
Labor and Expenses (inspections/specifications) (to March 10, 1989)	$26,570.00
TOTAL AMOUNT DUE THIS INVOICE	$31,460.00

APPROVED:

J. L. ADRIAANSE
Vice President - Technical

Partial
Calley
Net

PAST DUE PAYMENTS SHALL BEAR INTEREST AT THE HIGHEST LAWFUL RATE UNTIL REPAID, NOT TO EXCEED 1½% PER MONTH.

CORRESPONDENCE ADDRESS P.O. BOX 3109 PORTLAND, OREGON 97208 PHONE (503) 285-7557

NWMAR128543

31

NORTHWEST MARINE IRON WORKS

SHIP REPAIRERS
GENERAL MACHINE WORK
ENGINEERING

MAIL PAYMENT TO:
P.O. BOX 4000-58
PORTLAND, OREGON 97208

INVOICE

S/S "CLEVELAND" and Owners
c/o General Steamship Corporation
421 S.W. 6th Avenue, Suite 402
Portland, Oregon 97204

DATE	March 13, 1989
OUR JOB NO.	3494
CUSTOMER'S ORDER NO.	
CONTRACT NO.	
INVOICE NO.	3494
TERMS	Net

CUSTOMER CODE NUMBER: 006200

Duns No. 00-902-8580

S/S "CLEVELAND"

For labor, material and equipment to accomplish repairs on the above vessel in accordance with the attached specifications.

Total Amount Due $6,257.50

Final
Call/ey
Net

PAST DUE PAYMENTS SHALL BEAR INTEREST AT THE HIGHEST LAWFUL RATE UNTIL REPAID, NOT TO EXCEED 1½% PER MONTH.

CORRESPONDENCE ADDRESS P.O. BOX 3109 PORTLAND, OREGON 97208 PHONE (503) 285-7557

NWMAR128544

NORTHWEST MARINE IRON WORKS

SHIP REPAIRERS
GENERAL MACHINE WORK
ENGINEERING

MAIL PAYMENT TO:
P.O. BOX 4000-58
PORTLAND, OREGON 97208

INVOICE

M/S "NIEUW AMSTERDAM
c/o Holland America Line
300 Elliott Avenue West
Seattle, WA 98119

DATE March 15, 1989
OUR JOB NO. 3492
CUSTOMER'S ORDER NO.
CONTRACT NO.
INVOICE NO. 3492
TERMS Net

CUSTOMER CODE NUMBER: 007203

Duns No. 00-902-8580

M/S "NIEUW AMSTERDAM"

For furnishing labor and materials to accomplish repairs on above vessel in accordance with the specifications.

TOTAL AMOUNT DUE THIS INVOICE $11,543.83

PAST DUE PAYMENTS SHALL BEAR INTEREST AT THE HIGHEST LAWFUL RATE UNTIL REPAID, NOT TO EXCEED 1½% PER MONTH.

CORRESPONDENCE ADDRESS P.O. BOX 3109 PORTLAND, OREGON 97208 PHONE (503) 285-7557

NWMAR128545

45

NORTHWEST MARINE IRON WORKS

SHIP REPAIRERS
GENERAL MACHINE WORK
ENGINEERING

MAIL PAYMENT TO:
P.O. BOX 4000-58
PORTLAND, OREGON 97208

INVOICE

M/V "APJ ANAND" and Owners
c/o Interocean Steamship Co.
610 Second Avenue, Ste 1200
Seattle, WA 98104

DATE March 21, 1989
OUR JOB NO. 3495
CUSTOMER'S ORDER NO.
CONTRACT NO.
INVOICE NO. 3495
TERMS Net

CUSTOMER CODE NUMBER: 008343

Duns No. 00-902-8580

M/V "APJ ANAND"

For providing labor, equipment and material to accomplish repairs in accordance with the specifications.

TOTAL AMOUNT DUE THIS INVOICE $ 1,365.00

Final
Called
Net

PAST DUE PAYMENTS SHALL BEAR INTEREST AT THE HIGHEST LAWFUL RATE UNTIL REPAID, NOT TO EXCEED 1½% PER MONTH.

CORRESPONDENCE ADDRESS P.O. BOX 3109 PORTLAND, OREGON 97208 PHONE (503) 285-7557

NWMAR128546

62

NORTHWEST MARINE IRON WORKS

SHIP REPAIRERS
GENERAL MACHINE WORK
ENGINEERING

MAIL PAYMENT TO:
P.O. BOX 4000-58
PORTLAND, OREGON 97208

INVOICE

S/S "ROTTERDAM"
c/o Holland America Line
300 Elliott Avenue West
Seattle, WA 98119

DATE March 30, 1989
OUR JOB NO. 3452
CUSTOMER'S ORDER NO.
CONTRACT NO.
INVOICE NO. 3452B
TERMS Net

CUSTOMER CODE NUMBER: 07203

Duns No. 00-902-8580

S/S "ROTTERDAM"

PROGRESS BILLING NO. 3

Pre-planning and procurement activities	$24,044.20
Labor and Expenses (inspections/specifications)	17,802.00
TOTAL AMOUNT DUE THIS INVOICE	$41,846.20

APPROVED:

J. L. ADRIAANSE
Vice President - Technical

Partial
Collect
Net

PAST DUE PAYMENTS SHALL BEAR INTEREST AT THE HIGHEST LAWFUL RATE UNTIL REPAID, NOT TO EXCEED 1½% PER MONTH.

CORRESPONDENCE ADDRESS P.O. BOX 3109 PORTLAND, OREGON 97208 PHONE (503) 285-7557

NWMAR128547

NORTHWEST MARINE IRON WORKS
INVOICES BY CALLEY

MONTH OF February 1989

CUSTOMER	SHIP	INVOICE DATE	INVOICE NUMBER	INVOICE AMOUNT	INVOICE PAYMENT DATE	COMMISSION PERCENT	COMMISSION AMOUNT	COMMISSION DATE PAID	COMMISSION CHECK NUMBER	
Chantiers De L'Atlantique	Ex-Noordam Nieuw Amsterdam	2/1 ~~3/10~~	3110	1,500.00	3-23-89	10%	150.00	3-24-89	267134	
General Steamship	Pan Noble	2/2	3468	3,481.50	3-8-89	10%	348.15	3-24-89	267134	
Compass Marine	Salus Novis	2/9	3471	9,770.00	3-21-89	10%	977.00	3-24-89	267134	✓
Holland America	Rotterdam	2/9	3452	40,197.00	3-9-89	10%	4,019.70	Rotterdam		pd 2/12/90
General Steamship	M/V Greenwood	2/14	3476	7,399.50	3/24/89	10%	739.95	3/29/89	267136	✓
General Steamship	Princess Diana	2/28	3485-A	258,915.00	3/27/89					
~~General Steamship~~ Nikkai Marine	Princess Diana	2/28	3485-B	45,149.00	~~3/27/89~~					
General Steamship	Princess Diana	2/28	3485-C	12,678.00	3/27/89	10%	27,159.30	3/29/89	267136	
General Steamship	Princess Diana	2/28	3485-D	(45,149.00)	~~3/27/89~~					
International Shipping	M/V Notion	2/28	3475	3,741.00	3/30/89	10%	374.10	4-11-89	267145	✓
	J. Marie	2/27	3477	39,478.00	2/27	10%	3,797.80	~~2/28/07~~ 3/	267125	customer only pd 37,978.00
general Steamship	Pan Oide	2/23	3481	13,473.00	3/20/89	10%	1,347.30	3-24-89	267135	
	Leopard	2/23	3484	11,101.00	3/29/89	10%	1,110.10	4-11-89	267145	✓ w/o $1500 6/20/90

X

NWMAR128548

2

NORTHWEST MARINE IRON WORKS

SHIP REPAIRERS
GENERAL MACHINE WORK
ENGINEERING

MAIL PAYMENT TO:
P.O. BOX 4000-58
PORTLAND, OREGON 97208

INVOICE

Chantiers De L'Atlantique
Alshom-Atlantique
B. P. 400-44608
St. Nazaire, Cedex
FRANCE

DATE	Feb. 1, 1989
OUR JOB NO.	3110
CUSTOMER'S ORDER NO.	
CONTRACT NO.	
INVOICE NO.	3110-Z
TERMS	Net

CUSTOMER CODE NUMBER: 02119

Duns No. 00-902-8580

Warehouse charges for the main engine generator step-up gears, Ex-Noordam and Nieuw Amsterdam.

Charges for the month of February, 1989.

TOTAL AMOUNT DUE THIS INVOICE: $1,500.00

Part. A/
Called
Net

PAST DUE PAYMENTS SHALL BEAR INTEREST AT THE HIGHEST LAWFUL RATE UNTIL REPAID, NOT TO EXCEED 1½% PER MONTH.

CORRESPONDENCE ADDRESS P.O. BOX 3109 PORTLAND, OREGON 97208 PHONE (503) 285-7557

NWMAR128549

NORTHWEST MARINE IRON WORKS

4

SHIP REPAIRERS
GENERAL MACHINE WORK
ENGINEERING

MAIL PAYMENT TO:
P.O. BOX 4000-58
PORTLAND, OREGON 97208

INVOICE

M/V "PAN NOBLE" and Owners
c/o General Steamship Corp
421 S.W. 6th Avenue, Suite 410
Portland, OR 97204

DATE: February 2, 1989
OUR JOB NO.: 3468
CUSTOMER'S ORDER NO.:
CONTRACT NO.:
INVOICE NO.: 3468
TERMS: Net

CUSTOMER CODE NUMBER:

Duns No. 00-902-8580

M/V "PAN NOBLE"

For work performed on the above vessel in accordance with
with the attached specifications.

TOTAL AMOUNT DUE THIS INVOICE $3,481.50

Final
Calley
Net

PAST DUE PAYMENTS SHALL BEAR INTEREST AT THE HIGHEST LAWFUL RATE UNTIL REPAID, NOT TO EXCEED 1½% PER MONTH.

CORRESPONDENCE ADDRESS P.O. BOX 3109 PORTLAND, OREGON 97208 PHONE (503) 285-7557

NWMAR128550

8

NORTHWEST MARINE IRON WORKS

SHIP REPAIRERS
GENERAL MACHINE WORK
ENGINEERING

MAIL PAYMENT TO:
P.O. BOX 4000-58
PORTLAND, OREGON 97208

INVOICE

M/V "SALUS NAVIS" and Owners
c/o Compass Marine
1604 Christianson Road
Seattle, WA 98188

DATE	February 9, 1989
OUR JOB NO.	3471
CUSTOMER'S ORDER NO.	
CONTRACT NO.	
INVOICE NO.	3471
TERMS	Net

CUSTOMER CODE NUMBER: 002545

Duns No. 00-902-8580

M/V "SALUS NAVIS"

For work performed on the above vessel in accordance with
with the attached specifications.

TOTAL AMOUNT DUE THIS INVOICE $9,770.00

Final
Calley
Wel

PAST DUE PAYMENTS SHALL BEAR INTEREST AT THE HIGHEST LAWFUL RATE UNTIL REPAID, NOT TO EXCEED 1½% PER MONTH.

CORRESPONDENCE ADDRESS P.O. BOX 3109 PORTLAND, OREGON 97208 PHONE (503) 285-7557

NWMAR128551

/0

NORTHWEST MARINE IRON WORKS

SHIP REPAIRERS
GENERAL MACHINE WORK
ENGINEERING

MAIL PAYMENT TO:
P.O. BOX 4000-58
PORTLAND, OREGON 97208

INVOICE

S/S "ROTTERDAM" and Owners
c/o Holland America Line
300 Elliott Avenue West
Seattle, WA 98119

DATE	February 9, 1989
OUR JOB NO.	3452
CUSTOMER'S ORDER NO.	
CONTRACT NO.	
INVOICE NO.	3452
TERMS	Net

CUSTOMER CODE NUMBER: 07203-01

Duns No. 00-902-8580

S/S "ROTTERDAM"

PROGRESS BILLING NO. 1

Pre-planning and procurement activities	$27,957.00
Labor and Expenses (inspections/specifications) (to February 16, 1989)	12,240.00
Total Amount Due This Invoice	$40,197.00

APPROVED:

J. L. Adriaanse
Vice President - Technical

Partial
Called
Net

PAST DUE PAYMENTS SHALL BEAR INTEREST AT THE HIGHEST LAWFUL RATE UNTIL REPAID, NOT TO EXCEED 1½% PER MONTH.

CORRESPONDENCE ADDRESS P.O. BOX 3109 PORTLAND, OREGON 97208 PHONE (503) 285-7557

NWMAR128552

15

NORTHWEST MARINE IRON WORKS

SHIP REPAIRERS
GENERAL MACHINE WORK
ENGINEERING

MAIL PAYMENT TO:
P.O. BOX 4000-58
PORTLAND, OREGON 97208

INVOICE

M/V "GREENWOOD" and Owners
c/o General Steamship Corporation
421 S.W. 6th Avenue, Suite 402
Portland, Oregon 97204

DATE February 14, 1989
OUR JOB NO. 3476
CUSTOMER'S ORDER NO.
CONTRACT NO.
INVOICE NO. 3476
TERMS Net

CUSTOMER CODE NUMBER: 006200

Duns No. 00-902-8580

M/V "GREENWOOD"

For labor, material and equipment to accomplish repairs on the above vessel in accordance with the attached specifications.

Total Amount Due $7,399.50

FINAL
Calley
Net

PAST DUE PAYMENTS SHALL BEAR INTEREST AT THE HIGHEST LAWFUL RATE UNTIL REPAID, NOT TO EXCEED 1½% PER MONTH.

CORRESPONDENCE ADDRESS P.O. BOX 3109 PORTLAND, OREGON 97208 PHONE (503) 285-7557

NWMAR128553

29

NORTHWEST MARINE IRON WORKS

SHIP REPAIRERS
GENERAL MACHINE WORK
ENGINEERING

MAIL PAYMENT TO:
P.O. BOX 4000-58
PORTLAND, OREGON 97208

INVOICE

M/V "PRINCESS DIAN" and Owners
NIKKAI Marine Co., Ltd.
c/o General Steamship Co.
421 S.W. Sixth Avenue, Suite 410
Portland, Oregon 97204

DATE	February 28, 1989
OUR JOB NO.	3485-A
CUSTOMER'S ORDER NO.	
CONTRACT NO.	
INVOICE NO.	3485-A
TERMS	Net

CUSTOMER CODE NUMBER: 006200

Duns No. 00-902-8580

M/V "PRINCESS DIAN"

FINAL INVOICE FOR DAMAGE REPAIRS

Furnished labor, materials and equipment to crop and renew damage shell plate and internals, port side, strakes E and F in way of No. 1 and 2 Cargo Holds.

All in accordance with Field Damage Survey conducted on February 21 and February 22, 1989 and agreement reached on February 28, 1989.

Total Price (without overtime premiums and services) $258,915.00

==========

Work performed at Swan Island Berth 302 from 1801 hours on February 21, 1989 to 2157 hours on February 28, 1989.

Net
~~R. Dodge~~
Calley

PAST DUE PAYMENTS SHALL BEAR INTEREST AT THE HIGHEST LAWFUL RATE UNTIL REPAID, NOT TO EXCEED 1½% PER MONTH.

CORRESPONDENCE ADDRESS P.O. BOX 3109 PORTLAND, OREGON 97208 PHONE (503) 285-7557

NWMAR128554

30

NORTHWEST MARINE IRON WORKS

SHIP REPAIRERS
GENERAL MACHINE WORK
ENGINEERING

MAIL PAYMENT TO:
P.O. BOX 4000-58
PORTLAND, OREGON 97208

INVOICE

M/V "PRINCESS DIAN" and Owners
NIKKAI Marine Co., Ltd.
c/o General Steamship Co.
421 S.W. Sixth Avenue, Suite 410
Portland, Oregon 97204

DATE February 28, 1989
OUR JOB NO. 3485-B
CUSTOMER'S ORDER NO.
CONTRACT NO.
INVOICE NO. 3485-B
TERMS Net

CUSTOMER CODE NUMBER: 006200

Duns No. 00-902-8580

M/V "PRINCESS DIAN"

FINAL INVOICE FOR OVERTIME PREMIUMS

Overtime premiums for extended shift hours and two weekend days, all relative to shell damage repairs.

Total Amount $45,149.00

Net
R. Dale Calley

PAST DUE PAYMENTS SHALL BEAR INTEREST AT THE HIGHEST LAWFUL RATE UNTIL REPAID, NOT TO EXCEED 1½% PER MONTH.

CORRESPONDENCE ADDRESS P.O. BOX 3109 PORTLAND, OREGON 97208 PHONE (503) 285-7557

31 ✓

NORTHWEST MARINE IRON WORKS

SHIP REPAIRERS
GENERAL MACHINE WORK
ENGINEERING

INVOICE

MAIL PAYMENT TO:
P.O. BOX 4000-58
PORTLAND, OREGON 97208

M/V "PRINCESS DIAN" and Owners
NIKKAI Marine Co., Ltd.
c/o General Steamship Co.
421 S.W. Sixth Avenue, Suite 410
Portland, Oregon 97204

DATE	February 28, 1989
OUR JOB NO.	3485-C
CUSTOMER'S ORDER NO.	
CONTRACT NO.	
INVOICE NO.	3485-C
TERMS	Net

CUSTOMER CODE NUMBER: 006200

Duns No. 00-902-8580

M/V "PRINCESS DIAN"

FINAL INVOICE FOR BERTHAGE AND SERVICES

Furnished necessary berthage and general services from
1801 hours on Februry 21, 1989 to 2157 hours on February 28, 1989.

1.	Berthage and mechanical services	$ 4,664.00
2.	Breast out floats	2,384.00
3.	General services	5,630.00
	Total Amount	$12,678.00

Net
~~Riddle~~
Calley

PAST DUE PAYMENTS SHALL BEAR INTEREST AT THE HIGHEST LAWFUL RATE UNTIL REPAID, NOT TO EXCEED 1½% PER MONTH

CORRESPONDENCE ADDRESS P.O. BOX 3109 PORTLAND, OREGON 97208 PHONE (503) 285-7557

NWMAR128556

32

NORTHWEST MARINE IRON WORKS

SHIP REPAIRERS
GENERAL MACHINE WORK
ENGINEERING

MAIL PAYMENT TO:
P.O. BOX 4000-58
PORTLAND, OREGON 97208

INVOICE

M/V "PRINCESS DIAN" and Owners
NIKKAI Marine Co., Ltd.
c/o General Steamship Co.
421 S.W. Sixth Avenue, Suite 410
Portland, Oregon 97204

DATE	February 28, 1989
OUR JOB NO.	3485-D
CUSTOMER'S ORDER NO.	
CONTRACT NO.	
INVOICE NO.	3485-D
TERMS	Net

CUSTOMER CODE NUMBER: 006200

Duns No. 00-902-8580

M/V "PRINCESS DIAN"

FOR INTERNAL USE ONLY

TO CANCEL
FINAL INVOICE FOR OVERTIME PREMIUMS

Overtime premiums for extended shift hours and two weekend days, all relative to shell damage repairs.

Total Amount Of Credit ($45,149.00)

Net
Ridd
Calley

PAST DUE PAYMENTS SHALL BEAR INTEREST AT THE HIGHEST LAWFUL RATE UNTIL REPAID, NOT TO EXCEED 1½% PER MONTH.

CORRESPONDENCE ADDRESS P.O. BOX 3109 PORTLAND, OREGON 97208 PHONE (503) 285-7557

NWMAR128557

39

NORTHWEST MARINE IRON WORKS

SHIP REPAIRERS
GENERAL MACHINE WORK
ENGINEERING

MAIL PAYMENT TO:
P.O. BOX 4000-58
PORTLAND, OREGON 97208

INVOICE

M/V "HOTUSU" and Owners
c/o International Shipping
421 S.W. 6th Avenue
Portland, OR 97204

DATE	February 28, 1989
OUR JOB NO.	3475
CUSTOMER'S ORDER NO.	
CONTRACT NO.	
INVOICE NO.	3475
TERMS	Net

CUSTOMER CODE NUMBER: 008520

Duns No. 00-902-8580

M/V "HOTUSU

For furnishing labor, material and equipment to accomplish repairs in accordance with the attached specifications.

Total Amount Due This Invoice $3,741.00

FINAL
Called
Net

PAST DUE PAYMENTS SHALL BEAR INTEREST AT THE HIGHEST LAWFUL RATE UNTIL REPAID, NOT TO EXCEED 1½% PER MONTH.

CORRESPONDENCE ADDRESS P.O. BOX 3109 PORTLAND, OREGON 97208 PHONE (503) 285-7557

NORTHWEST MARINE IRON WORKS
INVOICES BY CALLEY

MONTH OF January 1989

CUSTOMER	SHIP	INVOICE DATE	INVOICE NUMBER	INVOICE AMOUNT	INVOICE PAYMENT DATE	COMMISSION PERCENT	COMMISSION AMOUNT	COMMISSION DATE PAID	COMMISSION CHECK NUMBER	
Chantiers De L'Atlantique	Ex-Noordam Neiuw Amsterdam	1/1/89	3110-Y	1,500.00	3-15-89	10%	150.00	3-24-89	267134	
Interocean Steamship	Cielo Di Venezia	1/13/89	3464	405.00	3-9-89	10%	40.50	3-24-89	267134	
Kerr Steamship	Esperanza	1/26/89	3466	918.32	3-6-89	9.89%	89.83	3-24-89	267134	w/o #20 6/20/90

NWMAR128559

NORTHWEST MARINE IRON WORKS

SHIP REPAIRERS
GENERAL MACHINE WORK
ENGINEERING

MAIL PAYMENT TO:
P.O. BOX 4000-58
PORTLAND, OREGON 97208

INVOICE

Chantiers De L'Atlantique
Alshom-Atlantique
B. P. 400-44608
St. Nazaire, Cedex
FRANCE

DATE	Jan. 1, 1989
OUR JOB NO.	3110
CUSTOMER'S ORDER NO.	
CONTRACT NO.	
INVOICE NO.	3110-Y
TERMS	Net

CUSTOMER CODE NUMBER: 02119

Duns No. 00-902-8580

Warehouse charges for the main engine generator step-up gears, Ex-Noordam and Nieuw Amsterdam.

Charges for the month of January, 1989.

TOTAL AMOUNT DUE THIS INVOICE: $1,500.00

Partial
Calley
Net

PAST DUE PAYMENTS SHALL BEAR INTEREST AT THE HIGHEST LAWFUL RATE UNTIL REPAID, NOT TO EXCEED 1½% PER MONTH.

CORRESPONDENCE ADDRESS P.O. BOX 3109 PORTLAND, OREGON 97208 PHONE (503) 285-7557

NWMAR128560

30

NORTHWEST MARINE IRON WORKS

SHIP REPAIRERS
GENERAL MACHINE WORK
ENGINEERING

MAIL PAYMENT TO:
P.O. BOX 4000-58
PORTLAND, OREGON 97208

INVOICE

M/V "CIELO DI VENEZIA" and Owners
c/o Interocean Steamship Company
Suite 1200 - Alaskan Building
618 2nd Avenue
Seattle, WA 98104

CUSTOMER CODE NUMBER: 008343

DATE	January 13, 1989
OUR JOB NO.	3464
CUSTOMER'S ORDER NO.	
CONTRACT NO.	
INVOICE NO.	3464
TERMS	Net of Invoice

Duns No. 00-902-8580

For furnishing labor, material, and equipment to accomplish service in accordance with the attached specifications.

Total Amount of Invoice $ 405.00
==========

FINAL
CALLED
NEW

PAST DUE PAYMENTS SHALL BEAR INTEREST AT THE HIGHEST LAWFUL RATE UNTIL REPAID, NOT TO EXCEED 1½% PER MONTH.

CORRESPONDENCE ADDRESS P.O. BOX 3109 PORTLAND, OREGON 97208 PHONE (503) 285-7557

NORTHWEST MARINE IRON WORKS

50

SHIP REPAIRERS
GENERAL MACHINE WORK
ENGINEERING

MAIL PAYMENT TO:
P.O. BOX 4000-58
PORTLAND, OREGON 97208

INVOICE

M/V "ESPERANZA #V" AND OWNERS
c/o Kerr Steaamship Company, Inc.
One S.W. Columbia Blvd.
Portland, Oregon 97258

DATE January 26, 1989
OUR JOB NO. 3466
CUSTOMER'S ORDER NO.
CONTRACT NO.
INVOICE NO. 3466
TERMS Net 30

CUSTOMER CODE NUMBER: 009440

Duns No. 00-902-8580

M/V "ESPERANZA #V"

For providing labor, equipment and material to accomplish repairs in accordance with the specifications.

TOTAL AMOUNT DUE THIS INVOICE $918.32

Jim al
Mitchell/Calley
NW

PAST DUE PAYMENTS SHALL BEAR INTEREST AT THE HIGHEST LAWFUL RATE UNTIL REPAID, NOT TO EXCEED 1½% PER MONTH.

CORRESPONDENCE ADDRESS P.O. BOX 3109 PORTLAND, OREGON 97208 PHONE (503) 285-7557

NWMAR128562

NORTHWEST MARINE IRON WORKS
INVOICES BY CALLEY

MONTH OF December 1987

CUSTOMER	SHIP	INVOICE NUMBER	INVOICE AMOUNT	DATE PAYMENT RECEIVED	PERCENT	AMOUNT	DATE PAID	CHECK NUMBER
Chantiers De L'Atlantique	Noordam Nieuw Amsterdam	3110-K	1,500.00	1-27-88	10%	150.00	2-10-88	220612
Barbur Steamship	M/V Pomerac	3257	545.00	2-26-88	10%	54.50	3-21-88	220585
Stars Shipping	Star Gerranger	3255	2,275.00	1-18-88				
Nagesco	Star Gerranger	3252	5,757.00	2-04-88				
Chantiers De L'Atlantiq	Noordam Nieuw Amsterdam	3110-L	1,500.00	2-04-88	10%	150.00	2-10-88	220612
Kerr Steamship	Legent	3261	29,633.00	1-11-88	10%	2,963.30	1-11-88	214713
Cunard Line	Sagafjord	3241	5,985.00	3-18-88	10%	598.50		
Fritz Maritimes	M/V Akritas	3244	1,383.00	2-8-88				
Kerr Steamship	Tomiscsea	3248	1,083.00	2-8-88				
William Diamond	Labor, material & crane service	3265	500.00	3-14-88	10%	50.00	3/21/88	220585
Cunard Line	Sagafjord	3224	1,762,491.60	12-17-87	5%	88,125.00	2-08-88	220610 ★88
Adrick Cooling Corp	Sagafjord	3247	43,154.00	* CANCELED				

NWMAR128563

NORTHWEST MARINE IRON WORKS

SHIP REPAIRERS
GENERAL MACHINE WORK
ENGINEERING

MAIL PAYMENT TO:
P.O. BOX 4000-58
PORTLAND, OREGON 97208

INVOICE

CHANTIERS DE L'ATLANTIQUE
Alshom-Atlantique
B. P. 400-44608
St. Nazaire, Cedex
FRANCE

DATE December 1, 1987
OUR JOB NO. 3110
CUSTOMER'S ORDER NO.
CONTRACT NO.
INVOICE NO. 3110-K
TERMS NET

CUSTOMER CODE NUMBER: 02119

Duns No. 00-902-8580

Warehouse charges for the main engine generator step-up gears, Ex-Noordam and Nieuw Amsterdam.

Charges for the month of November, 1987.

TOTAL AMOUNT DUE THIS INVOICE: $1,500.00
(USD)

PARTIAL
CALLEY
NET

PAST DUE PAYMENTS SHALL BEAR INTEREST AT THE HIGHEST LAWFUL RATE UNTIL REPAID, NOT TO EXCEED 1½% PER MONTH.

CORRESPONDENCE ADDRESS P.O. BOX 3109 PORTLAND, OREGON 97208 PHONE (503) 285-7557

NWMAR128564

NORTHWEST MARINE IRON WORKS

2 ✓

SHIP REPAIRERS
GENERAL MACHINE WORK
ENGINEERING

MAIL PAYMENT TO:
P.O. BOX 4000-58
PORTLAND, OREGON 97208

INVOICE

M/V "Pomerac" and Owners
c/o Barber Steamship Lines
319 S. W. Washington Street
Portland, Oregon 97204

DATE December 14, 1987
OUR JOB NO. 3257
CUSTOMER'S ORDER NO.
CONTRACT NO.
INVOICE NO. 3257
TERMS NET

CUSTOMER CODE NUMBER: 00887

Duns No. 00-902-8580

M/V "POMERAC"

To accomplish repairs and betterments to the subject vessel, as per attached specification No. 1.

TOTAL AMOUNT DUE THIS INVOICE: $545.00

Final Calley NET

PAST DUE PAYMENTS SHALL BEAR INTEREST AT THE HIGHEST LAWFUL RATE UNTIL REPAID, NOT TO EXCEED 1½% PER MONTH.

CORRESPONDENCE ADDRESS P.O. BOX 3109 PORTLAND, OREGON 97208 PHONE (503) 285-7557

NWMAR128565

NORTHWEST MARINE IRON WORKS

22J

SHIP REPAIRERS
GENERAL MACHINE WORK
ENGINEERING

MAIL PAYMENT TO:
P.O. BOX 4000-58
PORTLAND, OREGON 97208

INVOICE

M/V "Star Geiranger" and Owners
c/o Star Shipping Company
Oregon Pioneer Building
Portland, Oregon 97204

DATE December 14, 1987
OUR JOB NO. 3255
CUSTOMER'S ORDER NO.
CONTRACT NO.
INVOICE NO. 3255
TERMS NET

CUSTOMER CODE NUMBER: 28470

Duns No. 00-902-8580

M/V "STAR GEIRANGER"

To accomplish repairs and betterments to the subject vessel, as per attached specification No. 1.

TOTAL AMOUNT DUE THIS INVOICE: $2,275.00

Final Calley NET

PAST DUE PAYMENTS SHALL BEAR INTEREST AT THE HIGHEST LAWFUL RATE UNTIL REPAID, NOT TO EXCEED 1½% PER MONTH.

CORRESPONDENCE ADDRESS P.O. BOX 3109 PORTLAND, OREGON 97208 PHONE (503) 285-7557

NWMAR128566

NORTHWEST MARINE IRON WORKS

23 ✓

SHIP REPAIRERS
GENERAL MACHINE WORK
ENGINEERING

MAIL PAYMENT TO:
P.O. BOX 4000-58
PORTLAND, OREGON 97208

INVOICE

M/V "Star Geiranger" and Owners
c/o Nagesco
961 A West 1st
N. Vancouver B. C., Canada V7P 1A5

DATE December 14, 1987
OUR JOB NO. 3252
CUSTOMER'S ORDER NO.
CONTRACT NO.
INVOICE NO. 3252
TERMS NET

CUSTOMER CODE NUMBER: 14075

Duns No. 00-902-8580

M/V "STAR GEIRANGER"

To accomplish repairs and betterments to the subject vessel, as per attached specifications Nos. 1 through 3.

TOTAL AMOUNT DUE THIS INVOICE: $5,757.00

Final Calley NET

PAST DUE PAYMENTS SHALL BEAR INTEREST AT THE HIGHEST LAWFUL RATE UNTIL REPAID, NOT TO EXCEED 1½% PER MONTH.

CORRESPONDENCE ADDRESS P.O. BOX 3109 PORTLAND, OREGON 97208 PHONE (503) 285-7557

NWMAR128567

NORTHWEST MARINE IRON WORKS

39

SHIP REPAIRERS
GENERAL MACHINE WORK
ENGINEERING

MAIL PAYMENT TO:
P.O. BOX 4000-58
PORTLAND, OREGON 97208

INVOICE

DATE December 31, 1987
OUR JOB NO. 3110
CUSTOMER'S ORDER NO.
CONTRACT NO.
INVOICE NO. 3110-L
TERMS NET

CHANTIERS DE L'ATLANTIQUE
Alshom-Atlantique
B. P. 400-44608
St. Nazaire, Cedex
FRANCE

CUSTOMER CODE NUMBER: 02119

Duns No. 00-902-8580

Warehouse charges for the main engine generator step-up gears, Ex-Noordam and Nieuw Amsterdam.

Charges for the month of December, 1987.

TOTAL AMOUNT DUE THIS INVOICE: $1,500.00

PARTIAL
CALLEY
NET 30

PAST DUE PAYMENTS SHALL BEAR INTEREST AT THE HIGHEST LAWFUL RATE UNTIL REPAID, NOT TO EXCEED 1½% PER MONTH.

CORRESPONDENCE ADDRESS P.O. BOX 3109 PORTLAND, OREGON 97208 PHONE (503) 285-7557

NWMAR128568

NORTHWEST MARINE IRON WORKS

40

SHIP REPAIRERS
GENERAL MACHINE WORK
ENGINEERING

MAIL PAYMENT TO:
P.O. BOX 4000-58
PORTLAND, OREGON 97208

INVOICE

M/V "Regent" and Owners
c/o Kerr Steamship Co., Inc.
One S. W. Columbia, Suite 450
Portland, Oregon 97258

DATE December 18, 1987
OUR JOB NO. 3261
CUSTOMER'S ORDER NO.
CONTRACT NO.
INVOICE NO. 3261
TERMS NET

CUSTOMER CODE NUMBER 09940

Duns No. 00-902-8580

M/V "REGENT"

To accomplish repairs and betterments to the subject vessel, as per attached specifications No. 1 through No. 4.

TOTAL AMOUNT DUE THIS INVOICE: $29,633.00

Final Calley Net 30

PAST DUE PAYMENTS SHALL BEAR INTEREST AT THE HIGHEST LAWFUL RATE UNTIL REPAID, NOT TO EXCEED 1½% PER MONTH.

CORRESPONDENCE ADDRESS P.O. BOX 3109 PORTLAND, OREGON 97208 PHONE (503) 285-7557

NWMAR128569

NORTHWEST MARINE IRON WORKS

SHIP REPAIRERS
GENERAL MACHINE WORK
ENGINEERING

MAIL PAYMENT TO:
P.O. BOX 4000-58
PORTLAND, OREGON 97208

INVOICE

C/V "SAGAFJORD" and Owners
c/o Cunard Line Ltd.
555 - 5th Avenue
New York, New York 10017

Attn: Mr. D. Chominsky

CUSTOMER CODE NUMBER: 02889

DATE: December 18, 1987
OUR JOB NO.: 3241
CUSTOMER'S ORDER NO.: CSD 587
CONTRACT NO.:
INVOICE NO.: 3241
TERMS: Net

Duns No. 00-902-8580

M/V "SAGAFJORD"

ITEM NO. 1 - PROTECTIVE COVERINGS:

Provide labor, material and equipment to furnish the following list of materials.

755 Sheets	-	1/4" x 4' x 8' Plywood
50 Pounds	-	#2 Common Nails
30 Rolls	-	28" x 50' Burlap Cloth
10 Rolls	-	40" x 50' Burlap Cloth

All materials are to be delivered to the vessel on or before December 4, 1987 in Long Beach, California in care of: Williams Dimond & Company
Attention: Mr. Peter Pallas
Phone: (213) 436-8151

TOTAL AMOUNT DUE THIS INVOICE: $5,985.00

FINAL CALLEY NET 30

PAST DUE PAYMENTS SHALL BEAR INTEREST AT THE HIGHEST LAWFUL RATE UNTIL REPAID, NOT TO EXCEED 1½% PER MONTH.

CORRESPONDENCE ADDRESS P.O. BOX 3109 PORTLAND, OREGON 97208 PHONE (503) 285-7557

NWMAR128570

45

NORTHWEST MARINE IRON WORKS

SHIP REPAIRERS
GENERAL MACHINE WORK
ENGINEERING

MAIL PAYMENT TO:
P.O. BOX 4000-58
PORTLAND, OREGON 97208

INVOICE

M/V AKRITIAS
C/O Fritz Maritime Agencies, Inc.
P.O. Box 2964
Portland, OR 97024

DATE 12/18/87
OUR JOB NO. 3244
CUSTOMER'S ORDER NO. Verbal
CONTRACT NO.
INVOICE NO. 3244
TERMS Net 30

CUSTOMER CODE NUMBER: 005065

Duns No. 00-902-8580

FOR REPAIRS TO THE M/V AKRITIAS ON NOVEMBER 17, 1987 WHILE VESSEL BERTHED AT TERMINAL #4, BERTH 414, Portland, OR IN ACCORDANCE WITH ATTACHED SPECIFICATIONS.

S.T. LABOR:	36 Hours @ $35.00 Hr.	=	$1,260.00
O.T. LABOR:	1 Hour @ $52.00 Hr.	=	52.00
MATERIAL:	$55.00 + 15%	=	63.00
MILEAGE:		=	8.00

TOTAL AMOUNT DUE THIS INVOICE $1,383.00

Lathel Calley
Net 30

PAST DUE PAYMENTS SHALL BEAR INTEREST AT THE HIGHEST LAWFUL RATE UNTIL REPAID, NOT TO EXCEED 1½% PER MONTH.

CORRESPONDENCE ADDRESS P.O. BOX 3109 PORTLAND, OREGON 97208 PHONE (503) 285-7557

NWMAR128571

NORTHWEST MARINE IRON WORKS

46

SHIP REPAIRERS
GENERAL MACHINE WORK
ENGINEERING

MAIL PAYMENT TO:
P.O. BOX 4000-58
PORTLAND, OREGON 97208

INVOICE

S. S. "TOMISCSEA" AND OWNER
c/o Kerr Steamship Company, Inc.
1 S.W. Columbia, Suite 450
Portland, Oregon 97258
Attn: Peter Rennett

DATE	December 18, 1987
OUR JOB NO.	3248
CUSTOMER'S ORDER NO.	Verbal
CONTRACT NO.	
INVOICE NO.	3248
TERMS	Net 30

CUSTOMER CODE NUMBER:

Duns No. 00-902-8580

S.S. "TOMISCSEA"

FOR SERVICES RENDERED IN ACCORDANCE WITH ATTACHED SPECIFICATION:

Labor:	14 Hrs. Premium Time	@ $52.00 per hour	$ 728.00
Equipment Rental:			$ 355.00
			$1,083.00

Partial
Calley
Net 30

PAST DUE PAYMENTS SHALL BEAR INTEREST AT THE HIGHEST LAWFUL RATE UNTIL REPAID, NOT TO EXCEED 1½% PER MONTH.

CORRESPONDENCE ADDRESS P.O. BOX 3109 PORTLAND, OREGON 97208 PHONE (503) 285-7557

NWMAR128572

NORTHWEST MARINE IRON WORKS

54

SHIP REPAIRERS
GENERAL MACHINE WORK
ENGINEERING

MAIL PAYMENT TO:
P.O. BOX 4000-58
PORTLAND, OREGON 97208

INVOICE

Williams Diamond Co.
200 Market Street, Suite 1480
Portland, OR 97201
Attn: Poncho Hernandez

DATE December 22, 1987
OUR JOB NO. 3265
CUSTOMER'S ORDER NO. Verbal
CONTRACT NO.
INVOICE NO. 3265
TERMS Net

CUSTOMER CODE NUMBER: 034400

Duns No. 00-902-8580

FINAL

Provide labor, material and crane service to rig and lift a forty (40') foot refrigerator container and place onto an Owner furnished trailer as directed by Agent.

TOTAL AMOUNT DUE THIS INVOICE: $500.00

Final
Calley
Net

PAST DUE PAYMENTS SHALL BEAR INTEREST AT THE HIGHEST LAWFUL RATE UNTIL REPAID, NOT TO EXCEED 1½% PER MONTH.

CORRESPONDENCE ADDRESS P.O. BOX 3109 PORTLAND, OREGON 97208 PHONE (503) 285-7557

NWMAR128573

NORTHWEST MARINE IRON WORKS

SHIP REPAIRERS
GENERAL MACHINE WORK
ENGINEERING

MAIL PAYMENT TO:
P.O. BOX 4000-58
PORTLAND, OREGON 97208

INVOICE

C/V "Sagafjord" & Owners
Cunard Line, Ltd.
555 5th Avenue
New York, N Y 10017
Attn: Mr. K. Norvik, Vice President
Technical Operations/NAC

CUSTOMER CODE NUMBER: 002889

DATE December 23, 1987
OUR JOB NO. 3224
CUSTOMER'S ORDER NO. Verbal
CONTRACT NO.
INVOICE NO. 3224
TERMS

Duns No. 00-902-8580

PARITIAL BILLING

Ninety percent (90%) of contract price per Article 4 of contract.

TOTAL AMOUNT DUE THIS INVOICE: $1,762,491.60

CALLEY PARTIAL NET

PAYMENT RECEIVED
WIRED 12-17-87
$1,762,491.60

PAST DUE PAYMENTS SHALL BEAR INTEREST AT THE HIGHEST LAWFUL RATE UNTIL REPAID, NOT TO EXCEED 1½% PER MONTH.

CORRESPONDENCE ADDRESS P.O. BOX 3109 PORTLAND, OREGON 97208 PHONE (503) 285-7557

NWMAR128574

63

NORTHWEST MARINE IRON WORKS

SHIP REPAIRERS
GENERAL MACHINE WORK
ENGINEERING

MAIL PAYMENT TO:
P.O. BOX 4000-58
PORTLAND, OREGON 97208

INVOICE

Adrick Cooling Corporation
320 Cantor Avenue
Linden, New Jersey 07036

DATE: December 28, 1987
OUR JOB NO.: 3247
CUSTOMER'S ORDER NO.: Verbal
CONTRACT NO.:
INVOICE NO.: 3247
TERMS: Net 30 days

CUSTOMER CODE NUMBER: 000080

Duns No. 00-902-8580

1

FINAL
M/V 'SAGAFJORD

For providing labor, materials and equipment to accomplish repairs aboard the vessel as listed herein:

Item No.	2028	Fan Room No. 1 Upper	$	4,669.00
	2028A	Top Plate		1,968.00
	2029	Fan Room No. 2		4,744.00
	2031	Fan Room No. 3 Lower		1,314.00
	2031A	(A) 6" x 16' Long Ducts		6,304.00
	2031B	(A) Balance 498.00 Repairs		1,495.00
	2031B	(B) (2) Add Ducts to Relocate Fan		1,660.00
	2033			Cancelled
	2036	Fan Room No. 8		8,089.00
	2037	Transition Piece		1,434.00
	2040	Fan Room No. 20		9,661.00
	2041	Fan Room No. 15		1,816.00
	TOTAL AMOUNT THIS INVOICE			**$43,154.00**

Final Called Net 30

PAST DUE PAYMENTS SHALL BEAR INTEREST AT THE HIGHEST LAWFUL RATE UNTIL REPAID, NOT TO EXCEED 1½% PER MONTH.

CORRESPONDENCE ADDRESS P.O. BOX 3109 PORTLAND, OREGON 97208 PHONE (503) 285-7557

NWMAR128575

NORTHWEST MARINE IRON WORKS
INVOICES BY CALLEY

MONTH OF November 1987

CUSTOMER	SHIP	INVOICE NUMBER	INVOICE AMOUNT	DATE PAYMENT RECEIVED	PERCENT	AMOUNT	DATE PAID	CHECK NUMBER
Cascade Shipping	Luna II	3236	672.00	6-16-88	10%	67.20	7-15-88	220565
Chantiers De L'Atlantique	Noordam Neerlis Amsterdam	3110-J	1,500.00	1/5/88	10%	150.00	1-8-88	214704 * 88
Transpacific Transportation	M/V Adele	3237	2,660.00	1/8/88				
General Steamship Co.	M/V Dan Noble	3243	2,358.00	1/8/88	10%	235.80	2-10-88	220612
Transpacific Transportation	Gerrard Pacific Purcell	3246	4,965.80	1/8/88	10%	496.58	2-10-88	220612

NWMAR128576

BC

5.J

NORTHWEST MARINE IRON WORKS

SHIP REPAIRERS
GENERAL MACHINE WORK
ENGINEERING

MAIL PAYMENT TO:
P.O. BOX 4000-58
PORTLAND, OREGON 97208

INVOICE

M/V "LUNA II" AND OWNERS
c/o Cascade Shipping Company
806 S.W. Broadway - Suite 550
Portland, Oregon 97205

DATE	November 4, 1987
OUR JOB NO.	3236
CUSTOMER'S ORDER NO.	
CONTRACT NO.	
INVOICE NO.	3236
TERMS	Net

CUSTOMER CODE NUMBER: 01948

Duns No. 00-902-8580

M/V "LUNA II"

TO ACCOMPLISH REPAIRS AND BETTERMENTS TO THE SUBJECT VESSEL,

PER ATTACHED SPECIFICATIONS NO. 1 AND 2.

TOTAL AMOUNT DUE THIS INVOICE: $672.00

Final Calley Net

PAST DUE PAYMENTS SHALL BEAR INTEREST AT THE HIGHEST LAWFUL RATE UNTIL REPAID, NOT TO EXCEED 1½% PER MONTH

CORRESPONDENCE ADDRESS, P.O. BOX 3109, PORTLAND, OREGON 97208, PHONE (503) 285-7557

NWMAR128577

NORTHWEST MARINE IRON WORKS

SHIP REPAIRERS
GENERAL MACHINE WORK
ENGINEERING

MAIL PAYMENT TO:
P.O. BOX 4000-58
PORTLAND, OREGON 97208

INVOICE

CHANTIERS DE L'ATLANTIQUE
Alshom-Atlantique
B.P. 400-44608
St. Nazaire, Cedex
FRANCE

DATE November 4, 1987
OUR JOB NO. 3110
CUSTOMER'S ORDER NO.
CONTRACT NO.
INVOICE NO. 3110-J
TERMS Net

CUSTOMER CODE NUMBER: 02119

Duns No. 00-902-8580

WAREHOUSE CHARGES FOR THE MAIN ENGINE GENERATOR STEP-UP GEARS, EX-NOORDAM AND NIEUW AMSTERDAM.

CHARGES FOR THE MONTH OF OCTOBER, 1987.

TOTAL AMOUNT DUE THIS INVOICE: $1,500.00
(USD)

Partial
Calley
Net

PAST DUE PAYMENTS SHALL BEAR INTEREST AT THE HIGHEST LAWFUL RATE UNTIL REPAID, NOT TO EXCEED 1½% PER MONTH.

CORRESPONDENCE ADDRESS P.O. BOX 3109 PORTLAND, OREGON 97208 PHONE (503) 285-7557

NWMAR128578

36

NORTHWEST MARINE IRON WORKS

SHIP REPAIRERS
GENERAL MACHINE WORK
ENGINEERING

MAIL PAYMENT TO:
P.O. BOX 4000-58
PORTLAND, OREGON 97208

INVOICE

M/V "ADELE" AND OWNERS
c/o Transpacific Transportation Company
200 Market Bldg. - Suite 1470
Portland, Oregon 97205

DATE November 10, 1987
OUR JOB NO. 3237
CUSTOMER'S ORDER NO.
CONTRACT NO.
INVOICE NO. 3237
TERMS Net

CUSTOMER CODE NUMBER: 30778

Duns No. 00-902-8580

M/V "ADELE"

TO ACCOMPLISH REPAIRS AND BETTERMENTS TO THE SUBJECT VESSEL,

PER ATTACHED SPECIFICATIONS.

TOTAL AMOUNT DUE THIS INVOICE: $2,660.00

Final
Called
Net

PAST DUE PAYMENTS SHALL BEAR INTEREST AT THE HIGHEST LAWFUL RATE UNTIL REPAID, NOT TO EXCEED 1½% PER MONTH.

CORRESPONDENCE ADDRESS: P.O. BOX 3100, PORTLAND, OREGON 97208, PHONE (503) 285-7557

NWMAR128579

BC

41. ✓

NORTHWEST MARINE IRON WORKS

SHIP REPAIRERS
GENERAL MACHINE WORK
ENGINEERING

MAIL PAYMENT TO:
P.O. BOX 4000-58
PORTLAND, OREGON 97208

INVOICE

M/V "PAN NOBLE" and Owners
c/o General Steamship Company
421 S. W. 6th Avenue
Suite 410
Portland, OR 97204

DATE November 19. 1987
OUR JOB NO. 3243
CUSTOMER'S ORDER NO.
CONTRACT NO.
INVOICE NO. 3243
TERMS NET

CUSTOMER CODE NUMBER: 06200

Duns No. 00-902-8580

M/V PAN NOBLE

To accomplish repairs and betterments to the subject vessel, as per attached Specifications No. 1 through 5.

TOTAL AMOUNT DUE THIS INVOICE: $2,358.00

FINAL CALLEY NET

PAST DUE PAYMENTS SHALL BEAR INTEREST AT THE HIGHEST LAWFUL RATE UNTIL REPAID, NOT TO EXCEED 1½% PER MONTH.

CORRESPONDENCE ADDRESS P.O. BOX 3109 PORTLAND, OREGON 97208 PHONE (503) 285-7557

NWMAR128580

NORTHWEST MARINE IRON WORKS

SHIP REPAIRERS
GENERAL MACHINE WORK
ENGINEERING

MAIL PAYMENT TO:
P.O. BOX 4000-58
PORTLAND, OREGON 97208

INVOICE

M/V "Gerrard Patrick Purcell" and Owners
c/o Transpacific Transportation Co.
200 Market Bldg.
Suite 1470
Portland, OR 97201

CUSTOMER CODE NUMBER: ~~30788~~ 30778

DATE November 30, 1987
OUR JOB NO. 3246
CUSTOMER'S ORDER NO.
CONTRACT NO.
INVOICE NO. 3246
TERMS NET

Duns No. 00-902-8580

M/V GERRARD PATRICK PURCELL

To accomplish repairs and betterments to the subject vessel, as per attached Specifications No. 1 through No. 7.

TOTAL AMOUNT DUE THIS INVOICE: $4,965.80

FINAL
CALLEY
NET

PAST DUE PAYMENTS SHALL BEAR INTEREST AT THE HIGHEST LAWFUL RATE UNTIL REPAID; NOT TO EXCEED 1½% PER MONTH.

CORRESPONDENCE ADDRESS P.O. BOX 3109 PORTLAND, OREGON 97208 PHONE (503) 285-7557

NWMAR128581

MARINE DIVISION
NORTHWEST MARINE IRON WORKS

MAILING ADDRESS: P.O. BOX 3109
PORTLAND, OR 97208
LOCATION: PORTLAND SHIP REPAIR YARD
5555 N. CHANNEL AVE., BLDG. 2
PORTLAND, OREGON 97217
PHONE: (503) 285-7557
TWX: 910-464-6107 NORMARINE PTL

August 31, 1983

Defense Contract Audit Agency
San Francisco Region
Seattle Branch Office
815 Airport Way South, Room 411
Seattle, Washington 98134

Attention: Mr. Kent D. Godfrey

Subject: Fiscal 1983 Overhead Rate Audit

Dear Kent:

I have received your letter dated August 24, 1983, regarding the Fiscal 1983 Overhead Rate Audit.

I anticipate that we will submit the requested data on or around September 16, 1983. This submission has been delayed, as expected, due to the time necessary for our independent accountants to complete their normal year-end audit.

We, along with SUPSHIP Seattle, are anxious to close the USS "HENRY B. WILSON" contract, and we intend to move quickly to accomplish this objective. Please contact me to make arrangements for the audit.

Very truly yours,

Bruce A. Dummer

Bruce A. Dummer
Controller

BAD/sw

cc: Ms. Margaret Falzone, DCAA Portland Suboffice
Mr. Ron Beil, SUPSHIP Seattle

MARINE DIVISION
NORTHWEST MARINE IRON WORKS

MAILING ADDRESS: P.O. BOX 3109
PORTLAND, OR 97208
LOCATION: PORTLAND SHIP REPAIR YARD
5555 N. CHANNEL AVE., BLDG. 2
PORTLAND, OREGON 97217
PHONE: (503) 285-7557
TWX: 910-464-6107 NORMARINE PTL

September 22, 1983

Defense Contract Audit Agency
San Francisco Region
Seattle Branch Office
815 Airport Way South, Room 411
Seattle, Washington 98134

Attention: Mr. Kent D. Godfrey

Subject: Fiscal 1983 Overhead Rate Audit

Dear Kent:

Enclosed is the Fiscal 1983 overhead and related information you requested in your letter dated August 24, 1983.

Also enclosed is a "USS HENRY B. WILSON (DDG-7)" contract cost summary which spans three fiscal years. It has been prepared under the assumption that our Fiscal 1983 overhead rates will also be applied to the minor "USS HENRY B. WILSON (DDG-7)" contract direct costs which occurred in Fiscal 1982 and Fiscal 1984.

Hopefully this will contribute to a quick closure of the contract. Please contact me to make arrangements for the audit of the information mentioned above.

Very truly yours,

Bruce A. Dummer

Bruce A. Dummer
Controller

BAD/cm
Encl.

cc: Without enclosures
George Luckey
Bill McCauley
Mr. Ron Beil, SupShip Seattle
Ms. Margaret Falzone, DCAA Portland Suboffice

Northwest Marine

U.S.S. WILSON (DDG-7) Contract Cost and Fee Summary, No. N00024-82-C-8503

page 1 of 1

Prepared By	Initials	Date
Approved By		

	Fiscal 1982	Fiscal 1983	Fiscal 1984	Total
Direct Labor:				
Marine Production	319907	11582713	11779	11914399
Shop Production	3790	509012	–	512802
Marine QA+Testing (Craft 21)	9414	1110581	1114	1121109
Marine Contract Admin (Craft 23)	43501	242962	6241	292704
Marine Technical Doc (Craft 25)	11465	51862	366	63693
	388077	12497130	19500	12904707
Direct Material	258771	4126767	2411	4387949
Subcontractors	483427	12570251	471131	13524809
Overhead:				
Marine Production	153498	5557626	5652	5716776
Marine Fringe Benefits	150184	5437653	5530	5593367
Marine Purchasing	14861	124507	216	139584
Marine Warehouse	5028	105368	–	110396
Marine Computer	25011	82717	16791	124519
Marine QA + Testing	8954	105177	1060	115191
Marine Contract Admin	18478	103202	2651	124331
Marine Technical Documents	10155	45935	324	56414
Shop Production	5447	731558	–	737005
Shop Fringe Benefits	1221	163967	–	165188
	392837	12457710	32224	12882771
G+A:				
Marine	116759	3106615	40544	3263918
Shop	2947	395877	–	398824
	119706	3502492	40544	3662742
Total Costs	1642818	45154350	565810	47362978
Fixed Fee				2098944
Total Price				49461922
Facilities Cost of Money (memo only):				
Amounts in Overhead above	30260	1054079	1211	1085550
Amounts in G+A above	8682	237452	2994	249128
	38942	1291531	4205	1334678

4907 BUFF - 8907 GREEN - 4207 WHITE

NWMAR128584

Northwest Marine

USS. WILSON (DDG-7) No. N00024-82-C-8503 Reconciliation of Billed Costs to Incurred Costs

Prepared By	Initials	Date
Approved By		

	Costs Incurred				Costs Billed ①			Difference
	Base Amount	Rate	Costs		Base Amount	Rate ②	Costs	
Direct Labor:								
Marine Production			11914399				11914197	202
Shop Production			512802				512803	< 1 >
Marine QA + Testing			121109				121109	—
Marine Contract Admin			292704				292705	< 1 >
Marine Technical Documents			63693				63693	—
			12904707				12904507	200
Direct Material			4387949	17912758			4382433	5516
Subcontractors			13524809				13468518	56291
Overhead:								
Marine Production	11914399	47.982071 %	5716776		11914197	33.73 %	4018659	1698117
Marine Fringe Benefits	11914399	46.946279 %	5593367		11914197	40.00 %	4765679	827688
Marine Purchasing	3231	$43.201754	139584		3231	$36.12	116704	22880
Marine Warehouse	18620	$5.928903	110396		18622	$8.32	154935	< 44539 >
Marine Computer	40.0595	$3108.34	124519		39.7	$2577	102307	22212
Marine QA and Testing	121109	95.113161 %	115191		121109	123.44 %	149497	< 34306 >
Marine Contract Admin	292704	42.476503 %	124331		292705	131.98 %	386312	< 261981 >
Marine Technical Documents	63693	88.572115 %	56414		63693	121.88 %	77629	< 21215 >
Shop Production	512802	143.721104 %	737005		512803	92.28 %	473215	263790
Shop Fringe Benefits	512802	32.212708 %	165188		512803	35.00 %	179481	< 14293 >
			12882771				10424418	2458353

continued

4910 BUFF · 8910 GREEN · 4210 WHITE

Northwest Marine

U.S.S. WILSON (DDG-7) No. N00024-82-C-8503 Reconciliation of Billed Costs to Incurred Costs

	Initials	Date
Prepared By		
Approved By		

	Costs Incurred			Costs Billed			Difference
continued	Base Amount	Rate	Costs	Base Amount	Rate	Costs	
G+A:							
Marine	42285241	7.718813 %	3263918	40014377	7.00 %	2801006	462912
Shop	512802	77.773534 %	398824	512803	71.48 %	366552	32272
			3662742			3167558	495184
Total Costs			47362978			44347434	3015544
Fixed Fee			2098944			2048674	50270
Total Price			49461922			46396108	3065814

① Includes billings thru Voucher 32 dated August 31, 1983.

② All billing rates were used during the entire period of the contract.

4910 BUFF · 8910 GREEN · 4210 WHITE

NWMAR128586

Northwest Marine
Contract Costs Summary
Fiscal 1983

Prepared By	Initials	Date
Approved By		

	① U.S.S. WILSON Contract	Commercial Contracts	Total
Direct Labor:			
Marine Production	11582713	7031073	18613786
Shop Production	509012	603819	1112831
Marine QA and Testing (Craft 21)	110581	11372	121953
Marine Contract Admin (Craft 23)	242962	92560	335522
Marine Technical Documents (Craft 25)	51862	6681	58543
	12497130	7745505	20242635
Direct Material	4126767	876388	2546406
Subcontractors	12570251		
Overhead:			
Marine Production	5557626	3373654	8931280
Marine Fringe Benefits	5437653	3300827	8738480
Marine Purchasing	124507	87268	211775
Marine Warehouse	105368	130715	236083
Marine Computer	82717	–	82717
Marine QA and Testing	105177	10816	115993
Marine Contract Admin	103202	39316	142518
Marine Technical Documents	45935	5918	51853
Shop Production	731558	867815	1599373
Shop Fringe Benefits	163967	194506	358473
	12457710	8010835	20468545
G+A:			
Marine	3106615	1764026	4870641
Shop	395877	469611	865488
	3502492	2233637	5736129
Total Costs	45154350	26753365	71907715
Facilities Capital Cost of Money (memo only):			
Amounts included in Overhead above	1054079	702969	1757048
Amounts included in G+A above	237452	139805	377257
	1291531	842774	2134305

① CAS covered Cost Plus Fixed Fee Contract number N00024-82-C-8503.

4907 BUFF - 8907 GREEN - 4207 WHITE

NWMAR128587

Northwest Marine Iron Works
Overhead Rate Summary
June 1982 - May 1983

Prepared By	Initials	Date
Approved By		

Pool	Costs	Base	Rate	To G&A Base	To G&A Costs	To Wilson Base	To Wilson Costs	To Commercial Base	To Commercial Costs
SHOP DIVISION									
Manufacturing Overhead	1599373	1112831	143.7211104%			509012	731558	603819	867815
Fringe Benefits Overhead	358473	1112831	32.2127708%			509012	163967	603819	194506
	1957846						895525		1062321
MARINE DIVISION									
Manufacturing Overhead	8931280	18613786	47.9820719%			11582713	5557626	7031073	3373654
Fringe Benefits Overhead	8738480	18613786	46.9462799%			11582713	5437653	7031073	3300827
Purchasing Overhead	211775	4902	43.201754			2882	124507	2020	87268
Warehouse Overhead	236083	39819	5.928903			17772	105368	22047	130715
Computer Overhead	310834	100	3108.3400	73.3886	228117	26.6114	82717		
QA & Testing Labor					3179				
QA & Testing Overhead	119017	125132	95.1131161%	3179	3024	110581	105177	11372	10816
Contract Admin Labor					154855				
Contract Admin Overhead	208295	490377	42.476503%	154855	65777	242962	103202	92560	39316
Technical Documents Labor					8031				
Technical Documents Overhead	58966	66574	88.572115%	8031	7113	51862	45935	6681	5918
	18814730				470096		11562185		6948514

4912½ BUFF · 8912½ GREEN · 4212½ WHITE

NWMAR128588

Northwest Marine Iron Works
G & A Rate Summary
June 1982 - May 1983

Prepared By	Initials	Date
Approved By		

	Costs	Base	Rate	To Wilson Base	To Wilson Costs	To Commercial Base	To Commercial Costs
SHOP G&A	865488	1112831	77.7735349%	509012	395877	603819	469611
MARINE G&A							
Costs from G&A Pools	4400545						
Costs from Overhead Pools	470096						
	4870641						
Base Amounts - Hourly Direct Labor		18613786		11582713		7031073	
Salary Direct Labor		516018		405405		110613	
Direct Mileage, Purchases, Stores		25460406		16697018		8763388	
Overhead		18510699		11562185		6948514	
		63100909	.07718813	40247321	3106615	22853588	1764026

Northwest Marine Iron Works
Overhead Rate Summary
Fiscal 1982

	Initials	Date
Prepared By		
Approved By		

Fiscal 1983

Pool	Costs	Base	Rate	To G&A Base	To G&A Costs	To Wilson Base	To Wilson Costs	To Commercial Base	To Commercial Costs
SHOP DIVISION									
Manufacturing Overhead	260173	181026	143.721104%			3790	5447	177236	254726
Fringe Benefits Overhead	58313	181026	32.212708%			3790	1221	177236	57092
	318486						6668		311818
MARINE DIVISION									
Manufacturing Overhead	2787510	5809482	47.982071%			319907	153498	5489575	2634012
Fringe Benefits Overhead	2727335	5809482	46.946279%			319907	150184	5489575	2577151
Purchasing Overhead	65407	1514	43.201754			344	14861	1170	50546
Warehouse Overhead	16625	2804	5.928903			848	5028	1956	11597
Computer Overhead	51806	16.6667	3108.3400	8.6204	26795	8.0463	25011		
Q.A. & Testing Labor									
Q.A. & Testing Overhead	16908	17777	95.113161%	440	418	9414	8954	7923	7536
Contract Admin Labor									
Contract Admin Overhead	48371	113876	42.476503%	13692	5816	43501	18478	56683	24077
Technical Documents Labor									
Technical Documents Overhead	15238	17204	88.572115%	1976	1750	11465	10155	3763	3333
	5729200				34779		386169		5308252

NWMAR128590

Northwest Marine Iron Works
G & A Rate Summary
Fiscal 1982

Prepared By	Initials	Date
Approved By		

Fiscal 1983

	Costs	Base	Rate	To Wilson Base	To Wilson Costs	To Commercial Base	To Commercial Costs
SHOP G & A	140790	1810260	7.7773534%	3790	2947	177236	137843
MARINE G & A							
Costs from G & A Pool							
Costs from Overhead Pools							
	1314596						
Base Amounts - Hourly Direct Labor		5809482		319907		5489575	
Salary Direct Labor		132749		64380		68369	
Direct Mileage, Purchases, & Stores		5394408		742198		4652210	
Overhead		5694421		386169		5308252	
		17031060	.07718813	1512654	116759	15518406	1197837

49-12% BLUE - 50-12% GREEN - 42-12% WHITE

Northwest Marine Iron Works
Overhead Rate Summary
Fiscal 1984

	Initials	Date
Prepared By		
Approved By		

Pool	1	2	3	4 Costs	5 Base	Fiscal 1983 Rate	7 To G&A Base	8 To G&A Costs	9 To Wilson Base	10 To Wilson Costs	11 To Commercial Base	12 To Commercial Costs
SHOP DIVISION												
Manufacturing Overhead				123041	856111	143.721104%			–	–	856111	123041
Fringe Benefits Overhead				27578	856111	32.212708%			–	–	856111	27578
				150619						–		150619
MARINE DIVISION												
Manufacturing Overhead				988973	2061130	47.982071%			11779	5652	2049351	983321
Fringe Benefits Overhead				967624	2061130	46.946279%			11779	5530	2049351	962094
Purchasing Overhead				19830	459	43.201754			5	216	454	19614
Warehouse Overhead				–	–	5.928903			–	–	–	–
Computer Overhead				51806	16.6667	3108.3400	11.2649	35015	5.4018	16791		
QA & Testing Labor												
QA & Testing Overhead				1600	1682	95.113161%	–	–	1114	1060	568	540
Contract Admin Labor												
Contract Admin Overhead				31189	73426	42.476503%	39415	16742	6241	2651	27770	11796
Technical Documents Labor												
Technical Documents Overhead				2159	2438	88.572115%	1064	942	366	324	1008	893
				2063181				52699		32224		1978258

Northwest Marine Iron Works
G & A Rate Summary
Fiscal 1984

	Initials	Date
Prepared By		
Approved By		

Fiscal 1983

	Costs	Base	Rate	To Wilson Base	To Wilson Costs	To Commercial Base	To Commercial Costs
Shop G & A	66583	856111	7.7773534%	–	–	856111	66583
Marine G & A							
Costs from G & A Pool							
Costs from Overhead Pools	479684						
Base Amounts - Hourly Direct Labor		2061130		11779		2049351	
Salary Direct Labor		37067		7721		29346	
Direct Mileage, Purchases, & Stores		2105796		473542		1632254	
Overhead		2010482		32224		1978258	
		6214475	.07718813	525266	40544	5689209	439140

NORTHWEST MARINE IRON WORKS

Shop Division - Overhead — June 1982 - May 1983 — Page 1 of 1

	Initials	Date
Prepared By		
Approved By		

	1 Total	2 Manufacturing	3 Adjustment
Salaries - Production	21543630	21543630	
Severance Pay	574851 0	574851 0	
Craft Wages	15407690	15407690	
Payroll Taxes	5988319	5988319	
Maintenance	13889705	13889705	
Small Tools	10746654	10746654	
Rent	334275	334275	
Auto & Truck	3471769	3471769	
Trvl & Business Mtgs	20000	20000	
Utilities	10639532	10639532	
Depreciation	22130648	22130648	
Insurance	1964434	1964434	
Outside Labor & Services	–	–	
Safety	230895	230895	
Group Insurance	2280633	2280633	
Property Taxes & Licenses	9569439	9054739	514700
Education & Training	13000	13000	
Miscellaneous	368368	368368	
General Ledger Total	124347501	123832801	514700
Misc (Inc) Expense	(380000)	(380000)	
Bonus	–		
Auto Bonus	–		
	123967501	123452801	514700
Usage Charge	146907	146907	
Cost of Capital	231598	231598	
Sale & Leaseback-Skoda	(13660)	(13660)	
	160452001	159937301	514700

4912¼ BUFF · 8912¼ GREEN · 4212¼ WHITE

NWMAR128594

NORTHWEST MARINE IRON WORKS

Shop Division - Payroll Taxes JUNE 1982 - MAY 1983 PAGE 1 of 1

	Initials	Date
Prepared By		
Approved By		

	1	2	3
	Total	Fringe Benefits	Adjustment
Holiday Pay	4243944	4243944	
Vacation Pay	4496177	4496177	
Worker's Compensation	3221043	3221043	
State Unemployment	1824197	1824197	
Federal Unemployment	238933	238933	
F.I.C.A.	7041249	7041249	
Health & Welfare	9005945	9005945	
Union Pensions & Benefits	5097043	5097043	
Tri-Met Tax	678809	678809	
General Ledger Total	35847340	35847340	+

NWMAR128595

NORTHWEST MARINE IRON WORKS

Shop Division - Sales Expense — June 1982 - May 1983 — Page 1 of 1

	Initials	Date
Prepared By		
Approved By		

	1 Total	2 G & A	3 Adjustment	4 Unallowable
Salaries - Sales	6035084	6035084		
Trvl & Business Meetings	797133	797133		
Payroll Taxes & Benefits	1164463	1164463		
Severance Pay	27650	27650		
Auto	637940	637940		
Advertising & Public Relations	1737687	1737687		
Bad Debts	(1346611)			(1346611)
Miscellaneous	2556	2556		
General Ledger Total	9055902	10402513	-	(1346611)
Misc (Inc) Expense	(69289)	(69289)		
Bonus	-			
Auto Bonus	74784	74784		
	9061397	10408008	+	(1346611)

NORTHWEST MARINE IRON WORKS

Shop Division - Administrative Expense — June 1982 - May 1983 — Page 1 of 1

Prepared By	Initials	Date
Approved By		

	1 Total	2 G & A	3 Adjustment	4 Unallowable
Salaries - G & A	23301854	23301854		
Salaries - Eng. & Est.	11323034	11323034		
Payroll Taxes & Benefits	4179877	4179877		
Group Insurance	3182162	3182162		
Office Supplies & Postage	1050125	1050125		
Outside Labor & Service	-	-		
Dues & Subscriptions	83545	83545		
Education & Training	2590	2590		
Professional Fees	2165384	2165384		
Trvl & Business Meetings	557848	557848		
Telephone	4276272	4276272		
Auto Expense	1136718	1136718		
Contributions	-			-
Miscellaneous	60925	60925		
Severance Pay	3782940	3782940		
Inter-Co Service Charge	11640000		11640000	
General Ledger Total	66743274	55103274	11640000	-
Misc (Inc) Expense	(1231940)	(1231940)		
Bonus	-			
Auto Bonus	1194883	1194883		
	65630817	53990817	11640000	-
Home Office Expense	221500	221500		
	87780817	76140817	11640000	-

4912½ BUFF · 8912½ GREEN · 4212½ WHITE

NWMAR128597

NORTHWEST MARINE IRON WORKS

MARINE DIVISION - OVERHEAD — JUNE 1982 - MAY 1983 — PAGE 1 OF 1

Prepared By	Initials	Date
Approved By		

	1 Total	2 Manufacturing	3 Warehouse	4 Q.A. & Testing	5 Direct 2001	6 Direct Other Jobs	7 Direct Bidding	8 Fringe Benefits	9 G&A	10 Adjustments	11 Unallowable	12
1 Salaries-Production	12922323 2	12922323 2										
2 Salaries-Q.A. & Testing	15193641			2680452	11058113	11371183	317893					
3 Severance Pay	7034350	6462010		572340								
4 Craft Wages	96671333	73128797			17286948	6255588						
5 Payroll Taxes	94137071	79084553		6034187				9018331				
6 Maint. Materials & Services	44119092	44119092										
7 Small Tools	44301338	44301338										
8 Rent	36876389	23582669	13293720									
9 Auto & Truck	10112224	10112224										
10 Travel & Business Meetings	916468	916468										
11 Utilities	13665812	12336079	1158517	171216								
12 Bin Stock	9374966	9374966										
13 Depreciation	86708216	71558328	15138833	197099					13438956			
14 P.O.P. User Fee	80095545	80095545										
15 Insurance	38529822								38529822			
16 Outside Labor & Services	1438565	1189285	249280									
17 Safety	10652610	10652610										
18 Group Insurance	13982591	12511622		1470969								
19 Property Taxes & Licenses	27989717	10845797	18846666	58254						15201000		
20 Education & Training	1133329	1133329										
21 Miscellaneous	9286392	9286392										
22 General Ledger Total	771442703	629914336	18100016	11184517	28345061	7392771	317893	9018331	51968778	15201000	-	
23												
24 Misc (Inc) Expense	324587	324587										
25 Bonus	-											
26 Auto Bonus	847622	847622						-				
27	772614912	631086545	18100016	11184517	28345061	7392771	317893	9018331	51968778	15201000	-	
28												
29 Usage Charge	1195277	1195277										
30 Cost of Capital	1491981	1429726	55083	7172								
31 Sale & Leaseback-Land	(4588)	(4588)										
32	1040881912	893128045	23608316	11901717	28345061	7392771	317893	9018331	51968778	15201000	-	

NWMAR128598

NORTHWEST MARINE IRON WORKS

MARINE DIVISION - PAYROLL TAXES JUNE 1982 - MAY 1983 PAGE 1 of 1

	Initials	Date
Prepared By		
Approved By		

	1 Total	2 Fringe Benefits	3 Adjustment
1 Holiday Pay	648763.30	648763.30	
2 Vacation Pay	795035.68	795035.68	
3 Worker's Compensation	281346.99	281346.99	
4 State Unemployment	28837.92	28837.92	
5 Federal Unemployment	3944.20	3944.20	
6 F.I.C.A.	113445.36	113445.36	
7 Health & Welfare	1332499.06	1332499.06	
8 Union Pensions & Benefits	1485708.73	1485708.73	
9 Tri-Met Tax	110542.68	110542.68	
10 General Ledger Total	8648296.92	8648296.92	–

4912½ BUFF · 8912½ GREEN · 4212½ WHITE

NWMAR128599

NORTHWEST MARINE IRON WORKS

MARINE DIVISION - SALES EXPENSE JUNE 1982 - MAY 1983 PAGE 1 of 1

	Initials	Date
Prepared By		
Approved By		

	1 Total	2 G & A	3 Adjustment	4 Unallowable
1 Salaries-Sales	6304200	6304200		
2 Trvl & Business Meetings	4472018	4472018		
3 Payroll Taxes & Benefits	1224159	1224159		
4 Severance Pay	-	-		
5 Auto	580577	580577		
6 Advertising & Public Relations	5556299	5556299		
7 Bad Debts	12920005			12920005
8 Miscellaneous	336722	336722		
9 General Ledger Total	31393980	18473975	-	12920005
10				
11 Misc (Inc) Expense	(17321)	(17321)		
12 Bonus	-			
13 Auto Bonus	17321	17321		
14	31393980	18473975	-	12920005

4912¼ BUFF - 8912¼ GREEN - 4212¼ WHITE

NWMAR128600

NORTHWEST MARINE IRON WORKS

MARINE DIVISION - ADMINISTRATIVE — JUNE 1982 - MAY 1983 — PAGE 1 of 2

	Initials	Date
Prepared By		
Approved By		

	1 Total	2 G & A	3 Contract Admin	4 Purchasing	5 Tech. Doc.	6 Computer	7 Direct 2001	8 Direct Other Jobs	9 Direct Bidding	10 Adjustments	11 Unallowable	12
1 Salaries - G & A	33636597	33636597										
2 Salaries - Contract Admin	52011520		① 6523908				① 20838937	9256034	① 15392641			
3 Salaries - Purchasing	14954308		① 44	14790408			① 163856					
4 Salaries - Tech. Doc.	8872977				2215591		5186185	668091	803110			
5 Salaries - Computer	12702510		① 325059			8991173	① 3293432		① 92846			
6 Payroll Taxes & Benefits	15195063	4497739	6673672	1843161	1092525	1087966						
7 Group Insurance	11419677	3143837	5223360	1382923	829069	840488						
8 Outside Labor & Services	868685			304238	74370	490077						
9 Office Supplies & Postage	12365226	12365226										
10 Dues & Subscriptions	2085951	2085951										
11 Computer Services & Supplies	4974056					4974056						
12 Education & Training	440243	440243										
13 Professional Fees	15342180	15342180										
14 Rent	547085	547085										
15 Travel & Business Meetings	4974329	4974329										
16 Telephone	12323948	12323948										
17 Utilities	1566891	687216	312767	169550	209068	188290						
18 Auto Expense	1640275	1640275										
19 Depreciation	10947802	11170663	358611	194362	240899	8983267						
20 Contributions	42500										42500	
21 Property Taxes & Licenses	487465	188913	105990	57445	71199	63918						
22 Miscellaneous	2605103	2605103										
23 Severance Pay	7420290	4825750		2208180	271480	1114880						
24 Inter-Company Service Chg	60000000									60000000		
25 General Ledger Total	287424681	100475055	19523411	20950267	5004201	25734115	29482410	9924125	16288597	60000000	42500	
26												
27 Misc (Inc) Expense	(22101691)	(22917480)	(97228)	(480000)	(7500)	1400517						
28 Bonus	4526100	4526100	-	-	-	-						
29 Auto Bonus	293646	171940	98406	-	23300	-						
30	270142736	82255615	19524589	20470267	5020001	27134632	29482410	9924125	16288597	60000000	42500	
31												
32												

4912½ BUFF - 8912½ GREEN - 4212½ WHITE

NWMAR128601

NORTHWEST MARINE IRON WORKS

MARINE DIVISION - ADMINISTRATIVE JUNE 1982 - MAY 1983 PAGE 2 of 2

	Initials	Date
Prepared By		
Approved By		

	1 Total	2 G & A	3 Contract Admin	4 Purchasing	5 Tech. Doc	6 Computer	7 Direct 2001	8 Direct Other Jobs	9 Bidding	10 Adjustments	11 Unallowable	12
1 PAGE 1 - TOTALS FORWARD	27014273 6	8225561 5	19524589	20470267	5020001	27134632	29482410	9924125	16288597	60000000	42500	
2												
3 USAGE CHARGE	1248	508				740						
4 Cost of Capital	180314	112679	13049	7072	8766	38748						
5 HOME OFFICE EXPENSE	2760374	2760374										
6	56433636	36961175	20829489	21177467	5896601	31083432	29482410	9924125	16288597	60000000	42500	
7												
8												
9												
10												
11												
12												
13												
14												
15												
16												
17												
18												
19												
20												
21												
22												
23												
24												
25												
26												
27												
28												
29												
30												
31												
32												

4612W BLUE - 8912W GREEN - 4212W WHITE

NORTHWEST MARINE IRON WORKS

Miscellaneous (Income) Expense, Bonus, & Auto Bonus — June 82 - May 83 — Page 1 of 1

Prepared By — Initials — Date
Approved By

	1 Total	2 Marine Manufacturing	3 Marine Sales Expense	4 Marine Admin-G&A	5 Marine Contract Admin.	6 Marine Purchasing	7 Marine Tech Documents	8 Marine Computer	9 Shop Manufacturing	10 Shop Sales Expense	11 Shop Admin-G&A	12 Fabrication	13 Unallowable	14
1 Rental Inc. - Buildings	(376428)			(256428)		(120000)								
2 Sale of Capital Assets	2517183	1172212						1400517	(380000)			432109	(1076555)	
3 Interest Income	(1019954)												(1019954)	
4 Miscellaneous Income	(24236744)			(21858171)		(360000)					(1104851)	(913722)		
5 Purchase Discounts	(671665)			(671665)										
6 Interest Expense	62173984												62173984	
7 Inter-Company Interest	38404507												38404507	
8 Miscellaneous Expense	402153			41898								70	360185	
9 Auto Bonus	(1432391)	(847625)	(17321)	(173114)	(97228)		(7500)			(69289)	(127089)	(93225)		
10 General Ledger Total	76678645	324587	(17321)	(22917480)	(97228)	(480000)	(7500)	1400517	(380000)	(69289)	(1231940)	(574768)	100729067	
11														
12														
13														
14														
15														
16 Bonus	45261100			45261100										
17 Auto Bonus	1446694	847622	17321	171940	98406		23300			74784	119483	93838		
18														
19														
20														
21														
22														
23														
24														
25														
26														
27														
28														
29														
30														
31														
32														

This page shows distribution of General Ledger accounts.
Totals are included on the Overhead Expense, Sales Expense, and Administrative Expense pages.

4x12½ BUFF · 8x12½ GREEN · 4x12½ WHITE

NWMAR128603

Northwest Marine Iron Works
Home Office Expense Summary

Fiscal 1983

	Initials	Date
Prepared By		
Approved By		

1	2	3	4	5	6	7
Department		Costs	Marine Division %	Marine Division Amount	Shop Division %	Shop Division Amount
Executive & Admin		1531137				
Financial		524723				
Fleet		512332				
Other		<56802>				
		2511390	62.3	1564596	4.4	110501
Personnel		389013	65.0	252858	5.9	22952
Data Processing		1578452	49.3	778177	5.3	83658
Income Taxes - State				–		–
	Multnomah County			35120		938
	City of Portland			129623		3451
				2760374		221500

4907 BUFF · 8907 GREEN · 4207 WHITE

NWMAR128604

Northwest Marine Iron Works
Home Office Expenses

Fiscal 1983

Prepared By	Initials	Date
Approved By		

	1 Total	2 Adjustment	3 Unallowable	4 Exec & Admin	5 D.P.	6 Finance	7 Personnel	8 Fleet	9 Other Exp.	10	11	12
1 Gain on Sale of Tyrone Inv	* <701>		<701>									
2 Gain on Sale of Pm	* <1007>		<1007>									
3 Gain on Sale of HR	* 1420707		1420707									
4 Rental Income-Buildings	<35713>								<35713>			
5 Gain on Sale of Capital Assets	-											
6 Interest Income	* <77065>		<77065>									
7 Miscellaneous Income	<77467>								<77467>			
8 Purchase Discounts	<515>								<515>			
9 Interest Expense	* 1918574		1918574									
10 Inter-Company Interest	* <638120>		<638120>									
11 Miscellaneous Expense	* 170010		112940						57070			
12 Auto Bonus	<7971>								<7971>			
13 General Ledger Total	2670732		2735328						<64596>			
14												
15 Salaries	1907674			532624	602694	330107	235472	206777				
16 Payroll Taxes	172410			55559	53859	28625	20759	13608				
17 Maintenance	65946			17644	17582	6780	8178	15762				
18 Expendable Equip.	8516			2415	697	784	421	4199				
19 Rent				-								
20 Boat Supplies & Maint	55963			55963								
21 Auto Expense	83219			30444	3702	15130	4620	29323				
22 Vehicle Lease Expense	156912			-				156912				
23 Utilities	45428			4310	17811	8100	5892	9315				
24 Depreciation	409949			22534	191346	6827	5936	183306				
25 Insurance	44221			3302	1749	786	543	37841				
26 Office Supplies	59877			43437	4462	6190	2999	2789				
27 Group Insurance	211286			42716	87398	36684	23355	21133				
28 Postage & Delivery	3108			3026	6	24	52	-				
29 Professional Services	563175			491894	39	24783	11651	34808				
30 Travel & Business Meetings	60587			23771	22800	4371	8631	1014				
31 Dues & Subscriptions	26058			14757	1422	6135	2768	976				
32 CONT'D	6545061	-	2735328	1344396	1005567	475326	331277	717763	<64596>			

401216 BLUE - 401216 GREEN - 401216 WHITE

NWMAR128605

Northwest Marine Iron Works
Home Office Expenses

Fiscal 1983

	Initials	Date
Prepared By		
Approved By		

	1 Total	2 Adjustment	3 Unallowable	4 Exec & Admin	5 D.P.	6 Finance	7 Personnel	8 Fleet	9 Other Exp.
CONT'D	6545061	–	2735328	1344396	1005567	475326	331277	717763	(64596)
Telephone	84759			9003	49046	10493	6246	9971	
Equipment Rental	104503			15901	83696	2450		2456	
Equipment Maintenance	89923				89923				
Supplies & Accessories	76057				67384			8673	
Software Licenses & Fees	30732				30732				
Misc. Employee Benefits	21955			18304	1211	781	(154)	1813	
Publications & Manuals	21824						21824		
Contributions *	43929		43929						
Advertising & Pub Relations	29974			29737		40	197		
Outside Labor & Services	113606			3088	86934	14404	3616	5564	
Education & Training	46058			7094	26763	4387	7814		
Property Taxes	31510			14719	3979	2675	2653	7484	
Bad Debts *	11506		11506						
Service Adjustment	–								
Miscellaneous	1240			88	5	12		1135	
Gain on Sale of Fleet Veh.	–								
Fleet Direct Costs	108563							108563	
Fleet Billings	(530515)							(530515)	
Service Charges	(11736000)	(11736000)							
General Ledger Total	5657085	(11736000)	2790763	1442330	1445240	510568	373473	332907	(64596)
Auto Bonus	7794								7794
Income Taxes	(1198001)	(1198001)							
General Ledger Total	4466878	(2371601)	2790763	1442330	1445240	510568	373473	332907	(56802)
Usage Charge	60961			3682	3606	1196	4133	48344	
Cost of Capital	370178			85125	129606	12959	11407	131081	
	4898017	(2371601)	2790763	1531137	1578452	524723	389013	512332	(56802)

OKF THAN
CALL THAT FOLLOW

MATCH IS TO
CONTRACT
COST SUM

1983
IN FRONT

NWMAR128607

Northwest Marine

Calculation of Cost of Facilities Capital

Fiscal 1983

Prepared By	Initials	Date
Approved By		

	Cost of Capital Factor	U.S.S. WILSON Base Amount	U.S.S. WILSON Cost of Capital	Commercial Base Amount	Commercial Cost of Capital
Marine Production	7.68 %	11582713	889552	7031073	539986
Marine Computer	$ 387	2661 %	10298	–	–
Marine Purchasing	$ 1.44	2882	4150	2020	2909
Marine Contract Admin	2.66 %	242962	6463	92560	2462
Marine Technical Doc	13.17 %	51862	6830	6681	880
Marine QA and Testing	5.73 %	110581	6336	11372	652
Marine Warehouse	$ 1.38	17772	24525	22047	30425
Shop Production	20.81 %	509012	105925	603819	125655
			1054079		702969
Marine G+A	.57 %	40247321	229410	22853588	130265
Shop G+A	1.58 %	509012	8042	603819	9540
			237452		139805
			1291531		842774

2,134,305

4907 BUFF · 8907 GREEN · 4207 WHITE

NWMAR128608

FORM CASB-CMF

FACILITIES CAPITAL
COST OF MONEY FACTORS COMPUTATION

CONTRACTOR: Northwest Marine Iron Works

BUSINESS UNIT: Marine and Shop Divisions

ADDRESS: P.O. Box 3109
Portland, OR 97208

COST ACCOUNTING PERIOD: Year Ending May 31, 1983		1. APPLICABLE COST OF MONEY RATE 13-2/3%	2. ACCUMULATION & DIRECT DISTRIBUTION OF N.B.V.	3. ALLOCATION OF UNDISTRIBUTED	4. TOTAL NET BOOK VALUE	5. COST OF MONEY FOR THE COST ACCOUNTING PERIOD	6. ALLOCATION BASE FOR THE PERIOD	7. FACILITIES CAPITAL COST OF MONEY FACTORS
BUSINESS UNIT FACILITIES CAPITAL	RECORDED		$13,045,869	BASIS OF ALLOCATION	COLUMNS 2 + 3	COLUMNS 1X4	IN UNIT(S) OF MEASURE	COLUMNS 5 ÷ 6
	LEASED PROPERTY		1,358,642					
	CORPORATE OR GROUP		1,465,297					
	TOTAL		15,869,808					
	UNDISTRIBUTED							
	DISTRIBUTED		15,869,808					
OVERHEAD POOLS	Marine Production		$10,458,859		$10,458,859	$1,429,726	$18,613,786	7.68%
	Marine Computer		283,456		283,456	38,748	100%	$387
	Marine Purchasing		51,735		51,735	7,072	4,902	$1.44
	Marine Contract Admin.		95,454		95,454	13,049	$490,377	2.66%
	Marine Technical Doc.		64,123		64,123	8,766	$66,574	13.17%
	Marine Q.A. & Testing		52,463		52,463	7,172	$125,132	5.73%
	Marine Warehouse		402,950		402,950	55,083	39,819	$1.38
	Shop Production		1,694,209		1,694,209	231,598	$1,112,831	20.81%
G&A EXPENSE POOLS	Marine G&A		2,637,624		2,637,624	360,563	$63,100,909	.57%
	Shop G&A		128,935		128,935	17,625	$1,112,831	1.58%
TOTAL			$15,869,808		$15,869,808	$2,169,402	//////////	//////////

GOES MGMT RPT OH G&A SUMMARY FOR FISCAL 1983

NWMAR128609

Northwest Marine

Accumulation of Average Net Book Value

Fiscal 1983

Prepared By	Initials	Date
Approved By		

	Directly in Pool	Allocated from Home Office	Allocated from Overhead	Total
Marine Division:				
Production	10458859			10458859
Computer	283456			283456
Purchasing	51735			51735
Contract Admin	95454			95454
Technical Documents	64123			64123
QA and Testing	52463			52463
Warehouse	402950			402950
G+A	824276	1566057	247291	2637624
Shop Division				
Production	1694209			1694209
G+A	–	128935		128935
	13927525	1694992	247291	15869808

4007 BLUE · 8007 GREEN · 4207 WHITE

Northwest Marine

Allocation of Marine Overhead Average Net Book Value

Fiscal 1983

Prepared By	Initials	Date
Approved By		

	Average Net Book Value	Marine G+A Percentage	Marine G+A Net Book Value
To Marine Division G+A Pool:			
Computer	283456	73.4%	208057
QA and Testing	52463	2.5%	1312
Contract Administration	95454	31.6%	30163
Technical Documents	64123	12.1%	7759
	495496		247291

4907 BUFF · 8907 GREEN · 4207 WHITE

Northwest Marine
Marine + Shop Divisions
Cost of Facilities Capital
Fiscal 1983

page 1 of 1

	Initials	Date
Prepared By		
Approved By		

	Net Book Value per Actg Records June 1, 1982	May 31, 1983	Avg	At Interest Rate 13.67 %
Shop Production	1399914	1988504	1694209	231598
Marine:				
Manufacturing	11395403	9522315	10458859	1429726
G+A	906647	741905	824276	112679
Computer	315078	251834	283456	38748
Contract Admin	106364	84545	95454	13049
Tech Doc	71452	56793	64123	8766
QA+Testing	58459	46467	52463	7172
Purchasing	57648	45822	51735	7072
Warehouse	449006	356894	402950	55083
	14759971	13095079	13927525	1903893

Computation of Average Interest Rate

As Published by Treasury Department		Months	Extended	Average
Jan 1, 1982 - June 30, 1982	14.75 %	1	14.75	
July 1, 1982 - Dec 31, 1982	15.50 %	6	93.00	
Jan 1, 1983 - June 30, 1983	11.25 %	5	56.25	
		12	164.00	13.67

4907 BUFF 8907 GREEN 4207 WHITE

NWMAR128612

Northwest Marine

Allocation of Home Office Average Net Book Value
Fiscal 1983

page 1 of 1

Prepared By	Initials	Date
Approved By		

	Average Net Book Value	Division Percentage	Division Net Book Value
To Marine Division G+A Pool:			
Administration	622718	62.3 %	387953
Finance	94796	62.3 %	59058
Personnel	83442	65.0 %	54237
Fleet Management	958896	62.3 %	597392
Data Processing	948107	49.3 %	467417
	2707959		1566057
To Shop Division G+A Pool:			
Administration	622718	4.4 %	27400
Finance	94796	4.4 %	4171
Personnel	83442	5.9 %	4923
Fleet Management	958896	4.4 %	42191
Data Processing	948107	5.3 %	50250
	2707959		128935

4907 BUFF · 8907 GREEN · 4207 WHITE

Northwest Marine
Home Office
Cost of Facilities Capital
Fiscal 1983

page 1 of 1

	Initials	Date
Prepared By		
Approved By		

	Net Book Value per Actg Records			At Interest Rate 13.67 %
	June 1, 1982	May 31, 1983	Avg	
Admin	461132	782751	621942	85019
Marketing	862	690	776	106
	461994	783441	622718	85125
Finance	106690	82902	94796	12959
Personnel	96838	70046	83442	11407
Fleet	961625	956168	958896	131081
MIS	949149	947064	948107	129606
	2576296	2839621	2707959	370178

4907 BLUE · 8907 GREEN · 4207 WHITE

NWMAR128614

Northwest Marine Iron Works

Allowable Bid and Proposal Expenses

Fiscal 1983

	Initials	Date
Prepared By		
Approved By		

Craft 21	QA and Testing:				
	Labor			3179	
	Overhead Calculation:	3179			
		95.1131161 %			
				3024	
					6203
Craft 23	Contract Administration:				
	Labor			154855	
	Overhead Calculation	154855			
		42.4765503 %			
				65777	
					220632
Craft 25	Technical Documents:				
	Labor			8031	
	Overhead Calculation	8031			
		88.5721115 %			
				7113	
					15144
	Total Allowable Bid and Proposal Expenses				241979

4907 BUFF . 8907 GREEN . 4207 WHITE

NWMAR128615

Northwest Marine Iron Works

Allowable Independent Research and Development Expenses

Fiscal 1983

	Initials	Date
Prepared By		
Approved By		

1	2	3	4	5	6	7

None

4907 BUFF · 8907 GREEN · 4207 WHITE

Northwest Marine Iron Works

Fiscal, 1983 — Allowable Bid and Proposal Expenses —

Prepared By	Initials	Date
Approved By		

	CRAFT 21		CRAFT 23		CRAFT 25		
	Q.A. and Testing		Contract Administration		Technical Documents		TOTALS
	Labor	Overhead @95.1316%	Labor	Overhead @43.4765039%	Labor	Overhead @95.7211 5%	
SS Baldbutte			588	250			838
SS Golden Gate			3113	1322	23	20	4478
SS President Cleveland			497	211			708
BT Alaska			493	209			702
MV Malaspina			755	321	10	9	1095
MV Pacific Duke			185	79			264
Tug Tyee			163	69			232
USS Downes					16	14	30
Exxon Budget Estimating			139	59			198
Port Cranes			185	79			264
MV Elisa			55	23			78
Thompson Pass + Brooks Range			1869	794			2663
Exxon New Orleans			1514	643			2157
Texaco Minnesota			1155	491			1646
Barge Betty L			192	82			274
OverSeas Joyce			180	76			256
Barge Cordova			1139	484			1623
Cornucopia			6099	2591	12	11	8713
Log Carrier			628	267			895
Texaco New Jersey			185	79			264
Argyle Bucket			41	17			58
MV Enna G			722	307			1029
Texaco Georgia			1992	846			2838
Chevron Mississippi			822	349			1171
Chevron Colorado			2122	901			3023
Coast Range			115	49			164
Mission Santa Clara			58	25			83
Buoy Imodco			1687	717			2404

NWMAR128617

Northwest Marine Iron Works

Fiscal 1983 — Allowable Bid and Proposal Expenses —

Prepared By	Initials	Date
Approved By		

	CRAFT 21		CRAFT 23		CRAFT 25		
	Q.A. and Testing		Contract Administration		Technical Documents		TOTALS
	Labor	Overhead @ 95113161%	Labor	Overhead @ 42476503%	Labor	Overhead @ 88572115%	
B.T. San Diego			759	322			1081
USNS AJ Myer			379	161			540
Lion of California			38	16			54
Mobil Meridian			949	403			1352
SS Hillyer Brown			860	365			1225
President Macapagal			283	120			403
MV Polly			102	43			145
MV Ophelia			96	41			137
Maryland			241	102			343
APB Prision Ship			402	171			573
TT Brooklyn			3037	1290			4327
Maizuru Maru			80	34			114
SS President Taft & Fillmore			919	390			1309
Dredge Yaquina			39	17			56
S/L Newark			651	277			928
Chevron NH_3 Carrier			170	72			242
Puerto Rican			128	54			182
Exxon North Slope			1356	576			1932
Hepburn/Cook	2790	2654	26894	11424	6608	5853	56223
USNS Hess			2117	899	29	26	3071
Chevron Oregon			3393	1441			4834
Protector Alpha			446	189			635
MV Ocean Beauty			237	101			338
Mobil Oil			1205	512			1717
USNS Silas Bent			2119	900			3019
Ferry Conversion			38	16			54
MV Laloto			115	49			164
Sea Bells			59	25			84

NWMAR128618

Northwest Marine Iron Works

Fiscal 1983 — Allowable Bid and Proposal Expenses —

Prepared By	Initials	Date
Approved By		

	CRAFT 21 Q.A. and Testing		CRAFT 23 Contract Administration		CRAFT 25 Technical Documents		TOTALS
	Labor	Overhead @95/113/61%	Labor	Overhead @47/47/65/39%	Labor	Overhead @88/57/21/15%	
MV Hyundai			79	34			113
Esso Modulu			450	191			641
Dredge Biddle			2187	929	16	14	3146
USNS Dutton			3242	1377			4619
SS Arco Spirit			63	27			90
MV South Priak			18	8			26
Air Filco Estimate			164	70			234
ST-40			144	61			205
MARAD			300	127			427
OverSeas Ohio			387	164	20	18	589
CGC Yocona			655	278	13	11	957
Exxon Lexington			4120	1750	26	23	5919
Ming Winter			137	58			195
Arco Independence			1800	765			2565
Exxon Galveston			1875	796	7	6	2684
Arco Resolution			878	373	6	5	1262
MV Octa			198	84			282
Chevron Louisiana			1147	487	8	7	1649
MV Protector II			506	215			721
Western Lion			254	108			362
Jade Phoenix			174	74			248
American Spartan			2255	958	28	25	3266
USS Constellation			3849	1635			5484
Project Orient			59	25			84
Exxon Benicia			1067	453			1520
SS Tonsina			1948	827	10	9	2794
Felicia V			377	160			537
State Ferry			77	33			110

Northwest Marine Iron Works

Fiscal 1983 — Allowable Bid and Proposal Expenses —

Prepared By	Initials	Date
Approved By		

	CRAFT 21 QA and Testing		CRAFT 23 Contract Administration		CRAFT 25 Technical Documents		TOTALS
	Labor	Overhead @ 95.1131616%	Labor	Overhead @ 124.7650309%	Labor	Overhead @ 88.5721154%	
Building Modules			65	28			93
Tacoma Boat Solicitation			1239	526			1765
Howe Baker Eng's: Reformer Section			150	64			214
Shasta	116	110	19551	8305	423	375	28880
ACV Proposal - Sohio	84	80	4945	2100	647	573	8429
Mission Santa Clara			3437	1460	2	2	4901
President Taylor			686	291			977
Northern Lion			402	171			573
Mobil Oil			730	310			1040
Hovercraft			405	172			577
USNS Sioux			1157	491	5	4	1657
Salt Bucket (Brady Hamilton)			81	34			115
Sierra Madre			40	17			57
SS Manukai			101	43			144
USS Truxtun			296	126			422
Eastern Star			108	46			154
Rewarmer Furnace			196	83			279
Shaver Barge			98	42			140
Barge Betty L			685	291			976
Southern Lion			181	77			258
Biddle			810	344			1154
Kawishiwi			197	84			281
Florence			1060	450			1510
Ultramar			56	24			80
MV Philadelphia Sun			190	81			271
John Day Dam			181	77			258
Barge 704			453	192			645
Dry Dock 1			181	77			258

NWMAR128620

Northwest Marine Iron Works

Fiscal 1983 — Allowable Bid and Proposal Expenses —

Prepared By	Initials	Date
Approved By		

	CRAFT 21		CRAFT 23		CRAFT 25		TOTALS
	QA and Testing		Contract Administration		Technical Documents		
	Labor	Overhead @95.131361%	Labor	Overhead @62.476503%	Labor	Overhead @88.572115%	
USCGC Glacier	189	180	8975	3812	102	90	13348
Observation Island			4155	1765			5920
OverSeas Boston			236	100	20	18	374
Alaska Standard			1088	462			1550
Sansinena			505	215			720
	3179	3024	15855	6777	8031	7113	21979

NWMAR128621

4513 - Buff
8513 - Green

	Initials	Date
Prepared By		
Approved By		

Northwest Marine Iron Works

Reconciliation of Gross Payroll to Labor Costs

Fiscal 1983

		1	2	3	4	5	6	7	8	9	10	11	12	13	
		June 82	July 82	Aug 82	Sept 82	Oct 82	Nov 82	Dec 82	Jan 83	Feb 83	Mar 83	Apr 83	May 83	Total	
1	Intra Company	6850	6822	6753	6989	3646	2155	2275	2192	2155	2155	2143	2143	46278	1
2	Marine Jobs	1922739	1630001	2447917	3374459	2396201	1656777	1654142	1415635	631533	922710	1555874	2160099	18428807	2
3	Dash-1 Jobs	58092	71882	81786	147964	121099	52594	24875	11973	10368	29040	873	-	628746	3
4	Shop Jobs	85212	67076	84423	41922	33486	24695	47995	27976	60020	43277	19484	16835	502411	4
5	Fabrication Jobs	41369	98506	97109	125754	72902	66748	31127	20331	6575	3207	6322	25233	595183	5
6	Marine Holiday	74831	73630	212	87394		124593	251592	38029	29866	3784			683871	6
7	Shop Holiday	4852	13017		7701		7752	10508	296	2813				42939	7
8	Fabrication Holiday	1760	2833		5202		4633	11119		432				27979	8
9	Marine Vacation	69267	103743	78194	102600	69411	141969	90859	90599	71251	67164	43192	31526	978775	9
10	Shop Vacation	5238	9116	6478	4358	4528	22622	5014	10514	76	3151	10480	2039	83614	10
11	Fabrication Vacation	3878	3268	2031	2258	2142	4055	10161	8719	489			1002	37943	11
12	Accrued Bonus		604450											604450	12
13	Fab - Salaries - Production	4663	5213	4563	4563	4563	4563	4563	4389	2500			2300	41880	13
14	Fab - Overhead - Severance								952					952	14
15	Fab - Craft Wages	13396	8958	9318	12567	8504	6798	7506	1540	1115	2896	3814	2290	78402	15
16	Fab - Auto & Truck	67	172	24	73	64	120							360	16
17	Fab - Salaries - Sales	2400	2400	2400	2400	2400	2400	2400	1643					18443	17
18	Fab - Sales Exp - Severance								554					554	18
19	Fab - Salaries - G&A	9970	9967	9900	9986	9995	9741	10069	8429	7547	7476	9986	7438	110504	19
20	Fab - Salaries - Eng & Est	6893	6963	6963	8944	7387	7387	9423	7883	2500	2500	2165	2500	79448	20
21	Fab - Admin - Severance								2478	464		23	41	3006	21
22	Shop - Salaries - Production	19892	19891	19892	19891	19938	19949	19891	25819	12568	12569	12568	12568	215436	22
23	Shop - Overhead - Severance								4695	8909	8517	6971	6522	35614	23
24	Shop - Craft Wages	19916	12193	14938	21849	19678	18460	15876	12372	5569	8025	4526	1555	154457	24
25	Shop - Small Tools	144	102	203	122	6	117							694	25
26	Shop - Auto & Truck	152	93	64	18	6	63							396	26
27	Shop - Safety	12												12	27
28	Shop - Miscellaneous	24												24	28
29	Shop - Salaries - Sales	5096	5095	5111	5096	5178	5194	5098	5428	4828	4197	4635	5095	60351	29
30	Shop - Sales Exp - Severance									277				277	30
31	Shop - Salaries - G&A	21648	21923	21867	21679	21780	22672	22090	22044	14557	13369	14588	14801	233018	31
32	Shop - Salaries - Eng & Est	12727	10924	10924	11130	8511	8511	8511	9216	6844	6844	6844	6844	107830	32
33	Shop - Admin - Severance								3132	7035	6264	6310	5897	28628	33
34	Marine - Salaries - Production	111871	113631	105809	107475	108739	112534	111665	112187	107565	98959	98940	77237	1265712	34
35	Marine - Salaries - QA & Testing	11859	11859	11991	11944	12729	12729	12729	15296	14488	14488	13769	6340	150221	35
36	Marine - Overhead - Severance								858	6129	4338	17090	19203	47615	36
37	Marine - Craft Wages	213010	107633	71953	106221	88962	83267	76858	59065	44774	43677	25794	45132	966436	37
38	Marine - Salaries - Sales	5254	5253	5254	5253	5254	5253	5254	5253	5254	5263	5254	5253	63042	38
39	Marine - Salaries - G&A	28457	28394	28488	28401	28639	28593	28508	28232	27873	27653	28034	25502	334774	39
40	Marine - Salaries - Contract Admin	41741	41741	41741	41164	41741	41741	45291	44991	44991	44991	44991	44991	520115	40
41	Marine - Salaries - Purchasing	13960	13930	12356	12264	12347	12340	12279	13137	13098	13027	13011	9234	151183	41
42	Marine - Salaries - Tech. Doc.	6237	7013	8398	7511	8489	8871	8961	9006	6617	6162	5902	3717	86884	42
43	Marine - Salaries Computer	10395	10999	10958	11473	11419	11425	13656	9916	10392	10037	10098	7976	128739	43
44		2862872	3128531	3166018	4356625	3141739	2535411	2559675	2033876	1171462	1415930	573551	607313	25543003	44

NWMAR128622

4513 - Buff
8513 - Green

	Initials	Date
Prepared By		
Approved By		

Northwest Marine Iron Works

Reconciliation of Gross Payroll to Labor Costs

Fiscal 1983

		1	2	3	4	5	6	7	8	9	10	11	12	13
		Jun 82	Jul 82	Aug 82	Sept 82	Oct 82	Nov 82	Dec 82	Jan 83	Feb 83	Mar 83	Apr 83	May 83	Total
1	Totals Forward	2852872	3128531	3166018	4356625	3141739	2535411	2559675	2033876	1171462	1415930	573551	607313	27543003
2	Marine-Admin-Severance								403			4859	45167	5429
3	Mileage													
4	Marine Jobs	1869	953	377	977	745	489	885	359	413	404	551	503	9025
5	Dash-1 Jobs				12	8	4	7			8			39
6	Shop Jobs	640	844	160	239	140	40	813		105				2981
7	Fabrication Jobs	4						10						14
8	Marine-OH-Auto-Truck	24	41	26	12	24	19	15	30	23	81	97	76	491
9	Suspense - Labor								9757	(20884)	10666	915	(15972)	(1138)
10	" - Mileage										(21)	8	(16)	(29)
11														
12	Gross Payroll	2855409	3130392	3167081	4357865	3142656	2535963	2561405	2044425	1151119	1427068	579981	651451	27604815

Northwest Marine

Status of Cost Accounting Standards

	Initials	Date
Prepared By		
Approved By		

a. The Date of Latest Disclosure Statement. April 14, 1982

b. Whether You Are in Compliance with Latest Standards. In Compliance

c. The Status of Any Outstanding Noncompliance Issues. None

d. A Description of Each Significant Cost Accounting Practice Change During the Period. None

NORTHWEST MARINE IRON WORKS

VESSEL NAME: GEORGE PHILLIP — BID SUMMARY — REVISED: 17-Feb-88

OWNER: NAVY

E.T.A 07/11/88

E.T.D 04/21/89

S U M M A R Y O F R E V E N U E A N D E X P E N S E S

	TOTAL			ORIGINAL BID		RESERVATION		UNBID GROWTH	
	DOLLARS	PER HR	PERCENT	DOLLARS	PER HOUR	DOLLARS	PER HOUR	DOLLARS	PER HOUR
	BID HOURS-->303,000			BID HOURS-->255,000		BID HOURS--> 48,000		BID HOURS-->	0
REVENUES:									
LABOR	7,434,000	24.53	50.45%	6,474,000	25.39	960,000	20.00	0	ERR
PERFORMANCE FEE	0	0.00	0.00%	0	0.00	0	0.00	0	ERR
MATERIALS	1,873,336	6.18	12.71%	1,662,136	6.52	211,200	4.40	0	ERR
SUBCONTRACTORS	3,463,232	11.43	23.50%	3,304,832	12.96	158,400	3.30	0	ERR
PORT OF PORTLAND	1,965,393	6.49	13.34%	1,889,606	7.41	75,787	1.58	0	ERR
FIXED CONTRACT PRICE	0	0.00	0.00%	0	0.00	0	0.00	0	ERR
TOTAL REVENUES	14,735,961	48.63	100.00%	13,330,574	52.28	1,405,387	29.28	0	ERR
	PERF HRS--> 303,000			PERF HRS--> 255,000		PERF HRS--> 48,000		PERF HRS-->	0
DIRECT EXPENSES:									
LABOR	3,985,820	13.15	27.05%	3,365,660	13.20	620,160	12.92	0	ERR
PAYROLL TAXES & BENEFIT	2,096,760	6.92	14.23%	1,764,600	6.92	332,160	6.92	0	ERR
MATERIAL	1,854,136	6.12	12.58%	1,662,136	6.52	192,000	4.00	0	ERR
SUBCONTRACTORS	3,448,832	11.38	23.40%	3,304,832	12.96	144,000	3.00	0	ERR
PORT OF PORTLAND	1,965,393	6.49	13.34%	1,889,606	7.41	75,787	1.58	0	ERR
MANAGEMENT RESERVE	0	0.00	0.00%	0	0.00	0	0.00	0	ERR
TOTAL DIRECT EXPENSES	13,350,941	44.06	90.60%	11,986,834	47.01	1,364,107	28.42	0	ERR
CONTRIBUTION MARGIN	1,385,020	4.57	9.40%	1,343,740	5.27	41,280	0.16	0	ERR
PRODUCTION OVERHEAD	1,160,490	3.83	7.88%	976,650	3.83	183,840	0.72	0	3.83
AVAILABLE FOR G & A	224,530	0.74	1.52%	367,090	1.44	(142,560)	(0.56)	0	ERR
EFFECTIVE BID RATE	24.65			25.39		20.70		ERR	

LABOR BID RATE	25.00	20.00	30.50
LABOR EFFICIENCY	0.00%	N/A	N/A
LABOR GROWTH BY HOURS	N/A	48,000	0
LABOR GROWTH BY %	N/A	15.84%	0.00%
BID HRS TO PERF HRS RATIO	N/A	1.0 TO 1	1.0 TO 1
MATERIAL % GROWTH	0.00%	20.00%	0.00%
MATERIAL % MARKUP	0.00%	10.00%	10.00%
SUBCONTRACTORS % GROWTH	0.00%	15.00%	0.00%
SUBCONTRACTORS % MARKUP	0.00%	10.00%	10.00%

NUMBER OF WORKING DAYS	204	
NUMBER OF MEN(MIN & MAX)	187	187

AMENDMENT OF SOLICITATION/MODIFICATION OF CONTRACT

1. CONTRACT ID CODE

PAGE 1 OF PAGES 2

2. AMENDMENT/MODIFICATION NO. 0014

3. EFFECTIVE DATE 20 May 1988

4. REQUISITION/PURCHASE REQ. NO. N00024-88-PR-25018.3

5. PROJECT NO. (If applicable)

6. ISSUED BY CODE N00024

Department of the Navy
Naval Sea Systems Command
Code 0285/DTR
Washington, DC 20362-5101

7. ADMINISTERED BY (If other than Item 6) CODE

RECEIVED
MAY 23 1988
Ans'd

8. NAME AND ADDRESS OF CONTRACTOR (No., street, county, State and ZIP Code)

CODE FACILITY CODE

9A. AMENDMENT OF SOLICITATION NO. N00024-88-R-8500

9B. DATED (SEE ITEM 11) 23 December 1987

10A. MODIFICATION OF CONTRACT/ORDER NO.

10B. DATED (SEE ITEM 13)

11. THIS ITEM ONLY APPLIES TO AMENDMENTS OF SOLICITATIONS

[X] The above numbered solicitation is amended as set forth in Item 14. The hour and date specified for receipt of Offers [ ] is extended, [X] is not extended.

Offers must acknowledge receipt of this amendment prior to the hour and date specified in the solicitation or as amended, by one of the following methods:

(a) By completing Items 8 and 15, and returning 2 copies of the amendment; (b) By acknowledging receipt of this amendment on each copy of the offer submitted; or (c) By separate letter or telegram which includes a reference to the solicitation and amendment numbers. FAILURE OF YOUR ACKNOWLEDGMENT TO BE RECEIVED AT THE PLACE DESIGNATED FOR THE RECEIPT OF OFFERS PRIOR TO THE HOUR AND DATE SPECIFIED MAY RESULT IN REJECTION OF YOUR OFFER. If by virtue of this amendment you desire to change an offer already submitted, such change may be made by telegram or letter, provided each telegram or letter makes reference to the solicitation and this amendment, and is received prior to the opening hour and date specified.

12. ACCOUNTING AND APPROPRIATION DATA (If required)

N/A

13. THIS ITEM APPLIES ONLY TO MODIFICATIONS OF CONTRACTS/ORDERS, IT MODIFIES THE CONTRACT/ORDER NO. AS DESCRIBED IN ITEM 14.

A. THIS CHANGE ORDER IS ISSUED PURSUANT TO: (Specify authority) THE CHANGES SET FORTH IN ITEM 14 ARE MADE IN THE CONTRACT ORDER NO. IN ITEM 10A.

B. THE ABOVE NUMBERED CONTRACT/ORDER IS MODIFIED TO REFLECT THE ADMINISTRATIVE CHANGES (such as changes in paying office, appropriation date, etc.) SET FORTH IN ITEM 14, PURSUANT TO THE AUTHORITY OF FAR 43.103(b).

C. THIS SUPPLEMENTAL AGREEMENT IS ENTERED INTO PURSUANT TO AUTHORITY OF:

D. OTHER (Specify type of modification and authority)

E. IMPORTANT: Contractor [ ] is not, [ ] is required to sign this document and return _____ copies to the issuing office.

14. DESCRIPTION OF AMENDMENT/MODIFICATION (Organized by UCF section headings, including solicitation/contract subject matter where feasible.)

Except as provided herein, all terms and conditions of the document referenced in Item 9A or 10A, as heretofore changed, remains unchanged and in full force and effect.

15A. NAME AND TITLE OF SIGNER (Type or print)

16A. NAME AND TITLE OF CONTRACTING OFFICER (Type or print)

15B. CONTRACTOR/OFFEROR

(Signature of person authorized to sign)

15C. DATE SIGNED

16B. UNITED STATES OF AMERICA

BY (Signature of Contracting Officer)

16C. DATE SIGNED

NSN 7540-01-152-8070
PREVIOUS EDITION UNUSABLE

30-105

STANDARD FORM 30 (REV. 10-83)
Prescribed by GSA
FAR (48 CFR) 53.243

NWMAR128626

The purpose of this amendment is to revise the requirements of this solicitation due to a change in the ships availability. Accordingly, this solicitation is amended as follows:

1. In Section B, delete page 2 in its entirety and insert attached pages 2 and 2A.

2. Delete Section C in its entirety and insert revised pages 3A through 3C.

3. Delete Section F in its entirety and insert revised pages 6 and 7.

4. Add to Section H, two new clauses provided under attached new insert page 30A.

5. Add Shipalt 626K, work item No. 446-91-001 to work specification package. The specification and related drawing will be provided by SUPSHIP Pascagoula under separate cover.