CITY OF SEATTLE

Seattle
Public Utilities

IMPROVEMENT OF: PUMP STATION IMPROVEMENT
PUMP STATION #2, #6, #45

FUNDED BY: **DRAINAGE AND WASTEWATER FUND**

BIDS OPEN: **January 16, 2001**

SEATTLE, WASHINGTON

KCSlip4 33961

SEA400508

City of Seattle

Pump Station Improvements Pump Station #2, #6, #45

Bid Opening Date: **January 16, 2002**

Ordinance **120165**

PW# [**2001- 078**]

PROJECT LOCATION: This Project is located as follows:

1. Pump Station # 2 - 901 Lakeside Ave.
2. Pump Station # 6 - 4645 Lake Washington Blvd. South
3. Pump Station #45 – 7609 Perimeter Road S.

PROJECT DESCRIPTION: This Project consists of the following elements of Work:
Installation of concrete generator pad and concrete retaining wall with guardrail; installation of generator (owner supplied) including construction of all associated conduit and electrical wiring; installation of automatic transfer switch (owner supplied) including construction of all associated conduit and electrical wiring; installation of chain link fence and gate; removal of surface items; planting and watering of trees.

ESTIMATE: The Engineer's Estimate for this Project is $ 86,000

BID SUBMITTAL: Sealed Bids will be received for this Project by the City of Seattle, Public Works and Consultant Contracting Section of the Department of Finance at its office in the Arctic Building, Suite 800, 700 Third Avenue, Seattle, Washington 98104 only up to **2:00 P.M. on Wednesday, January 16, 2002** after which time Bids will be publicly opened and summarily read. Bids received after 2:00 P.M. will not be accepted or read.

PRE-BID SITE INSPECTION: A mandatory pre-bid meeting will be held on **January 8th, 2002 at 10:00 AM** at Pump Station #2. No Bid will be accepted from any Bidder who does not attend the mandatory pre-bid meeting.

OBTAINING BID DOCUMENTS: The Drawings and Project Manual may be obtained by downloading or by ordering a CD-ROM on the City's website, http://www.cityofseattle.net/citybid

The Drawings and Project Manual may also be obtained by Bidders at:

Records Vault Counter
Seattle Public Utilities
Room 801, Municipal Building
600 Fourth Avenue
Seattle, Washington 98104-1709
(206) 684-5963
FAX (206) 684-7616

VIEWING BID DOCUMENTS: A copy of the Drawings and Project Manual may be viewed at the office of the City's Public Works and Consultant Contracting Section. Drawings and Project Manuals are also on file at the following plan centers: Construction Market Data, Renton; Construction Data Plan Center, Seattle; Association of Subcontractors, Tacoma; Eastside Plan Center, Bellevue; Valley Plan Center, Kent; and Builders Exchange of Washington Inc, Everett.

BID GUARANTY: No Bid will be considered unless accompanied by a Surety company Bid bond, or a certified or cashier's check payable to the order of The City of Seattle for a sum not less than five percent (5%) of the total amount of the Bid.

EQUAL BENEFITS REQUIREMENTS: Consistent with Seattle Municipal Code Ch. 20.45 and the Equal Benefits Program Rules, the Contractor will be required to provide the same or equivalent benefits to its employees with domestic partners as the Contractor provides to its employees with spouses.

.

The right is reserved to reject any and all Bids.

Brenda Bauer
Contracting Manager

Date of 1st Publication: **Dec. 18th, 2001**

Adltr [1]
Rev. 3-26-01

KCSlip4 33963

The City of Seattle
Department of Finance

Project Manual

for

Pump Station Improvements Pump Station #2, #6, #45

As Authorized by Ordinance No. **120165**
Funding Source: **Drainage and Wastewater Fund**

Prepared by the
Seattle Public Utilities

LLOYD SINGLETON
STATE OF WASHINGTON
32234
REGISTERED PROFESSIONAL ENGINEER

EXPIRES 9/14/02

Approved: _____ 9 Dec 01
for Engineering Services Branch Director Date

APPROVED FOR ADVERTISING
DWIGHT DIVELY
DIRECTOR OF FINANCE

12-12-01
Date

BY: _____
Contracting Manager

MEP sigpage
Rev. 2-07-01

Pump Station Improvement Pump Station #2, #6, #45

TABLE OF CONTENTS

Page No.

Advertisement for Bids
Signature Page
Table of Contents

Bid Requirements

0-01.1 Instructions to Bidders 1
0-01.2 Bidders Checklist (City) 3
0-01.3 Bid Form 4
0-01.3(1) Bid 4.0-4.3
0-01.3(2) Affidavit 5

Contract Requirements

DIVISION 0

0-02.1 Agreement Form 7
0-02.2 Amendments and Special Provisions 10
0-02.3 Plans and Specifications 10
0-02.4 Location of Project 10
0-02.5 Nature of Improvement 10

DIVISION 1 GENERAL REQUIREMENTS

1-01 Definitions and Terms 12

1-02 Bid Procedures and Conditions 12

1-03 Award and Execution of Contract 13

1-04 Scope of Work 14

1-07 Legal Relations and Responsibilities to the Public 14

1-08 Prosecution and Progress 16

1-09 Measurement and Payment 17

DIVISION 2 EARTHWORK

2-09 Structure Excavation 21

2-12 Construction Geotextile 21

DIVISION 6 STRUCTURES

6-02 Concrete Structures 22

DIVISION 7 STORM DRAINS, CULVERTS, SANITARY AND COMBINED SEWERS WATER MAINS AND RELATED STRUCTURES

7-17 Storm Drains and Sanitary Sewers 22

DIVISION 8 MISCELLANEOUS CONSTRUCTION

8-02 Roadside Planting 22

8-12 Chain Link Fence and Wire Fence 22

8-33 Conduit and Trenching 22

Appendix

Soil Boring Locations and Logs

Attached Drawings and Revised Standard Plans

City Forms

SPU Pre-Award Bidder Information Statement
Contract Bond (Sample)
Subcontractor Approval Applications (Sample)
Final Contract Payments Reporting Form
Equal Benefits Compliance Declaration
Request For Approval Of Material Sources
Contractors Shop Drawing Review and Approval Form
Hazardous Waste Clearance Program Instructions
Contractor Performance Evaluation Program
Contractor's Project Labor List

Wage Rates

State Prevailing Wage Rates

Supplemental

Generator Information
Automatic Transfer Switch
King County Airport Property Boundaries

KCSlip4 33966

SEA400513

BIDDING REQUIREMENTS

I. GENERAL

This Contract will be administered by the Director of the Seattle Public Utilities, subject to the approval and acceptance of the Director of Finance. **ANY QUESTIONS REGARDING THIS PROJECT SHOULD BE DIRECTED TO THE FOLLOWING:**

Before Award: **RANDY EARLYWINE**
Contracts and Standards Section
Seattle Public Utilities
600 4th Avenue, Room 800
Seattle, Washington 98104-1709
Phone (206) 684-8561

After Award: Construction Management Division
Seattle Public Utilities
600 4th Avenue, Room 600
Seattle, Washington 98104-1709
Phone (206) 684-5068

II. BID OPENING

The authorized Bid Form shall be submitted as specified in Section 1-02.9(1). In accordance with Section 1-02.12, Bids will be opened and read orally in:

Room 1003, Arctic Building,
700 Third Avenue,
Seattle Washington 98104-1809,

immediately after 2:00 p.m. on the following date:

January 16, 2002

III. TIME OF COMPLETION

Work shall begin immediately on the Notice To Proceed Date in the Written Notice from the Engineer, Seattle Public Utilities, and after the date of such notice shall be completed within the following period per Section 3 of the Agreement:

22 WORKING DAYS

IV. LIQUIDATED DAMAGES

If the successful Contractor fails to complete Work within the time set forth above, he shall be charged Liquidated Damages per Section 4 of the Agreement at the rate of **$1,000** per Working Day. See Section 1-08.9 for additional details.

V. SOILS INFORMATION

Refer to Section 1-02.4(2) in the Project Manual for information about any geotechnical report, soil boring data, or soil sample test data accumulated by the Engineer.

VI. ITEMS OF INTEREST TO BIDDERS

		Reference
Addenda		1-02.6
Additives, Alternates, Deductives		1-02.11
Award of Contract		1-03.2
Bid Documents		1-02.2
Bid, Form and Style		1-02.5
Bid Guaranty		1-02.7
Bid Guaranty, Return of		1-03.6
Bid, Public Opening of	Instructions to Bidder	1-02.12
Bid Submittal		1-02.9(1)
Bid Submittal Date, Change of		1-02.9(2)
Bid Tabulation		1-03.1(2)
Bid, Modification or Withdrawal of		1-02.10
Bidders, Disqualifications of		1-02.14
Bidders, Qualifications of		1-02.1
Bids, Irregular		1-02.13
Bond, Bid - see Bid Guaranty		1-02.7
Bond, Contract		1-03.4
Contract, Execution of		1-03.3
Contract, Failure to Execute the		1-03.5
Disqualifications of Bidders		1-02.14
Equal Employment Opportunity And Non-Discrimination Requirements		1-07.11
Error, Claim of		1-03.1(3)
Examination of Bid Documents and Project Site		1-02.4
Information, Pre-Award		1-03.1(4)
License, Business/Contractor Registration		1-03.3(1)
Liquidated Damages	Agreement Form, Section 4	1-08.9
Non Collusion Requirement		1-02.8
Owner, Rights of the		1-03.1(5)
Qualifications of Bidders		1-02.1
Quantities, Estimated		1-02.3
Bidder/Subcontractor List (For Bids of $1,000,000 or more)		1-02.9(3)
Time for Completion	Agreement Form, Section 3	1-08.5
Wages, Prevailing Wages		1-07.9(1)
Prebid Meeting	Advertisement Letter and	1-02.4(1)

1. The authorized Bid Form must be submitted to:

   Public Works and Consultant Contracting Section
   City of Seattle Department of Finance
   Arctic Building, Suite 800
   700 Third Avenue
   Seattle, WA 98104-1809

   by 2:00 p.m. on the date designated for receipt of Bids in the Advertisement for Bids.

2. With regard to **Section 0-01.3(1) BID:**

   a. Have you enclosed with your Bid the Bid Guaranty for not less than 5% of the maximum Bid amount that could be awarded including retail sales tax?
   b. Have you Bid on all items including Additives, Alternates, and Deductives (when indicated)?

3. With regard to **Section 0-01.3(2) AFFIDAVIT:**

   a. Have you provided all information requested?
   b. Has the official authorized to represent the Bidder signed the affidavit?
   c. Have you acknowledged all addenda?
   d. Has a Notary Public signed the affidavit and affixed the Notary's seal?

   ALL OF THE ABOVE ITEMS MUST BE COMPLETED OR YOUR BID MAY BE DECLARED NON-RESPONSIVE.

0-01.3(1) BID

TO THE DIRECTOR OF FINANCE OF THE CITY OF SEATTLE:

A. The undersigned Bidder hereby certifies to have personally and carefully examined the Bid Documents issued for: **Pump Station Improvements Pump Station #2, #6, #45** as authorized under Ordinance No. **120165**.

B. The Bidder has examined the Project Site where the Work is to be performed and the conditions affecting the Work;

C. The Bidder has attached a Bid Guaranty in the amount of five percent (5%) of the Total Bid including retail sales tax in the form of cashier's check, certified check, or Bid bond;

D. Understanding that the quantities shown in the Bid are estimates only, being given for the purposes of comparing Bids, the Bidder hereby proposes to furnish all Material and labor and to perform all Work which may be required, and to complete the Work within the time fixed and upon the terms and conditions provided in the Bid Documents for the following prices:

(NOTE: The letters "SP" whenever appearing in the Bid item number column of the Bid Form indicate that additions or revisions to the Standard Specifications applicable to that Bid item are included in the Special Provisions. The Contractor is advised to review those requirements regarding Bid items so designated.

The six digit number above the Bid item description denotes the standard code number for that particular Bid item. The first three digits indicate the associated Specification division and section number. The last three digits comprise the identification number for that item within the particular Section. A non-standard Bid item is indicated whenever the letter "S" appears in the six digit code number.

An asterisk (*) appearing in the Bid item number column of the Bid Form denotes those items in which the Owner will pay retail sales tax in accordance with the excise tax Rule 170 (refer to Section 1-07.2(3) of the Specifications). For all other Bid items, the Contractor shall include retail sales tax in accordance with the excise tax Rule 171 (refer to Section 1-07.2(2) of the Specifications).

City of Seattle

PUMP STATION IMPROVEMENT PUMP STATION #2, #6, #45

Item	Bid Item	Bid Item Description	Estimated Quantity	Units	Unit Price	Extension Unit Price
BASE BID						
SP * 1	109005	MOBILIZATION		LS		
* 2	202015	REMOVE ROCK FACING	40	SF		
* 3	202370	REMOVE PEDESTAL	2	EA		
* 4	203005	COMMON EXCAVATION	40	CY		
* 5	203120	EMBANKMENT COMPACTION	35	CY		
* 6	208010	REBUILD ROCK FACING	20	SF		
SP * 7	209005	STRUCTURE EXCAVATION	100	CY		
* 8	209010	SHORING OR EXTRA EXCAVATION	1	LS		
* 9	212020	CONSTRUCTION GEOTEXTILE FOR SEPARATION	35	SY		
* 10	401002	MINERAL AGGREGATE, TYPE 2	55	CY		
* 11	401217	MINERAL AGGREGATE, TYPE 17	35	CY		
SP * 12	602090	CONCRETE CL AX FOR FOOTINGS	35	CY		
* 13	602130	CONCRETE CL AX FOR RETAINING WALL	10	CY		
* 14	602350	STEEL REINF. BAR, GRADE 60	2,500	LB		
* 15	606030	METAL RAILING, PEDESTRIAN	20	LF		
SP * 16	717985	TEMPORARY SEWER BYPASS	1	LS		

NOT FOR BIDDING PURPOSES USE BID FORM PACKAGE

NOT FOR BIDDING PURPOSES USE BID FORM PACKAGE

Bidder: _____ Page SubTotal: _____

KCSlip4 33972

SEA400519

City of Seattle

PUMP STATION IMPROVEMENT PUMP STATION #2, #6, #45

Item	Bid Item	Bid Item Description	Estimated Quantity	Units	Unit Price	Extension Unit Price
BASE BID						
SP * 17	802026	TREE, CONIFEROUS EVERGREEN, 4 FT (CHINESE JUNIPER)	18	EA		
* 18	802400	RELOCATE TREE	1	EA		
* 19	802700	LANDSCAPE ESTABLISHMENT (MIN. BID = $ 1,000)	1	LS		
SP * 20	812001	CHAIN LINK FENCE, TYPE 1	150	LF		
* 21	812026	CHAIN LINK GATE, SINGLE 6 FT WIDE	3	EA		
SP * 22	833s01	ELECTRICAL WORK	1	LS		

NOT FOR BIDDING PURPOSES USE BID FORM

NOT FOR BIDDING PURPOSES USE BID FORM

Bidder: _____ Page SubTotal: _____

KCSlip4 33973

SEA400520

0-01.3(1) BID (continued)

E. BID SUMMARY:

BASE BID (ITEMS 1 THROUGH 22, INCLUSIVE) $_____

STATE SALES TAX **(8.8%)** $_____

TOTAL AMOUNT BID INCLUDING TAX $_____

NOT FOR BIDDING PURPOSES
USE BID FORM PACKAGE

Bidder: _____
(Business Name)

NOT FOR BIDDING PURPOSES
USE BID FORM PACKAGE

KCSlip4 33974

SEA400521

0-01.3(2) AFFIDAVIT

State of)
) ss
County of)

NOT FOR BIDDING PURPOSES USE BID FORM PROVIDED

The Bidder, being first duly sworn on oath says that the Bid herewith submitted will be conditioned by the following:

A. **BID:** The Bidder agrees to perform the Work in compliance with the Bid Documents, for the prices stated in Section 0-01.3(1) of the Bid Form.

B. **RCW 35.22.650:** The Bidder has complied with RCW 35.22.650.

C. **AFFIRMATIVE ACTION/EQUAL EMPLOYMENT OPPORTUNITY SWORN STATEMENT:** The Bidder agrees to ensure equal opportunity for employment and to engage in affirmative action in accordance with SMC 20.44 and as required in the Project Manual.

D. **NON COLLUSION:** The Bidder, by signing and having the Bid Form notarized, swears, deposes and says that the Bidder has not, either directly or indirectly, entered into any agreement, participated in any collusion, or otherwise taken any action in restraint of free, competitive bidding in the preparation and submission of a Bid to the Owner for consideration in the Award of a Contract on the Improvement described in the Bid Documents.

BIDDER: _____
Business Name

_____
Business Address (Street or P.O. Box) City State Zip Code

( ) _____ ( ) _____
Business Telephone Number Business Fax Number

State of Washington Contractor Registration No.: _____

City of Seattle Business License No.: _____

Receipt is hereby acknowledged of Addenda No(s).: _____, _____, _____, _____, _____

OFFICIAL AUTHORIZED TO SIGN FOR BIDDER:

_____ _____
Signature Print Name and Title

NOT FOR BIDDING PURPOSES USE BID FORM PROVIDED

I certify that I know or have satisfactory evidence that _____ signed this instrument, on oath stated that the party is authorized to execute the instrument and acknowledged it to be the free and voluntary act of such party for the uses and purposes mentioned in the instrument.

Date: _____ _____
NOTARY PUBLIC in and for the State of _____
residing at _____
My appointment expires _____

KCSlip4 33975

SEA400522

CONTRACT REQUIREMENTS

This agreement by and between the Director of Finance, acting on behalf of The City of Seattle, a municipal corporation of the State of Washington, hereinafter referred to as the Owner, and _____ _____, hereinafter referred to as the Contractor, witnesseth that in accordance with the terms and conditions of Contract PW# _____ awarded the _____ day of_____, 20____ the parties agree as follows:

SECTION 1. That the Contractor shall do or cause to be done all Work and shall furnish or cause to be furnished all tools, Materials, Equipment, Supplies and labor necessary to improve

PUMP STATION IMPROVEMENTS PUMP STATION #2, #6, #45

as ordered by Ordinance No. **120165** in all respects, in accordance with and as described in the Contract Documents now on file in the office of the Engineer for the following Awarded Contract Price:

Base Bid ..... $ _____

State Sales Tax (**8.8%**) ..... $ _____

Awarded Contract Price ..... $ _____

The Contractor shall provide and bear the expense of all Equipment, Material, Supplies, work, and labor of any sort whatsoever that may be required for the transfer of Materials and for constructing and completing the Work provided for in this Contract and every part thereof, except such as are mentioned in the Contract Documents furnished by the Owner.

SECTION 2. The parties shall be bound by the Constitution and Laws of the State of Washington and the Charter, Ordinances, Rules and Regulations of the City of Seattle and by all applicable federal laws and government regulations, which provisions are incorporated by reference herein.

For the convenience of the parties of this Contract it is mutually agreed that any claims or causes of action which the Contractor has against the Owner arising from this Contract shall be brought within 180 calendar days from the Completion Date of the Contract. It is further agreed by the parties that any such claims, disputes, or causes of action which cannot be resolved pursuant to the procedures set forth in the Contract Documents shall be brought only in the Superior Court of King County. The parties understand and agree that the Contractor's failure to bring suit within the time period provided shall be a complete bar to any such claims or causes of action.

SECTION 3. The Contractor shall begin the Work of the Contract on the Notice to Proceed Date stated in the Notice to Proceed issued to said Contractor by the Engineer, and to carry said Work on regularly and without interruption thereafter (unless the Engineer shall otherwise, in writing, specifically direct) with such forces as to complete said Work in a manner acceptable to the Engineer within

22 WORKING DAYS

after such notice to begin Work; the time of beginning, rate of progress, and time of completion being essential and material provisions of the Contract.

SECTION 4. If the Work is not completed within the time specified, the Contractor shall pay to the Owner, as Liquidated Damages, the sum of **$1,000** for each and every Working Day the Work remains physically uncompleted after expiration of the specified time, exclusive of those days wherefore the Engineer has granted an extension of time.

The Contractor hereby agrees the amount set forth above is a reasonable estimate of actual damage which would be caused by the failure to physically complete the work on time, and that the amount indicated is for Liquidated Damages and is not a penalty.

SECTION 5. The Owner agrees to employ the Contractor to complete the Work in accordance with the Contract Documents and agrees to pay for the same according to the schedule of unit, lump sum, or itemized prices listed in the Bid Form, at the time and in the manner and upon the conditions provided for in the Contract.

The Contractor shall inform all Subcontractors who work on the Improvement named in Section 1 of this Agreement of the manner and method of payment and the manner and method of measuring or computing the quantities of subcontracted work.

SECTION 6. In accordance with Chapter 39.12 RCW, the City Charter, and the Project Manual, the Contractor shall pay, or cause to be paid to persons employed on or in connection with this Work, not less than the prevailing rate of wage for an hour's work specified for the labor performed.

SECTION 7. The Contractor on behalf of his or her heirs, executors, administrators, successors, and assigns, does hereby agree to the full performance of all the covenants to which the Contractor is obligated under the terms of the Contract.

SECTION 8. It is further provided that no liability shall attach to the Owner by reason of entering into this Contract except as expressly provided herein.

SECTION 9. In the event of violation of any of these covenants or any provisions thereof, payment due from the Owner on any work done under the Contract may be withheld until full compliance therewith; that the Work may be stopped, or, at the discretion of said Owner, the Contract may be canceled and forfeited.

SECTION 10. Solely with respect to claims for indemnification under this Contract, the Contractor waives, as to the City only, its immunity under Title 51 RCW. This Section has been negotiated by the parties as indicated by their initials below:

the City: _____ the Contractor: _____

IN WITNESS WHEREOF, the Owner has caused these presents to be signed by the designee of Director of Finance; and the Contractor has hereunto affirmed his or her signature.

THE CITY OF SEATTLE
Director of Finance

By _____ Date _____
Contracting Manager

CONTRACTOR

_____
Business name

By _____ Date _____

Title _____

Contractor shall declare option for management of statutory retained percentage of this Contract by checking applicable box below and affixing signature and date.

☐ Contractor hereby elects to have the retained percentage of this Contract held in a non-interest bearing fund by The City of Seattle until sixty (60) days following the Completion Date.

☐ Contractor hereby elects to have The City of Seattle invest the retained percentage of the Contract from time to time as such retained percentage accrues and in accordance with RCW 60.28.011, .021 and .051. Contractor hereby designates:

_____
Name of Financial Institution

_____
Address of Financial Institution

_____
City, State, Zip Code of Financial Institution

as the repository for the escrow of said funds. Contractor hereby further agrees to be fully responsible for payment of all costs or fees incurred as a result of placing said retained percentage in escrow and investing it as authorized by statute. The City of Seattle shall not be liable in any way for any cost or fees in connection therewith.

By _____ Date _____
Contractor's Signature

PUMP STATION IMPROVEMENTS PUMP STATION # 2, #6, #45

0-02.2

SPEC/RE/RE

CRN 01-4C

Dec. 17th, 2001

AMENDMENTS AND SPECIAL PROVISIONS

0-02.3 PLANS, DRAWINGS AND SPECIFICATIONS (2-7-01)

The Work shall be performed in accordance with these amendments and Special Provisions together with the provisions, insofar as they are applicable, of the following documents:

1. The Engineering Drawing No. 777-544, Sheets 1 through 6. The title of Dwight Dively in the signature block is revised to read "Director of Finance".

2. The City of Seattle Standard Plans and Standard Specifications, which are comprised of:

   a. "2000 edition City of Seattle Standard Specifications for Road, Bridge, and Municipal Construction" (hereinafter referred to as the Seattle Standard Specifications).

   b. 2000 edition City of Seattle Standard Plans for Municipal Construction (hereinafter referred to as the Seattle Standard Plans).

   c. City of Seattle Traffic Control Manual for In-Street Work, dated August 1, 1994, which supplements and is to be utilized in conjunction with the current edition of the "Manual on Uniform Traffic Control Devices for Streets and Highways (MUTCD)," as published by the U.S. Department of Transportation, Washington, D.C.

3. The terms and conditions of such permits, agreements, ordinances, regulations, instructions and requirements as may be included in the appendix or otherwise attached hereto.

   NOTE: The amendments and Special Provisions for this Project have been updated to include the appropriate portions of the 2000 WSDOT/APWA Standard Specifications for Road, Bridge and Municipal Construction.

0-02.4 LOCATION OF PROJECT (10-16-00)

This Project is located as follows;

1. Pump Station #2 - 901 Lakeside Ave.
2. Pump Station #6 - 4645 Lake Washington Blvd. South
3. Pump Station #45 – 7609 Perimeter Road S.

0-02.5 NATURE OF IMPROVEMENT (10-16-00)

The Work in general consists of:

Pump Station #2 – Installation of concrete generator pad and concrete retaining wall with metal railing; installation of generator, conduit, and automatic transfer switch including electrical connection; installation of chain link fence and gate; removal of surface items and planting of trees.

Pump Station#6 – Installation of concrete generator pad, generator, conduit, and automatic transfer switch including electrical connection; installation of chain link fence and gate; and planting of trees.

Pump Station #45 – Installation of concrete generator pad, generator, conduit and automatic transfer switch including electrical connection; installation of chain link fence and gate; and planting of trees.

Note: All generators and automatic transfer switches are supplied by the owner and shall be installed by the Contractor. The Contractor is responsible for obtaining all electrical work permits from DCLU.

and such other related and incidental work as may be necessary in conjunction therewith.

DIVISION 1 GENERAL REQUIREMENTS (2-13-01)

The following changes apply to all Division 1 General Requirements:

Delete "ESD" and replace with "Department of Finance".

Delete "Executive Services Department" and replace with "Department of Finance".

Delete "Executive Services Director" and replace with "Director of Finance".

Delete "Contract Compliance Section" and replace with "Construction and Consulting Contracting Division".

SECTION 1-01 DEFINITIONS AND TERMS

1-01.2(1) ASSOCIATIONS AND MISCELLANEOUS (2-13-01)

Delete "ESD Executive Services Department".

1-01.3 DEFINITIONS (7-27-01)

Revise the definition for BID GUARANTY by deleting the reference to "cash".

SECTION 1-02 BID PROCEDURES AND CONDITIONS

1-02.4 EXAMINATION OF BID DOCUMENTS AND PROJECT SITE (10-16-00) [1]

1-02.4(1) GENERAL (10-16-00) [1]

Supplement this Section with the following:

*A mandatory pre-Bid meeting is scheduled for **January 8, 2002 at 10 AM at Pump Station # 2** to review Contract requirements specific to this project.

1-02.4(2) SUBSURFACE INFORMATION [1] (7-27-01)

Supplement this section with the following:

Logs of soil borings from the geotechnical report are located in the appendix of the Project Manual.*

1-02.6 ADDENDA (7-27-01)

In the second paragraph, delete the second sentence and replace with the following:

Addenda will be **sent** to persons or organizations to whom the Bid Documents were issued.

1-02.7 BID GUARANTY (7-27-01)

Delete all references to "cash" in this section.

1-02.14 DISQUALIFICATION OF BIDDERS (10-16-00) [1]

Renumber item number "10." to item number "11." and add new item numbers "10." and "12." as follows:

*10. The Bidder under consideration for Award does not submit the Equal benefits Compliance Declaration, indicating compliance with SMC Ch. 20.45 and the Equal Benefit Program Rules.

12. The Bidder failed to attend a mandatory pre-bid conference (see Section 1-02.4(1)).*

SECTION 1-03 AWARD AND EXECUTION OF CONTRACT

1-03.1(4) PRE-AWARD INFORMATION (10-16-00)

After the second paragraph, insert the following new paragraph:

Except as may be provided for in Equal Benefits Program Rules, the Bidder under consideration for Award must submit the Equal Benefits Compliance Declaration to the Owner prior to Award. The compliance of the Bidder with SMC Ch. 20.45 and the Equal Benefit Program Rules shall be part of the Owner's evaluation of the Bidder's responsibility.

1-03.4 CONTRACT BOND (7-27-01)

Delete item 5. and replace with the following:

5. Contain the following language:

   IT IS FURTHER ACKNOWLEDGED that nothing of any kind or nature whatsoever that will not discharge the Principal shall operate as a discharge or a release of liability of the Surety, any law, rule of equity or usage relating to the liability of sureties to the contrary notwithstanding. The Surety waives notice of any alteration, or extension of time, made by the City except that any single or cumulative Change Orders amounting to more than 25% of the Awarded Contract Price shall require the consent of the Surety.

   The Surety consents to be bound by the laws of the State of Washington and subjected to the jurisdiction of the courts of the State of Washington;

1-03.6 RETURN OF BID GUARANTY (7-27-01)

Delete all references to "cash" in this section.

SECTION 1-04 SCOPE OF WORK

1-04.5(3) CLAIMS (10-16-00)

In item 9., revise the following subitems as follows:

In subitem a., revise "20% markup" to read "26% markup";
In subitem b., revise "15% markup" to read " 21% markup";
In subitem c., revise "15% markup" to read "21% markup";
In subitem d., revise the first sentence to read "Overhead and profit: Markups for Project overhead, general company overhead, bonding, insurance, Business & Occupation tax, and profit shall not exceed the markups allowed in Section 1-09.6;".

SECTION 1-07 LEGAL RELATIONS AND RESPONSIBILITES TO THE PUBLIC

1-07.11 EQUAL EMPLOYMENT OPPORTUNITY REQUIREMENTS

Delete this title and replace with the following new title:

1-07.11 EQUAL EMPLOYMENT OPPORTUNITY AND NON-DISCRIMINATION REQUIREMENTS (2-13-01)

1-07.11(1) GENERAL (10-16-00)

After the first paragraph, insert the following new paragraph:

The Owner and the Contractor are each required to comply with the Fair Contracting Practices Ordinance of The City of Seattle (Ordinance 119601), as amended. Conduct made unlawful by the ordinance constitutes a breach of Contract. Engaging in an unfair contracting practice may also result in the imposition of a civil fine or forfeiture under the Seattle Criminal Code as well as various civil remedies.

1-07.11(2) EQUAL EMPLOYMENT OPPORTUNITY POLICY (2-13-01)

Delete paragraph one and subparagraphs one through four and replace with the following:

*The Contractor shall accept as operating policy the following statement which is designed to further the provision of equal employment opportunity to all persons and to promote the full realization of equal employment opportunity through a positive continuing program:

"The Contractor will not discriminate against any employee or applicant for employment because of race, religion, creed, age, color, sex, marital status, sexual orientation, gender identity, political ideology, ancestry, national origin, or the presence of any sensory, mental or physical handicap, unless based upon a bona fide occupational qualification. The Contractor will take affirmative action to ensure that applicants are employed, and that employees are treated during employment, without regard to their race, religion, creed, age, color, sex, marital status, sexual orientation, gender identity, political ideology, ancestry, national origin, or the presence of any sensory, mental or physical handicap. Such action shall include, but not be limited to the following: employment, upgrading, demotion, or transfer, recruitment, or recruitment advertising, layoff or termination rates of pay or other forms of compensation, and selection for training, including apprenticeship. The Contractor agrees to post in conspicuous places, available to employees and applicants for employment, notices to be provided by the contracting officer setting forth the provisions of this nondiscrimination clause.

"The Contractor will, prior to commencement and during the term of the Contract, furnish to the Executive Services Director (as used herein Director means the Director of the Executive Services Department or the Director's designee) upon the Director's request and on such form as may be provided, a report of the affirmative actions taken by the Contractor in implementing the terms of these provisions. The Contractor will permit access to the Contractor's records of employment, employment advertisements, application forms, and other pertinent data requested by the Director to determine compliance with these requirements.

"If the Director finds probable cause to believe that the Contractor has failed to comply with the terms of these provisions, the Contractor shall be so notified in writing. The Director will give the Contractor an opportunity to be heard within 10-days of the date written notification is sent. After hearing and considering the Contractor's response to the findings (if any) the Director will make a final decision as to whether the Contractor has failed to comply with the provisions of the Contract. If the Director's final decision is that the Contractor has failed to comply with the provisions of the Contract, the Director may suspend the Contract, withhold any funds due or to become due to the Contractor, or both pending compliance by the Contractor."*

1-07.11(6) PERSONNEL ACTIONS (10-16-00)

Delete paragraph one and replace with the following:

Wages, working conditions, and employee benefits shall be established and administered; and personnel actions of every type, including hiring, upgrading, promotion, transfer, demotion, layoff, and termination, shall be taken without regard to race, religion, creed, age, color, sex, marital status, sexual orientation, gender identity, political ideology, ancestry, national origin, or the presence of any sensory, mental or physical handicap. The following procedures shall be followed:

1-07.11(14) NON-DISCRIMINATION IN EMPLOYEE BENEFITS (New Section) (10-16-00)

Compliance with SMC Ch. 20.45: The Contractor shall comply with the requirements of SMC Ch. 20.45 and Equal Benefits Program Rules implementing such requirements, under which the Contractor is obligated to provide the same or equivalent benefits ("equal benefits") to its employees with domestic partners as the Contractor provides to its employees with spouses. At the Owner's request, the

Contractor shall provide complete information and verification of the Contractor's compliance with SMC Ch. 20.45. Failure to cooperate with such a request shall constitute a material beach of this Contract. *(For further information about SMC Ch. 20.45 and the Equal Benefits Program Rules call (206) 684-0202 or review information at* http://cityofseattle.net/contract/equalbenefits/*)*

Remedies for Violations of SMC Ch. 20.45: Any violation of this Section 1-07.11(14) shall be a material breach of Contract for which the Owner may:

1. Require the Contractor to pay liquidated damages in the amount of five hundred dollars ($500.00) per day for each day that the Contractor is in violation of SMC Ch. 20.45 during the term of the Contract; or
2. In the event the Contractor willfully refuses or repeatedly fails to comply with the requirements of SMC Ch. 20.45, terminate the Contract; or
3. Disqualify the Contractor from bidding on or being awarded a City contract for a period of up to five (5) years; or
4. Impose such other remedies as specifically provided for in SMC Ch. 20.45 and the Equal Benefits Program Rules promulgated thereunder.*

1-07.12(2) NON-DISCRIMINATION (10-16-00)

Delete this Section and replace with the following:

*Contractors, Bidders, and proposers shall not create barriers to open and fair opportunities for WMBEs to participate in all City contracts and to obtain or compete for contracts and subcontracts as sources of Supplies, Equipment, construction and services. In considering offers from and doing business with Subcontractors and Suppliers, the Contractor shall not discriminate on the basis of race, religion, creed, age, color, sex, marital status, sexual orientation, gender identity, political ideology, ancestry, national origin, or the presence of any mental or physical disability in an otherwise qualified disabled person. *

1-07.18 INSURANCE

1-07.18(4) CONDITIONS (3-29-01)

Delete item 2. and replace with the following:

2. Be primary as respects the City, and any other insurance maintained by the City shall be excess and not contributing insurance with the Contractor's insurance;

1-07.18(5) EVIDENCE OF INSURANCE (3-29-01)

Revise item 3.a. as follows:

3. a. Insurance Services Offices (ISO) Standard Endorsement: An additional insured endorsement issued on an ISO form ***(i.e. CG 20 10 11 / 85 or CG 20 26)***

SECTION 1-08 PROSECUTION AND PROGRESS

1-08.1(2) PRECONSTRUCTION CONFERENCE (7-27-01)

In the last paragraph, delete item 5. "Contractor's Work Force Report Form".

1-08.1(3) SUBCONTRACTING (2-13-01)

Delete the last paragraph and replace with the following new paragraph:

By no later than 30 Days after the Physical Completion Date, the Contractor shall submit to the Owner a completed Final Contract Payments Reporting Form, listing the name of and dollar amount paid to each Subcontractor and Supplier utilized by the Contractor providing more than $5,000 worth of goods and/or services on the Project, as well as the dollar amount paid to the Contractor. A sample of the form is included in the Sample Forms section of the Project Manual. The Owner will not establish the Completion Date until the completed Final Contract Payments Reporting Form has been received.

SECTION 1-09 MEASUREMENT AND PAYMENT

1-09.6 FORCE ACCOUNT

Delete this Section in its entirety and replace with the following:

***1-09.6 FORCE ACCOUNT (10-16-00)**

1-09.6(1) GENERAL (10-16-00)

The terms of the Contract or of a Change Order may call for work or Material to be paid for by force account. If so, then the objective of Section 1-09.6 is to reimburse the Contractor for all costs associated with force account work, including costs of labor, small tools, Supplies, Equipment, specialized services, Materials, applicable taxes and overhead and to include a profit commensurate with those costs. The amount to be paid shall be determined as specified in Sections 1-09.6(2) through and including 1-09.6(7).

1-09.6(2) LABOR (10-16-00)

Labor reimbursement calculations shall be based on a Contractor's "Project Labor List" (Contractor's List) prepared and submitted by the Contractor before the Contractor commences force account work (see "Contractor's Project Labor List" Form located in the appendix of the Project Manual). Once a Contractor's List is accepted by the Engineer, it shall be used to calculate force account labor payment until a requested revised Contractor's List is submitted and accepted. The Engineer may compare the Contractor's List to payrolls and other documents and may, at any time, request the Contractor to submit a revised Contractor's List. The Contractor may also submit a revised Contractor's List at any time for review and acceptance without such a request from the Engineer. Payment calculations made by the Engineer prior to acceptance of a revised Contractor's List shall not be adjusted as a result of a revised Contractor's List.
To be accepted, the Contractor's List must be accurate and meet the requirements of this Section 1-09.6(2). The Contractor's List shall include regular time rates and overtime rates for all employees (or work classifications) expected to participate in force account work. These rates shall include the basic wage and fringe benefits, the current rates for Federal Insurance Compensation (FICA), Federal Unemployment Tax Act (FUTA) and State Unemployment Tax Act (SUTA), the company's present rates for Medical Aid and Industrial Insurance premiums and the planned payments for travel and per diem compensation. These rates may also include an allocation of costs of safety and health testing. This allocation shall assure that the amount included for force account is reasonably proportional to the total costs applied to all Work.

In the event that an acceptable initial Contractor's List or requested revised Contractor's List is not received by the Engineer at the time that force account calculations are begun, the Engineer will develop an Engineer's "Project Labor List" (Engineer's List) unilaterally, utilizing the best data available, that will be used until an initial Contractor's List is received and accepted, or requested revised Contractor's List is received and accepted. Again, prior calculations prepared using the Engineer's List will not be revised as

a result of differences with not timely received either initial, or requested revised, acceptable Contractor's List.

The hourly rates established in the current accepted "Project Labor List" shall be applied to the hours of work recorded by the Engineer. The hours of work shall include all hours that are contractual obligations of the Contractor or are customary payments by the Contractor to all employees.

In addition to compensation for direct labor costs defined above, the Owner will pay the Contractor 26 percent of the sum of the costs calculated for labor reimbursement to cover Project overhead, general company overhead, profit, bonding, insurance, Business & Occupation tax, and any other costs incurred.

1-09.6(3) MATERIALS (10-16-00)

The Owner will reimburse invoice cost for Contractor-supplied "Materials". For the purpose of Section 1-09.6(3), "Materials" shall be Materials and Supplies as defined in Section 1-01.3 of the Standard Specifications. This cost shall include freight and handling charges and applicable taxes. Before force account work is started, the Engineer may require the Contractor to obtain multiple quotations for the "Materials" to be utilized and select the vendor with prices and terms most advantageous to the Owner.

The Engineer will provide a list of the types and quantities of Contractor-supplied "Materials" witnessed by the Engineer as being utilized in force account work. This list will be furnished promptly after the "Material" is incorporated or used, on a daily basis unless another time frame is mutually agreed upon. The Contractor may propose corrections to this list, shall provide prices for the "Materials" and other costs, and shall return the list to the Engineer. To support the prices and other costs, the Contractor shall attach valid copies of vendor invoices. If invoices are not available for "Materials" from the Contractor's stocks, the Contractor shall certify actual costs (at a reasonable level) by affidavit. The Engineer will review the prices and other costs, and any Contractor-proposed corrections and, if reasonable, approve the completed list. Once approved, the prices will be utilized in the calculation of force account reimbursement for "Materials".

If, in the case of non-invoiced "Materials" supported by Contractor affidavit, the price appears to be unreasonable, the Engineer will determine the cost for all or part of those "Materials", utilizing the best data available.

The Owner reserves the right to provide "Materials". In this case, the Contractor will receive no payment for any costs, overhead, or profit arising from the value of the "Materials" themselves. Additional costs to handle and place Owner furnished "Material" shall be compensated as described in Section 1-09.6.

In addition to compensation for direct "Materials" cost, the Owner will pay the Contractor 21 percent of the sum of the costs calculated for "Materials" reimbursement to cover Project overhead, general company overhead, profit, bonding, insurance, Business & Occupation tax, and any other costs incurred.

1-09.6(4) EQUIPMENT (10-16-00)

The Owner will reimburse the Contractor for the cost of Equipment utilized in the force account work. The Equipment provided by the Contractor shall be of modern design and in good working condition. For the purpose of Section 1-09.6(4), "provided" shall mean that the Equipment is owned (either through outright ownership or through a long-term lease) and operated by the Contractor or Subcontractor, or that the Equipment is rented and operated by the Contractor or Subcontractor. Equipment that is rented with operator shall not be included here, but shall be considered a service and addressed in accordance with Section 1-09.6(5).

The amount of payment for any Contractor-owned Equipment that is utilized shall be determined according to the version of the AGC/WSDOT Equipment Rental Agreement which is in effect at the time

the force account work is authorized. The rates listed in the Rental Rate Blue Book (as modified by the current AGC/WSDOT Equipment Rental Agreement) shall be full compensation for all fuel, oil, lubrication, ordinary repairs, maintenance, and all other costs incidental to furnishing and operating the Equipment except labor for operation.

Payment for rented Equipment will be made on the basis of a valid invoice, covering the time period of the force account work. Before this work is started, the Engineer may require the Contractor to obtain multiple quotations for the rental of Equipment to be utilized and select the vendor with prices and terms most advantageous to the Owner.

In addition to the payments for Contractor-owned and rented Equipment, one or more lump-sum payments may be made for small tools. The amount to be paid shall be determined as outlined in the AGC/WSDOT Equipment Rental Agreement.

The Owner will add 21 percent to Equipment costs to cover Project overhead, general company overhead, profit, bonding, insurance, Business & Occupation tax, and any other costs incurred. This markup will be over and above those Equipment costs and will not be adjusted for any Equipment overhead amounts included in the Blue Book rates.

Current copies of the Rental Rate Blue Book and the AGC/WSDOT Equipment Rental Agreement will be maintained by the Engineer, and are also available for inspection at each of the offices of the Associated General Contractors of America (in Seattle, Spokane, Tacoma, and Wilsonville, Oregon).

1-09.6(5) SERVICES (10-16-00)

Compensation under force account for specialized services shall be made on the basis of an invoice from the providing entity. A "specialized service" shall be one which is typically billed through invoice in standard industry practice. Before force account work is started, the Engineer may require the Contractor to obtain multiple quotations for the specialized service to be provided and select the provider with prices and terms most advantageous to the Owner.

Except as noted in the paragraph immediately below, the Owner will pay the Contractor an additional 21 percent of the sum of the costs included on invoices for specialized services to cover Project overhead, general company overhead, profit, bonding, insurance, Business & Occupation tax, and any other costs incurred.

When a provider of specialized services is compensated through invoice, but acts in the manner of a Subcontractor as described in Section 1-09.6(7), then markup for that invoice shall be in accordance with Section 1-09.6(7).

1-09.6(6) MOBILIZATION (10-16-00)

Force account mobilization is defined as the preparatory work performed by the Contractor including procurement, loading and transportation of tools and Equipment, and personal travel time (when such travel time is a contractual obligation of the Contractor or a customary payment for the Contractor to all employees). Mobilization also includes the costs incurred during demobilization. Pro-rata adjustments may be made when the mobilization applies to both force account and other Contract work. The Owner will pay for mobilization for off-site preparatory work for force account items provided that notice has been provided sufficiently in advance, as determined by the Engineer, to allow the Engineer to witness the off-site preparatory work, if desired.

Any costs experienced during mobilization activities for labor, Equipment, Materials, Supplies, or services shall be listed in those sections of the force account summary and paid accordingly.

1-09.6(7) CONTRACTOR MARKUP ON SUBCONTRACTOR'S WORK (10-16-00)

When work is performed on a force account basis by one or more approved Subcontractors, by lower-tier Subcontractors or Suppliers, or through invoice by firm(s) acting in the manner of a Subcontractor, the Contractor will be allowed an additional markup, from the table below, applied to the costs computed for work done by each Subcontractor in Sections 1-09.6(2) through and including 1-09.6(5), to compensate for all administrative costs, including Project overhead, general company overhead, profit, bonding, insurance, Business & Occupation tax, and any other costs incurred.

A firm may be considered to be acting as a Subcontractor when the Engineer observes one or more of the following characteristics:

1. The person in charge of the firm's activities takes an active role in managing the overall Project, including extensive coordination, interpretation of Drawings, interaction with the Owner or Engineer, or management of a complex and inter-related operation.
2. Rented Equipment is provided fueled, operated and maintained by the firm. Operators of rented Equipment are supervised directly by the firm's representative. There is little interaction between the Contractor and the employees of the firm.
3. The firm appears to be holding the risk of performance and quality of the work.
4. The firm appears to be responsible for liability arising from the work.

Markups on amounts paid for work performed by each Subcontractor on each force account and calculated through Sections 1-09.6(2) to and including 1-09.6(5):

On amounts up to $25,000	12%
On amounts equal to or greater than $25,000 up to $100,000	10%
On amounts equal to or greater than $100,000	7%

The amounts and markup rates shall be calculated separately for each Subcontractor on each force account item established.

The payments provided above shall be full payment for all work done on a force account basis. The calculated payment shall cover all expenses of every nature, kind, and description, including those listed above and any others incurred on the work being paid through force account. Nothing in Section 1-09.6 shall preclude the Contractor from seeking an extension of time or time-related damages to unchanged work arising as a result of the force account work. The amount and cost of any work to be paid by force account shall be computed by the Engineer, and the result shall be final as provided in Section 1-05.1.

An item which has been Bid at a Contract unit price or Contract lump sum price in the Bid will not be paid as force account unless a change as defined in Section 1-04.4 has occurred and the Specifications require a payment adjustment. Bid items which are included in the Bid Form as force account or which are added by Change Order as force account may, by agreement of the parties at any time, be converted to agreed Contract unit prices or Contract lump sum prices applicable to the remaining Work.*

1-09.7 MOBILIZATION (10-16-00)

Delete this Section and replace with the following:

*Mobilization consists of preconstruction expenses and the costs of preparatory work and operations performed by the Contractor which occur before 10 percent of the Awarded Contract Price is earned from other than mobilization Contract Bid items. Bid items which are not to be included in the Contract Bid item of Mobilization include but are not limited to:

1. Any portion of the Work covered by the specific Contract Bid item or incidental work which is to be included in a Contract Bid item or items.
2. Profit, interest on borrowed money, overhead, or management costs.
3. Any costs of mobilizing Equipment for force account work.

Based on the Contract lump sum price for "Mobilization," partial payments will be made as follows:

1. When 5 percent of the Awarded Contract Price is earned from other Contract Bid items, excluding amounts paid for Materials on hand, 50 percent of the amount Bid for mobilization, or 5 percent of the Awarded Contract Price, whichever is the least, will be paid.
2. When 10 percent of the Awarded Contract Price is earned from other Contract Bid items, excluding amounts paid for Materials on hand, 100 percent of the amount Bid for mobilization, or 10 percent of the Awarded Contract Price, whichever is the least, will be paid.
3. When the Physical Completion Date has been established for the Project, payment of any amount Bid remaining for mobilization in excess of 10 percent of the Awarded Contract Price will be paid.

Nothing herein shall be construed to limit or preclude partial payments otherwise provided by the Contract.*

The lump sum contract price for mobilization shall include all costs for the removal of existing plants and shrubs and no separate payment will be made.

DIVISION 2

EARTHWORK

SECTION 2-09 STRUCTURE EXCAVATION

2-09.5 PAYMENT

Supplement this section with the following:

Excavation work at Pump Station # 2 will be paid as "structural excavation".

SECTION 2-12 CONSTRUCTION GEOTEXTILE

2-12.5 PAYMENT (7-27-01)

Revise Item 6 "Construction Geotextile for Temporary Silt Fence" as follows:

Revise "per square yard." to read "per linear foot."

DIVISION 6

STRUCTURES

SECTION 6-02 CONCRETE STRUCTURES

6-02.5 PAYMENT

Supplement this section with the following:

All costs for the work required to provide and install structural steel and anchor bolts shall be considered incidental to the bid item, "Concrete Class (use)".

DIVISION 7

STORM DRAINS, CULVERTS, SANITARY AND COMBINED SEWERS, WATER MAINS AND RELATED STRUCTURES

SECTION 7-17 STORM DRAINS AND SANITARY SEWERS

7-17.3(2)K TEMPORARY SEWER BYPASS

Supplement this section with the following:

The Contractor shall provide for the bypass of effluent flow around the pump station #2 into the manhole of the 18" PSS – located north of S. Charles Street on Lakeside Ave. South.

7-17.5 PAYMENT (7-27-01)

Supplement pay item 3. with the following requirement:

h. Removal and disposal of existing pipe encountered in required trench excavation.

DIVISION 8

MISCELLANEOUS CONSTRUCTION

Section 8-02 Roadside Planting

8-02.2 Materials

Supplement this section with the following:

Conifer Trees shall be Chinese Juniper (Juniperus Chinensis).

Section 8-12 Chain Link Fence and Wire Fence

8-12.2 Materials

Supplement this section with the following:

Chain link fence and gates shall be installed with vinyl slats per section 9-16.6(7)B.

8-12.4 Measurement

Supplement this section with the following:

Chain link fence will be measured by the linear foot along the ground line regardless of height.

8-12.5 Payment

Supplement this section with the following:

At Pump Station # 2 – rotation of existing air vent shall be considered incidental to the construction of the chain link fence. The cost for vinyl slats shall be included in the contract price for chain link fence.

Section 8-33 Conduit and Trenching

8-33.3 Construction Requirements

Supplement this section with the following:

The work shall include obtaining electrical work permits from DCLU.

8-33.5 Payment

Supplement this section with the following:

5. **"Electrical Work",** per lump sum

The contract unit price for "Electrical Work" shall include all costs for the work required to furnish, install and test a complete generator and automatic transfer switch assembly at pump stations 2, 6 and 45 as shown on the drawings. This work shall include, but not be limited to, constructing and / or installing; conduit and wiring, wall penetrations for conduit runs, automatic transfer switches (supplied by owner), generators (supplied by owner), ground rods and castings, combination meter mains and connecting and testing all associated electrical wiring and appurtenances shown on the drawings and described in these specifications.

APPENDIX

SOIL DESCRIPTION

Surface Elevation: Approx.

Description	Depth, FT	Symbol	USCS	Samples	Blows / 6"	Lab Tests	Ground Water
Top soil	0		TP				
Loose, dark brown, fine to medium SILTY SAND, trace fine gravel; moist; scattered organics.	2		SM	1		GSD	
Medium dense, brown, fine to medium SILTY SAND; moist; scattered organics. (ESPERANCE SAND - disturbed)	4		SM	2			
Becomes dark brown, no organics.	6			3		GSD	
Becomes wet; few small gravel.	8			4			ATD
Increasing silt.	10			5		GSD	
Hard, brown-gray, LEAN CLAY; wet; scattered organics, rust staining. (LAWTON CLAY - disturbed)	12		CL	6		AL	
Bottom of boring at 12.5 ft. Boring backfilled with cuttings.	14		END				

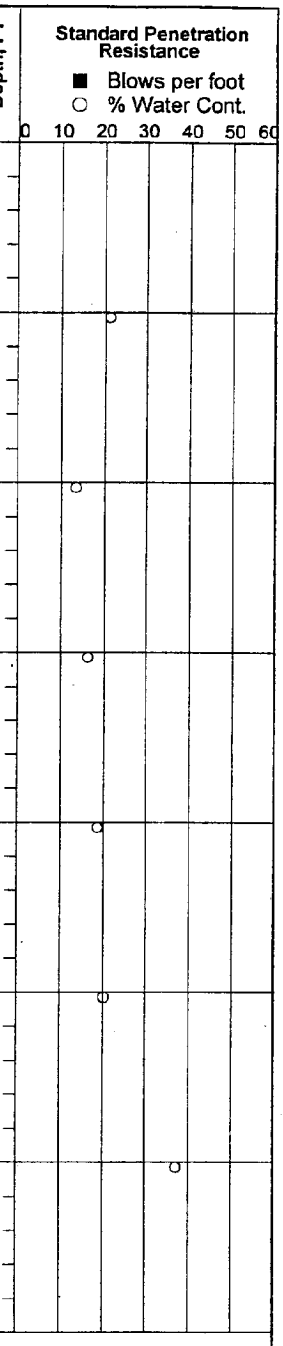

Location: Approx. 7 ft. above street elevation, 10 ft. south of railing.

PUMP STATION # 2

Date Completed: 01/18/01
Driller: Jeff, Jason, SPU Materials Lab
Equipment: 4-in. bit
Drilling Method: Hand Auger
Hammer System:

Pump Station Improvements Retaining Wall
Seattle, Washington

SEATTLE PUBLIC UTILITIES
MATERIALS LABORATORY

LOG OF BORING B-1-01

C3AA401 **FIGURE A- 1**

Logged by: JAF Reviewed by:

SUPPLIED BY OWNER - INSTALLED BY CONTRACTOR

Cummins Onan

Installation Manual

OTPC
Transfer Switch
40 to 3000 Amperes

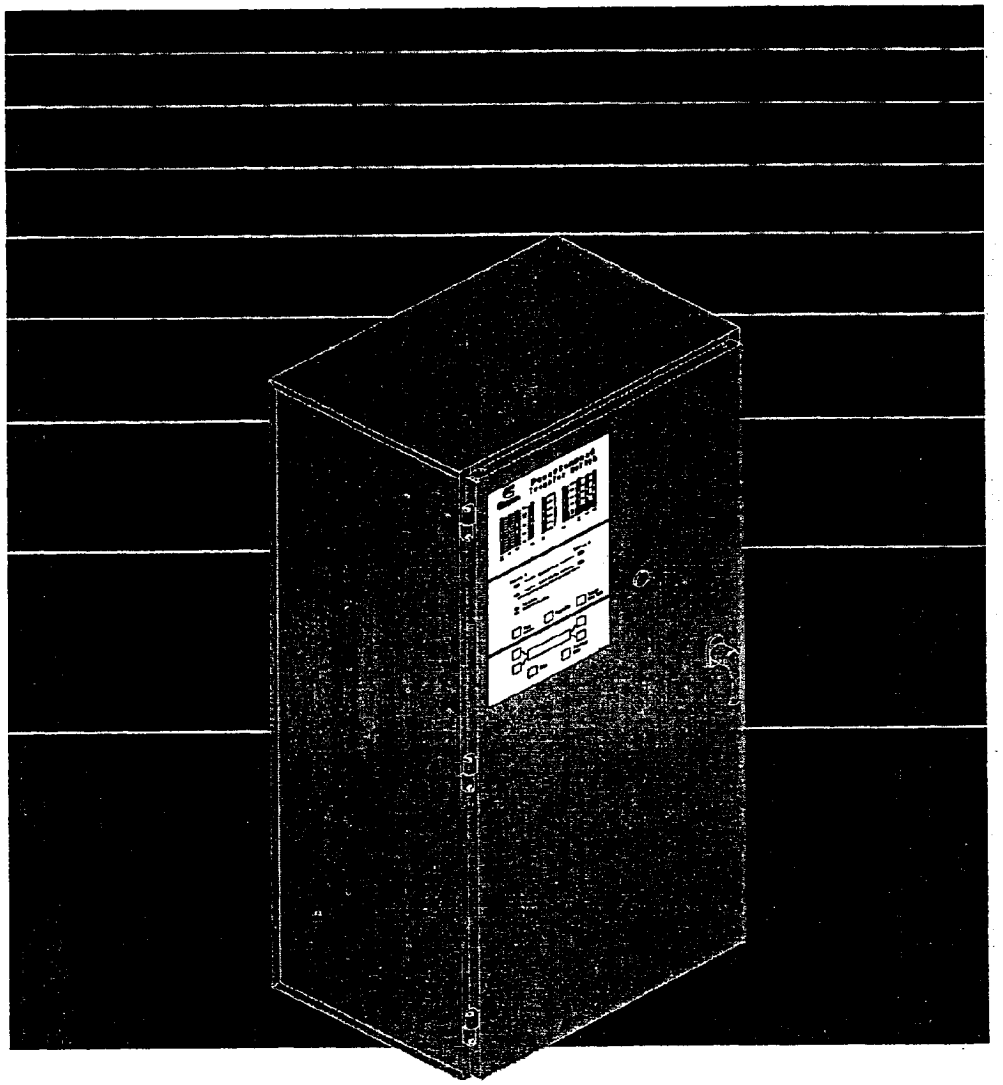

Printed in U. S. A.

962-0612
4-2000

KCSlip4 33996

SEA400543

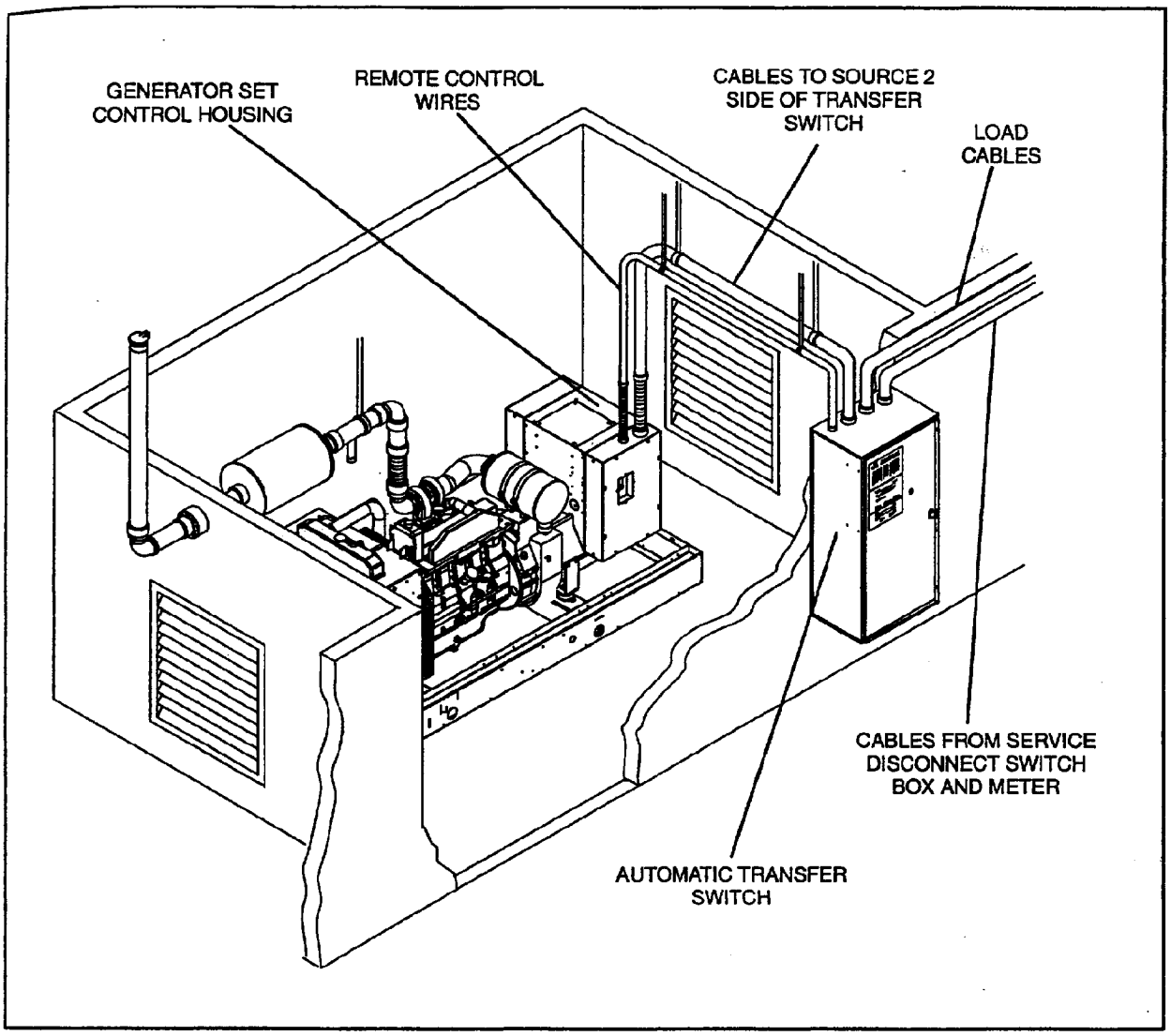

FIGURE 2-1. TYPICAL WALL-MOUNT INSTALLATION

KCSlip4 33997

SEA400544

TABLE 2-1. APPROXIMATE NEMA 1 CABINET DIMENSIONS

Switch Current Rating	Height	Width	Depth With Door		Weight
			Closed	Open	
40,70, & 125	27 in 686 mm	20.5 in 521 mm	12 in 305 mm	31.5 800 mm	82 lb 37 kg
150 & 225	35.5 in 902 mm	26 in 660 mm	16 in 406 mm	41 in 1042 mm	165 lb 75 kg
260	43.5 in 1105 mm	28.5 in 724 mm	16 in 406 mm	43 in 1093 mm	170 lb 77 kg
300, 400, & 600	54 in 1372 mm	25.5 in 648 mm	18 in 457 mm	42 in 1067mm	225 lb 102 kg
800 & 1000	68 in 1727 mm	30 in 762 mm	19.5 in 495 mm	48.5 in 1232 mm	360 lb 163 kg
1200	75.0 in 1905 mm	36.0 in 915 mm	21.5 in 546mm	54 in 1372 mm	625 lb 283 kg
1600 & 2000	90.0 in 2286 mm	36.0 in 915 mm	48 in 1219 mm	84 in 2134 mm	1100 lb 499 kg
3000	90.0 in 2286 mm	36.0 in 915 mm	48 in 1219 mm	84 in 2134 mm	1250 lb 567 kg

TABLE 2-2. APPROXIMATE NEMA 3R AND 4 CABINET DIMENSIONS

Switch Current Rating	Height	Width	Depth with Door		Weight
			Closed	Open	
40, 70, & 125	34 in 864 mm	26.5 in 673 mm	12.5 in 318 mm	36.5 in 927 mm	125 lb 57 kg
150 & 225	42.5 in 1080 mm	30.5 in 775 mm	16 in 406 mm	44 in 1118 mm	215 lb 97 kg
260	46 in 1168 mm	32 in 813 mm	16 in 406 mm	46 in 1168 mm	225 lb 102 kg
300, 400, & 600	59 in 1499 mm	27.5 in 699 mm	16.5 in 419 mm	41.5 in 1054 mm	275 lb 125 kg
800 & 1000	73.5 in 1867 mm	32.5 in 826 mm	19.5 in 495 mm	49.5 in 1257 mm	410 lb 186 kg
1200	75 in 1905 mm	36.0 in 915 mm	19.5 in 495mm	55 in 1397 mm	450 lb 204 kg
1600 & 2000	90 in 2286 mm	32.5 in 826 mm	51.0 in 1295 mm	79 in 2007 mm	1100 lb 499 kg
3000	90 in 2286 mm	38.0 965 mm	51.0 in 1296 mm	84.5 in 2146 mm	1250 lb 567 kg

KCSlip4 33998

SEA400545

SUPPLIED BY OWNER INSTALLED BY CONTRACTOR

Power Generation

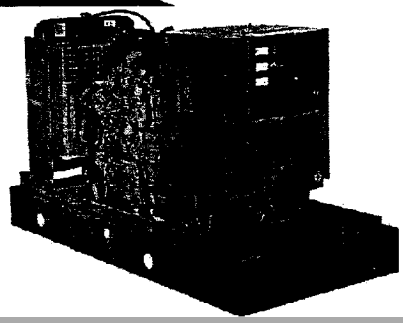

Diesel Generator Set
Model DGCA 60 Hz

50 kW, 63 kVA Standby
45 kW, 56 kVA Prime

(b)(4) copyright

© 2001 Cummins Power Generation

Specifications subject to change without notice

S-1113b

KCSlip4 33999

SEA400546

(b)(4) copyright

(b)(4) copyright

(b)(4) copyright

(b)(4) copyright

Exported on: Jan 12 2001 and is an Un-Controlled Document

0500_3175 D

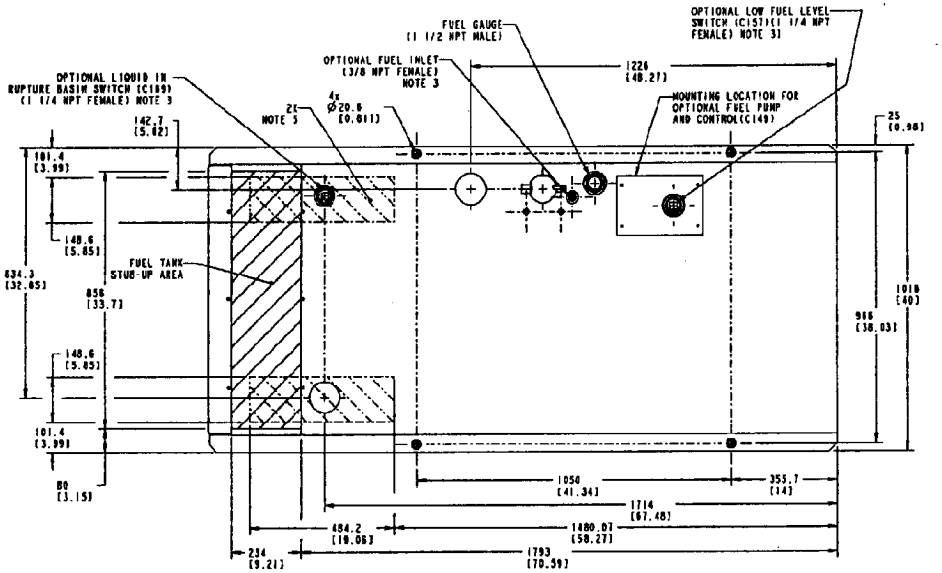

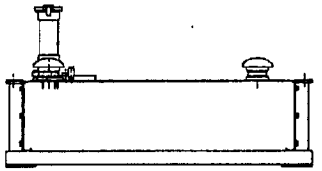

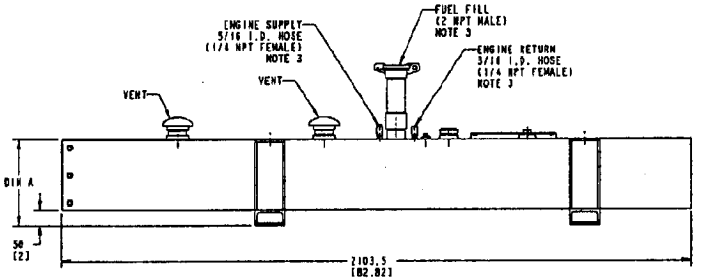

ID NO.	LTR	NO.	DESCRIPTION	QTY	INIT	CHKD	APPROVED	DATE
74849	A	1	FOUNDATION RELEASE	-	CSC	MEL	REE	11-20-95
74639	B	1	MODEL DGBB,BC,CA,CB WAS DGBC	20	CC	MB	BILLETT	06-17-97
75118	C	1	REV PER EE	-	CSC	MB	BILLETT	11-07-97
		2	REV SHEET 2	-	CSC	MB	BILLETT	11-07-97
76897	D	1	CHANGED FITTING OPTION FOR NRCA 50 Hz	20	CC	MAW	EEKER	07-22-98
76251	E	1	CHANGED PER EE *	-	RAC	MBG	BILLETT	12-08-98

NOTES:

1. TANKS ARE UL142 LISTED. SECONDARY CONTAINMENT GENERATOR BASE TANK. REFER TO TANK LABELS AND LOCAL CODE TO DETERMINE VENTING REQUIREMENTS FOR BOTH COMPARTMENTS.
2. SUBBASE FUEL TANK MOUNTING. EXCESSIVE TWISTING OF THE FUEL TANK, WHEN FASTENING IT TO A FOUNDATION, MAY RESULT IN STRUCTURAL FAILURE OF THE TANK. TO INSURE THE INSTALLATION DOES NOT EXCESSIVELY TWIST THE FUEL TANK, THE FOLLOWING PROCEDURE MUST BE OBSERVED:
   - 2.1 REFER TO ONAN APPLICATION MANUAL T030 FOR GENERAL SET MOUNTING GUIDELINES.
   - 2.2 AFTER PLACING SET ON FOUNDATION, TERAFF ALL FOUR MOUNTING PADS CONTACT FOUNDATION.
   - 2.3 THERE ARE 8 SHIMS (.0747 INCH THK) ATTACHED TO EACH FUEL TANK. THESE ARE INTENDED TO FILL ANY GAP BETWEEN THE MOUNTING PADS AND FOUNDATION. IF MORE SHIMS ARE REQUIRED OBTAIN ADDITIONAL P/N 159-1378 FUEL TANK SHIMS.
   - 2.4 INSERT THE MAXIMUM HEIGHT STACK OF SHIMS THAT WILL SLIDE INTO THE GAP.
   - 2.5 TIGHTEN TANK HOLD DOWN MOUNTING FASTENERS.
3. INDICATES PIPE SIZE OF INTERFACE PORT ON FUEL TANK FOR FEATURE OR OPTION INDICATED.
4. DIMENSIONS IN [ ] ARE IN INCHES.
5. THIS AREA INDICATES ELECTRICAL STUB-UP SPACE WITHIN THE GENERATOR SET SKIDBASE AS IDENTIFIED ON THE GENERATOR SET OUTLINE DRAWINGS. THE PORTION OF THIS AREA SHOWN OVERLAPPING THE FUEL TANK BODY IS ACCESSIBLE ONLY ABOVE THE TOP OF THE FUEL TANK.

FEATURE OPTION USE OF TANK		
MODEL	TANK	
	0159-1463	0159-1464
DGBB-60 Hz	C187	C188
DGBB-50 Hz	C188	-
DGBC-60 Hz	C187	C188
DGBC-50 Hz	C188	-
DGCA-60/50 Hz	C187	C188
DGCB-60/50 Hz	C187	C188

TABULATION						
FUEL TANK PART NO.	DIM A	VENT SIZE NOTE 3	TANK VOLUME-LITER (GAL)		DRY WEIGHT	
			NOMINAL	EFFECTIVE	kg	(lb)
0159-1463	285.72 [11.25]	2"NPT	284 [75]	265 [70]	227	[500]
0159-1464	487.02 [19.17]	3"NPT	549 [145]	530 [140]	295	[650]

CLASSIFICATION OF CHARACTERISTICS
CRITICAL
MAJOR
MINOR (NONE)
LINE BELOW SYMBOL APPLIES TO UPPER LIMIT
LINE ABOVE SYMBOL APPLIES TO LOWER LIMIT
NO LINE WITH SYMBOL APPLIES TO BOTH LIMITS
LET INSTRUCTION TAG TOLERANCE

APPROVED R.ENGELMANN
DATE 11-20-96

METRIC DWG
Pro/ENGINEER

DO NOT SCALE PRINT

C.CONTADI 11-20-96
S.MILIK 11-20-96
R.ENGELMANN 11-20-96

DGBB,BC,CA,CB

DUAL WALL SUBBASE FUEL TANK

Onan — Minneapolis, Minnesota 55432

OUTLINE-FUEL_TANK

0500_3175 1=2 D

KCSlip4 34004

SEA400551

Exported on: Jan 12 2001 and is an Un-Controlled Document

0500_3167 D

REV	QTY	ZONE	DESCRIPTION	ZONE	BY	CHK	APPROVED	DATE
73041	A	1	INTRODUCTION RELEASE		-	DAWERSON	REE	11-21-94
73824	B	1	ADD HOUSLD INFO,FC		ZA	DAWERSON	GILLETT	04-24-97
75718	C	1	REV PER ER		-	CSC	MM GILLETT	11-19-97
78547	D	1	REV PER ER		-	CSC	MM GILLETT	01-23-98

NOTE:

1. DIMENSIONS SHOWN IN [ ] ARE INCHES.
2. HOUSING AND MUFFLER WEIGHT: 428 kg [943 lbs]
3. HEIGHT INCREASE OF 14.6 [0.6] WHEN OPTIONAL SKID SOUND BARRIER IS USED.
4. THE CENTER OF GRAVITY (CG) OF THE GENERATOR SET WHEN EQUIPPED WITH THIS HOUSING SHIFTS APPROXIMATELY 77 [3.0] TOWARD RADIATOR END COMPARED TO THE EQUIVALENT NON-HOUSED PRODUCT WITH THE F179 SKID.
   SEE HOUSING READY SKID BASE OUTLINE DRAWING FOR CG LOCATION OF NON-HOUSED PRODUCT.

TABULATION

SKID BASE	DIM A	DIM B	DIM C
F179 (SHOWN)	1953 [76.9]	1823 [71.8]	224 [8.8]
F176	2093 [82.4]	1963 [77.3]	364 [14.3]

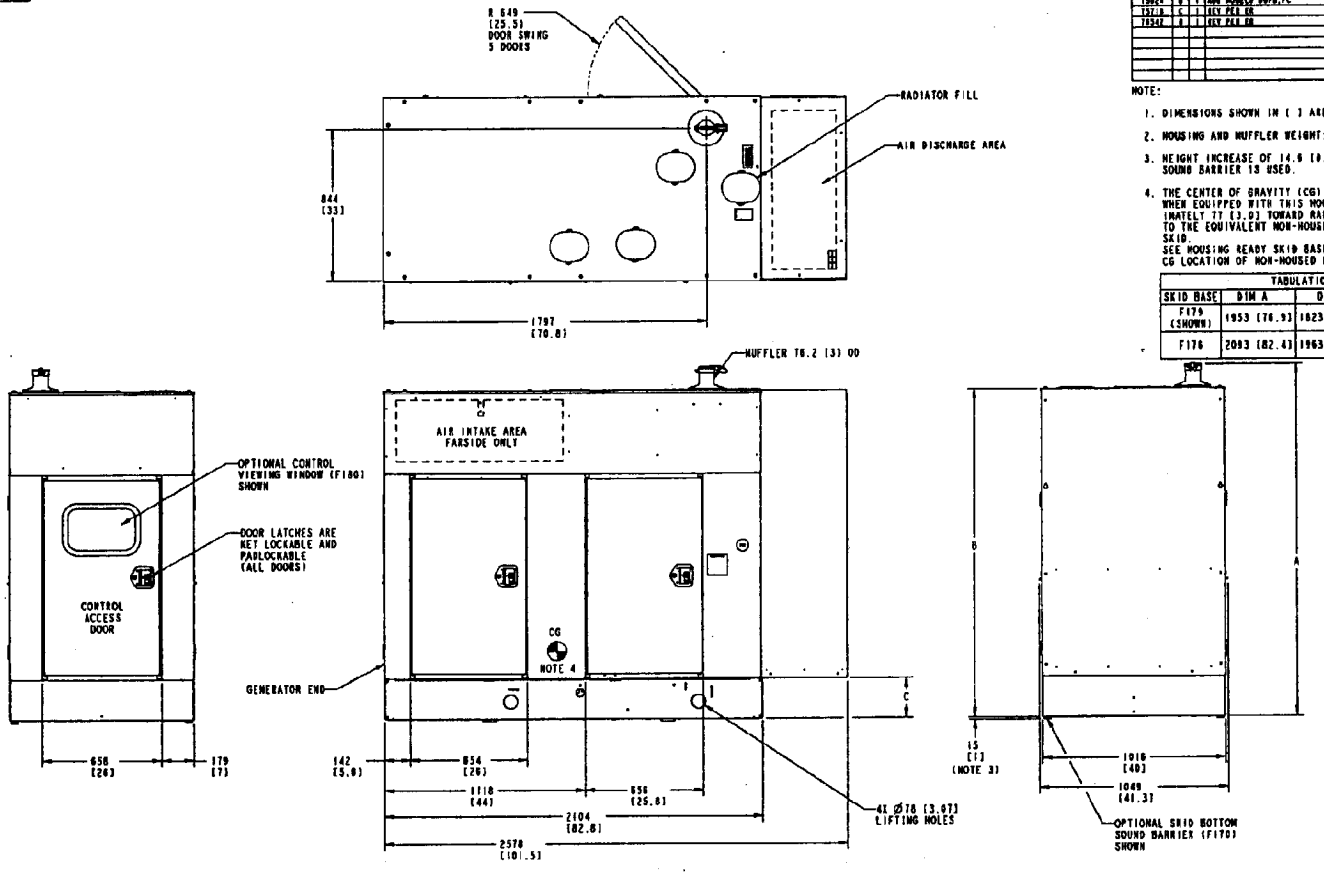

CLASSIFICATION OF CHARACTERISTICS
CRITICAL
MAJOR
MINOR (NONE)
LINE BELOW SYMBOL APPLIES TO UPPER LIMIT
LINE ABOVE SYMBOL APPLIES TO LOWER LIMIT
NO LINE WITH SYMBOL APPLIES TO BOTH LIMITS
KEY INSTRUCTION (NO TOLERANCE)

APPROVED D.ENGELMAN
DATE 11-21-94

METRIC CHG
Pro/ENGINEER

D.HOFMEISTER	11-21-94	
S.JULIE	11-21-94	
D.ENGELMANN	11-21-94	

MATERIAL: NONE, NC, CL, CI, CU, GCFB, FC

QUIET SITE II, SECOND STAGE

Minneapolis, Minnesota 55432

OUTLINE-ENCLOSURE (F173)

0500_3167 1:1 D

KCSlip4 34005

SEA400552

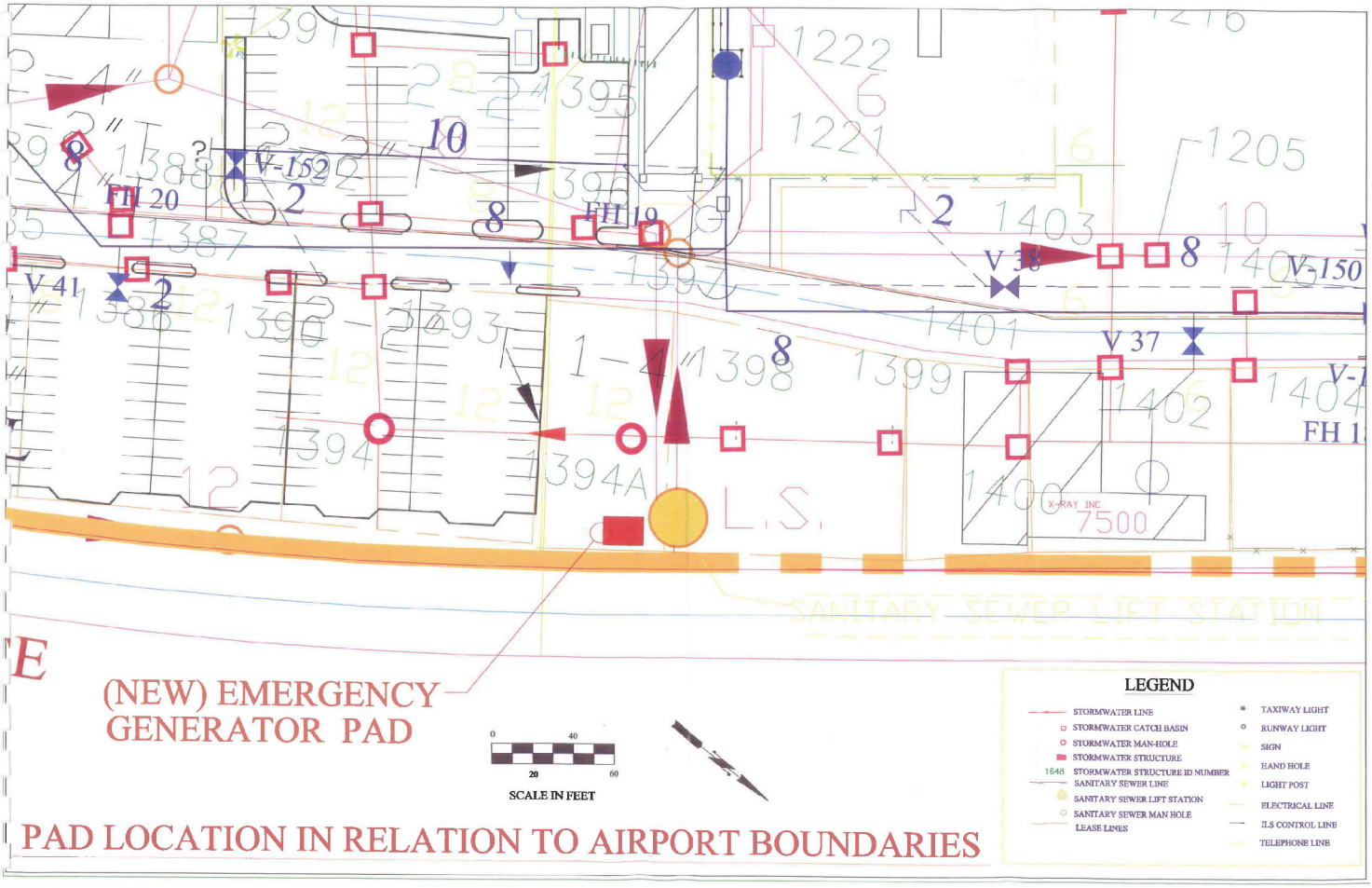

KCSlip434006

SEA400553

PRE-AWARD INFORMATION STATEMENT

(Please use additional sheets if necessary)

PROJECT NAME

_____

CONTRACTOR'S COMPANY NAME:

_____

CONTRACTOR'S ADDRESS/PHONE NO:

_____

➔ PART A: FIRM BACKGROUND

TYPE OF FIRM: ☐ CORPORATION ☐ PARTNERSHIP ☐ SOLE OWNERSHIP ☐ OTHER
(Explain "other" on a separate attached sheet)

1.01 **YEARS IN BUSINESS AS A CONTRACTOR:** _____

A. Prime Contractor _____ Years
B. Sub-Contractor _____ Years

1.02 **YEARS IN BUSINESS UNDER PRESENT NAME:** _____

Other or former names under which organization operated:

_____

_____

1.03 **CORPORATE STRUCTURE** (If a corporation, answer the following)

A. Incorporation Date _____

B. Incorporation State _____

C. President's Name _____

D. Vice-President's Name _____

E. Secretary's Name _____

F. Treasurer's Name _____

1.04 **PARTNERSHIP OR INDIVIDUAL** (If Partnership or Individual, answer the following):

A. Organization Date _____

B. Partnership Type ☐ General ☐ Limited

C. Names and Addresses of all Partners and Principals

_____

KCSlip4 34007

SEA400554

➔ PART B: WORK EXPERIENCE

1.05 SUMMARY

A. Work Completed: Please list typical contracts completed in last five years, similar to type and magnitude for which pre-award information is requested. Include dollar amount of work performed on subcontract work.

Year Complete	Proj. Name	Owner	Contract $ Amount	Prime or Subcontract	$ Amount of Work Performed

B. Work in Progress: List major construction contracts in progress. List project name, Owner, contract amount, cost of work performed with own forces, anticipated completion date.

C. References: Please furnish references we may contact concerning three of the projects listed in section 1.05A.

1. Trade References:

Name	Title	Address	Telephone #

2. Owner References

Name	Title	Address	Telephone #

D. Personal Experience: List construction experience of key individuals of your organization as relevant to this project.

1. Please list supervisory personnel employed by the Bidder and available for work on this project (project manager, principal foreman, superintendents and engineers

2. Furnish a detailed resume of the qualifications, previous employers and experience of the supervisory personnel listed who will be assigned to this project.

KCSlip4 34008

SEA400555

1.06 WORK PERFORMED

A. Type of Work Normally Performed by Own Forces:

_____

_____

_____

B. List all of the subcontractors you propose to employ for portions of this work. Indicate if WBE, MBE or DBE contractors.

Name/Address/WBE, MBE, DBE	Work /Percentage of Work

1.07 EQUIPMENT

A. Furnish list of equipment owned by the Bidder which is available for use on the proposed work as required:

Type of Equipment	Size or Capacity	Present Location

B. Furnish a list of the equipment the Bidder proposes to rent, lease, or purchase for this work:

Type of Equipment	Size or Capacity	Company Obtained From

➔ PART C: FINANCIAL BACKGROUND:

1.08 FINANCIAL INSTITUTIONS

A. Name of Bank _____ Branch _____

Address _____ Contact Person _____

Phone No. _____

KCSlip4 34009

SEA400556

B. Financial References

Name	Title	Address	Telephone #

1.09 BONDING COMPANY AND AGENT

A. Bonding Company: _____

B. Bonding Company Agent: _____

Address: _____

Telephone: _____

1.10 INSURANCE COMPANY AND AGENT:

A. Insurance Company: _____

B. Insurance Company Agent: _____

Address: _____

Telephone: _____

1.11 FINANCIAL STATEMENT:

A. Financial Statement, dated, and audited if available, for firm indicated on Page 1 of this form, and including:

1. Assets: Current, Fixed and Other.

2. Liabilities and Net Worth: Current, Long-Term, Net Worth.

3. A statement of changes in financial position from the previous 12 month period.

B. Assets:

1. Current: Cash, bid deposit checks, account receivable, notes receivable, costs in excess billings, inventories, marketable securities, prepaid expenses, and other current assets.

2. Fixed: Land, buildings, equipment, furniture and fixtures less accumulated depreciation, other fixed assets.

3. Other: Cash value of life insurance less loans, long-term investments, costs in excess of assets (subsidiary), and other assets.

C. Liabilities and Net Worth (Capital):

1. Current: Notes payable, accounts payable, accrued expenses, billings in excess of costs, real estate mortgages due within one year.

KCSlip4 34010

SEA400557

2. Long-Term: equipment and other notes payable (non-current), real estate mortgages (non-current), deferred taxes, and other long term liabilities.

3. Net Worth: Capital stock issued and outstanding (corporation), capital account (partnership or individual), additional paid in capital, and retained earnings.

D. Auditor:

1. Firm Name: _____

2. Individual's Name: _____

3. Address: _____

4. Telephone: _____

➔ PART D: LITIGATION BACKGROUND

1.12 PROJECT LIST: List all projects undertaken in the last five years which have resulted in partial of final settlement of the contract by arbitration or litigation in the courts:

Name of Client and Project	Contract Amount	Total Claims Arbitrated or Litigated	Amount Settlement of Claims

➔ PART E: SIGNATURE AND CERTIFICATION OF INFORMATION

The undersigned certifies that the information and data contained herein is correct and complete.

_____
Signature of Authorized Representative

_____
Printed Name of Authorized Representative

_____
Title

_____
Date

(Please use additional sheets if necessary)

KCSlip4 34011

SEA400558

TO THE CITY OF SEATTLE, WASHINGTON

CONTRACT BOND No. _____

KNOW ALL PERSONS BY THESE PRESENTS, That we, _____ _____as Principal, and _____, a corporation organized and existing under and by virtue of the laws of the State of _____ and legally doing business in the State of Washington, as Surety, are held and firmly bound and obligated unto The City of Seattle, a municipal corporation of the State of Washington, in the full and just sum of _____ _____ Dollars ($_____), lawful money of the United States, for the payment of which sum, well and truly to be made, we hereby bind ourselves, our heirs, executors, administrators, successors and assigns, jointly and severally, firmly by these presents:

THIS BOND is executed pursuant to RCW 39.08.010 through 39.08.080, inclusive, and is subject to all the provisions thereof and of the Charter of The City of Seattle insofar as the same is not in conflict with the laws of the State of Washington, and is entered into with said City for the use and benefit of said City, and also for the use and benefit of all laborers, mechanics, subcontractors, materialmen, and all persons who supply such person or persons, or subcontractors, with provisions or supplies for the carrying on of the work covered by the contract entered into on the _____day of _____, 20____, between the above named, undersigned, and bounden Principal, and The City of Seattle, for _____ _____as authorized by Ordinance _____ .

AND THE CONDITIONS OF THIS OBLIGATION ARE SUCH, That, if the above named Principal, shall faithfully perform said contract according to its terms, provisions, and stipulations, which contract by this reference is made a part hereof; and shall pay all laborers, mechanics, subcontractors and materialmen, and all persons who shall supply such person or persons, or subcontractors, with provisions anc supplies for carrying on of work under such contract; and shall pay all other just debts incurred in the performance of such work (provided, however, that the conditions of this obligation shall not apply to any money loaned or advanced to any such contractor or subcontractor, or other person, in the performance of such work); and shall comply with all requirements of the laws of the State of Washington and the Charter and ordinances of The City of Seattle and amendments thereto not in conflict with the laws of this State; and shall indemnify, defend, and hold the City harmless from claims, demands, liens and suits for the payment for labor, materials, supplies and equipment furnished for use in the performance of said contract, then this obligation shall be void; but otherwise it shall remain in full force and effect.

IT IS FURTHER ACKNOWLEDGED that nothing of any kind or nature whatsoever that will not discharge the Principal shall operate as a discharge or a release of liability of the Surety, any law, rule of equity or usage relating to the liability of sureties to the contrary notwithstanding. The Surety waives notice of any alteration or extension of time made by the City, except that any single or cumulative change orders amounting to more than 25% of the Awarded Contract Price shall require the consent of the Surety. The Surety consents to be bound by the laws of the State of Washington and subject to the jurisdiction of the courts of the State of Washington. The Surety and Principal acknowledge that no rider, amendment or other document modifies this Contract Bond except the following, which by reference is incorporated herein: _____ _____

Signed and sealed this _____day of _____, 20_____.

_____ Name of Surety	_____ Name(s) of Principal
By _____ Signature of Attorney-in-Fact	By _____ Signature of Authorized Representative of Principal
_____ Printed Name of Attorney-in-Fact	_____ Printed Name and Title of Principal's Authorized Representative
_____ Address of Attorney-in-Fact	_____

G:\...SPEC\Contract Bond—Revised 01.01.2001

The City of Seattle

SUBCONTRACTOR APPROVAL APPLICATION

1. To be completed by Contractor prior to a subcontractor beginning work on a project and forwarded to the Engineer/Architect for approval

Project Name	P.W. Project No.	Spec. No (if applicable)
Contractor Business Name		Telephone Number
Address City	State	Zip

I respectfully request approval of the following subcontractor on the subject project:

Subcontractor Business Name	Telephone Number	Seattle Business License No.
Address City	State	Zip
Washington State Registration No.	Estimated Start Date	Estimated Number of Working Days
Certification: ____MBE ____WBE ____MWBE ____CBE ____DBE ____Other	Amount of Subcontract	Type of Work

Projected Subcontractor Employees

OCCUPATIONS (List classifications of workers)	Total Employ		Total White		Total Minority		Black		Asian		Amer. Indian		His-panic	
	M	F	M	F	M	F	M	F	M	F	M	F	M	F
Managers														
Apprentices/Trainees														
TOTAL														

Prime Contractor's Signature	Date

2. To be completed by Administering Department with copies forwarded to agencies listed below

_____ Approve Subcontractor	_____ Disapprove Subcontractor (explanation attached)		
Authorized Signature	Title	Department	Date

cc: Enforcement Supervisor, Finance Division, Department of Finance 01-01-02
Public Works and Consultant Contracting Section (PWCC), Department of Finance 14-08-03
Contractor

G:\...\SPEC\Sub Approval.doc—Revised 01.01.2001

City of Seattle

Final Construction Contract Payments Reporting Form

(Form must be completed within 30 days after the Physical Completion Date of the project. The City of Seattle will not establish the Completion Date for the project until this completed form has been received. Please refer to Section 1-08.1(3) (APWA format) or Section 00700, 1.08D (CSI format) of your contract.)

PW#/Project Name:		
Contractor's Business Name		

Net Amount Paid to the Prime Contractor (Total amount paid to the contractor minus: 1.) the amount paid to subcontractors and suppliers and, 2.) sales tax paid to the contractor by the City)	$

List the business name of all subcontractors or suppliers providing $2,500 or more in work or materials on this Contract.	**Check if business is a SUPPLIER**	**Dollar Amount Paid** (minus sales tax, but including retainage to be paid)
	☐	$
	☐	$
	☐	$
	☐	$
	☐	$
	☐	$
	☐	$
	☐	$
	☐	$
	☐	$
	☐	$
	☐	$

Submitted by: (signature)

Name	**Title**	**Date Signed**

File: g:\PWCC\Documents\Completion\Final_Contract_Pmt_frm
Form Revised: 11/7/2001

700 Third Avenue, Room 800, Seattle, WA. 98104-1808
Tel: (206) 684-0430, TDD: (206) 233-7810, Fax: (206) 684-4511. http:/www.ci.seattle.wa.us
An equal opportunity, affirmative action employer. Accommodations for persons with disabilities provided upon request

EQUAL BENEFITS COMPLIANCE DECLARATION

CONSTRUCTION

All City of Seattle contractors required to comply with Seattle Municipal Code Chapter 20.45 and related rules must complete both pages of this Equal Benefits Compliance Declaration. *Please Note:* No City contract can be awarded until the contractor has completed this Declaration and submitted it to

City of Seattle – Construction & Consultant Contracting Division, 700 3rd Ave., #800, Seattle, WA 98104

SECTION 1: Contractor Information

Name of Contractor: _____ Contact Person: _____

Phone Number: _____ Fax: _____ E-mail: _____

Approximate Number of Employees in the U.S.: _____ Project PW#: _____

SECTION 2: Compliance with SMC Ch. 20.45 and related rules

1. Does the contractor have any employees? ☐ **YES** ☐ **NO**

   If the answer to Question 1 is "NO", the contractor qualifies for **Option C** on Page 2 of this Declaration.

   If the answer to Question 1 is "YES", continue to Question 2.

2. a. Does the contractor provide, or offer access to, any benefits to employees or to the spouses of employees? *
   ☐ **YES** ☐ **NO**

   b. Does the contractor provide, or offer access to, any benefits to employees or to the domestic partners of employees? *
   ☐ **YES** ☐ **NO**

   * (Please note: for 2(a) and (b), the answer must be "YES" even if the employees must pay for some or all of the cost of spousal or domestic partner benefits)

   If the answers to both Questions 2(a) and 2(b) are "NO", the contractor qualifies for **Option B** on Page 2 of this Declaration.

   If the answer to either Question 2(a) or 2(b) is "YES", continue to Question 3.

3. BENEFITS PROVIDED

   If the contractor provides, or offers access to, any employee benefit, please indicate so on the list below. This list is not intended to be exhaustive. If the contractor provides equal benefits, for each "Yes" marked in one column, there should be a corresponding "Yes" marked in the other column (and for each "No" there should be a "No"). Some types of employee benefits flow directly to the spouse/domestic partner (e.g. health insurance) and others are given directly to the employee (e.g. family leave to care for a sick spouse/domestic partner). For the purposes of this chart, both types of benefits qualify as "For Spouses" or "For Domestic Partners".

EMPLOYEE BENEFIT	FOR SPOUSES	FOR DOMESTIC PARTNERS
Health Care	☐ Yes ☐ No	☐ Yes ☐ No
Dental Care	☐ Yes ☐ No	☐ Yes ☐ No
Vision Care	☐ Yes ☐ No	☐ Yes ☐ No
Pension	☐ Yes ☐ No	☐ Yes ☐ No
Bereavement Leave	☐ Yes ☐ No	☐ Yes ☐ No
Family Leave	☐ Yes ☐ No	☐ Yes ☐ No
Parental Leave	☐ Yes ☐ No	☐ Yes ☐ No
Employee Assistance Programs	☐ Yes ☐ No	☐ Yes ☐ No
Relocation and Travel	☐ Yes ☐ No	☐ Yes ☐ No
Contractor discounts, facilities, events	☐ Yes ☐ No	☐ Yes ☐ No
Credit Union	☐ Yes ☐ No	☐ Yes ☐ No
Child Care	☐ Yes ☐ No	☐ Yes ☐ No
Other *(please specify)*:	☐ Yes ☐ No	☐ Yes ☐ No
Other *(please specify)*:	☐ Yes ☐ No	☐ Yes ☐ No

If the answers to Question 3 indicate that the contractor provides equal benefits, the contractor will be in compliance with SMC Ch. 20.45 and related rules and qualifies for **Option A** on Page 2 of this Declaration.

If in response to Question 3 for any listed benefit both a "YES" and a "NO" answer have been given, the contractor DOES NOT provide equal benefits, and the contractor is not in compliance with SMC Ch. 20.45 and related rules. Please contact the City's Contracting Services Division to determine if the contractor qualifies for Reasonable Measures or Substantial Compliance Authorization (See, Equal Benefits Program Rules, Sections 11 and 12, respectively).

THE CITY OF SEATTLE

CITY CONTRACTS – NON-DISCRIMINATION IN BENEFITS (SMC Ch. 20.45)

Please Note: No City contract can be awarded until the contractor has completed **both pages** of this Declaration and submitted it to the City (*address below*)

EQUAL BENEFITS COMPLIANCE DECLARATION

I, _____ on behalf of _____
(name) *(contractor name)*

declare that said Contractor complies with Seattle Municipal Code Chapter 20.45 and related rules by:

*(Choose **ONE** of the following):*

Option A
☐ Offering equal benefits, as defined by SMC Ch. 20.45 and related rules, to its employees with spouses and its employees with domestic partners.

Option B
☐ Offering benefits neither to the spouses nor to the domestic partners of its employees.

Option C
☐ Having no employees.

Option D
☐ Having received authorization from the City's Contracting Services Division to delay implementation of equal benefits *(Substantial Compliance Authorization).*

Option E
☐ Having received authorization from the City's Contracting Services Division to provide a cash equivalent payment to eligible employees, in lieu of equal benefits *(Reasonable Measures Authorization).*

I declare under penalty of perjury under the laws of the State of Washington that the foregoing is true and correct, and that I am authorized to bind this entity contractually.

Executed this _____ day of _____, 20_____, at _____, _____.
(City) *(State)*

_____ _____
Signature Name *(please print)*

_____ _____
Title Contractor Tax Identification Number

REQUEST FOR APPROVAL OF MATERIAL SOURCES

SF # _____ Date: _____

Project No. _____

Project Name: _____

Bid		Source of Supply		Approval
Item #	Description of Material	Local Supplier	Manufacturer's Brand or Pit #	Action *

Contractor:	Submitted by:

Seattle Engineering Department Materials Laboratory Use Only

* Sources of supply for all items checked (√) in approval column are approved for use on the above improvement provided the materials delivered comply with all specifications. Actions on items indicated by number in the approval column is identified per the following code:

1. Approval withheld; submit samples for preliminary evaluation.
2. Approval withheld; submit brand name, name of manufacturer, or treating plant.
3. Approval withheld; submit Transportation Department pit number (if known) and legal description.
4. Approval withheld; please submit catalog cuts and/or shop drawings.
5. Approval withheld;

Date: _____ By: _____
Materials Engineer

I, _____, have reviewed the above items and ( ) concur, ( ) do not concur (attach comments)

Note: Forms not filled in completely will not be processed.

City of Seattle

Paul Schell, Mayor

Seattle Public Utilities
Diana Gale, Director

Contractor's Shop Drawing Review & Approval Request

Date:
To: Construction Administration Section, Seattle Public Utilities
From:
Contract: **PW #:**

Bid Items:
Drawing Sheet #(s):
Material Standard (ASTM, AWWA, etc.):
Location/Intended Use:

Deviations from contract requirements and / or Standard Plans:

<<Enter Deviations here>>

This is to certify that the Contractor has reviewed and approved the Shop Drawing #(s) to for accuracy, completeness, and compliance with the Contract requirements:

Contractor's signature Date

Contractor's Name and Address:

Note: One Shop Drawing Review Form shall be submitted for each shop drawing submittal package.

SEATTLE PUBLIC UTILITIES

RECYCLING & DISPOSAL STATION

WASTE RULES

APRIL 1998

RATES

On your way into the station, please tell the scale attendant what you are dumping, and be prepared to have your load inspected.

Recyclables

Any vehicle delivering only clean, contaminant free recyclables - No charge

Garbage

Garbage generated within the City of Seattle only.

Passenger vehicles - $ 8.50 per trip

Non-passenger vehicles (trucks, motor homes, travel-alls, commercial vehicles) and passenger vehicles with trailers - $ 93.65 per ton, $ 15.50 minimum charge

Television sets, VCRs, stereo components, microwave ovens, and mattresses and box springs are accepted as garbage.

Clean Yard Waste

See Yard Waste section for more information.

Passenger vehicles - $ 6.50 per trip

Non-passenger vehicles (trucks, motor homes, travel-alls, commercial vehicles) and passenger vehicles with trailers - $ 68.70 per ton, $ 10.75 minimum charge

Clean Wood Waste

See Wood Waste section for more information.
Mixed loads of wood waste & garbage will be charged the garbage rate.

Passenger vehicles - $ 4.50 per trip

Non-passenger vehicles (trucks, motor homes, travel-alls, commercial vehicles) and passenger vehicles with trailers - $ 48.05 per ton, $ 6.25 minimum charge

Vehicle Tires

Four tires per load maximum.
Loads of tires & garbage will be charged the garbage rate.

Tires only - $ 7.75 per load

Large Appliances

Stoves, refrigerators, freezers, air-conditioners, washers, dryers, hot water heaters with insulation, and other large home appliances.

Refrigerators & freezers must be empty - no food, garbage, hazardous waste. Two appliances per load maximum, City of Seattle residents only.

Appliances only - $ 15.25 per appliance.

Non-passenger vehicles disposing of appliances & garbage, or yard waste, or wood waste - $ 5.40 per appliance plus the tonnage rate.

Unsecured Loads

Loads must be covered and/or securely tied down so that nothing can fall out of the vehicle; there is a fee for unsecured or uncovered loads.

Passenger vehicles - $ 3.00

Non-passenger vehicles (trucks, motor homes, travel-alls, commercial vehicles) and passenger vehicles with trailers -
$ 5.00 if load weighs under one ton
$ 10.00 if load weighs more than one ton

Household Hazardous Waste

Household hazardous waste may be disposed of at one of the City's Haz Sites; the Recycling & Disposal Stations do not accept hazardous waste.

Passenger, and other non-commercial vehicles, delivering only household hazardous waste - No charge

Non-household generated hazardous waste will not be accepted.

LOCATIONS & HOURS

Summer Hours effective April 5, 1998

North Recycling & Disposal Station

1350 N 34th St. (N 34th St. & Carr PL N) - Fremont/Wallingford area

Monday - Friday	8:00 a.m. - 5:30 p.m.
Saturday	8:00 a.m. - 7:00 p.m.
Sunday	9:00 a.m. - 6:00 p.m.

South Recycling & Disposal Station

8100 Second Ave S - South Park area

Monday - Friday	8:00 a.m. - 5:30 p.m.
Saturday	8:00 a.m. - 7:00 p.m.
Sunday	9:00 a.m. - 6:00 p.m.

South Haz Site

8100 Second Ave S - Use the South Recycling & Disposal Station entrance. The site is open Thursday, Friday, and Saturday, 10:00 a.m. to 4:00 p.m. Call the Hazards Line for restrictions - 296-4692, 9:00 a.m. to 4:30 p.m. Monday through Friday.

Aurora Haz Site

The site is open Sunday, Monday, and Tuesday, 10:00 a.m. to 4:00 p.m. Drop off is by appointment only. Call the Hazards Line for an appointment, the location, and restrictions - 296-4692, 9:00 a.m. to 4:30 p.m. Monday through Friday.

RECYCLABLES

No Charge

- **Aluminum cans** - No aluminum foil.
- **Bicycles**
- **Cardboard** - Remove packing material and flatten; staples and tape are okay. No waxed cardboard, or cardboard stained with food or grease.
- **Glass bottles and jars** - Separate by color, remove lids and rinse. No window glass, drinking glasses, or dishes.
- **Hot water heaters** - All interior and exterior insulation removed.
- **Lawn mowers**
- **Mixed paper** - Includes magazines, junk mail, paperback books, etc. No waxed or coated paper, and no paper with food on it.
- **Motor Oil, used** - Five gallon limit per trip. Must not be contaminated with solvents, bleach, or other wastes.
- **Newspaper**
- **Oil filters, used** - Limit of two drained oil filters per day.
- **Plastic bottles with a 1 or 2 on the bottom.** - Remove lids, rinse, and flatten. No black, grey, brown, or other dark colored bottles. No bottles that contained any hazardous substance - motor oil, pesticides, etc. No tubs - yogurt, margarine, etc. No plastic bags.
- **Scrap metal** - This includes copper, wire hangers, cast iron, etc. No wrapped pipe, propane or oil tanks, or pressurized containers. Steel drums that held hazardous waste must be steam cleaned.
- **Tin cans** - Rinse; no loose lids.
- **Vehicle batteries** - No alkaline batteries, or other household batteries.

PHONE NUMBERS

Recycling & Disposal Station Billing and Information	386-9790
Solid Waste Residential Customer Service	684-7600
TDD	233-7913
Illegal Dumping & Graffiti Hotline	684-PKUP
Hazardous Waste Disposal Information	
Households	296-4692
Businesses	296-3976
Puget Sound Air Pollution Control (asbestos disposal information)	343-8800

KCSlip4 34019

SEA400566

Solid Waste Web Site:
http://199.174.51.22/seattle/util/sw/swindex.htm

YARD WASTE (CLEAN GREEN)

Acceptable Materials

- **Branches** - Up to four inches in diameter and eight feet in length.
- **Brush**
- **Grass clippings**
- **Houseplants**
- **Leaves**
- **Prunings**
- **Rocks** - Two inches or less in diameter.
- **Sod** - No loose dirt.
- **Weeds**

Unacceptable Materials

These materials must be disposed of as garbage.

- **Asphalt, concrete, cement**
- **Bricks**
- **Food waste**
- **Household garbage** and/or **trash**
- **Plastic bags** - Customers must empty plastic bags.
- **Rocks** - Over two inches in diameter.
- **Soil/Dirt** - Contaminated soil must be accompanied by a Waste Clearance Form (see Clearance Waste section).
- **Stumps** - (see Wood Waste section).
- Other things that don't grow in the garden - **hoses, tags, pots, fencing, metal** (can be recycled), **plastic plants**, etc.

Other Yard Waste Information

- Customers may bring in mixed loads of garbage and yard waste, **only** if the loads can easily be separated with one stop at the garbage pit and one at the yard waste stall.
- Mixed loads that cannot be separated will be turned away.
- A load of garbage with a small amount of yard waste, such as a load of dirt with a few leaves mixed in, will be accepted as garbage.

WOOD WASTE (CLEAN WOOD)

Acceptable Materials

- **Cedar shingles** - No tar paper.
- **Lath** - No plaster.
- **Pallets**
- **Tree limbs and stumps** - Between four and eight inches in diameter, and no more than eight feet in length.
- **Unpainted plywood, oriented strandboard (OSB), and particleboard**
- **Untreated, unpainted lumber**

Nails and staples are acceptable.

Unacceptable Materials

- **Non-wood construction materials** - Must be disposed of as garbage.
- **Painted wood** - Must be disposed of as garbage.
- **Treated wood** - Wood treated with preservatives such as creosote, pentachlorophenol, copper napthenate, chromium arsenate compounds, or chlordane, must be disposed of as garbage.
- Large loads of treated wood must be accompanied by a Waste Clearance Form (see Clearance Waste section).
- **Yard waste/Clean Green** (see Yard Waste section).

CLEARANCE WASTE

Clearance Waste is material that may be dangerous or hazardous, or has a make-up which is unknown, and may be Unacceptable Waste.

The following materials are acceptable, if accompanied by an approved Waste Clearance Form from the Health Department,: call 296-4633 for information.

- **Contaminated soil**
- **Fluorescent lights** - large amounts
- **Grease traps**
- **Grit**
- **Incinerator ash**
- **Infectious waste, treated**
- **Sludge**
- **Treated wood** - large amounts

HOUSEHOLD HAZARDOUS WASTE

For additional information call the Hazards Line at 296-4692.

Acceptable Materials

- **Antifreeze**
- **Brake fluid**
- **Corrosive chemicals** - such as lye and muriatic acid
- **Drain cleaners**
- **Fertilizer**
- **Gasoline**
- **Herbicides**
- **Hobby chemicals** - from crafts, photography, and lab sets
- **Paint thinner**
- **Paint**
- **Pesticides** - insect sprays, flea powder, etc.
- **Rust removers**
- **Swimming pool chemicals** - such as chlorine
- **Wood preservative**

Unacceptable Materials

- **Asbestos** - Call PSAPCA at 343-8800.
- **Business generated hazardous waste** - Call the Business Waste Hotline at 296-3976.
- **Explosives, ammunition, weapons** - Call 911.
- **Radioactive waste** - Call 911.

GARBAGE RESTRICTIONS

- **Ashes** - Must be completely cooled, and bagged, boxed or wetted.
- **Barrels/drums** - Empty barrels and drums must be cut in two, or have at least one end removed, or be crushed, to be accepted as garbage.
- **Carpet rolls** - Ask the floor attendant for unloading instructions.
- **Dusty materials** - Sawdust, etc. must be bagged, boxed or wetted.
- **Excrement - Residential waste only**. Animal excrement, disposable diapers, etc. must be in a leak proof container, such as double plastic bagged and securely tied.
- **Logs, poles**, etc. - Must not exceed eight feet in length.
- **Net** - Fishing net, etc., ask the floor attendant for unloading instructions.
- **Rocks, rubble, slabs** - Must not exceed 200 pounds and/or two cubic feet per piece.
- **Rope/Line** - Ask the floor attendant for unloading instructions.
- **Yard waste** - May not be disposed of as garbage.

UNACCEPTABLE MATERIALS

These materials are <u>not</u> accepted at the Recycling & Disposal Stations.

- **Asbestos** - Call PSAPCA at 343-8800.
- **Dead animals over 15 pounds** - Call Animal Control at 386-4254.
- **Explosives, ammunition, weapons** - Call 911.
- **Fuel tanks/Oil tanks** - See the Yellow Pages under <u>Tanks-Cleaning</u> or <u>Tanks-Removal</u>.
- **Furnaces, furnace parts, ducting, and boilers** - Call PSAPCA at 343-8800 for information on disposing of heating systems.
  Some scrap yards accept asbestos free heating systems. See the Yellow Pages under <u>Scrap Metal-Process & Recycle</u>.
- **Hazardous Waste** - Must be disposed of at a special facility.
  Households - See Household Hazardous Waste Section.
  Businesses - Call the Business Waste Hotline at 296-3976.
- **Hot ashes** - Must be cooled, then bagged, boxed or wetted.
- **Infectious Waste, untreated** - Call the Health Department at 296-4831.
- **Radioactive waste** - Call 911.
- **Sealed drums and barrels**
- **Sewage** - Call the Health Department at 296-4632.
- **Materials over eight feet in length or 200 pounds per piece**.

SHARPS (Hypodermic Needles & Syringes)

- Accepted at no charge, subject to the following restrictions:
  - City of Seattle, household customers only.

- Sharps must be contained in a rigid container, such as a plastic milk jug, with the lid securely fastened.
- One gallon container limit per trip.

- For information on other household sharps disposal options in Seattle, call 684-7600 and request a "Sharps" brochure.
- For information on the disposal of business generated sharps call the Health Department at 296-4831.

SEATTLE-KING COUNTY WASTE CHARACTERIZATION FORM

Please Print in Ink or Type

Instructions For Completing This Form Are Attached.

Waste Characterization #_____

Initial_____ Renewal _____ Previous#_____

A. WASTE GENERATOR INFORMATION

1. Generator Name:_____ Fax #:_____
2. Generator Contact:_____ Phone #: ( )_____
3. EPA Identification Number:_____ 4. SIC Code:_____
5. Generator Address (site of waste generation):_____City:_____
6. Generator Mailing Address: _____

City:_____ State:_____Zip Code: _____

B. CONSULTANT INFORMATION (*If Applicable*)

1. Consultant Company:_____ Fax #:_____
2. Consultant Contact: _____ Phone #: ( )_____
3. Consultant Address: _____

City:_____ State:_____ Zip Code:_____

C. TRANSPORTATION INFORMATION

1. Transporter Company:_____ Fax #:_____
2. Transporter Contact: _____ Phone #: ( )_____
3. Transporter Address: _____

City:_____ State:_____ Zip Code:_____

4. Waste Packaging: ☐ Drum ☐ Bulk Solid ☐ Other: _____
5. Is this a DOT hazardous material? ☐ No ☐ Yes

D. WASTE STREAM INFORMATION (*See Instructions*)

1. Name of Waste: _____
2. Process Generating Waste:_____
3. Annual Amount in pounds or tons:_____ Estimated Amount per delivery:_____
4. Frequency of Disposal: ☐ One time only ☐ Weekly ☐ Monthly ☐ Other: _____
5. Special Handling Instructions/Supplemental Information:_____

_____

_____

DO NOT WRITE BELOW THIS LINE

WASTE CHARACTERIZATION FORM

Please Print in Ink or Type

E. PHYSICAL CHARACTERISTICS OF WASTE (*See Instructions*)

1. Color:_____

2. Does the waste have a strong incidental odor? ❑ No ❑ Yes, if so, describe: _____

3. Physical State @ 70°F/21°C: ❑Solid ❑ Liquid ❑ Semi-Solid ❑ Powder ❑ Other: _____

4. Free Liquids: ❑Yes ❑ No Volume_____%

5. pH: ❑≤2 ❑> 2-4 ❑ 4-7 ❑ 7 ❑ 7-10 ❑ 10- <12.5 ❑ ≥12.5 ❑ NA

6. **Flash Point:** ❑ NA ❑ <140°F/60°C ❑ 140-199°F/60-93°C ❑ ≥200°F/93°C
   Method: ❑ Closed Cup ❑ Open Cup

F. CHEMICAL COMPOSITION

	RANGE (MIN-MAX)
_____	_____-_____%
_____	_____-_____%
_____	_____-_____%
_____	_____-_____%
_____	_____-_____%
_____	_____-_____%
_____	_____-_____%
_____	_____-_____%
_____	_____-_____%
Total:	_____%

2. Does the waste contain any of the following? (provide concentration if known):

	NO or	LESS THAN or	ACTUAL
PCBs	❑	❑ <50 ppm	_____ppm
Cyanides	❑	❑ <30 ppm	_____ppm
Sulfides	❑	❑ <500 ppm	_____ppm

Please note: The Chemical composition identification should include, any constituents that may be present in the waste. The total composition must be greater than or equal to 100% (.0001% = 1 ppm or 1 mg/l). Attach analytical results, MSDS's or other reports.

3. Indicate method used to determine composition: ❑ analytical data ❑ MSDs ❑ other: _____

G. SAMPLING INFORMATION (*If Applicable*)

1. Source of Sample (eg. drum, stockpile, sump/catch basin; tank) _____

2. Sampling Method: ❑ composite ❑ discrete/grab ❑ other: _____

3. Number of samples:_____
   Please note: Attach completed Chain of Custody form (if used).

H. GENERATOR CERTIFICATION

By signing this Waste Characterization Form, the Generator certifies:

1. This waste is not a "Hazardous Waste" as defined by USEPA and/or the state.
2. This waste does not contain regulated radioactive materials or regulated concentrations of PCBs (Polychlorinated Biphenyls).
3. All information provided is a true and accurate description of the waste material. All relevant information regarding known or suspected hazards in the possession of the Generator has been disclosed.
4. This waste complies with the regulations of the Seattle-King County Department of Public Health and the local solid waste division.
5. The analytical data presented herein, attached hereto, or otherwise submitted for the purpose of completing or supplementing any or all of the information on this form were derived from testing a representative sample taken in accordance with 40 CFR 261.20(c) or equivalent rules.
6. If any changes occur in the character of the waste (e.g., physical characteristics, chemical composition, process of generation, etc.), the Generator shall notify the Seattle-King County Department of Public Health.

7. Signature:_____ 8. Title: _____
9. Name (Type or Print):_____ 10. Date: _____

KCSlip4 34023

SEA400570

WASTE CHARACTERIZATION FORM INSTRUCTIONS

Information on this form, is used to determine if the waste may be handled, transported, and disposed in a legal, safe, and environmentally sound manner. Answers must be provided for all sections of this form, and must be printed in ink or typed. A response of "NONE", or "NA" (not applicable) can be made, if appropriate. If additional space is needed, indicate on the form that additional information is attached, and attach the information to the Waste Characterization Form. If you have questions concerning this form, please contact the appropriate listed agency (See page 4).

Please check the appropriate space to indicate whether this is an initial application or renewal of a previous application. If it is a renewal, include the previous Health Department (HD) 7-digit Waste Characterization number.

PART A. WASTE GENERATOR INFORMATION

1. Generator Name / Fax #- Enter the name and fax # of the facility (or person if a residential site) where the waste is generated.
2. Generator Contact / Phone # - Enter the name and phone # of the person who can answer technical questions about the waste.
3. Generator USEPA ID - Enter the identification number issued by the USEPA to the facility generating the waste (if applicable).
4. SIC Code - Enter the 4-digit Standard Industrial Classification Code for the facility where the waste is generated (if known).
5. Generator Address - Enter the physical address (not P.O. Box) at the facility where the waste is generated.
6. Generator Mailing Address - Enter the street address, city, state and zip code to be used for written correspondence.

PART B. CONSULTANT INFORMATION

1. Consultant Company / Fax # - Enter the name and fax # of the company used to assist in sampling and/or characterizing the waste. If no consultant will be used, write none and skip to Part C.
2. Consultant Contact / Phone # - Enter the name and phone # of the person from the consultant company who can answer technical questions about the waste.
3. Consultant Address - Enter the consultant's street address, city, state and zip code.

PART C. TRANSPORTATION INFORMATION

1. Transporter Company / Fax # - Enter the name and fax # of the company that will transport the waste. If the waste is to be self handled enter <u>self</u> and skip to #4.
2. Transporter Contact / Phone # - Enter the name and phone # of your contact with the transporter company.
3. Transporter Address - Enter the transporter's street address, city, state and zip code.
4. Waste Packaging - Indicate the way the waste will be packaged during the shipment by checking the appropriate box.
5. Indicate whether this waste is a USDOT (See 49 CFR 171) Hazardous Material.

PART D. WASTE STREAM INFORMATION

1. Name of Waste - Enter the name generally descriptive of this waste (e.g., paint sludge, contaminated soil, incinerator ash, sharps, friable asbestos, fluorescent bulbs).
2. Process Generating Waste - List the specific process/operation or source that generates the waste (e.g., paint spray booth, spill clean up, incineration of municipal refuse, asbestos removal, building maintenance).
3. Annual Amount - Enter the amount of waste that will be generated and transported annually (expressed in pounds, or tons). Estimated Amount per delivery - If this waste is going directly to a transfer station or landfill enter an estimate of the amount to be delivered per trip.
4. Frequency of Disposal - Enter how often this waste will be removed from the site.
5. Special Handling Instructions/Supplemental Information - For all wastes, describe any special handling requirements and any additional information that you feel would assist in determining the proper method(s) for transportation, treatment, storage, and disposal of the waste.

In addition, for the following wastes include the information specified:

Animal carcasses: List the number and type of animals.

Asbestos - Containing material: Describe the method of containerization.

Please Note: If a Notice of Intent to Remove or Encapsulate is required by Puget Sound Air Pollution Control Agency, this Waste Clearance Application is not necessary.

Biomedical Waste (as defined by PUT 7-1-2 (PR): Describe the type of biomedical waste and the treatment method used.

Empty drums or other containers: List the number and size of containers.

Food Products/Containerized Liquids: Describe the food products or containerized liquids such as beer and wine. List the number and size of containers for any containerized liquids.

Fuel Oil Tanks (empty): List size of tank and contents before emptying.

For all of the wastes listed above, skip Parts E, F and G. However, Part H must be completed.

PART E. PHYSICAL CHARACTERISTICS OF WASTE

1. Color - Describe the color of the waste (e.g., blue, transparent, varies).
2. Odor - DO NOT SMELL THE WASTE. If the waste has a known incidental odor check "Yes" and describe it (e.g., acrid, pungent, solvent, sweet).
3. Physical State - Check the appropriate box for the physical state of the waste. Include a description if "other" is chosen (e.g., gas).
4. Free Liquids - Check "Yes" if liquid is usually present when packaging for shipment and estimate the present of liquid volume. Check "No" if there are no free liquids as determined by the Paint Filter Test (Method 9095 of SW-846) or direct observation.
5. pH - Check the appropriate box for the pH of the liquid portion of the waste. For solid or organic liquid wastes, indicate the pH of 10% aqueous solution of the waste, if applicable. Check "NA" for non-water soluble materials (e.g., foundry sand).
6. Flash Point - Check the appropriate box for the flash point of the waste and the method used to obtain the flash point, if applicable.

PART F. CHEMICAL COMPOSITION

1. List all organic and/or inorganic components of the waste using **specific chemical names**. If trade names are used, attach Material Safety Data Sheets or other documents which adequately describe the composition of the waste. For each component, estimate the range (in percents) in which the component is present. The total of the maximum values of the components must be greater than or equal to 100% including water, earth, etc..
2. If this waste contains PCBs, cyanides, or sulfides, indicate the concentration(s). If this waste does not contain these constituents, indicate by checking the "NO" box(es) which apply. If the concentration of these constituents is unknown, please indicate "UNK" under "ACTUAL".
3. Indicate the method(s) used to determine composition and attach the data.

PART G. SAMPLING INFORMATION

1. Indicate where the sample of the waste was obtained.
2. Check the appropriate box indicating the method of sampling.
3. Indicate the number of samples taken.

If the sample was handled using Chain of Custody, attach the completed form.

PART H. GENERATOR CERTIFICATION

By signing this Waste Characterization Form, the Generator certifies that the statements in numbers 1, 2, 3, 4, 5 and 6 are true and accurate with respect to the waste streams listed.

7. Signature - An authorized employee of the Generator must sign this Waste Characterization Form.
8. Title - Enter employee's title.
9. Name - Enter employee's name.
10. Date - Enter the date signed.

Send the completed application and direct questions regarding this form to the appropriate agency below.

For wastes generated within the Seattle city limits as well as contaminated soil and industrial wastes generated in King County, outside of Seattle:

Seattle-King County Department of Public Health
Waste Characterization Program
First Interstate Center
999 3rd Ave Ste 700
Seattle, WA. 98104-4099
Telephone: (206) 296-4633

For other wastes generated in King County (excluding the Seattle city limits), such as the wastes listed in Part D, number 5:

King County Solid Waste Division
Engineering Services, Waste Clearance Program
Yesler Building
400 Yesler Way, Room 600
Seattle, WA. 98104
Telephone: (206) 296-4418

KCSlip4 34025

SEA400572

CITY OF SEATTLE

CONTRACTOR PERFORMANCE EVALUATION PROGRAM

1.01 POLICY

A. The City of Seattle, acting through its Department of Finance, is charged with the responsibility of ensuring that all public works improvement projects are awarded to the lowest responsive, responsible bidder, and are performed in compliance with the contract documents, City ordinances, and state and federal laws and regulations. The Department of Finance is responsible to the citizens of the City to oversee the expenditure of public funds, and to secure the best possible results for that expenditure. To assist the Department of Finance in evaluating a Contractor's or subcontractor's responsibility, as well as its performance on City contracts, the Contractor Performance Evaluation Program has been developed. The implementation of a mandatory, standardized system of evaluating Contractors' and subcontractors' performance is expected to yield consistency, objectivity, fairness, and accountability.

1.02 PURPOSE

A. The Contractor Performance Evaluation Program is intended to:

1. Assist the Owner in exercising its discretion to determine a Contractor's qualifications and abilities to successfully perform a particular contract;
2. Provide the Owner with a rational basis for determining whether or not:
   a. A Contractor can be relied upon to work responsibly and
   b. To approve the Contractor's proposed principal Subcontractors;
3. Provide Contractors with a means of enhancing their reputation for qualification by receiving recognition for high standards of performance;
4. Encourage better working relationships between the Owner and Contractors;
5. Guide administering departments in approving, *or not approving,* proposed principal Subcontractors on a particular project.
6. Provide official, verifiable references for Contractors and Subcontractors who may be under consideration for award of, or approval on, contracts to be awarded by other public agencies.
7. Provide a history and an assessment of a Contractor's or Subcontractor's performance on prior City contracts for use in suspension or debarment proceedings.

B. An unacceptable report will be taken into consideration when determining Contractor qualifications for future work.

C. The Contractor Performance Evaluation Program is <u>not</u> intended to determine whether a Contractor has breached a contract with the City, or to determine the acceptability of any particular noncompliance with contract requirements.

D. The Owner is concerned with five major areas relative to the Contractor or Subcontractor's performance on a given Project:

1. The Contractor's or Subcontractor's ability to effectively and efficiently schedule, administer, coordinate, finance, and manage its work and the work of its Subcontractors on the Project;
2. The degree and extent of the Contractor's or Subcontractor's cooperation with the Owner, Engineer, their employees and Consultants, and the public;
3. The Contractor's or Subcontractor's initiative in all aspects of its work; and
4. The quality of material and workmanship and safe and timely completion of the final product.
5. *The Contractor enforces health and safety in conducting the Work.*

E. To evaluate the Contractor's or subcontractor's success in meeting the above concerns, specific performance criteria have been developed that take into account the effect the Contractor's or subcontractor's performance has had on:

1. Compliance with contract requirements and applicable laws and regulations;
2. Project schedule and budget;
3. Public safety and convenience; and
4. Increases or decreases in contract administration or consultant workload.

1.03 PERFORMANCE CATEGORY EVALUATION GUIDE

A. The Performance Category Evaluation Guide establishes criteria to be used in evaluating the Contractor's or subcontractor's performance in connection with each Performance Category, and describes six Performance Levels, five of which range in ascending order of merit from "Inadequate" to "Superior". The "Standard" Performance Level is considered a baseline; it characterizes the level of acceptable performance normally associated with a reasonably prudent, diligent, and skilled Contractor or subcontractor working on projects of the same general type and size. Both the "Superior" and "Good" Levels characterize performance levels that exceed the baseline; they respectively connote consistent and substantial positive contributions to the overall project. Both the "Deficient" and "Inadequate" Levels characterize levels of performance that fall below the baseline, and respectively connote substantial and serious detriment to the overall project. The "No Evaluation" Level is to be used only where the Contractor or subcontractor had no direct or indirect responsibility for performance.

B. The six Performance Levels are more specifically described as follows, and the criteria set forth for each shall be applied in evaluating the Contractor's or subcontractor's performance in connection with each of the Performance Categories listed in Section III of the Contractor Performance Evaluation Report:

1. Superior
   a. To merit an evaluation of "Superior" in any Performance Category, the Contractor or subcontractor must have consistently demonstrated:
      1) Command or virtual mastery of the contract documents related to that Performance Category;

2) Performance of the work or activity being evaluated under that Performance Category that always exceeded or surpassed the material requirements of the contract;

3) A highly cooperative attitude in dealing with the Owner's employees, the Owner's consultants, and the public in connection with that Performance Category, which attitude made a substantial, positive contribution to the project; and

4) Initiative in carrying out his or her duties in connection with that Performance Category in a responsive, thorough, and timely manner without prompting by contract administrators or consultants.

b. If the Contractor or subcontractor fails to satisfy any one of the Performance Level criteria set out above, then his or her performance will be re-evaluated under the "Good" Level by applying the criteria for that Level.

2. Good

a. To merit an evaluation of "Good" in any Performance Category, the Contractor or subcontractor must have demonstrated:

1) Thorough knowledge of contract documents related to that Performance Category;

2) Performance of the work or activity being evaluated under that Performance Category that always met, and often exceeded, the material requirements of the contract;

3) A cooperative attitude in dealing with the Owner's employees, the Owner's consultants, and the public in connection with that Performance Category, which attitude made a positive contribution to the project; and

4) Initiative in carrying out his or her duties in connection with that Performance Category in a responsive, thorough, and timely manner with only minimal prompting by contract administrators or consultants.

b. If the Contractor or subcontractor fails to satisfy any one of the Performance Level criteria set out above, then his or her performance will be re-evaluated under the "Standard" Level by applying the criteria for that Level.

3. Standard

a. To merit an evaluation of "Standard" in any Performance Category, the Contractor or subcontractor must have demonstrated:

1) Acceptable knowledge of the contract documents related to that Performance Category;

2) Performance of the work or activity being evaluated under that Performance Category that met all material contract requirements;

3) A generally cooperative attitude toward the Owner's employees, the Owner's consultants, and the public in connection with that Performance Category; and

4) Initiative in carrying out his or her duties in connection with that Performance Category in a responsive, thorough, and timely manner with only moderate prompting by contract administrators or consultants.

b. If the Contractor or subcontractor fails to satisfy any one of the Performance Level criteria set out above, then his or her performance will be re-evaluated under the "Deficient" and "Inadequate" Levels by applying the criteria for those Levels.

4. Deficient

a. To merit an evaluation of "Deficient" in any Performance Category, the Contractor or subcontractor must have demonstrated:

1) Marginal knowledge of the contract documents related to that Performance Category;

2) Performance of the work or activity being evaluated under that Performance Category that did not always meet contract requirements, and such failures were not excusable as the sole fault and responsibility of one or more other parties;

3) An occasionally uncooperative attitude toward the Owner's employees, the Owner's consultants, or the public in connection with that Performance Category; or

4) Performance of his or her duties in connection with that Performance Category in a moderately unresponsive, inattentive, or dilatory manner, or after frequent or repeated prompting by City contract administrators or consultants.

5. Inadequate

a. To merit an evaluation of "Inadequate" in any Performance Category, the Contractor or subcontractor must have either:

1) Failed to satisfy the criteria listed for the Performance Levels of "Superior", "Good", "Standard", and "Deficient" set out above and did not qualify for treatment under Section III.F below; or

2) Must have demonstrated:

a) Inadequate knowledge of the contract documents related to that Performance Category;

b) Performance of the work or activity being evaluated under that Performance Category which seldom met the contract requirements, and such failures were not excusable as the sole fault and responsibility of one or more other parties;

c) A seriously uncooperative attitude toward the Owner's employees, the Owner's consultants, or the public in connection with that Performance Category; or

d) Performance of his or her duties in connection with that Performance Category in a seriously unresponsive, inattentive, or dilatory manner, or only after frequent prompting by contract administrators or consultants.

6. No Evaluation

a. This Performance Level shall be used only in those circumstances where the Contractor or subcontractor had no contractual responsibility, either directly or through its subcontractors, suppliers, or materialmen, for performance related to that Performance Category. Consequently, this Performance Level is generally applicable only to certain Performance Categories in the evaluation of subcontractors.

1.04 OVERALL EVALUATION GUIDE

A. The Contractor's or subcontractor's Overall Evaluation can be determined by placing the Overall Percentage Score calculated on the Contractor Performance Evaluation Report within the numerical ranges of the following narrative ratings in the Overall Evaluation Guide:

1. Superior (Overall Percentage Score of 85% or above)

a. The Contractor or subcontractor exceeded the contract requirements and expectations in most or all of the areas evaluated. The Contractor or subcontractor was extremely or completely knowledgeable regarding contract requirements and applicable laws and regulations. A consistently high level of cooperation, project management, and job site control appreciably contributed to an unusually good result. The Contractor or subcontractor is commended for excellent performance.

2. Good (Overall Percentage Score of 75% to 84%)

a. The Contractor or subcontractor met contract requirements evaluated, and exceeded them in some areas. The Contractor or subcontractor was generally cooperative, and performed his/her work with a minimum of prompting. The results of the performance were very good.

3. Standard (Overall Percentage Score of 70% to 74%)

a. The Contractor or subcontractor generally satisfied the minimum requirements of the contract as evaluated. The Contractor or subcontractor occasionally had to be prompted or reminded of contract requirements, but overall management of the project was good, producing a good result.

4. Deficient (Overall Percentage Score of 55% to 69%)

a. Even though the project may have been accepted, the Contractor's or subcontractor's performance as evaluated was marginal overall. While the Contractor or subcontractor performed some tasks satisfactorily, most elements evaluated reflected a less than satisfactory response to contract requirements.

5. Inadequate (Overall Percentage Score of 54% or below)

a. The Contractor's or subcontractor's performance as evaluated did not meet minimum contract requirements, or so otherwise detracted from the project as to seriously call it into jeopardy. While the project may have been accepted by theOwner, the effort expended by the Owner's contract administrators or consultants in prompting the Contractor or subcontractor to perform was excessive. The Contractor's or subcontractor's poor or uncooperative performance created serious unnecessary or avoidable difficulties in achieving contract completion.

B. A Contractor's Overall Evaluation, being based upon an averaged score on a discrete number of Performance Categories, should not be read or interpreted as a measure of whether the Contractor did or did not breach the contract in question. For example, a Contractor who receives an overall Evaluation of "Superior" may have nevertheless breached the contract (1) in an area not evaluated, e.g., Minority and Women's Business Enterprise utilization; or (2) within an area or Performance Category actually evaluated but under which, on balance, the Contractor's performance was rated "Superior", "Good", or "Standard".

1.05 PERFORMANCE EVALUATION REPORTS

A. The Contractor's performance and compliance with the terms of the Contract Documents will be rated by the senior supervisor within the administrative department (i.e., the Senior Engineer, Architect, or Project Manager as appropriate). *The rating will be done* utilizing this Contractor Performance Evaluation Program document. A blank sample of the Contractor/Subcontractor Performance Evaluation Report that will be used is included at the end of this document.

B. Each Performance Category has been assigned its own point range; the point ranges for the various Performance Categories have been weighted to reflect the relative importance of the Performance Categories and their overall impact on City projects generally. A larger number of possible points has been assigned to those elements that typically have a greater impact on the success or failure of a project. The point ranges reflect the dramatic effect either poor performance or very good performance can have on the project, e.g., in terms of workload, budget, schedule, and safety.

C. Every Contractor Performance Evaluation Report containing Performance Level evaluations of "Deficient" or "Inadequate", and all Overall Evaluations on projects the total cost of which is $500,000 or more, shall contain one or more narratives which provide details substantiating the evaluations. Narratives may be provided for other Performance Categories as the evaluator deems necessary.

D. Narratives provided with a Contractor Performance Evaluation Report shall be based upon documentation prepared during the life of the project, e.g., project diaries, inspectors' reports, and other pertinent documents. Such documentation shall constitute a major portion of the administrative record to be used for any review, appeal, or litigation that may arise from the evaluation process.

E. Every Contractor Performance Evaluation Report shall be signed by the senior supervisor within the administering department responsible for the administration of the work before a copy of the Report shall be transmitted to the Contractor or subcontractor. The Report shall not be considered final until such time as the review/appeal periods described in Section VI of these instructions have been completed.

F. Generally, only one Contractor Performance Evaluation Report shall be issued, following completion of the contract work. However, in addition to a final Report, one or more interim Reports may be issued at the administering department's discretion when:

1. A contract is of long duration, particularly those in excess of one year.
2. An individual charged with primary responsibility for administration of the contract will cease his or her involvement with the project prior to completion of the work.
3. Contractor's/subcontractor's performance at 50% completion is deficient or inadequate.

G. Interim Contractor Performance Evaluation Reports shall be considered to be preliminary and shall be designated as such, and shall be processed administratively in the same manner as a Final Report. A Contractor or subcontractor may request review of an Interim Report by the administering department head; and appeal to the Director of Finance or his/her designee pursuant to the provisions of Section VI below. All Interim Reports shall be attached to, and considered when preparing, the Final Report.

1.06 NOTICE, REVIEW, AND APPEAL

A. Notice

1. Contractor's and subcontractors shall be mailed a copy of their Contractor Performance Evaluation Report within a reasonable time after completion of the Report. A Contractor or subcontractor who is given an Overall Evaluation of "Deficient" or "Inadequate" in connection with a project shall be provided with a copy of the Contractor Performance Evaluation Report via certified mail (return receipt requested).

B. Review

1. A Contractor or subcontractor who disputes, or is otherwise dissatisfied with, his or her Contractor Performance Evaluation Report may request review of the Report by the Head of the administering department. The request must be submitted in writing within thirty (30) calendar days of receipt by the Contractor or subcontractor of the Final Contractor Performance Evaluation Report. The request must also state, with specificity, all bases for the requested review.
2. The department Head shall, upon receipt of a proper and timely request, review the Contractor Performance Evaluation Report and any documentation submitted by the Contractor or subcontractor with his or her request. The department Head shall, on the basis of his or her review, issue findings which may affirm, correct, or modify all or any part of the Report. A copy of the findings shall be mailed to the Contractor or subcontractor via registered mail, return receipt requested.

C. Appeal

1. Within ten (10) calendar days of receipt by the Contractor or subcontractor of the department Head's findings on review, the Contractor or subcontractor may appeal therefrom to the Director of Finance or his/her designee. Any such appeal shall be in writing, and shall state with specificity the bases or grounds for the appeal.
2. The Director of Finance or his/her designee shall review and consider the objectivity, accuracy, completeness, and fairness of the Contractor Performance

Evaluation Report, together with the department Head's findings, engineers' diaries, job records and other documentation, including such documentation as the Contractor may provide with the appeal.

3. Upon hearing and review of the department Head's findings, the Director of Finance or his/her designee shall issue a determination and findings which may affirm or modify the Contractor's or subcontractor's Contractor Performance Evaluation Report. The Director of Finance or his/her designee shall notify the Contractor or subcontractor of its determination and findings by certified mail (return receipt requested).

1.07 DISQUALIFICATION FOR WORK ON SPECIFIC PROJECT

A. The Director of Finance may determine, from Contractor Performance Evaluation Reports and other public documents relating to the project in question, that a Contractor or subcontractor who has received one or more Overall Evaluations of "Deficient" or "Inadequate" is not qualified or able to successfully perform a specific City project and is therefore ineligible for award of that contract.

B. When, on that basis, the Director of Finance believes that the low bidder is not qualified or able to successfully perform a project, the Department of Finance shall notify the low bidder of its intent to award the contract to the next lowest responsive, responsible bidder. At that time, the Department of Finance shall also inform the Contractor of the date and time the matter of contract award has been scheduled for consideration by the Department of Finance. Only the Contractor or subcontractor, departmental staff, and counsel will be given an opportunity to address the Department of Finance on the issue of disqualification prior to the Department of Finance reaching its decision on the award.

1.08 DEBARMENT OF CONTRACTING FIRM

A. Upon request of any department head, the Director of Finance or his/her designee, after hearing and evaluating the evidence, may debar a Contractor or subcontractor from contracting with the City for a period of up to two years for any of the following reasons:

1. A Contractor or subcontractor has received overall evaluations of their performance of "Deficient" or "Inadequate" on three or more City projects physically completed during the preceding five (5) year period.

2. A Contractor or subcontractor has failed to comply with the equal employment opportunity/affirmative action requirements of Seattle Municipal Code 20.44 or contract provisions or the sworn affidavit implementing it.

3. A Contractor or subcontractor has abandoned, surrendered, or failed to complete, or failed to perform work on, or in connection with, any City of Seattle contract.

4. A Contractor or subcontractor has failed to perform work on a City contract in accordance with the contract provisions, including among other specifications, those on the quality of workmanship and the timeliness of performance, safety standards, and prevailing wage requirements.

5. A Contractor or subcontractor has failed to comply to a substantial extent with applicable federal or State law or City ordinance, or with the rules and regulations implementing them.

6. A Contractor or subcontractor has submitted false or misleading reports or statements to the City in connection with a City contract.
7. A Contractor or subcontractor has colluded with another to restrain competition.
8. A combination of any or part of any of the above reasons.
9. A determination by the Director of Finance or his/her designee that the performance of a Contractor or subcontractor is such that it would not be in the best interests of the City to permit the Contractor or subcontractor to work on additional City projects.

1.09 RELEASE OF INFORMATION

A. Contractor Performance Evaluation Reports are public documents subject to disclosure to other governments and to the public. Because the Reports and the Overall Evaluations they contain may be used as a basis for contract award and may reflect upon the Contractor's or subcontractor's reputation, care must be taken to assure that only accurate, complete, and current information is released.

1. Final Reports
   a. Contractor Performance Evaluation Reports may be released when:
      1) The Report becomes final as set forth in Section V of these instructions; or
      2) The City has relied upon the Report for the purpose of taking further action with respect to the Contractor or subcontractor; or
      3) A court has ordered release of the Report.
2. Interim Reports
   a. Interim Contractor Performance Evaluation Reports may only be released when:
      1) The Contractor or subcontractor has consented in writing to the release; or
      2) The Contractor or subcontractor has requested and received final administrative review of an Interim Report; or
      3) The City has used or relied upon the Interim Report to take action with respect to the Contractor or subcontractor; or
      4) A court has ordered release of the Report.
3. Termination for Default and Pending Litigation
   a. In the event that a City contract is terminated for reason of the prime Contractor's default, that fact shall be noted only on the prime Contractor's Contractor Performance Evaluation Report. In the event that a Contractor commences suit against the City, that Contractor's Performance Evaluation Report shall not be released without approval of the City Attorney's office.
4. Intergovernmental Cooperation

a. All requests for Contractor or subcontractor references from agencies of foreign, federal, state, or local governments shall be referred to the Director of Finance or his/her designee. If such a request is honored, the requesting agency shall be provided with copies of all Performance Evaluation Reports on the Contractor or subcontractor, together with any written objections or refutations filed with the Department of Finance by the Contractor or subcontractor in connection therewith.

1.10 INSTRUCTIONS FOR COMPLETING EVALUATION FORMS

A. The administering department shall first complete Sections I and II, "Contractor Data" and "Project Data".

B. The evaluator for the administering department shall then evaluate the Contractor's or subcontractor's performance in each of the Performance Categories listed in Section III of the Contractor Performance Evaluation Report, and shall assign points for each. In all cases, the first step is to apply the Element Rating Guide to determine the Performance Level of the Contractor's or subcontractor's performance in each Performance Category.

C. The descriptions provided on the Contractor Performance Evaluation form for each Performance Category will not necessarily match precisely with the Contractor's or subcontractor's actual performance of the task(s) on a given portion of the project.

D. Each evaluator should consider the general character of the Contractor's or subcontractor's performance for each Performance Category evaluated and select the Performance Level that most closely matches the actual performance.

E. Once a Performance Level has been determined for a Performance Category, the corresponding point subrange will be found on the Contractor Performance Evaluation Report form. For example, suppose the evaluator applied the criteria in the Performance Evaluation Guide to a Contractor's performance in relation to Performance Category Number 5 (Adherence to plans and specifications as related to quality of the work---94 points possible) and determined that the Contractor's level of performance in that Category was "Good". The corresponding point subrange would be 70-79 points.

F. The evaluator may then, in his or her discretion, assign any number of points within the subrange. To continue the example, suppose the evaluator decided that the Contractor's performance in that Performance Category fell just short of "Superior". He or she could assign the Contractor up to 79 points in that Category. Evaluators should use only whole numbers within the subrange indicated for each Performance Category. If the Contractor or subcontractor was not responsible for any performance in connection with a given Performance Category, then the Contractor's or subcontractor's evaluation in that Category should be "No Evaluation", and no points should be assigned.

G. When rating a prime Contractor, the evaluator should consider all the work performed by the prime as well as work performed by all subcontractors, since the prime Contractor is contractually responsible to the City for all of the work under the prime contract, whether or not the prime actually performs the work. A separate Contractor Performance Evaluation Report should be completed for the performance of each major subcontractor to evaluate that portion of the job for which the subcontractor or its subcontractors is responsible. (Rating all subcontractors shall be at the option of the

administering department; i.e. it may be deemed unnecessary to evaluate a subcontractor whose involvement in the contract work was minimal.)

H. Comments are always encouraged, and may be written on the reverse side of the Contractor Performance Evaluation Report or on an attachment to the Report.

I. However, for each Performance Category evaluated as "Deficient" or "Inadequate", the evaluator must prepare a written narrative substantiating the facts and circumstances giving rise to the evaluation.

J. After evaluating the Contractor or subcontractor on Performance Categories listed in Section III of the Contractor Performance Evaluation Report (and assigning points for each Category), the evaluator within the administering department shall total all the assigned points for Section III. The Grand Total Assigned Points will then be divided by the Total Points Possible (i.e., excluding the maximum number of points available for those Performance Categories evaluated as "No Evaluation"). The evaluator will calculate the Overall Percentage Score and will enter the appropriate Overall Evaluation on the basis of the following ranges:

1.	Superior	85% and above
2.	Good	75% to 84%
3.	Standard	70% to 74%
4.	Deficient	55% to 69%
5.	Inadequate	54% and below

K. The evaluator shall sign the Report and forward it to the department head or his/her designee for concurrence signature and submission to the Department of Finance. The Department of Finance staff shall then forward signed copies of the completed Report to the Contractor or subcontractor.

L. If a Contractor Performance Evaluation Report is an Interim Report, the Report should indicate on its face that it is interim, and shall contain the following language:

M. This Performance Evaluation Report is not the final report on this Contractor on this project. The Contractor may dispute the Report or any part thereof, and need not seek review or appeal until completion and acceptance of the project.

N. Interim Reports, if issued, shall be attached to the Final Report.

O. Pending issuance of a Final Report, an Interim Report shall not be released to anyone other than City staff employees and the subject Contractor or subcontractor unless:

1. The Contractor or subcontractor has consented in writing;
2. The Contractor or subcontractor has requested and received final administrative review of an Interim Report;
3. The City has used or relied upon the Interim Report to take action with respect to the Contractor or subcontractor;
4. A court has ordered release of the Report.

This page left blank intentionally.

CONTRACTOR/SUBCONTRACTOR PERFORMANCE EVALUATION REPORT

SECTION 1 CONTRACT DATA		SECTION II PROJECT DATA
CONTRACTOR:		PROJECT TITLE:
PRIME ( ) SUBCONTRACTOR ( )	PW NUMBER:	ADMINISTERING DEPARTMENT:
SUPERINTENDENT:	SCHEDULE COMPL DATE:	ACTUAL COMPL DATE:
SPECIFIC WORK PERFORMED BY CONTRACTOR/SUBCONTRACTOR	CONTRACT AWARD AMOUNT $	CONTRACT COMPLETION AMOUNT $
PROJECT DESCRIPTION:		

PERFORMANCE CATEGORY AND OVERALL EVALUATION

PERFORMANCE CATEGORIES A. TO BE COMPLETED BY ADMINISTERING DEPT	NO EVAL	INADE-QUATE	DEFICIENT	STANDARD	GOOD	SUPERIOR	ASSIGNED
1. FFECTIVENESS OF ON-SITE SUPERVISON, JOB SITE MAINTENANCE, DELIVERY AND STORAGE OF MATERIAL & SUPPLIES.		0 to 20	21 to 26	27	28 to 38	32 to 38	
2. NTICIPATION OF PROBLEMS AND MAKING NECESSARY ADJUSTMENTS TO ADAPT TO ALTERED REQUIREMENTS.		0 to 10	11 to 13	14	15 or 16	17 to 20	
3. COORDINATION AND COOPERATION WITH DEPARTMENT PERSONNEL ON PROJECT MATTERS.		0 to 10	11 to 13	14	15 or 16	17 to 20	
4. AVAILABILITY OF RESPONSIBLE REPRESENTATIVES FOR INSTRUCTION & DECISION MAKING.		0 to 10	11 to 13	14	15 or 16	17 to 20	
5. ADHERENCE TO PLANS & SPECIFICATION AS RELATED TO THE QUALITY OF PROJECT WORK.		0 to 50	51 to 65	66 to 69	70 to 79	80 to 94	
6. STANDARDS OF MATERIALS		0 to 31	32 to 41	42 to 44	45 to 50	51 to 60	
7. STANDARDS OF WORKMANSHIP		0 to 56	57 to 73	74 to 78	79 to 89	90 to 106	
8. OPTIMUM UTILIZATION OF CONTRACTOR PERSONNEL.		0 to 10	11 to 13	14	15 or 16	17 to 20	
9. OPTIMUM UTILIZATION OF CONTRACTOR EQUIPMENT.		0 to 17	18 to 23	24 or 25	26 to 28	29 to 34	
10. CONDITION OF CONTRACTOR'S TOOLS/EQUIPMENT.		0 to 27	28 to 35	36 to 38	39 to 43	44 to 52	
11. EFFECTIVENESS OF CONTRACTOR'S COORDINATION OF SUBCONTRACTORS AND SUPPLIES.		0 to 10	11 to 13	14	15 to 16	17 to 20	
12. RELATIONS WITH THE GENERAL PUBLIC, OTHER AGENCIES & ADJACENT CONTRACTORS.		0 to 21	22 to 28	29 to 31	32 to 35	36 to 42	
13. ADEQUACY & TIMELINESS OF PROGRESS SCHEDULES.		0 to 15	16 to 20	21 or 22	23 to 25	26 to 30	
14. ACCURATE & TIMELY CONTRACT CHANGE ORDER RESPONSES, PAYMENT SUPPORT DOCUMENTS, REPORTS & OTHER SPECIFIED DOCUMENTS.		0 to 3	4	5	6	7 or 8	
15. EFFECTIVE SCHEDULING & COMPLETION OF PROJECT WORK AS SCHEDULED.		0 to 24	44 to 58	59 to 62	63 to 70	63 to 70	
16. MAINTENANCE OF EMPLOYEE SAFETY STANDARDS.		0 to 36	37 to 47	48 to 50	51 to 57	58 to 68	
17. ATTENTION TO PUBLIC SAFETY & TRAFFIC CONTROL		0 to 38	39 to 50	51 to 53	54 to 60	61 to 72	
18. COMPLIANCE WITH ENVIRONMENTAL LAWS, ORDINANCES & REGULATIONS		0 to 21	22 to 28	29 to 31	32 to 35	36 to 42	
19. DILIGENCE IN COMPLETING FINAL (PUNCH LIST) WORK		0 to 26	27 to 34	35 or 36	37 to 41	42 to 50	

Evaluated By (Name) Title Date

Concurrence By (Name) Title Date

TOTAL ASSIGNED POINTS _____

TOTAL POINTS POSSIBLE (Excluding "NO EVAL" Elements) _____

OVERALL % SCORE _____ OVERALL EVALUATION _____

KCSlip4 34038

SEA400585

WAGE RATES

State of Washington
DEPARTMENT OF LABOR AND INDUSTRIES
Prevailing Wage Section - Telephone (360) 902-5335
PO Box 44540, Olympia, WA 98504-4540

Washington State Prevailing Wage Rates For Public Works Contracts

The PREVAILING WAGES listed here include both the hourly wage rate and the hourly rate of fringe benefits. On public works projects, workers' wage and benefit rates must add to not less than this total. A brief description of overtime calculation requirements is provided on the Benefit Code Key.

KING COUNTY

Effective 08-31-01

****

*

Classification	PREVAILING WAGE	(See Benefit Code Key) Over Time Code	Holiday Code	Note Code
ASBESTOS ABATEMENT WORKERS				
JOURNEY LEVEL	$29.67	1M	5D	
BOILERMAKERS				
JOURNEY LEVEL	$35.96	1B	5N	
BRICK AND MARBLE MASONS				
JOURNEY LEVEL	$35.37	1M	5A	
CABINET MAKERS (IN SHOP)				
JOURNEY LEVEL	$11.71	1		
CARPENTERS				
ACOUSTICAL WORKER	$34.50	1M	5D	
BRIDGE, DOCK AND WARF CARPENTERS	$34.34	1M	5D	
CARPENTER	$34.34	1M	5D	
CREOSOTED MATERIAL	$34.44	1M	5D	
DRYWALL APPLICATOR	$34.94	1M	5D	
FLOOR FINISHER	$34.47	1M	5D	
FLOOR LAYER	$34.47	1M	5D	
FLOOR SANDER	$34.47	1M	5D	
MILLWRIGHT AND MACHINE ERECTORS	$35.34	1M	5D	
PILEDRIVERS, DRIVING, PULLING, PLACING COLLARS AND WELDING	$34.54	1M	5D	
SAWFILER	$34.47	1M	5D	
SHINGLER	$34.47	1M	5D	
STATIONARY POWER SAW OPERATOR	$34.47	1M	5D	
STATIONARY WOODWORKING TOOLS	$34.47	1M	5D	
CEMENT MASONS				
JOURNEY LEVEL	$35.33	1M	5D	
DIVERS & TENDERS				
DIVER	$74.30	1M	5D	8A
DIVER TENDER	$37.01	1M	5D	
DREDGE WORKERS				
ASSISTANT ENGINEER	$35.67	1B	5D	8L
ASSISTANT MATE (DECKHAND)	$35.23	1B	5D	8L
BOATMEN	$35.67	1B	5D	8L
ENGINEER WELDER	$35.72	1B	5D	8L
LEVERMAN, HYDRAULIC	$37.11	1B	5D	8L
MAINTENANCE	$35.23	1B	5D	8L
MATES	$35.67	1B	5D	8L
OILER	$35.33	1B	5D	8L
DRYWALL TAPERS				
JOURNEY LEVEL	$34.92	1J	5B	
ELECTRICIANS - INSIDE				
CABLE SPLICER	$44.57	1D	6H	
CABLE SPLICER (TUNNEL)	$61.22	1D	6H	
CERTIFIED WELDER	$42.95	1D	6H	
CERTIFIED WELDER (TUNNEL)	$58.85	1D	6H	
CONSTRUCTION STOCK PERSON	$22.79	1D	6H	
JOURNEY LEVEL	$41.33	1D	6H	
JOURNEY LEVEL (TUNNEL)	$56.47	1D	6H	
ELECTRICIANS - POWERLINE CONSTRUCTION				
CABLE SPLICER	$42.16	4A	5A	
CERTIFIED LINE WELDER	$38.72	4A	5A	
GROUNDPERSON	$28.38	4A	5A	

KING COUNTY

Effective 08-31-01

****

*

Classification	PREVAILING WAGE	Over Time Code	Holiday Code	Note Code
		(See Benefit Code Key)		
HEAD GROUNDPERSON	$29.81	4A	5A	
HEAVY LINE EQUIPMENT OPERATOR	$38.72	4A	5A	
JACKHAMMER OPERATOR	$29.81	4A	5A	
JOURNEY LEVEL LINEPERSON	$38.72	4A	5A	
LINE EQUIPMENT OPERATOR	$32.95	4A	5A	
POLE SPRAYER	$38.72	4A	5A	
POWDERPERSON	$29.81	4A	5A	
ELECTRONIC & TELECOMMUNICATION TECHNICIANS				
JOURNEY LEVEL	$12.07	1		
ELEVATOR CONSTRUCTORS				
CONSTRUCTOR	$31.29	4A	6I	
MECHANIC	$42.25	4A	6I	
MECHANIC IN CHARGE	$46.63	4A	6I	
PROBATIONARY CONSTRUCTOR	$16.27	4A	6I	
FENCE ERECTORS				
FENCE ERECTOR	$13.80	1		
FENCE LABORER	$11.60	1		
FLAGGERS				
JOURNEY LEVEL	$24.99	1M	5D	
GLAZIERS				
JOURNEY LEVEL	$35.21	2E	5G	
HEAT & FROST INSULATORS AND ASBESTOS WORKERS				
MECHANIC	$35.83	1F	5C	
INLAND BOATMEN				
ASSISTANT ENGINEER	$30.68	1K	5D	
CHIEF ENGINEER	$31.55	1K	5D	
COOK	$26.56	1K	5D	
DECK ENGINEER, ABLE SEAMAN, OILER	$26.56	1K	5D	
DECKHAND	$26.15	1K	5D	
FIRST MATE	$30.78	1K	5D	
MASTER	$33.72	1K	5D	
MATE, LAUNCH OPERATOR	$28.81	1K	5D	
MESSMAN	$21.94	1K	5D	
ORDINARY SEAMAN	$23.26	1K	5D	
INSULATION APPLICATORS				
JOURNEY LEVEL	$34.34	1M	5D	
IRONWORKERS				
JOURNEY LEVEL	$37.07	1B	5A	
LABORERS				
ASPHALT RAKER	$30.15	1M	5D	
BALLAST REGULATOR MACHINE	$29.67	1M	5D	
BATCH WEIGHMAN	$24.99	1M	5D	
CARPENTER TENDER	$29.67	1M	5D	
CASSION WORKER	$30.51	1M	5D	
CEMENT DUMPER/PAVING	$30.15	1M	5D	
CEMENT FINISHER TENDER	$29.67	1M	5D	
CHIPPING GUN (OVER 30 LBS)	$30.15	1M	5D	
CHIPPING GUN (UNDER 30 LBS)	$29.67	1M	5D	
CHUCK TENDER	$29.67	1M	5D	
CLEAN-UP LABORER	$29.67	1M	5D	
CONCRETE FORM STRIPPER	$29.67	1M	5D	
CONCRETE SAW OPERATOR	$30.15	1M	5D	
CRUSHER FEEDER	$24.99	1M	5D	
CURING LABORER	$29.67	1M	5D	
DEMOLITION, WRECKING & MOVING (INCLUDING CHARRED MATERIALS)	$29.67	1M	5D	
DITCH DIGGER	$29.67	1M	5D	
DIVER	$30.51	1M	5D	
DRILL OPERATOR (HYDRAULIC, DIAMOND)	$30.15	1M	5D	

KING COUNTY

Effective 08-31-01

****

*

Classification	PREVAILING WAGE	(See Benefit Code Key) Over Time Code	Holiday Code	Note Code
DRILL OPERATOR, AIRTRAC	$30.51	1M	5D	
DUMPMAN	$29.67	1M	5D	
FALLER/BUCKER, CHAIN SAW	$30.15	1M	5D	
FINAL DETAIL CLEANUP (i.e., dusting, vacuuming, window cleaning; NOT construction debris cleanup)	$22.67	1M	5D	
FINE GRADERS	$29.67	1M	5D	
FIRE WATCH	$29.67	1M	5D	
FORM SETTER	$29.67	1M	5D	
GABION BASKET BUILDER	$29.67	1M	5D	
GENERAL LABORER	$29.67	1M	5D	
GRADE CHECKER & TRANSIT PERSON	$30.15	1M	5D	
GRINDERS	$29.67	1M	5D	
GROUT MACHINE TENDER	$29.67	1M	5D	
HAZARDOUS WASTE WORKER LEVEL A	$30.51	1M	5D	
HAZARDOUS WASTE WORKER LEVEL B	$30.15	1M	5D	
HAZARDOUS WASTE WORKER LEVEL C	$29.67	1M	5D	
HIGH SCALER	$30.51	1M	5D	
HOD CARRIER/MORTARMAN	$30.15	1M	5D	
JACKHAMMER	$30.15	1M	5D	
LASER BEAM OPERATOR	$30.15	1M	5D	
MINER	$30.51	1M	5D	
NOZZLEMAN, CONCRETE PUMP, GREEN CUTTER WHEN USING HIGH PRESSURE AIR & WATER ON CONCRETE & ROCK, SANDBLAST, GUNITE, SHOTCRETE, WATER BLASTER	$30.15	1M	5D	
PAVEMENT BREAKER	$30.15	1M	5D	
PILOT CAR	$24.99	1M	5D	
PIPE RELINER (NOT INSERT TYPE)	$30.15	1M	5D	
PIPELAYER & CAULKER	$30.15	1M	5D	
PIPELAYER & CAULKER (LEAD)	$30.51	1M	5D	
PIPEWRAPPER	$30.15	1M	5D	
POT TENDER	$29.67	1M	5D	
POWDERMAN	$30.51	1M	5D	
POWDERMAN HELPER	$29.67	1M	5D	
POWERJACKS	$30.15	1M	5D	
RAILROAD SPIKE PULLER (POWER)	$30.15	1M	5D	
RE-TIMBERMAN	$30.51	1M	5D	
RIPRAP MAN	$29.67	1M	5D	
SIGNALMAN	$29.67	1M	5D	
SLOPER SPRAYMAN	$29.67	1M	5D	
SPREADER (CLARY POWER OR SIMILAR TYPES)	$30.15	1M	5D	
SPREADER (CONCRETE)	$30.15	1M	5D	
STAKE HOPPER	$29.67	1M	5D	
STOCKPILER	$29.67	1M	5D	
TAMPER & SIMILAR ELECTRIC, AIR & GAS	$30.15	1M	5D	
TAMPER (MULTIPLE & SELF PROPELLED)	$30.15	1M	5D	
TOOLROOM MAN (AT JOB SITE)	$29.67	1M	5D	
TOPPER-TAILER	$29.67	1M	5D	
TRACK LABORER	$29.67	1M	5D	
TRACK LINER (POWER)	$30.15	1M	5D	
TUGGER OPERATOR	$30.15	1M	5D	
VIBRATING SCREED (AIR, GAS, OR ELECTRIC)	$29.67	1M	5D	
VIBRATOR	$30.15	1M	5D	
WELDER	$29.67	1M	5D	
WELL-POINT LABORER	$30.15	1M	5D	
LANDSCAPE CONSTRUCTION				
IRRIGATION OR LAWN SPRINKLER INSTALLERS	$11.07	1		
LANDSCAPE EQUIPMENT OPERATORS OR TRUCK DRIVERS	$10.63	1		

KING COUNTY

Effective 08-31-01

****

*

Classification	PREVAILING WAGE	(See Benefit Code Key) Over Time Code	Holiday Code	Note Code
LANDSCAPING OR PLANTING LABORERS	$8.42	1		
LATHERS				
JOURNEY LEVEL	$34.94	1M	5D	
PAINTERS				
JOURNEY LEVEL	$27.63	2B	5A	
PLASTERERS				
JOURNEY LEVEL	$35.63	1R	5A	
PLUMBERS & PIPEFITTERS				
JOURNEY LEVEL	$43.71	1G	5A	
POWER EQUIPMENT OPERATORS				
ASSISTANT ENGINEERS	$33.59	1T	5D	8L
BACKHOE, EXCAVATOR, SHOVEL (3 YD & UNDER)	$36.05	1T	5D	8L
BACKHOE, EXCAVATOR, SHOVEL (OVER 3 YD & UNDER 6 YD)	$36.49	1T	5D	8L
BACKHOE, EXCAVATOR, SHOVEL (6 YD AND OVER WITH ATTACHMENTS)	$36.99	1T	5D	8L
BACKHOES, (75 HP & UNDER)	$35.69	1T	5D	8L
BACKHOES, (OVER 75 HP)	$36.05	1T	5D	8L
BARRIER MACHINE (ZIPPER)	$36.05	1T	5D	8L
BATCH PLANT OPERATOR, CONCRETE	$36.05	1T	5D	8L
BELT LOADERS (ELEVATING TYPE)	$35.69	1T	5D	8L
BOBCAT	$33.59	1T	5D	8L
BROOMS	$33.59	1T	5D	8L
BUMP CUTTER	$36.05	1T	5D	8L
CABLEWAYS	$36.49	1T	5D	8L
CHIPPER	$36.05	1T	5D	8L
COMPRESSORS	$33.59	1T	5D	8L
CONCRETE FINISH MACHINE - LASER SCREED	$33.59	1T	5D	8L
CONCRETE PUMPS	$35.69	1T	5D	8L
CONCRETE PUMP-TRUCK MOUNT WITH BOOM ATTACHMENT	$36.05	1T	5D	8L
CONVEYORS	$35.69	1T	5D	8L
CRANES, THRU 19 TONS, WITH ATTACHMENTS	$35.69	1T	5D	8L
CRANES, 20 - 44 TONS, WITH ATTACHMENTS	$36.05	1T	5D	8L
CRANES, 45 TONS - 99 TONS, UNDER 150 FT OF BOOM (INCLUDING JIB WITH ATACHMENTS)	$36.49	1T	5D	8L
CRANES, 100 TONS - 199 TONS, OR 150 FT OF BOOM (INCLUDING JIB WITH ATTACHMENTS)	$36.99	1T	5D	8L
CRANES, 200 TONS TO 300 TONS, OR 250 FT OF BOOM (INCLUDING JIB WITH ATTACHMENTS)	$37.49	1T	5D	8L
CRANES, A-FRAME, 10 TON AND UNDER	$33.59	1T	5D	8L
CRANES, A-FRAME, OVER 10 TON	$35.69	1T	5D	8L
CRANES, OVER 300 TONS, OR 300' OF BOOM INCLUDING JIB WITH ATTACHMENTS	$37.99	1T	5D	8L
CRANES, OVERHEAD, BRIDGE TYPE (20 - 44 TONS)	$36.05	1T	5D	8L
CRANES, OVERHEAD, BRIDGE TYPE (45 - 99 TONS)	$36.49	1T	5D	8L
CRANES, OVERHEAD, BRIDGE TYPE (100 TONS & OVER)	$36.99	1T	5D	8L
CRANES, TOWER CRANE UP TO 175' IN HEIGHT, BASE TO BOOM	$36.99	1T	5D	8L
CRANES, TOWER CRANE OVER 175' IN HEIGHT, BASE TO BOOM	$37.49	1T	5D	8L
CRUSHERS	$36.05	1T	5D	8L
DECK ENGINEER/DECK WINCHES (POWER)	$36.05	1T	5D	8L
DERRICK, BUILDING	$36.49	1T	5D	8L
DOZERS, D-9 & UNDER	$35.69	1T	5D	8L
DRILL OILERS - AUGER TYPE, TRUCK OR CRANE MOUNT	$35.69	1T	5D	8L
DRILLING MACHINE	$36.05	1T	5D	8L
ELEVATOR AND MANLIFT, PERMANENT AND SHAFT-TYPE	$33.59	1T	5D	8L
EQUIPMENT SERVICE ENGINEER (OILER)	$35.69	1T	5D	8L
FINISHING MACHINE/BIDWELL GAMACO AND SIMILAR EQUIP	$36.05	1T	5D	8L
FORK LIFTS, (3000 LBS AND OVER)	$35.69	1T	5D	8L
FORK LIFTS, (UNDER 3000 LBS)	$33.59	1T	5D	8L
GRADE ENGINEER	$35.69	1T	5D	8L

KING COUNTY

Effective 08-31-01

****

*

Classification	PREVAILING WAGE	(See Benefit Code Key) Over Time Code	Holiday Code	Note Code
GRADECHECKER AND STAKEMAN	$33.59	1T	5D	8L
HOISTS, OUTSIDE (ELEVATORS AND MANLIFTS), AIR TUGGERS	$35.69	1T	5D	8L
HORIZONTAL/DIRECTIONAL DRILL LOCATOR	$35.69	1T	5D	8L
HORIZONTAL/DIRECTIONAL DRILL OPERATOR	$36.05	1T	5D	8L
HYDRALIFTS/BOOM TRUCKS (10 TON & UNDER)	$33.59	1T	5D	8L
HYDRALIFTS/BOOM TRUCKS (OVER 10 TON)	$35.69	1T	5D	8L
LOADERS, OVERHEAD (6 YD UP TO 8 YD)	$36.49	1T	5D	8L
LOADERS, OVERHEAD (8 YD & OVER)	$36.99	1T	5D	8L
LOADERS, OVERHEAD (UNDER 6 YD), PLANT FEED	$36.05	1T	5D	8L
LOCOMOTIVES, ALL	$36.05	1T	5D	8L
MECHANICS, ALL	$36.05	1T	5D	8L
MIXERS, ASPHALT PLANT	$36.05	1T	5D	8L
MOTOR PATROL GRADER (FINISHING)	$36.05	1T	5D	8L
MOTOR PATROL GRADER (NON-FINISHING)	$35.69	1T	5D	8L
MUCKING MACHINE, MOLE, TUNNEL DRILL AND/OR SHIELD	$36.49	1T	5D	8L
OIL DISTRIBUTORS, BLOWER DISTRIBUTION AND MULCH SEEDING OPERATOR	$33.59	1T	5D	8L
PAVEMENT BREAKER	$33.59	1T	5D	8L
PILEDRIVER (OTHER THAN CRANE MOUNT)	$36.05	1T	5D	8L
PLANT OILER (ASPHALT CRUSHER)	$35.69	1T	5D	8L
POSTHOLE DIGGER, MECHANICAL	$33.59	1T	5D	8L
POWER PLANT	$33.59	1T	5D	8L
PUMPS, WATER	$33.59	1T	5D	8L
QUAD 9, D-10, AND HD-41	$36.49	1T	5D	8L
REMOTE CONTROL OPERATOR ON RUBBER TIRED EARTH MOVING EQUIP	$36.49	1T	5D	8L
RIGGER AND BELLMAN	$33.59	1T	5D	8L
ROLLAGON	$36.49	1T	5D	8L
ROLLER, OTHER THAN PLANT ROAD MIX	$33.59	1T	5D	8L
ROLLERS, PLANTMIX OR MULTILIFT MATERIALS	$35.69	1T	5D	8L
ROTO-MILL, ROTO-GRINDER	$36.05	1T	5D	8L
SAWS, CONCRETE	$35.69	1T	5D	8L
SCRAPERS - SELF PROPELLED, HARD TAIL END DUMP, ARTICULATING OFF-ROAD EQUIPMENT (UNDER 45 YD)	$36.05	1T	5D	8L
SCRAPERS - SELF PROPELLED, HARD TAIL END DUMP, ARTICULATING OFF-ROAD EQUIPMENT (45 YD AND OVER)	$36.49	1T	5D	8L
SCRAPERS, CONCRETE AND CARRY ALL	$35.69	1T	5D	8L
SCREED MAN	$36.05	1T	5D	8L
SHOTCRETE GUNITE	$33.59	1T	5D	8L
SLIPFORM PAVERS	$36.49	1T	5D	8L
SPREADER, TOPSIDE OPERATOR - BLAW KNOX	$36.05	1T	5D	8L
SUBGRADE TRIMMER	$36.05	1T	5D	8L
TRACTORS, (75 HP & UNDER)	$35.69	1T	5D	8L
TRACTORS, (OVER 75 HP)	$36.05	1T	5D	8L
TRANSFER MATERIAL SERVICE MACHINE	$36.05	1T	5D	8L
TRANSPORTERS, ALL TRACK OR TRUCK TYPE	$36.49	1T	5D	8L
TRENCHING MACHINES	$35.69	1T	5D	8L
TRUCK CRANE OILER/DRIVER (UNDER 100 TON)	$35.69	1T	5D	8L
TRUCK CRANE OILER/DRIVER (100 TON & OVER)	$36.05	1T	5D	8L
WHEEL TRACTORS, FARMALL TYPE	$33.59	1T	5D	8L
YO YO PAY DOZER	$36.05	1T	5D	8L
POWER LINE CLEARANCE TREE TRIMMERS				
JOURNEY LEVEL IN CHARGE	$28.90	4A	5A	
SPRAY PERSON	$27.34	4A	5A	
TREE EQUIPMENT OPERATOR	$27.72	4A	5A	
TREE TRIMMER	$25.64	4A	5A	
TREE TRIMMER GROUNDPERSON	$18.70	4A	5A	
REFRIGERATION & AIR CONDITIONING MECHANICS				
MECHANIC	$41.86	1G	5A	

KING COUNTY

Effective 08-31-01

****

*

Classification	PREVAILING WAGE	(See Benefit Code Key) Over Time Code	Holiday Code	Note Code
ROOFERS				
JOURNEY LEVEL	$31.03	1R	5A	
USING IRRITABLE BITUMINOUS MATERIALS	$34.03	1R	5A	
SHEET METAL WORKERS				
JOURNEY LEVEL (FIELD OR SHOP)	$39.68	1J	6L	
SIGN MAKER	$16.84	1		
SIGN MAKER	$15.61	1		
SOFT FLOOR LAYERS				
JOURNEY LEVEL	$30.60	1B	5A	
SOLAR CONTROLS FOR WINDOWS				
JOURNEY LEVEL	$12.44	1	5S	
SPRINKLER FITTERS (FIRE PROTECTION)				
JOURNEY LEVEL	$42.43	1B	5C	
SURVEYORS				
CHAIN PERSON	$9.35	1		
INSTRUMENT PERSON	$11.40	1		
PARTY CHIEF	$13.40	1		
TELEPHONE LINE CONSTRUCTION - OUTSIDE				
CABLE SPLICER	$24.74	2B	5A	
HOLE DIGGER/GROUND PERSON	$13.18	2B	5A	
INSTALLER (REPAIRER)	$23.66	2B	5A	
JOURNEY LEVEL TELEPHONE LINEPERSON	$22.91	2B	5A	
SPECIAL APPARATUS INSTALLER I	$24.74	2B	5A	
SPECIAL APPARATUS INSTALLER II	$24.21	2B	5A	
TELEPHONE EQUIPMENT OPERATOR (HEAVY)	$24.74	2B	5A	
TELEPHONE EQUIPMENT OPERATOR (LIGHT)	$22.91	2B	5A	
TELEVISION GROUND PERSON	$12.42	2B	5A	
TELEVISION LINEPERSON/INSTALLER	$17.02	2B	5A	
TELEVISION SYSTEM TECHNICIAN	$20.54	2B	5A	
TELEVISION TECHNICIAN	$18.33	2B	5A	
TREE TRIMMER	$22.91	2B	5A	
TERRAZZO WORKERS & TILE SETTERS				
JOURNEY LEVEL	$32.83	1H	5A	
TILE, MARBLE & TERRAZZO FINISHERS				
FINISHER	$26.66	1H	5A	
TRAFFIC CONTROL STRIPERS				
JOURNEY LEVEL	$27.67	1K	5A	
TRUCK DRIVERS				
ASPHALT MIX (TO 16 YARDS)	$33.48	1T	5D	8L
ASPHALT MIX (OVER 16 YARDS)	$34.06	1T	5D	8L
DUMP TRUCK	$33.48	1T	5D	8L
DUMP TRUCK & TRAILER	$34.06	1T	5D	8L
OTHER TRUCKS	$34.06	1T	5D	8L
TRANSIT MIXER	$23.45	1		
WELL DRILLERS & IRRIGATION PUMP INSTALLERS				
IRRIGATION PUMP INSTALLER	$17.71	1		
OILER	$12.97	1		
WELL DRILLER	$17.68	1		

CABINET MAKERS (IN SHOP)

EFFECTIVE 08-31-01

Classification	PREVAILING WAGE	Over Time Code	Holiday Code	Note Code
		(See Benefit Code Key)		
Counties Covered: **ADAMS, ASOTIN, BENTON, CHELAN, COLUMBIA, DOUGLAS, FERRY, FRANKLIN, GARFIELD, GRANT, KITTITAS, LINCOLN, OKANOGAN, PEND OREILLE, STEVENS, WALLA WALLA, WHITMAN AND YAKIMA**				
JOURNEY LEVEL	$8.45	1		
Counties Covered: **CLALLAM, CLARK, COWLITZ, GRAYS HARBOR, ISLAND, JEFFERSON, KITSAP, KLICKITAT, LEWIS, MASON, PACIFIC, SAN JUAN, SKAGIT, SKAMANIA, SNOHOMISH, THURSTON, WAHKIAKUM AND WHATCOM**				
JOURNEY LEVEL	$13.12	1		
Counties Covered: **KING**				
JOURNEY LEVEL	$11.71	1		
Counties Covered: **PIERCE**				
JOURNEY LEVEL	$11.69	1		
Counties Covered: **SPOKANE**				
JOURNEY LEVEL	$9.72	1		

FABRICATED PRECAST CONCRETE PRODUCTS

EFFECTIVE 08-31-01

(See Benefit Code Key)

Classification	PREVAILING WAGE	Over Time Code	Holiday Code	Note Code
Counties Covered: ADAMS, ASOTIN, BENTON, COLUMBIA, DOUGLAS, FERRY, FRANKLIN, GARFIELD, GRANT, LINCOLN, OKANOGAN, PEND OREILLE, STEVENS, WALLA WALLA AND WHITMAN				
ALL CLASSIFICATIONS	$9.96	1		
Counties Covered: CHELAN, KITTITAS, KLICKITAT AND SKAMANIA				
ALL CLASSIFICATIONS	$8.61	1		
Counties Covered: CLALLAM, CLARK, COWLITZ, GRAYS HARBOR, ISLAND, JEFFERSON, KITSAP, LEWIS, MASON, PACIFIC, SAN JUAN, SKAGIT, SNOHOMISH, THURSTON AND WAHKIAKUM				
ALL CLASSIFICATIONS	$13.50	1		
Counties Covered: KING				
ARCHITECTURAL AND PRESTRESSED CONCRETE - All Classifications	$10.60	1		
ALL OTHER CONCRETE PRODUCTS - Carpenter	$18.77	1B	6S	
ALL OTHER CONCRETE PRODUCTS - Clean-up	$17.99	1B	6S	
ALL OTHER CONCRETE PRODUCTS - Fabricator	$18.24	1B	6S	
ALL OTHER CONCRETE PRODUCTS - Gunite	$18.24	1B	6S	
ALL OTHER CONCRETE PRODUCTS - Maintenance	$18.77	1B	6S	
ALL OTHER CONCRETE PRODUCTS - Operator	$18.24	1B	6S	
ALL OTHER CONCRETE PRODUCTS - Welder	$18.24	1B	6S	
ALL OTHER CONCRETE PRODUCTS - Wet Pour	$17.99	1B	6S	
ALL OTHER CONCRETE PRODUCTS - Yard Patch	$17.99	1B	6S	
Counties Covered: PIERCE				
ALL CLASSIFICATIONS	$10.00	1		
Counties Covered: SPOKANE				
LABORER	$6.72	1		
MACHINE OPERATOR	$10.33	1		
Counties Covered: WHATCOM				
CARPENTER	$11.43	1		
CONCRETE FINISHER	$12.53	1		

KCSlip4 34047

SEA400594

FABRICATED PRECAST CONCRETE PRODUCTS

EFFECTIVE 08-31-01

(See Benefit Code Key)

Classification	PREVAILING WAGE	Over Time Code	Holiday Code	Note Code
LABORER	$8.43	1		
REBAR	$14.60	1		

Counties Covered:

YAKIMA

CRAFTSMAN	$8.65	1		
LABORER	$6.72	1		
PRODUCTION WORKER	$7.15	1		

INDUSTRIAL ENGINE AND MACHINE MECHANICS

EFFECTIVE 08-31-01

Classification	PREVAILING WAGE	Over Time Code	Holiday Code	Note Code
		(See Benefit Code Key)		

Counties Covered:

ADAMS, ASOTIN, BENTON, CHELAN, CLALLAM, CLARK, COLUMBIA, COWLITZ, DOUGLAS, FERRY, FRANKLIN, GARFIELD, GRANT, GRAYS HARBOR, ISLAND, JEFFERSON, KING, KITSAP, KITTITAS, KLICKITAT, LEWIS, LINCOLN, MASON, OKANOGAN, PACIFIC, PEND OREILLE, PIERCE, SAN JUAN, SKAGIT, SKAMANIA, SNOHOMISH, SPOKANE, STEVENS, THURSTON, WAHKIAKUM, WALLA WALLA, WHATCOM, WHITMAN AND YAKIMA

MECHANIC	$15.65	1		

KCSlip4 34049

SEA400596

METAL FABRICATION (IN SHOP)

EFFECTIVE 08-31-01

(See Benefit Code Key)

Classification	PREVAILING WAGE	Over Time Code	Holiday Code	Co
Counties Covered: ADAMS, ASOTIN, COLUMBIA, DOUGLAS, FERRY, FRANKLIN, GARFIELD, KITTITAS, LINCOLN, OKANOGAN, PEND OREILLE, STEVENS, WALLA WALLA AND WHITMAN				
FITTER/WELDER	$12.76	1		
LABORER	$8.13	1		
MACHINE OPERATOR	$12.66	1		
PAINTER	$10.20	1		
Counties Covered: BENTON				
LABORER	$7.06	1		
MACHINE OPERATOR	$10.53	1		
PAINTER	$9.76	1		
WELDER	$16.70	1		
Counties Covered: CHELAN				
FITTER	$15.04	1		
LABORER	$8.77	1		
MACHINE OPERATOR	$9.71	1		
PAINTER	$9.93	1		
WELDER	$12.24	1		
Counties Covered: CLALLAM, GRAYS HARBOR, ISLAND, JEFFERSON, LEWIS, MASON, PACIFIC, SAN JUAN AND SKAGIT				
FITTER/WELDER	$15.16	1		
LABORER	$11.13	1		
MACHINE OPERATOR	$10.66	1		
PAINTER	$11.41	1		
Counties Covered: CLARK				
FITTER	$22.64	1J	6U	
LABORER	$16.49	1J	6U	
LAYEROUT	$22.98	1J	6U	
MACHINE OPERATOR	$17.00	1J	6U	
PAINTER	$19.57	1J	6U	
WELDER	$21.54	1J	6U	
Counties Covered: COWLITZ				
FITTER	$22.03	1B	6V	

METAL FABRICATION (IN SHOP)

EFFECTIVE 08-31-01

(See Benefit Code Key)

Classification	PREVAILING WAGE	Over Time Code	Holiday Code	Not Cod
LABORER	$17.17	1B	6V	
MACHINE OPERATOR	$22.03	1B	6V	
WELDER	$22.03	1B	6V	

Counties Covered:

GRANT

FITTER/WELDER	$10.79	1		
PAINTER	$7.45	1		

Counties Covered:

KING

FITTER	$15.86	1		
LABORER	$9.78	1		
MACHINE OPERATOR	$13.04	1		
PAINTER	$11.10	1		
WELDER	$15.48	1		

Counties Covered:

KITSAP

FITTER	$26.96	1		
LABORER	$6.72	1		
MACHINE OPERATOR	$13.83	1		
WELDER	$13.83	1		

Counties Covered:

KLICKITAT, SKAMANIA AND WAHKIAKUM

FITTER/WELDER	$16.99	1		
LABORER	$10.44	1		
MACHINE OPERATOR	$17.21	1		
PAINTER	$17.03	1		

Counties Covered:

PIERCE

FITTER	$15.25	1		
LABORER	$9.25	1		
MACHINE OPERATOR	$13.98	1		
WELDER	$13.98	1		

Counties Covered:

SNOHOMISH

FITTER/WELDER	$15.38	1		
LABORER	$9.79	1		
MACHINE OPERATOR	$8.84	1		
PAINTER	$9.98	1		

(See Benefit Code Key)

Classification	PREVAILING WAGE	Over Time Code	Holiday Code	Note Code
Counties Covered: SPOKANE				
FITTER	$12.59	1		
LABORER	$7.98	1		
MACHINE OPERATOR	$13.26	1		
PAINTER	$10.27	1		
WELDER	$10.80	1		
Counties Covered: THURSTON				
FITTER	$20.85	1R	6T	
LABORER	$11.33	1R	6T	
LAYEROUT	$22.74	1R	6T	
MACHINE OPERATOR	$15.13	1R	6T	
WELDER	$18.93	1R	6T	
Counties Covered: WHATCOM				
FITTER/WELDER	$13.81	1		
LABORER	$9.00	1		
MACHINE OPERATOR	$13.81	1		
Counties Covered: YAKIMA				
FITTER	$12.00	1		
LABORER	$10.31	1		
MACHINE OPERATOR	$11.32	1		
PAINTER	$12.00	1		
WELDER	$11.32	1		

KCSlip4 34052

SEA400599

(See Benefit Code Key)

Classification	PREVAILING WAGE	Over Time Code	Holiday Code	Note Code
Counties Covered: **CHELAN, DOUGLAS, KITTITAS AND YAKIMA**				
JOURNEY LEVEL	$14.11	1		
Counties Covered: **GRAYS HARBOR, LEWIS, MASON, PACIFIC AND THURSTON**				
CABINET ASSEMBLY	$9.98	1		
ELECTRICIAN	$9.98	1		
EQUIPMENT MAINTENANCE	$9.98	1		
PLUMBER	$9.98	1		
PRODUCTION WORKER	$9.75	1		
TOOL MAINTENANCE	$9.98	1		
UTILITY PERSON	$9.98	1		
WELDER	$9.98	1		
Counties Covered: **KING AND KITSAP**				
CABINET ASSEMBLY	$11.56	1		
ELECTRICIAN	$11.56	1		
EQUIPMENT MAINTENANCE	$11.56	1		
PLUMBER	$11.56	1		
PRODUCTION WORKER	$9.26	1		
TOOL MAINTENANCE	$11.56	1		
UTILITY PERSON	$11.56	1		
WELDER	$11.56	1		
Counties Covered: **SNOHOMISH**				
JOURNEY LEVEL	$9.00	1		

KCSlip4 34053

SEA400600

SHEET METAL WORKERS

EFFECTIVE 08-31-01

(See Benefit Code Key)

Classification	PREVAILING WAGE	Over Time Code	Holiday Code	Not Code
Counties Covered: ADAMS, ASOTIN, CHELAN, DOUGLAS, FERRY, GRANT, LINCOLN, OKANOGAN, PEND OREILLE, SPOKANE, STEVENS AND WHITMAN				
JOURNEY LEVEL (FIELD OR SHOP)	$31.18	1B	5A	
Counties Covered: BENTON, COLUMBIA, FRANKLIN, GARFIELD, KITTITAS, KLICKITAT, WALLA WALLA AND YAKIMA				
JOURNEY LEVEL (FIELD OR SHOP)	$34.29	1B	5A	
Counties Covered: CLALLAM, COWLITZ, GRAYS HARBOR, ISLAND, KING, KITSAP, LEWIS, MASON, PACIFIC, PIERCE, SNOHOMISH, THURSTON AND WAHKIAKUM				
JOURNEY LEVEL (FIELD OR SHOP)	$39.68	1J	6L	
Counties Covered: CLARK AND SKAMANIA				
JOURNEY LEVEL (FIELD OR SHOP)	$36.93	1B	5A	
Counties Covered: JEFFERSON				
JOURNEY LEVEL (FIELD OR SHOP)	$33.53	1		
Counties Covered: SAN JUAN, SKAGIT AND WHATCOM				
JOURNEY LEVEL (FIELD OR SHOP)	$35.65	1J	5G	

KCSlip4 34054

SEA400601

SIGN MAKERS & INSTALLERS (ELECTRICAL)

EFFECTIVE 08-31-01

(See Benefit Code Key)

Classification	PREVAILING WAGE	Over Time Code	Holiday Code	Note Code
Counties Covered: ADAMS, FERRY, LINCOLN, PEND OREILLE, SPOKANE, STEVENS AND WHITMAN				
JOURNEY LEVEL	$13.91	1		
Counties Covered: CHELAN, DOUGLAS, GRANT AND OKANOGAN				
JOURNEY LEVEL	$24.63	1		
Counties Covered: CLALLAM AND JEFFERSON				
JOURNEY LEVEL	$19.29	1		
Counties Covered: CLARK				
JOURNEY LEVEL	$19.27	1		
Counties Covered: COWLITZ AND WAHKIAKUM				
JOURNEY LEVEL	$16.88	1		
Counties Covered: GRAYS HARBOR, LEWIS, MASON, PACIFIC AND THURSTON				
JOURNEY LEVEL	$18.04	1		
Counties Covered: ISLAND, SKAGIT AND WHATCOM				
JOURNEY LEVEL	$16.03	1		
Counties Covered: KING				
SIGN INSTALLER	$23.36	1		
SIGN MAKER	$16.84	1		
Counties Covered: KITSAP				
JOURNEY LEVEL	$20.58	1		

KCSlip4 34055

SEA400602

SIGN MAKERS & INSTALLERS (ELECTRICAL)

EFFECTIVE 08-31-01

(See Benefit Code Key)

Classification	PREVAILING WAGE	Over Time Code	Holiday Code	Note Code
	Counties Covered: **KLICKITAT AND SKAMANIA**			
JOURNEY LEVEL	$16.83	1		
	Counties Covered: **PIERCE AND SNOHOMISH**			
JOURNEY LEVEL	$26.17	1		
	Counties Covered: **SAN JUAN**			
JOURNEY LEVEL	$9.75	1R		

SIGN MAKERS & INSTALLERS (NON-ELECTRICAL)

EFFECTIVE 08-31-01

(See Benefit Code Key)

Classification	PREVAILING WAGE	Over Time Code	Holiday Code	Note Code
Counties Covered: ADAMS, FERRY, LINCOLN, PEND OREILLE, STEVENS AND WHITMAN				
JOURNEY LEVEL	$13.91	1		
Counties Covered: ASOTIN, BENTON, COLUMBIA, FRANKLIN, GARFIELD, GRANT, KITTITAS, WALLA WALLA AND YAKIMA				
JOURNEY LEVEL	$14.65	1		
Counties Covered: CHELAN, DOUGLAS AND OKANOGAN				
JOURNEY LEVEL	$16.14	1		
Counties Covered: CLALLAM AND JEFFERSON				
JOURNEY LEVEL	$12.15	1		
Counties Covered: CLARK				
JOURNEY LEVEL	$29.02	1H	5A	
Counties Covered: COWLITZ AND WAHKIAKUM				
JOURNEY LEVEL	$16.74	1		
Counties Covered: GRAYS HARBOR, MASON AND PACIFIC				
JOURNEY LEVEL	$18.04	1		
Counties Covered: ISLAND AND WHATCOM				
JOURNEY LEVEL	$26.55	1		
Counties Covered: KING				
SIGN INSTALLER	$17.31	1.		
SIGN MAKER	$15.61	1		

SIGN MAKERS & INSTALLERS (NON-ELECTRICAL)

EFFECTIVE 08-31-01

(See Benefit Code Key)

Classification	PREVAILING WAGE	Over Time Code	Holiday Code	Note Code
Counties Covered: **KITSAP**				
JOURNEY LEVEL	$9.27	1		
Counties Covered: **KLICKITAT AND SKAMANIA**				
JOURNEY LEVEL	$16.83	1		
Counties Covered: **LEWIS, SKAGIT AND SNOHOMISH**				
JOURNEY LEVEL	$29.67	1M	5D	
Counties Covered: **PIERCE**				
JOURNEY LEVEL	$15.31	1		
Counties Covered: **SAN JUAN**				
JOURNEY LEVEL	$9.75	1		
Counties Covered: **SPOKANE**				
JOURNEY LEVEL	$8.00	1		
Counties Covered: **THURSTON**				
JOURNEY LEVEL	$14.04	1		

KCSlip4 34058

SEA400605

BENEFIT CODE KEY - EFFECTIVE 08-31-01

****

OVERTIME CODES

OVERTIME CALCULATIONS ARE BASED ON THE HOURLY RATE ACTUALLY PAID TO THE WORKER. ON PUBLIC WORKS PROJECTS, THE HOURLY RATE MUST BE NOT LESS THAN THE PREVAILING RATE OF WAGE MINUS THE HOURLY RATE OF THE COST OF FRINGE BENEFITS ACTUALLY PROVIDED FOR THE WORKER.

1. ALL HOURS WORKED IN EXCESS OF EIGHT (8) HOURS PER DAY OR FORTY (40) HOURS PER WEEK SHALL BE PAID AT ONE AND ONE-HALF TIMES THE HOURLY RATE OF WAGE.

A. ALL HOURS WORKED ON SATURDAYS, SUNDAYS AND HOLIDAYS SHALL ALSO BE PAID AT ONE AND ONE-HALF TIMES THE HOURLY RATE OF WAGE.

B. ALL HOURS WORKED ON SATURDAYS SHALL BE PAID AT ONE AND ONE-HALF TIMES THE HOURLY RATE OF WAGE. ALL HOURS WORKED ON SUNDAYS AND HOLIDAYS SHALL BE PAID AT DOUBLE THE HOURLY RATE OF WAGE.

C. ALL HOURS WORKED ON SUNDAYS SHALL BE PAID AT DOUBLE THE HOURLY RATE OF WAGE.

D. THE FIRST EIGHT (8) HOURS ON SATURDAYS OF A FIVE - EIGHT HOUR WORK WEEK AND THE FIRST EIGHT (8) HOURS WORKED ON A FIFTH CALENDAR DAY, EXCLUDING SUNDAY, IN A FOUR - TEN HOUR SCHEDULE, SHALL BE PAID AT ONE AND ONE-HALF TIMES THE HOURLY RATE OF WAGE. ALL HOURS WORKED IN EXCESS OF EIGHT (8) HOURS PER DAY ON SATURDAY; ALL HOURS WORKED IN EXCESS OF EIGHT (8) HOURS IN A FIFTH CALENDAR WEEKDAY OF A FOUR - TEN HOUR SCHEDULE; ALL HOURS WORKED IN EXCESS OF TEN (10) HOURS PER DAY MONDAY THROUGH FRIDAY, AND ALL HOURS WORKED ON SUNDAYS AND HOLIDAYS SHALL BE PAID AT DOUBLE THE HOURLY RATE OF WAGE.

F. THE FIRST EIGHT (8) HOURS ON SATURDAY SHALL BE PAID AT ONE AND ONE-HALF TIMES THE HOURLY RATE OF WAGE. ALL HOURS WORKED IN EXCESS OF EIGHT (8) HOURS ON SATURDAY, AND ALL HOURS WORKED ON SUNDAYS AND HOLIDAYS (EXCEPT LABOR DAY) SHALL BE PAID AT DOUBLE THE HOURLY RATE OF WAGE. ALL HOURS WORKED ON LABOR DAY SHALL BE PAID AT THREE TIMES THE HOURLY RATE OF WAGE.

G. THE FIRST TEN (10) HOURS WORKED ON SATURDAYS AND THE FIRST TEN (10) HOURS WORKED ON A FIFTH CALENDAR WEEKDAY IN A FOUR - TEN HOUR SCHEDULE, SHALL BE PAID AT ONE AND ONE-HALF TIMES THE HOURLY RATE OF WAGE. ALL HOURS WORKED IN EXCESS OF TEN (10) HOURS PER DAY MONDAY THROUGH SATURDAY, AND ALL HOURS WORKED ON SUNDAYS AND HOLIDAYS SHALL BE PAID AT DOUBLE THE HOURLY RATE OF WAGE.

H. ALL HOURS WORKED ON SATURDAYS (EXCEPT MAKEUP DAYS IF WORK IS LOST DUE TO INCLEMENT WEATHER CONDITIONS OR EQUIPMENT BREAKDOWN) SHALL BE PAID AT ONE AND ONE-HALF TIMES THE HOURLY RATE OF WAGE. ALL HOURS WORKED ON SUNDAYS AND HOLIDAYS SHALL BE PAID AT DOUBLE THE HOURLY RATE OF WAGE.

J. THE FIRST EIGHT (8) HOURS ON SATURDAY SHALL BE PAID AT ONE AND ONE-HALF TIMES THE HOURLY RATE OF WAGE. ALL HOURS WORKED IN EXCESS OF EIGHT (8) HOURS ON SATURDAY, AND ALL HOURS WORKED ON SUNDAYS AND HOLIDAYS SHALL BE PAID AT DOUBLE THE HOURLY RATE OF WAGE.

K. ALL HOURS WORKED ON SATURDAYS AND SUNDAYS SHALL BE PAID AT ONE AND ONE-HALF TIMES THE HOURLY RATE OF WAGE. ALL HOURS WORKED ON HOLIDAYS SHALL BE PAID AT DOUBLE THE HOURLY RATE OF WAGE.

L. ALL HOURS WORKED ON SATURDAYS, SUNDAYS AND HOLIDAYS (EXCEPT THANKSGIVING DAY AND CHRISTMAS DAY) SHALL BE PAID AT ONE AND ONE-HALF TIMES THE HOURLY RATE OF WAGE. ALL HOURS WORKED ON THANKSGIVING DAY AND CHRISTMAS DAY SHALL BE PAID AT DOUBLE THE HOURLY RATE OF WAGE.

M. ALL HOURS WORKED ON SATURDAYS (EXCEPT MAKEUP DAYS IF WORK IS LOST DUE TO INCLEMENT WEATHER CONDITIONS) SHALL BE PAID AT ONE AND ONE-HALF TIMES THE HOURLY RATE OF WAGE. ALL HOURS WORKED ON SUNDAYS AND HOLIDAYS SHALL BE PAID AT DOUBLE THE HOURLY RATE OF WAGE.

N. ALL HOURS WORKED ON SATURDAYS (EXCEPT MAKEUP DAYS) SHALL BE PAID AT ONE AND ONE-HALF TIMES THE HOURLY RATE OF WAGE. ALL HOURS WORKED ON SUNDAYS AND HOLIDAYS SHALL BE PAID AT DOUBLE THE HOURLY RATE OF WAGE.

P. ALL HOURS WORKED ON SATURDAYS (EXCEPT MAKEUP DAYS) AND SUNDAYS SHALL BE PAID AT ONE AND ONE-HALF TIMES THE HOURLY RATE OF WAGE. ALL HOURS WORKED ON HOLIDAYS SHALL BE PAID AT DOUBLE THE HOURLY RATE OF WAGE.

Q. ALL HOURS WORKED ON SATURDAYS SHALL BE PAID AT ONE AND ONE-HALF TIMES THE HOURLY RATE OF WAGE. ALL HOURS WORKED ON SUNDAYS AND HOLIDAYS (EXCEPT CHRISTMAS DAY) SHALL BE PAID AT DOUBLE THE HOURLY RATE OF WAGE. ALL HOURS WORKED ON CHRISTMAS DAY SHALL BE PAID AT TWO AND ONE-HALF TIMES THE HOURLY RATE OF WAGE.

R. ALL HOURS WORKED ON SUNDAYS AND HOLIDAYS SHALL BE PAID AT TWO TIMES THE HOURLY RATE OF WAGE.

1. S. ALL HOURS WORKED ON SUNDAYS BETWEEN THE HOURS OF 12:00AM SUNDAY AND 6:00AM MONDAY AND ON HOLIDAYS SHALL BE PAID AT DOUBLE THE HOURLY RATE OF WAGE.

T. ALL HOURS WORKED ON SATURDAYS, EXCEPT MAKE-UP DAYS, SHALL BE PAID AT ONE AND ONE-HALF TIMES THE HOURLY RATE OF WAGE. ALL HOURS WORKED AFTER 6:00PM SATURDAY TO 6:00AM MONDAY AND ON HOLIDAYS SHALL BE PAID AT DOUBLE THE HOURLY RATE OF WAGE.

U. ALL HOURS WORKED ON SATURDAYS SHALL BE PAID AT ONE AND ONE-HALF TIMES THE HOURLY RATE OF WAGE. ALL HOURS WORKED ON SUNDAYS AND HOLIDAYS (EXCEPT LABOR DAY) SHALL BE PAID AT TWO TIMES THE HOURLY RATE OF WAGE. ALL HOURS WORKED ON LABOR DAY SHALL BE PAID AT THREE TIMES THE HOURLY RATE OF WAGE.

W. ALL HOURS WORKED ON SATURDAYS AND SUNDAYS (EXCEPT MAKE-UP DAYS) SHALL BE PAID AT ONE AND ONE-HALF TIMES THE HOURLY RATE OF WAGE. ALL HOURS WORKED ON HOLIDAYS SHALL BE PAID AT TWO TIMES THE HOURLY RATE OF WAGE.

2. ALL HOURS WORKED IN EXCESS OF EIGHT (8) HOURS PER DAY OR FORTY (40) HOURS PER WEEK SHALL BE PAID AT ONE AND ONE-HALF TIMES THE HOURLY RATE OF WAGE.

A. THE FIRST SIX (6) HOURS ON SATURDAY SHALL BE PAID AT ONE AND ONE-HALF TIMES THE HOURLY RATE OF WAGE. ALL HOURS WORKED IN EXCESS OF SIX (6) HOURS ON SATURDAY AND ALL HOURS WORKED ON SUNDAYS AND HOLIDAYS SHALL BE PAID AT TWO TIMES THE HOURLY RATE OF WAGE.

B. ALL HOURS WORKED ON HOLIDAYS SHALL BE PAID AT ONE AND ONE-HALF TIMES THE HOURLY RATE OF WAGE.

C. ALL HOURS WORKED ON SUNDAYS SHALL BE PAID AT ONE AND ONE-HALF TIMES THE HOURLY RATE OF WAGE. ALL HOURS WORKED ON HOLIDAYS SHALL BE PAID AT TWO TIMES THE HOURLY RATE OF WAGE.

D. ALL HOURS WORKED ON SATURDAYS AND SUNDAYS SHALL BE PAID AT ONE AND ONE-HALF TIMES THE HOURLY RATE OF WAGE. THE FIRST EIGHT (8) HOURS WORKED ON HOLIDAYS SHALL BE PAID AT STRAIGHT TIME IN ADDITION TO THE HOLIDAY PAY. ALL HOURS WORKED IN EXCESS OF EIGHT (8) HOURS ON HOLIDAYS SHALL BE PAID AT ONE AND ONE-HALF TIMES THE HOURLY RATE OF WAGE.

E. ALL HOURS WORKED ON SATURDAYS OR HOLIDAYS (EXCEPT LABOR DAY) SHALL BE PAID AT ONE AND ONE-HALF TIMES THE HOURLY RATE OF WAGE. ALL HOURS WORKED ON SUNDAYS OR ON LABOR DAY SHALL BE PAID AT TWO TIMES THE HOURLY RATE OF WAGE.

F. THE FIRST EIGHT (8) HOURS WORKED ON HOLIDAYS SHALL BE PAID AT THE STRAIGHT HOURLY RATE OF WAGE IN ADDITION TO THE HOLIDAY PAY. ALL HOURS WORKED IN EXCESS OF EIGHT (8) HOURS ON HOLIDAYS SHALL BE PAID AT DOUBLE THE HOURLY RATE OF WAGE.

G. ALL HOURS WORKED ON SUNDAY SHALL BE PAID AT TWO TIMES THE HOURLY RATE OF WAGE. ALL HOURS WORKED ON PAID HOLIDAYS SHALL BE PAID AT TWO AND ONE-HALF TIMES THE HOURLY RATE OF WAGE INCLUDING HOLIDAY PAY.

J. ALL HOURS WORKED ON SUNDAYS SHALL BE PAID AT TWO TIMES THE HOURLY RATE OF WAGE. ALL HOURS WORKED ON PAID HOLIDAYS SHALL BE PAID AT TWO AND ONE-HALF TIMES THE HOURLY RATE OF WAGE, INCLUDING THE HOLIDAY PAY. ALL HOURS WORKED ON UNPAID HOLIDAYS SHALL BE PAID AT TWO TIMES THE HOURLY RATE OF WAGE.

M. ALL HOURS WORKED ON SATURDAYS, SUNDAYS AND HOLIDAYS SHALL BE PAID AT DOUBLE THE HOURLY RATE OF WAGE.

O. ALL HOURS WORKED ON SUNDAYS AND HOLIDAYS SHALL BE PAID AT ONE AND ONE-HALF TIMES THE HOURLY RATE OF WAGE.

4. A. ALL HOURS WORKED IN EXCESS OF EIGHT (8) HOURS PER DAY OR FORTY (40) HOURS PER WEEK SHALL BE PAID AT DOUBLE THE HOURLY RATE OF WAGE. ALL HOURS WORKED ON SATURDAYS, SUNDAYS AND HOLIDAYS SHALL BE PAID AT DOUBLE THE HOURLY RATE OF WAGE.

HOLIDAY CODES

5. A. HOLIDAYS: NEW YEAR'S DAY, MEMORIAL DAY, INDEPENDENCE DAY, LABOR DAY, THANKSGIVING DAY, FRIDAY AFTER THANKSGIVING DAY, AND CHRISTMAS DAY (7).

B. HOLIDAYS: NEW YEAR'S DAY, MEMORIAL DAY, INDEPENDENCE DAY, LABOR DAY, THANKSGIVING DAY, FRIDAY AFTER THANKSGIVING DAY, THE DAY BEFORE CHRISTMAS, AND CHRISTMAS DAY (8).

5. C. HOLIDAYS: NEW YEAR'S DAY, WASHINGTON'S BIRTHDAY, MEMORIAL DAY, INDEPENDENCE DAY, LABOR DAY,

THANKSGIVING DAY, THE FRIDAY AFTER THANKSGIVING DAY, AND CHRISTMAS DAY (8).

D. HOLIDAYS: NEW YEAR'S DAY, MEMORIAL DAY, INDEPENDENCE DAY, LABOR DAY, THANKSGIVING DAY, THE FRIDAY AND SATURDAY AFTER THANKSGIVING DAY, AND CHRISTMAS DAY (8).

G. HOLIDAYS: NEW YEAR'S DAY, MEMORIAL DAY, INDEPENDENCE DAY, LABOR DAY, THANKSGIVING DAY, THE LAST WORK DAY BEFORE CHRISTMAS DAY, AND CHRISTMAS DAY (7).

H. HOLIDAYS: NEW YEAR'S DAY, MEMORIAL DAY, INDEPENDENCE DAY, THANKSGIVING DAY, THE DAY AFTER THANKSGIVING DAY, AND CHRISTMAS (6).

I. HOLIDAYS: NEW YEAR'S DAY, MEMORIAL DAY, INDEPENDENCE DAY, LABOR DAY, THANKSGIVING DAY, AND CHRISTMAS DAY (6).

N. HOLIDAYS: NEW YEAR'S DAY, WASHINGTON'S BIRTHDAY, MEMORIAL DAY, INDEPENDENCE DAY, LABOR DAY, VETERANS' DAY, THANKSGIVING DAY, THE FRIDAY AFTER THANKSGIVING DAY, AND CHRISTMAS DAY (9).

O. PAID HOLIDAYS: NEW YEAR'S DAY, WASHINGTON'S BIRTHDAY, INDEPENDENCE DAY, LABOR DAY, THANKSGIVING DAY, AND CHRISTMAS DAY (6).

Q. PAID HOLIDAYS: NEW YEAR'S DAY, MEMORIAL DAY, INDEPENDENCE DAY, LABOR DAY, THANKSGIVING DAY, AND CHRISTMAS DAY (6).

R. PAID HOLIDAYS: NEW YEAR'S DAY, MEMORIAL DAY, INDEPENDENCE DAY, LABOR DAY, THANKSGIVING DAY, DAY AFTER THANKSGIVING DAY, ONE-HALF DAY BEFORE CHRISTMAS DAY, AND CHRISTMAS DAY. (7 1/2).

S. PAID HOLIDAYS: NEW YEAR'S DAY, PRESIDENT'S DAY, MEMORIAL DAY, INDEPENDENCE DAY, LABOR DAY, THANKSGIVING DAY, AND CHRISTMAS DAY (7).

T. PAID HOLIDAYS: SEVEN (7) PAID HOLIDAYS.

U. PAID HOLIDAYS: NEW YEAR'S DAY, WASHINGTON'S BIRTHDAY, INDEPENDENCE DAY, LABOR DAY, THANKSGIVING DAY, CHRISTMAS DAY, AND A DAY OF THE EMPLOYEES CHOICE (7).

V. PAID HOLIDAYS: SIX (6) PAID HOLIDAYS.

W. PAID HOLIDAYS: NINE (9) PAID HOLIDAYS.

X. HOLIDAYS: AFTER 520 HOURS - NEW YEAR'S DAY, THANKSGIVING DAY AND CHRISTMAS DAY. AFTER 2080 HOURS - NEW YEAR'S DAY, WASHINGTON'S BIRTHDAY, MEMORIAL DAY, INDEPENDENCE DAY, LABOR DAY, THANKSGIVING DAY, CHRISTMAS DAY AND A FLOATING HOLIDAY (8).

Y. HOLIDAYS: NEW YEAR'S DAY, MEMORIAL DAY, INDEPENDENCE DAY, LABOR DAY, PRESIDENTIAL ELECTION DAY, THANKSGIVING DAY, THE FRIDAY FOLLOWING THANKSGIVING DAY, AND CHRISTMAS DAY (8).

Z. HOLIDAYS: NEW YEAR'S DAY, MEMORIAL DAY, INDEPENDENCE DAY, LABOR DAY, VETERANS DAY, THANKSGIVING DAY, THE FRIDAY AFTER THANKSGIVING DAY, AND CHRISTMAS DAY (8).

6. A. PAID HOLIDAYS: NEW YEAR'S DAY, WASHINGTON'S BIRTHDAY, MEMORIAL DAY, INDEPENDENCE DAY, LABOR DAY, THANKSGIVING DAY, THE FRIDAY AFTER THANKSGIVING DAY, AND CHRISTMAS DAY (8).

C. HOLIDAYS: NEW YEAR'S DAY, WASHINGTON'S BIRTHDAY, MEMORIAL DAY, INDEPENDENCE DAY, LABOR DAY, THANKSGIVING DAY, THE DAY AFTER THANKSGIVING DAY, THE LAST WORK DAY BEFORE CHRISTMAS DAY, AND CHRISTMAS DAY (9).

D. PAID HOLIDAYS: NEW YEAR'S DAY, WASHINGTON'S BIRTHDAY, MEMORIAL DAY, INDEPENDENCE DAY, LABOR DAY, THANKSGIVING DAY, THE FRIDAY AFTER THANKSGIVING DAY, CHRISTMAS DAY, THE DAY BEFORE OR THE DAY AFTER CHRISTMAS DAY (9).

H. HOLIDAYS: NEW YEAR'S DAY, MARTIN LUTHER KING JR. DAY, MEMORIAL DAY, INDEPENDENCE DAY, LABOR DAY, THANKSGIVING DAY, THE FRIDAY AFTER THANKSGIVING DAY, AND CHRISTMAS DAY (8).

I. PAID HOLIDAYS: NEW YEAR'S DAY, MEMORIAL DAY, INDEPENDENCE DAY, LABOR DAY, THANKSGIVING DAY, FRIDAY AFTER THANKSGIVING DAY, AND CHRISTMAS DAY (7).

6. L. HOLIDAYS: NEW YEAR'S DAY, MEMORIAL DAY, INDEPENDENCE DAY, LABOR DAY, THANKSGIVING DAY, THE FRIDAY AFTER THANKSGIVING DAY, THE LAST WORKING DAY BEFORE CHRISTMAS DAY, AND CHRISTMAS DAY. (8)

Q. PAID HOLIDAYS: NEW YEAR'S DAY, MEMORIAL DAY, INDEPENDENCE DAY, LABOR DAY, THANKSGIVING DAY, THE DAY AFTER THANKSGIVING DAY AND CHRISTMAS DAY. UNPAID HOLIDAY: PRESIDENTS' DAY.

S. PAID HOLIDAYS: NEW YEAR'S DAY, MEMORIAL DAY, INDEPENDENCE DAY, LABOR DAY, THANKSGIVING DAY, THE FRIDAY AFTER THANKSGIVING DAY, CHRISTMAS EVE DAY, AND CHRISTMAS DAY (8).

T. PAID HOLIDAYS: NEW YEAR'S DAY, WASHINGTON'S BIRTHDAY, MEMORIAL DAY, INDEPENDENCE DAY, LABOR DAY, THANKSGIVING DAY, THE FRIDAY AFTER THANKSGIVING DAY, THE LAST WORKING DAY BEFORE CHRISTMAS DAY, AND CHRISTMAS DAY (9).

U. HOLIDAYS: NEW YEAR'S DAY, DAY BEFORE NEW YEAR'S DAY, MEMORIAL DAY, DAY BEFORE INDEPENDENCE DAY, INDEPENDENCE DAY, LABOR DAY, THANKSGIVING DAY, THE FRIDAY AFTER THANKSGIVING DAY, THE DAY BEFORE CHRISTMAS DAY, CHRISTMAS DAY (10).

V. PAID HOLIDAYS: NEW YEAR'S DAY, MEMORIAL DAY, INDEPENDENCE DAY, LABOR DAY, THANKSGIVING DAY, DAY AFTER THANKSGIVING DAY, CHRISTMAS EVE DAY, CHRISTMAS DAY, EMPLOYEE'S BIRTHDAY, AND ONE DAY OF THE EMPLOYEE'S CHOICE (10).

W. PAID HOLIDAYS: NEW YEAR'S DAY, DAY BEFORE NEW YEAR'S DAY, PRESIDENTS DAY, MEMORIAL DAY, INDEPENDENCE DAY, LABOR DAY, THANKSGIVING DAY, DAY AFTER THANKSGIVING DAY, CHRISTMAS DAY, DAY BEFORE CHRISTMAS DAY (10).

X. PAID HOLIDAYS: NEW YEAR'S DAY, DAY BEFORE OR AFTER NEW YEAR'S DAY, PRESIDENTS DAY, MEMORIAL DAY, INDEPENDENCE DAY, LABOR DAY, THANKSGIVING DAY, DAY AFTER THANKSGIVING DAY, CHRISTMAS DAY, DAY BEFORE OR AFTER CHRISTMAS DAY, EMPLOYEE'S BIRTHDAY (11).

NOTE CODES

8. A. THE STANDBY RATE OF PAY FOR DIVERS SHALL BE ONE-HALF TIMES THE DIVERS RATE OF PAY. IN ADDITION TO THE HOURLY WAGE AND FRINGE BENEFITS, THE FOLLOWING DEPTH PREMIUMS APPLY TO DEPTHS OF FIFTY FEET OR MORE:

OVER 50' TO 100' - $1.00 PER FOOT FOR EACH FOOT OVER 50 FEET
OVER 100' TO 175' - $2.25 PER FOOT FOR EACH FOOT OVER 100 FEET
OVER 175' TO 250' - $5.50 PER FOOT FOR EACH FOOT OVER 175 FEET
OVER 250' - DIVERS MAY NAME THEIR OWN PRICE, PROVIDED IT IS NO LESS THAN THE SCALE LISTED FOR 250 FEET

C. THE STANDBY RATE OF PAY FOR DIVERS SHALL BE ONE-HALF TIMES THE DIVERS RATE OF PAY. IN ADDITION TO THE HOURLY WAGE AND FRINGE BENEFITS, THE FOLLOWING DEPTH PREMIUMS APPLY TO DEPTHS OF FIFTY FEET OR MORE:

OVER 50' TO 100' - $1.00 PER FOOT FOR EACH FOOT OVER 50 FEET
OVER 100' TO 150' - $1.50 PER FOOT FOR EACH FOOT OVER 100 FEET
OVER 150' TO 200' - $2.00 PER FOOT FOR EACH FOOT OVER 150 FEET
OVER 200' - DIVERS MAY NAME THEIR OWN PRICE

D. WORKERS WORKING WITH SUPPLIED AIR ON HAZMAT PROJECTS RECEIVE AN ADDITIONAL $1.00 PER HOUR.

L. WORKERS ON HAZMAT PROJECTS RECEIVE ADDITIONAL HOURLY PREMIUMS AS FOLLOWS - LEVEL A: $0.75, LEVEL B: $0.50, AND LEVEL C: $0.25.

M. WORKERS ON HAZMAT PROJECTS RECEIVE ADDITIONAL HOURLY PREMIUMS AS FOLLOWS: LEVELS A & B: $1.00, LEVELS C & D: $0.50.

N. WORKERS ON HAZMAT PROJECTS RECEIVE ADDITIONAL HOURLY PREMIUMS AS FOLLOWS - LEVEL A: $1.00, LEVEL B: $0.75, LEVEL C: $0.50, AND LEVEL D: $0.25.