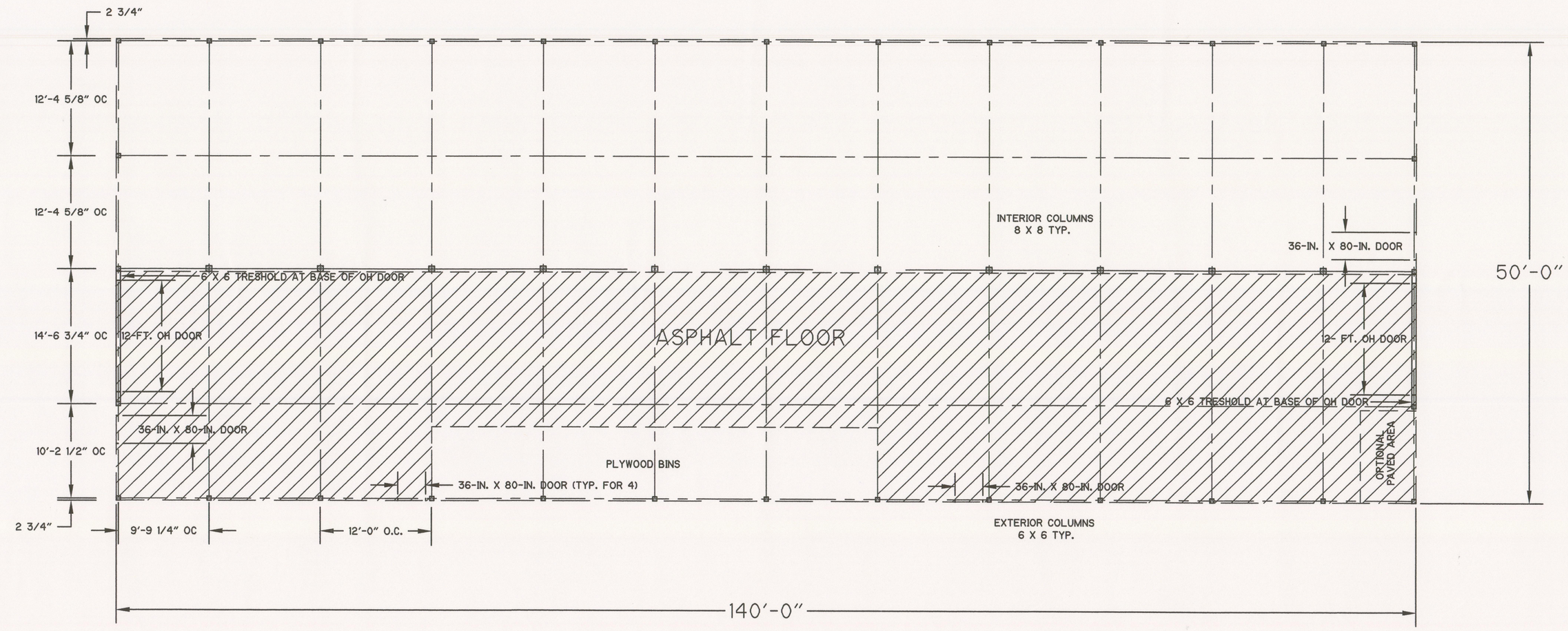

BUILDING #1

SCALE: 1/8" = 1'-0"

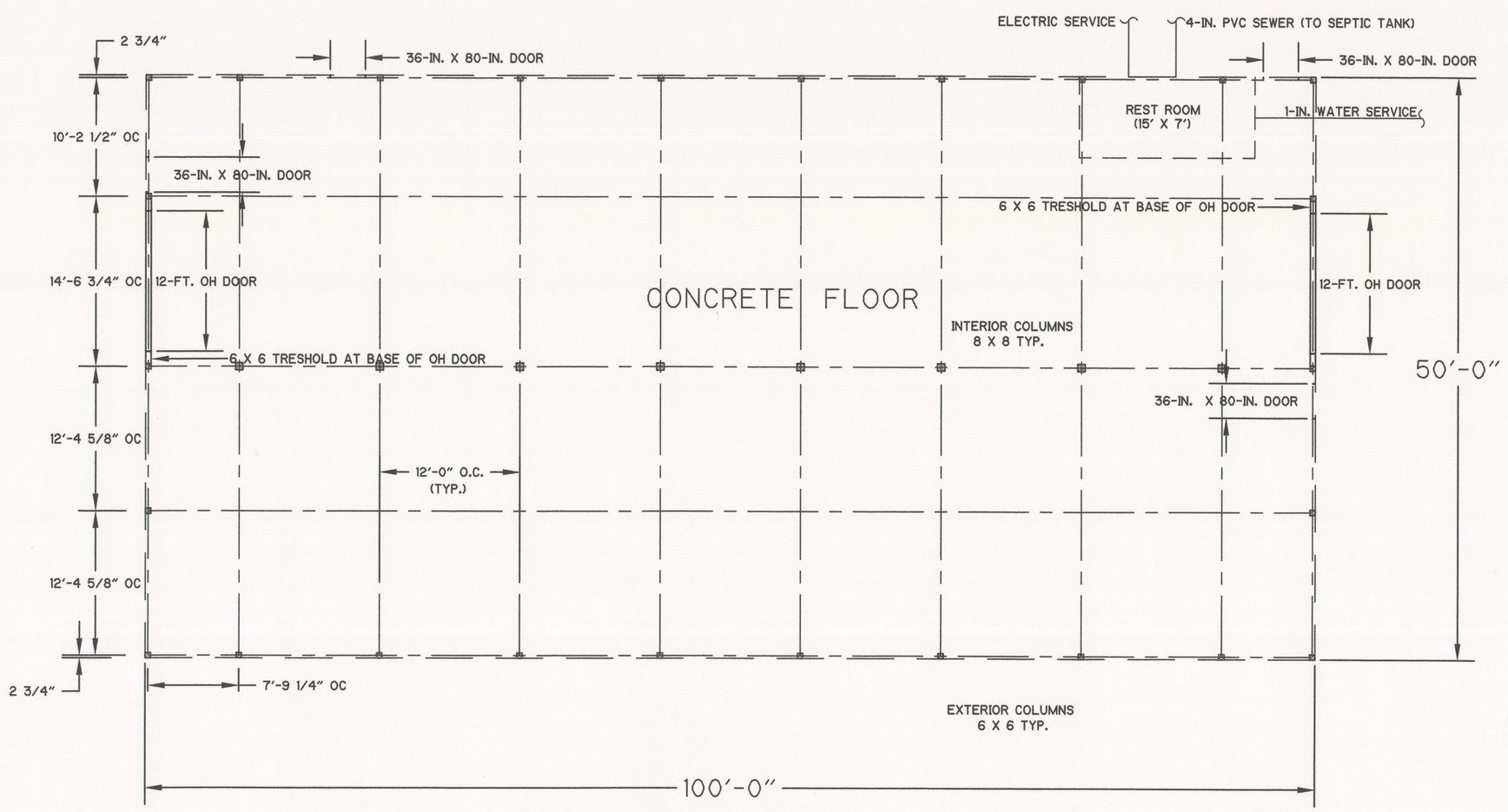

BUILDING #2

SCALE: 1/8" = 1'-0"

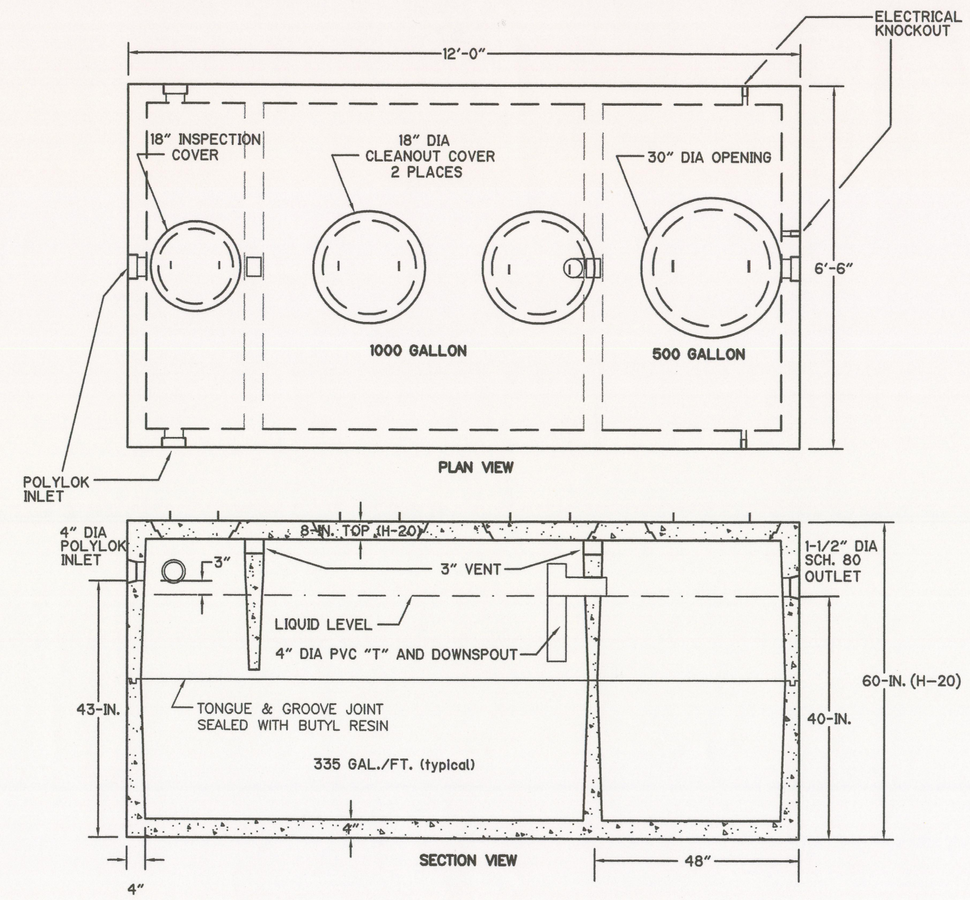

PUMP/SEPTIC TANK COMBO DETAIL 3

NOT TO SCALE

NOTES:

1. DIMENSIONS AND DETAILS ARE APPROXIMATE AND WERE OBTAINED FROM ROUGH FIELD MEASUREMENTS TO CONVEY THE GENERAL INTENT OF THE WORK.
2. THIS PLAN DEPICTS THE FLOOR PLANS OF THE PROPOSED BUILDINGS AT THE SITE. THIS PLAN DOES NOT DEPICT THEIR LOCATION RELATIVE TO EACH OTHER. REFER TO THE APPROXIMATE SITE PLAN FOR ORIENTATION ON THE SITE.
3. ASPHALT PAVING TO CONSIST OF 2 - 1/4" BINDER COURSE, WITH A 1 - 1/4" TOP COURSE. BINDER COURSE SHALL CONSIST OF CRUSHED BASE COURSE TYPE "A", GRADE 6 AS DEFINED IN STANDARD SPECIFICATIONS FOR ROAD AND BRIDGE CONSTRUCTION (SSRBC) AS ADOPTED BY THE MONTANA DEPARTMENT OF TRANSPORTATION AND THE MONTANA TRANSPORTATION COMMISSION. TOP COURSE SHALL CONSIST OF CRUSHED TOP SURFACING TYPE "A", GRADE 5 AS DEFINED IN SSRBC. BITUMINOUS MATERIALS SHALL CONFORM TO SECTION 402 OF THE SSRBC.

ACCEPTED BY: _____
LINCOLN COUNTY BUILDING INSPECTOR

DATE: _____

PRELIMINARY - FOR REVIEW ONLY

REV. NO.	DATE	DRWN	CHKD	REMARKS
0	4/8/02	ADR	PB	NOT FOR CONSTRUCTION

DESIGNED BY: A. ROSCOE
DRAWN BY: A. ROSCOE
SHEET CHK'D BY: P. BOROWIEC
CROSS CHK'D BY: P. BOROWIEC
APPROVED BY: _____
DATE: APRIL 2002

U.S. DEPARTMENT OF TRANSPORTATION
RESEARCH AND SPECIAL PROGRAMS ADMINISTRATION
JOHN A. VOLPE NATIONAL TRANSPORTATION SYSTEMS CENTER
ENVIRONMENTAL ENGINEERING DIVISION, DTS-33
55 BROADWAY, KENDALL SQUARE
CAMBRIDGE, MASSACHUSETTS 02142

CONTRACTOR SUPPORT PROVIDED BY:
CDM Federal Programs Corporation
consulting engineering construction operations
ONE CAMBRIDGE PLACE
50 HAMPSHIRE STREET
CAMBRIDGE, MASSACHUSETTS 02139

EPA ASBESTOS REMOVAL PROJECT

LIBBY, MONTANA

FLOOR PLANS

MILLWORK WEST
LIBBY, MONTANA

PROJECT NO. 4000-34369
FILE NAME: FLRPLAN.DWG

SHEET NO.
A-1