Filename: Q:\CAM_HW\LIBBY\SFLPL001.DWG Xref's: [LIBBYBDR,] Plotted by: MACIASZCZYKZR Time: 5/2/02 4:38:02 PM

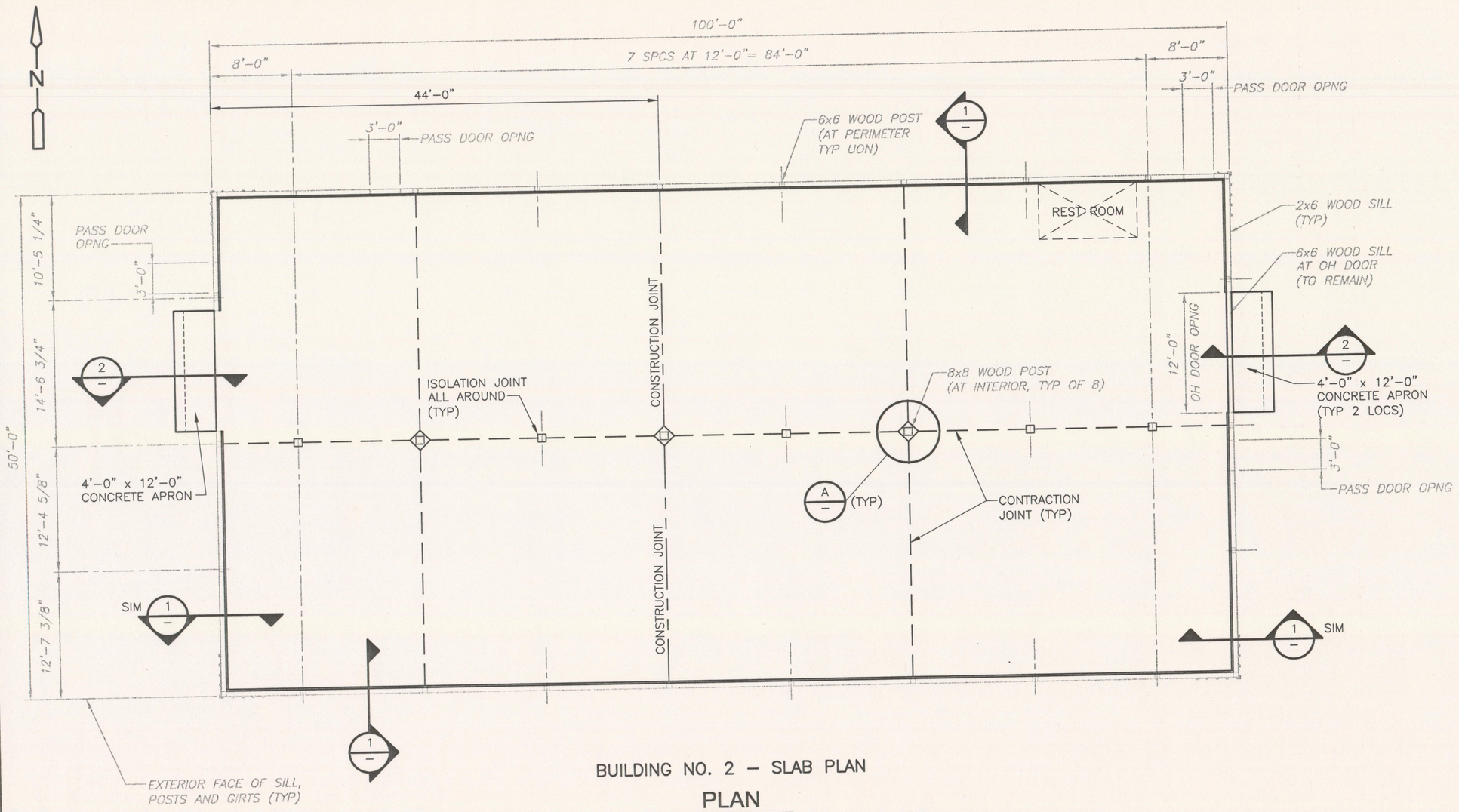

BUILDING NO. 2 – SLAB PLAN

PLAN

1/8" = 1'-0"

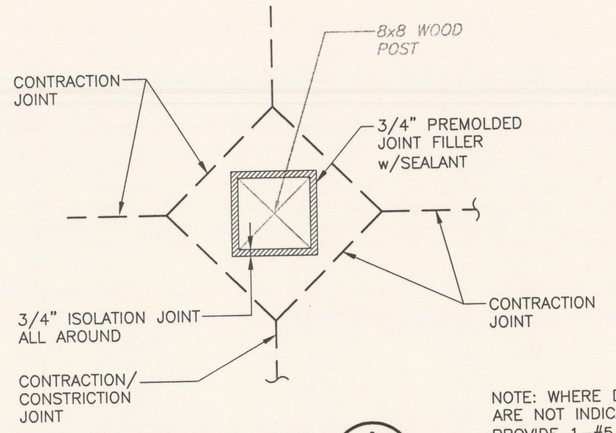

DETAIL A

1" = 1'-0"

NOTE: WHERE DIAGONAL JOINTS ARE NOT INDICATED ON PLAN, PROVIDE 1–#5 X 2'–0" LONG DIAGONAL BAR AT ISOLATION JOINT CORNERS

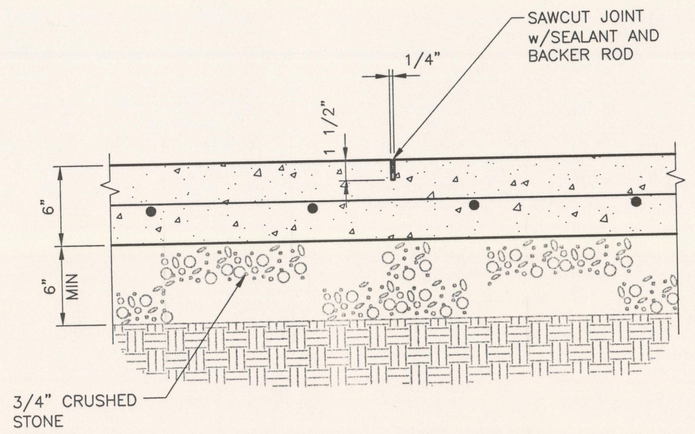

CONTRACTION JOINT

1 1/2" = 1'-0"

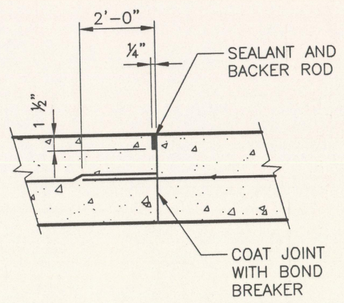

CONSTRUCTION JOINT

NTS

GENERAL NOTES:

1. ALL STRUCTURAL DRAWINGS SHALL BE USED IN CONJUNCTION WITH THE ARCHITECTURAL, MECHANICAL, ELECTRICAL, HEATING AND VENTILATING, SHOP DRAWINGS AND SPECIFICATIONS, AS APPROPRIATE.
2. SEE ARCHITECTURAL, MECHANICAL, HEATING AND VENTILATING AND ELECTRICAL DRAWINGS FOR REGLETS, PIPE SLEEVES, CONDUITS OR OTHER ITEMS TO BE EMBEDDED OR PASSED THROUGH THE CONCRETE.
3. SLANTED TEXT AND SHADED LINEWORK INDICATE INFORMATION DETERMINED IN THE FIELD. VERIFY ALL SUCH INFORMATION IN THE FIELD PRIOR TO FABRICATION AND INSTALLATION.

CAST IN PLACE CONCRETE NOTES:

1. REINFORCED CONCRETE SHALL COMPLY WITH ACI 318.
2. MINIMUM CONCRETE STRENGTH AT 28 DAYS:

   STRUCTURAL CONCRETE f'c = 4000 psi
3. REINFORCING STEEL SHALL BE NEW BILLET STEEL CONFORMING TO ASTM SPECIFICATION A615 GRADE 60.
4. REINFORCING STEEL FABRICATION SHALL BE IN COMPLIANCE WITH THE CRSI MANUAL OF STANDARD PRACTICE.
5. REINFORCING STEEL SHALL HAVE THE FOLLOWING MINIMUM CLEAR CONCRETE COVER UNLESS OTHERWISE NOTED:

   CONCRETE CAST AGAINST AND PERMANENTLY EXPOSED TO EARTH: 3 IN.

   CONCRETE SURFACES IN CONTACT WITH SOIL, WATER, OR EXPOSED TO WEATHER: 2 IN.

   CONCRETE SURFACES NOT IN CONTACT WITH SOIL, WATER OR EXPOSED TO WEATHER: TOP OF SLABS: 1 IN.
6. SPLICED BARS SHALL HAVE A MINIMUM LAP OF CLASS B TENSION LAP SPLICE UNLESS OTHERWISE NOTED.
7. CONSTRUCTION JOINTS SHALL NOT BE PLACED AT LOCATIONS OTHER THAN THOSE SHOWN ON THE DRAWINGS WITHOUT THE PRIOR WRITTEN APPROVAL OF THE CO/COTR.
8. ALL EXPOSED CORNERS OF CONCRETE TO HAVE 3/4" MINIMUM CHAMFER UNLESS OTHERWISE NOTED.
9. REINFORCING BARS TO EXTEND 12 BAR DIAMETERS BUT NOT LESS THAN 12" BEYOND BEND UNLESS OTHERWISE NOTED.
10. A MINIMUM OF 6" OF EXISTING STONE SHALL BE PRESENT BELOW ALL AREAS TO RECEIVE REINFORCED CONCRETE. CONTRACTOR SHALL CHECK DEPTH OF EXISTING STONE FOR COMPLIANCE WITH THIS REQUIREMENT. WHERE ADDITIONAL STONE IS REQUIRED, EXISTING STONE SHALL BE REMOVED, STOCKPILED AND REPLACED TO ALLOW CONTRACTOR TO CAREFULLY REMOVE SOIL TO THE DEPTHS REQUIRED. EXISTING STONE SHALL THEN BE REINSTALLED TO THE MINIMUM 6" DEPTH.
11. ALL STONE SHALL BE COMPACTED WITH 4 PASSES OF A WALK–BEHIND VIBRATORY COMPACTOR PRIOR TO PLACEMENT OF REINFORCING STEEL, 2x6's AND CONCRETE.

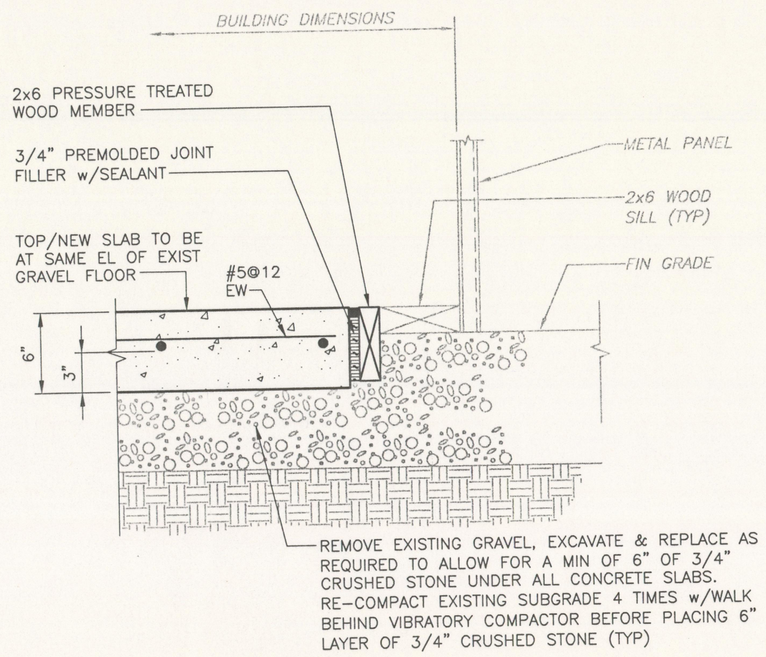

SECTION 1

1 1/2" = 1'-0"

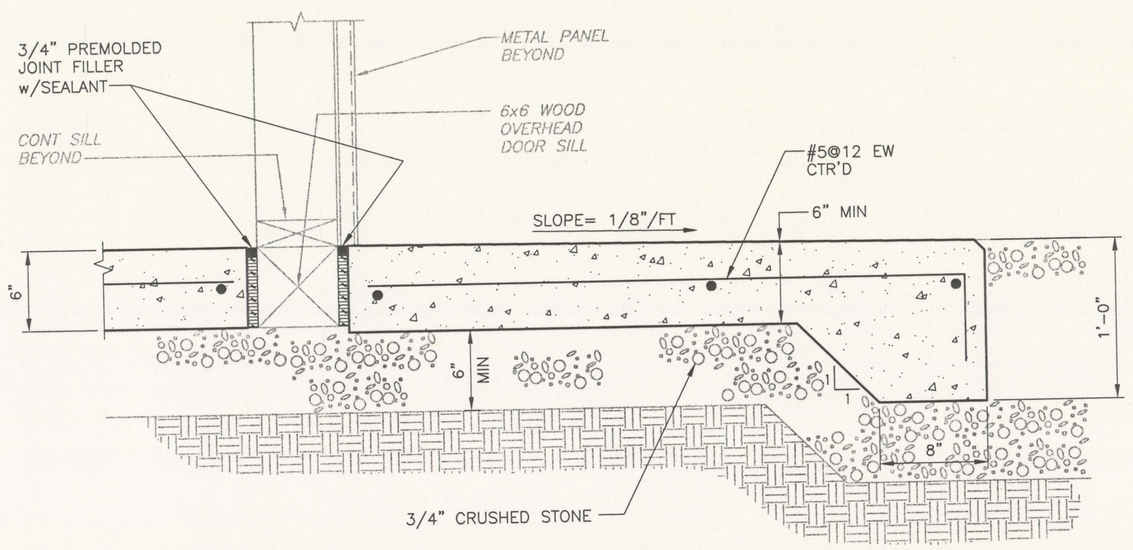

SECTION 2

1 1/2" = 1'-0"

PRELIMINARY – FOR REVIEW ONLY

1 1/2" = 1'- 0" .5 0 .5 1 | 1" = 1'- 0" .5 0 1 | 1/8" = 1'- 0" 4 2 0 4 8

REV. NO.	DATE	DRWN	CHK'D	REMARKS
0	5/3/02	WM	KRK	FOR REVIEW ONLY – NOT FOR CONSTRUCTION

DESIGNED BY: K. KRAWIEC
DRAWN BY: W. MICHAJLIW
SHEET CHK'D BY: K. KRAWIE
CROSS CHK'D BY: P. BOROWIEC
APPROVED BY:
DATE:

U.S. DEPARTMENT OF TRANSPORTATION
RESEARCH AND SPECIAL PROGRAMS ADMINISTRATION
JOHN A. VOLPE NATIONAL TRANSPORTATION SYSTEMS CENTER
ENVIRONMENTAL ENGINEERING DIVISION, DTS–33
55 BROADWAY, KENDALL SQUARE
CAMBRIDGE, MASSACHUSETTS 02142

CONTRACTOR SUPPORT PROVIDED BY:
CDM Federal Programs Corporation
a Subsidiary of Camp Dresser & McKee Inc.
consulting engineering construction operations
ONE CAMBRIDGE PLACE
50 HAMPSHIRE STREET
CAMBRIDGE, MASSACHUSETTS 02139

EPA ASBESTOS REMOVAL PROJECT

LIBBY, MONTANA

BUILDING NO. 2
NEW SLAB PLAN, SECTIONS, DETAILS & NOTES

PROJECT NO. 32373
FILE NAME: SFLPL001

SHEET NO.
S-1