CleanHarbors
ENVIRONMENTAL SERVICES, INC.
1200 CROWN COLONY DRIVE, P.O. BOX 9137 • QUINCY, MA 02269-9137
(617) 849-1800

Certified Mail - Return Receipt Requested Z 434 063 237

May 1, 1995

US EPA RECORDS CENTER REGION 5
1000492

Operations Branch (7404)
U.S. Environmental Protection Agency
401 M Street, SW
Washington, DC 20460

Re: Clean Harbors of Chicago, Inc.
EPA ID No. ILD000608471
Notification of PCB Activity

Dear Sir or Madam:

Clean Harbors of Chicago, Inc. (CHCI) is pleased to submit the enclosed Notification of PCB Activities, EPA Form 7710-53 (9-89), for generator and PCB commercial storage activities at CHCI's RCRA Part B hazardous waste facility located at 11800 South Stony Island Avenue in Chicago, IL.

If you have any questions regarding this notification, please do not hesitate to contact me at (617) 849-1800, extension 4473.

Sincerely,

Paul A. Ahearn

Paul A. Ahearn
Manager, Regulatory Compliance

Enclosure

cc: Anton Martig, EPA Region V (Cert. Mail Z 434 063 238)
James Laubsted, CHCI

EPA

United States Environmental Protection Agency
Washington, DC 20460

Notification of PCB Activity

Form Approved
OMB No. xxxx-xxxx
Approval expires xx-xx-xx

No information on this form may be claimed as TSCA CBI.

Return To:
OPERATIONS BRANCH (7404)
~~Chemical Regulation Branch~~
~~Office of Toxic Substances TS-799~~
U.S. Environmental Protection Agency
401 M St., SW
Washington, DC 20460

For Official Use Only
TSCA PCB ID Number

I. Name of Facility: Clean Harbors of Chicago, Inc.

Name of Owner of Facility: Clean Harbors of Chicago, Inc.

II. EPA Identification Number (if already assigned under RCRA): ILD 000608471

III. Facility Mailing Address (Street or PO Box, City, State, & ZIP Code):
11800 South Stony Island Avenue
Chicago, IL 60617

IV. Location of Facility (No. & Street, City, State, & ZIP Code):
11800 South Stony Island Avenue
Chicago, IL 60617

V. Installation Contact (Name and Title):
James Laubsted
Sr. Facility Compliance Manager

Telephone Number (Area Code and Number): 312-646-6202

VI. Type of PCB Activity (Mark 'X' in appropriate box. See instructions.)

- [X] A. Generator with onsite storage facility
- [X] B. Storer (Commercial)
- [ ] C. Transporter
- [ ] D. Permitted Discoser

VII. Certification

Under civil and criminal penalties of law for the making or submission of false or fraudulent statements or representations (18 U.S.C. 1001 and 15 U.S.C. 2615), I certify that the information contained in or accompanying this document is true, accurate, and complete. As to the identified section(s) of this document for which I cannot personally verify truth and accuracy, I certify as the company official having supervisory responsibility for the persons who, acting under my direct instructions, made the verification that this information is true, accurate, and complete.

Signature	Name and Official Title (Type or print)	Date Signed
J. McNally	Joseph McNally, Vice President	04/26/95

Paperwork Reduction Act Notice

The public reporting burden for this collection of information is estimated to average 1.5 hours per response. This estimate includes time for reviewing instructions, searching existing data sources, gathering and maintaining the needed data, and completing and reviewing the collection of information. Send comments regarding the burden estimate or any other aspect of this collection of information to the Chief, Information Policy Branch (PM-223), US Environmental Protection Agency, 401 M Street, SW, Washington, DC 20460, and to the Office of Information and Regulatory Affairs, Office of Management and Budget, Washington, DC 20503, marked ATTENTION: Desk Officer for EPA.

Item-by-Item Instructions for Completing EPA Form 7710-53

Return completed form to:

Chemical Regulation Branch
Office of Toxic Substances
TS-798
U.S. Environmental Protection Agency
401 M St., SW
Washington, DC 20460

No information on the form may be claimed confidential.

Type or print in black ink all items, except Item VII, "Certification". If you must use additional sheets, indicate clearly the number of the item on the form to which the information on the separate sheet applies. In the area marked "For Official Use Only" enter the name of the owner of the facility in the box provided.

Item I - Name of facility: Enter name of the facility.

Item II - EPA identification number (if already assigned under RCRA): Enter the identification number the facility was assigned under the RCRA hazardous waste notification regulations. If no identification number has been assigned, leave this space blank.

Items III and IV - Facility mailing address and location: Complete Items III and IV. Please note that the address you give in Item IV, "Location of Facility", must be a physical address, not a post office box or route number. If the mailing address and physical location are the same, you may enter "Same" i Item IV. If the facility is a mobile facility, you may enter "mobile" in Item IV, and provide the mailing address for the installation contact in Item III.

Item V - Installation contact: Enter the name, title, and business telephone number of the person who should be contacted regarding information submitted on this form.

Item VI - Type of PCB activity: Mark the appropriate box(es) to show which PCB activities are taking place at this facility.

A. Generator with onsite storage facility: You are a generator with an onsite storage facility under this notification requirement if you are a user, owner, or processor of PCBs or PCB items and you maintain your own storage facilities subject to 40 CFR 761.65(b) or (c)(7) for PCBs. If you are a generator with an onsite storage facility, mark an "X" in this box.

B. Commercial storer: You are a commercial storer if you own or operate a storage facility which is subject to the storage facility standards of 40 CFR 761.65(b) or (c)(7), and which engages in offsite storage activities involving the PCB waste generated by others. Most commercial storers of PCB waste perform waste storage services in exchange for a fee or other compensation, but the receipt of compensation is not necessary for your storage facility to qualify as a commercial storer of PCB wastes under this notification requirement. It is sufficient that your facility stores PCB wastes generated by others. See definition of commercial storer in 40 CFR 761.3. If you are a commercial storer, mark an "X" in this box.

C. Transporter: If you move PCBs by air, rail, highway, or water, then mark an "X" in this box.

D. Permitted disposer: If you currently hold a valid EPA permit to dispose of PCBs in concentrations exceeding 50 ppm in a landfill, through alternative technology or incineration, mark an "X" in this box.

Item VII - Certification: This certification must be signed by the owner, operator, or an authorized representative of the facility. An "authorized representative" is a person responsible for the overall operation of the facility (i.e., a plant manager or superintendent, or a person of equal responsibility). All notifications must include this certification to be complete.

CleanHarbors
ENVIRONMENTAL SERVICES, INC.
1200 CROWN COLONY DRIVE. P.O. BOX 9137 • QUINCY. MA 02269-9137
(617) 849-1800

Via Fascimile

June 28, 1994

Mr. William Childs
Illinois Environmental Protection Agency
Division of Land Pollution Control -- #24
Permit Section
2200 Churchill Road
Post Office Box 19276
Springfield, IL 62794-9276

Re: Clean Harbors/CWM Proposed Acquisition

Dear Mr. Childs:

As you know, Clean Harbors of Chicago, Inc. (CHCI) is continuing negotiations with CWM Chemical Services Inc. (CWMCSI) concerning a proposed acquisition of the CWMCSI hazardous waste management facility in Chicago, Illinois. Over the past few months, representatives from Clean Harbors have had meetings with you or other members of your staff, and at this time, three significant regulatory issues which have a direct bearing on Clean Harbors' decision to proceed with the negotiations remain unresolved. This letter is intended to summarize the issues in advance of our meeting scheduled for June 29, 1994.

Class 2 Modification

In my letter to the Agency dated June 10, 1994, CHCI outlined its plan for modifying the existing CHCI RCRA Part B license for authorization to upgrade and use selected non-incinerator structures/units at CWMCSI. In preparing that plan, CHCI was careful to limit the extent of any changes to those which would: 1) incorporate all applicable upgrades imposed on the CWMCSI assets by the HazOp and Phase II Fire Protection studies; 2) fulfill the Company's business needs and provide a build-out of the key activities already approved under the CHCI Part B license; and 3) fall within a well-defined (i.e., Class 2) Agency review and approval timeframe.

In that letter, CHCI described nine (9) hazardous waste management activities currently authorized under the existing CHCI Part B permit, identified the modification(s) which will be necessary to implement those activities using CWMCSI assets, and evaluated each proposed modification against the RCRA permit modification classification criteria in 35 IAC 703, Appendix A. The evaluation concluded that the proposed modifications are Class 1, Class 1* requiring prior Agency approval, or Class 2 modifications.

At a meeting last week between CHCI and the Agency, Doug Clay and Rob Watson of your staff informed Clean Harbors of the Agency's position that CHCI's proposed modifications should be handled under the Class 3 review process. Mr. Clay explained that Agency based its position on the fact that the CWMCSI facility has historically been the object of intense public interest due to its operating history, and that only the Class 3 process provided a formal public hearing opportunity to inform interested members of the public of the plan for the site.

From a regulatory/technical perspective, CHCI does not agree that any of the proposed changes (individually or as a group) warrant a Class 3 review. In fact, Mr. Clay and Mr. Watson agreed that the modifications sought by CHCI do, for the most part, meet the Class 1 or Class 2 criteria. CHCI notes that all of the hazardous waste management units/activities proposed to be conducted on the CWMCSI property are already approved as part of the CHCI Part B license which was granted in November 1993 after public hearing and review/comment. Since the same design and operation standards already reviewed and approved by the Agency for the proposed CHCI units will be incorporated into the proposed CWMCSI units, the level of Agency review should be minimal, and a Class 1 or 2 process is sufficient.

Clean Harbors is willing to conduct one or more public meetings within the Class 2 procedures to ensure that the public is fully informed of the plans for the CWMCSI site. Applicable comment period is also provided within the Class 2 process. We believe that the 60-day public comment period and a public meeting, or a series of public meeting before and/or during the modification process, will provide the public with ample opportunity to comment and with the information to fully understand the proposal for the site.

Temporary Authorization to Construct

Throughout prior meetings with the Agency, CHCI has discussed the need to begin construction activities at the earliest possible time. The Class 2 regulations allow for construction activities beginning 60 days after submission of a Class 2 request [see 35 IAC 703.282(h)]. Notwithstanding this, CHCI requests the issuance of a temporary authorization in accordance with 35 IAC 703.280(e) provisions. Since the proposed modifications will enhance the protection of human health and the environment by significantly upgrading the level of fire protection and secondary containment at the site, and since the acquisition of the CWMCSI assets by CHCI will result in the final closure of the incinerator and outdoor storage areas, CHCI believes that the criteria in Section 703.280(e)(3)(B) are met and that a temporary authorization is justified.

Schedule

As noted in the June 10th letter, the "time to market", i.e., the speed in which the CWMCSI assets can be brought on-line as revenue generating units for CHCI, is the single most critical factor with respect to the viability of this proposed acquisition. In light of the current economics of the hazardous waste industry, Clean Harbors' "time to market" for the CWMCSI assets is no later than the end of 1994.

To achieve the goal of bringing the CWMCSI assets on-line by the end of 1994, Clean Harbors has agreed to make, without further review or negotiation, all applicable HazOp/Fire Protection upgrades previously recommended by the Agency. In addition, Clean Harbors has limited all other changes (e.g., modification of tank farm and secondary containment structure) to the type and scope which CHCI believes to be covered by Class 1, 1*, or 2 criteria and within the Class 2 approval timeframe of 120 days or less. CHCI must receive a firm commitment from the Agency that the requested modifications will be reviewed under a Class 1 or Class 2 system, or we will be unable to proceed with the project.

CHCI anticipates having a complete permit modification and temporary authorization request package to the Agency by the middle of July 1994. By our current estimate, construction activities would have to begin no later than August 15, 1994 in order to complete necessary concrete/sealant work by November 1, 1994. CHCI requests that a temporary authorization to construct be issued within two weeks of the request, so that the construction may proceed without delay on or before August 15.

In conclusion, the proposed transaction between CHCI and CWMCSI will achieve significant and multiple benefits for the people of Illinois. Most notably, the incinerator will be permanently removed from the site, and additional health and safety measures will be installed at the site in accordance with the wishes of the community and the directives of the Agency and the Attorney General.

Clean Harbors appreciates the Agency's time and assistance in this matter. Jon Black, Bill Geary and I look forward to meeting with you and discussing these issues tomorrow at 1:30 P.M. If you have any questions, please do not hesitate to contact me at (617) 849-1800, extension 4473.

Sincerely,

Paul A. Ahearn

Paul A. Ahearn
Manager, Regulatory Compliance

cc: Stephen Pozner, V.P., Compliance and Health & Safety, CHESI

bcc: Jon Black
Bill Geary

A-453

U.S.EPA

RECEIVED

JAN 23 1992

OFFICE OF RCRA
Waste Management Division
U.S. EPA, REGION V

CleanHarbors
ENVIRONMENTAL SERVICES COMPANIES
1200 CROWN COLONY DRIVE
P.O. BOX 9137
QUINCY, MA 02269
(617) 849-1800

Certified Mail - Return Receipt Requested

RECEIVED
JAN 21 1992
IEPA-DLPC

January 14, 1992

Mr. Mark A. Schollenberger, P.E.
Illinois Environmental Protection Agency
Division of Land Pollution Control -- #24
Permit Section
2200 Churchill Road
P.O. Box 19276
Springfield, IL 62794-9276

Re: Clean Harbors of Chicago, Inc. - Waste Compactor
11800 South Stony Island Avenue
Chicago, IL 60617

Dear Mr. Schollenberger:

Pursuant to Illinois EPA Hazardous Waste Regulations, Section 703.155(c), Clean Harbors is providing a revised Part A permit application and an explanation justifying the need for the utilization of a waste compactor.

If you have any questions, please do not hesitate to contact me at 617-849-1800, extension 4309.

Sincerely,

Stephen Pozner

Stephen Pozner
Director of Corporate Compliance

Attachment

cc: James Laubsted, CHCI

Maywood

PART A LOG: A453 SITE NO. : 0316000031

NAME : CLEAN HARBORS OF CHICAGO, INC USEPA ILD : ILD000608471

CITY : CHICAGO COUNTY : COOK

TYPE (LN,NW,PC SO,SO,PE,OT) : REVIEWER :

DATE REC'D : 92/01/21 DATE MAILED: AFF/DEN/FE:
CR/PARTA: NOTIFY FOS: Y

PROCESS1:	AMOUNT 1:	UNIT 1:	ADD/DEL 1:
PROCESS2:	AMOUNT 2:	UNIT 2:	ADD/DEL 2:
PROCESS3:	AMOUNT 3:	UNIT 3:	ADD/DEL 3:
PROCESS4:	AMOUNT 4:	UNIT 4:	ADD/DEL 4:
PROCESS5:	AMOUNT 5:	UNIT 5:	ADD/DEL 5:
PROCESS6:	AMOUNT 6:	UNIT 6:	ADD/DEL 6:

COMMENTS :

Revised Part A Permit Application

RECEIVED
JAN 21 1992
IEPA-DLPC

Please print or type with ELITE type (12 characters per inch) in the unshaded areas only

Form Approved. OMB No. 2050-0034 Expires 12-3
GSA No. 0246-EP

[redacted]

(Read the Instructions before starting)

[redacted]

A. EPA ID Number	B. Secondary ID Number (If applicable)
I L D 0 0 0 6 0 8 4 7 1	

II. Name of Facility

C L E A N H A R B O R S O F C H I C A G O I N C

III. Facility Location (Physical address not P.O. Box or Route Number)

A. Street

1 1 8 0 0 S O U T H S T O N Y I S L A N D A V E

Street (continued)

City or Town	State	ZIP Code
C H I C A G O	I L	6 0 6 1 7 -

County Code (If known)	County Name
	C O O K

B. Land Type	C. Geographic Location		D. Facility Existence Date
(enter code)	LATITUDE (degrees, minutes, & seconds)	LONGITUDE (degrees, minutes, & seconds)	Month Day Year
S	4 1 4 0 4 4	8 7 3 4 4 6	0 7 2 9 1 9 8

IV. Facility Mailing Address

Street or P.O. Box

S A M E

City or Town	State	ZIP Code
		-

V. Facility Contact (Person to be contacted regarding waste activities at facility)

Name (last)	(first)
L A U B S T E D	J A M E S

Job Title	Phone Number (area code and number)
C O M P L I A N C E M G R	3 1 2 - 6 4 6 - 6 2 0 2

VI. Facility Contact Address (See instructions)

Contact Address: Location	Mailing	B. Street or P.O. Box
X		

City or Town	State	ZIP Code

RECEIVED
JAN 21 1992
IEPA-DLPC

Please print or type with ELITE type (12 characters per inch) in the unshaded areas only.

Form Approved. OMB No. 2050-0034 Expires 12-31-92
GSA No. 0246-EPA-GDP

EPA I.D. Number (enter from page 1)	Secondary ID Number (enter from page 1)
I L D 0 0 0 6 0 8 4 7 1	

XIV. Description of Hazardous Wastes (continued)

Line Number	A. EPA HAZARDOUS WASTE NO. (enter code)	B. ESTIMATED ANNUAL QUANTITY OF WASTE	C. UNIT OF MEASURE (enter code)	D. PROCESSES (1) PROCESS CODES (enter)	D. PROCESSES (2) PROCESS DESCRIPTION (If a code is not entered in D(1))
1	D027	10,000	T	S01 S02 000	
2	D028	10,000	T	S01 S02 000	
3	D029	10,000	T	S01 S02 000	
4	D030	10,000	T	S01 S02 000	
5	D031	10,000	T	S01 S02 000	
6	D032	10,000	T	S01 S02 000	
7	D033	10,000	T	S01 S02 000	
8	D034	10,000	T	S01 S02 000	
9	D035	10,000	T	S01 S02 000	
10	D036	10,000	T	S01 S02 000	
11	D037	10,000	T	S01 S02 000	
12	D038	10,000	T	S01 S02 000	
13	D039	10,000	T	S01 S02 000	
14	D040	10,000	T	S01 S02 000	
15	D041	10,000	T	S01 S02 000	
16	D042	10,000	T	S01 S02 000	
17	D043	10,000	T	S01 S02 000	
18	F001	10,000	T	S01 S02 000	
19	F002	10,000	T	S01 S02 000	
20	F003	10,000	T	S01 S02 000	
21	F004	10,000	T	S01 S02 000	
22	F005	10,000	T	S01 S02 000	
23	F006	10,000	T	S01 S02 000	
24	F007	10,000	T	S01 S02 000	
25	F008	10,000	T	S01 S02 000	
26	F009	10,000	T	S01 S02 000	
27	F010	10,000	T	S01 S02 000	
28	F011	10,000	T	S01 S02 000	
29	F012	10,000	T	S01 S02 000	
30	F019	10,000	T	S01 S02 000	
31	F039	10,000	T	S01 S02 000	
32	K002	10,000	T	S01 S02 000	
33	K003	10,000	T	S01 S02 000	

Please print or type with ELITE type (12 characters per inch) in the unshaded areas only

Form Approved. OMB No. 2050-0034 Expires 12-31-91
GSA No. 0246-EPA-OT

EPA I.D. Number (enter from page 1)												Secondary ID Number (enter from page 1)
I	L	D	0	0	0	6	0	8	4	7	1	

XIV. Description of Hazardous Wastes (continued)

Line Number	A. EPA Hazardous Waste No. (enter code)	B. Estimated Annual Quantity of Waste	C. Unit of Measure (enter code)	D. Processes (1) Process Codes (enter)	D. Processes (2) Process Description (If a code is not entered in D(1))
1	K004	10,000	T	S01 S02 000	
2	K005	10,000	T	S01 S02 000	
3	K006	10,000	T	S01 S02 000	
4	K007	10,000	T	S01 S02 000	
5	K008	10,000	T	S01 S02 000	
6	K046	10,000	T	S01 S02 000	
7	K052	10,000	T	S01 S02 000	
8	K060	10,000	T	S01 S02 000	
9	K061	10,000	T	S01 S02 000	
10	K062	10,000	T	S01 S02 000	
11	K069	10,000	T	S01 S02 000	
12	K086	10,000	T	S01 S02 000	
13	K087	10,000	T	S01 S02 000	
14	K100	10,000	T	S01 S02 000	Cl - Included with above
15	D002	10,000	T	S01 S02 000	
16	D003	10,000	T	S01 S02 000	
17	D004	10,000	T	S01 S02 000	
18	D005	10,000	T	S01 S02 000	
19	D006	10,000	T	S01 S02 000	
20	D007	10,000	T	S01 S02 000	
21	D008	10,000	T	S01 S02 000	
22	D009	10,000	T	S01 S02 000	
23	D010	10,000	T	S01 S02 000	
24	D011	10,000	T	S01 S02 000	
25	D012	10,000	T	S01 S02 000	
26	D013	10,000	T	S01 S02 000	
27	D014	10,000	T	S01 S02 000	
28	D015	10,000	T	S01 S02 000	
29	D016	10,000	T	S01 S02 000	
30	D017	10,000	T	S01 S02 000	
31	D018	10,000	T	S01 S02 000	
32	D019	10,000	T	S01 S02 000	
33	D020	10,000	T	S01 S02 000	

Please print or type with ELITE type (12 characters per inch) in the unshaded areas only.

Approved. OMB No. 2050-0024 Expires 12-31-91
OCA No. 0246-EPA-OT

EPA I.D. Number (enter from page 1)	Secondary ID Number (enter from page 1)
I L D 0 0 0 6 0 8 4 7 1	

XIV. Description of Hazardous Wastes (continued)

Line Number	A. EPA HAZARDOUS WASTE NO. (enter code)	B. ESTIMATED ANNUAL QUANTITY OF WASTE	C. UNIT OF MEASURE (enter code)	D. PROCESSES (1) PROCESS CODES (enter)			D. PROCESSES (2) PROCESS DESCRIPTION (if a code is not entered in D(1))
1	D 0 2 1	10,000	T	S 0 1	S 0 2	0 0 0	
2	D 0 2 2	10,000	T	S 0 1	S 0 2	0 0 0	
3	D 0 2 3	10,000	T	S 0 1	S 0 2	0 0 0	
4	D 0 2 4	10,000	T	S 0 1	S 0 2	0 0 0	
5	D 0 2 5	10,000	T	S 0 1	S 0 2	0 0 0	
6	D 0 2 6	10,000	T	S 0 1	S 0 2	0 0 0	
7	D 0 2 7	10,000	T	S 0 1	S 0 2	0 0 0	
8	D 0 2 8	10,000	T	S 0 1	S 0 2	0 0 0	
9	D 0 2 9	10,000	T	S 0 1	S 0 2	0 0 0	
10	D 0 3 0	10,000	T	S 0 1	S 0 2	0 0 0	
11	D 0 3 1	10,000	T	S 0 1	S 0 2	0 0 0	
12	D 0 3 2	10,000	T	S 0 1	S 0 2	0 0 0	
13	D 0 3 3	10,000	T	S 0 1	S 0 2	0 0 0	
14	D 0 3 4	10,000	T	S 0 1	S 0 2	0 0 0	
15	D 0 3 5	10,000	T	S 0 1	S 0 2	0 0 0	
16	D 0 3 6	10,000	T	S 0 1	S 0 2	0 0 0	
17	D 0 3 7	10,000	T	S 0 1	S 0 2	0 0 0	
18	D 0 3 8	10,000	T	S 0 1	S 0 2	0 0 0	
19	D 0 3 9	10,000	T	S 0 1	S 0 2	0 0 0	
20	D 0 4 0	10,000	T	S 0 1	S 0 2	0 0 0	
21	D 0 4 1	10,000	T	S 0 1	S 0 2	0 0 0	
22	D 0 4 2	10,000	T	S 0 1	S 0 2	0 0 0	
23	D 0 4 3	10,000	T	S 0 1	S 0 2	0 0 0	
24	K 0 6 2	10,000	T	S 0 1	S 0 2	0 0 0	D1 - Included with above
25	D 0 0 2	10,000	T	S 0 1	T 0 4		
26	D 0 0 3	10,000	T	S 0 1	T 0 4		
27	D 0 0 4	10,000	T	S 0 1	T 0 4		
28	D 0 0 5	10,000	T	S 0 1	T 0 4		
29	D 0 0 6	10,000	T	S 0 1	T 0 4		
30	D 0 0 7	10,000	T	S 0 1	T 0 4		
31	D 0 0 8	10,000	T	S 0 1	T 0 4		
32	D 0 0 9	10,000	T	S 0 1	T 0 4		
33	D 0 1 0	10,000	T	S 0 1	T 0 4		

Please print or type with ELITE type (12 characters per inch) in the unshaded areas only

Form Approved. OMB No. 2050-0034 Expires 12-31-91
GSA No. 0246-EPA-OT

EPA I.D. Number (enter from page 1): I L D 0 0 0 6 0 8 4 7 1

Secondary ID Number (enter from page 1):

XIV. Description of Hazardous Wastes (continued)

Line Number	A. EPA Hazardous Waste No. (enter code)	B. Estimated Annual Quantity of Waste	C. Unit of Measure (enter code)	D. Processes (1) Process Codes (enter)			D. (2) Process Description (If a code is not entered in D(1))
1	D011	10,000	T	S01	T04		
2	D012	10,000	T	S01	T04		
3	D013	10,000	T	S01	T04		
4	D014	10,000	T	S01	T04		
5	D015	10,000	T	S01	T04		
6	D016	10,000	T	S01	T04		
7	D017	10,000	T	S01	T04		
8	D018	10,000	T	S01	T04		
9	D019	10,000	T	S01	T04		
10	D020	10,000	T	S01	T04		
11	D021	10,000	T	S01	T04		
12	D022	10,000	T	S01	T04		
13	D023	10,000	T	S01	T04		
14	D024	10,000	T	S01	T04		
15	D025	10,000	T	S01	T04		
16	D026	10,000	T	S01	T04		
17	D027	10,000	T	S01	T04		
18	D028	10,000	T	S01	T04		
19	D029	10,000	T	S01	T04		
20	D030	10,000	T	S01	T04		
21	D031	10,000	T	S01	T04		
22	D032	10,000	T	S01	T04		
23	D033	10,000	T	S01	T04		
24	D034	10,000	T	S01	T04		
25	D035	10,000	T	S01	T04		
26	D036	10,000	T	S01	T04		
27	D037	10,000	T	S01	T04		
28	D038	10,000	T	S01	T04		
29	D039	10,000	T	S01	T04		
30	D040	10,000	T	S01	T04		
31	D041	10,000	T	S01	T04		
32	D042	10,000	T	S01	T04		
33	D043	10,000	T	S01	T04		

Please print or type with ELITE type (12 characters per inch) in the unshaded areas only

Form Approved. OMB No. 2050-0034 Expires 12-31-91
GSA No. 0246-EPA-OT

I	L	D	0	0	0	6	0	8	4	7	1							

	K	0	6	2	10,000	T	S	0	1	T	0	4						E1 - Included with above

Please print or type with ELITE type (12 characters per inch) in the unshaded areas only

Approved. OMB No. 2050-0034 Expires 12-31-91
EPA No. 0246-EPA-OT

EPA I.D. Number (enter from page 1)	Secondary ID Number (enter from page 1)
I L D 0 0 0 6 0 8 4 7 1	

XIV. Description of Hazardous Wastes (continued)

Line Number	A. EPA HAZARDOUS WASTE NO. (enter code)	B. ESTIMATED ANNUAL QUANTITY OF WASTE	C. UNIT OF MEASURE (enter code)	D. PROCESSES (1) PROCESS CODES (enter)		(2) PROCESS DESCRIPTION (if a code is not entered in D(1))
1	D 0 0 1	86,000	T	S 0 1 S 0 2		
2	D 0 0 2	86,000	T	S 0 1 S 0 2		
3	D 0 0 3	86,000	T	S 0 1 S 0 2		
4	D 0 0 4	166,000	T	S 0 1 S 0 2		
5	D 0 0 5	166,000	T	S 0 1 S 0 2		
6	D 0 0 6	166,000	T	S 0 1 S 0 2		
7	D 0 0 7	166,000	T	S 0 1 S 0 2		
8	D 0 0 8	166,000	T	S 0 1 S 0 2		
9	D 0 0 9	166,000	T	S 0 1 S 0 2		
10	D 0 1 0	166,000	T	S 0 1 S 0 2		
11	D 0 1 1	166,000	T	S 0 1 S 0 2		
12	D 0 1 2	166,000	T	S 0 1 S 0 2		
13	D 0 1 3	5,000	T	S 0 1 S 0 2		
14	D 0 1 4	5,000	T	S 0 1 S 0 2		
15	D 0 1 5	5,000	T	S 0 1 S 0 2		
16	D 0 1 6	5,000	T	S 0 1 S 0 2		
17	D 0 1 7	5,000	T	S 0 1 S 0 2		
18	D 0 1 8	5,000	T	S 0 1 S 0 2		
19	D 0 1 9	86,000	T	S 0 1 S 0 2		
20	D 0 2 0	86,000	T	S 0 1 S 0 2		
21	D 0 2 1	86,000	T	S 0 1 S 0 2		
22	D 0 2 2	86,000	T	S 0 1 S 0 2		
23	D 0 2 3	86,000	T	S 0 1 S 0 2		
24	D 0 2 4	86,000	T	S 0 1 S 0 2		
25	D 0 2 5	86,000	T	S 0 1 S 0 2		
26	D 0 2 6	86,000	T	S 0 1 S 0 2		
27	D 0 2 7	86,000	T	S 0 1 S 0 2		
28	D 0 2 8	86,000	T	S 0 1 S 0 2		
29	D 0 2 9	86,000	T	S 0 1 S 0 2		
30	D 0 3 0	86,000	T	S 0 1 S 0 2		
31	D 0 3 1	86,000	T	S 0 1 S 0 2		
32	D 0 3 2	86,000	T	S 0 1 S 0 2		
33	D 0 3 3	86,000	T	S 0 1 S 0 2		

Please print or type with ELITE type [illegible] characters per inch in the unshaded areas only.

Form Approved. OMB No. 2050-0034 Expires 12-31-91
GSA No. 0246-EPA-OT

EPA I.D. Number (enter from page 1)	Secondary ID Number (enter from page 1)
I L D 0 0 0 6 0 8 4 7 1	

XIV. Description of Hazardous Wastes (continued)

Line Number	A. EPA Hazardous Waste No. (enter code)	B. Estimated Annual Quantity of Waste	C. Unit of Measure (enter code)	D. Processes (1) Process Codes (enter)	D. Processes (2) Process Description (if a code is not entered in D(1))
1	D 0 3 4	86,000	T	S 0 1 S 0 2	
2	D 0 3 5	86,000	T	S 0 1 S 0 2	
3	D 0 3 6	86,000	T	S 0 1 S 0 2	
4	D 0 3 7	86,000	T	S 0 1 S 0 2	
5	D 0 3 8	86,000	T	S 0 1 S 0 2	
6	D 0 3 9	86,000	T	S 0 1 S 0 2	
7	D 4 0	86,000	T	S 0 1 S 0 2	
8	D 0 4 1	86,000	T	S 0 1 S 0 2	
9	D 0 4 2	86,000	T	S 0 1 S 0 2	
10	D 0 4 3	86,000	T	S 0 1 S 0 2	
11	F 0 0 1	86,000	T	S 0 1 S 0 2	
12	F 0 0 2	86,000	T	S 0 1 S 0 2	
13	F 0 0 3	86,000	T	S 0 1 S 0 2	
14	F 0 0 4	86,000	T	S 0 1 S 0 2	
15	F 0 0 5	86,000	T	S 0 1 S 0 2	
16	F 0 0 6	86,000	T	S 0 1 S 0 2	
17	F 0 0 7	86,000	T	S 0 1 S 0 2	
18	F 0 0 8	86,000	T	S 0 1 S 0 2	
19	F 0 0 9	86,000	T	S 0 1 S 0 2	
20	F 0 1 0	86,000	T	S 0 1 S 0 2	
21	F 0 1 1	166,000	T	S 0 1 S 0 2	
22	F 0 1 2	86,000	T	S 0 1 S 0 2	
23	F 0 1 9	86,000	T	S 0 1 S 0 2	
24	F 0 2 0	86,000	T	S 0 1 S 0 2	
25	F 0 2 1	86,000	T	S 0 1 S 0 2	
26	F 0 2 2	86,000	T	S 0 1 S 0 2	
27	F 0 2 3	86,000	T	S 0 1 S 0 2	
28	F 0 2 4	86,000	T	S 0 1 S 0 2	
29	F 0 2 5	86,000	T	S 0 1 S 0 2	
30	F 0 2 6	86,000	T	S 0 1 S 0 2	
31	F 0 2 7	86,000	T	S 0 1 S 0 2	
32	F 0 2 8	86,000	T	S 0 1 S 0 2	
33	F 0 3 9	86,000	T	S 0 1 S 0 2	

Please print or type with ELITE type (12 characters per inch) in the unshaded areas only

Form Approved. OMB No. 2050-0034 Expires 12-31-91
EPA No. 0246-EPA-OT

EPA I.D. Number (enter from page 1): I L D 0 0 0 6 0 8 4 7 1

Secondary ID Number (enter from page 1):

XIV. Description of Hazardous Wastes (continued)

Line Number	A. EPA HAZARDOUS WASTE NO. (enter code)	B. ESTIMATED ANNUAL QUANTITY OF WASTE	C. UNIT OF MEASURE (enter code)	D. PROCESSES (1) PROCESS CODES (enter)	D. PROCESSES (2) PROCESS DESCRIPTION (If a code is not entered in D(1))
1	K001	5,700	T	S01 S02	
2	K002	5,700	T	S01 S02	
3	K003	5,700	T	S01 S02	
4	K004	5,700	T	S01 S02	
5	K005	5,700	T	S01 S02	
6	K006	5,700	T	S01 S02	
7	K007	5,700	T	S01 S02	
8	K008	5,700	T	S01 S02	
9	K009	5,700	T	S01 S02	
10	K010	5,700	T	S01 S02	
11	K011	5,700	T	S01 S02	
12	K013	5,700	T	S01 S02	
13	K014	5,700	T	S01 S02	
14	K015	5,700	T	S01 S02	
15	K016	5,700	T	S01 S02	
16	K017	5,700	T	S01 S02	
17	K018	5,700	T	S01 S02	
18	K019	5,700	T	S01 S02	
19	K020	5,700	T	S01 S02	
20	K021	5,700	T	S01 S02	
21	K022	5,700	T	S01 S02	
22	K023	5,700	T	S01 S02	
23	K024	5,700	T	S01 S02	
24	K025	5,700	T	S01 S02	
25	K026	5,700	T	S01 S02	
26	K027	5,700	T	S01 S02	
27	K028	5,700	T	S01 S02	
28	K029	5,700	T	S01 S02	
29	K030	5,700	T	S01 S02	
30	K031	5,700	T	S01 S02	
31	K032	5,700	T	S01 S02	
32	K033	5,700	T	S01 S02	
33	K034	5,700	T	S01 S02	

Please print or type with ELITE type (12 characters per inch) in the unshaded areas only

Form Approved. OMB No. 2050-0034 Expires 12-31-91
GSA No. 0246-EPA-OT

EPA I.D. Number (enter from page 1): I L D 0 0 0 6 0 8 4 7 1

Secondary ID Number (enter from page 1):

XIV. Description of Hazardous Wastes (continued)

Line Number	A. EPA HAZARDOUS WASTE NO. (enter code)	B. ESTIMATED ANNUAL QUANTITY OF WASTE	C. UNIT OF MEASURE (enter code)	D. PROCESSES (1) PROCESS CODES (enter)	D. PROCESSES (2) PROCESS DESCRIPTION (If a code is not entered in D(1))
01	K035	5,700	T	S01 S02	
02	K036	5,700	T	S01 S02	
03	K037	5,700	T	S01 S02	
04	K038	5,700	T	S01 S02	
05	K039	5,700	T	S01 S02	
06	K040	5,700	T	S01 S02	
07	K041	5,700	T	S01 S02	
08	K042	5,700	T	S01 S02	
09	K043	5,700	T	S01 S02	
10	K044	5,700	T	S01 S02	
11	K045	5,700	T	S01 S02	
12	K046	5,700	T	S01 S02	
13	K047	5,700	T	S01 S02	
14	K048	5,700	T	S01 S02	
15	K049	5,700	T	S01 S02	
16	K050	5,700	T	S01 S02	
17	K051	5,700	T	S01 S02	
18	K052	5,700	T	S01 S02	
19	K060	5,700	T	S01 S02	
20	K061	5,700	T	S01 S02	
21	K062	75,000	T	S01 S02	
22	K069	5,700	T	S01 S02	
23	K071	5,700	T	S01 S02	
24	K073	5,700	T	S01 S02	
25	K083	5,700	T	S01 S02	
26	K084	5,700	T	S01 S02	
27	K085	5,700	T	S01 S02	
28	K086	166,000	T	S01 S02	
29	K087	5,700	T	S01 S02	
30	K093	5,700	T	S01 S02	
31	K094	5,700	T	S01 S02	
32	K095	5,700	T	S01 S02	
33	K096	5,700	T	S01 S02	

Please print or type with ELITE type (12 characters per inch) in the unshaded areas only

Form Approved. OMB No. 2050-0034 Expires 12-31-91
GSA No. 0246-EPA-OT

EPA I.D. Number (enter from page 1)	Secondary ID Number (enter from page 1)
I L D 0 0 0 6 0 8 4 7 1	

XIV. Description of Hazardous Wastes (continued)

Line Number	A. EPA HAZARDOUS WASTE NO. (enter code)	B. ESTIMATED ANNUAL QUANTITY OF WASTE	C. UNIT OF MEASURE (enter code)	D. PROCESSES (1) PROCESS CODES (enter)	D. PROCESSES (2) PROCESS DESCRIPTION (If a code is not entered in D(1))
1	K097	5,700	T	S01 S02	
2	K098	5,700	T	S01 S02	
3	K099	5,700	T	S01 S02	
4	K100	5,700	T	S01 S02	
5	K101	5,700	T	S01 S02	
6	K102	5,700	T	S01 S02	
7	K103	5,700	T	S01 S02	
8	K104	5,700	T	S01 S02	
9	K105	5,700	T	S01 S02	
10	K106	5,700	T	S01 S02	
11	K111	5,700	T	S01 S02	
12	K112	5,700	T	S01 S02	
13	K113	5,700	T	S01 S02	
14	K114	5,700	T	S01 S02	
15	K115	5,700	T	S01 S02	
16	K116	5,700	T	S01 S02	
17	K117	5,700	T	S01 S02	
18	K118	5,700	T	S01 S02	
19	K123	5,700	T	S01 S02	
20	K124	5,700	T	S01 S02	
21	K125	5,700	T	S01 S02	
22	K126	5,700	T	S01 S02	
23	K136	5,700	T	S01 S02	
24	U001	69,000	T	S01 S02	
25	U002	69,000	T	S01 S02	
26	U003	69,000	T	S01 S02	
27	U004	69,000	T	S01 S02	
28	U005	5,000	T	S01 S02	
29	U006	69,000	T	S01 S02	
30	U007	69,000	T	S01 S02	
31	U008	69,000	T	S01 S02	
32	U009	69,000	T	S01 S02	
33	U010	5,000	T	S01 S02	

Please print or type with ELITE type (12 characters per inch) in the unshaded areas only

Approved OMB No. 2050-0034 Expires 08-31-91
EPA No. 0246-EPA-OT

EPA I.D. Number (enter from page 1): I L D 0 0 0 6 0 8 4 7 1

Secondary ID Number (enter from page 1):

XIV. Description of Hazardous Wastes (continued)

Line Number	A. EPA HAZARDOUS WASTE NO. (enter code)	B. ESTIMATED ANNUAL QUANTITY OF WASTE	C. UNIT OF MEASURE (enter code)	D. PROCESSES (1) PROCESS CODES (enter)	D. PROCESSES (2) PROCESS DESCRIPTION (If a code is not entered in D(1))
1	U 0 1 1	5,000	T	S 0 1 S 0 2	
2	U 0 1 2	69,000	T	S 0 1 S 0 2	
3	U 0 1 4	69,000	T	S 0 1 S 0 2	
4	U 0 1 5	69,000	T	S 0 1 S 0 2	
5	U 0 1 6	69,000	T	S 0 1 S 0 2	
6	U 0 1 7	5,000	T	S 0 1 S 0 2	
7	U 0 1 8	5,000	T	S 0 1 S 0 2	
8	U 0 1 9	69,000	T	S 0 1 S 0 2	
9	U 0 2 0	69,000	T	S 0 1 S 0 2	
10	U 0 2 1	69,000	T	S 0 1 S 0 2	
11	U 0 2 2	69,000	T	S 0 1 S 0 2	
12	U 0 2 3	69,000	T	S 0 1 S 0 2	
13	U 0 2 4	5,000	T	S 0 1 S 0 2	
14	U 0 2 5	5,000	T	S 0 1 S 0 2	
15	U 0 2 6	5,000	T	S 0 1 S 0 2	
16	U 0 2 7	5,000	T	S 0 1 S 0 2	
17	U 0 2 8	5,000	T	S 0 1 S 0 2	
18	U 0 2 9	5,000	T	S 0 1 S 0 2	
19	U 0 3 0	5,000	T	S 0 1 S 0 2	
20	U 0 3 1	69,000	T	S 0 1 S 0 2	
21	U 0 3 2	69,000	T	S 0 1 S 0 2	
22	U 0 3 3	5,000	T	S 0 1 S 0 2	
23	U 0 3 4	5,000	T	S 0 1 S 0 2	
24	U 0 3 5	5,000	T	S 0 1 S 0 2	
25	U 0 3 6	5,000	T	S 0 1 S 0 2	
26	U 0 3 7	69,000	T	S 0 1 S 0 2	
27	U 0 3 8	5,000	T	S 0 1 S 0 2	
28	U 0 3 9	5,000	T	S 0 1 S 0 2	
29	U 0 4 1	5,000	T	S 0 1 S 0 2	
30	U 0 4 2	5,000	T	S 0 1 S 0 2	
31	U 0 4 3	5,000	T	S 0 1 S 0 2	
32	U 0 4 4	69,000	T	S 0 1 S 0 2	
33	U 0 4 5	5,000	T	S 0 1 S 0 2	

Please print or type with ELITE type (12 characters per inch) in the unshaded areas only

Form Approved. OMB No. 2050-0034 Expires 12-31-91
GSA No. 0248-EPA-OT

EPA I.D. Number (enter from page 1): I L D 0 0 0 6 0 8 4 7 1

Secondary ID Number (enter from page 1):

XIV. Description of Hazardous Wastes (continued)

Line Number	A. EPA HAZARDOUS WASTE NO. (enter code)	B. ESTIMATED ANNUAL QUANTITY OF WASTE	C. UNIT OF MEASURE (enter code)	D. PROCESSES (1) PROCESS CODES (enter)		D. PROCESSES (2) PROCESS DESCRIPTION (If a code is not entered in D(1))
1	U 0 4 6	5,000	T	S 0 1 S 0 2		
2	U 0 4 7	5,000	T	S 0 1 S 0 2		
3	U 0 4 8	5,000	T	S 0 1 S 0 2		
4	U 0 4 9	5,000	T	S 0 1 S 0 2		
5	U 0 5 0	5,000	T	S 0 1 S 0 2		
6	U 0 5 1	69,000	T	S 0 1 S 0 2		
7	U 0 5 2	69,000	T	S 0 1 S 0 2		
8	U 0 5 3	69,000	T	S 0 1 S 0 2		
9	U 0 5 5	69,000	T	S 0 1 S 0 2		
10	U 0 5 6	69,000	T	S 0 1 S 0 2		
11	U 0 5 7	69,000	T	S 0 1 S 0 2		
12	U 0 5 8	5,000	T	S 0 1 S 0 2		
13	U 0 5 9	5,000	T	S 0 1 S 0 2		
14	U 0 6 0	5,000	T	S 0 1 S 0 2		
15	U 0 6 1	5,000	T	S 0 1 S 0 2		
16	U 0 6 2	5,000	T	S 0 1 S 0 2		
17	U 0 6 3	5,000	T	S 0 1 S 0 2		
18	U 0 6 4	5,000	T	S 0 1 S 0 2		
19	U 0 6 6	5,000	T	S 0 1 S 0 2		
20	U 0 6 7	5,000	T	S 0 1 S 0 2		
21	U 0 6 8	5,000	T	S 0 1 S 0 2		
22	U 0 6 9	69,000	T	S 0 1 S 0 2		
23	U 0 7 0	69,000	T	S 0 1 S 0 2		
24	U 0 7 1	5,000	T	S 0 1 S 0 2		
25	U 0 7 2	5,000	T	S 0 1 S 0 2		
26	U 0 7 3	5,000	T	S 0 1 S 0 2		
27	U 0 7 4	5,000	T	S 0 1 S 0 2		
28	U 0 7 5	5,000	T	S 0 1 S 0 2		
29	U 0 7 6	5,000	T	S 0 1 S 0 2		
30	U 0 7 7	5,000	T	S 0 1 S 0 2		
31	U 0 7 8	5,000	T	S 0 1 S 0 2		
32	U 0 7 9	5,000	T	S 0 1 S 0 2		
33	U 0 8 0	5,000	T	S 0 1 S 0 2		

EPA I.D. Number (enter from page 1): I L D 0 0 0 6 0 8 4 7 1

Secondary ID Number (enter from page 1):

XIV. Description of Hazardous Wastes (continued)

Line Number	A. EPA Hazardous Waste No. (enter code)	B. Estimated Annual Quantity of Waste	C. Unit of Measure (enter code)	D. Processes (1) Process Codes (enter)	D. Processes (2) Process Description (If a code is not entered in D(1))
1	U 0 8 1	5,000	T	S 0 1 S 0 2	
2	U 0 8 2	5,000	T	S 0 1 S 0 2	
3	U 0 8 3	5,000	T	S 0 1 S 0 2	
4	U 0 8 4	5,000	T	S 0 1 S 0 2	
5	U 0 8 5	5,000	T	S 0 1 S 0 2	
6	U 0 8 6	5,000	T	S 0 1 S 0 2	
7	U 0 8 7	5,000	T	S 0 1 S 0 2	
8	U 0 8 8	69,000	T	S 0 1 S 0 2	
9	U 0 8 9	5,000	T	S 0 1 S 0 2	
10	U 0 9 0	5,000	T	S 0 1 S 0 2	
11	U 0 9 1	5,000	T	S 0 1 S 0 2	
12	U 0 9 2	69,000	T	S 0 1 S 0 2	
13	U 0 9 3	5,000	T	S 0 1 S 0 2	
14	U 0 9 4	5,000	T	S 0 1 S 0 2	
15	U 0 9 5	5,000	T	S 0 1 S 0 2	
16	U 0 9 6	5,000	T	S 0 1 S 0 2	
17	U 0 9 7	5,000	T	S 0 1 S 0 2	
18	U 0 9 8	5,000	T	S 0 1 S 0 2	
19	U 0 9 9	5,000	T	S 0 1 S 0 2	
20	U 1 0 1	5,000	T	S 0 1 S 0 2	
21	U 1 0 2	5,000	T	S 0 1 S 0 2	
22	U 1 0 3	5,000	T	S 0 1 S 0 2	
23	U 1 0 5	5,000	T	S 0 1 S 0 2	
24	U 1 0 6	5,000	T	S 0 1 S 0 2	
25	U 1 0 7	5,000	T	S 0 1 S 0 2	
26	U 1 0 8	5,000	T	S 0 1 S 0 2	
27	U 1 0 9	5,000	T	S 0 1 S 0 2	
28	U 1 1 0	5,000	T	S 0 1 S 0 2	
29	U 1 1 1	5,000	T	S 0 1 S 0 2	
30	U 1 1 2	5,000	T	S 0 1 S 0 2	
31	U 1 1 3	5,000	T	S 0 1 S 0 2	
32	U 1 1 4	5,000	T	S 0 1 S 0 2	
33	U 1 1 5	5,000	T	S 0 1 S 0 2	

Please print or type with ELITE type (12 characters per inch) in the unshaded areas only

Form Approved. OMB No. 2050-0034 Expires 12-31-91
GSA No. 0246-EPA-OT

EPA I.D. Number (enter from page 1): I L D 0 0 0 6 0 8 4 7 1

Secondary ID Number (enter from page 1):

XIV. Description of Hazardous Wastes (continued)

Line Number	A. EPA Hazardous Waste Number (enter code)	B. Estimated Annual Quantity of Waste	C. Unit of Measure (enter code)	D. Processes (1) Process Codes (enter)	(2) Process Description (If a code is not entered in D(1))
1	U 1 1 6	5,000	T	S 0 1 S 0 2	
2	U 1 1 7	69,000	T	S 0 1 S 0 2	
3	U 1 1 8	5,000	T	S 0 1 S 0 2	
4	U 1 1 9	5,000	T	S 0 1 S 0 2	
5	U 1 2 0	5,000	T	S 0 1 S 0 2	
6	U 1 2 1	5,000	T	S 0 1 S 0 2	
7	U 1 2 2	5,000	T	S 0 1 S 0 2	
8	U 1 2 3	5,000	T	S 0 1 S 0 2	
9	U 1 2 4	5,000	T	S 0 1 S 0 2	
10	U 1 2 5	5,000	T	S 0 1 S 0 2	
11	U 1 2 6	5,000	T	S 0 1 S 0 2	
12	U 1 2 7	5,000	T	S 0 1 S 0 2	
13	U 1 2 8	5,000	T	S 0 1 S 0 2	
14	U 1 2 9	5,000	T	S 0 1 S 0 2	
15	U 1 3 0	5,000	T	S 0 1 S 0 2	
16	U 1 3 1	5,000	T	S 0 1 S 0 2	
17	U 1 3 2	5,000	T	S 0 1 S 0 2	
18	U 1 3 3	5,000	T	S 0 1 S 0 2	
19	U 1 3 4	5,000	T	S 0 1 S 0 2	
20	U 1 3 5	5,000	T	S 0 1 S 0 2	
21	U 1 3 6	5,000	T	S 0 1 S 0 2	
22	U 1 3 7	5,000	T	S 0 1 S 0 2	
23	U 1 3 8	5,000	T	S 0 1 S 0 2	
24	U 1 4 0	69,000	T	S 0 1 S 0 2	
25	U 1 4 1	5,000	T	S 0 1 S 0 2	
26	U 1 4 2	5,000	T	S 0 1 S 0 2	
27	U 1 4 3	5,000	T	S 0 1 S 0 2	
28	U 1 4 4	5,000	T	S 0 1 S 0 2	
29	U 1 4 5	5,000	T	S 0 1 S 0 2	
30	U 1 4 6	5,000	T	S 0 1 S 0 2	
31	U 1 4 7	5,000	T	S 0 1 S 0 2	
32	U 1 4 8	5,000	T	S 0 1 S 0 2	
33	U 1 4 9	5,000	T	S 0 1 S 0 2	

Please print or type with ELITE type [redacted] characters per inch in the unshaded areas only [redacted]

OMB No. 2050-0034 Expires 12-31-91
GSA No. 0246-EPA-OT

EPA I.D. Number (enter from page 1): E D 0 0 0 6 0 8 4 7 1

Secondary ID Number (enter from page 1):

XIV. Description of Hazardous Wastes (continued)

Line Number	A. EPA Hazardous Waste No. (enter code)	B. Estimated Annual Quantity of Waste	C. Unit of Measure (enter code)	D. Processes (1) Process Codes (enter)	D. Processes (2) Process Description (If a code is not entered in D(1))
1	U 1 5 0	5,000	T	S 0 1 S 0 2	
2	U 1 5 1	5,000	T	S 0 1 S 0 2	
3	U 1 5 2	5,000	T	S 0 1 S 0 2	
4	U 1 5 3	5,000	T	S 0 1 S 0 2	
5	U 1 5 4	69,000	T	S 0 1 S 0 2	
6	U 1 5 5	5,000	T	S 0 1 S 0 2	
7	U 1 5 6	5,000	T	S 0 1 S 0 2	
8	U 1 5 7	5,000	T	S 0 1 S 0 2	
9	U 1 5 8	5,000	T	S 0 1 S 0 2	
10	U 1 5 9	69,000	T	S 0 1 S 0 2	
11	U 1 6 0	5,000	T	S 0 1 S 0 2	
12	U 1 6 1	69,000	T	S 0 1 S 0 2	
13	U 1 6 2	69,000	T	S 0 1 S 0 2	
14	U 1 6 3	5,000	T	S 0 1 S 0 2	
15	U 1 6 4	5,000	T	S 0 1 S 0 2	
16	U 1 6 5	69,000	T	S 0 1 S 0 2	
17	U 1 6 6	5,000	T	S 0 1 S 0 2	
18	U 1 6 7	5,000	T	S 0 1 S 0 2	
19	U 1 6 8	5,000	T	S 0 1 S 0 2	
20	U 1 6 9	69,000	T	S 0 1 S 0 2	
21	U 1 7 0	5,000	T	S 0 1 S 0 2	
22	U 1 7 1	5,000	T	S 0 1 S 0 2	
23	U 1 7 2	5,000	T	S 0 1 S 0 2	
24	U 1 7 3	5,000	T	S 0 1 S 0 2	
25	U 1 7 4	5,000	T	S 0 1 S 0 2	
26	U 1 7 6	5,000	T	S 0 1 S 0 2	
27	U 1 7 7	5,000	T	S 0 1 S 0 2	
28	U 1 7 8	5,000	T	S 0 1 S 0 2	
29	U 1 7 9	5,000	T	S 0 1 S 0 2	
30	U 1 8 0	5,000	T	S 0 1 S 0 2	
31	U 1 8 1	5,000	T	S 0 1 S 0 2	
32	U 1 8 2	5,000	T	S 0 1 S 0 2	
33	U 1 8 3	5,000	T	S 0 1 S 0 2	

Please print or type with ELITE type (12 characters per inch) in the unshaded areas only

Form Approved. OMB No. 2050-0034 Expires 12-31-91
EPA No. 0248-EPA-OT

EPA I.D. Number (enter from page 1): I L D 0 0 0 6 0 8 4 7 1

Secondary ID Number (enter from page 1)

XIV. Description of Hazardous Wastes (continued)

Line Number	A. EPA Hazardous Waste No. (enter code)	B. Estimated Annual Quantity of Waste	C. Unit of Measure (enter code)	D. Processes (1) Process Codes (enter)	(2) Process Description (if a code is not entered in D(1))
1	U 1 8 4	5,000	T	S 0 1 S 0 2	
2	U 1 8 5	5,000	T	S 0 1 S 0 2	
3	U 1 8 6	5,000	T	S 0 1 S 0 2	
4	U 1 8 7	5,000	T	S 0 1 S 0 2	
5	U 1 8 8	69,000	T	S 0 1 S 0 2	
6	U 1 8 9	5,000	T	S 0 1 S 0 2	
7	U 1 9 0	5,000	T	S 0 1 S 0 2	
8	U 1 9 1	5,000	T	S 0 1 S 0 2	
9	U 1 9 2	5,000	T	S 0 1 S 0 2	
10	U 1 9 3	5,000	T	S 0 1 S 0 2	
11	U 1 9 4	5,000	T	S 0 1 S 0 2	
12	U 1 9 6	69,000	T	S 0 1 S 0 2	
13	U 1 9 7	5,000	T	S 0 1 S 0 2	
14	U 2 0 0	5,000	T	S 0 1 S 0 2	
15	U 2 0 1	5,000	T	S 0 1 S 0 2	
16	U 2 0 2	5,000	T	S 0 1 S 0 2	
17	U 2 0 3	5,000	T	S 0 1 S 0 2	
18	U 2 0 4	5,000	T	S 0 1 S 0 2	
19	U 2 0 5	5,000	T	S 0 1 S 0 2	
20	U 2 0 6	5,000	T	S 0 1 S 0 2	
21	U 2 0 7	5,000	T	S 0 1 S 0 2	
22	U 2 0 8	5,000	T	S 0 1 S 0 2	
23	U 2 0 9	5,000	T	S 0 1 S 0 2	
24	U 2 1 0	86,000	T	S 0 1 S 0 2	
25	U 2 1 1	5,000	T	S 0 1 S 0 2	
26	U 2 1 3	69,000	T	S 0 1 S 0 2	
27	U 2 1 4	5,000	T	S 0 1 S 0 2	
28	U 2 1 5	5,000	T	S 0 1 S 0 2	
29	U 2 1 6	5,000	T	S 0 1 S 0 2	
30	U 2 1 7	5,000	T	S 0 1 S 0 2	
31	U 2 1 8	5,000	T	S 0 1 S 0 2	
32	U 2 1 9	5,000	T	S 0 1 S 0 2	
33	U 2 2 0	69,000	T	S 0 1 S 0 2	

Please print or type with ELITE type (12 characters per inch) in the unshaded areas only

Form Approved. OMB No. 2050-0034 Expires 12-31-91
EPA No. 0246-EPA-OT

EPA I.D. Number (enter from page 1): I L D 0 0 0 6 0 8 4 7 1

Secondary ID Number (enter from page 1):

XIV. Description of Hazardous Wastes (continued)

Line Number	A. EPA HAZARDOUS WASTE NO. (enter code)	B. ESTIMATED ANNUAL QUANTITY OF WASTE	C. UNIT OF MEASURE (enter code)	D. PROCESSES (1) PROCESS CODES (enter)	D. PROCESSES (2) PROCESS DESCRIPTION (If a code is not entered in D(1))
1	U 2 2 1	5,000	T	S 0 1 S 0 2	
2	U 2 2 2	5,000	T	S 0 1 S 0 2	
3	U 2 2 3	69,000	T	S 0 1 S 0 2	
4	U 2 2 5	5,000	T	S 0 1 S 0 2	
5	U 2 2 6	86,000	T	S 0 1 S 0 2	
6	U 2 2 7	5,000	T	S 0 1 S 0 2	
7	U 2 2 8	86,000	T	S 0 1 S 0 2	
8	U 2 3 4	5,000	T	S 0 1 S 0 2	
9	U 2 3 5	5,000	T	S 0 1 S 0 2	
10	U 2 3 6	5,000	T	S 0 1 S 0 2	
11	U 2 3 7	5,000	T	S 0 1 S 0 2	
12	U 2 3 8	69,000	T	S 0 1 S 0 2	
13	U 2 3 9	69,000	T	S 0 1 S 0 2	
14	U 2 4 0	5,000	T	S 0 1 S 0 2	
15	U 2 4 3	5,000	T	S 0 1 S 0 2	
16	U 2 4 4	5,000	T	S 0 1 S 0 2	
17	U 2 4 6	5,000	T	S 0 1 S 0 2	
18	U 2 4 7	5,000	T	S 0 1 S 0 2	
19	U 2 4 8	5,000	T	S 0 1 S 0 2	
20	U 2 4 9	5,000	T	S 0 1 S 0 2	
21	U 3 2 8	5,000	T	S 0 1 S 0 2	
22	U 3 5 3	5,000	T	S 0 1 S 0 2	
23	U 3 5 9	5,000	T	S 0 1 S 0 2	
24	P 0 0 1	5,000	T	S 0 1 S 0 2	
25	P 0 0 2	5,000	T	S 0 1 S 0 2	
26	P 0 0 3	5,000	T	S 0 1 S 0 2	
27	P 0 0 4	5,000	T	S 0 1 S 0 2	
28	P 0 0 5	5,000	T	S 0 1 S 0 2	
29	P 0 0 6	5,000	T	S 0 1 S 0 2	
30	P 0 0 7	5,000	T	S 0 1 S 0 2	
31	P 0 0 8	5,000	T	S 0 1 S 0 2	
32	P 0 0 9	5,000	T	S 0 1 S 0 2	
33	P 0 1 0	69,000	T	S 0 1 S 0 2	

Please print or type with ELITE type (12 characters per inch) in the unshaded areas only

Form Approved. OMB No. 2050-0034 Expires 12-31-91
GSA No. 0246-EPA-OT

EPA I.D. Number (enter from page 1)	Secondary ID Number (enter from page 1)
I L D 0 0 0 6 0 8 4 7 1	

XIV. Description of Hazardous Wastes (continued)

Line Number	A. EPA Hazardous Waste No. (enter code)	B. Estimated Annual Quantity of Waste	C. Unit of Measure (enter code)	D. Processes (1) Process Codes (enter)	D. Processes (2) Process Description (If a code is not entered in D(1))
1	P 0 1 1	5,000	T	S 0 1 S 0 2	
2	P 0 1 2	5,000	T	S 0 1 S 0 2	
3	P 0 1 3	5,000	T	S 0 1 S 0 2	
4	P 0 1 4	5,000	T	S 0 1 S 0 2	
5	P 0 1 5	5,000	T	S 0 1 S 0 2	
6	P 0 1 6	5,000	T	S 0 1 S 0 2	
7	P 0 1 7	5,000	T	S 0 1 S 0 2	
8	P 0 1 8	5,000	T	S 0 1 S 0 2	
9	P 0 2 0	5,000	T	S 0 1 S 0 2	
10	P 0 2 1	69,000	T	S 0 1 S 0 2	
11	P 0 2 2	5,000	T	S 0 1 S 0 2	
12	P 0 2 3	5,000	T	S 0 1 S 0 2	
13	P 0 2 4	5,000	T	S 0 1 S 0 2	
14	P 0 2 6	5,000	T	S 0 1 S 0 2	
15	P 0 2 7	5,000	T	S 0 1 S 0 2	
16	P 0 2 8	5,000	T	S 0 1 S 0 2	
17	P 0 2 9	69,000	T	S 0 1 S 0 2	
18	P 0 3 0	69,000	T	S 0 1 S 0 2	
19	P 0 3 1	5,000	T	S 0 1 S 0 2	
20	P 0 3 3	5,000	T	S 0 1 S 0 2	
21	P 0 3 4	5,000	T	S 0 1 S 0 2	
22	P 0 3 6	5,000	T	S 0 1 S 0 2	
23	P 0 3 7	5,000	T	S 0 1 S 0 2	
24	P 0 3 8	5,000	T	S 0 1 S 0 2	
25	P 0 3 9	5,000	T	S 0 1 S 0 2	
26	P 0 4 0	5,000	T	S 0 1 S 0 2	
27	P 0 4 1	5,000	T	S 0 1 S 0 2	
28	P 0 4 2	5,000	T	S 0 1 S 0 2	
29	P 0 4 3	5,000	T	S 0 1 S 0 2	
30	P 0 4 4	5,000	T	S 0 1 S 0 2	
31	P 0 4 5	5,000	T	S 0 1 S 0 2	
32	P 0 4 6	5,000	T	S 0 1 S 0 2	
33	P 0 4 7	5,000	T	S 0 1 S 0 2	

Please print or type with ELITE type (12 characters per inch) in the unshaded areas only

Approved. OMB No. 2050-0034 Expires 12-31-91
EPA No. 0246-EPA-OT

EPA I.D. Number (enter from page 1): I L D 0 0 0 6 0 8 4 7 1

Secondary ID Number (enter from page 1):

XIV. Description of Hazardous Wastes (continued)

Line Number	A. EPA Hazardous Waste No. (enter code)	B. Estimated Annual Quantity of Waste	C. Unit of Measure (enter code)	D. Processes (1) Process Codes (enter)	D. Processes (2) Process Description (If a code is not entered in D(1))
1	P048	5,000	T	S01 S02	
2	P049	5,000	T	S01 S02	
3	P050	5,000	T	S01 S02	
4	P051	5,000	T	S01 S02	
5	P054	5,000	T	S01 S02	
6	P056	5,000	T	S01 S02	
7	P057	5,000	T	S01 S02	
8	P058	5,000	T	S01 S02	
9	P059	5,000	T	S01 S02	
10	P060	5,000	T	S01 S02	
11	P062	5,000	T	S01 S02	
12	P063	5,000	T	S01 S02	
13	P064	5,000	T	S01 S02	
14	P065	5,000	T	S01 S02	
15	P066	5,000	T	S01 S02	
16	P067	5,000	T	S01 S02	
17	P068	5,000	T	S01 S02	
18	P069	5,000	T	S01 S02	
19	P070	5,000	T	S01 S02	
20	P071	5,000	T	S01 S02	
21	P072	5,000	T	S01 S02	
22	P073	5,000	T	S01 S02	
23	P074	69,000	T	S01 S02	
24	P075	69,000	T	S01 S02	
25	P076	69,000	T	S01 S02	
26	P077	5,000	T	S01 S02	
27	P078	5,000	T	S01 S02	
28	P081	5,000	T	S01 S02	
29	P082	5,000	T	S01 S02	
30	P084	5,000	T	S01 S02	
31	P085	5,000	T	S01 S02	
32	P087	5,000	T	S01 S02	
33	P088	5,000	T	S01 S02	

Please print or type with ELITE type (12 characters per inch) in the unshaded areas only

Form Approved. OMB No. 2050-0034 Expires 12-31-91
EPA No. 0246-EPA-OT

EPA I.D. Number (enter from page 1): D 0 0 0 6 0 8 4 7 1

Secondary ID Number (enter from page 1):

XIV. Description of Hazardous Wastes (continued)

Line Number	A. EPA HAZARDOUS WASTE NO. (enter code)	B. ESTIMATED ANNUAL QUANTITY OF WASTE	C. UNIT OF MEASURE (enter code)	D. PROCESSES (1) PROCESS CODES (enter)									(2) PROCESS DESCRIPTION (If a code is not entered in D(1))
1	P089	5,000	T	S01	S02								
2	P092	5,000	T	S01	S02								
3	P093	5,000	T	S01	S02								
4	P094	5,000	T	S01	S02								
5	P095	5,000	T	S01	S02								
6	P096	5,000	T	S01	S02								
7	P097	5,000	T	S01	S02								
8	P098	5,000	T	S01	S02								
9	P099	69,000	T	S01	S02								
10	P101	5,000	T	S01	S02								
11	P102	5,000	T	S01	S02								
12	P103	5,000	T	S01	S02								
13	P104	69,000	T	S01	S02								
14	P105	69,000	T	S01	S02								
15	P106	5,000	T	S01	S02								
16	P107	5,000	T	S01	S02								
17	P108	5,000	T	S01	S02								
18	P109	5,000	T	S01	S02								
19	P110	5,000	T	S01	S02								
20	P111	5,000	T	S01	S02								
21	P112	5,000	T	S01	S02								
22	P113	5,000	T	S01	S02								
23	P114	5,000	T	S01	S02								
24	P115	5,000	T	S01	S02								
25	P116	5,000	T	S01	S02								
26	P118	5,000	T	S01	S02								
27	P119	5,000	T	S01	S02								
28	P120	5,000	T	S01	S02								
29	P121	69,000	T	S01	S02								
30	P122	5,000	T	S01	S02								
31	P123	5,000	T	S01	S02								
32	F032	10,000	T	S01	S02								
33	F034	10,000	T	S01	S02								

EPA Form 8700-23 (01-90)

Please print or type with ELITE type (12 characters per inch) in the unshaded areas only

Form Approved. OMB No. 2050-0034 Expires 12-31-91
GSA No. 0246-EPA-OT

EPA I.D. Number (enter from page 1)	Secondary ID Number (enter from page 1)
ILD000608471	

XIII. Description of Hazardous Wastes (continued)

Line Number	A. EPA Hazardous Waste No. (enter code)	B. Estimated Annual Quantity of Waste	C. Unit of Measure (enter code)	D. Processes (1) Process Codes (Enter)	(2) Process Description (If a code is not entered in D(1))
1	F035	10,000	T	S01 S02	
2	K107	10,000	T	S01 S02	
3	K108	10,000	T	S01 S02	
4	K109	10,000	T	S01 S02	
5	K110	10,000	T	S01 S02	
6	K131	10,000	T	S01 S02	
7	K132	10,000	T	S01 S02	
8	K064	10,000	T	S01 S02	
9	K065	10,000	T	S01 S02	
10	K066	10,000	T	S01 S02	
11	K088	10,000	T	S01 S02	
12	K090	10,000	T	S01 S02	
13	K091	10,000	T	S01 S02	
14	P026	10,000	T	S01 S02	
15	D001	10,000	T	T04	F1
16	D002	10,000	T	T04	F1
17	D003	10,000	T	T04	F1
18	D004	10,000	T	T04	F1
19	D005	10,000	T	T04	F1
20	D006	10,000	T	T04	F1
21	D007	10,000	T	T04	F1
22	D008	10,000	T	T04	F1
23	D009	10,000	T	T04	F1
24	D010	10,000	T	T04	F1
25	D011	10,000	T	T04	F1
26	D012	10,000	T	T04	F1
27	D013	10,000	T	T04	F1
28	D014	10,000	T	T04	F1
29	D015	10,000	T	T04	F1
30	D016	10,000	T	T04	F1
31	D017	10,000	T	T04	F1
32	D018	10,000	T	T04	F1
33	D019	10,000	T	T04	F1

Please print or type with ELITE type (12 characters per inch) in the unshaded areas only

Form Approved. OMB No. 2050-0034 Expires 12-31-91
GSA No. 0246-EPA-OT

EPA I.D. Number (enter from page 1)												Secondary Number (enter from page 1)											
I	L	D	0	0	0	6	0	8	4	7	1												

XIII. Description of Hazardous Wastes

Line Number	A. EPA Hazardous Waste No. (enter code)				B. Estimated Average Quantity of Waste	C. Unit of Measure (enter code)	D. Processes (1) Process Codes (enter code)										D. Processes (2) Process Description (for F codes not entered above)
1	D	0	2	0	10,000	T	T	0	4								F1
2	D	0	2	1	10,000	T	T	0	4								F1
3	D	0	2	2	10,000	T	T	0	4								F1
4	D	0	2	3	10,000	T	T	0	4								F1
5	D	0	2	4	10,000	T	T	0	4								F1
6	D	0	2	5	10,000	T	T	0	4								F1
7	D	0	2	6	10,000	T	T	0	4								F1
8	D	0	2	7	10,000	T	T	0	4								F1
9	D	0	2	8	10,000	T	T	0	4								F1
10	D	0	2	9	10,000	T	T	0	4								F1
11	D	0	3	0	10,000	T	T	0	4								F1
12	D	0	3	1	10,000	T	T	0	4								F1
13	D	0	3	2	10,000	T	T	0	4								F1
14	D	0	3	3	10,000	T	T	0	4								F1
15	D	0	3	4	10,000	T	T	0	4								F1
16	D	0	3	5	10,000	T	T	0	4								F1
17	D	0	3	6	10,000	T	T	0	4								F1
18	D	0	3	7	10,000	T	T	0	4								F1
19	D	0	3	8	10,000	T	T	0	4								F1
20	D	0	3	9	10,000	T	T	0	4								F1
21	D	0	4	0	10,000	T	T	0	4								F1
22	D	0	4	1	10,000	T	T	0	4								F1
23	D	0	4	2	10,000	T	T	0	4								F1
24	D	0	4	3	10,000	T	T	0	4								F1
25	F	0	0	1	10,000	T	T	0	4								F1
26	F	0	0	2	10,000	T	T	0	4								F1
27	F	0	0	3	10,000	T	T	0	4								F1
28	F	0	0	4	10,000	T	T	0	4								F1
29	F	0	0	5	10,000	T	T	0	4								F1
30	F	0	0	6	10,000	T	T	0	4								F1
31	F	0	0	7	10,000	T	T	0	4								F1
32	F	0	0	8	10,000	T	T	0	4								F1
33	F	0	0	9	10,000	T	T	0	4								F1

Please print or type with ELITE type (12 characters per inch) in the unshaded areas only

Form Approved. OMB No. 2050-0034 Expires 12-31-91
GSA No. 0246-EPA-OT

EPA I.D. Number (enter from page 1)												Secondary ID Number (enter from page 1)
I	L	D	0	0	0	6	0	8	4	7	1	

XIII. Description of Hazardous Wastes (continued)

Line Number	A. EPA Hazardous Waste No. (enter code)	B. Estimated Annual Quantity of Waste	C. Unit of Measure (enter code)	D. Processes (1) Process Codes (enter)			(2) Process Description (if a code is not entered in D(1))
1	F 0 1 0	10,000	T	T 0 4			F1
2	F 0 1 1	10,000	T	T 0 4			F1
3	F 0 1 2	10,000	T	T 0 4			F1
4	F 0 1 9	10,000	T	T 0 4			F1
5	F 0 2 0	10,000	T	T 0 4			F1
6	F 0 2 1	10,000	T	T 0 4			F1
7	F 0 2 2	10,000	T	T 0 4			F1
8	F 0 2 3	10,000	T	T 0 4			F1
9	F 0 2 4	10,000	T	T 0 4			F1
10	F 0 2 5	10,000	T	T 0 4			F1
11	F 0 2 6	10,000	T	T 0 4			F1
12	F 0 2 7	10,000	T	T 0 4			F1
13	F 0 2 8	10,000	T	T 0 4			F1
14	F 0 3 9	10,000	T	T 0 4			F1
15	K 0 0 1	10,000	T	T 0 4			F1
16	K 0 0 2	10,000	T	T 0 4			F1
17	K 0 0 3	10,000	T	T 0 4			F1
18	K 0 0 4	10,000	T	T 0 4			F1
19	K 0 0 5	10,000	T	T 0 4			F1
20	K 0 0 6	10,000	T	T 0 4			F1
21	K 0 0 7	10,000	T	T 0 4			F1
22	K 0 0 8	10,000	T	T 0 4			F1
23	K 0 0 9	10,000	T	T 0 4			F1
24	K 0 1 0	10,000	T	T 0 4			F1
25	K 0 1 1	10,000	T	T 0 4			F1
26	K 0 1 3	10,000	T	T 0 4			F1
27	K 0 1 4	10,000	T	T 0 4			F1
28	K 0 1 5	10,000	T	T 0 4			F1
29	K 0 1 6	10,000	T	T 0 4			F1
30	K 0 1 7	10,000	T	T 0 4			F1
31	K 0 1 8	10,000	T	T 0 4			F1
32	K 0 1 9	10,000	T	T 0 4			F1
33	K 0 2 0	10,000	T	T 0 4			F1

Please print or type with ELITE type (12 characters per inch) in the unshaded areas only

Form Approved. OMB No. 2050-0034 Expires 12-31-91
GSA No. 0246-EPA-OT

EPA ID Number (enter from page 1)	Secondary ID Number (enter from page 1)
I L D 0 0 0 6 0 8 4 7 1	

XIII. Description of Hazardous Waste (continued)

Line Number	A. EPA Hazardous Waste No. (enter code)	B. Estimated Annual Quantity of Waste	C. Unit of Measure (enter code)	D. Processes (1) Process Codes (enter)	D. Processes (2) Process Description (If a code is not entered in D(1))
21	K021	10,000	T	T04	F1
22	K022	10,000	T	T04	F1
23	K023	10,000	T	T04	F1
24	K024	10,000	T	T04	F1
25	K025	10,000	T	T04	F1
26	K026	10,000	T	T04	F1
27	K027	10,000	T	T04	F1
28	K028	10,000	T	T04	F1
29	K029	10,000	T	T04	F1
30	K030	10,000	T	T04	F1
31	K031	10,000	T	T04	F1
32	K032	10,000	T	T04	F1
33	K033	10,000	T	T04	F1
34	K034	10,000	T	T04	F1
35	K035	10,000	T	T04	F1
36	K036	10,000	T	T04	F1
37	K037	10,000	T	T04	F1
38	K038	10,000	T	T04	F1
39	K039	10,000	T	T04	F1
40	K040	10,000	T	T04	F1
41	K041	10,000	T	T04	F1
42	K042	10,000	T	T04	F1
43	K043	10,000	T	T04	F1
44	K044	10,000	T	T04	F1
45	K045	10,000	T	T04	F1
46	K046	10,000	T	T04	F1
47	K047	10,000	T	T04	F1
48	K048	10,000	T	T04	F1
49	K049	10,000	T	T04	F1
50	K050	10,000	T	T04	F1
51	K051	10,000	T	T04	F1
52	K052	10,000	T	T04	F1
53	K053	10,000	T	T04	F1
54	K054	10,000	T	T04	F1
55	K055	10,000	T	T04	F1
56	K056	10,000	T	T04	F1
57	K057	10,000	T	T04	F1
58	K058	10,000	T	T04	F1
59	K059	10,000	T	T04	F1
60	K060	10,000	T	T04	F1
61	K061	10,000	T	T04	F1
62	K062	10,000	T	T04	F1
63	K063	10,000	T	T04	F1

EPA Form 8700-23 (01-90)

Please print or type with ELITE type (12 characters per inch) in the unshaded areas only

Form Approved. OMB No. 2050-0034 Expires 12-31-91
GSA No. 0246-EPA-OT

EPA I.D. Number (enter from page 1)	Secondary ID Number (enter from page 1)
I L D 0 0 0 6 0 8 4 7 1	

XIII. Description of Hazardous Wastes (continued)

Line Number	A. EPA HAZARDOUS WASTE NO. (enter code)	B. ESTIMATED ANNUAL QUANTITY OF WASTE	C. UNIT OF MEASURE (enter code)	D. PROCESS CODES (enter) (1) PROCESS CODES (enter)	(2) PROCESS DESCRIPTION (if a code is not entered in D(1))
1	K061	10,000	T	T04	F1
2	K062	10,000	T	T04	F1
3	K069	10,000	T	T04	F1
4	K071	10,000	T	T04	F1
5	K073	10,000	T	T04	F1
6	K083	10,000	T	T04	F1
7	K084	10,000	T	T04	F1
8	K085	10,000	T	T04	F1
9	K086	10,000	T	T04	F1
10	K087	10,000	T	T04	F1
11	K093	10,000	T	T04	F1
12	K094	10,000	T	T04	F1
13	K095	10,000	T	T04	F1
14	K096	10,000	T	T04	F1
15	K097	10,000	T	T04	F1
16	K098	10,000	T	T04	F1
17	K099	10,000	T	T04	F1
18	K100	10,000	T	T04	F1
19	K101	10,000	T	T04	F1
20	K102	10,000	T	T04	F1
21	K103	10,000	T	T04	F1
22	K104	10,000	T	T04	F1
23	K105	10,000	T	T04	F1
24	K106	10,000	T	T04	F1
25	K107	10,000	T	T04	F1
26	K108	10,000	T	T04	F1
27	K109	10,000	T	T04	F1
28	K110	10,000	T	T04	F1
29	K111	10,000	T	T04	F1
30	K112	10,000	T	T04	F1
31	K113	10,000	T	T04	F1
32	K114	10,000	T	T04	F1
33	K115	10,000	T	T04	F1

EPA Form 8700-23 (01-90)

Please print or type with ELITE type (12 characters per inch) in the unshaded areas only

Form Approved. OMB No. 2050-0034 Expires 12-31-91
GSA No. 0246-EPA-OT

EPA I.D. Number (enter from page 1)												Secondary ID Number (enter from page 1)
I	L	D	0	0	0	6	0	8	4	7	1	

XIII. Description of Hazardous Wastes (continued)

Line Number	A. EPA Hazardous Waste No. (enter code)				B. Estimated Annual Quantity of Waste	C. Unit of Measure (enter code)	D. Processes (1) Process Codes (enter)									D. Processes (2) Process Description (If a code is not entered in D(1))
21	K	1	2	4	10,000	T	T	0	4							F1
22	K	1	2	5	10,000	T	T	0	4							F1
23	K	1	2	6	10,000	T	T	0	4							F1
24	K	1	3	6	10,000	T	T	0	4							F1
25	U	0	0	1	10,000	T	T	0	4							F1
26	U	0	0	2	10,000	T	T	0	4							F1
27	U	0	0	3	10,000	T	T	0	4							F1
28	U	0	0	4	10,000	T	T	0	4							F1
29	U	0	0	5	10,000	T	T	0	4							F1
30	U	0	0	6	10,000	T	T	0	4							F1
31	U	0	0	7	10,000	T	T	0	4							F1
32	U	0	0	8	10,000	T	T	0	4							F1
33	U	0	0	9	10,000	T	T	0	4							F1
34	U	0	1	0	10,000	T	T	0	4							F1
35	U	0	1	1	10,000	T	T	0	4							F1
36	U	0	1	2	10,000	T	T	0	4							F1
37	U	0	1	4	10,000	T	T	0	4							F1
38	U	0	1	5	10,000	T	T	0	4							F1
39	U	0	1	6	10,000	T	T	0	4							F1
40	U	0	1	7	10,000	T	T	0	4							F1
41	U	0	1	8	10,000	T	T	0	4							F1
42	U	0	1	9	10,000	T	T	0	4							F1
43	U	0	2	0	10,000	T	T	0	4							F1
44	U	0	2	1	10,000	T	T	0	4							F1
45	U	0	2	2	10,000	T	T	0	4							F1
46	U	0	2	3	10,000	T	T	0	4							F1
47	U	0	2	4	10,000	T	T	0	4							F1
48	U	0	2	5	10,000	T	T	0	4							F1
49	U	0	2	6	10,000	T	T	0	4							F1
50	U	0	2	7	10,000	T	T	0	4							F1
51	U	0	2	8	10,000	T	T	0	4							F1
52	U	0	2	9	10,000	T	T	0	4							F1
53	U	0	3	0	10,000	T	T	0	4							F1

Please print or type with ELITE type (12 characters per inch) in the unshaded areas only

Form Approved. OMB No. 2050-0034 Expires 12-31-91
GSA No. 0246-EPA-OT

EPA I.D. Number (enter from page 1)												Secondary ID Number (enter from page 1)
I	L	D	0	0	0	6	0	8	4	7	1	

XIII. Description of Hazardous Wastes (continued)

Line Number	A. EPA Hazardous Waste No. (enter code)				B. Estimated Annual Quantity of Waste	C. Unit of Measure (enter code)	D. Processes (1) Process Codes (enter)			(2) Process Description (if a code is not entered in D(1))
21	U	0	3	1	10,000	T	T	0	4	F1
22	U	0	3	2	10,000	T	T	0	4	F1
23	U	0	3	3	10,000	T	T	0	4	F1
24	U	0	3	4	10,000	T	T	0	4	F1
25	U	0	3	5	10,000	T	T	0	4	F1
26	U	0	3	6	10,000	T	T	0	4	F1
27	U	0	3	7	10,000	T	T	0	4	F1
28	U	0	3	8	10,000	T	T	0	4	F1
29	U	0	3	9	10,000	T	T	0	4	F1
30	U	0	4	1	10,000	T	T	0	4	F1
31	U	0	4	2	10,000	T	T	0	4	F1
32	U	0	4	3	10,000	T	T	0	4	F1
33	U	0	4	4	10,000	T	T	0	4	F1
34	U	0	4	5	10,000	T	T	0	4	F1
35	U	0	4	6	10,000	T	T	0	4	F1
36	U	0	4	7	10,000	T	T	0	4	F1
37	U	0	4	8	10,000	T	T	0	4	F1
38	U	0	4	9	10,000	T	T	0	4	F1
39	U	0	5	0	10,000	T	T	0	4	F1
40	U	0	5	1	10,000	T	T	0	4	F1
41	U	0	5	2	10,000	T	T	0	4	F1
42	U	0	5	3	10,000	T	T	0	4	F1
43	U	0	5	5	10,000	T	T	0	4	F1
44	U	0	5	6	10,000	T	T	0	4	F1
45	U	0	5	7	10,000	T	T	0	4	F1
46	U	0	5	8	10,000	T	T	0	4	F1
47	U	0	6	0	10,000	T	T	0	4	F1
48	U	0	6	1	10,000	T	T	0	4	F1
49	U	0	6	2	10,000	T	T	0	4	F1
50	U	0	6	3	10,000	T	T	0	4	F1
51	U	0	6	4	10,000	T	T	0	4	F1
52	U	0	6	6	10,000	T	T	0	4	F1
53	U	0	6	7	10,000	T	T	0	4	F1

EPA Form 8700-23 (01-90)

Please print or type with ELITE type (12 characters per inch) in the unshaded areas only

Form Approved. OMB No. 2050-0034 Expires 12-31-91
GSA No. 0246-EPA-OT

EPA I.D. Number (enter from page 1)											Secondary ID Number (enter from page 1)
I	L	D	0	0	0	6	0	8	4	7	1

XIII. Description of Hazardous Wastes (continued)

Line Number	A. EPA Hazardous Waste No. (enter code)	B. Estimated Annual Quantity of Waste	C. Unit of Measure (enter code)	D. Processes (1) Process Codes (enter)			(2) Process Description (If a code is not entered in D(1))
1	U 0 6 8	10,000	T	T 0 4			F1
2	U 0 6 9	10,000	T	T 0 4			F1
3	U 0 7 0	10,000	T	T 0 4			F1
4	U 0 7 1	10,000	T	T 0 4			F1
5	U 0 7 2	10,000	T	T 0 4			F1
6	U 0 7 3	10,000	T	T 0 4			F1
7	U 0 7 4	10,000	T	T 0 4			F1
8	U 0 7 5	10,000	T	T 0 4			F1
9	U 0 7 6	10,000	T	T 0 4			F1
10	U 0 7 7	10,000	T	T 0 4			F1
11	U 0 7 8	10,000	T	T 0 4			F1
12	U 0 7 9	10,000	T	T 0 4			F1
13	U 0 8 0	10,000	T	T 0 4			F1
14	U 0 8 1	10,000	T	T 0 4			F1
15	U 0 8 2	10,000	T	T 0 4			F1
16	U 0 8 3	10,000	T	T 0 4			F1
17	U 0 8 4	10,000	T	T 0 4			F1
18	U 0 8 5	10,000	T	T 0 4			F1
19	U 0 8 6	10,000	T	T 0 4			F1
20	U 0 8 7	10,000	T	T 0 4			F1
21	U 0 8 8	10,000	T	T 0 4			F1
22	U 0 8 9	10,000	T	T 0 4			F1
23	U 0 9 0	10,000	T	T 0 4			F1
24	U 0 9 1	10,000	T	T 0 4			F1
25	U 0 9 2	10,000	T	T 0 4			F1
26	U 0 9 3	10,000	T	T 0 4			F1
27	U 0 9 4	10,000	T	T 0 4			F1
28	U 0 9 5	10,000	T	T 0 4			F1
29	U 0 9 6	10,000	T	T 0 4			F1
30	U 0 9 7	10,000	T	T 0 4			F1
31	U 0 9 8	10,000	T	T 0 4			F1
32	U 0 9 9	10,000	T	T 0 4			F1
33	U 1 0 1	10,000	T	T 0 4			F1

EPA Form 8700-23 (01-90)

Please print or type with ELITE type (12 characters per inch) in the unshaded areas only

Form Approved. OMB No. 2050-0034 Expires 12-31-91
GSA No. 0246-EPA-OT

EPA I.D. Number (enter from page 1)	Secondary ID Number (enter from page 1)
I D 0 0 0 6 0 8 4 7 1	

XIII. Description of Hazardous Wastes (continued)

Line Number	A. EPA Hazardous Waste No. (enter code)	B. Estimated Annual Quantity of Waste	C. Unit of Measure (enter code)	D. Processes (1) Process Codes (enter)	D. Processes (2) Process Description (If a code is not entered in D(1))
1	U 1 0 2	10,000	T	T 0 4	
2	U 1 0 3	10,000	T	T 0 4	
3	U 1 0 5	10,000	T	T 0 4	
4	U 1 0 6	10,000	T	T 0 4	
5	U 1 0 7	10,000	T	T 0 4	
6	U 1 0 8	10,000	T	T 0 4	
7	U 1 0 9	10,000	T	T 0 4	
8	U 1 1 0	10,000	T	T 0 4	
9	U 1 1 1	10,000	T	T 0 4	
10	U 1 1 2	10,000	T	T 0 4	
11	U 1 1 3	10,000	T	T 0 4	
12	U 1 1 4	10,000	T	T 0 4	
13	U 1 1 5	10,000	T	T 0 4	
14	U 1 1 6	10,000	T	T 0 4	
15	U 1 1 7	10,000	T	T 0 4	
16	U 1 1 8	10,000	T	T 0 4	
17	U 1 1 9	10,000	T	T 0 4	
18	U 1 2 0	10,000	T	T 0 4	
19	U 1 2 1	10,000	T	T 0 4	
20	U 1 2 2	10,000	T	T 0 4	
21	U 1 2 3	10,000	T	T 0 4	
22	U 1 2 4	10,000	T	T 0 4	
23	U 1 2 5	10,000	T	T 0 4	
24	U 1 2 6	10,000	T	T 0 4	
25	U 1 2 7	10,000	T	T 0 4	
26	U 1 2 8	10,000	T	T 0 4	
27	U 1 2 9	10,000	T	T 0 4	
28	U 1 3 0	10,000	T	T 0 4	
29	U 1 3 1	10,000	T	T 0 4	
30	U 1 3 2	10,000	T	T 0 4	
31	U 1 3 3	10,000	T	T 0 4	
32	U 1 3 4	10,000	T	T 0 4	
33	U 1 3 5	10,000	T	T 0 4	

EPA Form 8700-23 (01-90)

Please print or type with ELITE type (12 characters per inch) in the unshaded areas only

Form Approved. OMB No. 2050-0034 Expires 12-31-91
GSA No. 0246-EPA-OT

EPA I.D. Number (enter from page 1): I L D 0 0 0 6 0 8 4 7 1

Secondary ID Number (enter from page 1):

XIII. Description of Hazardous Wastes (continued)

Line Number	A. EPA HAZARDOUS WASTE NO. (enter code)	B. ESTIMATED ANNUAL QUANTITY OF WASTE	C. UNIT OF MEASURE (enter code)	D. PROCESS CODES (enter) (1) PROCESS CODE	(2) PROCESS DESCRIPTION (if a code is not entered in D(1))
1	U 1 3 6	10,000	T	T 0 4	F1
2	U 1 3 7	10,000	T	T 0 4	F1
3	U 1 3 8	10,000	T	T 0 4	F1
4	U 1 4 0	10,000	T	T 0 4	F1
5	U 1 4 1	10,000	T	T 0 4	F1
6	U 1 4 2	10,000	T	T 0 4	F1
7	U 1 4 3	10,000	T	T 0 4	F1
8	U 1 4 4	10,000	T	T 0 4	F1
9	U 1 4 5	10,000	T	T 0 4	F1
10	U 1 4 6	10,000	T	T 0 4	F1
11	U 1 4 7	10,000	T	T 0 4	F1
12	U 1 4 8	10,000	T	T 0 4	F1
13	U 1 4 9	10,000	T	T 0 4	F1
14	U 1 5 0	10,000	T	T 0 4	F1
15	U 1 5 1	10,000	T	T 0 4	F1
16	U 1 5 2	10,000	T	T 0 4	F1
17	U 1 5 3	10,000	T	T 0 4	F1
18	U 1 5 4	10,000	T	T 0 4	F1
19	U 1 5 5	10,000	T	T 0 4	F1
20	U 1 5 6	10,000	T	T 0 4	F1
21	U 1 5 7	10,000	T	T 0 4	F1
22	U 1 5 8	10,000	T	T 0 4	F1
23	U 1 5 9	10,000	T	T 0 4	F1
24	U 1 6 0	10,000	T	T 0 4	F1
25	U 1 6 1	10,000	T	T 0 4	F1
26	U 1 6 2	10,000	T	T 0 4	F1
27	U 1 6 3	10,000	T	T 0 4	F1
28	U 1 6 4	10,000	T	T 0 4	F1
29	U 1 6 5	10,000	T	T 0 4	F1
30	U 1 6 6	10,000	T	T 0 4	F1
31	U 1 6 7	10,000	T	T 0 4	F1
32	U 1 6 8	10,000	T	T 0 4	F1
33	U 1 6 9	10,000	T	T 0 4	F1

Please print or type with ELITE type (12 characters per inch) in the unshaded areas only

Form Approved. OMB No. 2050-0034 Expires 12-31-91
GSA No. 0246-EPA-OT

EPA I.D. Number (enter from page 1)	Secondary I.D. Number (enter from page 1)
ILD000608471	

XIV. Description of Hazardous Wastes (continued)

Line Number	A. EPA Hazardous Waste No. (enter code)	B. Estimated Annual Quantity of Waste	C. Unit of Measure (enter code)	D. Processes (1) Process Codes (enter)	D. Processes (2) Process Description (If a code is not entered in D(1))
1	U170	10,000	T	T04	F1
2	U171	10,000	T	T04	F1
3	U172	10,000	T	T04	F1
4	U173	10,000	T	T04	F1
5	U174	10,000	T	T04	F1
6	U176	10,000	T	T04	F1
7	U177	10,000	T	T04	F1
8	U178	10,000	T	T04	F1
9	U179	10,000	T	T04	F1
10	U180	10,000	T	T04	F1
11	U181	10,000	T	T04	F1
12	U182	10,000	T	T04	F1
13	U183	10,000	T	T04	F1
14	U184	10,000	T	T04	F1
15	U185	10,000	T	T04	F1
16	U186	10,000	T	T04	F1
17	U187	10,000	T	T04	F1
18	U188	10,000	T	T04	F1
19	U189	10,000	T	T04	F1
20	U190	10,000	T	T04	F1
21	U191	10,000	T	T04	F1
22	U192	10,000	T	T04	F1
23	U193	10,000	T	T04	F1
24	U194	10,000	T	T04	F1
25	U196	10,000	T	T04	F1
26	U197	10,000	T	T04	FF
27	U200	10,000	T	T04	F1
28	U201	10,000	T	T04	F1
29	U202	10,000	T	T04	F1
30	U203	10,000	T	T04	F1
31	U204	10,000	T	T04	F1
32	U205	10,000	T	T04	F1
33	U206	10,000	T	T04	F1

EPA Form 8700-23 (01-90)

Please print or type with ELITE type (12 characters per inch) in the unshaded areas only

Form Approved. OMB No. 2050-0034 Expires 12-31-91
GSA No. 0246-EPA-OT

EPA I.D. Number (enter from page 1)	Secondary ID Number (enter from page 1)
I L D 0 0 0 6 0 8 4 7 1	

XIII. Description of Hazardous Wastes (continued)

Line Number	A. EPA Hazardous Waste No. (enter code)	B. Estimated Annual Quantity of Waste	C. Unit of Measure (enter code)	D. Processes (1) Process Codes (enter)	D. Processes (2) Process Description (If a code is not entered in D(1))
1	U 2 0 7	10,000	T	T 0 4	F1
2	U 2 0 8	10,000	T	T 0 4	F1
3	U 2 0 9	10,000	T	T 0 4	F1
4	U 2 1 0	10,000	T	T 0 4	F1
5	U 2 1 1	10,000	T	T 0 4	F1
6	U 2 1 3	10,000	T	T 0 4	F1
7	U 2 1 4	10,000	T	T 0 4	F1
8	U 2 1 5	10,000	T	T 0 4	F1
9	U 2 1 6	10,000	T	T 0 4	F1
10	U 2 1 7	10,000	T	T 0 4	F1
11	U 2 1 8	10,000	T	T 0 4	F1
12	U 2 1 9	10,000	T	T 0 4	F1
13	U 2 2 0	10,000	T	T 0 4	F1
14	U 2 2 1	10,000	T	T 0 4	F1
15	U 2 2 2	10,000	T	T 0 4	F1
16	U 2 2 3	10,000	T	T 0 4	F1
17	U 2 2 5	10,000	T	T 0 4	F1
18	U 2 2 6	10,000	T	T 0 4	F1
19	U 2 2 7	10,000	T	T 0 4	F1
20	U 2 2 8	10,000	T	T 0 4	F1
21	U 2 3 4	10,000	T	T 0 4	F1
22	U 2 3 5	10,000	T	T 0 4	F1
23	U 2 3 6	10,000	T	T 0 4	F1
24	U 2 3 7	10,000	T	T 0 4	F1
25	U 2 3 8	10,000	T	T 0 4	F1
26	U 2 3 9	10,000	T	T 0 4	F1
27	U 2 4 0	10,000	T	T 0 4	F1
28	U 2 4 3	10,000	T	T 0 4	F1
29	U 2 4 4	10,000	T	T 0 4	F1
30	U 2 4 6	10,000	T	T 0 4	F1
31	U 2 4 7	10,000	T	T 0 4	F1
32	U 2 4 8	10,000	T	T 0 4	F1
33	U 2 4 9	10,000	T	T 0 4	F1

EPA Form 8700-23 (01-90)

Please print or type with ELITE type (12 characters per inch) in the unshaded areas only

Form Approved. OMB No. 2050-0034 Expires 12-31-91
GSA No. 0246-EPA-OT

EPA I.D. Number (enter from page 1)	Secondary ID Number (enter from page 1)
ILD000608471	

XIII. Description of Hazardous Wastes (continued)

Line Number	A. EPA Hazardous Waste No. (enter code)	B. Estimated Annual Quantity of Waste	C. Unit of Measure (enter code)	D. Processes (1) Process Codes (enter)	D. Processes (2) Process Description (If a code is not entered in D(1))
01	U328	10,000	T	T04	F1
02	U353	10,000	T	T04	F1
03	U359	10,000	T	T04	F1
04	P001	10,000	T	T04	F1
05	P002	10,000	T	T04	F1
06	P003	10,000	T	T04	F1
07	P004	10,000	T	T04	F1
08	P005	10,000	T	T04	F1
09	P006	10,000	T	T04	F1
10	P007	10,000	T	T04	F1
11	P008	10,000	T	T04	F1
12	P009	10,000	T	T04	F1
13	P010	10,000	T	T04	F1
14	P011	10,000	T	T04	F1
15	P012	10,000	T	T04	F1
16	P013	10,000	T	T04	F1
17	P014	10,000	T	T04	F1
18	P015	10,000	T	T04	F1
19	P016	10,000	T	T04	F1
20	P017	10,000	T	T04	F1
21	P018	10,000	T	T04	F1
22	P020	10,000	T	T04	F1
23	P021	10,000	T	T04	F1
24	P022	10,000	T	T04	F1
25	P023	10,000	T	T04	F1
26	P024	10,000	T	T04	F1
27	P026	10,000	T	T04	F1
28	P027	10,000	T	T04	F1
29	P028	10,000	T	T04	F1
30	P029	10,000	T	T04	F1
31	P030	10,000	T	T04	F1
32	P031	10,000	T	T04	F1
33	P033	10,000	T	T04	F1

EPA Form 8700-23 (01-90)

Please print or type with ELITE type (12 characters per inch) in the unshaded areas only

Form Approved. OMB No. 2050-0034 Expires 12-31-91
GSA No. 0246-EPA-OT

EPA I.D. Number (enter from page 1)	Secondary ID Number (enter from page 1)
I L D 0 0 0 6 0 8 4 7 1	

XIV. Description of Hazardous Wastes (continued)

Line Number	A. EPA Hazardous Waste No. (enter code)	B. Estimated Annual Quantity of Waste	C. Unit of Measure (enter code)	D. Processes (1) Process Codes (enter)	D. Processes (2) Process Description (If a code is not entered in D(1))
11	P 0 3 4	10,000	T	T 0 4	F1
12	P 0 3 6	10,000	T	T 0 4	F1
13	P 0 3 7	10,000	T	T 0 4	F1
14	P 0 3 8	10,000	T	T 0 4	F1
15	P 0 3 9	10,000	T	T 0 4	F1
16	P 0 4 0	10,000	T	T 0 4	F1
17	P 0 4 1	10,000	T	T 0 4	F1
18	P 0 4 2	10,000	T	T 0 4	F1
19	P 0 4 3	10,000	T	T 0 4	F1
10	P 0 4 4	10,000	T	T 0 4	F1
11	P 0 4 5	10,000	T	T 0 4	F1
12	P 0 4 6	10,000	T	T 0 4	F1
13	P 0 4 7	10,000	T	T 0 4	F1
14	P 0 4 8	10,000	T	T 0 4	F1
15	P 0 4 9	10,000	T	T 0 4	F1
16	P 0 5 0	10,000	T	T 0 4	F1
17	P 0 5 1	10,000	T	T 0 4	F1
18	P 0 5 4	10,000	T	T 0 4	F1
19	P 0 5 6	10,000	T	T 0 4	F1
20	P 0 5 7	10,000	T	T 0 4	F1
21	P 0 5 8	10,000	T	T 0 4	F1
22	P 0 5 9	10,000	T	T 0 4	F1
23	P 0 6 0	10,000	T	T 0 4	F1
24	P 0 6 2	10,000	T	T 0 4	F1
25	P 0 6 3	10,000	T	T 0 4	F1
26	P 0 6 4	10,000	T	T 0 4	F1
27	P 0 6 5	10,000	T	T 0 4	F1
28	P 0 6 6	10,000	T	T 0 4	F1
29	P 0 6 7	10,000	T	T 0 4	F1
30	P 0 6 8	10,000	T	T 0 4	F1
31	P 0 6 9	10,000	T	T 0 4	F1
32	P 0 7 0	10,000	T	T 0 4	F1
33	P 0 7 1	10,000	T	T 0 4	F1

Please print or type with ELITE type (12 characters per inch) in the unshaded areas only

Form Approved. OMB No. 2050-0034 Expires 12-31-91
GSA No. 0246-EPA-OT

EPA I.D. Number (enter from page 1)												Secondary ID Number (enter from page 1)
I	L	D	0	0	0	6	0	8	4	7	1	

X. Description of Hazardous Wastes (continued)

Line Number	A. EPA Hazardous Waste No. (enter code)				B. Estimated Annual Quantity of Waste	C. Unit of Measure (enter code)	D. Processes (1) Process Codes (enter)									(2) Process Description (If a code is not entered in D(1))
21	P	0	7	2	10,000	T	T	0	4							F1
22	P	0	7	3	10,000	T	T	0	4							F1
23	P	0	7	4	10,000	T	T	0	4							F1
24	P	0	7	5	10,000	T	T	0	4							F1
25	P	0	7	6	10,000	T	T	0	4							F1
26	P	0	7	7	10,000	T	T	0	4							F1
27	P	0	7	8	10,000	T	T	0	4							F1
28	P	0	8	1	10,000	T	T	0	4							F1
29	P	0	8	2	10,000	T	T	0	4							F1
30	P	0	8	4	10,000	T	T	0	4							F1
31	P	0	8	5	10,000	T	T	0	4							F1
32	P	0	8	7	10,000	T	T	0	4							F1
33	P	0	8	8	10,000	T	T	0	4							F1
34	F	0	3	2	10,000	T	T	0	4							F1
35	F	0	3	4	10,000	T	T	0	4							F1
36	F	0	3	5	10,000	T	T	0	4							F1
37	K	1	0	7	10,000	T	T	0	4							F1
38	K	1	0	8	10,000	T	T	0	4							F1
39	K	1	0	9	10,000	T	T	0	4							F1
40	K	1	1	0	10,000	T	T	0	4							F1
41	K	1	3	1	10,000	T	T	0	4							F1
42	K	1	3	2	10,000	T	T	0	4							F1
43	K	0	6	4	10,000	T	T	0	4							F1
44	K	0	6	5	10,000	T	T	0	4							F1
45	K	0	6	6	10,000	T	T	0	4							F1
46	K	0	8	8	10,000	T	T	0	4							F1
47	K	0	9	0	10,000	T	T	0	4							F1
48	K	0	9	1	10,000	T	T	0	4							F1
49	P	0	2	6	10,000	T	T	0	4							F1-INCLUDED WITH ABOVE
50																
51																
52																
53																

EPA Form 8700-23 (01-90)

Secondary ID Number (enter from page 1)

I L D 0 0 0 6 0 8 4 7 1

XIV. Description of Hazardous Waste (continued)

E. USE THIS SPACE TO LIST ADDITIONAL PROCESS CODES FROM ITEM D(1) ON PAGE 5.

Page	Line Number	Additional Process Codes (enter)																													
6A	1-33	T	0	1	T	0	4																								
6B	1-33	T	0	1	T	0	4																								
6C	1-33	T	0	1	T	0	4																								
6D	1-33	T	0	1	T	0	4																								
6E	1-25	T	0	1	T	0	4																								

XV. Map

Attach to this application a topographic map of the area extending to at least one mile beyond property boundaries. The map must show the outline of the facility, the location of each of its existing and proposed intake and discharge structures, each of its hazardous waste treatment, storage, or disposal facilities, and each well where it injects fluids underground. Include all springs, rivers and other surface water bodies in this map area. See instructions for precise requirements.

XVI. Facility Drawing

All existing facilities must include a scale drawing of the facility (see instructions for more detail).

XVII. Photographs

All existing facilities must include photographs (aerial or ground-level) that clearly delineate all existing structures; existing storage, treatment and disposal areas; and sites of future storage, treatment or disposal areas (see instructions for more detail).

XVIII. Certification(s)

I certify under penalty of law that this document and all attachments were prepared under my direction or supervision in accordance with a system designed to assure that qualified personnel properly gather and evaluate the information submitted. Based on my inquiry of the person or persons who manage the system, or those persons directly responsible for gathering the information, the information submitted is, to the best of my knowledge and belief, true, accurate, and complete. I am aware that there are significant penalties for submitting false information, including the possibility of fine and imprisonment for knowing violations.

Owner Signature	Date Signed
	January 13, 1992

Name and Official Title (type or print)

Edward Sheehan Vice President, Clean Harbors of Chicago, Inc.

Operator Signature	Date Signed

Name and Official Title (type or print)

XIX. Comments

Note: Mail completed form to the appropriate EPA Regional or State Office. (refer to instructions for more information)

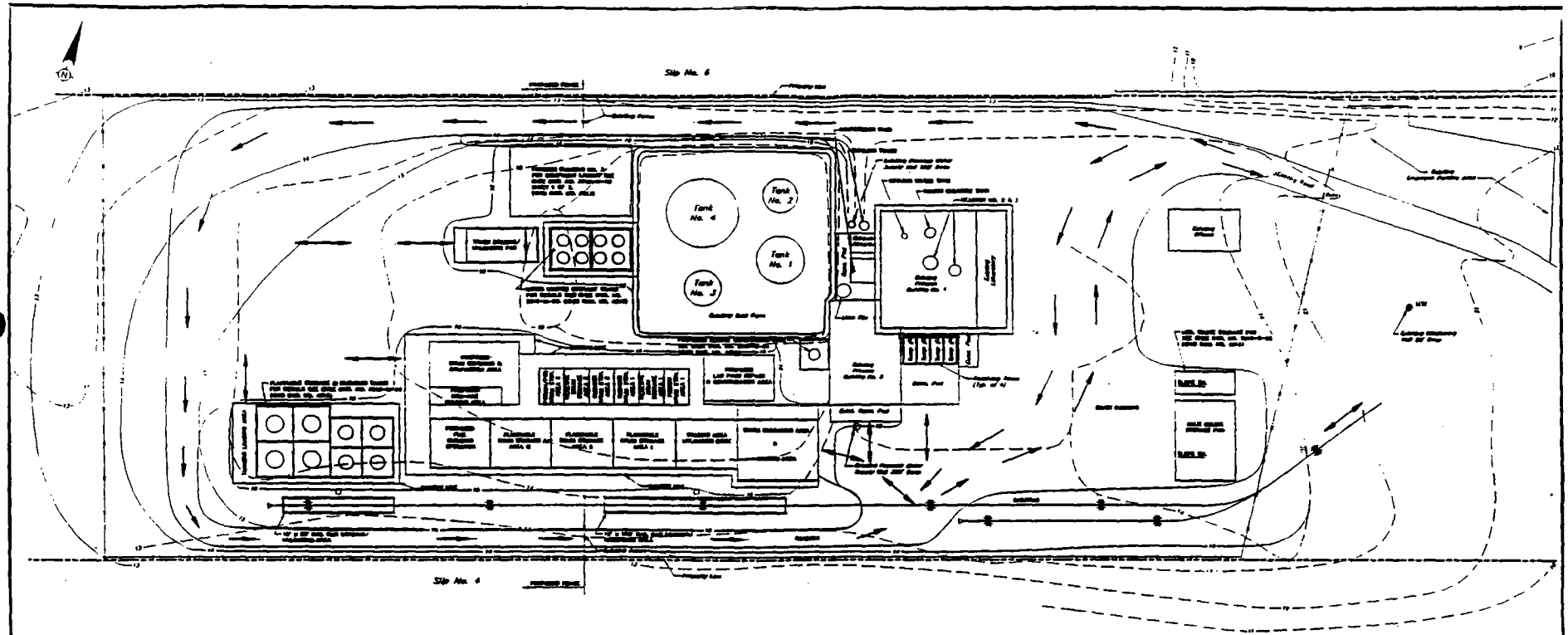

RECEIVED
JAN 21 1992
IEPA-DLPC

NOTES:

1. FOR DRUM STORAGE AREA DETAILS SEE CHEE DWG. NO. 2916-M-04. (CHCI DWG. NO. 4210)
2. FOR LAB PACK REPACK & CONSOLIDATION AREA DETAILS SEE CHEE DWG. NO. 2916-M-05. (CHCI DWG. NO. 4211)
3. FOR DRUM CRUSHING & COMPACTING AREA DETAILS SEE CHEE DWG. NO. 2916-S-06. (CHCI DWG. NO. 4212)
4. FOR DETAILS OF SECONDARY CONTAINMENT FOR RAIL CAR LOADING/UNLOADING AREA SEE CHEE DWG. NO. 2916-S-04. (CHCI DWG. NO. 4217)
5. EXISTING FACILITIES HAVE BEEN IDENTIFIED ON THIS DRAWING AND ARE SHOWN ON CHEE DWG. NO. 2916-C-04. (CHCI DWG. NO. 4203). ALL OTHER OPERATIONS & STRUCTURES SHOWN ON THIS DRAWING ARE PREVIOUSLY APPROVED BUT NOT CONSTRUCTED OR ARE PROPOSED IN THIS APPLICATION.
6. ——→ INDICATES THE TRAFFIC PATTERN ON SITE.
7. PROPOSED CONTOURS ARE TO BE DEVELOPED ALONG WITH THE PROPOSED FACILITIES.

LEGEND

— — — *Existing Contours*

——— PROPOSED CONTOURS

CHCI DWG. NO. 4204

B	RCRA PART B SUBMITTAL UPDATE				
A	RCRA PART B SUBMITTAL	K.M.C.	P.W.	P.W.	

CleanHarbors
ENVIRONMENTAL ENGINEERING, INC.

CLEAN HARBORS OF CHICAGO, INC.
11600 S. STONY ISLAND AVENUE
CHICAGO, ILLINOIS 60617

SITE PLAN
EXISTING, APPROVED AND PROPOSED FACILITIES & OPERATIONS

E-2916 | 2916-C-05

1" = 40'

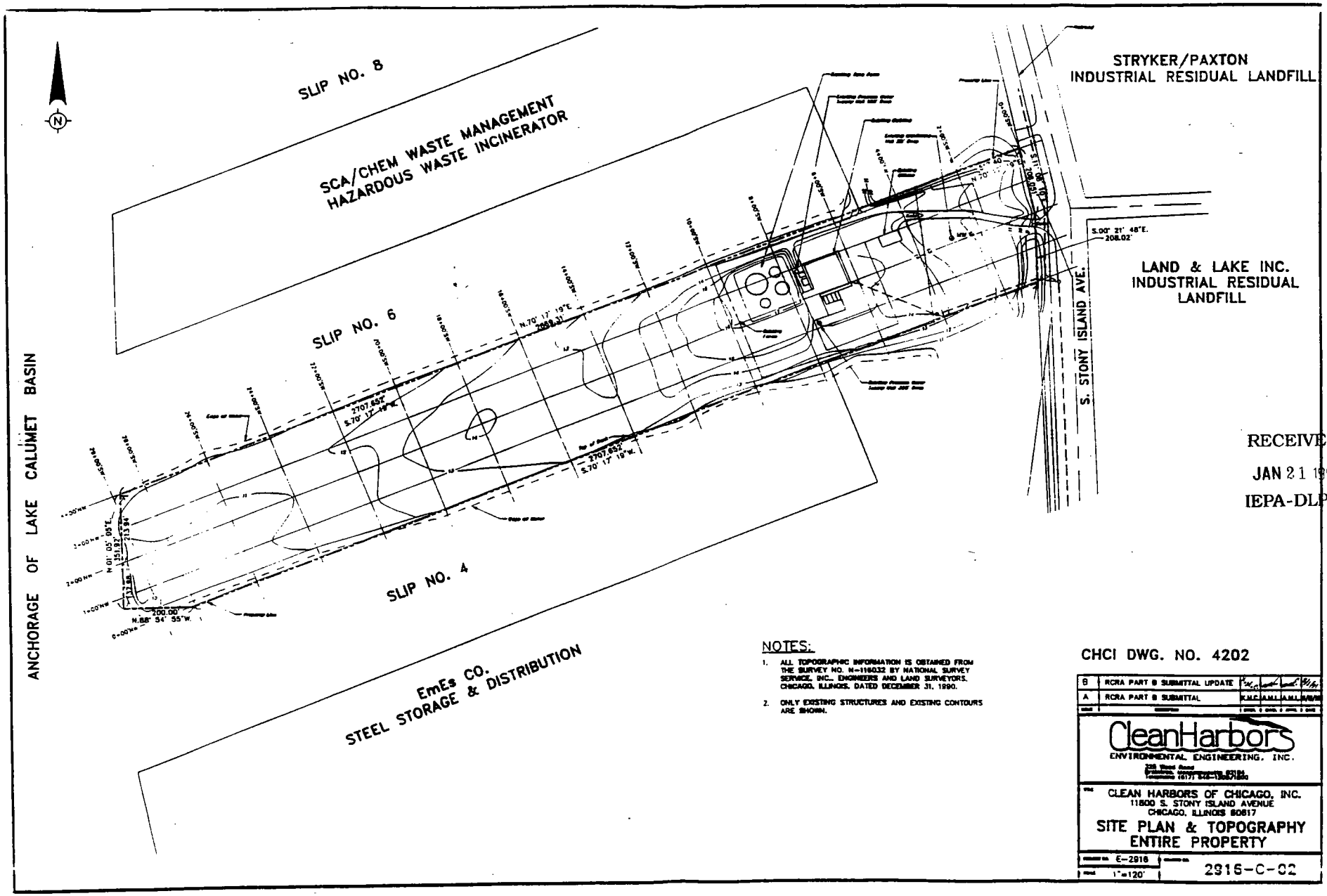

NOTES:

1. ALL TOPOGRAPHIC INFORMATION IS OBTAINED FROM THE SURVEY NO. N-116032 BY NATIONAL SURVEY SERVICE, INC., ENGINEERS AND LAND SURVEYORS, CHICAGO, ILLINOIS, DATED DECEMBER 31, 1990.
2. ONLY EXISTING STRUCTURES AND EXISTING CONTOURS ARE SHOWN.

RECEIVED
JAN 21 199?
IEPA-DLPC

CHCI DWG. NO. 4202

B	RCRA PART B SUBMITTAL UPDATE	
A	RCRA PART B SUBMITTAL	K.H.C. A.M.L. A.M.L.

CleanHarbors
ENVIRONMENTAL ENGINEERING, INC.

CLEAN HARBORS OF CHICAGO, INC.
11800 S. STONY ISLAND AVENUE
CHICAGO, ILLINOIS 60617

SITE PLAN & TOPOGRAPHY
ENTIRE PROPERTY

E-2916 | 1"=120' | 2916-C-02

Justification for Utilizing a Waste Compactor

Pursuant to Illinois EPA Hazardous Waste Regulation, Section 724.174(h), Clean Harbors of Chicago, Inc. ("Clean Harbors") is required to describe "the efforts undertaken during the year to reduce the volume and toxicity of the waste generated". The waste compactor will minimize the amount of solid hazardous and non-hazardous waste shipped to landfills (e.g. 10-55 gallon drums of contaminated tyvek suits can be compacted into 1-55 gallon drum).

CleanHarbors
OF CHICAGO, INC.
11800 S. STONY ISLAND AVENUE
CHICAGO, IL 60617
(312) 646-6202

RECEIVED
NOV 21 1991
OFFICE OF RCRA
Waste Management Division
U.S. EPA, REGION V

November 20, 1991

Mr. George Hamper
US ENVIRONMENTAL PROTECTION AGENCY
Region V
230 South Dearborn Street
Chicago, Illinois 60604

Dear Mr. Hamper:

As per our conversation of today, I am sending you a copy of the permit application submitted to IEPA for a compactor unit.

Please let me know your thoughts on this application by contacting me at 312/646-6202.

Sincerely,

CLEAN HARBORS OF CHICAGO, INC.

James R. Laubsted
Compliance Manager

Enclosure

JRL/mk

CleanHarbors
OF CHICAGO, INC.
11800 S. STONY ISLAND AVENUE
CHICAGO, IL 60617
(312) 646-6202

RECEIVED
NOV 21 1991
OFFICE OF RCRA
Waste Management Division
U.S. EPA, REGION V.

CERTIFIED MAIL - RETURN RECEIPT REQUESTED - ARTICLE #P 377 858 598

November 14, 1991

Mr. Mark Schollenberger, P.E.
Environmental Protection Engineer
Permit Section
ILLINOIS ENVIRONMENTAL PROTECTION AGENCY
Division of Land Pollution Control
P.O. Box 19276
Springfield, Illinois 6274-9276

Dear Mr. Schollenberger:

Clean Harbors of Chicago, Inc. ("Clean Harbors") is submitting a permit application for a compactor at the facility. Presently, Clean Harbors manually compacts wastes inside containers with a tamper tool. Wastes that are typically compacted include contaminated personnel protective equipment (e.g. tyvek suits, boots, gloves, etc.), filters, small containers, rags, and other solid debris.

Clean Harbors has decided to upgrade this operation by replacing the manual compaction procedure with a semi-automatic compacting device manufactured by Compaction Technologies (see enclosed literature).

Clean Harbors believes that the compaction operation is not considered "treatment" pursuant to Illinois EPA Hazardous Waste Rules, Section 720.110.

Wastes that are compacted will be identical to the waste prior to compaction, as far as the physical, biological, and the chemical composition of the waste. The waste is not neutralized, nor is energy or material resources recovered, nor is the waste rendered non-hazardous or less hazardous, nor is it rendered safer to transport, store or dispose of, nor make it more amenable for recovery, nor more amenable for storage or reduce in volume.

The "act" of compaction does <u>not</u> reduce the volume of waste, it only allows more wastes to go into a container. As an example; Clean Harbors has two (2) containers full of contaminated tyvek suits, each drum weighs 200 pounds. The two (2) drum contents are compacted into one (1) drum. The compacted waste still weighs 400 pounds.

CleanHarbors

The unit is a Compacting Technologies International CTI Pro 8560. The compactor is a movable unit which will be operated in the appropriate containment bay of the drum storage areas where the material being processed is compatible. The compaction system meets NEMA 7 Class 1, Division 1 electrical standards and meets NFPA Guidelines for hazardous atmospheres. A nitrogen purge is included to inert the system during compaction. The system also has an electronic temperature control probe and connecting dry chemical extinguisher system in case of fire. The system also includes an activated carbon adsorber for emissions during compaction. The compactor includes a drum crusher attachment which will be used to crush RCRA empty drums.

To operate the unit, a drum is placed into the barrel containment chamber which completely surrounds the drum. The unit is closed and a special pump removes liquids which are pumped to a separate container. A hydraulic ram compacts material in the drum without distorting the drum. A "quick chute", described in the literature, in utilized to load additional material without opening the chamber door. Upon completion of compaction, the drum is removed and readied for shipment off-site.

The containers crushed with the crushing attachment will be RCRA empty. The type of containers include 55 gallon and smaller drums, pails, cans, and bottles. The materials of construction include steel, plastic, and glass.

When switching from hazardous waste to non-hazardous waste, the unit will be decontaminated by removal of any waste material and a triple rinse. The rinse material would be an aqueous acid solution, aqueous alkaline solution, or organic solution that will depend on the waste material last compacted. The solution must be an appropriate decon material for the waste, and it must be compatible. Wipe tests will be performed to insure decontamination. All decon material will be handled as a hazardous waste.

The nitrogen purge system on the compactor will be used whenever materials which could volatilize are being compacted. It is estimated that the unit will be operated 50 hours per week on average, with approximately 50% of the material requiring the nitrogen purge system. Because the system uses N_2, no NOX emissions are expected during the nitrogen purge.

To prevent an odor problem during operation, the unit is equipped with an activated carbon adsorber. Clean Harbors does not intend to compact materials which are odorous. The nitrogen inerting will also control odors.

CleanHarbors

The nitrogen purge system will inert the chamber during compaction. This procedure should prevent explosions or fires in the compactor. No aerosol cans will be compacted in the unit.

To prevent volatile organic emissions from the compactor, a carbon adsorption system is used. A diagram of the system and manufacturer's data of carbon adsorption capacities for many organics are included.

The following hazardous and non-hazardous materials would be compacted in the unit: debris (mixtures of soil, wood, dirt, rocks, cardboard, PPE, absorbent materials), off-specification products, personnel protection equipment (suits, boots, gloves, garments), pharmaceuticals, filters, cartridges, absorbent socks/pillows, RCRA empty containers (bottles, jars, cans), lab vials, rags, etc. These materials could be hazardous waste.

Information on the compactor is included as an attachment. If you have any further questions on this permit application, please contact me at 312/646-6202.

Sincerely,

CLEAN HARBORS OF CHICAGO, INC.

James R. Laubsted
Compliance Manager

Enclosure

JRL/mk

Illinois Environmental Protection Agency · P.O. Box 19276, Springfield, IL 62794-9276

General Application for Permit (LPC-PA1)

This form must be used for any application for permit from the Division of Land Pollution Control, except for waste stream permits and permits for the composting of landscape waste only. Attach any necessary plans, specifications, reports, etc. to fully support and describe the activities or modifications being proposed. If necessary, attach sufficient information to demonstrate compliance with all applicable RCRA requirements.

SITE IDENTIFICATION

Name: Clean Harbors of Chcicago, INC. Site # (IEPA): 0 3 1 6 0 0 0 0 5 1

City: Chicago County: COOK

Existing DE/OP Permit Nos. (if applicable): 1980-36-OP

	OWNER	OPERATOR
Name:	CLEAN HARBORS OF CHICAGO, INC.	CLEAN HARBORS OF CHICAGO, INC.
Address:	11800 Sl Stony Island Avenue	11800 S. Stony Island Avenue
	Chicago, Illinois 60617	Chicago, Illinois 60617
Contact Name:	Joseph McNally	James R. Laubsted
Phone #:	(312) 646-6202	(312) 646-6202

TYPE SUBMISSION:		TYPE FACILITY:		TYPE WASTE:	
Developmental		Landfill		General Municipal Refuse	
Operating	X	Land Treatment		Hazardous	X
Supplemental	X	Transfer Station	X	Special (Non-Hazardous)	X
Permit Transfer		Treatment	X	Demo Debris (ex. putrescible)	
Name Change		Storage	X	Demo Debris (incl. putrescible)	
Closure/Post Closure Certification		Incinerator		Used Oil	
		Composting		Solvents	
		Recycling/Reclamation		Landscape/Yard Waste	
		Other		Other (Specify)	

DESCRIPTION OF PROJECT: (Include a brief narrative description here.)

Addition of a CTI PRO 8560 compactor

COMPLETENESS REQUIREMENTS

The following items must be submitted unless they are either not required, or have previously been approved. Any items marked "N/A" must be fully explained. For example, a treatment facility may indicate "N/A" for prior conduct certification and explain that certification is not required for treatment facilities. Please refer to the instructions for further guidance.

1. Have all public notice letters been mailed and is documentation enclosed? X Yes ___ No ___ N/A

This Agency is authorized to require this information under Ill. Rev. Stat. 1979, Chapter 111 1/2 Section 1039. Disclosure of this information is required and failure to do so may prevent this form from being processed and could result in your application being denied. This form has been approved by the Forms Management Center.

11 532 1857

2.a. Is the Siting Certification Form (LPC-PA8) completed and enclosed? ___ Yes __X__ No ___ N/A

b. Is siting approval currently under litigation? ___ Yes __X__ No ___ N/A

3. Is a closure, and if necessary a post closure, plan covering these activities being submitted, or has one already been approved? (Provide permit number !1980-36-OP.) __x__ Yes ___ No ___ N/A

4. Are financial assurance documents being submitted? ___ Yes __X__ No ___ N/A

5. Is a request for prior conduct certification for the chief operator being submitted, or is the chief operator currently certified? (Provide OC # _____ and date of certification __ __ / __ __ / __ __.) ___ Yes ___ No __X__ N/A

*CERTIFICATION NOT REQUIRED FOR TREATMENT FACILITIES.

6.a. Is land ownership held in beneficial trust? ___ Yes __X__ No ___ N/A

b. If yes, is a beneficial trust certification form (LPC-PA9) completed and enclosed? ___ Yes ___ No ___ N/A

SIGNATURES

All applications shall be signed by the person designated below or by a duly authorized representative of that person:

Corporation - By a principal executive officer of at least the level of vice-president.
Partnership or Sole Proprietorship - By a general partner or the proprietor, respectively.
Government - By either a principal executive officer or a ranking elected official.

A person is a duly authorized representative only if:

1. the authorization is made in writing by a person described above; and
2. is submitted with this application (a copy of a previously submitted authorization can be used).

I hereby affirm that all information contained in this Application is true and accurate to the best of my knowledge and belief.

Owner Signature: _____ 11/14/91 (Date)

Title: VICE-PRESIDENT

Operator Signature: _____ 11/14/91 (Date)

Title: COMPLIANCE MANAGER

Engineer Signature: _____ _____ (Date)

Engineer Name: _____ Engineer Seal:

Engineer Address: _____

Engineer Phone No.: _____

All information submitted as part of the Application is available to the public except when specifically designated by the Applicant to be treated confidentially as a trade secret or secret process in accordance with Section 7(a) of the Environmental Protection Act, applicable Rules and Regulations of the Illinois Pollution Control Board and applicable Agency rules and guidelines.

LWE:tk:5/11/49-6(10/25/89)

Printed on Recycled Paper

CTI "PRO"
WASTE PACKAGING SYSTEM

HOW IT WORKS:

1

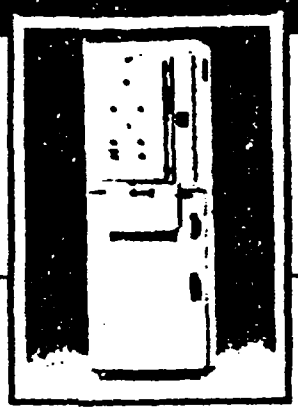

The CTI "PRO" is safe and simple to operate. The fully enclosed, microprocessor controlled system provides the industry's best volume reduction ratios.

2

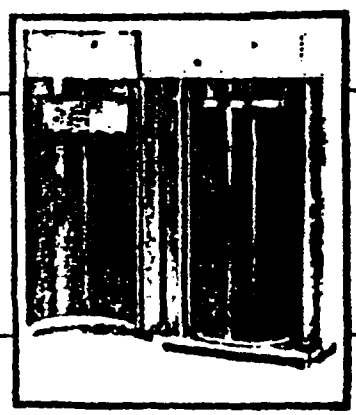

The patented barrel containment chamber completely surrounds and supports the barrel (top, bottom and sides), preventing any distortion.

3

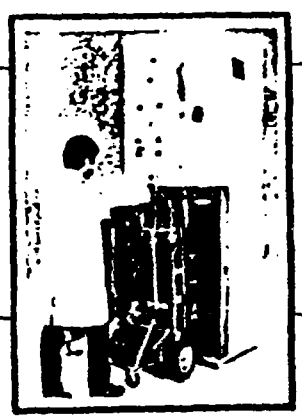

The CTI "PRO" allows compaction into steel, fibre or poly/plastic barrels (5 gallon to 85 gallon).

4

The exclusive "Quick Chute," allows waste loading without opening the chamber door.

5

Simple one touch operation starts the compaction cycle, while system indicator lights show the status of other machine functions. Quality design and engineering ensures operator safety at all times.

6

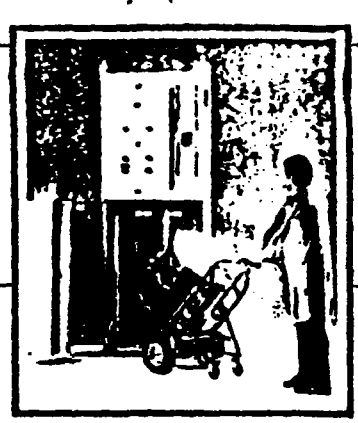

Barrel loading and removal is made safe and easy with the "Safety Hand Truck." The unique braking system and 1,000 lb. capacity enable it to handle virtually any load.

COMPACTION TECHNOLOGIES INC.

2417 N.W. Thurman, Portland, OR U.S.A. 97210
1-800-727-2067 (503) 228-0719 FAX (503) 228-0873

DMPACTOR

Your Disposal Costs

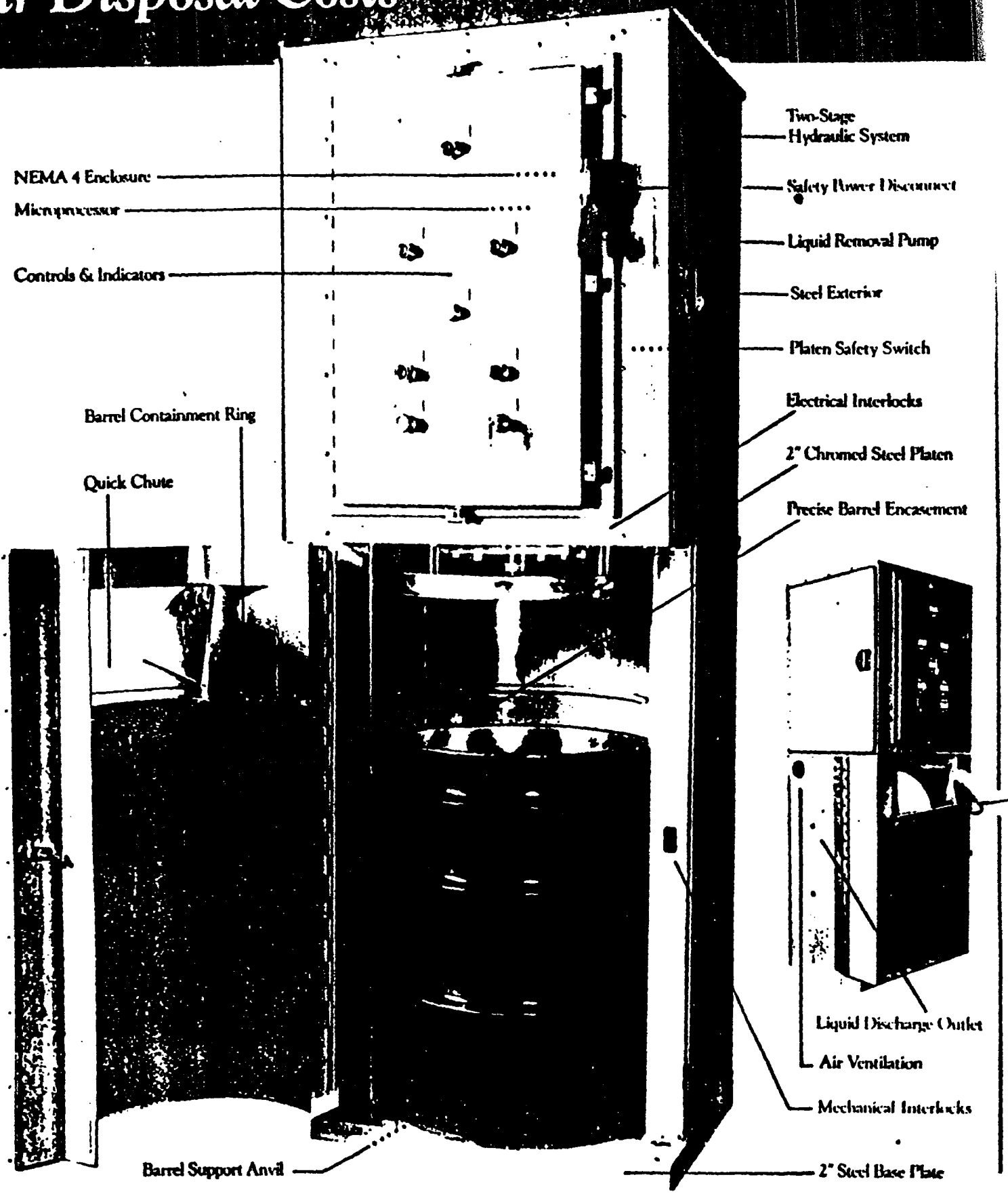

SPECIFICATIONS

(Based on the CTI "PRO"—8500 Series)

Height: 96"
Width: 34"
Depth: 34"
Weight: 2,800 lbs. (approx.)
Capacity: 55 gallon barrel
Compaction Force: Up to 85,000 lbs.

Electric Motor: 2.0 hp (TEFC)
Electrical Service: Voltage available for most types of service.
Normal Operating Sound Level: 55 dbs.
Hydraulic Fluid: 10 gallons
Warranty: 1 year limited

APPLICATIONS

- Industrial Processing Plants
- Energy Production Facilities
- Hospitals and Clinics
- Government Applications
- High-Tech and Electronics
- Treatment Storage and Disposal Facilities (TSDF)
- Recycling and Maritime Operations
- Research and Development Facilities

COMPACTION RATIOS

Uncompacted Waste (barrels): CTI "PRO" 8500 compacted waste (barrel)

WASTE TYPE	COMPACTION RATIO RANGES
Absorbent Socks/Pillows	3:1 - 6:1
Oil Filters, cartridge type	3:1 - 8:1
Paint Booth Air Filters	4:1 - 10:1
Glass Laboratory Vials	5:1 - 12:1
Shop Rags, cloth	6:1 - 14:1
Lab Garments, booties/gloves/plastics/etc.	6:1 - 14:1
Metal Buckets, 5 gal.	5:1 - 14:1
Aluminum Containers	8:1 - 20:1
Wiping Towels, paper	20:1 - 25:1

Data collected from CTI manufacturing facility and field results of current users. All ratios are approximate.

COMPACTING TECHNOLOGIES INTERNATIONAL

TOP VIEW - DOOR OPEN

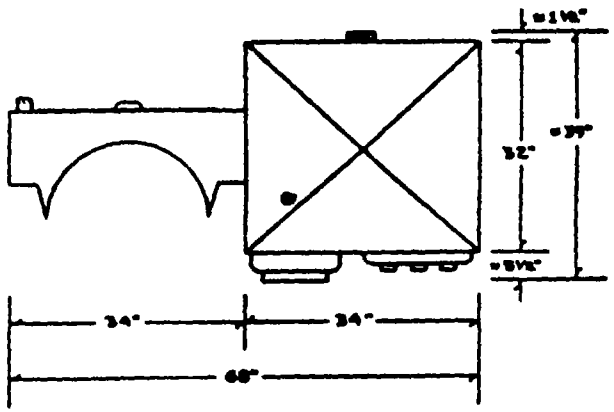

COMPACTOR ELECTRICAL CONTROLS, INDICATORS & SENSORS		
REF #	DESCRIPTION	TYPE
A	CONTROL PWR "OFF-ON"	2 POS. KEY OPERATED SELECTOR SWITCH
B	AUTO STOP	MUSHROOM HEAD PUSH BUTTON-RED
C	CONTROL PWR INDICATOR	RED LIGHT
D	AUTO START	ILLUMINATED PUSH BUTTON-GREEN
E	DOOR CLOSED INDICATOR	WHITE LIGHT
F	RAM UP INDICATOR	BLUE LIGHT
G	RAM DOWN INDICATOR	BLUE LIGHT
H	BARREL FULL INDICATOR	FLASHING AMBER LIGHT
I	RAM "UP-DOWN"	3 POS. SELECTOR SWITCH
J	MAIN CIRCUIT BREAKER	LEVER HANDLE "ON-OFF/RESET"
K	DOOR SENSOR (LS-5)	PROXIMITY SWITCH
L	CYCLE "WET-DRY"	2 POS. SELECTOR SWITCH ⚠
M	SUCTION PUMP TEST	PUSH BUTTON-BLUE ⚠
N	HYD. MOTOR STARTER RESET	PUSH BUTTON

FRONT VIEW - DOOR OPEN

LEFT SIDE VIEW - DOOR CLOSED

BACK VIEW - DOOR CLOSED

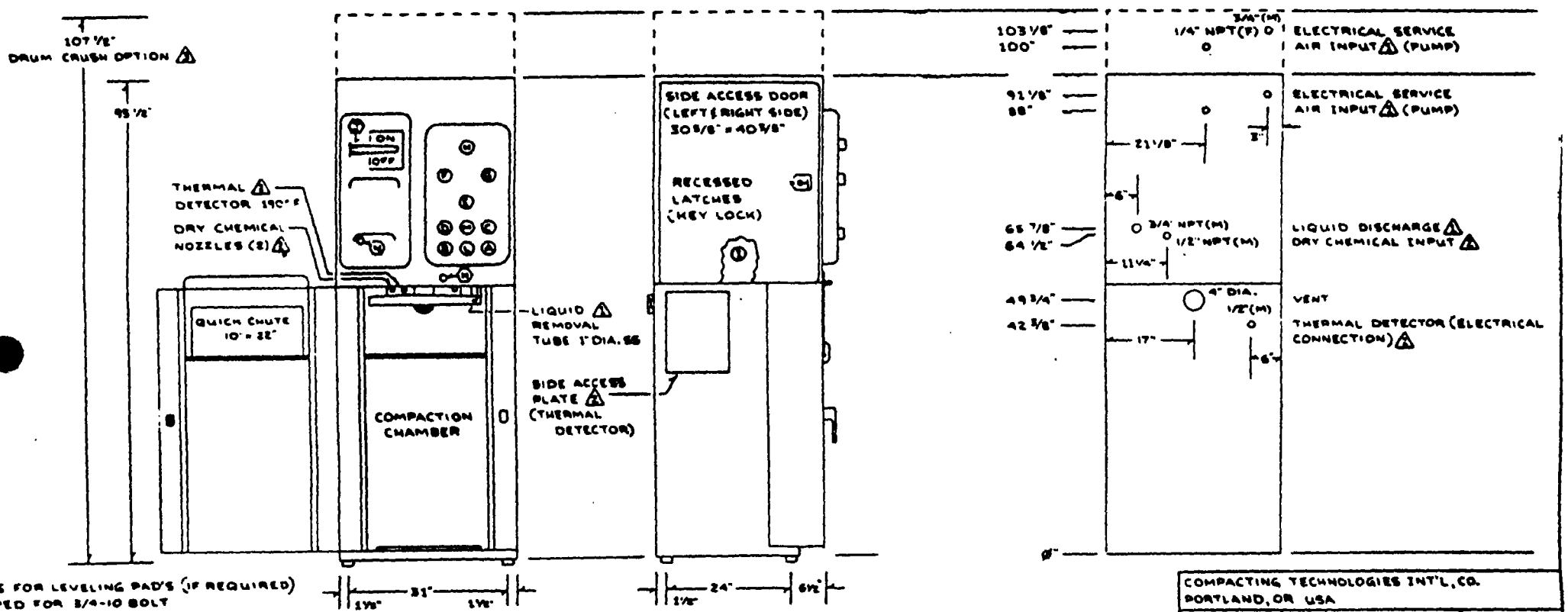

DIM'S FOR LEVELING PAD'S (IF REQUIRED) TAPPED FOR 3/4-10 BOLT

OPTIONS: ⚠ LIQUID REMOVAL SYSTEM
⚠ F RE EXTINGUISHER SYSTEM CONNECTION
⚠ DRUM CRUSH
⚠ HEPA FILTER (NOT SHOWN)

COMPACTING TECHNOLOGIES INTERNATIONAL

COMPACTING TECHNOLOGIES INT'L, CO.
PORTLAND, OR USA

DATE 7-17-90	APPROVED BY	DRAWN BY HE
CTI PRO COMPACTOR - ELECTRICAL CONTROL & COMPONENT ILLUSTRATION		
NEMA 7 PRO SERIES		CTI-1782

CARBTROL

Air Purification Systems

75 to 450 CFM 1000 CFM

FEATURES

- Activated carbon adsorber and blower combined in factory-assembled package.
- Supplied complete. Only requirement is power connection.
- Provided in the following capacities: 75, 125, 300, 450, 1000 and 2000 CFM.
- Blower on discharge side of adsorber. Vacuum operation eliminates VOC leaks.
- Regeneration of spent carbon available. Canisters have D.O.T. rating for transport.
- Systems up to 450 CFM maintained in stock to meet emergency needs.

COMPONENTS

- 75 to 450 CFM units have blowers mounted on canister.
- 1000 & 2000 CFM units have blower on separate pallet.
- Interconnecting piping and 8 feet of flexible suction hose included.
- Pallets have fork lift fittings.
- Blowers are centrifugal type, direct drive of aluminum, spark-proof construction.
- TEFC motors standard. Explosion-proof available.
- Adsorber units can be supplied in mild steel epoxy lined, or HDPE. Piping is PVC.

APPLICATIONS

- Solvent Emissions
- Drum Filling Operations
- Spray Booths
- Laboratory Hoods
- Sumps and Sewerage Wet Wells

CARBTROL®
CORPORATION

39 Riverside Avenue, Westport, CT 06880 • 1-800-242-1150 • (203) 226-5642

©COPYRIGHT 1991 CARBTROL CORPORATION—CY

TABLE 3. SUMMARY OF CARBON ADSORPTION CAPACITI

Compound	Adsorption[a] Capacity, mg/g
bis(2-Ethylhexyl) phthalate	11,300
Butylbenzyl phthalate	1,520
Heptachlor	1,220
Heptachlor epoxide	1,038
Endosulfan sulfate	686
Endrin	666
Fluoranthene	664
Aldrin	651
PCB-1232	630
beta-Endosulfan	615
Dieldrin	606
Hexachlorobenzene	450
Anthracene	376
4-Nitrobiphenyl	370
Fluorene	330
DDT	322
2-Acetylaminofluorene	318
alpha-BHC	303
Anethole*	300
3,3-Dichlorobenzidine	300
2-Chloronaphthalene	280
Phenylmercuric Acetate	270
Hexachlorobutadiene	258
gamma-BHC (lindane)	256
p-Nonylphenol	250
4-Dimethylaminoazobenzene	249
Chlordane	245
PCB-1221	242
DDE	232
Acridine yellow*	230
Benzidine dihydrochloride	220
beta-BHC	220
N-Butylphthalate	220
N-Nitrosodiphenylamine	220
Phenanthrene	215
Dimethylphenylcarbinol*	210
4-Aminobiphenyl	200
beta-Naphthol*	200
alpha-Endosulfan	194
Acenaphthene	190
4,4' Methylene-bis-(2-chloroaniline)	190
Benzo(k)fluoranthene	181
Acridine orange*	180
alpha-Naphthol	180
4,6-Dinitro-o-cresol	169
alpha-Naphthylamine	160
2,4-Dichlorophenol	157
1,2,4-Trichlorobenzene	157
2,4,6-Trichlorophenol	155
beta-Naphthylamine	150
Pentachlorophenol	150
2,4-Dinitrotoluene	146
2,6-Dinitrotoluene	145
4-Bromophenyl phenyl ether	144
p-Nitroaniline*	140
1,1-Diphenylhydrazine	135
Naphthalene	132
1-Chloro-2-nitrobenzene	130
1,2-Dichlorobenzene	129
p-Chlorometacresol	124
1,4-Dichlorobenzene	121
Benzothiazole*	120
Diphenylamine	120
Guanine*	120
Styrene	120
1,3-Dichlorobenzene	118
Acenaphthylene	115
4-Chlorophenyl phenyl ether	111
Diethyl phthalate	110

TABLE 3. SUMMARY OF CARBON ADSORPTION CAPACITIES (cont.)

Compound	Adsorption[a] Capacity, mg/g
2-Nitrophenol	99
Dimethyl phthalate	97
Hexachloroethane	97
Chlorobenzene	91
p-Xylene	85
2,4-Dimethylphenol	78
4-Nitrophenol	76
Acetophenone	74
1,2,3,4-Tetrahydro-naphthalene	74
Adenine*	71
Dibenzo(a,h)anthracene	69
Nitrobenzene	68
3,4-Benzofluoranthene	57
1,2-Dibromo-3-chloro-propane	53
Ethylbenzene	53
2-Chlorophenol	51
Tetrachloroethene	51
o-Anisidine*	50
5 Bromouracil	44
Benzo(a)pyrene	34
2,4-Dinitrophenol	33
Isophorone	32
Trichloroethene	28
Thymine*	27
Toluene	26
5-Chlorouracil*	25
N-Nitrosodi-n-propylamine	24
bis(2-Chloroisopropyl) ether	24
Phenol	21

Compound	Adsorption[a] Capacity, mg/g
Bromoform	20
Carbon tetrachloride	11
bis(2-Chloroethoxy) methane	11
Uracil*	11
Benzo(ghi)perylene	11
1,1,2,2-Tetrachloroethane	11
1,2-Dichloropropene	8.2
Dichlorobromomethane	7.9
Cyclohexanone*	6.2
1,2-Dichloropropane	5.9
1,1,2-Trichloroethane	5.8
Trichlorofluoromethane	5.6
5-Fluorouracil*	5.5
1,1-Dichloroethylene	4.9
Dibromochloromethane	4.8
2-Chloroethyl vinyl ether	3.9
1,2-Dichloroethane	3.6
1,2-trans-Dichloroethene	3.1
Chloroform	2.6
1,1,1-Trichloroethane	2.5
1,1-Dichloroethane	1.8
Acrylonitrile	1.4
Methylene chloride	1.3
Acrolein	1.2
Cytosine*	1.1
Benzene	1.0
Ethylenediaminetetra-acetic acid	0.86
Benzoic acid	0.76
Chloroethane	0.59
N-Dimethylnitros-amine	6.8×10^{-5}

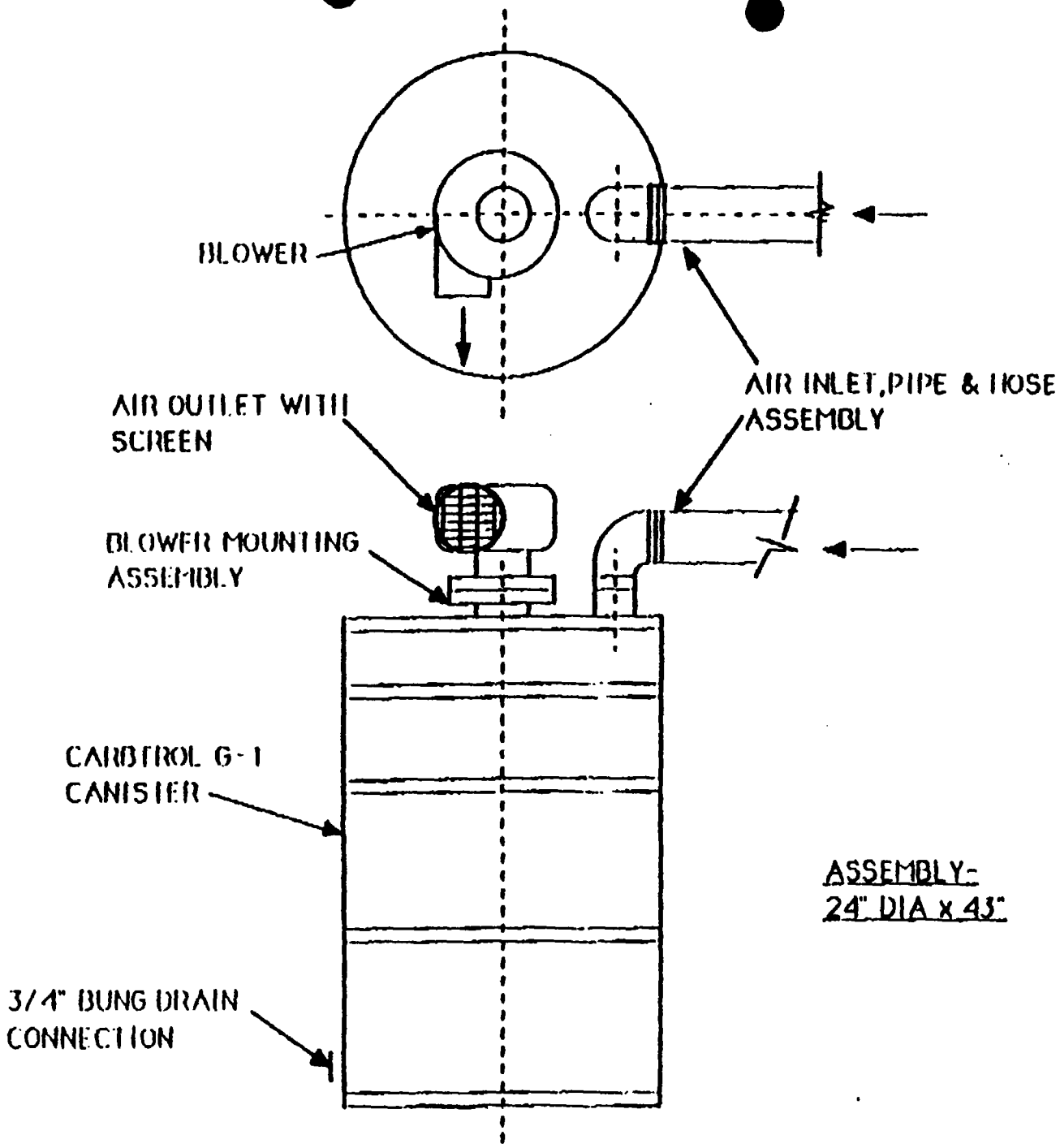

CARBTROL ® CORPORATION	39 RIVERSIDE AVENUE WESTPORT CONN. 06880 (203) 226-5642	
SCALE ----	PN-00200	BY WF
DATE 11-29-81		REV 3-22-91
G-1B-75 AIR PURIFICATION SYSTEM		
ARRANGEMENT	S	DWG 1123/1

CARBTROL

Air Purification Systems

ARRANGEMENT

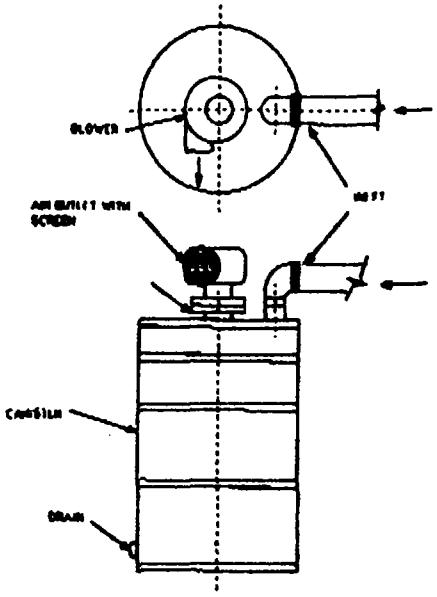

75 CFM SYSTEM

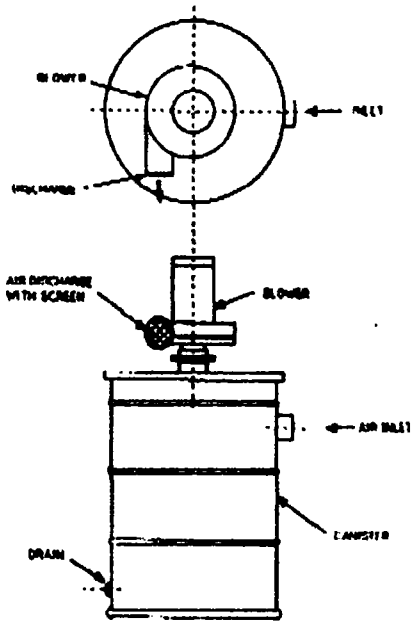

125, 300, 450 CFM SYSTEM

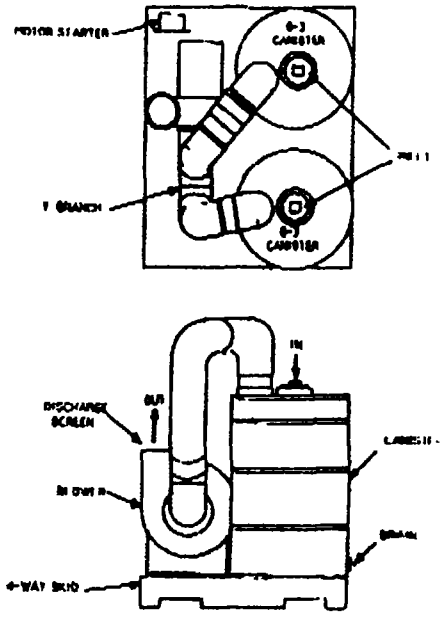

1000 CFM SYSTEM

SPECIFICATIONS

Model	G1B75	G2B125	G2B300	G3B450	G3B1000
Capacity (CFM)	75	125	300	450	1000
Carbon-Lbs./Canister	200	170	170	140	140
Number Canisters/System	1	1	1	1	2
Horsepower	1/12	1/3	1/2	3/4	3
Power Supply-Phase	1	1	1	1	3
Starter	None-SJ Cord & Plug	None-SJ Cord & Plug	Manual Motor Mtg.	Manual Motor Mtg.	Manual Motor Mtg.
Suction Hose	2½"	4⅝"	4⅝"	4⅝"	7"
Dimensions	24"D x 43"H	24"D x 56"H	24"D x 56"H	24"D x 56"H	4'Sq. x 51"H

CARBTROL® CORPORATION

39 Riverside Avenue, Westport, CT 06880 • 1-800-242-1150 • (203) 226-5642

CleanHarbors
ENVIRONMENTAL SERVICES COMPANIES
1200 CROWN COLONY DRIVE
P.O. BOX 9137
QUINCY, MA 02269
(617) 849-1800

Certified Mail - Return Receipt Requested

April 23, 1990

RECEIVED
APR 26 1990
OFFICE OF RCRA
WASTE MANAGEMENT DIVISION
EPA, REGION V

US Environmental Protection Agency
Region V
Waste Management Division - RCRA Activities
P.O. Box A3587
Chicago, IL 60604

Re: Clean Harbors of Chicago, Inc.
11800 S. Stony Island Avenue, Chicago, IL
EPA ID No.: ILD000608471

AMENDED RCRA PART A APPLICATION
ADDITION OF WASTE CODES D018 THROUGH D043

Dear Sir or Madam:

Pursuant to 40 CFR 270.72, enclosed please find an amended RCRA Part A permit application for the above-referenced facility. The Part A form has been revised to include the newly-identified Toxicity Characteristic constituents (Waste Codes D018 through D043), pursuant to 40 CFR 262.24 [Refer to 55 FR 11798, dated March 29, 1990].

Please note that in accordance with the notification requirements of the new rule, a copy of this Part A has been submitted to the Illinois EPA under separate cover.

If you have any questions regarding this submittal, please do not hesitate to contact me at (617)849-1800, extension 4473.

Sincerely,

Paul A. Ahearn

RECEIVED
APR 27 1990
U. S. EPA, REGION V
SWB — PMS

Paul A. Ahearn
Compliance Project Manager

cc: Steve Pozner
Jim Laubsted

Please print or type in the unshaded areas only
(fill-in areas are spaced for elite type, i.e., 12 characters/inch).

Form Approved OMB No. 158-R0175

FORM 1 GENERAL

U.S. ENVIRONMENTAL PROTECTION AGENCY

GENERAL INFORMATION

Consolidated Permits Program

(Read the "General Instructions" before starting.)

EPA I.D. NUMBER: F I L D 0 0 0 6 0 8 4 7 1

LABEL ITEMS

I. EPA I.D. NUMBER

III. FACILITY NAME

V. FACILITY MAILING ADDRESS

VI. FACILITY LOCATION

PLEASE PLACE LABEL IN THIS SPACE

GENERAL INSTRUCTIONS

If a preprinted label has been provided, affix it in the designated space. Review the information carefully; if any of it is incorrect, cross through it and enter the correct data in the appropriate fill-in area below. Also, if any of the preprinted data is absent (the area to the left of the label space lists the information that should appear), please provide it in the proper fill-in area(s) below. If the label is complete and correct, you need not complete Items I, III, V, and VI (except VI-B which must be completed regardless). Complete Items II and IV regardless. If no label has been provided, refer to the instructions for detailed item descriptions and for the legal authorizations under which this data is collected.

II. POLLUTANT CHARACTERISTICS

INSTRUCTIONS: Complete A through J to determine whether you need to submit any permit application forms to the EPA. If you answer "yes" to any questions, you must submit this form and the supplemental form listed in the parenthesis following the question. Mark "X" in the box in the third column if the supplemental form is attached. If you answer "no" to each question, you need not submit any of these forms. You may answer "no" if your activity is excluded from permit requirements; see Section C of the instructions. See also, Section D of the instructions for definitions of bold-faced terms.

SPECIFIC QUESTIONS	MARK 'X' YES	NO	FORM ATTACHED	SPECIFIC QUESTIONS	MARK 'X' YES	NO	FORM ATTACHED
A. Is this facility a publicly owned treatment works which results in a discharge to waters of the U.S.? (FORM 2A)		X		B. Does or will this facility (either existing or proposed) include a concentrated animal feeding operation or aquatic animal production facility which results in a discharge to waters of the U.S.? (FORM 2B)		X	
C. Is this a facility which currently results in discharges to waters of the U.S. other than those described in A or B above? (FORM 2C)		X		D. Is this a proposed facility (other than those described in A or B above) which will result in a discharge to waters of the U.S.? (FORM 2D)		X	
E. Does or will this facility treat, store, or dispose of hazardous wastes? (FORM 3)	X		X	F. Do you or will you inject at this facility industrial or municipal effluent below the lowermost stratum containing, within one-quarter mile of the well bore, underground sources of drinking water? (FORM 4)		X	
G. Do you or will you inject at this facility any produced water or other fluids which are brought to the surface in connection with conventional oil or natural gas production, inject fluids used for enhanced recovery of oil or natural gas, or inject fluids for storage of liquid hydrocarbons? (FORM 4)		X		H. Do you or will you inject at this facility fluids for special processes such as mining of sulfur by the Frasch process, solution mining of minerals, in situ combustion of fossil fuel, or recovery of geothermal energy? (FORM 4)		X	
I. Is this facility a proposed stationary source which is one of the 28 industrial categories listed in the instructions and which will potentially emit 100 tons per year of any air pollutant regulated under the Clean Air Act and may affect or be located in an attainment area? (FORM 5)		X		J. Is this facility a proposed stationary source which is NOT one of the 28 industrial categories listed in the instructions and which will potentially emit 250 tons per year of any air pollutant regulated under the Clean Air Act and may affect or be located in an attainment area? (FORM 5)		X	

III. NAME OF FACILITY

1 SKIP CLEAN HARBORS OF CHICAGO INC.

IV. FACILITY CONTACT

A. NAME & TITLE (last, first, & title)	B. PHONE (area code & no.)
2 LAUBSTED JAMES COMPLIANCE MGR	312 646 6202

V. FACILITY MAILING ADDRESS

A. STREET OR P.O. BOX

3 1180 S. STONY ISLAND AVENUE

B. CITY OR TOWN	C. STATE	D. ZIP CODE
4 CHICAGO	IL	60617

VI. FACILITY LOCATION

A. STREET, ROUTE NO. OR OTHER SPECIFIC IDENTIFIER

5 1180 S. STONY ISLAND AVENUE

B. COUNTY NAME

COOK

C. CITY OR TOWN	D. STATE	E. ZIP CODE	F. COUNTY CODE (if known)
6 CHICAGO	IL	60617	

CONTINUED FROM THE FRONT

I. SIC CODES (4-digits in order of priority)

A. FIRST	B. SECOND
4953 (specify) Refuse Collection	C 7 (specify) Part B. Section A4
C. THIRD	**D. FOURTH**
(specify)	C 7 (specify)

II. OPERATOR INFORMATION

A. NAME: CLEAN HARBORS OF CHICAGO INC.

B. Is the name listed in Item VIII-A also the owner? ☐ YES ☒ NO

C. STATUS OF OPERATOR (Enter the appropriate letter into the answer box; if "Other", specify.)
F = FEDERAL
S = STATE
P = PRIVATE
M = PUBLIC (other than federal or state)
O = OTHER (specify)

D. PHONE (area code & no.): A 215 687 8990

E. STREET OR P.O. BOX: 11800 SOUTH STONY ISLAND AVE

F. CITY OR TOWN: CHICAGO

G. STATE: IL

H. ZIP CODE: 60617

IX. INDIAN LAND

Is the facility located on Indian lands? ☐ YES ☒ NO

EXISTING ENVIRONMENTAL PERMITS

A. NPDES (Discharges to Surface Water)	N	D. PSD (Air Emissions from Proposed Sources)	C T P 03160BTE
B. UIC (Underground Injection of Fluids)	U	E. OTHER (specify)	C T 9 1980-36-OP (specify) Land (Operations)
C. RCRA (Hazardous Wastes)	R	E. OTHER (specify)	C T 9 1984-EP-0889 (specify) Land (Operations)

I. MAP

Attach to this application a topographic map of the area extending to at least one mile beyond property boundaries. The map must show the outline of the facility, the location of each of its existing and proposed intake and discharge structures, each of its hazardous waste treatment, storage, or disposal facilities, and each well where it injects fluids underground. Include all springs, rivers and other surface water bodies in the map area. See instructions for precise requirements.

I. NATURE OF BUSINESS (provide a brief description)

Clean Harbors of Chicago, Inc. offers a liquid industrial waste pretreatment service. Clean Harbors takes in hazardous and non-hazardous wastewaters which do not meet sewer discharge specifications. Through physical and chemical treatment, Clean Harbors produces an effluent acceptable for sewer discharge and a dewatered sludge. The effluent is discharg into the Metropolitan Sanitary District of Greater Chicago sewer system and the sludge is disposed of in an off-site hazardous waste landfill. The Chicago facility also accepts hazardous and non-hazardous waste in containers for storage and transfer to off-site properl licensed facilities.

II. CERTIFICATION (see instructions)

I certify under penalty of law that I have personally examined and am familiar with the information submitted in this application and all attachments and that, based on my inquiry of those persons immediately responsible for obtaining the information contained in the application, I believe that the information is true, accurate and complete. I am aware that there are significant penalties for submitting false information, including the possibility of fine and imprisonment.

NAME & OFFICIAL TITLE (type or print)	B. SIGNATURE	C. DATE SIGNED
Michael R. Hatch, President		4/23/90

COMMENTS FOR OFFICIAL USE ONLY

Please print or type in the unshaded areas only
(fill-in areas are spaced for elite type, i.e., 12 characters/inch).

Form Approved OMB No. 158-S80004

FORM 3 RCRA

EPA

U.S. ENVIRONMENTAL PROTECTION AGENCY

HAZARDOUS WASTE PERMIT APPLICATION

Consolidated Permits Program

(This information is required under Section 3005 of RCRA.)

EPA I.D. NUMBER: F ILD000608471 (T/A: 1)

FOR OFFICIAL USE ONLY

APPLICATION APPROVED	DATE RECEIVED (yr., mo., & day)	COMMENTS
		Part B Section A-1 ILD000608471

II. FIRST OR REVISED APPLICATION

Place an "X" in the appropriate box in A or B below *(mark one box only)* to indicate whether this is the first application you are submitting for your facility or a revised application. If this is your first application and you already know your facility's EPA I.D. Number, or if this is a revised application, enter your facility's EPA I.D. Number in Item I above.

A. FIRST APPLICATION *(place an "X" below and provide the appropriate date)*

[X] 1. EXISTING FACILITY *(See instructions for definition of "existing" facility. Complete item below.)*

C 8 — FOR EXISTING FACILITIES, PROVIDE THE DATE *(yr., mo., & day)* OPERATION BEGAN OR THE DATE CONSTRUCTION COMMENCED *(use the boxes to the left)* — YR. / MO. / DAY

[ ] 2. NEW FACILITY *(Complete item below.)*

FOR NEW FACILITIES, PROVIDE THE DATE *(yr., mo., & day)* OPERATION BEGAN OR IS EXPECTED TO BEGIN — YR. / MO. / DAY

B. REVISED APPLICATION *(place an "X" below and complete Item I above)*

[ ] 1. FACILITY HAS INTERIM STATUS

[ ] 2. FACILITY HAS A RCRA PERMIT

III. PROCESSES – CODES AND DESIGN CAPACITIES

A. PROCESS CODE – Enter the code from the list of process codes below that best describes each process to be used at the facility. Ten lines are provided for entering codes. If more lines are needed, enter the code(s) in the space provided. If a process will be used that is not included in the list of codes below, then describe the process *(including its design capacity)* in the space provided on the form *(Item III-C)*.

B. PROCESS DESIGN CAPACITY – For each code entered in column A enter the capacity of the process.

1. AMOUNT – Enter the amount.
2. UNIT OF MEASURE – For each amount entered in column B(1), enter the code from the list of unit measure codes below that describes the unit of measure used. Only the units of measure that are listed below should be used.

PROCESS	PROCESS CODE	APPROPRIATE UNITS OF MEASURE FOR PROCESS DESIGN CAPACITY
Storage:		
CONTAINER *(barrel, drum, etc.)*	S01	GALLONS OR LITERS
TANK	S02	GALLONS OR LITERS
WASTE PILE	S03	CUBIC YARDS OR CUBIC METERS
SURFACE IMPOUNDMENT	S04	GALLONS OR LITERS
Disposal:		
INJECTION WELL	D79	GALLONS OR LITERS
LANDFILL	D80	ACRE-FEET *(the volume that would cover one acre to a depth of one foot)* OR HECTARE-METER
LAND APPLICATION	D81	ACRES OR HECTARES
OCEAN DISPOSAL	D82	GALLONS PER DAY OR LITERS PER DAY
SURFACE IMPOUNDMENT	D83	GALLONS OR LITERS

PROCESS	PROCESS CODE	APPROPRIATE UNITS OF MEASURE FOR PROCESS DESIGN CAPACITY
Treatment:		
TANK	T01	GALLONS PER DAY OR LITERS PER DAY
SURFACE IMPOUNDMENT	T02	GALLONS PER DAY OR LITERS PER DAY
INCINERATOR	T03	TONS PER HOUR OR METRIC TONS PER HOUR; GALLONS PER HOUR OR LITERS PER HOUR
OTHER *(Use for physical, chemical, thermal or biological treatment processes not occurring in tanks, surface impoundments or incinerators. Describe the processes in the space provided; Item III-C.)*	T04	GALLONS PER DAY OR LITERS PER DAY

UNIT OF MEASURE	UNIT OF MEASURE CODE	UNIT OF MEASURE	UNIT OF MEASURE CODE	UNIT OF MEASURE	UNIT OF MEASURE CODE
GALLONS	G	LITERS PER DAY	V	ACRE-FEET	A
LITERS	L	TONS PER HOUR	D	HECTARE-METER	F
CUBIC YARDS	Y	METRIC TONS PER HOUR	W	ACRES	B
CUBIC METERS	C	GALLONS PER HOUR	E	HECTARES	Q
GALLONS PER DAY	U	LITERS PER HOUR	H		

EXAMPLE FOR COMPLETING ITEM III *(shown in line numbers X-1 and X-2 below)*: A facility has two storage tanks, one tank can hold 200 gallons and the other can hold 400 gallons. The facility also has an incinerator that can burn up to 20 gallons per hour.

C — DUP (T/A: 1)

LINE NUMBER	A. PROCESS CODE (from list above)	B. PROCESS DESIGN CAPACITY 1. AMOUNT (specify)	B. 2. UNIT OF MEASURE (enter code)	FOR OFFICIAL USE ONLY	LINE NUMBER	A. PROCESS CODE (from list above)	B. PROCESS DESIGN CAPACITY 1. AMOUNT	B. 2. UNIT OF MEASURE (enter code)	FOR OFFICIAL USE ONLY
X-1	S02	600	G		5				
X-2	T03	20	E		6				
1	S01	68,200 (55 x 1240)	G		7				
2	S02	1,128,650	G		8				
3	T01	400,000	U		9				
4	T02	100,000	U		10				

Continued from the front.

III. PROCESSES (continued)

2. SPACE FOR ADDITIONAL PROCESS CODES OR FOR DESCRIBING OTHER PROCESSES (code "T04"). FOR EACH PROCESS ENTERED HERE INCLUDE DESIGN CAPACITY.

Part B
Section A-2

T01 Physical and Chemical Treatment in Tanks

400,000 GPD

Primary Treatment -	Codes
Physical/Chemical	A1

Pretreatments

Neutralization	B1
Oxidation	B2
Reduction	B3
Oil Recovery	B4

T04 Sludge dewatering and stabilization 100,000 GPD
Dewatering of sludges following conditioning with polymer and lime, stabilization of sludges produced on-site as well as received in containers and bulk. Stabilization

S02 Storage Tanks - Includes 128,650 gallons of treatment capacity.

V. DESCRIPTION OF HAZARDOUS WASTES

EPA HAZARDOUS WASTE NUMBER — Enter the four-digit number from 40 CFR, Subpart D for each listed hazardous waste you will handle. If you handle hazardous wastes which are not listed in 40 CFR, Subpart D, enter the four-digit number(s) from 40 CFR, Subpart C that describes the characteristics and/or the toxic contaminants of those hazardous wastes.

ESTIMATED ANNUAL QUANTITY — For each listed waste entered in column A estimate the quantity of that waste that will be handled on an annual basis. For each characteristic or toxic contaminant entered in column A estimate the total annual quantity of all the non-listed waste(s) that will be handled when possess that characteristic or contaminant.

UNIT OF MEASURE — For each quantity entered in column B enter the unit of measure code. Units of measure which must be used and the appropriate codes are:

ENGLISH UNIT OF MEASURE	CODE	METRIC UNIT OF MEASURE	CODE
POUNDS	P	KILOGRAMS	K
TONS	T	METRIC TONS	M

If facility records use any other unit of measure for quantity, the units of measure must be converted into one of the required units of measure taking into account the appropriate density or specific gravity of the waste.

PROCESSES

1. PROCESS CODES:
For listed hazardous waste: For each listed hazardous waste entered in column A select the code(s) from the list of process codes contained in Item I to indicate how the waste will be stored, treated, and/or disposed of at the facility.
For non-listed hazardous wastes: For each characteristic or toxic contaminant entered in column A, select the code(s) from the list of process codes contained in Item III to indicate all the processes that will be used to store, treat, and/or dispose of all the non-listed hazardous waste that possess that characteristic or toxic contaminant.
Note: Four spaces are provided for entering process codes. If more are needed: (1) Enter the first three as described above; (2) Enter "000" in the extreme right box of Item IV-D(1); and (3) Enter in the space provided on page 4, the line number and the additional code(s).

2. PROCESS DESCRIPTION: If a code is not listed for a process that will be used, describe the process in the space provided on the form.

NOTE: HAZARDOUS WASTES DESCRIBED BY MORE THAN ONE EPA HAZARDOUS WASTE NUMBER — Hazardous wastes that can be described by more than one EPA Hazardous Waste Number shall be described on the form as follows:

1. Select one of the EPA Hazardous Waste Numbers and enter it in column A. On the same line complete columns B,C, and D by estimating the total annual quantity of the waste and describing all the processes to be used to treat, store, and/or dispose of the waste.
2. In column A of the next line enter the other EPA Hazardous Waste Number that can be used to describe the waste. In column D(2) on that line enter "Included with above" and make no other entries on that line.
3. Repeat step 2 for each other EPA Hazardous Waste Number that can be used to describe the hazardous waste.

EXAMPLE FOR COMPLETING ITEM IV (shown in line numbers X-1, X-2, X-3, and X-4 below) — A facility will treat and dispose of an estimated 900 pounds per year of chrome shavings from leather tanning and finishing operation. In addition, the facility will treat and dispose of three non-listed wastes. Two wastes are corrosive only and there will be an estimated 200 pounds per year of each waste. The other waste is corrosive and ignitable and there will be an estimated 100 pounds per year of that waste. Treatment will be in an incinerator and disposal will be in a landfill.

	A. EPA HAZARD. WASTE NO. (enter code)	B. ESTIMATED ANNUAL QUANTITY OF WASTE	C. UNIT OF MEASURE (enter code)	D. PROCESSES 1. PROCESS CODES (enter)	D. PROCESSES 2. PROCESS DESCRIPTION (if a code is not entered in D(1))
1	K054	900	P	T03 D80	
2	D002	400	P	T03 D80	
3	D001	100	P	T03 D80	
4	D002				included with above

Continued from page 2.
NOTE: Photocopy this page before completing if you have more than 26 wastes to list.

Form Approved OMB No. 158-S80004

EPA I.D. NUMBER (enter from page 1): WILD0006084711

FOR OFFICIAL USE ONLY: W DUP 2 DUP-

IV. DESCRIPTION OF HAZARDOUS WASTES (continued)

LINE NO.	A. EPA HAZARD. WASTE NO. (enter code)	B. ESTIMATED ANNUAL QUANTITY OF WASTE	C. UNIT OF MEASURE (enter code)	D. PROCESSES 1. PROCESS CODES (enter)	D. PROCESSES 2. PROCESS DESCRIPTION (if a code is not entered in D(1))
1	D001	7500	T	T01 T04 S02	A1
2	D001				B4
3	D002	40,000	T	T01 T04 S02	A1
4	D002				B1
5	D002	1500	T	T04	A2
6	D003	2000	T	T01 T04 S02	B2
7					
8	D003	400	T	T04	A2
9	D004	1000	T	T01 T04 S02	A1
10	D004				B4
11	D004	100	T	T04	A2
12	D005	200	T	T01 T04 S02	A1
13	D005				B4
14	D005	100	T	T04	A2
15	D006	1000	T	T01 T04 S02	A1
16	D006				B4
17	D006	200	T	T04	A2
18	D007	35,000	T	T01 T04 S02	A1
19	D007				B3
20	D007				B4
21	D007	1500	T	T04	A2
22	D008	4000	T	T01 T04 S02	A1
23	D008				B4
24	D008	400	T	T04	A2
25	D009	100	T	T02 T04 S02	A1
26	D009				B4

CONTINUE ON REVE

Continued from page 4.

NOTE: Photocopy this page before completing if you have more than 26 wastes to list.

Section

Form Approved OMB No. 158-S80004

EPA I.D. NUMBER (enter from page 1)	FOR OFFICIAL USE ONLY
W 1	W 1 DUP 2 DUP

IV. DESCRIPTION OF HAZARDOUS WASTES (continued)

LINE NO.	A. EPA HAZARD. WASTE NO. (enter code)	B. ESTIMATED ANNUAL QUANTITY OF WASTE	C. UNIT OF MEASURE (enter code)	D. PROCESSES 1. PROCESS CODES (enter)	D. PROCESSES 2. PROCESS DESCRIPTION (if a code is not entered in D(1))
1	D009	40	T	T04	A2
2	D010	100	T	T01 T04 S02	A1
3	D010				B4
4	D010	40	T	T04	A2
5	D011	100	T	T01 T04 S02	A1
6	D011	40	T	T04	A2
7	D012	1000	T	T01 T04 S02	A1
8	D013	1000	T	T01 T04 S02	A1
9	D014	1000	T	T01 T04 S02	A1
10	D015	1000	T	T01 T04 S02	A1
11	D016	1000	T	T01 T04 S02	A1
12	D017	1000	T	T01 T04 S02	A1
13	F001	400	T	T01 T04 S02	A1
14	F002	400	T	T01 T04 S02	A1
15	F003	400	T	T01 T04 S02	A1
16	F004	40	T	T01 T04 S02	A1
17	F005	60000	T	T01 T04 S02	A1
18	F006	10000	T	T01 T04 S02	A1
19	F006				B3
20	F006	2000	T	T04	A2
21	F007	300	T	T01 T04 S02	B2
22	F007	40	T	T04	A2
23	F008	100	T	T01 T04 S02	B2
24	F008	200	T	T04	A2
25	F009	100	T	T01 T04 S02	B2
26	F009	40	T	T04	A2

Continued from page 2.
NOTE: Photocopy this page before completing if you have more than 26 wastes to list.

Form Approved OMB No. 158-S80004

EPA I.D. NUMBER (enter from page 1)	FOR OFFICIAL USE ONLY
W I L D 0 0 0 6 0 8 4 7 1	W DUP 2 DUP

IV. DESCRIPTION OF HAZARDOUS WASTES (continued)

LINE NO.	A. EPA HAZARD. WASTE NO. (enter code)	B. ESTIMATED ANNUAL QUANTITY OF WASTE	C. UNIT OF MEASURE (enter code)	D. PROCESSES 1. PROCESS CODES (enter)	D. PROCESSES 2. PROCESS DESCRIPTION (if a code is not entered in D(1))
1	F010	100	T	T01 T04 S02	B2
2	F010	40	T	T04	A2
3	F011	100	T	T01 T04 S02	B2
4	F011	40	T	T04	A2
5	F012	40	T	T01 T04 S02	B2
6	F012	40	T	T04	A2
7	F019	80	T	T01 T04 S02	A1
8	F019				B3
9	F019	40	T	T04	A2
10	F024	40	T	T01 T04 S02	A1
11	F030	20000	T	T01 T04 S02	B4
12	K002	40	T	T01 T04 S02	A1
13	K002				B3
14	K002	40	T	T04	A2
15	K003	40	T	T01 T04 S02	A1
16	K003				B3
17	K003	40	T	T04	A2
18	K004	40	T	T01 T04 S02	B3
19	K004	40	T	T04	A2
20	K005	40	T	T01 T04 S02	A1
21	K005				B3
22	K005	40	T	T04	A2
23	K006	40	T	T01 T04 S02	B3
24	K006	40	T	T04	A2
25	K007	40	T	T01 T04 S02	B3
26	K007	40	T	T04	A2

CONTINUE ON REV.

Continued from page 4.

NOTE: Photocopy this page before completing if you have more than 26 wastes to list.

Form Approved OMB No. 158-S80004

EPA I.D. NUMBER (enter from page 1)	FOR OFFICIAL USE ONLY
W I L D 0 0 0 6 0 8 4 7 1	W1 DUP 2 DUP

IV. DESCRIPTION OF HAZARDOUS WASTES (continued)

LINE NO.	A. EPA HAZARD. WASTE NO. (enter code)	B. ESTIMATED ANNUAL QUANTITY OF WASTE	C. UNIT OF MEASURE (enter code)	D. PROCESSES 1. PROCESS CODES (enter)	D. PROCESSES 2. PROCESS DESCRIPTION (if a code is not entered in D(1))
1	K008	40	T	T01 T02 S02	B3
2	K008	40	T	T04	A2
3	K048	160	T	T01 T04 S02	A1
4	K048				B3
5	K048				B4
6	K048	40	T	T04	A2
7	K049	180	T	T01 T04 S02	A1
8	K049				B3
9	K049				B4
10	K049	40	T	T04	A2
11	K050	160	T	T01 T04 S02	B3
12	K050				B4
13	K050	40	T	T04	A2
14	K051	160	T	T01 T04 S02	A1
15	K051				B3
16	K051				B4
17	K051	40	T	T04	A2
18	K052	160	T	T01 T04 S02	A1
19	K052				B4
20	K052	40	T	T04	A2
21	K061	40	T	T01 T04 S02	A1
22	K061				B3
23	K062	4000	T	T01 T04 S02	A1
24	K062				B3
25	K069	40	T	T01 T04 S02	A1
26	K069				B3

CONTINUE ON REVERSE

(enter "A", "B", "C", etc. behind the "1" to identify additional waste)

Continued from page 2.
NOTE: Photocopy this page before completing if you have more than 26 wastes to list.

Form Approved OMB No. 158-S800C

EPA I.D. NUMBER (enter from page 1): W I L D 0 0 0 6 0 8 4 7 1

FOR OFFICIAL USE ONLY: W DUP 2 DUP

IV. DESCRIPTION OF HAZARDOUS WASTES (continued)

LINE NO.	A. EPA HAZARD. WASTE NO. (enter code)	B. ESTIMATED ANNUAL QUANTITY OF WASTE	C. UNIT OF MEASURE (enter code)	D. PROCESSES 1. PROCESS CODES (enter)	D. PROCESSES 2. PROCESS DESCRIPTION (if a code is not entered in D(1))
1	K 0 7 1	40	T	T 0 1 T 0 4 S 0 2	A1
2	K 0 7 1	40	T	T 0 4	A2
3	K 0 7 3	40	T	T 0 4	A2
4	K 0 8 4	40	T	T 0 1 T 0 4 S 0 2	A1
5	K 0 8 4	40	T	T 0 4	A2
6	K 0 8 5	40	T	T 0 4	A2
7	K 0 8 6	1000	T	T 0 1 T 0 4 S 0 2	A1
8	K 0 8 6				B3
9	K 0 8 6	40	T	T 0 4	A2
10	K 1 0 0	40	T	T 0 1 T 0 4 S 0 2	A1
11	K 1 0 0				B3
12	K 1 0 0	40	T	T 0 4	A2
13	K 1 0 1	40	T	T 0 1 T 0 4 S 0 2	A1
14	K 1 0 1	40	T	T 0 4	A2
15	K 1 0 2	40	T	T 0 1 T 0 4 S 0 2	A1
16	K 1 0 2	40	T	T 0 4	A2
17	K 1 0 6	40	T	T 0 1 T 0 4 S 0 2	A1
18	K 1 0 6	40	T	T 0 4	A2
19	P 0 0 4	40	T	T 0 1 T 0 4 S 0 2	A1
20	P 0 1 1	40	T	T 0 1 T 0 4 S 0 2	A1
21	P 0 1 2	40	T	T 0 1 T 0 4 S 0 2	A1
22	P 0 1 3	40	T	T 0 1 T 0 4 S 0 2	B2
23	P 0 3 0	40	T	T 0 1 T 0 4 S 0 2	B2
24	P 0 3 7	40	T	T 0 1 T 0 4 S 0 2	A1
	P 0 4 8	40	T	T 0 1 T 0 4 S 0 2	A1
26	P 0 5 0	40	T	T 0 1 T 0 4 S 0 2	A1

CONTINUE ON REV

NOTE: Photocopy this page before completing if you have more than 26 wastes to list.

Form Approved OMB No. 158-S80004

EPA I.D. NUMBER (enter from page 1)	FOR OFFICIAL USE ONLY
W I L D 0 0 0 6 0 8 4 7 1 1	W DUP 2 DUP

IV. DESCRIPTION OF HAZARDOUS WASTES (continued)

LINE NO.	A. EPA HAZARD. WASTE NO. (enter code)	B. ESTIMATED ANNUAL QUANTITY OF WASTE	C. UNIT OF MEASURE (enter code)	D. PROCESSES 1. PROCESS CODES (enter)	D. PROCESSES 2. PROCESS DESCRIPTION (If a code is not entered in D(1))
1	P051	1000	T	T01 T04 S02	A1
2	P059	40	T	T01 T04 S02	A1
3	P098	40	T	T01 T04 S02	B2
4	P099	40	T	T01 T04 S02	B2
5	P104	40	T	T01 T04 S02	B2
6	P106	40	T	T01 T04 S02	B2
7	U002	40	T	T01 T04 S02	A1
8	U003	40	T	T01 T04 S02	A1
9	U007	1000	T	T01 T04 S02	A1
10	U009	40	T	T01 T04 S02	A1
11	U019	40	T	T01 T04 S02	A1
12	U024	40	T	T01 T04 S02	A1
13	U027	40	T	T01 T02 S02	A1
14	U028	40	T	T01 T04 S02	A1
15	U029	40	T	T01 T04 S02	A1
16	U031	40	T	T01 T04 S02	A1
17	U032	40	T	T01 T04 S02	B3
18	U036	40	T	T01 T04 S02	A1
19	U037	40	T	T01 T04 S02	A1
20	U039	40	T	T01 T04 S02	A1
21	U042	40	T	T01 T04 S02	A1
22	U043	40	T	T01 T04 S02	A1
23	U044	40	T	T01 T04 S02	A1
24	U045	40	T	T01 T04 S02	A1
25	U048	40	T	T01 T04 S02	A1
26	U068	40	T	T01 T04 S02	A1

CONTINUE ON REVE

(enter "A", "B", "C", etc. behind the "3" to identify photocopied pages)

Continued from page 2.
NOTE: Photocopy this page before completing if you have more than 26 wastes to list.

Form Approved OMB No. 158-S80004

EPA I.D. NUMBER (enter from page 1)	FOR OFFICIAL USE ONLY	
W I L D 0 0 0 6 0 8 4 7 1	W	DUP 2 DUP

IV. DESCRIPTION OF HAZARDOUS WASTES (continued)

LINE NO.	A. EPA HAZARD. WASTE NO. (enter code)	B. ESTIMATED ANNUAL QUANTITY OF WASTE	C. UNIT OF MEASURE (enter code)	D. PROCESSES 1. PROCESS CODES (enter)	D. PROCESSES 2. PROCESS DESCRIPTION (if a code is not entered in D(1))
1	U131	40	T	T01 T04 S02	A1
2	U144	40	T	T01 T04 S02	A1
3	U145	40	T	T01 T04 S02	A1
4	U146	40	T	T01 T04 S02	A1
5	U154	40	T	T01 T04 S02	A1
6	U159	40	T	T01 T04 S02	A1
7	U161	40	T	T01 T04 S02	A1
8	U165	40	T	T01 T04 S02	A1
9	U169	40	T	T01 T04 S02	A1
10	U170	40	T	T01 T04 S02	A1
11	U187	40	T	T01 T04 S02	A1
[illegible]	U188	40	T	T01 T04 S02	B2
13	U138	160	T	T01 T04 S02	A1
14	U196	40	T	T01 T04 S02	A1
15	U209	40	T	T01 T04 S02	A1
16	U210	40	T	T01 T04 S02	A1
17	U211	40	T	T01 T04 S02	A1
18	U213	40	T	T01 T04 S02	A1
19	U220	40	T	T01 T04 S02	A1
20	U221	40	T	T01 T04 S02	A1
21	U225	40	T	T01 T04 S02	A1
22	U226	40	T	T01 T04 S02	A1
23	U227	40	T	T01 T04 S02	A1
24	U228	40	T	T01 T04 S02	A1
[illegible]	246	40	T	T01 T04 S02	A1
26	K044	12510	T	T01 T04 S02	A1

CONTINUE ON REVERSE

Continued from page 2.
NOTE: Photocopy this page before completing if you have more than 26 wastes to list.

Form Approved OMB No. 158-S&C004

EPA I.D. NUMBER (enter from page 1)	FOR OFFICIAL USE ONLY
W I L D 0 0 0 6 0 8 4 7 1	W DUP 2 DUP

IV. DESCRIPTION OF HAZARDOUS WASTES (continued)

LINE NO.	A. EPA HAZARD. WASTE NO. (enter code)	B. ESTIMATED ANNUAL QUANTITY OF WASTE	C. UNIT OF MEASURE (enter code)	D. PROCESSES 1. PROCESS CODES (enter)	D. PROCESSES 2. PROCESS DESCRIPTION (if a code is not entered in D(1))
1	U 0 6 9	40	T	T 0 1 T 0 4 S 0 2	A1
2	U 0 7 0	40	T	T 0 1 T 0 4 S 0 2	A1
3	U 0 7 1	40	T	T 0 1 T 0 4 S 0 2	A1
4	U 0 7 2	40	T	T 0 1 T 0 4 S 0 2	A1
5	U 0 7 3	40	T	T 0 1 T 0 4 S 0 2	A1
6	U 0 7 5	40	T	T 0 1 T 0 4 S 0 2	A1
7	U 0 7 6	40	T	T 0 1 T 0 4 S 0 2	A1
8	U 0 7 7	40	T	T 0 1 T 0 4 S 0 2	A1
9	U 0 7 8	40	T	T 0 1 T 0 4 S 0 2	A1
10	U 0 7 9	40	T	T 0 1 T 0 4 S 0 2	A1
11	U 0 8 0	40	T	T 0 1 T 0 4 S 0 2	A1
12	U 0 8 1	40	T	T 0 1 T 0 4 S 0 2	A1
13	U 0 8 3	40	T	T 0 1 T 0 4 S 0 2	A1
14	U 0 8 4	40	T	T 0 1 T 0 4 S 0 2	A1
15	U 0 8 8	40	T	T 0 1 T 0 4 S 0 2	A1
16	U 1 0 1	40	T	T 0 1 T 0 4 S 0 2	A1
17	U 1 0 2	40	T	T 0 1 T 0 4 S 0 2	A1
18	U 1 0 5	50	T	T 0 1 T 0 4 S 0 2	A1
19	U 1 0 7	40	T	T 0 1 T 0 4 S 0 2	A1
20	U 1 0 9	40	T	T 0 1 T 0 4 S 0 2	A1
21	U 1 1 1	40	T	T 0 1 T 0 4 S 0 2	A1
22	U 1 1 2	40	T	T 0 1 T 0 1 S 0 2	A1
23	U 1 1 7	40	T	T 0 1 T 0 4 S 0 2	A1
24	U 1 2 1	40	T	T 0 1 T 0 4 S 0 2	A1
25	U 1 2 9	1000	T	T 0 1 T 0 4 S 0 2	A1
26	U 1 3 0	40	T	T 0 1 T 0 4 S 0 2	A1

CONTINUE ON REVE.

(enter "A", "B", "C", etc. behind the "3" to identify photocopied ...

Continued from page 4.

NOTE: Photocopy this page before completing if you have more than 26 wastes to list.

Form Approved OMB No. 158-S80004

EPA I.D. NUMBER (enter from page 1)	FOR OFFICIAL USE ONLY
WI I: D 0 0 0 6 8 4 7 1	WI DUP 2 DUP

IV. DESCRIPTION OF HAZARDOUS WASTES (continued)

LINE NO.	A. EPA HAZARDOUS WASTE NO. (enter code)	B. ESTIMATED ANNUAL QUANTITY OF WASTE	C. UNIT OF MEASURE (enter code)	D. PROCESSES 1. PROCESS CODES (enter)	D. PROCESSES 2. PROCESS DESCRIPTION (if a code is not entered in D(1))
1	K 0 4 6	12510	T	T 0 1 T 0 4 S 0 2	
2					
3					
4					
5					
6					
7					
8					
9					
10					
11					
12					
13					
14					
15					
16					
17					
18					
19					
20					
21					
22					
23					
24					
25					
26					

Continued from page 2.

NOTE: Photocopy this page before completing if you have more than 26 wastes to list.

Form Approved OMB No. 158-S80004

EPA I.D. NUMBER (enter from page 1)	FOR OFFICIAL USE ONLY
W I L D 0 0 0 6 0 8 4 7 1 — T/A 1	W DUP — T/A 2 DUP

IV. DESCRIPTION OF HAZARDOUS WASTES (continued)

LINE NO.	A. EPA HAZARD. WASTE NO. (enter code)	B. ESTIMATED ANNUAL QUANTITY OF WASTE	C. UNIT OF MEASURE (enter code)	D. PROCESSES 1. PROCESS CODES (enter)	D. PROCESSES 2. PROCESS DESCRIPTION (if a code is not entered in D(1))
1	D001	86,000	T	S01	Storage and Transfer
2	D002	166,000	T	S01	Storage and Transfer
3	D003	86,000	T	S01	Storage and Transfer
4	D004	166,000	T	S01	Storage and Transfer
5	D005	166,000	T	S01	Storage and Transfer
6	D006	166,000	T	S01	Storage and Transfer
7	D007	166,000	T	S01	Storage and Transfer
8	D008	166,000	T	S01	Storage and Transfer
9	D009	166,000	T	S01	Storage and Transfer
10	D010	166,000	T	S01	Storage and Transfer
11	D011	166,000	T	S01	Storage and Transfer
12	D012	4,600	T	S01	Storage and Transfer
13	D013	4,600	T	S01	Storage and Transfer
14	D014	4,600	T	S01	Storage and Transfer
15	D015	4,600	T	S01	Storage and Transfer
16	D016	4,600	T	S01	Storage and Transfer
17	D017	4,600	T	S01	Storage and Transfer
18	F001	86,000	T	S01	Storage and Transfer
19	F002	86,000	T	S01	Storage and Transfer
20	F003	69,000	T	S01	Storage and Transfer
21	F004	69,000	T	S01	Storage and Transfer
22	F005	69,000	T	S01	Storage and Transfer
23	F006	69,000	T	S01	Storage and Transfer
1	F007	166,000	T	S01	Storage and Transfer
25	F008	86,000	T	S01	Storage and Transfer
26	F009	166,000	T	S01	Storage and Transfer

Continued from page 2.
NOTE: Photocopy this page before completing if you have more than 26 wastes to list.

Form Approved OMB No. 158-S80004

EPA I.D. NUMBER (enter from page 1)	FOR OFFICIAL USE ONLY
W I L D 0 0 0 6 0 8 4 7 1 — 1	W DUP — 2 DUP

IV. DESCRIPTION OF HAZARDOUS WASTES (continued)

LINE NO.	A. EPA HAZARD. WASTE NO. (enter code)	B. ESTIMATED ANNUAL QUANTITY OF WASTE	C. UNIT OF MEASURE (enter code)	D. PROCESSES 1. PROCESS CODES (enter)	D. PROCESSES 2. PROCESS DESCRIPTION (If a code is not entered in D(1))
1	F 0 1 0	86,000	T	S O 1	Storage and Transfer
2	F 0 1 1	166,000	T	S O 1	Storage and Transfer
3	F 0 1 2	86,000	T	S O 1	Storage and Transfer
4	K 0 0 1	5,700	T	S O 1	Storage and Transfer
5	K 0 0 2	5,700	T	S O 1	Storage and Transfer
6	K 0 0 3	5,700	T	S O 1	Storage and Transfer
7	K 0 0 4	5,700	T	S O 1	Storage and Transfer
8	K 0 0 5	5,700	T	S O 1	Storage and Transfer
9	K 0 0 6	5,700	T	S O 1	Storage and Transfer
10	K 0 0 7	5,700	T	S O 1	Storage and Transfer
11	K 0 0 8	5,700	T	S O 1	Storage and Transfer
12	K 0 0 9	5,700	T	S O 1	Storage and Transfer
13	K 0 1 0	5,700	T	S O 1	Storage and Transfer
14	K 0 1 1	5,700	T	S O 1	Storage and Transfer
15	K 0 1 3	5,700	T	S O 1	Storage and Transfer
16	K 0 1 4	5,700	T	S O 1	Storage and Transfer
17	K 0 1 5	5,700	T	S O 1	Storage and Transfer
18	K 0 1 6	5,700	T	S O 1	Storage and Transfer
19	K 0 1 7	5,700	T	S O 1	Storage and Transfer
20	K 0 1 8	5,700	T	S O 1	Storage and Transfer
21	K 0 1 9	5,700	T	S O 1	Storage and Transfer
22	K 0 2 0	5,700	T	S O 1	Storage and Transfer
23	K 0 2 1	5,700	T	S O 1	Storage and Transfer
24	K 0 2 2	5,700	T	S O 1	Storage and Transfer
25	K 0 2 3	5,700	T	S O 1	Storage and Transfer
26	K 0 2 4	5,700	T	S O 1	Storage and Transfer

CONTINUE ON REV

Continued from page 2.

NOTE: Photocopy this page before completing if you have more than 26 wastes to list.

Form Approved OMB No. 158-S80004

EPA I.D. NUMBER (enter from page 1)	FOR OFFICIAL USE ONLY
W I L D 0 0 0 6 0 8 4 7 1 / A C 1	W DUP 2 DUP

V. DESCRIPTION OF HAZARDOUS WASTES *(continued)*

LINE NO.	A. EPA HAZARD. WASTE NO. (enter code)	B. ESTIMATED ANNUAL QUANTITY OF WASTE	C. UNIT OF MEASURE (enter code)	D. PROCESSES 1. PROCESS CODES (enter)	D. PROCESSES 2. PROCESS DESCRIPTION (If a code is not entered in D(1))
1	K025	5,700	T	S01	Storage and Transfer
2	K026	5,700	T	S01	Storage and Transfer
3	K027	5,700	T	S01	Storage and Transfer
4	K028	5,700	T	S01	Storage and Transfer
5	K029	5,700	T	S01	Storage and Transfer
6	K030	5,700	T	S01	Storage and Transfer
7	K048	5,700	T	S01	Storage and Transfer
8	K049	5,700	T	S01	Storage and Transfer
9	K050	5,700	T	S01	Storage and Transfer
10	K051	5,700	T	S01	Storage and Transfer
11	K052	5,700	T	S01	Storage and Transfer
12	K060	5,700	T	S01	Storage and Transfer
13	K061	5,700	T	S01	Storage and Transfer
14	K062	75,000	T	S01	Storage and Transfer
15	K069	5,700	T	S01	Storage and Transfer
16	K071	5,700	T	S01	Storage and Transfer
17	K073	5,700	T	S01	Storage and Transfer
18	K083	5,700	T	S01	Storage and Transfer
19	K084	5,700	T	S01	Storage and Transfer
20	K085	5,700	T	S01	Storage and Transfer
21	K086	166,000	T	S01	Storage and Transfer
22	K087	5,700	T	S01	Storage and Transfer
23	K093	5,700	T	S01	Storage and Transfer
	K094	5,700	T	S01	Storage and Transfer
25	K095	5,700	T	S01	Storage and Transfer
26	K096	5,700	T	S01	Storage and Transfer

Continued from page 2.

NOTE: Photocopy this page before comple[illegible] if you have more than 26 wastes to list.

Form Approved OMB No. 158-S80004

EPA I.D. NUMBER (enter from page 1)	FOR OFFICIAL USE ONLY
W I L D 0 0 0 6 0 8 4 7 1 1	W DUP 2 DUP

IV. DESCRIPTION OF HAZARDOUS WASTES (continued)

LINE NO.	A. EPA HAZARD. WASTE NO. (enter code)	B. ESTIMATED ANNUAL QUANTITY OF WASTE	C. UNIT OF MEASURE (enter code)	D. PROCESSES 1. PROCESS CODES (enter)	2. PROCESS DESCRIPTION (if a code is not entered in D(1))
1	K 1 0 0	5,700	T	S O 1	Storage and Transfer
2	K 1 0 6	5,700	T	S O 1	Storage and Transfer
3	P 0 0 1	4,600	T	S O 1	Storage and Transfer
4	P 0 0 2	4,600	T	S O 1	Storage and Transfer
5	P 0 0 3	4,600	T	S O 1	Storage and Transfer
6	P 0 0 4	4,600	T	S O 1	Storage and Transfer
7	P 0 0 5	4,600	T	S O 1	Storage and Transfer
8	P 0 0 7	4,600	T	S O 1	Storage and Transfer
9	P 0 0 8	4,600	T	S O 1	Storage and Transfer
10	P 0 1 0	69,000	T	S O 1	Storage and Transfer
11	P 0 1 1	4,600	T	S O 1	Storage and Transfer
12	P 0 1 2	4,600	T	S O 1	Storage and Transfer
13	P 0 1 3	4,600	T	S O 1	Storage and Transfer
14	P 0 1 4	4,600	T	S O 1	Storage and Transfer
15	P 0 1 5	4,600	T	S O 1	Storage and Transfer
16	P 0 1 6	4,600	T	S O 1	Storage and Transfer
17	P 0 1 7	4,600	T	S O 1	Storage and Transfer
18	P 0 1 8	4,600	T	S O 1	Storage and Transfer
19	P 0 2 0	4,600	T	S O 1	Storage and Transfer
20	P 0 2 1	69,000	T	S O 1	Storage and Transfer
21	P 0 2 2	4,600	T	S O 1	Storage and Transfer
22	P 0 2 3	4,600	T	S O 1	Storage and Transfer
23	P 0 2 4	4,600	T	S O 1	Storage and Transfer
24	P 0 2 6	4,600	T	S O 1	Storage and Transfer
25	P 0 2 7	4,600	T	S O 1	Storage and Transfer
26	P 0 2 8	4,600	T	S O 1	Storage and Transfer

CONTINUE ON REVERSE

Continued from page 2.

NOTE: Photocopy this page before completing if you have more than 26 wastes to list.

Form Approved OMB No. 158-S80004

EPA I.D. NUMBER (enter from page 1)	FOR OFFICIAL USE ONLY
W I L D 0 0 0 6 0 8 4 7 1	W DUP 2

V. DESCRIPTION OF HAZARDOUS WASTES (continued)

LINE NO.	A. EPA HAZARD. WASTE NO. (enter code)	B. ESTIMATED ANNUAL QUANTITY OF WASTE	C. UNIT OF MEASURE (enter code)	D. PROCESSES 1. PROCESS CODES (enter)	D. PROCESSES 2. PROCESS DESCRIPTION (if a code is not entered in D.1)
1	P029	69,000	T	S01	Storage and Transfer
2	P030	69,000	T	S01	Storage and Transfer
3	P031	69,000	T	S01	Storage and Transfer
4	P033	4,600	T	S01	Storage and Transfer
5	P034	4,600	T	S01	Storage and Transfer
6	P036	4,600	T	S01	Storage and Transfer
7	P037	4,600	T	S01	Storage and Transfer
8	P038	4,600	T	S01	Storage and Transfer
9	P039	4,600	T	S01	Storage and Transfer
10	P040	4,600	T	S01	Storage and Transfer
11	P041	4,600	T	S01	Storage and Transfer
12	P042	4,600	T	S01	Storage and Transfer
13	P043	4,600	T	S01	Storage and Transfer
14	P044	4,600	T	S01	Storage and Transfer
15	P045	4,600	T	S01	Storage and Transfer
16	P046	4,600	T	S01	Storage and Transfer
17	P048	4,600	T	S01	Storage and Transfer
18	P049	4,600	T	S01	Storage and Transfer
19	P050	4,600	T	S01	Storage and Transfer
20	P051	4,600	T	S01	Storage and Transfer
21	P054	4,600	T	S01	Storage and Transfer
22	P057	4,600	T	S01	Storage and Transfer
23	P058	4,600	T	S01	Storage and Transfer
	P059	4,600	T	S01	Storage and Transfer
25	P060	4,600	T	S01	Storage and Transfer
26	P062	4,600	T	S01	Storage and Transfer

Continued from page 2.
NOTE: Photocopy this page before completing if you have more than 26 wastes to list.

Form Approved OMB No. 158-S80004

EPA I.D. NUMBER (enter from page 1): W I L D 0 0 0 6 0 8 4 7 1 — F/A 1

FOR OFFICIAL USE ONLY: W DUP 2 DUP

IV. DESCRIPTION OF HAZARDOUS WASTES (continued)

LINE NO.	A. EPA HAZARD. WASTE NO. (enter code)	B. ESTIMATED ANNUAL QUANTITY OF WASTE	C. UNIT OF MEASURE (enter code)	D. PROCESSES 1. PROCESS CODES (enter)	D. PROCESSES 2. PROCESS DESCRIPTION (if a code is not entered in D.1.)
1	P064	4,600	T	S01	Storage and Transfer
2	P065	4,600	T	S01	Storage and Transfer
3	P066	4,600	T	S01	Storage and Transfer
4	P067	4,600	T	S01	Storage and Transfer
5	P068	4,600	T	S01	Storage and Transfer
6	P069	4,600	T	S01	Storage and Transfer
7	P070	4,600	T	S01	Storage and Transfer
8	P071	4,600	T	S01	Storage and Transfer
9	P072	4,600	T	S01	Storage and Transfer
10	P074	69,000	T	S01	Storage and Transfer
11	P075	69,000	T	S01	Storage and Transfer
12	P076	69,000	T	S01	Storage and Transfer
13	P077	4,600	T	S01	Storage and Transfer
14	P082	4,600	T	S01	Storage and Transfer
15	P084	4,600	T	S01	Storage and Transfer
16	P085	4,600	T	S01	Storage and Transfer
17	P087	4,600	T	S01	Storage and Transfer
18	P088	4,600	T	S01	Storage and Transfer
19	P089	4,600	T	S01	Storage and Transfer
20	P092	4,600	T	S01	Storage and Transfer
21	P093	4,600	T	S01	Storage and Transfer
22	P094	4,600	T	S01	Storage and Transfer
23	P095	4,600	T	S01	Storage and Transfer
24	P096	4,600	T	S01	Storage and Transfer
25	P097	4,600	T	S01	Storage and Transfer
26	P098	69,000	T	S01	Storage and Transfer

CONTINUE ON REV.

Continued from page 2.

NOTE: Photocopy this page before completing if you have more than 26 wastes to list.

Form Approved OMB No. 158-S80004

EPA I.D. NUMBER (enter from page 1): W I L D 0 0 0 6 0 8 4 7 1 — F/A C: 1

FOR OFFICIAL USE ONLY: W DUP 1 2

V. DESCRIPTION OF HAZARDOUS WASTES (continued)

LINE NO.	A. EPA HAZARD. WASTE NO. (enter code)	B. ESTIMATED ANNUAL QUANTITY OF WASTE	C. UNIT OF MEASURE (enter code)	D. PROCESSES 1. PROCESS CODES (enter)	D. PROCESSES 2. PROCESS DESIGN (if a code is not entered in D.1)
1	P099	69,000	T	S01	Storage and Transfer
2	P101	4,600	T	S01	Storage and Transfer
3	P102	4,600	T	S01	Storage and Transfer
4	P103	4,600	T	S01	Storage and Transfer
5	P104	69,000	T	S01	Storage and Transfer
6	P105	69,000	T	S01	Storage and Transfer
7	P106	4,600	T	S01	Storage and Transfer
8	P107	4,600	T	S01	Storage and Transfer
9	P108	4,600	T	S01	Storage and Transfer
10	P109	4,600	T	S01	Storage and Transfer
11	P110	4,600	T	S01	Storage and Transfer
12	P111	4,600	T	S01	Storage and Transfer
13	P112	4,600	T	S01	Storage and Transfer
14	P113	4,600	T	S01	Storage and Transfer
15	P114	4,600	T	S01	Storage and Transfer
16	P115	4,600	T	S01	Storage and Transfer
17	P116	4,600	T	S01	Storage and Transfer
18	P118	4,600	T	S01	Storage and Transfer
19	P119	4,600	T	S01	Storage and Transfer
20	P120	4,600	T	S01	Storage and Transfer
21	P121	69,000	T	S01	Storage and Transfer
22	P122	4,600	T	S01	Storage and Transfer
23	P123	4,600	T	S01	Storage and Transfer
	U001	69,000	T	S01	Storage and Transfer
25	U002	69,000	T	S01	Storage and Transfer
26	U003	69,000	T	S01	Storage and Transfer

Continued from page 2.

NOTE: Photocopy this page before completing if you have more than 26 wastes to list.

Form Approved OMB No. 158-S80004

EPA I.D. NUMBER (enter from page 1)	FOR OFFICIAL USE ONLY
W I L D 0 0 0 6 0 8 4 7 1 1	W DUP 2

IV. DESCRIPTION OF HAZARDOUS WASTES (continued)

LINE NO.	A. EPA HAZARD. WASTE NO. (enter code)	B. ESTIMATED ANNUAL QUANTITY OF WASTE	C. UNIT OF MEASURE (enter code)	D. PROCESSES 1. PROCESS CODES (enter)				2. PROCESS DESCRIPTION (If a code is not entered in D(1))
1	U004	69,000	T	S01				Storage and Transfer
2	U006	69,000	T	S01				Storage and Transfer
3	U007	69,000	T	S01				Storage and Transfer
4	U008	69,000	T	S01				Storage and Transfer
5	U009	69,000	T	S01				Storage and Transfer
6	U010	4,600	T	S01				Storage and Transfer
7	U011	4,600	T	S01				Storage and Transfer
8	U012	69,000	T	S01				Storage and Transfer
9	U014	69,000	T	S01				Storage and Transfer
10	U015	69,000	T	S01				Storage and Transfer
11	U016	69,000	T	S01				Storage and Transfer
12	U017	4,600	T	S01				Storage and Transfer
13	U018	4,600	T	S01				Storage and Transfer
14	U019	69,000	T	S01				Storage and Transfer
15	U020	69,000	T	S01				Storage and Transfer
16	U021	69,000	T	S01				Storage and Transfer
17	U022	69,000	T	S01				Storage and Transfer
18	U023	4,600	T	S01				Storage and Transfer
19	U024	4,600	T	S01				Storage and Transfer
20	U025	4,600	T	S01				Storage and Transfer
21	U026	4,600	T	S01				Storage and Transfer
22	U027	4,600	T	S01				Storage and Transfer
23	U028	4,600	T	S01				Storage and Transfer
24	U029	4,600	T	S01				Storage and Transfer
25	U030	4,600	T	S01				Storage and Transfer
26	U031	69,000	T	S01				Storage and Transfer

CONTINUE ON REVE

Continued from page 2.

NOTE: Photocopy this page before completing if you have more than 26 wastes to list.

Form Approved OMB No. 158-S80004

EPA I.D. NUMBER (enter from page 1): W I L D 0 0 0 6 0 8 4 7 1 1

FOR OFFICIAL USE ONLY: W DUP 2 [redacted]

V. DESCRIPTION OF HAZARDOUS WASTES (continued)

LINE NO.	A. EPA HAZARD. WASTE NO. (enter code)	B. ESTIMATED ANNUAL QUANTITY OF WASTE	C. UNIT OF MEASURE (enter code)	D. PROCESSES 1. PROCESS CODES (enter)	D. PROCESSES 2. PROCESS DESCRIPTION (If a code is not entered in D(1))
1	U032	69,000	T	S01	Storage and Transfer
2	U033	4,600	T	S01	Storage and Transfer
3	U034	4,6000	T	S01	Storage and Transfer
4	U035	4,600	T	S01	Storage and Transfer
5	U036	4,600	T	S01	Storage and Transfer
6	U037	69,000	T	S01	Storage and Transfer
7	U038	4,600	T	S01	Storage and Transfer
8	U039	4,600	T	S01	Storage and Transfer
9	U041	4,600	T	S01	Storage and Transfer
10	U042	4,600	T	S01	Storage and Transfer
11	U043	4,600	T	S01	Storage and Transfer
12	U044	69,000	T	S01	Storage and Transfer
13	U045	4,600	T	S01	Storage and Transfer
14	U046	4,600	T	S01	Storage and Transfer
15	U047	4,600	T	S01	Storage and Transfer
16	U048	4,600	T	S01	Storage and Transfer
17	U049	4,600	T	S01	Storage and Transfer
18	U050	4,600	T	S01	Storage and Transfer
19	U051	69,000	T	S01	Storage and Transfer
20	U052	69,000	T	S01	Storage and Transfer
21	U053	69,000	T	S01	Storage and Transfer
22	U055	69,000	T	S01	Storage and Transfer
23	U056	69,000	T	S01	Storage and Transfer
	U057	69,000	T	S01	Storage and Transfer
25	U058	4,600	T	S01	Storage and Transfer
26	U059	4,600	T	S01	Storage and Transfer

Continued from page 2.

NOTE: Photocopy this page before completing if you have more than 26 wastes to list.

Form Approved OMB No. 158-S80004

EPA I.D. NUMBER (enter from page 1): W I L D 0 0 0 6 0 8 4 7 1 — 1

FOR OFFICIAL USE ONLY: W DUP 2

IV. DESCRIPTION OF HAZARDOUS WASTES (continued)

LINE NO.	A. EPA HAZARD. WASTE NO. (enter code)	B. ESTIMATED ANNUAL QUANTITY OF WASTE	C. UNIT OF MEASURE (enter code)	D. PROCESSES 1. PROCESS CODES (enter)	D. PROCESSES 2. PROCESS DESIGN (if D-code is not entered)
1	U060	4,600	T	S01	Storage and Transfer
2	U061	4,600	T	S01	Storage and Transfer
3	U062	4,600	T	S01	Storage and Transfer
4	U063	4,600	T	S01	Storage and Transfer
5	U064	4,600	T	S01	Storage and Transfer
6	U066	4,600	T	S01	Storage and Transfer
7	U067	4,600	T	S01	Storage and Transfer
8	U068	4,600	T	S01	Storage and Transfer
9	U069	69,000	T	S01	Storage and Transfer
10	U070	69,000	T	S01	Storage and Transfer
11	U071	4,600	T	S01	Storage and Transfer
12	U072	4,600	T	S01	Storage and Transfer
13	U073	4,600	T	S01	Storage and Transfer
14	U074	4,600	T	S01	Storage and Transfer
15	U075	4,600	T	S01	Storage and Transfer
16	U076	4,600	T	S01	Storage and Transfer
17	U077	4,600	T	S01	Storage and Transfer
18	U078	4,600	T	S01	Storage and Transfer
19	U079	4,600	T	S01	Storage and Transfer
20	U080	4,600	T	S01	Storage and Transfer
21	U081	4,600	T	S01	Storage and Transfer
22	U082	4,600	T	S01	Storage and Transfer
23	U083	4,600	T	S01	Storage and Transfer
24	U084	4,600	T	S01	Storage and Transfer
25	U085	4,600	T	S01	Storage and Transfer
26	U086	4,600	T	S01	Storage and Transfer

CONTINUE ON RE

Continued from page 2.

NOTE: Photocopy this page before completing if you have more than 26 wastes to list.

Form Approved OMB No. 158-S80004

EPA I.D. NUMBER (enter from page 1): W I L D 0 0 0 6 0 8 4 7 1 F/A C 1

W DUP 2 DUP

7. DESCRIPTION OF HAZARDOUS WASTES *(continued)*

LINE NO.	A. EPA HAZARD. WASTE NO. (enter code)	B. ESTIMATED ANNUAL QUANTITY OF WASTE	C. UNIT OF MEASURE (enter code)	D. PROCESSES 1. PROCESS CODES (enter)	2. PROCESS DESCRIPTION (if a code is not entered in D.1.)
1	U087	4,600	T	S01	Storage and Transfer
2	U088	69,000	T	S01	Storage and Transfer
3	U089	4,600	T	S01	Storage and Transfer
4	U090	4,600	T	S01	Storage and Transfer
5	U091	4,600	T	S01	Storage and Transfer
6	U092	69,000	T	S01	Storage and Transfer
7	U093	4,600	T	S01	Storage and Transfer
8	U094	4,600	T	S01	Storage and Transfer
9	U095	4,600	T	S01	Storage and Transfer
10	U096	4,600	T	S01	Storage and Transfer
11	U097	4,600	T	S01	Storage and Transfer
12	U098	4,600	T	S01	Storage and Transfer
13	U099	4,600	T	S01	Storage and Transfer
14	U101	4,600	T	S01	Storage and Transfer
15	U102	4,600	T	S01	Storage and Transfer
16	U103	4,600	T	S01	Storage and Transfer
17	U105	4,600	T	S01	Storage and Transfer
18	U106	4,600	T	S01	Storage and Transfer
19	U107	69,000	T	S01	Storage and Transfer
20	U108	69,000	T	S01	Storage and Transfer
21	U109	4,600	T	S01	Storage and Transfer
22	U110	4,600	T	S01	Storage and Transfer
23	U111	4,600	T	S01	Storage and Transfer
24	U112	69,000	T	S01	Storage and Transfer
25	U113	69,000	T	S01	Storage and Transfer
26	U114	4,600	T	S01	Storage and Transfer

CONTINUE ON

Continued from page 2.

NOTE: Photocopy this page before completing if you have more than 26 wastes to list.

Form Approved OMB No. 158-S80004

EPA I.D. NUMBER (enter from page 1): W I L D 0 0 0 6 0 8 4 7 1 — 1

W DUP 2 [redacted]

IV. DESCRIPTION OF HAZARDOUS WASTES (continued)

LINE NO.	A. EPA HAZARD. WASTE NO. (enter code)	B. ESTIMATED ANNUAL QUANTITY OF WASTE	C. UNIT OF MEASURE (enter code)	D. PROCESSES 1. PROCESS CODES (enter)	D. PROCESSES 2. PROCESS DESCRIPTION (if a code is not entered in D.1)
1	U115	4,600	T	S01	Storage and Transfer
2	U116	4,600	T	S01	Storage and Transfer
3	U117	69,000	T	S01	Storage and Transfer
4	U118	4,600	T	S01	Storage and Transfer
5	U119	4,600	T	S01	Storage and Transfer
6	U120	4,600	T	S01	Storage and Transfer
7	U121	4,600	T	S01	Storage and Transfer
8	U122	69,00	T	S01	Storage and Transfer
9	U123	69,000	T	S01	Storage and Transfer
10	U124	4,600	T	S01	Storage and Transfer
11	U125	4,600	T	S01	Storage and Transfer
12	U126	4,600	T	S01	Storage and Transfer
13	U127	4,600	T	S01	Storage and Transfer
14	U128	4,600	T	S01	Storage and Transfer
15	U129	4,600	T	S01	Storage and Transfer
16	U130	4,600	T	S01	Storage and Transfer
17	U131	4,600	T	S01	Storage and Transfer
18	U132	4,600	T	S01	Storage and Transfer
19	U133	4,600	T	S01	Storage and Transfer
20	U134	4,600	T	S01	Storage and Transfer
21	U135	4,600	T	S01	Storage and Transfer
22	U136	4,600	T	S01	Storage and Transfer
23	U137	4,600	T	S01	Storage and Transfer
24	U138	4,600	T	S01	Storage and Transfer
25	U139	4,600	T	S01	Storage and Transfer
26	U140	69,000	T	S01	Storage and Transfer

Continued from page 2.

NOTE: Photocopy this page before completing if you have more than 26 wastes to list.

Form Approved OMB No. 158-S80004

EPA I.D. NUMBER (enter from page 1)	FOR OFFICIAL USE ONLY
W I L D 0 0 0 6 0 8 4 7 1 / I	W DUP / 2

V. DESCRIPTION OF HAZARDOUS WASTES (continued)

LINE NO.	A. EPA HAZARD. WASTE NO. (enter code)	B. ESTIMATED ANNUAL QUANTITY OF WASTE	C. UNIT OF MEASURE (enter code)	D. PROCESSES 1. PROCESS CODES (enter)	D. PROCESSES 2. PROCESS DESCRIPTION (if a code is not entered in D.1.)
1	U141	4,600	T	S01	Storage and Transfer
2	U142	4,600	T	S01	Storage and Transfer
3	U143	4,600	T	S01	Storage and Transfer
4	U144	4,600	T	S01	Storage and Transfer
5	U145	4,600	T	S01	Storage and Transfer
6	U146	4,600	T	S01	Storage and Transfer
7	U147	4,600	T	S01	Storage and Transfer
8	U148	4,600	T	S01	Storage and Transfer
9	U149	4,600	T	S01	Storage and Transfer
10	U150	4,600	T	S01	Storage and Transfer
11	U151	4,600	T	S01	Storage and Transfer
12	U152	4,600	T	S01	Storage and Transfer
13	U153	4,600	T	S01	Storage and Transfer
14	U154	69,000	T	S01	Storage and Transfer
15	U155	4,600	T	S01	Storage and Transfer
16	U156	4,600	T	S01	Storage and Transfer
17	U157	4,600	T	S01	Storage and Transfer
18	U158	4,600	T	S01	Storage and Transfer
19	U159	69,000	T	S01	Storage and Transfer
20	U160	4,600	T	S01	Storage and Transfer
21	U161	69,000	T	S01	Storage and Transfer
22	U162	69,000	T	S01	Storage and Transfer
23	U163	4,600	T	S01	Storage and Transfer
	U164	4,600	T	S01	Storage and Transfer
25	U165	69,000	T	S01	Storage and Transfer
26	U166	4,600	T	S01	Storage and Transfer

Continued from page 2.

NOTE: Photocopy this page before c[illegible]ting if you have more than 26 wastes to list.

Form Approved OMB No. 158-S80004

EPA I.D. NUMBER (enter from page 1)																FOR OFFICIAL USE ONLY					
W	I	L	D	0	0	0	6	0	8	4	7	1	T/A	C	1	W	DUP	1	2	[illegible]	

IV. DESCRIPTION OF HAZARDOUS WASTES (continued)

LINE NO.	A. EPA HAZARD. WASTE NO. (enter code)	B. ESTIMATED ANNUAL QUANTITY OF WASTE	C. UNIT OF MEASURE (enter code)	D. PROCESSES 1. PROCESS CODES (enter)	2. PROCESS DESIGN[illegible] (if a code is not entered in D.1.)
1	U167	4,600	T	S01	Storage and Transfer
2	U168	4,600	T	S01	Storage and Transfer
3	U169	69,000	T	S01	Storage and Transfer
4	U170	4,600	T	S01	Storage and Transfer
5	U171	4,600	T	S01	Storage and Transfer
6	U172	4,600	T	S01	Storage and Transfer
7	U173	4,600	T	S01	Storage and Transfer
8	U174	4,600	T	S01	Storage and Transfer
9	U176	4,600	T	S01	Storage and Transfer
10	U177	4,600	T	S01	Storage and Transfer
11	U178	4,600	T	S01	Storage and Transfer
12	U179	4,600	T	S01	Storage and Transfer
13	U180	4,600	T	S01	Storage and Transfer
14	U181	4,600	T	S01	Storage and Transfer
15	U182	4,600	T	S01	Storage and Transfer
16	U183	4,600	T	S01	Storage and Transfer
17	U184	4,600	T	S01	Storage and Transfer
18	U185	4,600	T	S01	Storage and Transfer
19	U186	4,600	T	S01	Storage and Transfer
20	U187	4,600	T	S01	Storage and Transfer
21	U188	69,00	T	S01	Storage and Transfer
22	U189	4,600	T	S01	Storage and Transfer
23	U190	4,600	T	S01	Storage and Transfer
24	U191	4,600	T	S01	Storage and Transfer
25	U192	4,600	T	S01	Storage and Transfer
26	U193	4,600	T	S01	Storage and Transfer

Continued from page 2.

NOTE: Photocopy this page before completing if you have more than 26 wastes to list.

Form Approved OMB No. 158-S80004

EPA I.D. NUMBER (enter from page 1): W I L D 0 0 0 6 0 8 4 7 1 I

FOR OFFICIAL USE ONLY: W DUP 2

V. DESCRIPTION OF HAZARDOUS WASTES (continued)

LINE NO.	A. EPA HAZARD. WASTE NO. (enter code)	B. ESTIMATED ANNUAL QUANTITY OF WASTE	C. UNIT OF MEASURE (enter code)	D. PROCESSES 1. PROCESS CODES (enter)	D. PROCESSES 2. PROCESS DESCRIPTION (if a code is not entered in D(1))
1	U194	4,600	T	S01	Storage and Transfer
2	U196	69,000	T	S01	Storage and Transfer
3	U197	4,600	T	S01	Storage and Transfer
4	U198	4,600	T	S01	Storage and Transfer
5	U200	4,600	T	S01	Storage and Transfer
6	U201	4,600	T	S01	Storage and Transfer
7	U202	4,600	T	S01	Storage and Transfer
8	U203	4,600	T	S01	Storage and Transfer
9	U204	4,600	T	S01	Storage and Transfer
10	U205	4,600	T	S01	Storage and Transfer
11	U206	4,600	T	S01	Storage and Transfer
12	U207	4,600	T	S01	Storage and Transfer
13	U208	4,600	T	S01	Storage and Transfer
14	U209	4,600	T	S01	Storage and Transfer
15	U210	69,000	T	S01	Storage and Transfer
16	U211	4,600	T	S01	Storage and Transfer
17	U005	10	T	S01	Storage and Transfer
18	U213	69,000	T	S01	Storage and Transfer
19	U214	4,600	T	S01	Storage and Transfer
20	U215	4,600	T	S01	Storage and Transfer
21	U216	4,600	T	S01	Storage and Transfer
22	U217	4,600	T	S01	Storage and Transfer
23	U218	4,600	T	S01	Storage and Transfer
[illegible]	U219	4,600	T	S01	Storage and Transfer
25	U220	69,000	T	S01	Storage and Transfer
26	U221	4,600	T	S01	Storage and Transfer

Continued from page 2.
NOTE: Photocopy this page before comple[redacted] if you have more than 26 wastes to list.

Form Approved OMB No. 158-S80004

EPA I.D. NUMBER (enter from page 1)

W I L D 0 0 0 6 0 8 4 7 1 | W/A | 1

[redacted] W DUP [redacted]

DESCRIPTION OF HAZARDOUS WASTES (continued)

LINE NO.	A. EPA HAZARD. WASTE NO. (enter code)	B. ESTIMATED ANNUAL QUANTITY OF WASTE	C. UNIT OF MEASURE (enter code)	D. PROCESSES 1. PROCESS CODES (enter)	2. PROCESS DESCRIPTION (if a code is not entered in D(1))
1	U222	4,600	T	S01	Storage and Transfer
2	U223	69,000	T	S01	Storage and Transfer
3	U225	4,600	T	S01	Storage and Transfer
4	U226	86,000	T	S01	Storage and Transfer
5	U227	4,600	T	S01	Storage and Transfer
6	U228	86,000	T	S01	Storage and Transfer
7	U013	10	T	S01	Storage and Transfer
8	U243	10	T	S01	Storage and Transfer
9	U244	10	T	S01	Storage and Transfer
10	U246	10	T	S01	Storage and Transfer
11	U234	4,600	T	S01	Storage and Transfer
12	U235	4,600	T	S01	Storage and Transfer
13	U236	4,600	T	S01	Storage and Transfer
14	U237	4,600	T	S01	Storage and Transfer
15	U238	69,000	T	S01	Storage and Transfer
16	U239	69,000	T	S01	Storage and Transfer
17	U240	10	T	S01	Storage and Transfer
18	U247	4,600	T	S01	Storage and Transfer
19	P006	10	T	S01	Storage and Transfer
20	P009	10	T	S01	Storage and Transfer
21	P056	10	T	S01	Storage and Transfer
22	P063	10	T	S01	Storage and Transfer
23	P078	10	T	S01	Storage and Transfer
24	F019	10	T	S01	Storage and Transfer
25	K012	10	T	S01	Storage and Transfer
26	K031	10	T	S01	Storage and Transfer

CONTINUE ON REVE

Continued from page 2.

NOTE: Photocopy this page before completing if you have more than 26 wastes to list.

Form Approved OMB No. 158-S80004

EPA I.D. NUMBER (enter from page 1)	FOR OFFICIAL USE ONLY
WILD000608471 1	W DUP 2 DUP

7. DESCRIPTION OF HAZARDOUS WASTES (continued)

LINE NO.	A. EPA HAZARD. WASTE NO. (enter code)	B. ESTIMATED ANNUAL QUANTITY OF WASTE	C. UNIT OF MEASURE (enter code)	D. PROCESSES 1. PROCESS CODES (enter)	D. PROCESSES 2. PROCESS DESCRIPTION (If a code is not entered in D(1))
1	K032	10	T	S01	Storage and Transfer
2	K033	10	T	S01	Storage and Transfer
3	K034	10	T	S01	Storage and Transfer
4	K035	10	T	S01	Storage and Transfer
5	K036	10	T	S01	Storage and Transfer
6	K037	10	T	S01	Storage and Transfer
7	K038	10	T	S01	Storage and Transfer
8	K039	10	T	S01	Storage and Transfer
9	K040	10	T	S01	Storage and Transfer
10	K041	10	T	S01	Storage and Transfer
11	K042	10	T	S01	Storage and Transfer
12	K043	10	T	S01	Storage and Transfer
13	K097	10	T	S01	Storage and Transfer
14	K098	10	T	S01	Storage and Transfer
15	K099	10	T	S01	Storage and Transfer
16	K101	10	T	S01	Storage and Transfer
17	K102	10	T	S01	Storage and Transfer
18	K103	10	T	S01	Storage and Transfer
19	K104	10	T	S01	Storage and Transfer
20	K105	10	T	S01	Storage and Transfer
21	P047	10	T	S01	Storage and Transfer
22	P061	10	T	S01	Storage and Transfer
23	P073	10	T	S01	Storage and Transfer
24	F027	27,600	T	S01	Storage and Transfer
25	D018	4,600	T	S01	Storage and Transfer
26	D019	4,600	T	S01	Storage and Transfer

Continued from page 2.
NOTE: Photocopy this page before completing if you have more than 26 wastes to list.

Form Approved OMB No. 158-S80004

EPA I.D. NUMBER (enter from page 1): W I L D 0 0 0 6 0 8 4 7 1 — T/A/C 1

FOR OFFICIAL USE ONLY: W DUP 2 [redacted]

IV. DESCRIPTION OF HAZARDOUS WASTES (continued)

LINE NO.	A. EPA HAZARD. WASTE NO. (enter code)	B. ESTIMATED ANNUAL QUANTITY OF WASTE	C. UNIT OF MEASURE (enter code)	D. PROCESSES 1. PROCESS CODES (enter)	2. PROCESS DESCRIPTION (If a code is not entered in D.1)
1	D020	4,600	T	S01	Storage and Transfer
2	D021	4,600	T	S01	Storage and Transfer
3	D022	4,600	T	S01	Storage and Transfer
4	D023	4,600	T	S01	Storage and Transfer
5	D024	4,600	T	S01	Storage and Transfer
6	D025	4,600	T	S01	Storage and Transfer
7	D026	4,600	T	S01	Storage and Transfer
8	D027	4,600	T	S01	Storage and Transfer
9	D028	4,600	T	S01	Storage and Transfer
10	D029	4,600	T	S01	Storage and Transfer
11	D030	4,600	T	S01	Storage and Transfer
12	D031	4,600	T	S01	Storage and Transfer
13	D032	4,600	T	S01	Storage and Transfer
14	D033	4,600	T	S01	Storage and Transfer
15	D034	4,600	T	S01	Storage and Transfer
16	D035	4,600	T	S01	Storage and Transfer
17	D036	4,600	T	S01	Storage and Transfer
18	D037	4,600	T	S01	Storage and Transfer
19	D038	4,600	T	S01	Storage and Transfer
20	D039	4,600	T	S01	Storage and Transfer
21	D040	4,600	T	S01	Storage and Transfer
22	D041	4,600	T	S01	Storage and Transfer
23	D042	4,600	T	S01	Storage and Transfer
24	D043	4,600	T	S01	Storage and Transfer
25			T	S01	Storage and Transfer
26			T	S01	Storage and Transfer

CONTINUE ON REVERSE

Continued from the front.

IV. DESCRIPTION OF HAZARDOUS WASTES *(continued)*

E. USE THIS SPACE TO LIST ADDITIONAL PROCESS CODES FROM ITEM D(1) ON PAGE 3.

Refer to Part B, Section A-5

EPA I.D. NO. *(enter from page 1)*

F I L D 0 0 0 6 0 8 4 7 1 T/A 6

V. FACILITY DRAWING

All existing facilities must include in the space provided on page 5 a scale drawing of the facility *(see instructions for more detail).*

VI. PHOTOGRAPHS

All existing facilities must include photographs *(aerial or ground—level)* that clearly delineate all existing structures; existing storage, treatment and disposal areas; and sites of future storage, treatment or disposal areas *(see instructions for more detail).*

VII. FACILITY GEOGRAPHIC LOCATION

LATITUDE *(degrees, minutes, & seconds)*	LONGITUDE *(degrees, minutes, & seconds)*
41 40 44	87 34 46

VIII. FACILITY OWNER

☐ A. If the facility owner is also the facility operator as listed in Section VIII on Form 1, "General Information", place an "X" in the box to the left and skip to Section IX below.

B. If the facility owner is not the facility operator as listed in Section VIII on Form 1, complete the following items:

1. NAME OF FACILITY'S LEGAL OWNER	2. PHONE NO. *(area code & no.)*
E	

3. STREET OR P.O. BOX	4. CITY OR TOWN	5. ST.	6. ZIP CODE
F	G		

IX. OWNER CERTIFICATION

I certify under penalty of law that I have personally examined and am familiar with the information submitted in this and all attached documents, and that based on my inquiry of those individuals immediately responsible for obtaining the information, I believe that the submitted information is true, accurate, and complete. I am aware that there are significant penalties for submitting false information, including the possibility of fine and imprisonment.

A. NAME *(print or type)*	B. SIGNATURE	C. DATE SIGNED
Michael R. Hatch, President		4/23/86

X. OPERATOR CERTIFICATION

I certify under penalty of law that I have personally examined and am familiar with the information submitted in this and all attached documents, and that based on my inquiry of those individuals immediately responsible for obtaining the information, I believe that the submitted information is true, accurate, and complete. I am aware that there are significant penalties for submitting false information, including the possibility of fine and imprisonment.

A. NAME *(print or type)*	B. SIGNATURE	C. DATE SIGNED

 CONTINUE ON PAGE 5

Form Approved OMB No. 158-S80004

Continued from page 4.

V. FACILITY DRAWING (see page 4)

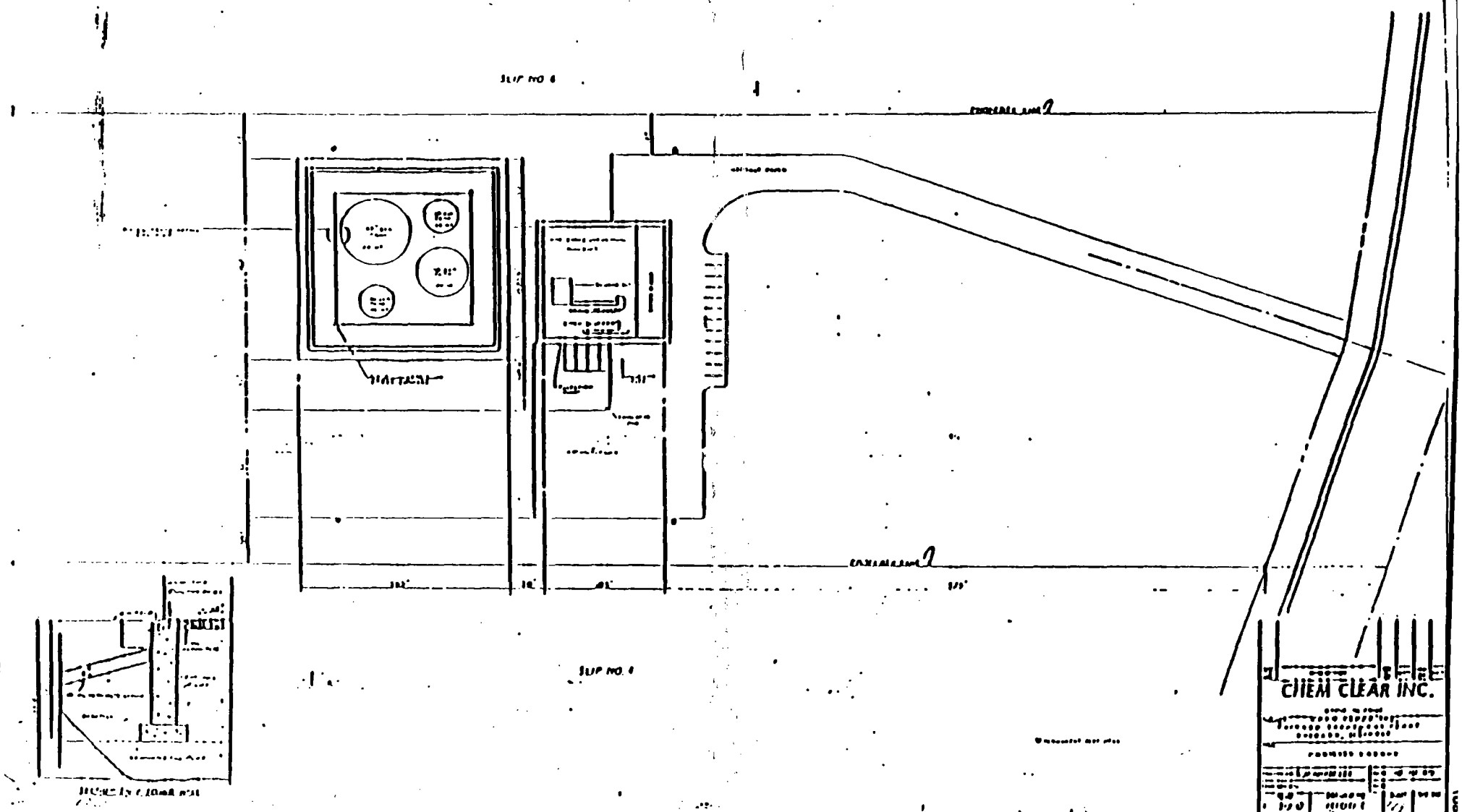

CHEM-CLEAR®

SUITE 915 • 992 OLD EAGLE SCHOOL ROAD • WAYNE, PENNSYLVANIA 19087 • (215) 687-8990

May 5, 1987

Mr. Eugene P. Theios
Manager - Disposal Alternatives Unit
Permit Section
Division of Land Pollution Control
Illinois Environmental Protection Agency
2200 Churchill Road
Springfield, IL 62706

RE: EPA ID No. ILD000608471

Dear Mr. Theios:

Enclosed you will find a revised copy of ChemClear's Part A Hazardous Waste Permit Application. The revisions reflect those facility changes requested in the Waste Storage/Treatment Site Development Application submitted to your office in April.

If you have any questions regarding the enclosed, please do not hesitate to contact Chicago Plant Manager Jim Laubsted or myself.

Sincerely,

William S. Harer

William S. Harer
Environmental Engineer

WSH/dmp
Enclosure

cc: Jim Laubsted, Chicago Plant Manager
EPA Region V RCRA Activities

RECEIVED
MAY 12 1987
SWD - AIS
U.S. EPA, REGION V

COPY 2

Please print or type in the unshaded areas only
(fill-in areas are spaced for elite type, i.e., 12 characters/inch).

Form Approved OMB No. 158-S80004

FORM 3 RCRA

U.S. ENVIRONMENTAL PROTECTION AGENCY

HAZARDOUS WASTE PERMIT APPLICATION

Consolidated Permits Program

(This information is required under Section 3005 of RCRA.)

EPA I.D. NUMBER: F I L D 0 0 0 6 0 8 4 7 1 1

FOR OFFICIAL USE ONLY

APPLICATION APPROVED	DATE RECEIVED (yr., mo., & day)	COMMENTS

Part - B -
Section A - 1
ILD000608471

II. FIRST OR REVISED APPLICATION

Place an "X" in the appropriate box in A or B below *(mark one box only)* to indicate whether this is the first application you are submitting for your facility or a revised application. If this is your first application and you already know your facility's EPA I.D. Number, or if this is a revised application, enter your facility's EPA I.D. Number in Item I above.

A. FIRST APPLICATION *(place an "X" below and provide the appropriate date)*

[X] 1. EXISTING FACILITY *(See instructions for definition of "existing" facility. Complete item below.)*

FOR EXISTING FACILITIES, PROVIDE THE DATE *(yr., mo., & day)* OPERATION BEGAN OR THE DATE CONSTRUCTION COMMENCED *(use the boxes to the left)*

C 8 | YR. | MO. | DAY

[ ] 2. NEW FACILITY *(Complete item below.)*

FOR NEW FACILITIES, PROVIDE THE DATE *(yr., mo., & day)* OPERATION BEGAN OR IS EXPECTED TO BEGIN

YR.	MO.	DAY

B. REVISED APPLICATION *(place an "X" below and complete Item I above)*

[XX] 1. FACILITY HAS INTERIM STATUS

[ ] 2. FACILITY HAS A RCRA PERMIT

III. PROCESSES – CODES AND DESIGN CAPACITIES

A. PROCESS CODE – Enter the code from the list of process codes below that best describes each process to be used at the facility. Ten lines are provided for entering codes. If more lines are needed, enter the code(s) in the space provided. If a process will be used that is not included in the list of codes below, then describe the process *(including its design capacity)* in the space provided on the form *(Item III-C)*.

B. PROCESS DESIGN CAPACITY – For each code entered in column A enter the capacity of the process.

1. AMOUNT – Enter the amount.
2. UNIT OF MEASURE – For each amount entered in column B(1), enter the code from the list of unit measure codes below that describes the unit of measure used. Only the units of measure that are listed below should be used.

PROCESS	PROCESS CODE	APPROPRIATE UNITS OF MEASURE FOR PROCESS DESIGN CAPACITY
Storage:		
CONTAINER *(barrel, drum, etc.)*	S01	GALLONS OR LITERS
TANK	S02	GALLONS OR LITERS
WASTE PILE	S03	CUBIC YARDS OR CUBIC METERS
SURFACE IMPOUNDMENT	S04	GALLONS OR LITERS
Disposal:		
INJECTION WELL	D79	GALLONS OR LITERS
LANDFILL	D80	ACRE-FEET *(the volume that would cover one acre to a depth of one foot)* OR HECTARE-METER
LAND APPLICATION	D81	ACRES OR HECTARES
OCEAN DISPOSAL	D82	GALLONS PER DAY OR LITERS PER DAY
SURFACE IMPOUNDMENT	D83	GALLONS OR LITERS

PROCESS	PROCESS CODE	APPROPRIATE UNITS OF MEASURE FOR PROCESS DESIGN CAPACITY
Treatment:		
TANK	T01	GALLONS PER DAY OR LITERS PER DAY
SURFACE IMPOUNDMENT	T02	GALLONS PER DAY OR LITERS PER DAY
INCINERATOR	T03	TONS PER HOUR OR METRIC TONS PER HOUR; GALLONS PER HOUR OR LITERS PER HOUR
OTHER *(Use for physical, chemical, thermal or biological treatment processes not occurring in tanks, surface impoundments or incinerators. Describe the processes in the space provided; Item III-C.)*	T04	GALLONS PER DAY OR LITERS PER DAY

UNIT OF MEASURE	UNIT OF MEASURE CODE	UNIT OF MEASURE	UNIT OF MEASURE CODE	UNIT OF MEASURE	UNIT OF MEASURE CODE
GALLONS	G	LITERS PER DAY	V	ACRE-FEET	A
LITERS	L	TONS PER HOUR	D	HECTARE-METER	F
CUBIC YARDS	Y	METRIC TONS PER HOUR	W	ACRES	B
CUBIC METERS	C	GALLONS PER HOUR	E	HECTARES	Q
GALLONS PER DAY	U	LITERS PER HOUR	H		

EXAMPLE FOR COMPLETING ITEM III *(shown in line numbers X-1 and X-2 below)*: A facility has two storage tanks, one tank can hold 200 gallons and the other can hold 400 gallons. The facility also has an incinerator that can burn up to 20 gallons per hour.

C DUP 1

LINE NUMBER	A. PROCESS CODE (from list above)	B. PROCESS DESIGN CAPACITY 1. AMOUNT (specify)	B. 2. UNIT OF MEASURE (enter code)	FOR OFFICIAL USE ONLY	LINE NUMBER	A. PROCESS CODE (from list above)	B. PROCESS DESIGN CAPACITY 1. AMOUNT	B. 2. UNIT OF MEASURE (enter code)	FOR OFFICIAL USE ONLY
X-1	S02	600	G		5				
X-2	T03	20	E		6				
1	S01	62,920 (55 x 1144)	G		7				
2	S02	2,379,850	G		8				
3	T01	400,000	U		9				
4	T04	100,000	U		10				

CONTINUE ON REVERSE

Continued from the front.

III. PROCESSES *(continued)*

C. SPACE FOR ADDITIONAL PROCESS CODES OR FOR DESCRIBING OTHER PROCESSES *(code "T04")*. FOR EACH PROCESS ENTERED HERE INCLUDE DESIGN CAPACITY.

Part B
Section A-2
ILD000608471

T01 Physical and Chemical Treatment in Tanks

400,000 GPD

	Codes
Primary Treatment - Physical/Chemical	A1
Pretreatments	
Neutralization	B1
Oxidation	B2
Reduction	B3
Oil Recovery	B4

T04 Sludge dewatering and stabilization 100,000 GPD
Dewatering of sludges following conditioning with polymer and lime, stabilization of sludges produced on-site as well as received in containers and bulk. Stabilization A2

~~S02 Storage Tanks~~ - Includes 128,650 gallons of treatment capacity.

IV. DESCRIPTION OF HAZARDOUS WASTES

A. EPA HAZARDOUS WASTE NUMBER — Enter the four-digit number from 40 CFR, Subpart D for each listed hazardous waste you will handle. If you handle hazardous wastes which are not listed in 40 CFR, Subpart D, enter the four-digit number*(s)* from 40 CFR, Subpart C that describes the characteristics and/or the toxic contaminants of those hazardous wastes.

B. ESTIMATED ANNUAL QUANTITY — For each listed waste entered in column A estimate the quantity of that waste that will be handled on an annual basis. For each characteristic or toxic contaminant entered in column A estimate the total annual quantity of all the non-listed waste*(s)* that will be handled which possess that characteristic or contaminant.

C. UNIT OF MEASURE — For each quantity entered in column B enter the unit of measure code. Units of measure which must be used and the appropriate codes are:

ENGLISH UNIT OF MEASURE	CODE	METRIC UNIT OF MEASURE	CODE
POUNDS	P	KILOGRAMS	K
TONS	T	METRIC TONS	M

If facility records use any other unit of measure for quantity, the units of measure must be converted into one of the required units of measure taking into account the appropriate density or specific gravity of the waste.

D. PROCESSES

1. PROCESS CODES:
   For listed hazardous waste: For each listed hazardous waste entered in column A select the code*(s)* from the list of process codes contained in Item III to indicate how the waste will be stored, treated, and/or disposed of at the facility.
   For non-listed hazardous wastes: For each characteristic or toxic contaminant entered in column A, select the code*(s)* from the list of process codes contained in Item III to indicate all the processes that will be used to store, treat, and/or dispose of all the non-listed hazardous wastes that possess that characteristic or toxic contaminant.
   Note: Four spaces are provided for entering process codes. If more are needed: (1) Enter the first three as described above; (2) Enter "000" in the extreme right box of Item IV-D(1); and (3) Enter in the space provided on page 4, the line number and the additional code*(s)*.
2. PROCESS DESCRIPTION: If a code is not listed for a process that will be used, describe the process in the space provided on the form.

NOTE: HAZARDOUS WASTES DESCRIBED BY MORE THAN ONE EPA HAZARDOUS WASTE NUMBER — Hazardous wastes that can be described by more than one EPA Hazardous Waste Number shall be described on the form as follows:

1. Select one of the EPA Hazardous Waste Numbers and enter it in column A. On the same line complete columns B,C, and D by estimating the total annual quantity of the waste and describing all the processes to be used to treat, store, and/or dispose of the waste.
2. In column A of the next line enter the other EPA Hazardous Waste Number that can be used to describe the waste. In column D(2) on that line enter "included with above" and make no other entries on that line.
3. Repeat step 2 for each other EPA Hazardous Waste Number that can be used to describe the hazardous waste.

EXAMPLE FOR COMPLETING ITEM IV *(shown in line numbers X-1, X-2, X-3, and X-4 below)* — A facility will treat and dispose of an estimated 900 pounds per year of chrome shavings from leather tanning and finishing operation. In addition, the facility will treat and dispose of three non-listed wastes. Two wastes are corrosive only and there will be an estimated 200 pounds per year of each waste. The other waste is corrosive and ignitable and there will be an estimated 100 pounds per year of that waste. Treatment will be in an incinerator and disposal will be in a landfill.

LINE NO.	A. EPA HAZARD. WASTE NO. (enter code)	B. ESTIMATED ANNUAL QUANTITY OF WASTE	C. UNIT OF MEASURE (enter code)	D. PROCESSES 1. PROCESS CODES (enter)	D. PROCESSES 2. PROCESS DESCRIPTION (if a code is not entered in D(1))
X-1	K054	900	P	T03 D80	
	D002	400	P	T03 D80	
X-3	D001	100	P	T03 D80	
X-4	D002				included with above

CONTINUE ON PAGE 3

Please print or type in the unshaded areas only
(fill-in areas are spaced for elite type, i.e., 12 characters/inch).

Form Approved OMB No. 158-R0175

FORM 1 GENERAL

EPA

U.S. ENVIRONMENTAL PROTECTION AGENCY

GENERAL INFORMATION

Consolidated Permits Program

(Read the "General Instructions" before starting.)

EPA I.D. NUMBER: F ILD000608471 D

LABEL ITEMS

I. EPA I.D. NUMBER

III. FACILITY NAME

V. FACILITY MAILING ADDRESS

VI. FACILITY LOCATION

PLEASE PLACE LABEL IN THIS SPACE

GENERAL INSTRUCTIONS

If a preprinted l
it in the designa
ation carefully; i
through it and
appropriate fill-
the preprinted d
left of the lebe
that should appe
proper fill-in are
complete and correct, you need not complete Items I, III, V, and VI *(except VI-B which must be completed regardless)*. Complete all Items if no label has been provided. Refer to the instructions for detailed item descriptions and for the legal authorizations under which this data is collected.

Part - B -
Section A - 3
ILD000608471

II. POLLUTANT CHARACTERISTICS

INSTRUCTIONS: Complete A through J to determine whether you need to submit any permit application forms to the EPA. If you answer "yes" to any questions, you must submit this form and the supplemental form listed in the parenthesis following the question. Mark "X" in the box in the third column if the supplemental form is attached. If you answer "no" to each question, you need not submit any of these forms. You may answer "no" if your activity is excluded from permit requirements; see Section C of the instructions. See also, Section D of the instructions for definitions of bold-faced terms.

SPECIFIC QUESTIONS	MARK 'X' YES	NO	FORM ATTACHED
A. Is this facility a publicly owned treatment works which results in a discharge to waters of the U.S.? (FORM 2A)		X	
B. Does or will this facility *(either existing or proposed)* include a concentrated animal feeding operation or aquatic animal production facility which results in a discharge to waters of the U.S.? (FORM 2B)		X	
C. Is this a facility which currently results in discharges to waters of the U.S. other than those described in A or B above? (FORM 2C)		X	
D. Is this a proposed facility *(other than those described in A or B above)* which will result in a discharge to waters of the U.S.? (FORM 2D)		X	
E. Does or will this facility treat, store, or dispose of hazardous wastes? (FORM 3)	X		
F. Do you or will you inject at this facility industrial or municipal effluent below the lowermost stratum containing, within one quarter mile of the well bore, underground sources of drinking water? (FORM 4)		X	
G. Do you or will you inject at this facility any produced water or other fluids which are brought to the surface in connection with conventional oil or natural gas production, inject fluids used for enhanced recovery of oil or natural gas, or inject fluids for storage of liquid hydrocarbons? (FORM 4)		X	
H. Do you or will you inject at this facility fluids for special processes such as mining of sulfur by the Frasch process, solution mining of minerals, in situ combustion of fossil fuel, or recovery of geothermal energy? (FORM 4)		X	
I. Is this facility a proposed stationary source which is one of the 28 industrial categories listed in the instructions and which will potentially emit 100 tons per year of any air pollutant regulated under the Clean Air Act and may affect or be located in an attainment area? (FORM 5)		X	
J. Is this facility a proposed stationary source which is NOT one of the 28 industrial categories listed in the instructions and which will potentially emit 250 tons per year of any air pollutant regulated under the Clean Air Act and may affect or be located in an attainment area? (FORM 5)		X	

III. NAME OF FACILITY

1 SKIP CHEM CLEAR INC

IV. FACILITY CONTACT

A. NAME & TITLE *(last, first, & title)*	B. PHONE *(area code & no.)*
2 LAUBSTED JAMES PLANT MANAGER	312 646 6202

V. FACILITY MAILING ADDRESS

A. STREET OR P.O. BOX

3 11800 S. STONY ISLAND AVENUE

B. CITY OR TOWN	C. STATE	D. ZIP CODE
4 CHICAGO	IL	60617

VI. FACILITY LOCATION

A. STREET, ROUTE NO. OR OTHER SPECIFIC IDENTIFIER

5 11800 S STONY ISLAND AVENUE

B. COUNTY NAME

COOK

C. CITY OR TOWN	D. STATE	E. ZIP CODE	F. COUNTY CODE *(if known)*
6 CHICAGO	IL	60617	

ONTINUED FROM THE FRONT

Part - B -
Section A - 4
ILD000608471

VII. SIC CODES (4-digit, in order of priority)

A. FIRST		B. SECOND	
4953	(specify) Refuse Collection		(specify)
C. THIRD		**D. FOURTH**	
	(specify)		(specify)

VIII. OPERATOR INFORMATION

A. NAME: CHEM CLEAR INC

B. Is the name listed in Item VIII-A also the owner? [X] YES [ ] NO

C. STATUS OF OPERATOR (Enter the appropriate letter into the answer box; if "Other", specify.)
F = FEDERAL
S = STATE
P = PRIVATE
M = PUBLIC (other than federal or state)
O = OTHER (specify)

P (specify)

D. PHONE (area code & no.): A 215 687 8990

E. STREET OR P.O. BOX: 992 OLD EAGLE SCHOOL ROAD

F. CITY OR TOWN: WAYNE

G. STATE: PA

H. ZIP CODE: 19087

IX. INDIAN LAND

Is the facility located on Indian lands? [ ] YES [X] NO

X. EXISTING ENVIRONMENTAL PERMITS

A. NPDES (Discharges to Surface Water): 9 N	D. PSD (Air Emissions from Proposed Sources): 9 P 031600BTE	81-CH-05 Metropolitan Sewer District
B. UIC (Underground Injection of Fluids): 9 U	E. OTHER (specify): 9 1980-36-OP	(specify) Land (Operations)
C. RCRA (Hazardous Wastes): 9 ILD000608471	E. OTHER (specify): 9 1984-ep-089	(specify) Water (Operations)

XI. MAP

Attach to this application a topographic map of the area extending to at least one mile beyond property bounderies. The map must show the outline of the facility, the location of each of its existing and proposed intake and discharge structures, each of its hazardous waste treatment, storage, or disposal facilities, and each well where it injects fluids underground. Include all springs, rivers and other surface water bodies in the map area. See instructions for precise requirements.

XII. NATURE OF BUSINESS (provide a brief description)

The Chicago facility of ChemClear, Inc. offers a liquid industrial waste pretreatment service. ChemClear takes in hazardous and non-hazardous wastewaters which do not meet sewer discharge specifications. Through physical and chemical treatment ChemClear produces an effluent acceptable for sewer discharge and a dewatered sludge. The effluent is discharged into the Metropolitan Sanitary District of Greater Chicago sewer system and the sludge is disposed of in a hazardous waste landfill.

XIII. CERTIFICATION (see instructions)

I certify under penalty of law that I have personally examined and am familiar with the information submitted in this application and all attachments and that, based on my inquiry of those persons immediately responsible for obtaining the information contained in the application, I believe that the information is true, accurate and complete. I am aware that there are significant penalties for submitting false information, including the possibility of fine and imprisonment.

A. NAME & OFFICIAL TITLE (type or print)	B. SIGNATURE	C. DATE SIGNED
Arun Lakhani, V.P. of Engineering	Arun Lakhani	4/30/87

COMMENTS FOR OFFICIAL USE ONLY

Continued from the front.

IV. DESCRIPTION OF HAZARDOUS WASTES *(continued)*

E. USE THIS SPACE TO LIST ADDITIONAL PROCESS CODES FROM ITEM D(1) ON PAGE 3.

Part B -
Section A - 5
ILD000608471

EPA I.D. NO. *(enter from page 1)*	
F ILD000608471	T/N C 16

V. FACILITY DRAWING

All existing facilities must include in the space provided on page 5 a scale drawing of the facility *(see instructions for more detail)*.

VI. PHOTOGRAPHS

All existing facilities must include photographs *(aerial or ground—level)* that clearly delineate all existing structures; existing storage, treatment and disposal areas; and sites of future storage, treatment or disposal areas *(see instructions for more detail)*.

VII. FACILITY GEOGRAPHIC LOCATION

LATITUDE *(degrees, minutes, & seconds)*	LONGITUDE *(degrees, minutes, & seconds)*
41 40 44	87 34 46

VIII. FACILITY OWNER

☐ A. If the facility owner is also the facility operator as listed in Section VIII on Form 1, "General Information", place an "X" in the box to the left and skip to Section IX below.

B. If the facility owner is not the facility operator as listed in Section VIII on Form 1, complete the following items:

1. NAME OF FACILITY'S LEGAL OWNER	2. PHONE NO. *(area code & no.)*
E Chem-Clear, Inc.	215-687-8900

3. STREET OR P.O. BOX	4. CITY OR TOWN	5. ST.	6. ZIP CODE
F 992 Old Eagle School Road	G Wayne,	PA	19087

IX. OWNER CERTIFICATION

I certify under penalty of law that I have personally examined and am familiar with the information submitted in this and all attached documents, and that based on my inquiry of those individuals immediately responsible for obtaining the information, I believe that the submitted information is true, accurate, and complete. I am aware that there are significant penalties for submitting false information, including the possibility of fine and imprisonment.

A. NAME *(print or type)*	B. SIGNATURE	C. DATE SIGNED
Arun Lakhani, V.P. of Engineering	Arun Lakhani	4/30/87

X. OPERATOR CERTIFICATION

I certify under penalty of law that I have personally examined and am familiar with the information submitted in this and all attached documents, and that based on my inquiry of those individuals immediately responsible for obtaining the information, I believe that the submitted information is true, accurate, and complete. I am aware that there are significant penalties for submitting false information, including the possibility of fine and imprisonment.

A. NAME *(print or type)*	B. SIGNATURE	C. DATE SIGNED
Arun Lakhani, V.P. of Engineering	Arun Lakhani	4/30/87

 CONTINUE ON PAGE 5

Part B - 13
Section A - 6
ILD000608471

Form Approved OMB No. 158-S80004

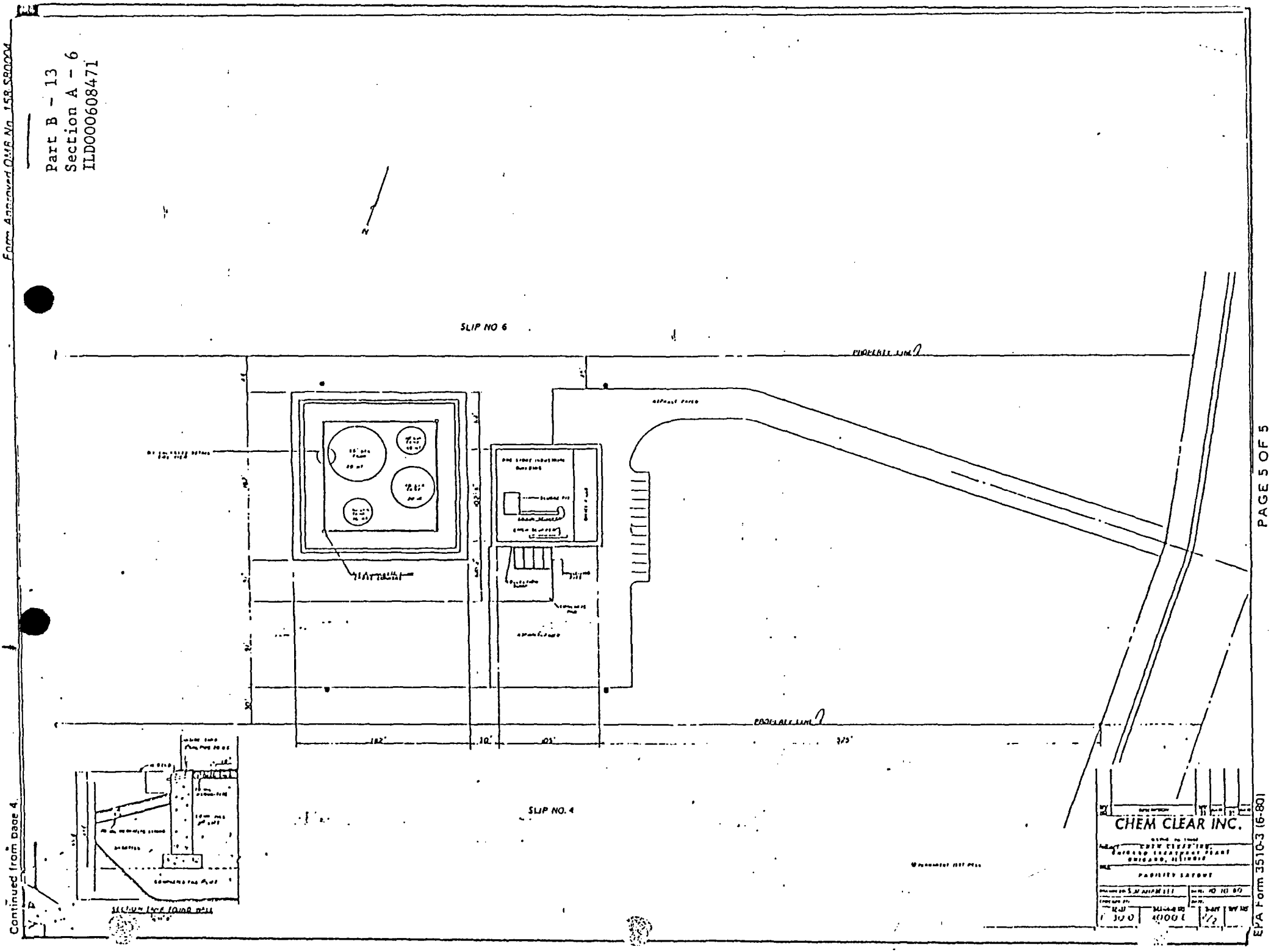

Continued from page 4.

EPA Form 3510-3 (6-80)

ntinued from page 2.

TE: Photocopy this page before completing if you have more than 26 wastes to list. *Form Approv*

EPA I.D. NUMBER (enter from page 1)	FOR OFFICIAL USE ONLY
I L D 0 0 0 6 0 8 4 7 1 — T/A C: 1	S: W — DUP — T/A C: 2 — DUP

Part B
Section A- 7
ILD 000608471
March, 1987

SCRIPTION OF HAZARDOUS WASTES (continued)

LINE NO.	A. EPA HAZARD. WASTE NO. (enter code)	B. ESTIMATED ANNUAL QUANTITY OF WASTE	C. UNIT OF MEASURE (enter code)	D. PROCESSES 1. PROCESS CODES (enter)	D. PROCESSES 2. PROCESS DESCRIPTION (if a code is not entered in D(1))
1	D 0 0 1	7500	T	T 0 1 T 0 4 S 0 2	A1
2	D 0 0 1				B 4
3	D 0 0 2	40,000	T	T 0 1 T 0 4 S 0 2	A1
4	D 0 0 2				B1
5					
6	D 0 0 2	1500	T	T 0 4	A2
7	D 0 0 3 D 0 0 3	2000	T	T 0 1 T 0 4 S 0 2	B2
8	D 0 0 3	400	T	T 0 4	A2
9	D 0 0 4	1000	T	T 0 1 T 0 4 S 0 2	A1
10	D 0 0 4				B4
11	D 0 0 4	100	T	T 0 4	A2
12	D 0 0 5	200	T	T 0 1 T 0 4 S 0 2	A1
13	D 0 0 5				B4
14	D 0 0 5	100	T	T 0 4	A2
15	D 0 0 6	1000	T	T 0 1 T 0 4 S 0 2	A1
16	D 0 0 6				B 4
17	D 0 0 6	200	T	T 0 4	A2
18	D 0 0 7	35,000	T	T 0 1 T 0 4 S 0 2	A1
19	D 0 0 7				B3
20	D 0 0 7				B 4
21	D 0 0 7	1500	T	T 0 4	A2
22	D 0 0 8	4000	T	T 0 1 T 0 4 S 0 2	A1
23	D 0 0 8				B 4
24	D 0 0 8	400	T	T 0 4	A2
25	D 0 0 9	100	T	T 0 1 T 0 4 S 0 2	A1
26	D 0 0 9				B4

CONTINUE ON REVERSE

(enter "A", "B", "C", etc. behind the "3" to identify photocopied pages)

ontinued from page 2.

OTE: Photocopy this page before completing if you have more than 26 wastes to list.

Approved OMB No. 158-S80004

EPA I.D. NUMBER (enter from page 1): VILD000608471 (T/A: 1, C: 1)

FOR OFFICIAL USE ONLY: W DUP (T/A: 2, C: DUP)

TLD000060847

IV. DESCRIPTION OF HAZARDOUS WASTES (continued)

LINE NO.	A. EPA HAZARD. WASTE NO. (enter code)	B. ESTIMATED ANNUAL QUANTITY OF WASTE	C. UNIT OF MEASURE (enter code)	D. PROCESSES 1. PROCESS CODES (enter)	D. PROCESSES 2. PROCESS DESCRIPTION (if a code is not entered in D(1))
1	D009	40	T	T04	A2
2	D010	100	T	T01 T04 S02	A1
3	D010				B4
4	D010	40	T	T04	A2
5	D011	100	T	T01 T04 S02	A1
6	D011	40	T	T04	A2
7	D012	1000	T	T01 T04 S02	A1
8	D013	1000	T	T01 T04 S02	A1
9	D014	1000	T	T01 T04 S02	A1
10	D015	1000	T	T01 T04 S02	A1
11	D016	1000	T	T01 T04 S02	A1
12	D017	1000	T	T01 T04 S02	A1
13	F001	400	T	T01 T04 S02	A1
14	F002	400	T	T01 T04 S02	A1
15	F003	400	T	T01 T04 S02	A1
16	F004	40	T	T01 T04 S02	A1
17	F005	60000	T	T01 T04 S02	A1
18	F006	10000	T	T01 T04 S02	A1
19	F006				B3
20	F006	2000	T	T04	A2
21	F007	300	T	T01 T04 S02	B2
22	F007	40	T	T04	A2
23	F008	100	T	T01 T04 S02	B2
24	F008	200	T	T04	A2
25	F009	100	T	T01 T04 S02	B2
26	F009	40	T	T04	A2

ontinued from page 2.

OTE: Photocopy this page before completing if you have more than 26 wastes to list.

Approved OMB No. 158-S80004

EPA I.D. NUMBER (enter from page 1): W I L D 0 0 0 6 0 8 4 7 1 T/A C 1

FOR OFFICIAL USE ONLY: W DUP T/A C 2 DUP

TLD000060847

IV. DESCRIPTION OF HAZARDOUS WASTES (continued)

LINE NO.	A. EPA HAZARD. WASTE NO. (enter code)	B. ESTIMATED ANNUAL QUANTITY OF WASTE	C. UNIT OF MEASURE (enter code)	D. PROCESSES 1. PROCESS CODES (enter)				D. PROCESSES 2. PROCESS DESCRIPTION (if a code is not entered in D(1))
1	F 0 1 0	100	T	T 0 1	T 0 4	S 0 2		B2
2	F 0 1 0	40	T	T 0 4				A2
3	F 0 1 1	100	T	T 0 1	T 0 4	S 0 2		B2
4	F 0 1 1	40	T	T 0 4				A2
5	F 0 1 2	40	T	T 0 1	T 0 4	S 0 2		B2
6	F 0 1 2	40	T	T 0 4				A2
7	F 0 1 9	80	%	T 0 1	T 0 4	S 0 2		A1
8	F 0 1 9							B3
9	F 0 1 9	40	T	T 0 4				A2
10	F 0 2 4	40	T	T 0 1	T 0 4	S 0 2		A1
11	F 0 3 0	20000	T	T 0 1	T 0 4	S 0 2		B4
12	K 0 0 2	40	T	T 0 1	T 0 4	S 0 2		A1
13	K 0 0 2							B3
14	K 0 0 2	40	T	T 0 4				A2
15	K 0 0 3	40	T	T 0 1	T 0 4	S 0 2		A1
16	K 0 0 3							B3
17	K 0 0 3	40	T	T 0 4				A2
18	K 0 0 4	40	T	T 0 1	T 0 4	S 0 2		B3
19	K 0 0 4	40	T	T 0 4				A2
20	K 0 0 5	40	T	T 0 1	T 0 4	S 0 2		A1
21	K 0 0 5							B3
22	K 0 0 5	40	T	T 0 4				A2
23	K 0 0 6	40	T	T 0 1	T 0 4	S 0 2		B3
24	K 0 0 6	40	T	T 0 4				A2
25	K 0 0 7	40	T	T 0 1	T 0 4	S 0 2		B3
26	K 0 0 7	40	T	T 0 4				A2

Continued from page 2.

NOTE: Photocopy this page before completing if you have more than 26 wastes to list.

Form Approved OMB No. 158-S80004

EPA I.D. NUMBER (enter from page 1)	FOR OFFICIAL USE ONLY	
W I L D 0 0 0 6 0 8 4 7 1 — T/A 1	W DUP — T/A 2 DUP	TLD000060847

IV. DESCRIPTION OF HAZARDOUS WASTES (continued)

LINE NO.	A. EPA HAZARD. WASTE NO. (enter code)	B. ESTIMATED ANNUAL QUANTITY OF WASTE	C. UNIT OF MEASURE (enter code)	D. PROCESSES 1. PROCESS CODES (enter)	D. PROCESSES 2. PROCESS DESCRIPTION (if a code is not entered in D(1))
	23 - 26	27 - 35	36	27 - 29 / 27 - 29 / 27 - 29 / 27 - 29	
1	K008	40	T	T01 T04 S02	B3
2	K008	40	T	T04	A2
3	K048	160	T	T01 T04 S02	A1
4	K048				B3
5	K048				B4
6	K048	40	T	T04	A2
7	K049	180	T	T01 T04 S02	A1
8	K049				B3
9	K049				B4
10	K049	40	T	T04	A2
11	K050	160	T	T01 T04 S02	B3
12	K050				B4
13	K050	40	T	T04	A2
14	K051	160	T	T01 T04 S02	A1
15	K051				B3
16	K051				B4
17	K051	40	T	T04	A2
18	K052	160	T	T01 T04 S02	A1
19	K052				B4
20	K052	40	T	T04	A2
21	K061	40	T	T01 T04 S02	A1
22	K061				B3
23	K062	4000	T	T01 T04 S02	A1
24	K062				B3
25	K069	40	T	T01 T04 S02	A1
26	K069				B3

ntinued from page 2.

OTE: Photocopy this page before completing if you have more than 26 wastes to list.

Approved OMB No. 158-S80004

EPA I.D. NUMBER (enter from page 1): ILD000608471 T/A 1 C 1

FOR OFFICIAL USE ONLY: S W DUP T/A 2 C DUP

TLD000060847

V. DESCRIPTION OF HAZARDOUS WASTES (continued)

LINE NO.	A. EPA HAZARD. WASTE NO. (enter code)	B. ESTIMATED ANNUAL QUANTITY OF WASTE	C. UNIT OF MEASURE (enter code)	D. PROCESSES 1. PROCESS CODES (enter)				2. PROCESS DESCRIPTION (if a code is not entered in D(1))
1	K071	40	T	T01	T04	S02		A1
2	K071	40	T	T04				A2
3	K073	40	T	T04				A2
4	K084	40	T	T01	T04	S02		A1
5	K084	40	T	T04				A2
6	K085	40	T	T04				A2
7	K086	1000	T	T01	T04	S02		A1
8	K086							B3
9	K086	40	T	T04				A2
10	K100	40	T	T01	T04	S02		A1
11	K100							B3
12	K100	40	T	T04				A2
13	K101	40	T	T01	T04	S02		A1
14	K101	40	T	T04				A2
15	K102	40	T	T01	T04	S02		A1
16	K102	40	T	T04				A2
17	K106	40	T	T01	T04	S02		A1
18	K106	40	T	T04				A2
19	P004	40	T	T01	T04	S02		A1
20	P011	40	T	T01	T04	S02		A1
21	P012	40	T	T01	T04	S02		A1
22	P013	40	T	T01	T04	S02		B2
23	P030	40	T	T01	T04	S02		B2
24	P037	40	T	T01	T04	S02		A1
25	P048	40	T	T01	T04	S02		A1
26	P050	40	T	T01	T04	S02		A1

ontinued from page 2.

IOTE: Photocopy this page before completing if you have more than 26 wastes to list.

m Approved OMB No. 158-S80004

EPA I.D. NUMBER (enter from page 1)		FOR OFFICIAL USE ONLY	
W I L D 0 0 0 6 0 8 4 7 1	T/A C 1	W DUP	T/A C 2 DUP

ID000060847

IV. DESCRIPTION OF HAZARDOUS WASTES (continued)

LINE NO.	A. EPA HAZARD. WASTE NO. (enter code)	B. ESTIMATED ANNUAL QUANTITY OF WASTE	C. UNIT OF MEASURE (enter code)	D. PROCESSES 1. PROCESS CODES (enter)	D. PROCESSES 2. PROCESS DESCRIPTION (if a code is not entered in D(1))
1	P051	1000	T	T01 T04 S02	A1
2	P059	40	T	T01 T04 S02	A1
3	P098	40	T	T01 T04 S02	B2
4	P099	40	T	T01 T04 S02	B2
5	P104	40	T	T01 T04 S02	B2
6	P106	40	T	T01 T04 S02	B2
7	U002	40	T	T01 T04 S02	A1
8	U003	40	T	T01 T04 S02	A1
9	U007	1000	T	T01 T04 S02	A1
10	U009	40	T	T01 T04 S02	A1
11	U019	40	T	T01 T04 S02	A1
12	U024	40	T	T01 T04 S02	A1
13	U027	40	T	T01 T02 S02	A1
14	U028	40	T	T01 T04 S02	A1
15	U029	40	T	T01 T04 S02	A1
16	U031	40	T	T01 T04 S02	A1
17	U032	40	T	T01 T04 S02	B3
18	U036	40	T	T01 T04 S02	A1
19	U037	40	T	T01 T04 S02	A1
20	U039	40	T	T01 T04 S02	A1
21	U042	40	T	T01 T04 S02	A1
22	U043	40	T	T01 T04 S02	A1
23	U044	40	T	T01 T04 S02	A1
24	U045	40	T	T01 T04 S02	A1
25	U048	40	T	T01 T04 S02	A1
26	U068	40	T	T01 T04 S02	A1

ontinued from page 2.

OTE: Photocopy this page before completing if you have more than 26 wastes to list.

orm Approved OMB No. 158-S80004

EPA I.D. NUMBER *(enter from page 1)*: W I L D 0 0 0 6 0 8 4 7 1 — T/A 1 — C 1

FOR OFFICIAL USE ONLY: W DUP — T/A 2 — C DUP

TLD000060847

IV. DESCRIPTION OF HAZARDOUS WASTES *(continued)*

LINE NO.	A. EPA HAZARD. WASTE NO. *(enter code)*	B. ESTIMATED ANNUAL QUANTITY OF WASTE	C. UNIT OF MEASURE *(enter code)*	D. PROCESSES 1. PROCESS CODES *(enter)*	D. PROCESSES 2. PROCESS DESCRIPTION *(if a code is not entered in D(1))*
1	U069	40	T	T01 T04 S02	A1
2	U070	40	T	T01 T04 S02	A1
3	U071	40	T	T01 T04 S02	A1
4	U072	40	T	T01 T04 S02	A1
5	U073	40	T	T01 T04 S02	A1
6	U075	40	T	T01 T04 S02	A1
7	U076	40	T	T01 T04 S02	A1
8	U077	40	T	T01 T04 S02	A1
9	U078	40	T	T01 T04 S02	A1
10	U079	40	T	T01 T04 S02	A1
11	U080	40	T	T01 T04 S02	A1
12	U081	40	T	T01 T04 S02	A1
13	U083	40	T	T01 T04 S02	A1
14	U084	40	T	T01 T04 S02	A1
15	U088	40	T	T01 T04 S02	A1
16	U101	40	T	T01 T04 S02	A1
17	U102	40	T	T01 T04 S02	A1
18	U105	50	T	T01 T04 S02	A1
19	U107	40	T	T01 T04 S02	A1
20	U109	40	T	T01 T04 S02	A1
21	U111	40	T	T01 T04 S02	A1
22	U112	40	T	T01 T01 S02	A1
23	U117	40	T	T01 T04 S02	A1
24	U121	40	T	T01 T04 S02	A1
25	U129	1000	T	T01 T04 S02	A1
26	U130	40	T	T01 T04 S02	A1

ntinued from page 2.
OTE: Photocopy this page before completing if you have more than 26 wastes to list. Form Approved OMB No. 158-S80004

EPA I.D. NUMBER (enter from page 1)		FOR OFFICIAL USE ONLY	
ILD000608471	T/A 1	W DUP	T/A 2 DUP

V. DESCRIPTION OF HAZARDOUS WASTES (continued)

LINE NO.	A. EPA HAZARD. WASTE NO. (enter code)	B. ESTIMATED ANNUAL QUANTITY OF WASTE	C. UNIT OF MEASURE (enter code)	D. PROCESSES 1. PROCESS CODES (enter)				2. PROCESS DESCRIPTION (If a code is not entered in D(1))
1	U131	40	T	T01	T04	S02		A1
2	U144	40	T	T01	T04	S02		A1
3	U145	40	T	T01	T04	S02		A1
4	U146	40	T	T01	T04	S02		A1
5	U154	40	T	T01	T04	S02		A1
6	U159	40	T	T01	T04	S02		A1
7	U161	40	T	T01	T04	S02		A1
8	U165	40	T	T01	T04	S02		A1
9	U169	40	T	T01	T04	S02		A1
10	U170	40	T	T01	T04	S02		A1
11	U187	40	T	T01	T04	S02		A1
12	U188	40	T	T01	T04	S02		B2
13	U188	160	T	T01	T04	S02		A1
14	U196	40	T	T01	T04	S02		A1
15	U209	40	T	T01	T04	S02		A1
16	U210	40	T	T01	T04	S02		A1
17	U211	40	T	T01	T04	S02		A1
18	U213	40	T	T01	T04	S02		A1
19	U220	40	T	T01	T04	S02		A1
20	U221	40	T	T01	T04	S02		A1
21	U225	40	T	T01	T04	S02		A1
22	U226	40	T	T01	T04	S02		A1
23	U227	40	T	T01	T04	S02		A1
24	U228	40	T	T01	T04	S02		A1
25	U246	40	T	T01	T04	S02		A1
26								

Continued from page 2.

NOTE: Photocopy this page before completing if you have more than 26 wastes to list.

Form Approved OMB No. 158-S80004

EPA I.D. NUMBER (enter from page 1)	FOR OFFICIAL USE ONLY	
WILD 0 0 0 6 0 8 4 7 1 T/A/C 1	W DUP T/A/C 2 DUP	ILD000608471

IV. DESCRIPTION OF HAZARDOUS WASTES (continued)

LINE NO.	A. EPA HAZARD. WASTE NO. (enter code)	B. ESTIMATED ANNUAL QUANTITY OF WASTE	C. UNIT OF MEASURE (enter code)	D. PROCESSES 1. PROCESS CODES (enter)	D. PROCESSES 2. PROCESS DESCRIPTION (if a code is not entered in D(1))
1	D001	8000	T	S01	For Storage and Transfer Only
2	D002	8000	T	S01	For Storage and Transfer Only
3	D003	2000	T	S01	For Storage and Transfer Only
4	D004	800	T	S01	For Storage and Transfer Only
5	D005	1000	T	S01	For Storage and Transfer Only
6	D006	1000	T	S01	For Storage and Transfer Only
7	D007	1000	T	S01	For Storage and Transfer Only
8	D008	1000	T	S01	For Storage and Transfer Only
9	D009	800	T	S01	For Storage and Transfer Only
10	D010	800	T	S01	For Storage and Transfer Only
11	D011	800	T	S01	For Storage and Transfer Only
12	D012	400	T	S01	For Storage and Transfer Only
13	D013	400	T	S01	For Storage and Transfer Only
14	D014	400	T	S01	For Storage and Transfer Only
15	D015	400	T	S01	For Storage and Transfer Only
16	D016	400	T	S01	For Storage and Transfer Only
17	D017	400	T	S01	For Storage and Transfer Only
18	F001	8000	T	S01	For Storage and Transfer Only
19	F002	8000	T	S01	For Storage and Transfer Only
20	F003	8000	T	S01	For Storage and Transfer Only
21	F004	8000	T	S01	For Storage and Transfer Only
22	F005	8000	T	S01	For Storage and Transfer Only
23	F006	2000	T	S01	For Storage and Transfer Only
24	F007	2000	T	S01	For Storage and Transfer Only
25	F008	2000	T	S01	For Storage and Transfer Only
26	F009	2000	T	S01	For Storage and Transfer Only

(enter "A", "B", "C", etc. behind the "3" to identify photocopied pages)

Continued from page 2.

NOTE: Photocopy this page before completing if you have more than 26 wastes to list.

Form Approved OMB No. 158-S30004

EPA I.D. NUMBER (enter from page 1)	FOR OFFICIAL USE ONLY	
WILD000608471	W DUP 2 DUP	ILD000608471

IV. DESCRIPTION OF HAZARDOUS WASTES (continued)

LINE NO.	A. EPA HAZARD. WASTE NO. (enter code)	B. ESTIMATED ANNUAL QUANTITY OF WASTE	C. UNIT OF MEASURE (enter code)	D. PROCESSES 1. PROCESS CODES (enter)	D. PROCESSES 2. PROCESS DESCRIPTION (if a code is not entered in D(1))
1	F010	2000	T	S01	For Storage and Transfer Only
2	F011	2000	T	S01	For Storage and Transfer Only
3	F012	2000	T	S01	For Storage and Transfer Only
4	F019	2000	T	S01	For Storage and Transfer Only
5	K001	80	T	S01	For Storage and Transfer Only
6	K002	80	T	S01	For Storage and Transfer Only
7	K003	80	T	S01	For Storage and Transfer Only
8	K004	80	T	S01	For Storage and Transfer Only
9	K005	80	T	S01	For Storage and Transfer Only
10	K006	80	T	S01	For Storage and Transfer Only
11	K007	80	T	S01	For Storage and Transfer Only
12	K008	80	T	S01	For Storage and Transfer Only
13	K009	80	T	S01	For Storage and Transfer Only
14	K010	80	T	S01	For Storage and Transfer Only
15	K011	80	T	S01	For Storage and Transfer Only
16	K012	80	T	S01	For Storage and Transfer Only
17	K013	80	T	S01	For Storage and Transfer Only
18	K014	80	T	S01	For Storage and Transfer Only
19	K015	80	T	S01	For Storage and Transfer Only
20	K016	80	T	S01	For Storage and Transfer Only
21	K017	80	T	S01	For Storage and Transfer Only
22	K018	80	T	S01	For Storage and Transfer Only
23	K019	80	T	S01	For Storage and Transfer Only
24	K020	80	T	S01	For Storage and Transfer Only
25	K021	80	T	S01	For Storage and Transfer Only
26	K022	80	T	S01	For Storage and Transfer Only

(enter "A", "B", "C", etc. behind the "3" to identify photocopied pages)

Continued from page 2.

NOTE: Photocopy this page before completing if you have more than 26 wastes to list.

Form Approved OMB No. 158-S80004

EPA I.D. NUMBER (enter from page 1)	FOR OFFICIAL USE ONLY	
WILD006084711	W DUP 2 DUP	ILD000608471

IV. DESCRIPTION OF HAZARDOUS WASTES (continued)

LINE NO.	A. EPA HAZARD. WASTE NO. (enter code)	B. ESTIMATED ANNUAL QUANTITY OF WASTE	C. UNIT OF MEASURE (enter code)	D. PROCESSES 1. PROCESS CODES (enter)	D. PROCESSES 2. PROCESS DESCRIPTION (if a code is not entered in D(1))
1	K023	80	T	S01	For Storage and Transfer Only
2	K024	80	T	S01	For Storage and Transfer Only
3	K025	80	T	S01	For Storage and Transfer Only
4	K026	80	T	S01	For Storage and Transfer Only
5	K027	80	T	S01	For Storage and Transfer Only
6	K028	80	T	S01	For Storage and Transfer Only
7	K029	80	T	S01	For Storage and Transfer Only
8	K030	80	T	S01	For Storage and Transfer Only
9	K031	80	T	S01	For Storage and Transfer Only
10	K032	80	T	S01	For Storage and Transfer Only
11	K033	80	T	S01	For Storage and Transfer Only
12	K034	80	T	S01	For Storage and Transfer Only
13	K035	80	T	S01	For Storage and Transfer Only
14	K036	80	T	S01	For Storage and Transfer Only
15	K037	80	T	S01	For Storage and Transfer Only
16	K038	80	T	S01	For Storage and Transfer Only
17	K039	80	T	S01	For Storage and Transfer Only
18	K040	80	T	S01	For Storage and Transfer Only
19	K041	80	T	S01	For Storage and Transfer Only
20	K042	80	T	S01	For Storage and Transfer Only
21	K043	80	T	S01	For Storage and Transfer Only
22	K044	80	T	S01	For Storage and Transfer Only
23	K045	80	T	S01	For Storage and Transfer Only
24	K046	80	T	S01	For Storage and Transfer Only
25	K047	80	T	S01	For Storage and Transfer Only
26	K048	80	T	S01	For Storage and Transfer Only

(enter "A", "B", "C", etc. behind the "3" to identify photocopied pages)

Continued from page 2.

NOTE: Photocopy this page before completing if you have more than 26 wastes to list.

Form Approved OMB No. 158-S80004

EPA I.D. NUMBER (enter from page 1)	FOR OFFICIAL USE ONLY	
W I L D 0 0 0 6 0 8 4 7 1 T/A/C 1	W DUP T/A/C 2	DUP

ILD000608471

IV. DESCRIPTION OF HAZARDOUS WASTES (continued)

LINE NO.	A. EPA HAZARD. WASTE NO. (enter code)	B. ESTIMATED ANNUAL QUANTITY OF WASTE	C. UNIT OF MEASURE (enter code)	D. PROCESSES 1. PROCESS CODES (enter)	D. PROCESSES 2. PROCESS DESCRIPTION (if a code is not entered in D(1))
1	K 0 4 9	80	T	S 0 1	For Storage and Transfer Only
2	K 0 5 0	80	T	S 0 1	For Storage and Transfer Only
3	K 0 5 1	80	T	S 0 1	For Storage and Transfer Only
4	K 0 5 2	80	T	S 0 1	For Storage and Transfer Only
5	K 0 6 0	80	T	S 0 1	For Storage and Transfer Only
6	K 0 6 1	80	T	S 0 1	For Storage and Transfer Only
7	K 0 6 2	80	T	S 0 1	For Storage and Transfer Only
8	K 0 6 9	80	T	S 0 1	For Storage and Transfer Only
9	K 0 7 1	80	T	S 0 1	For Storage and Transfer Only
10	K 0 7 3	80	T	S 0 1	For Storage and Transfer Only
11	K 0 8 3	80	T	S 0 1	For Storage and Transfer Only
12	K 0 8 4	80	T	S 0 1	For Storage and Transfer Only
13	K 0 8 5	80	T	S 0 1	For Storage and Transfer Only
14	K 0 8 6	80	T	S 0 1	For Storage and Transfer Only
15	K 0 8 7	80	T	S 0 1	For Storage and Transfer Only
16	K 0 9 3	80	T	S 0 1	For Storage and Transfer Only
17	K 0 9 4	80	T	S 0 1	For Storage and Transfer Only
18	K 0 9 5	80	T	S 0 1	For Storage and Transfer Only
19	K 0 9 6	80	T	S 0 1	For Storage and Transfer Only
20	K 0 9 7	80	T	S 0 1	For Storage and Transfer Only
21	K 0 9 8	80	T	S 0 1	For Storage and Transfer Only
22	K 0 9 9	80	T	S 0 1	For Storage and Transfer Only
23	K 1 0 0	80	T	S 0 1	For Storage and Transfer Only
24	K 1 0 1	80	T	S 0 1	For Storage and Transfer Only
25	K 1 0 2	80	T	S 0 1	For Storage and Transfer Only
26	K 1 0 3	80	T	S 0 1	For Storage and Transfer Only

CONTINUE ON REVERSE

(enter "A", "B", "C", etc. behind the "3" to identify photocopied pages)

Continued from page 2.

NOTE: Photocopy this page before completing if you have more than 26 wastes to list.

Form Approved OMB No. 158-S30004

EPA I.D. NUMBER (enter from page 1)	FOR OFFICIAL USE ONLY	
WILD0006084711	W DUP 2 DUP	ILD000608471

IV. DESCRIPTION OF HAZARDOUS WASTES (continued)

LINE NO.	A. EPA HAZARD. WASTE NO. (enter code)	B. ESTIMATED ANNUAL QUANTITY OF WASTE	C. UNIT OF MEASURE (enter code)	D. PROCESSES 1. PROCESS CODES (enter)	D. PROCESSES 2. PROCESS DESCRIPTION (if a code is not entered in D(1))
1	K104	80	T	S01	For Storage and Transfer Only
2	K105	80	T	S01	For Storage and Transfer Only
3	K106	80	T	S01	For Storage and Transfer Only
4	U001	80	T	S01	For Storage and Transfer Only
5	U002	80	T	S01	For Storage and Transfer Only
6	U003	80	T	S01	For Storage and Transfer Only
7	U004 U007	80 80	T T	S01 S01	For Storage and Transfer Only For Storage and Transfer Only
8	U008	80	T	S01	For Storage and Transfer Only
9	U020	80	T	S01	For Storage and Transfer Only
10	U024	80	T	S01	For Storage and Transfer Only
11	U025	80	T	S01	For Storage and Transfer Only
12	U026	80	T	S01	For Storage and Transfer Only
13	U027	80	T	S01	For Storage and Transfer Only
14	U028	80	T	S01	For Storage and Transfer Only
15	U030	80	T	S01	For Storage and Transfer Only
16	U031	80	T	S01	For Storage and Transfer Only
17	U032	80	T	S01	For Storage and Transfer Only
18	U034	80	T	S01	For Storage and Transfer Only
19	U036	80	T	S01	For Storage and Transfer Only
20	U037	80	T	S01	For Storage and Transfer Only
21	U039	80	T	S01	For Storage and Transfer Only
22	U040	80	T	S01	For Storage and Transfer Only
23	U044	80	T	S01	For Storage and Transfer Only
24	U045	80	T	S01	For Storage and Transfer Only
25	U047	80	T	S01	For Storage and Transfer Only
26	U048	80	T	S01	For Storage and Transfer Only

CONTINUE ON REVERSE

(enter "A", "B", "C", etc. behind the "3" to identify photocopied pages)

Continued from page 2.

NOTE: Photocopy this page before completing if you have more than 26 wastes to list.

Form Approved OMB No. 158-S80004

EPA I.D. NUMBER (enter from page 1)	FOR OFFICIAL USE ONLY	
W I L D 0 0 0 6 0 8 4 7 1 — T/A/C 1	W DUP — T/A/C 2 DUP	IND000608471

IV. DESCRIPTION OF HAZARDOUS WASTES (continued)

LINE NO.	A. EPA HAZARD. WASTE NO. (enter code)	B. ESTIMATED ANNUAL QUANTITY OF WASTE	C. UNIT OF MEASURE (enter code)	D. PROCESSES 1. PROCESS CODES (enter)	D. PROCESSES 2. PROCESS DESCRIPTION (if a code is not entered in D(1))
1	U 0 4 9	80	T	S 0 1	For Storage and Transfer Only
2	U 0 5 1	80	T	S 0 1	For Storage and Transfer Only
3	U 0 5 2	80	T	S 0 1	For Storage and Transfer Only
4	U 0 5 4	80	T	S 0 1	For Storage and Transfer Only
5	U 0 5 5	80	T	S 0 1	For Storage and Transfer Only
6	U 0 5 6	80	T	S 0 1	For Storage and Transfer Only
7	U 0 5 7	80	T	S 0 1	For Storage and Transfer Only
8	U 0 5 8	80	T	S 0 1	For Storage and Transfer Only
9	U 0 6 0	80	T	S 0 1	For Storage and Transfer Only
10	U 0 6 1	80	T	S 0 1	For Storage and Transfer Only
11	U 0 6 8	80	T	S 0 1	For Storage and Transfer Only
12	U 0 6 9	80	T	S 0 1	For Storage and Transfer Only
13	U 0 7 0	80	T	S 0 1	For Storage and Transfer Only
14	U 0 7 1	80	T	S 0 1	For Storage and Transfer Only
15	U 0 7 2	80	T	S 0 1	For Storage and Transfer Only
16	U 0 7 5	80	T	S 0 1	For Storage and Transfer Only
17	U 0 7 6	80	T	S 0 1	For Storage and Transfer Only
18	U 0 7 7	80	T	S 0 1	For Storage and Transfer Only
19	U 0 7 8	80	T	S 0 1	For Storage and Transfer Only
20	U 0 7 9	80	T	S 0 1	For Storage and Transfer Only
21	U 0 8 0	80	T	S 0 1	For Storage and Transfer Only
22	U 0 8 1	80	T	S 0 1	For Storage and Transfer Only
23	U 0 8 2	80	T	S 0 1	For Storage and Transfer Only
24	U 0 8 3	80	T	S 0 1	For Storage and Transfer Only
25	U 0 8 4	80	T	S 0 1	For Storage and Transfer Only
26	U 0 8 8	80	T	S 0 1	For Storage and Transfer Only

CONTINUE ON REVERSE

(enter "A", "B", "C", etc. behind the "3" to identify photocopied pages)

Continued from page 2.

NOTE: Photocopy this page before completing if you have more than 26 wastes to list.

Form Approved OMB No. 158-S80004

EPA I.D. NUMBER (enter from page 1)	FOR OFFICIAL USE ONLY	
WIL D 0 0 0 6 0 8 4 7 1 T/A/C 1	W DUP T/A/C 2 DUP	ILD000608471

IV. DESCRIPTION OF HAZARDOUS WASTES (continued)

LINE NO.	A. EPA HAZARD. WASTE NO. (enter code)	B. ESTIMATED ANNUAL QUANTITY OF WASTE	C. UNIT OF MEASURE (enter code)	D. PROCESSES 1. PROCESS CODES (enter)	D. PROCESSES 2. PROCESS DESCRIPTION (if a code is not entered in D(1))
1	U102	80	T	S01	For Storage and Transfer Only
2	U104	80	T	S01	For Storage and Transfer Only
3	U107	80	T	S01	For Storage and Transfer Only
4	U108	80	T	S01	For Storage and Transfer Only
5	U110	80	T	S01	For Storage and Transfer Only
6	U112	80	T	S01	For Storage and Transfer Only
7	U113	80	T	S01	For Storage and Transfer Only
8	U115	80	T	S01	For Storage and Transfer Only
9	U117	80	T	S01	For Storage and Transfer Only
10	U118	80	T	S01	For Storage and Transfer Only
11	U121	80	T	S01	For Storage and Transfer Only
12	U122	80	T	S01	For Storage and Transfer Only
13	U123	80	T	S01	For Storage and Transfer Only
14	U124	80	T	S01	For Storage and Transfer Only
15	U125	80	T	S01	For Storage and Transfer Only
16	U127	80	T	S01	For Storage and Transfer Only
17	U129	80	T	S01	For Storage and Transfer Only
18	U132	80	T	S01	For Storage and Transfer Only
19	U139	80	T	S01	For Storage and Transfer Only
20	U140	80	T	S01	For Storage and Transfer Only
21	U144	80	T	S01	For Storage and Transfer Only
22	U145	80	T	S01	For Storage and Transfer Only
23	U146	80	T	S01	For Storage and Transfer Only
24	U147	80	T	S01	For Storage and Transfer Only
25	U149	80	T	S01	For Storage and Transfer Only
26	U154	80	T	S01	For Storage and Transfer Only

Continued from page 2.

NOTE: Photocopy this page before completing if you have more than 26 wastes to list.

Form Approved OMB No. 158-S80004

EPA I.D. NUMBER (enter from page 1)	FOR OFFICIAL USE ONLY	
WILD006084711	W DUP 2 DUP	ILD000608471

IV. DESCRIPTION OF HAZARDOUS WASTES (continued)

LINE NO.	A. EPA HAZARD. WASTE NO. (enter code)	B. ESTIMATED ANNUAL QUANTITY OF WASTE	C. UNIT OF MEASURE (enter code)	D. PROCESSES 1. PROCESS CODES (enter)	D. PROCESSES 2. PROCESS DESCRIPTION (if a code is not entered in D(1))
1	U155	80	T	S01	For Storage and Transfer Only
2	U159	80	T	S01	For Storage and Transfer Only
3	U161	80	T	S01	For Storage and Transfer Only
4	U162	80	T	S01	For Storage and Transfer Only
5	U165	80	T	S01	For Storage and Transfer Only
6	U169	80	T	S01	For Storage and Transfer Only
7	U170	80	T	S01	For Storage and Transfer Only
8	U181	80	T	S01	For Storage and Transfer Only
9	U182	80	T	S01	For Storage and Transfer Only
10	U187	80	T	S01	For Storage and Transfer Only
11	U188	80	T	S01	For Storage and Transfer Only
12	U190	80	T	S01	For Storage and Transfer Only
13	U196	80	T	S01	For Storage and Transfer Only
14	U201	80	T	S01	For Storage and Transfer Only
15	U202	80	T	S01	For Storage and Transfer Only
16	U207	80	T	S01	For Storage and Transfer Only
17	U208	80	T	S01	For Storage and Transfer Only
18	U209	80	T	S01	For Storage and Transfer Only
19	U210	80	T	S01	For Storage and Transfer Only
20	U211	80	T	S01	For Storage and Transfer Only
21	U212	80	T	S01	For Storage and Transfer Only
22	U213	80	T	S01	For Storage and Transfer Only
23	U219	80	T	S01	For Storage and Transfer Only
24	U220	80	T	S01	For Storage and Transfer Only
25	U221	80	T	S01	For Storage and Transfer Only
26	U224	80	T	S01	For Storage and Transfer Only

CONTINUE ON REVERSE

(enter "A", "B", "C", etc. behind the "3" to identify photocopied pages)

Continued from page 2.

NOTE: Photocopy this page before completing if you have more than 26 wastes to list.

Form Approved OMB No. 158-S80004

EPA I.D. NUMBER (enter from page 1)	FOR OFFICIAL USE ONLY	
WILD000608471	WI DUP 2 DUP	ILD000608471

IV. DESCRIPTION OF HAZARDOUS WASTES (continued)

LINE NO.	A. EPA HAZARD. WASTE NO. (enter code)	B. ESTIMATED ANNUAL QUANTITY OF WASTE	C. UNIT OF MEASURE (enter code)	D. PROCESSES 1. PROCESS CODES (enter)	D. PROCESSES 2. PROCESS DESCRIPTION (if a code is not entered in D(1))
1	U226	80	T	S01	For Storage and Transfer Only
2	U227	80	T	S01	For Storage and Transfer Only
3	U228	80	T	S01	For Storage and Transfer Only
4	U229	80	T	S01	For Storage and Transfer Only
5	U230	80	T	S01	For Storage and Transfer Only
6	U231	80	T	S01	For Storage and Transfer Only
7	U234	80	T	S01	For Storage and Transfer Only
8	U239	80	T	S01	For Storage and Transfer Only
9	U240	80	T	S01	For Storage and Transfer Only
10	U244	80	T	S01	For Storage and Transfer Only
11	U247	80	T	S01	For Storage and Transfer Only
12					
13	P013	80	T	S01	For Storage and Transfer Only
14	P021	80	T	S01	For Storage and Transfer Only
15	P029	80	T	S01	For Storage and Transfer Only
16	P030	80	T	S01	For Storage and Transfer Only
17	P074	80	T	S01	For Storage and Transfer Only
18	P098	80	T	S01	For Storage and Transfer Only
19	P099	80	T	S01	For Storage and Transfer Only
20	P104	80	T	S01	For Storage and Transfer Only
21	P106	80	T	S01	For Storage and Transfer Only
22					
23					
24					
25					
26					

(enter "A", "B", "C", etc. behind the "3" to identify photocopied pages)

CHEM-CLEAR®

SUITE 915 • 992 OLD EAGLE SCHOOL ROAD • WAYNE, PENNSYLVANIA 19087 • (215) 687-8990

FYI + TO FILE
ILD 000608471

RECEIVED
DEC 29 1986
U.S. EPA, REGION V

December 24, 1986

Mr. Wayne Pearson
c/o RCRA Activities
Part B Permit Application
U.S. EPA, Region V
P.O. Box A3587
Chicago, IL 60690

Dear Mr. Pearson:

Pursuant to 40 CFR 270.72(a), we are amending Part A of the permit application for ChemClear's Chicago Treatment facility to add the following waste code not previously identified: K044. No other changes are being made in the permit at this time.

Attached is a copy of the revised Part A with the addition of K044 and the necessary signatures.

If you have any questions regarding this revision, please call me at (215) 687-8990 or our plant manager, Jim Laubsted, at (312) 646-6202.

Sincerely,

Ruth C. Niesen
Director of Environmental Affairs

RCN/dmp
Enclosure

Copy to State sent 1/20/87

COPY 2

Please print or type in the unshaded areas only
(fill-in areas are spaced for elite type, i.e., 12 characters/inch).

Form Approved OMB No. 158-R0175

FORM 1 GENERAL

EPA

U.S. ENVIRONMENTAL PROTECTION AGENCY

GENERAL INFORMATION

Consolidated Permits Program
(Read the "General Instructions" before starting.)

I. EPA I.D. NUMBER: F I L D 0 0 0 6 0 8 4 7 1 D

LABEL ITEMS

EPA I.D. NUMBER

III. FACILITY NAME

V. FACILITY MAILING ADDRESS

VI. FACILITY LOCATION

RECEIVED

PLEASE PLACE LABEL IN THIS SPACE

DEC 29 1986

SWD-TIB
U.S. EPA, REGION V

GENERAL INSTRUCTIONS

If a preprinted l
it in the designa
ation carefully; i
through it and
appropriate fill-
the preprinted d
left of the lebe
that should appe
proper fill-in are
complete and correct, you need not complete Items I, III, V, and VI *(except VI-B which must be completed regardless)*. Complete all Items if no label has been provided. Refer to the instructions for detailed item descriptions and for the legal authorizations under which this data is collected.

Part - B - 4
Section A - 2
ILD000608471
Revised 12/24/86

II. POLLUTANT CHARACTERISTICS

INSTRUCTIONS: Complete A through J to determine whether you need to submit any permit application forms to the EPA. If you answer "yes" to any questions, you must submit this form and the supplemental form listed in the parenthesis following the question. Mark "X" in the box in the third column if the supplemental form is attached. If you answer "no" to each question, you need not submit any of these forms. You may answer "no" if your activity is excluded from permit requirements; see Section C of the instructions. See also, Section D of the instructions for definitions of bold-faced terms.

SPECIFIC QUESTIONS	MARK 'X' YES	NO	FORM ATTACHED	SPECIFIC QUESTIONS	MARK 'X' YES	NO	FORM ATTACHED
A. Is this facility a publicly owned treatment works which results in a discharge to waters of the U.S.? (FORM 2A)		X		B. Does or will this facility *(either existing or proposed)* include a concentrated animal feeding operation or aquatic animal production facility which results in a discharge to waters of the U.S.? (FORM 2B)		X	
C. Is this a facility which currently results in discharges to waters of the U.S. other than those described in A or B above? (FORM 2C)		X		D. Is this a proposed facility *(other than those described in A or B above)* which will result in a discharge to waters of the U.S.? (FORM 2D)		X	
E. Does or will this facility treat, store, or dispose of hazardous wastes? (FORM 3)	X			F. Do you or will you inject at this facility industrial or municipal effluent below the lowermost stratum containing, within one quarter mile of the well bore, underground sources of drinking water? (FORM 4)		X	
G. Do you or will you inject at this facility any produced water or other fluids which are brought to the surface in connection with conventional oil or natural gas production, inject fluids used for enhanced recovery of oil or natural gas, or inject fluids for storage of liquid hydrocarbons? (FORM 4)		X		H. Do you or will you inject at this facility fluids for special processes such as mining of sulfur by the Frasch process, solution mining of minerals, in situ combustion of fossil fuel, or recovery of geothermal energy? (FORM 4)		X	
I. Is this facility a proposed stationary source which is one of the 28 industrial categories listed in the instructions and which will potentially emit 100 tons per year of any air pollutant regulated under the Clean Air Act and may affect or be located in an attainment area? (FORM 5)		X		J. Is this facility a proposed stationary source which is NOT one of the 28 industrial categories listed in the instructions and which will potentially emit 250 tons per year of any air pollutant regulated under the Clean Air Act and may affect or be located in an attainment area? (FORM 5)		X	

III. NAME OF FACILITY

1 SKIP CHEM CLEAR INC

IV. FACILITY CONTACT

A. NAME & TITLE *(last, first, & title)*	B. PHONE *(area code & no.)*
2 CORDING CARL R PRESIDENT	215 687 8990

V. FACILITY MAILING ADDRESS

A. STREET OR P.O. BOX

3 992 OLD EAGLE SCHOOL ROAD

B. CITY OR TOWN	C. STATE	D. ZIP CODE
4 WAYNE	PA	19087

VI. FACILITY LOCATION

A. STREET, ROUTE NO. OR OTHER SPECIFIC IDENTIFIER

5 11800 S STONY ISLAND AVENUE

B. COUNTY NAME

COOK

C. CITY OR TOWN	D. STATE	E. ZIP CODE	F. COUNTY CODE *(if known)*
6 CHICAGO	IL	60617	

CONTINUE ON REVERSE

CONTINUED FROM THE FRONT

Part - B - 5
Section A - 3
ILD000608471
Revised 12/24/86

VII. SIC CODES *(4-digit, in order of priority)*

A. FIRST	B. SECOND
4953 (specify) Refuse Collection	(specify)
C. THIRD	**D. FOURTH**
(specify)	(specify)

VIII. OPERATOR INFORMATION

A. NAME: CHEM CLEAR, INC

B. Is the name listed in Item VIII-A also the owner? [X] YES [ ] NO

C. STATUS OF OPERATOR *(Enter the appropriate letter into the answer box; if "Other", specify.)*
F = FEDERAL
S = STATE
P = PRIVATE
M = PUBLIC *(other than federal or state)*
O = OTHER *(specify)*
P (specify)

D. PHONE *(area code & no.)*: A 215 687 8990

E. STREET OR P.O. BOX: 992 OLD EAGLE SCHOOL ROAD

F. CITY OR TOWN: WAYNE
G. STATE: PA
H. ZIP CODE: 19087

IX. INDIAN LAND
Is the facility located on Indian lands? [ ] YES [X] NO

X. EXISTING ENVIRONMENTAL PERMITS

A. NPDES *(Discharges to Surface Water)*: 9 N	D. PSD *(Air Emissions from Proposed Sources)*: 9 P
B. UIC *(Underground Injection of Fluids)*: 9 U	E. OTHER *(specify)*: 9 1980-36-DE (specify) IL. Dev. Permit
C. RCRA *(Hazardous Wastes)*: 9	E. OTHER *(specify)*: 9 589202 (specify) Const. Permit

XI. MAP

Attach to this application a topographic map of the area extending to at least one mile beyond property bounderies. The map must show the outline of the facility, the location of each of its existing and proposed intake and discharge structures, each of its hazardous waste treatment, storage, or disposal facilities, and each well where it injects fluids underground. Include all springs, rivers and other surface water bodies in the map area. See instructions for precise requirements.

XII. NATURE OF BUSINESS *(provide a brief description)*

Chem-Clear, Inc. receives and chemically pretreats industrial waste water and sludges. The company discharges its effluent to the Metropolitan Sanitary District of Greater Chicago. The sludges generated and the sludges received are dewatered and transported to a landfill.

XIII. CERTIFICATION *(see instructions)*

I certify under penalty of law that I have personally examined and am familiar with the information submitted in this application and all attachments and that, based on my inquiry of those persons immediately responsible for obtaining the information contained in the application, I believe that the information is true, accurate and complete. I am aware that there are significant penalties for submitting false information, including the possibility of fine and imprisonment.

A. NAME & OFFICIAL TITLE *(type or print)*	B. SIGNATURE	C. DATE SIGNED
Arun M. Lakhani, V.P. Engineering	Arun Lakhani	12/24/86

COMMENTS FOR OFFICIAL USE ONLY

C

Please print or type in the unshaded areas only
(fill-in areas are spaced for elite type, i.e., 12 characters/in)

Form Approved OMB No. 158-S80004

FORM 3 RCRA

U.S. ENVIRONMENTAL PROTECTION AGENCY
HAZARDOUS WASTE PERMIT APPLICATION
Consolidated Permits Program
(This information is required under Section 3005 of RCRA.)

I. EPA I.D. NUMBER: F I L D 0 0 0 6 0 8 4 7 1

FOR OFFICIAL USE ONLY

APPLICATION APPROVED	DATE RECEIVED (yr., mo., & day)	COMMENTS

Part - B - 6
Section A - 4
ILD000608471
Revised 12/24/86

II. FIRST OR REVISED APPLICATION

Place an "X" in the appropriate box in A or B below *(mark one box only)* to indicate whether this is the first application you are submitting for your facility or a revised application. If this is your first application and you already know your facility's EPA I.D. Number, or if this is a revised application, enter your facility's EPA I.D. Number in Item I above.

A. FIRST APPLICATION *(place an "X" below and provide the appropriate date)*

[X] 1. EXISTING FACILITY *(See instructions for definition of "existing" facility. Complete item below.)*

FOR EXISTING FACILITIES, PROVIDE THE DATE *(yr., mo., & day)* OPERATION BEGAN OR THE DATE CONSTRUCTION COMMENCED *(use the boxes to the left)*

C 8 — YR. | MO. | DAY

[ ] 2. NEW FACILITY *(Complete item below.)*

FOR NEW FACILITIES, PROVIDE THE DATE *(yr., mo., & day)* OPERATION BEGAN OR IS EXPECTED TO BEGIN — YR. | MO. | DAY

B. REVISED APPLICATION *(place an "X" below and complete Item I above)*

[XX] 1. FACILITY HAS INTERIM STATUS

[ ] 2. FACILITY HAS A RCRA PERMIT

III. PROCESSES – CODES AND DESIGN CAPACITIES

A. PROCESS CODE – Enter the code from the list of process codes below that best describes each process to be used at the facility. Ten lines are provided for entering codes. If more lines are needed, enter the code(s) in the space provided. If a process will be used that is not included in the list of codes below, then describe the process *(including its design capacity)* in the space provided on the form *(Item III-C)*.

B. PROCESS DESIGN CAPACITY – For each code entered in column A enter the capacity of the process.
1. AMOUNT – Enter the amount.
2. UNIT OF MEASURE – For each amount entered in column B(1), enter the code from the list of unit measure codes below that describes the unit of measure used. Only the units of measure that are listed below should be used.

PROCESS	PROCESS CODE	APPROPRIATE UNITS OF MEASURE FOR PROCESS DESIGN CAPACITY
Storage:		
CONTAINER *(barrel, drum, etc.)*	S01	GALLONS OR LITERS
TANK	S02	GALLONS OR LITERS
WASTE PILE	S03	CUBIC YARDS OR CUBIC METERS
SURFACE IMPOUNDMENT	S04	GALLONS OR LITERS
Disposal:		
INJECTION WELL	D79	GALLONS OR LITERS
LANDFILL	D80	ACRE-FEET *(the volume that would cover one acre to a depth of one foot)* OR HECTARE-METER
LAND APPLICATION	D81	ACRES OR HECTARES
OCEAN DISPOSAL	D82	GALLONS PER DAY OR LITERS PER DAY
SURFACE IMPOUNDMENT	D83	GALLONS OR LITERS
Treatment:		
TANK	T01	GALLONS PER DAY OR LITERS PER DAY
SURFACE IMPOUNDMENT	T02	GALLONS PER DAY OR LITERS PER DAY
INCINERATOR	T03	TONS PER HOUR OR METRIC TONS PER HOUR; GALLONS PER HOUR OR LITERS PER HOUR
OTHER *(Use for physical, chemical, thermal or biological treatment processes not occurring in tanks, surface impoundments or incinerators. Describe the processes in the space provided; Item III-C.)*	T04	GALLONS PER DAY OR LITERS PER DAY

UNIT OF MEASURE	UNIT OF MEASURE CODE	UNIT OF MEASURE	UNIT OF MEASURE CODE	UNIT OF MEASURE	UNIT OF MEASURE CODE
GALLONS	G	LITERS PER DAY	V	ACRE-FEET	A
LITERS	L	TONS PER HOUR	D	HECTARE-METER	F
CUBIC YARDS	Y	METRIC TONS PER HOUR	W	ACRES	B
CUBIC METERS	C	GALLONS PER HOUR	E	HECTARES	Q
GALLONS PER DAY	U	LITERS PER HOUR	H		

EXAMPLE FOR COMPLETING ITEM III *(shown in line numbers X-1 and X-2 below)*: A facility has two storage tanks, one tank can hold 200 gallons and the other can hold 400 gallons. The facility also has an incinerator that can burn up to 20 gallons per hour.

C DUP 1

LINE NUMBER	A. PROCESS CODE (from list above)	B. PROCESS DESIGN CAPACITY 1. AMOUNT (specify)	2. UNIT OF MEASURE (enter code)	FOR OFFICIAL USE ONLY	LINE NUMBER	A. PROCESS CODE (from list above)	B. PROCESS DESIGN CAPACITY 1. AMOUNT	2. UNIT OF MEASURE (enter code)	FOR OFFICIAL USE ONLY
X-1	S02	600	G		5				
X-2	T03	20	E		6				
1	S02	1,000,000	G		7				
2	T04	600,000	U		8				
3					9				
4					10				

Continued from the front.

III. PROCESSES *(continued)*

C. SPACE FOR ADDITIONAL PROCESS CODES OR FOR DESCRIBING OTHER PROCESSES *(code "T04")*. FOR EACH PROCESS ENTERED HERE INCLUDE DESIGN CAPACITY.

(Revised 12/24/86)

I - Chemical Treatment T04
- A. Compatibility treatment to 200,000 GPD
  - 1. Neutralization of acids/alkalis
  - 2. Oxidation (chemical)
    - a. Cynaides
    - b. Sulfides
    - c. Thiols
    - d. Hydroquinones
    - e. Phenols
    - f. Aldehydes
    - g. Cresols
    - h. Other Organics
  - 3. Reduction
    - a. Hexchrome
- B. Mixed Treatment to 400,000 GPD
  - 1. pH adjustment (metal precipitation)

II - Sludge Treatment to 100,000 GPD
- A. Dewatering with Polymer microencapsulation
- B. Lime fixation

Part B - 7
Section A - 5
ILD000608471

IV. DESCRIPTION OF HAZARDOUS WASTES

A. EPA HAZARDOUS WASTE NUMBER — Enter the four-digit number from 40 CFR, Subpart D for each listed hazardous waste you will handle. If you handle hazardous wastes which are not listed in 40 CFR, Subpart D, enter the four-digit number*(s)* from 40 CFR, Subpart C that describes the characteristics and/or the toxic contaminants of those hazardous wastes.

B. ESTIMATED ANNUAL QUANTITY — For each **listed waste** entered in column A estimate the quantity of that waste that will be handled on an annual basis. For each **characteristic** or **toxic contaminant** entered in column A estimate the total annual quantity of all the non-listed waste*(s)* that will be handled which possess that characteristic or contaminant.

C. UNIT OF MEASURE — For each quantity entered in column B enter the unit of measure code. Units of measure which must be used and the appropriate codes are:

ENGLISH UNIT OF MEASURE	CODE	METRIC UNIT OF MEASURE	CODE
POUNDS	P	KILOGRAMS	K
TONS	T	METRIC TONS	M

If facility records use any other unit of measure for quantity, the units of measure must be converted into one of the required units of measure taking into account the appropriate density or specific gravity of the waste.

D. PROCESSES

1. PROCESS CODES:
   For listed hazardous waste: For each **listed** hazardous waste entered in column A select the code*(s)* from the list of process codes contained in Item III to indicate how the waste will be stored, treated, and/or disposed of at the facility.
   For non-listed hazardous wastes: For each characteristic or toxic contaminant entered in column A, select the code*(s)* from the list of process codes contained in Item III to indicate **all** the processes that will be used to store, treat, and/or dispose of all the non-listed hazardous wastes that possess that characteristic or toxic contaminant.
   Note: Four spaces are provided for entering process codes. If more are needed: (1) Enter the first three as described above; (2) Enter "000" in the extreme right box of Item IV-D(1); and (3) Enter in the space provided on page 4, the line number and the additional code*(s)*.
2. PROCESS DESCRIPTION: If a code is not listed for a process that will be used, describe the process in the space provided on the form.

NOTE: HAZARDOUS WASTES DESCRIBED BY MORE THAN ONE EPA HAZARDOUS WASTE NUMBER — Hazardous wastes that can be described by more than one EPA Hazardous Waste Number shall be described on the form as follows:

1. Select one of the EPA Hazardous Waste Numbers and enter it in column A. On the same line complete columns B,C, and D by estimating the total annual quantity of the waste and describing all the processes to be used to treat, store, and/or dispose of the waste.
2. In column A of the next line enter the other EPA Hazardous Waste Number that can be used to describe the waste. In column D(2) on that line enter "included with above" and make no other entries on that line.
3. Repeat step 2 for each other EPA Hazardous Waste Number that can be used to describe the hazardous waste.

EXAMPLE FOR COMPLETING ITEM IV *(shown in line numbers X-1, X-2, X-3, and X-4 below)* — A facility will treat and dispose of an estimated 900 pounds per year of chrome shavings from leather tanning and finishing operation. In addition, the facility will treat and dispose of three non-listed wastes. Two wastes are corrosive only and there will be an estimated 200 pounds per year of each waste. The other waste is corrosive and ignitable and there will be an estimated 100 pounds per year of that waste. Treatment will be in an incinerator and disposal will be in a landfill.

LINE NO.	A. EPA HAZARD. WASTE NO. (enter code)	B. ESTIMATED ANNUAL QUANTITY OF WASTE	C. UNIT OF MEASURE (enter code)	D. PROCESSES 1. PROCESS CODES (enter)	D. PROCESSES 2. PROCESS DESCRIPTION (if a code is not entered in D(1))
X-1	K054	900	P	T03 D80	
	D002	400	P	T03 D80	
X-3	D001	100	P	T03 D80	
X-4	D002				included with above

CONTINUE ON PAGE 3

Continued from page 2.
NOTE: Photocopy this page before completing if you have more than 26 wastes to list.

Form Approved OMB No. 158-S80004

EPA I.D. NUMBER (enter from page 1)	FOR OFFICIAL USE ONLY
W 1 2 - 13 T/A 14 C 15	W DUP 1 2 - 13 T/A 14 C 15 2 DUP 23 - 26

Part B - 8
Section A - 6
ILD000608471
Revised 12/24/86

IV. DESCRIPTION OF HAZARDOUS WASTES (continued)

LINE NO.	A. EPA HAZARD. WASTE NO. (enter code) 23 - 26	B. ESTIMATED ANNUAL QUANTITY OF WASTE 27 - 35	C. UNIT OF MEASURE (enter code) 36	D. PROCESSES 1. PROCESS CODES (enter) 27 - 29 / 27 - 29 / 27 - 29 / 27 - 29	2. PROCESS DESCRIPTION (if a code is not entered in D(1))
1	D001	1,000	T	S02 T04 S02 T04	
2	D002	40,000	T	S02 T04 S02 T04	
3	D003	1,000	T	S02 T04 S02 T04	
4	D004	6,000	T	S02 T04	
5	D005	1,000	T	S02 T04	
6	D006	2,000	T	S02 T04	
7	D007	6,000	T	S02 T04 S02 T04	
8	D007	2,000	T	S02 T04	
9	D008	2,000	T	S02 T04	
10	D009	1,000	T	S02 T04	
11	D010	1,000	T	S02 T04	
12	D011	1,000	T	S02 T04	
13	F003	1,000	T	S02 T04 S02 T04	
14	F004	1,000	T	S02 T04 S02 T04	
15	F005	1,000	T	S02 T04 S02 T04	
16	F006	10,000	T	S02 T04 S02 T04	
17	F007	1,000	T	S02 T04 S02 T04	
18	F008	1,000	T	S02 T04 S02 T04	
19	F009	1,000	T	S02 T04 S02 T04	
20	F010	1,000	T	S02 T04 S02 T04	
21	F011	1,000	T	S02 T04 S02 T04	
22	F012	1,000	T	S02 T04	
23	F015	1,000	T	S02 T04 S02 T04	
24	F019	1,000	T	S02 T04	
25	K002	2,000	T	S02 T04 S02 T04	
26	K003	2,000	T	S02 T04 S02 T04	

EPA Form 3510-3 (6-80)

CONTINUE ON REVERSE

Continued from page 2.

NOTE: Photocopy this page before completing if you have more than 26 wastes to list.

Form Approved OMB No. 158-S80004

EPA I.D. NUMBER (enter from page 1)	FOR OFFICIAL USE ONLY
W	W DUP T/A 2 C DUP

Part B - 9
Section A - 7
ILD000608471
Revised 12/24/86

IV. DESCRIPTION OF HAZARDOUS WASTES (continued)

LINE NO.	A. EPA HAZARD. WASTE NO. (enter code)	B. ESTIMATED ANNUAL QUANTITY OF WASTE	C. UNIT OF MEASURE (enter code)	D. PROCESSES 1. PROCESS CODES (enter)				2. PROCESS DESCRIPTION (if a code is not entered in D(1))
1	K004	2,000	T	S02	T04	S02	T04	
2	K005	2,000	T	S02	T04	S02	T04	
3	K006	2,000	T	S02	T04	S02	T04	
4	K007	2,000	T	S02	T04	S02	T04	
5	K008	2,000	T	S02	T04	S02	T04	
6	K071	2,000	T	S02	T04			
7	K106	2,000	T	S02	T04			
8	K061	5,000	T	S02	T04	S02	T04	
9	K062	5,000	T	S02	T04	S02	T04	
10	K069	5,000	T	S02	T04	S02	T04	
11	K100	5,000	T	S02	T04	S02	T04	
12	K086	5,000	T	S02	T04	S02	T04	
13	K060	1,000	T	S02	T04	S02	T04	
14	K087	1,000	T	S02	T04	S02	T04	
15	P012	5,000	T	S02	T04			
16	P013	1,000	T	S02	T04	S02	T04	
17	P015	5,000	T	S02	T04			
18	P021	1,000	T	S02	T04	S02	T04	
19	P029	1,000	T	S02	T04	S02	T04	
20	P030	1,000	T	S02	T04	S02	T04	
21	P074	1,000	T	S02	T04	S02	T04	
22	P098	1,000	T	S02	T04	S02	T04	
23	P099	1,000	T	S02	T04	S02	T04	
24	P104	1,000	T	S02	T04	S02	T04	
25	P106	1,000	T	S02	T04	S02	T04	
26	P113	2,000		S02	T04			

CONTINUE ON REVERSE

Continued from page 2.

NOTE: Photocopy this page before completing if you have more than 26 wastes to list.

Form Approved OMB No. 158-S80004

EPA I.D. NUMBER (enter from page 1)	FOR OFFICIAL USE ONLY
W	W DUP DUP

Part B - 10
Section A -8
ILD000608471
Revised 12/24/86

IV. DESCRIPTION OF HAZARDOUS WASTES (continued)

LINE NO.	A. EPA HAZARD. WASTE NO. (enter code)	B. ESTIMATED ANNUAL QUANTITY OF WASTE	C. UNIT OF MEASURE (enter code)	D. PROCESSES 1. PROCESS CODES (enter)	D. PROCESSES 2. PROCESS DESCRIPTION (if a code is not entered in D(1))
1	P114	2,000		S02 T04	
2	P115	2,000	T	S02 T04	
3	P120	2,000	T	S02 T04	
4	P121	1,000	T	S02 T04 S02 T04	
5	U001	1,000	T	S02 T04 S02 T04	
6	U002	1,000	T	S02 T04 S02 T04	
7	U031	1,000	T	S02 T04 S02 T04	
8	U051	5,000	T	S02 T04 S02 T04	
9	U052	5,000	T	S02 T04 S02 T04	
10	U054	5,000	T	S02 T04 S02 T04	
11	U055	1,000	T	S02 T04 S02 T04	
12	U110	1,000	T	S02 T04 S02 T04	
13	U112	1,000	T	S02 T04 S02 T04	
14	U113	1,000	T	S02 T04 S02 T04	
15	U122	5,000	T	S02 T04 S02 T04	
16	U133	5,000	T	S02 T04 S02 T04	
17	U134	5,000	T	S02 T04 S02 T04	
18	U140	1,000	T	S02 T04 S02	
19	U144	50,000	T	S02 T04	
20	U145	50,000	T	S02 T04	
21	U146	50,000	T	S02 T04	
22	U147	50,000	T	S02 T04	
23	U151	50,000	T	S02 T04	
24	U161	1,000	T	S02 T04 S02 T04	
25	U165	2,000	T	S02 T04 S02 T04	
26	U166	5,000	T	S02 T04 S02 T04	

CONTINUE ON REVERSE

Continued from page 2.

NOTE: Photocopy this page before completing if you have more than 26 wastes to list.

Form Approved C

EPA I.D. NUMBER (enter from page 1)	FOR OFFICIAL USE ONLY
W 1 2 - 13 T/A 14 C 15: 1	W 1 2 - 13 T/A 14 C 15: 2 DUP 23 - 26

Part B - 11
Section A -9
ILD000608471
Revised 12/24/86

IV. DESCRIPTION OF HAZARDOUS WASTES *(continued)*

LINE NO.	A. EPA HAZARD. WASTE NO. (enter code) 23 - 26	B. ESTIMATED ANNUAL QUANTITY OF WASTE 27 - 35	C. UNIT OF MEASURE (enter code) 36	D. PROCESSES 1. PROCESS CODES (enter) 27 - 29 / 27 - 29 / 27 - 29 / 27 - 29	2. PROCESS DESCRIPTION (if a code is not entered in D(1))
1	U 1 8 8	5,000	T	S 0 2 T 0 4 S 0 2 T 0 4	
2	U 1 9 7	5,000	T	S 0 2 T 0 4 S 0 2 T 0 4	
3	U 2 0 1	5,000	T	S 0 2 T 0 4 S 0 2 T 0 4	
4	U 2 0 4	5,000	T	S 0 2 T 0 4 S 0 2 T 0 4	
5	U 2 1 4	10,000	T	S 0 2 T 0 4	
6	U 2 1 5	10,000	T	S 0 2 T 0 4	
7	U 2 1 6	10,000	T	S 0 2 T 0 4	
8	U 2 1 7	10,000	T	S 0 2 T 0 4	
9	U 2 1 9	1,000	T	S 0 2 T 0 4 S 0 2 T 0 4	
10	U 2 2 0	1,000	T	S 0 2 T 0 4 S 0 2 T 0 4	
11	U 2 3 9	1,000	T	S 0 2 T 0 4 S 0 2 T 0 4	
12	F 0 0 1	1,000	T	S 0 2 T 0 4 S 0 2 T 0 4	
13	F 0 0 2	1,000	T	S 0 2 T 0 4 S 0 2 T 0 4	
14	K 0 4 4	1,000	T	S 0 2 T 0 4 S 0 2 T 0 4	
15					
16					
17					
18					
19					
20					
21					
22					
23					
24					
25					
26					

CONTINUE ON REVERSE

Continued from the front.

IV. DESCRIPTION OF HAZARDOUS WASTES *(continued)*

E. USE THIS SPACE TO LIST ADDITIONAL PROCESS CODES FROM ITEM D(1) ON PAGE 3.

Part B - 12
Section A - 10
ILD000608471
Revised 12/24/86

EPA I.D. NO. *(enter from page 1)*														
F	I	L	D	0	0	0	6	0	8	4	7	1	T/N	C 6

V. FACILITY DRAWING

All existing facilities must include in the space provided on page 5 a scale drawing of the facility *(see instructions for more detail)*.

VI. PHOTOGRAPHS

All existing facilities must include photographs *(aerial or ground—level)* that clearly delineate all existing structures; existing storage, treatment and disposal areas; and sites of future storage, treatment or disposal areas *(see instructions for more detail)*.

VII. FACILITY GEOGRAPHIC LOCATION

LATITUDE *(degrees, minutes, & seconds)*	LONGITUDE *(degrees, minutes, & seconds)*
41 40 44	87 34 46

VIII. FACILITY OWNER

☐ A. If the facility owner is also the facility operator as listed in Section VIII on Form 1, "General Information", place an "X" in the box to the left and skip to Section IX below.

B. If the facility owner is not the facility operator as listed in Section VIII on Form 1, complete the following items:

1. NAME OF FACILITY'S LEGAL OWNER	2. PHONE NO. *(area code & no.)*
E Chem-Clear, Inc.	215-687-8990

3. STREET OR P.O. BOX	4. CITY OR TOWN	5. ST.	6. ZIP CODE
F 992 Old Eagle School Road	G Wayne,	PA	19087

IX. OWNER CERTIFICATION

I certify under penalty of law that I have personally examined and am familiar with the information submitted in this and all attached documents, and that based on my inquiry of those individuals immediately responsible for obtaining the information, I believe that the submitted information is true, accurate, and complete. I am aware that there are significant penalties for submitting false information, including the possibility of fine and imprisonment.

A. NAME *(print or type)*	B. SIGNATURE	C. DATE SIGNED
Arun M. Lakhani, V.P.	Arun Lakhani	12/24/86

X. OPERATOR CERTIFICATION

I certify under penalty of law that I have personally examined and am familiar with the information submitted in this and all attached documents, and that based on my inquiry of those individuals immediately responsible for obtaining the information, I believe that the submitted information is true, accurate, and complete. I am aware that there are significant penalties for submitting false information, including the possibility of fine and imprisonment.

A. NAME *(print or type)*	B. SIGNATURE	C. DATE SIGNED
Arun M. Lakhani, V.P.	Arun Lakhani	12/24/86

CONTINUE ON PAGE 5

Form Approved OMB No. 158-S80004

Part B - 13
Section A - 11
ILD000608471
Revised 12/24/86

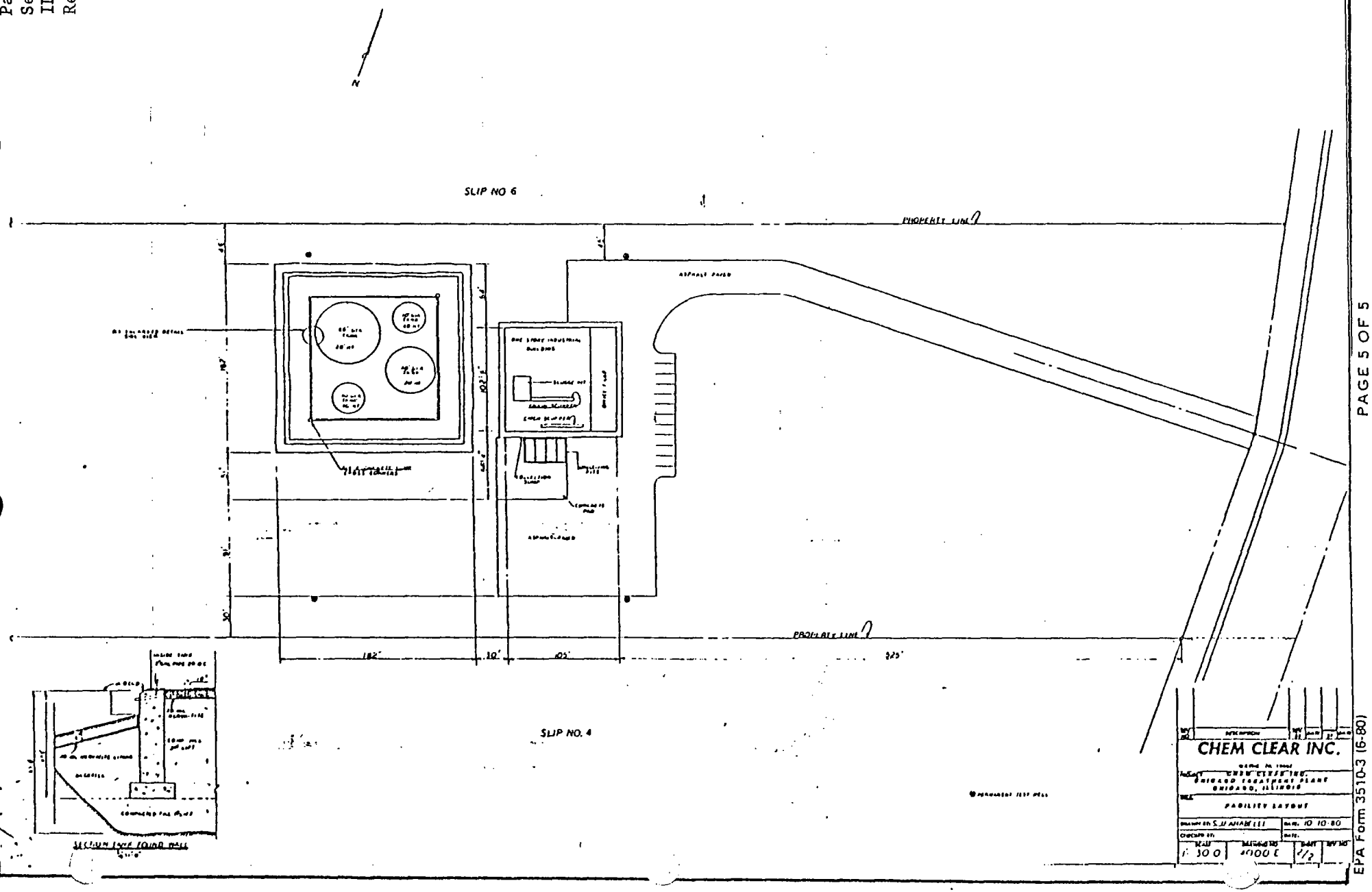

Continued from page 4.

EPA Form 3510-3 (6-80)

CHEM-CLEAR

SUITE 915 • 992 OLD EAGLE SCHOOL ROAD • WAYNE, PENNSYLVANIA 19087 • (215) 687-8990

August 1, 1986

Ms. Jeannette Virgilio
Division of Land Pollution Control (LP #24)
Illinois Environmental Protection Agency
2200 Churchill Road
Springfield, IL 62706

RECEIVED
AUG 05 1986
SWD - AIS
U.S. EPA, REGION V

Dear Ms. Virgilio:

At the request of our Plant Manager, Jim Laubsted, I am enclosing an updated copy of the Part A Permit application for ChemClear's South Stony Island Avenue treatment facility. I trust that this is what you required.

Please do not hesitate to contact me directly at our corporate office if you need any additional information.

Sincerely,

Ruth C. Niesen
Director of Environmental Affairs

RCN/dmp
Enclosure

cc: Jim Laubsted, Plant Manager
Wayne Pearson, U.S. EPA, Region V

RECEIVED
AUG 04 1986
SOLID WASTE BRANCH
U.S. EPA, REGION V

COPY 2

Please print or type in the unshaded areas only
(fill-in areas are spaced for elite type, i.e., 12 characters/inch).

Form Approved OMB No. 158-R0175

FORM 1 GENERAL

EPA

U.S. ENVIRONMENTAL PROTECTION AGENCY

GENERAL INFORMATION

Consolidated Permits Program

(Read the "General Instructions" before starting.)

I. EPA I.D. NUMBER: F ILD000608471 D

LABEL ITEMS

EPA I.D. NUMBER

III. FACILITY NAME

V. FACILITY MAILING ADDRESS

VI. FACILITY LOCATION

RECEIVED

AUG 05 1986

PLEASE PLACE LABEL IN THIS SPACE

U.S. EPA, REGION V

GENERAL INSTRUCTIONS

If a preprinted l
it in the designa
ation carefully; i
through it and
appropriate fill-i
the preprinted d
left of the labe
that should appe
proper fill-in are
complete and correct, you need not complete Items I, III, V, and VI *(except VI-B which must be completed regardless)*. Complete all Items if no label has been provided. Refer to the instructions for detailed item descriptions and for the legal authorizations under which this data is collected.

Part - B - 4
Section A - 2
ILD000608471

II. POLLUTANT CHARACTERISTICS

INSTRUCTIONS: Complete A through J to determine whether you need to submit any permit application forms to the EPA. If you answer "yes" to any questions, you must submit this form and the supplemental form listed in the parenthesis following the question. Mark "X" in the box in the third column if the supplemental form is attached. If you answer "no" to each question, you need not submit any of these forms. You may answer "no" if your activity is excluded from permit requirements; see Section C of the instructions. See also, Section D of the instructions for definitions of bold-faced terms.

SPECIFIC QUESTIONS	MARK 'X' YES	NO	FORM ATTACHED	SPECIFIC QUESTIONS	MARK 'X' YES	NO	FORM ATTACHED
A. Is this facility a publicly owned treatment works which results in a discharge to waters of the U.S.? (FORM 2A)		X		B. Does or will this facility *(either existing or proposed)* include a concentrated animal feeding operation or aquatic animal production facility which results in a discharge to waters of the U.S.? (FORM 2B)		X	
C. Is this a facility which currently results in discharges to waters of the U.S. other than those described in A or B above? (FORM 2C)		X		D. Is this a proposed facility *(other than those described in A or B above)* which will result in a discharge to waters of the U.S.? (FORM 2D)		X	
E. Does or will this facility treat, store, or dispose of hazardous wastes? (FORM 3)	X			F. Do you or will you inject at this facility industrial or municipal effluent below the lowermost stratum containing, within one quarter mile of the well bore, underground sources of drinking water? (FORM 4)		X	
G. Do you or will you inject at this facility any produced water or other fluids which are brought to the surface in connection with conventional oil or natural gas production, inject fluids used for enhanced recovery of oil or natural gas, or inject fluids for storage of liquid hydrocarbons? (FORM 4)		X		H. Do you or will you inject at this facility fluids for special processes such as mining of sulfur by the Frasch process, solution mining of minerals, in situ combustion of fossil fuel, or recovery of geothermal energy? (FORM 4)		X	
I. Is this facility a proposed stationary source which is one of the 28 industrial categories listed in the instructions and which will potentially emit 100 tons per year of any air pollutant regulated under the Clean Air Act and may affect or be located in an attainment area? (FORM 5)		X		J. Is this facility a proposed stationary source which is NOT one of the 28 industrial categories listed in the instructions and which will potentially emit 250 tons per year of any air pollutant regulated under the Clean Air Act and may affect or be located in an attainment area? (FORM 5)		X	

III. NAME OF FACILITY

1 SKIP CHEM CLEAR INC

IV. FACILITY CONTACT

A. NAME & TITLE *(last, first, & title)*	B. PHONE *(area code & no.)*
2 CORDING CARL R PRESIDENT	215 687 8990

V. FACILITY MAILING ADDRESS

A. STREET OR P.O. BOX

3 992 OLD EAGLE SCHOOL ROAD

B. CITY OR TOWN	C. STATE	D. ZIP CODE
4 WAYNE	PA	19087

VI. FACILITY LOCATION

A. STREET, ROUTE NO. OR OTHER SPECIFIC IDENTIFIER

5 11800 S STONY ISLAND AVENUE

B. COUNTY NAME

COOK

C. CITY OR TOWN	D. STATE	E. ZIP CODE	F. COUNTY CODE *(if known)*
6 CHICAGO	IL	60617	

Please print or type in the unshaded areas only
(fill-in areas are spaced for elite type, i.e., 12 characters/inch).

Form Approved OMB No. 158-S80004

FORM 3 RCRA

EPA

U.S. ENVIRONMENTAL PROTECTION AGENCY

HAZARDOUS WASTE PERMIT APPLICATION

Consolidated Permits Program

(This information is required under Section 3005 of RCRA.)

I. EPA I.D. NUMBER

F I L D 0 0 0 6 0 8 4 7 1

FOR OFFICIAL USE ONLY

APPLICATION APPROVED	DATE RECEIVED (yr., mo., & day)	COMMENTS

Part - B - 6
Section A - 4
ILD000608471

II. FIRST OR REVISED APPLICATION

Place an "X" in the appropriate box in A or B below *(mark one box only)* to indicate whether this is the first application you are submitting for your facility or a revised application. If this is your first application and you already know your facility's EPA I.D. Number, or if this is a revised application, enter your facility's EPA I.D. Number in Item I above.

A. FIRST APPLICATION *(place an "X" below and provide the appropriate date)*

[X] 1. EXISTING FACILITY *(See instructions for definition of "existing" facility. Complete item below.)*

FOR EXISTING FACILITIES, PROVIDE THE DATE *(yr., mo., & day)* OPERATION BEGAN OR THE DATE CONSTRUCTION COMMENCED *(use the boxes to the left)*

C	YR.	MO.	DAY
8			

[ ] 2. NEW FACILITY *(Complete item below.)*

FOR NEW FACILITIES, PROVIDE THE DATE *(yr., mo., & day)* OPERATION BEGAN OR IS EXPECTED TO BEGIN

YR.	MO.	DAY

B. REVISED APPLICATION *(place an "X" below and complete Item I above)*

[XX] 1. FACILITY HAS INTERIM STATUS

[ ] 2. FACILITY HAS A RCRA PERMIT

III. PROCESSES – CODES AND DESIGN CAPACITIES

A. PROCESS CODE – Enter the code from the list of process codes below that best describes each process to be used at the facility. Ten lines are provided for entering codes. If more lines are needed, enter the code(s) in the space provided. If a process will be used that is not included in the list of codes below, then describe the process *(including its design capacity)* in the space provided on the form *(Item III-C)*.

B. PROCESS DESIGN CAPACITY – For each code entered in column A enter the capacity of the process.
1. AMOUNT – Enter the amount.
2. UNIT OF MEASURE – For each amount entered in column B(1), enter the code from the list of unit measure codes below that describes the unit of measure used. Only the units of measure that are listed below should be used.

PROCESS	PROCESS CODE	APPROPRIATE UNITS OF MEASURE FOR PROCESS DESIGN CAPACITY
Storage:		
CONTAINER *(barrel, drum, etc.)*	S01	GALLONS OR LITERS
TANK	S02	GALLONS OR LITERS
WASTE PILE	S03	CUBIC YARDS OR CUBIC METERS
SURFACE IMPOUNDMENT	S04	GALLONS OR LITERS
Disposal:		
INJECTION WELL	D79	GALLONS OR LITERS
LANDFILL	D80	ACRE-FEET *(the volume that would cover one acre to a depth of one foot)* OR HECTARE-METER
LAND APPLICATION	D81	ACRES OR HECTARES
OCEAN DISPOSAL	D82	GALLONS PER DAY OR LITERS PER DAY
SURFACE IMPOUNDMENT	D83	GALLONS OR LITERS

PROCESS	PROCESS CODE	APPROPRIATE UNITS OF MEASURE FOR PROCESS DESIGN CAPACITY
Treatment:		
TANK	T01	GALLONS PER DAY OR LITERS PER DAY
SURFACE IMPOUNDMENT	T02	GALLONS PER DAY OR LITERS PER DAY
INCINERATOR	T03	TONS PER HOUR OR METRIC TONS PER HOUR; GALLONS PER HOUR OR LITERS PER HOUR
OTHER *(Use for physical, chemical, thermal or biological treatment processes not occurring in tanks, surface impoundments or incinerators. Describe the processes in the space provided; Item III-C.)*	T04	GALLONS PER DAY OR LITERS PER DAY

UNIT OF MEASURE	UNIT OF MEASURE CODE	UNIT OF MEASURE	UNIT OF MEASURE CODE	UNIT OF MEASURE	UNIT OF MEASURE CODE
GALLONS	G	LITERS PER DAY	V	ACRE-FEET	A
LITERS	L	TONS PER HOUR	D	HECTARE-METER	F
CUBIC YARDS	Y	METRIC TONS PER HOUR	W	ACRES	B
CUBIC METERS	C	GALLONS PER HOUR	E	HECTARES	Q
GALLONS PER DAY	U	LITERS PER HOUR	H		

EXAMPLE FOR COMPLETING ITEM III *(shown in line numbers X-1 and X-2 below)*: A facility has two storage tanks, one tank can hold 200 gallons and the other can hold 400 gallons. The facility also has an incinerator that can burn up to 20 gallons per hour.

C DUP 1

LINE NUMBER	A. PROCESS CODE (from list above)	B. PROCESS DESIGN CAPACITY 1. AMOUNT (specify)	2. UNIT OF MEASURE (enter code)	FOR OFFICIAL USE ONLY	LINE NUMBER	A. PROCESS CODE (from list above)	B. PROCESS DESIGN CAPACITY 1. AMOUNT	2. UNIT OF MEASURE (enter code)	FOR OFFICIAL USE ONLY
X-1	S 0 2	600	G		5				
X-2	T 0 3	20	E		6				
1	S 0 2	1,000,000	G		7				
2	T 0 4	600,000	U		8				
3					9				
4					10				

CONTINUE ON REVERSE

Continued from the front.

III. PROCESSES *(continued)*

C. SPACE FOR ADDITIONAL PROCESS CODES OR FOR DESCRIBING OTHER PROCESSES *(code "T04")*. FOR EACH PROCESS ENTERED HERE INCLUDE DESIGN CAPACITY.

I - Chemical Treatment T04
- A. Compatibility treatment to 200,000 GPD
  - 1. Neutralization of acids/alkalis
  - 2. Oxidation (chemical)
    - a. Cynaides
    - b. Sulfides
    - c. Thiols
    - d. Hydroquinones
    - e. Phenols
    - f. Aldehydes
    - g. Cresols
    - h. Other Organics
  - 3. Reduction
    - a. Hexchrome
- B. Mixed Treatment to 400,000 GPD
  - 1. pH adjustment (metal precipitation)

II - Sludge Treatment to 100,000 GPD
- A. Dewatering with Polymer microencapsulation
- B. Lime fixation

Part B - 7
Section A - 5
ILD000608471

IV. DESCRIPTION OF HAZARDOUS WASTES

A. EPA HAZARDOUS WASTE NUMBER — Enter the four—digit number from 40 CFR, Subpart D for each listed hazardous waste you will handle. If you handle hazardous wastes which are not listed in 40 CFR, Subpart D, enter the four—digit number*(s)* from 40 CFR, Subpart C that describes the characteristics and/or the toxic contaminants of those hazardous wastes.

B. ESTIMATED ANNUAL QUANTITY — For each **listed waste** entered in column A estimate the quantity of that waste that will be handled on an annual basis. For each **characteristic** or **toxic contaminant** entered in column A estimate the total annual quantity of all the non—listed waste*(s)* that will be handled which possess that characteristic or contaminant.

C. UNIT OF MEASURE — For each quantity entered in column B enter the unit of measure code. Units of measure which must be used and the appropriate codes are:

ENGLISH UNIT OF MEASURE	CODE	METRIC UNIT OF MEASURE	CODE
POUNDS	P	KILOGRAMS	K
TONS	T	METRIC TONS	M

If facility records use any other unit of measure for quantity, the units of measure must be converted into one of the required units of measure taking into account the appropriate density or specific gravity of the waste.

D. PROCESSES

1. PROCESS CODES:
   For listed hazardous waste: For each listed hazardous waste entered in column A select the code*(s)* from the list of process codes contained in Item III to indicate how the waste will be stored, treated, and/or disposed of at the facility.
   For non—listed hazardous wastes: For each characteristic or toxic contaminant entered in column A, select the code*(s)* from the list of process codes contained in Item III to indicate **all** the processes that will be used to store, treat, and/or dispose of all the non—listed hazardous wastes that possess that characteristic or toxic contaminant.
   Note: Four spaces are provided for entering process codes. If more are needed: (1) Enter the first three as described above; (2) Enter "000" in the extreme right box of Item IV-D(1); and (3) Enter in the space provided on page 4, the line number and the additional code*(s)*.
2. PROCESS DESCRIPTION: If a code is not listed for a process that will be used, describe the process in the space provided on the form.

NOTE: HAZARDOUS WASTES DESCRIBED BY MORE THAN ONE EPA HAZARDOUS WASTE NUMBER — Hazardous wastes that can be described by more than one EPA Hazardous Waste Number shall be described on the form as follows:
1. Select one of the EPA Hazardous Waste Numbers and enter it in column A. On the same line complete columns B,C, and D by estimating the total annual quantity of the waste and describing all the processes to be used to treat, store, and/or dispose of the waste.
2. In column A of the next line enter the other EPA Hazardous Waste Number that can be used to describe the waste. In column D(2) on that line enter "included with above" and make no other entries on that line.
3. Repeat step 2 for each other EPA Hazardous Waste Number that can be used to describe the hazardous waste.

EXAMPLE FOR COMPLETING ITEM IV *(shown in line numbers X-1, X-2, X-3, and X-4 below)* — A facility will treat and dispose of an estimated 900 pounds per year of chrome shavings from leather tanning and finishing operation. In addition, the facility will treat and dispose of three non—listed wastes. Two wastes are corrosive only and there will be an estimated 200 pounds per year of each waste. The other waste is corrosive and ignitable and there will be an estimated 100 pounds per year of that waste. Treatment will be in an incinerator and disposal will be in a landfill.

LINE NO.	A. EPA HAZARD. WASTE NO. *(enter code)*	B. ESTIMATED ANNUAL QUANTITY OF WASTE	C. UNIT OF MEASURE *(enter code)*	D. PROCESSES 1. PROCESS CODES *(enter)*	D. PROCESSES 2. PROCESS DESCRIPTION *(if a code is not entered in D(1))*
X-1	K054	900	P	T03 D80	
X-2	D002	400	P	T03 D80	
X-3	D001	100	P	T03 D80	
X-4	D002				*included with above*

CONTINUE ON PAGE 3

Continued from page 2.
NOTE: Photocopy this page before completing if you have more than 26 wastes to list.

Form Approved OMB No. 158-S80004

EPA I.D. NUMBER (enter from page 1)	FOR OFFICIAL USE ONLY
W 1	W DUP 2 DUP

Part B - 8
Section A - 6
ILD000608471

IV. DESCRIPTION OF HAZARDOUS WASTES (continued)

LINE NO.	A. EPA HAZARD. WASTE NO. (enter code)	B. ESTIMATED ANNUAL QUANTITY OF WASTE	C. UNIT OF MEASURE (enter code)	D. PROCESSES 1. PROCESS CODES (enter)	D. PROCESSES 2. PROCESS DESCRIPTION (if a code is not entered in D(1))
1	D001	1,000	T	S02 T04 S02 T04	
2	D002	40,000	T	S02 T04 S02 T04	
3	D003	1,000	T	S02 T04 S02 T04	
4	D004	6,000	T	S02 T04	
5	D005	1,000	T	S02 T04	
6	D006	2,000	T	S02 T04	
7	D007	6,000	T	S02 T04 S02 T04	
8	D007	2,000	T	S02 T04	
9	D008	2,000	T	S02 T04	
10	D009	1,000	T	S02 T04	
11	D010	1,000	T	S02 T04	
12	D011	1,000	T	S02 T04	
13	F003	1,000	T	S02 T04 S02 T04	
14	F004	1,000	T	S02 T04 S02 T04	
15	F005	1,000	T	S02 T04 S02 T04	
16	F006	10,000	T	S02 T04 S02 T04	
17	F007	1,000	T	S02 T04 S02 T04	
18	F008	1,000	T	S02 T04 S02 T04	
19	F009	1,000	T	S02 T04 S02 T04	
20	F010	1,000	T	S02 T04 S02 T04	
21	F011	1,000	T	S02 T04 S02 T04	
22	F012	1,000	T	S02 T04	
23	F015	1,000	T	S02 T04 S02 T04	
24	F019	1,000	T	S02 T04	
25	K002	2,000	T	S02 T04 S02 T04	
26	K003	2,000	T	S02 T04 S02 T04	

EPA Form 3510-3 (6-80)

CONTINUE ON REVERSE

(enter "A", "B", "C", etc. behind the "3" to identify photocopied pages)

Continued from page 2.
NOTE: Photocopy this page before completing if you have more than 26 wastes to list. Form Approved OMB No. 158-S80004

EPA I.D. NUMBER (enter from page 1)	FOR OFFICIAL USE ONLY
W	W DUP 2 DUP

Part B - 9
Section A - 7
ILD000608471

IV. DESCRIPTION OF HAZARDOUS WASTES (continued)

LINE NO.	A. EPA HAZARD. WASTE NO. (enter code)	B. ESTIMATED ANNUAL QUANTITY OF WASTE	C. UNIT OF MEASURE (enter code)	D. PROCESSES 1. PROCESS CODES (enter)				D. PROCESSES 2. PROCESS DESCRIPTION (If a code is not entered in D(1))
1	K004	2,000	T	S02	T04	S02	T04	
2	K005	2,000	T	S02	T04	S02	T04	
3	K006	2,000	T	S02	T04	S02	T04	
4	K007	2,000	T	S02	T04	S02	T04	
5	K008	2,000	T	S02	T04	S02	T04	
6	K071	2,000	T	S02	T04			
7	K106	2,000	T	S02	T04			
8	K061	5,000	T	S02	T04	S02	T04	
9	K062	5,000	T	S02	T04	S02	T04	
10	K069	5,000	T	S02	T04	S02	T04	
11	K100	5,000	T	S02	T04	S02	T04	
12	K086	5,000	T	S02	T04	S02	T04	
13	K060	1,000	T	S02	T04	S02	T04	
14	K087	1,000	T	S02	T04	S02	T04	
15	P012	5,000	T	S02	T04			
16	P013	1,000	T	S02	T04	S02	T04	
17	P015	5,000	T	S02	T04			
18	P021	1,000	T	S02	T04	S02	T04	
19	P029	1,000	T	S02	T04	S02	T04	
20	P030	1,000	T	S02	T04	S02	T04	
21	P074	1,000	T	S02	T04	S02	T04	
22	P098	1,000		S02	T04	S02	T04	
23	P099	1,000		S02	T04	S02	T04	
24	P104	1,000		S02	T04	S02	T04	
25	P106	1,000		S02	T04	S02	T04	
26	P113	2,000		S02	T04			

CONTINUE ON REVERSE

Continued from page 2.
NOTE: Photocopy this page before completing if you have more than 26 wastes to list. Form Approved OMB No. 158-S80004

EPA I.D. NUMBER (enter from page 1)	FOR OFFICIAL USE ONLY
W	W DUP 2 DUP

Part B - 10
Section A,-8
ILD000608471

IV. DESCRIPTION OF HAZARDOUS WASTES (continued)

LINE NO.	A. EPA HAZARD. WASTE NO. (enter code)	B. ESTIMATED ANNUAL QUANTITY OF WASTE	C. UNIT OF MEASURE (enter code)	D. PROCESSES 1. PROCESS CODES (enter)	D. PROCESSES 2. PROCESS DESCRIPTION (if a code is not entered in D(1))
1	P 1 1 4	2,000		S 0 2 T 0 4	
2	P 1 1 5	2,000		S 0 2 T 0 4	
3	P 1 2 0	2,000		S 0 2 T 0 4	
4	P 1 2 1	1,000		S 0 2 T 0 4 S 0 2 T 0 4	
5	U 0 0 1	1,000		S 0 2 T 0 4 S 0 2 T 0 4	
6	U 0 0 2	1,000		S 0 2 T 0 4 S 0 2 T 0 4	
7	U 0 3 1	1,000		S 0 2 T 0 4 S 0 2 T 0 4	
8	U 0 5 1	5,000		S 0 2 T 0 4 S 0 2 T 0 4	
9	U 0 5 2	5,000		S 0 2 T 0 4 S 0 2 T 0 4	
10	U 0 5 4	5,000		S 0 2 T 0 4 S 0 2 T 0 4	
11	U 0 5 5	1,000		S 0 2 T 0 4 S 0 2 T 0 4	
12	U 1 1 0	1,000		S 0 2 T 0 4 S 0 2 T 0 4	
13	U 1 1 2	1,000		S 0 2 T 0 4 S 0 2 T 0 4	
14	U 1 1 3	1,000		S 0 2 T 0 4 S 0 2 T 0 4	
15	U 1 2 2	5,000		S 0 2 T 0 4 S 0 2 T 0 4	
16	U 1 3 3	5,000		S 0 2 T 0 4 S 0 2 T 0 4	
17	U 1 3 4	5,000		S 0 2 T 0 4 S 0 2 T 0 4	
18	U 1 4 0	1,000	T	S 0 2 T 0 4 S 0 2	
19	U 1 4 4	50,000	T	S 0 2 T 0 4	
20	U 1 4 5	50,000	T	S 0 2 T 0 4	
21	U 1 4 6	50,000	T	S 0 2 T 0 4	
22	U 1 4 7	50,000	T	S 0 2 T 0 4	
23	U 1 5 1	50,000	T	S 0 2 T 0 4	
24	U 1 6 1	1,000		S 0 2 T 0 4 S 0 2 T 0 4	
25	U 1 6 5	2,000		S 0 2 T 0 4 S 0 2 T 0 4	
26	U 1 6 6	5,000		S 0 2 T 0 4 S 0 2 T 0 4	

CONTINUE ON REVERSE

Continued from page 2.
NOTE: Photocopy this page before completing if you [illegible] more than 26 wastes to list. *Form Approved C*

EPA I.D. NUMBER (enter from page 1)	FOR OFFICIAL USE ONLY
W [illegible] T/A 1	W DUP T/A 2 DUP

Part B - 11
Section A -9
ILD000608471
Revised 7/86

IV. DESCRIPTION OF HAZARDOUS WASTES (continued)

LINE NO.	A. EPA HAZARD. WASTE NO. (enter code)	B. ESTIMATED ANNUAL QUANTITY OF WASTE	C. UNIT OF MEASURE (enter code)	D. PROCESSES 1. PROCESS CODES (enter)	D. PROCESSES 2. PROCESS DESCRIPTION (If a code is not entered in D(1))
1	U188	5,000		S02 T04 S02 T04	
2	U197	5,000		S02 T04 S02 T04	
3	U201	5,000		S02 T04 S02 T04	
4	U204	5,000		S02 T04 S02 T04	
5	U214	10,000		S02 T04	
6	U215	10,000		S02 T04	
7	U216	10,000		S02 T04	
8	U217	10,000		S02 T04	
9	U219	1,000		S02 T04 S02 T04	
10	U220	1,000		S02 T04 S02 T04	
11	U239	1,000		S02 T04 S02 T04	
12	F001	1,000		S02 T04 S02 T04	
13	F002	1,000		S02 T04 S02 T04	
14					
15					
16					
17					
18					
19					
20					
21					
22					
23					
24					
25					
26					

CONTINUE ON REVERSE

Continued from the front.

IV. DESCRIPTION OF HAZARDOUS WASTES (continued)

E. USE THIS SPACE TO LIST ADDITIONAL PROCESS CODES FROM ITEM D(1) ON PAGE 3.

Part B - 12
Section A - 10
ILD000608471

EPA I.D. NO. (enter from page 1)													
F	I	L	D	0	0	0	6	0	8	4	7	1	6

V. FACILITY DRAWING

All existing facilities must include in the space provided on page 5 a scale drawing of the facility *(see instructions for more detail).*

VI. PHOTOGRAPHS

All existing facilities must include photographs *(aerial or ground—level)* that clearly delineate all existing structures; existing storage, treatment and disposal areas; and sites of future storage, treatment or disposal areas *(see instructions for more detail).*

VII. FACILITY GEOGRAPHIC LOCATION

LATITUDE (degrees, minutes, & seconds)	LONGITUDE (degrees, minutes, & seconds)
41 40 44	87 34 46

VIII. FACILITY OWNER

☐ A. If the facility owner is also the facility operator as listed in Section VIII on Form 1, "General Information", place an "X" in the box to the left and skip to Section IX below.

B. If the facility owner is not the facility operator as listed in Section VIII on Form 1, complete the following items:

1. NAME OF FACILITY'S LEGAL OWNER	2. PHONE NO. (area code & no.)
E Chem-Clear, Inc.	215 687 8990

3. STREET OR P.O. BOX	4. CITY OR TOWN	5. ST.	6. ZIP CODE
F 992 Old Eagle School Road	G Wayne,	PA	19087

IX. OWNER CERTIFICATION

I certify under penalty of law that I have personally examined and am familiar with the information submitted in this and all attached documents, and that based on my inquiry of those individuals immediately responsible for obtaining the information, I believe that the submitted information is true, accurate, and complete. I am aware that there are significant penalties for submitting false information, including the possibility of fine and imprisonment.

A. NAME (print or type)	B. SIGNATURE	C. DATE SIGNED
Arun M. Lakhani, V.P.	Arun M. Lakhani	11/3/82

X. OPERATOR CERTIFICATION

I certify under penalty of law that I have personally examined and am familiar with the information submitted in this and all attached documents, and that based on my inquiry of those individuals immediately responsible for obtaining the information, I believe that the submitted information is true, accurate, and complete. I am aware that there are significant penalties for submitting false information, including the possibility of fine and imprisonment.

A. NAME (print or type)	B. SIGNATURE	C. DATE SIGNED
Arun M. Lakhani, V.P.	Arun M. Lakhani	11/3/82

 CONTINUE ON PAGE 5

Part B - 13
Section A - 11
ILD000608471

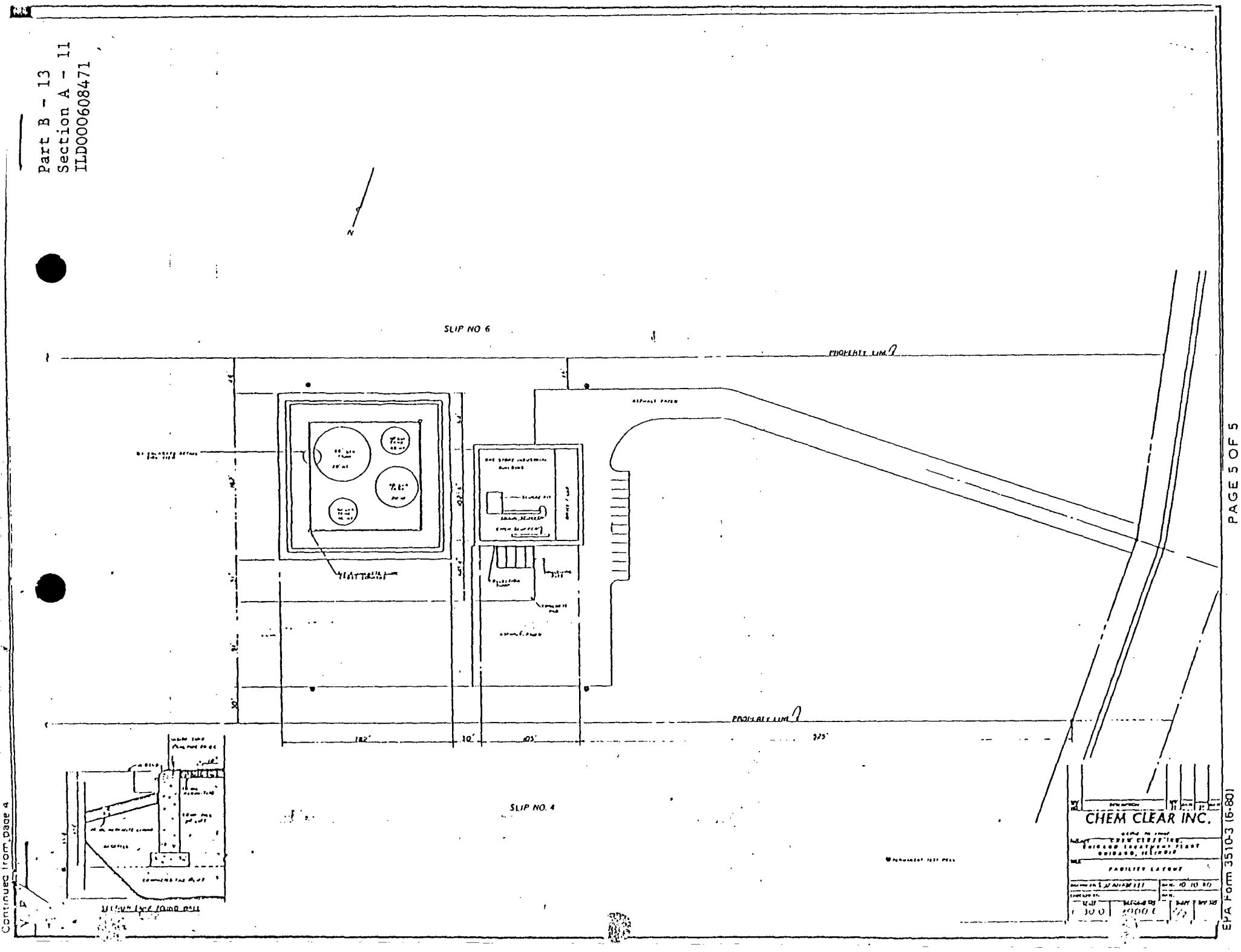

Continued from page 4

Please print or type in the unshaded areas only
(fill-in areas are spaced for elite type, i.e., 12 characters/inch).

Form Approved OMB No. 158-R0175

FORM 1 GENERAL

EPA

U.S. ENVIRONMENTAL PROTECTION AGENCY

GENERAL INFORMATION

Consolidated Permits Program

(Read the "General Instructions" before starting.)

I.D. NUMBER: F ILD000608471 D

LABEL ITEMS

EPA I.D. NUMBER

III. FACILITY NAME

V. FACILITY MAILING ADDRESS

VI. FACILITY LOCATION

PLEASE PLACE LABEL IN THIS SPACE

GENERAL INSTRUCTIONS

If a preprinted l
it in the designa
ation carefully; i
through it and
appropriate fill-i
the preprinted d
left of the labe
that should app
proper fill-in are
complete and correct, you need not complete Items I, III, V, and VI *(except VI-B which must be completed regardless)*. Complete all Items if no label has been provided. Refer to the instructions for detailed item descriptions and for the legal authorizations under which this data is collected.

Part - B - 4
Section A - 2
ILD000608471

II. POLLUTANT CHARACTERISTICS

INSTRUCTIONS: Complete A through J to determine whether you need to submit any permit application forms to the EPA. If you answer "yes" to any questions, you must submit this form and the supplemental form listed in the parenthesis following the question. Mark "X" in the box in the third column if the supplemental form is attached. If you answer "no" to each question, you need not submit any of these forms. You may answer "no" if your activity is excluded from permit requirements; see Section C of the instructions. See also, Section D of the instructions for definitions of bold-faced terms.

SPECIFIC QUESTIONS	MARK 'X' YES	NO	FORM ATTACHED
A. Is this facility a publicly owned treatment works which results in a discharge to waters of the U.S.? (FORM 2A)		X	
B. Does or will this facility *(either existing or proposed)* include a concentrated animal feeding operation or aquatic animal production facility which results in a discharge to waters of the U.S.? (FORM 2B)		X	
C. Is this a facility which currently results in discharges to waters of the U.S. other than those described in A or B above? (FORM 2C)		X	
D. Is this a proposed facility *(other than those described in A or B above)* which will result in a discharge to waters of the U.S.? (FORM 2D)		X	
E. Does or will this facility treat, store, or dispose of hazardous wastes? (FORM 3)	X		
F. Do you or will you inject at this facility industrial or municipal effluent below the lowermost stratum containing, within one quarter mile of the well bore, underground sources of drinking water? (FORM 4)		X	
G. Do you or will you inject at this facility any produced water or other fluids which are brought to the surface in connection with conventional oil or natural gas production, inject fluids used for enhanced recovery of oil or natural gas, or inject fluids for storage of liquid hydrocarbons? (FORM 4)		X	
H. Do you or will you inject at this facility fluids for special processes such as mining of sulfur by the Frasch process, solution mining of minerals, in situ combustion of fossil fuel, or recovery of geothermal energy? (FORM 4)		X	
I. Is this facility a proposed stationary source which is one of the 28 industrial categories listed in the instructions and which will potentially emit 100 tons per year of any air pollutant regulated under the Clean Air Act and may affect or be located in an attainment area? (FORM 5)		X	
J. Is this facility a proposed stationary source which is NOT one of the 28 industrial categories listed in the instructions and which will potentially emit 250 tons per year of any air pollutant regulated under the Clean Air Act and may affect or be located in an attainment area? (FORM 5)		X	

III. NAME OF FACILITY

1 SKIP CHEM CLEAR INC

IV. FACILITY CONTACT

A. NAME & TITLE *(last, first, & title)*	B. PHONE *(area code & no.)*
2 CORDING CARL R PRESIDENT	215 687 8990

V. FACILITY MAILING ADDRESS

A. STREET OR P.O. BOX: 3 992 OLD EAGLE SCHOOL ROAD

B. CITY OR TOWN	C. STATE	D. ZIP CODE
4 WAYNE	PA	19087

VI. FACILITY LOCATION

A. STREET, ROUTE NO. OR OTHER SPECIFIC IDENTIFIER: 5 11800 S STONY ISLAND AVENUE

B. COUNTY NAME: COOK

C. CITY OR TOWN	D. STATE	E. ZIP CODE	F. COUNTY CODE *(if known)*
6 CHICAGO	IL	60617	

CONTINUED FROM THE FRONT

Part - B - 5
Section A - 3
ILD000608471

VII. SIC CODES *(4-digit, in order of priority)*

A. FIRST	B. SECOND
4953 (specify) Refuse Collection	(specify)
C. THIRD	**D. FOURTH**
(specify)	(specify)

VIII. OPERATOR INFORMATION

A. NAME: CHEM CLEAR INC

B. Is the name listed in Item VIII-A also the owner? [XX] YES [ ] NO

C. STATUS OF OPERATOR *(Enter the appropriate letter into the answer box; if "Other", specify.)*
F = FEDERAL
S = STATE
P = PRIVATE
M = PUBLIC *(other than federal or state)*
O = OTHER *(specify)*

P (specify)

D. PHONE *(area code & no.)*: A 215 687 8990

E. STREET OR P.O. BOX: 992 OLD EAGLE SCHOOL ROAD

F. CITY OR TOWN: WAYNE

G. STATE: PA

H. ZIP CODE: 19087

IX. INDIAN LAND

Is the facility located on Indian lands? [ ] YES [X] NO

X. EXISTING ENVIRONMENTAL PERMITS

A. NPDES *(Discharges to Surface Water)*	D. PSD *(Air Emissions from Proposed Sources)*	
N	P	
B. UIC *(Underground Injection of Fluids)*	E. OTHER *(specify)*	
U	1980-36-DE	(specify) IL. Dev. Permit
C. RCRA *(Hazardous Wastes)*	E. OTHER *(specify)*	
	589202	(specify) Const. Permit

XI. MAP

Attach to this application a topographic map of the area extending to at least one mile beyond property bounderies. The map must show the outline of the facility, the location of each of its existing and proposed intake and discharge structures, each of its hazardous waste treatment, storage, or disposal facilities, and each well where it injects fluids underground. Include all springs, rivers and other surface water bodies in the map area. See instructions for precise requirements.

XII. NATURE OF BUSINESS *(provide a brief description)*

Chem-Clear, Inc. receives and chemically pretreats industrial waste water and sludges. The company discharges its effluent to the Metropolitan Sanitary District of Greater Chicago. The sludges generated and the sludges received are dewatered and transported to a landfill.

XIII. CERTIFICATION *(see instructions)*

I certify under penalty of law that I have personally examined and am familiar with the information submitted in this application and all attachments and that, based on my inquiry of those persons immediately responsible for obtaining the information contained in the application, I believe that the information is true, accurate and complete. I am aware that there are significant penalties for submitting false information, including the possibility of fine and imprisonment.

A. NAME & OFFICIAL TITLE *(type or print)*	B. SIGNATURE	C. DATE SIGNED
Arun M. Lakhani, V.P. Engineering	Arun Lakhani	11/3/82

COMMENTS FOR OFFICIAL USE ONLY

Please print or type in the unshaded areas only
(fill—in areas are spaced for elite type, i.e., 12 characters per inch).

Form Approved OMB No. 158-S80004

FORM 3 RCRA

EPA

U.S. ENVIRONMENTAL PROTECTION AGENCY

HAZARDOUS WASTE PERMIT APPLICATION

Consolidated Permits Program

(This information is required under Section 3005 of RCRA.)

I. EPA I.D. NUMBER: F I L D 0 0 0 6 0 8 4 7 1

FOR OFFICIAL USE ONLY

APPLICATION APPROVED	DATE RECEIVED (yr., mo., & day)	COMMENTS

Part - B - 6
Section A - 4
ILD000608471

II. FIRST OR REVISED APPLICATION

Place an "X" in the appropriate box in A or B below *(mark one box only)* to indicate whether this is the first application you are submitting for your facility or a revised application. If this is your first application and you already know your facility's EPA I.D. Number, or if this is a revised application, enter your facility's EPA I.D. Number in Item I above.

A. FIRST APPLICATION *(place an "X" below and provide the appropriate date)*

[X] 1. EXISTING FACILITY *(See instructions for definition of "existing" facility. Complete item below.)*

FOR EXISTING FACILITIES, PROVIDE THE DATE *(yr., mo., & day)* OPERATION BEGAN OR THE DATE CONSTRUCTION COMMENCED *(use the boxes to the left)*

C 8 | YR. | MO. | DAY

[ ] 2. NEW FACILITY *(Complete item below.)*

FOR NEW FACILITIES, PROVIDE THE DATE *(yr., mo., & day)* OPERATION BEGAN OR IS EXPECTED TO BEGIN

YR.	MO.	DAY

B. REVISED APPLICATION *(place an "X" below and complete Item I above)*

[XX] 1. FACILITY HAS INTERIM STATUS

[ ] 2. FACILITY HAS A RCRA PERMIT

III. PROCESSES – CODES AND DESIGN CAPACITIES

A. PROCESS CODE – Enter the code from the list of process codes below that best describes each process to be used at the facility. Ten lines are provided for entering codes. If more lines are needed, enter the code(s) in the space provided. If a process will be used that is not included in the list of codes below, then describe the process *(including its design capacity)* in the space provided on the form *(Item III-C)*.

B. PROCESS DESIGN CAPACITY – For each code entered in column A enter the capacity of the process.

1. AMOUNT – Enter the amount.
2. UNIT OF MEASURE – For each amount entered in column B(1), enter the code from the list of unit measure codes below that describes the unit of measure used. Only the units of measure that are listed below should be used.

PROCESS	PROCESS CODE	APPROPRIATE UNITS OF MEASURE FOR PROCESS DESIGN CAPACITY
Storage:		
CONTAINER *(barrel, drum, etc.)*	S01	GALLONS OR LITERS
TANK	S02	GALLONS OR LITERS
WASTE PILE	S03	CUBIC YARDS OR CUBIC METERS
SURFACE IMPOUNDMENT	S04	GALLONS OR LITERS
Disposal:		
INJECTION WELL	D79	GALLONS OR LITERS
LANDFILL	D80	ACRE-FEET *(the volume that would cover one acre to a depth of one foot)* OR HECTARE-METER
LAND APPLICATION	D81	ACRES OR HECTARES
OCEAN DISPOSAL	D82	GALLONS PER DAY OR LITERS PER DAY
SURFACE IMPOUNDMENT	D83	GALLONS OR LITERS

PROCESS	PROCESS CODE	APPROPRIATE UNITS OF MEASURE FOR PROCESS DESIGN CAPACITY
Treatment:		
TANK	T01	GALLONS PER DAY OR LITERS PER DAY
SURFACE IMPOUNDMENT	T02	GALLONS PER DAY OR LITERS PER DAY
INCINERATOR	T03	TONS PER HOUR OR METRIC TONS PER HOUR; GALLONS PER HOUR OR LITERS PER HOUR
OTHER *(Use for physical, chemical, thermal or biological treatment processes not occurring in tanks, surface impoundments or incinerators. Describe the processes in the space provided; Item III-C.)*	T04	GALLONS PER DAY OR LITERS PER DAY

UNIT OF MEASURE	UNIT OF MEASURE CODE	UNIT OF MEASURE	UNIT OF MEASURE CODE	UNIT OF MEASURE	UNIT OF MEASURE CODE
GALLONS	G	LITERS PER DAY	V	ACRE-FEET	A
LITERS	L	TONS PER HOUR	D	HECTARE-METER	F
CUBIC YARDS	Y	METRIC TONS PER HOUR	W	ACRES	B
CUBIC METERS	C	GALLONS PER HOUR	E	HECTARES	Q
GALLONS PER DAY	U	LITERS PER HOUR	H		

EXAMPLE FOR COMPLETING ITEM III *(shown in line numbers X-1 and X-2 below)*: A facility has two storage tanks, one tank can hold 200 gallons and the other can hold 400 gallons. The facility also has an incinerator that can burn up to 20 gallons per hour.

C DUP 1

LINE NUMBER	A. PROCESS CODE (from list above)	B. PROCESS DESIGN CAPACITY 1. AMOUNT (specify)	B. 2. UNIT OF MEASURE (enter code)	FOR OFFICIAL USE ONLY	LINE NUMBER	A. PROCESS CODE (from list above)	B. PROCESS DESIGN CAPACITY 1. AMOUNT	B. 2. UNIT OF MEASURE (enter code)	FOR OFFICIAL USE ONLY
X-1	S 0 2	600	G		5				
X-2	T 0 3	20	E		6				
1	S 0 2	1,000,000	G		7				
2	T 0 4	600,000	U		8				
3					9				
4					10				

CONTINUE ON REVERSE

Continued from the front.

III. PROCESSES *(continued)*

C. SPACE FOR ADDITIONAL PROCESS CODES OR FOR DESCRIBING OTHER PROCESSES *(code "T04")*. FOR EACH PROCESS ENTERED HERE INCLUDE DESIGN CAPACITY.

I - Chemical Treatment T04
- A. Compatibility treatment to 200,000 GPD
  - 1. Neutralization of acids/alkalis
  - 2. Oxidation (chemical)
    - a. Cynaides
    - b. Sulfides
    - c. Thiols
    - d. Hydroquinones
    - e. Phenols
    - f. Aldehydes
    - g. Cresols
    - h. Other Organics
  - 3. Reduction
    - a. Hexchrome
- B. Mixed Treatment to 400,000 GPD
  - 1. pH adjustment (metal precipitation)

II - Sludge Treatment to 100,000 GPD
- A. Dewatering with Polymer microencapsulation
- B. Lime fixation

Part B - 7
Section A - 5
ILD000608471

IV. DESCRIPTION OF HAZARDOUS WASTES

A. **EPA HAZARDOUS WASTE NUMBER** – Enter the four–digit number from 40 CFR, Subpart D for each listed hazardous waste you will handle. If you handle hazardous wastes which are not listed in 40 CFR, Subpart D, enter the four–digit number*(s)* from 40 CFR, Subpart C that describes the characteristics and/or the toxic contaminants of those hazardous wastes.

B. **ESTIMATED ANNUAL QUANTITY** – For each **listed waste** entered in column A estimate the quantity of that waste that will be handled on an annual basis. For each **characteristic** or **toxic contaminant** entered in column A estimate the total annual quantity of all the non–listed waste*(s)* that will be handled which possess that characteristic or contaminant.

C. **UNIT OF MEASURE** – For each quantity entered in column B enter the unit of measure code. Units of measure which must be used and the appropriate codes are:

ENGLISH UNIT OF MEASURE	CODE	METRIC UNIT OF MEASURE	CODE
POUNDS	P	KILOGRAMS	K
TONS	T	METRIC TONS	M

If facility records use any other unit of measure for quantity, the units of measure must be converted into one of the required units of measure taking into account the appropriate density or specific gravity of the waste.

D. **PROCESSES**

1. PROCESS CODES:
   For listed hazardous waste: For each **listed** hazardous waste entered in column A select the code*(s)* from the list of process codes contained in Item III to indicate how the waste will be stored, treated, and/or disposed of at the facility.
   For non–listed hazardous wastes: For each characteristic or toxic contaminant entered in column A, select the code*(s)* from the list of process codes contained in Item III to indicate **all** the processes that will be used to store, treat, and/or dispose of all the non–listed hazardous wastes that possess that characteristic or toxic contaminant.
   Note: Four spaces are provided for entering process codes. If more are needed: (1) Enter the first three as described above; (2) Enter "000" in the extreme right box of Item IV-D(1); and (3) Enter in the space provided on page 4, the line number and the additional code*(s)*.

2. PROCESS DESCRIPTION: If a code is not listed for a process that will be used, describe the process in the space provided on the form.

NOTE: HAZARDOUS WASTES DESCRIBED BY MORE THAN ONE EPA HAZARDOUS WASTE NUMBER – Hazardous wastes that can be described by more than one EPA Hazardous Waste Number shall be described on the form as follows:

1. Select one of the EPA Hazardous Waste Numbers and enter it in column A. On the same line complete columns B,C, and D by estimating the total annual quantity of the waste and describing all the processes to be used to treat, store, and/or dispose of the waste.
2. In column A of the next line enter the other EPA Hazardous Waste Number that can be used to describe the waste. In column D(2) on that line enter "included with above" and make no other entries on that line.
3. Repeat step 2 for each other EPA Hazardous Waste Number that can be used to describe the hazardous waste.

EXAMPLE FOR COMPLETING ITEM IV *(shown in line numbers X-1, X-2, X-3, and X-4 below)* – A facility will treat and dispose of an estimated 900 pounds per year of chrome shavings from leather tanning and finishing operation. In addition, the facility will treat and dispose of three non–listed wastes. Two wastes are corrosive only and there will be an estimated 200 pounds per year of each waste. The other waste is corrosive and ignitable and there will be an estimated 100 pounds per year of that waste. Treatment will be in an incinerator and disposal will be in a landfill.

LINE NO.	A. EPA HAZARD. WASTE NO. (enter code)	B. ESTIMATED ANNUAL QUANTITY OF WASTE	C. UNIT OF MEASURE (enter code)	D. PROCESSES 1. PROCESS CODES (enter)	D. PROCESSES 2. PROCESS DESCRIPTION (if a code is not entered in D(1))
X-1	K054	900	P	T03 D80	
	D002	400	P	T03 D80	
X-3	D001	100	P	T03 D80	
X-4	D002				included with above

CONTINUE ON PAGE 3

Continued from page 2.
NOTE. Photocopy this page before completing if you have more than 26 wastes to list.

Form Approved OMB No. 158-S80004

EPA I.D. NUMBER (enter from page 1)	FOR OFFICIAL USE ONLY
W 1	W DUP 2 DUP

Part B - 8
Section A - 6
ILD000608471

V. DESCRIPTION OF HAZARDOUS WASTES (continued)

LINE NO.	A. EPA HAZARD. WASTE NO. (enter code)	B. ESTIMATED ANNUAL QUANTITY OF WASTE	C. UNIT OF MEASURE (enter code)	D. PROCESSES 1. PROCESS CODES (enter)	D. PROCESSES 2. PROCESS DESCRIPTION (if a code is not entered in D(1))
1	D001	1,000	T	S02 T04 S02 T04	
2	D002	40,000	T	S02 T04 S02 T04	
3	D003	1,000	T	S02 T04 S02 T04	
4	D004	6,000	T	S02 T04	
5	D005	1,000	T	S02 T04	
6	D006	2,000	T	S02 T04	
7	D007	6,000	T	S02 T04 S02 T04	
8	D007	2,000	T	S02 T04	
9	D008	2,000	T	S02 T04	
10	D009	1,000	T	S02 T04	
11	D010	1,000	T	S02 T04	
12	D011	1,000	T	S02 T04	
13	F003	1,000	T	S02 T04 S02 T04	
14	F004	1,000	T	S02 T04 S02 T04	
15	F005	1,000	T	S02 T04 S02 T04	
16	F006	10,000	T	S02 T04 S02 T04	
17	F007	1,000	T	S02 T04 S02 T04	
18	F008	1,000	T	S02 T04 S02 T04	
19	F009	1,000	T	S02 T04 S02 T04	
20	F010	1,000	T	S02 T04 S02 T04	
21	F011	1,000	T	S02 T04 S02 T04	
22	F012	1,000	T	S02 T04	
23	F015	1,000	T	S02 T04 S02 T04	
24	F019	1,000	T	S02 T04	
25	K002	2,000	T	S02 T04 S02 T04	
26	K003	2,000	T	S02 T04 S02 T04	

EPA Form 3510-3 (6-80)

CONTINUE ON REVERSE

Continued from page 2.
NOTE: Photocopy this page before completing if you have more than 26 wastes to list.

Form Approved OMB No. 158-S80004

EPA I.D. NUMBER (enter from page 1)	FOR OFFICIAL USE ONLY
W	W DUP 2 DUP

Part B - 9
Section A - 7
ILD000608471

IV. DESCRIPTION OF HAZARDOUS WASTES (continued)

LINE NO.	A. EPA HAZARD. WASTE NO. (enter code)	B. ESTIMATED ANNUAL QUANTITY OF WASTE	C. UNIT OF MEASURE (enter code)	D. PROCESSES 1. PROCESS CODES (enter)	D. PROCESSES 2. PROCESS DESCRIPTION (if a code is not entered in D(1))
1	K004	2,000	T	S02 T04 S02 T04	
2	K005	2,000	T	S02 T04 S02 T04	
3	K006	2,000	T	S02 T04 S02 T04	
4	K007	2,000	T	S02 T04 S02 T04	
5	K008	2,000	T	S02 T04 S02 T04	
6	K071	2,000	T	S02 T04	
7	K106	2,000	T	S02 T04	
8	K061	5,000	T	S02 T04 S02 T04	
9	K062	5,000	T	S02 T04 S02 T04	
10	K069	5,000	T	S02 T04 S02 T04	
11	K100	5,000	T	S02 T04 S02 T04	
12	K086	5,000	T	S02 T04 S02 T04	
13	K060	1,000	T	S02 T04 S02 T04	
14	K087	1,000	T	S02 T04 S02 T04	
15	P012	5,000	T	S02 T04	
16	P013	1,000	T	S02 T04 S02 T04	
17	P015	5,000	T	S02 T04	
18	P021	1,000	T	S02 T04 S02 T04	
19	P029	1,000	T	S02 T04 S02 T04	
20	P030	1,000	T	S02 T04 S02 T04	
21	P074	1,000	T	S02 T04 S02 T04	
22	P098	1,000		S02 T04 S02 T04	
23	P099	1,000		S02 T04 S02 T04	
24	P104	1,000		S02 T04 S02 T04	
25	P106	1,000		S02 T04 S02 T04	
26	P113	2,000		S02 T04	

CONTINUE ON REVERSE

Continued from page 2.

NOTE: Photocopy this page before completing if you have more than 26 wastes to list.

Form Approved OMB No. 158-S80004

EPA I.D. NUMBER (enter from page 1)	FOR OFFICIAL USE ONLY
W	W DUP DUP

Part B - 10
Section A -8
ILD000608471

V. DESCRIPTION OF HAZARDOUS WASTES (continued)

LINE NO.	A. EPA HAZARD. WASTE NO. (enter code)	B. ESTIMATED ANNUAL QUANTITY OF WASTE	C. UNIT OF MEASURE (enter code)	D. PROCESSES 1. PROCESS CODES (enter)	D. PROCESSES 2. PROCESS DESCRIPTION (if a code is not entered in D(1))
1	P114	2,000		S02 T04	
2	P115	2,000		S02 T04	
3	P120	2,000		S02 T04	
4	P121	1,000		S02 T04 S02 T04	
5	U001	1,000		S02 T04 S02 T04	
6	U002	1,000		S02 T04 S02 T04	
7	U031	1,000		S02 T04 S02 T04	
8	U051	5,000		S02 T04 S02 T04	
9	U052	5,000		S02 T04 S02 T04	
10	U054	5,000		S02 T04 S02 T04	
11	U055	1,000		S02 T04 S02 T04	
12	U110	1,000		S02 T04 S02 T04	
13	U112	1,000		S02 T04 S02 T04	
14	U113	1,000		S02 T04 S02 T04	
15	U122	5,000		S02 T04 S02 T04	
16	U133	5,000		S02 T04 S02 T04	
17	U134	5,000		S02 T04 S02 T04	
18	U140	1,000	T	S02 T04 S02	
19	U144	50,000	T	S02 T04	
20	U145	50,000	T	S02 T04	
21	U146	50,000	T	S02 T04	
22	U147	50,000	T	S02 T04	
23	U151	50,000	T	S02 T04	
24	U161	1,000		S02 T04 S02 T04	
25	U165	2,000		S02 T04 S02 T04	
26	U166	5,000		S02 T04 S02 T04	

CONTINUE ON REVERSE

Continued from page 2.
NOTE: Photocopy this page before completing if you have more than 26 wastes to list.

Form Approved C

Part B - 11
Section A -9
ILD000608471

EPA I.D. NUMBER (enter from page 1)	FOR OFFICIAL USE ONLY
W 1 2 - 13 T/A 14 C 15	W DUP T/A 14 C 15 2 DUP 23 - 28

IV. DESCRIPTION OF HAZARDOUS WASTES (continued)

LINE NO.	A. EPA HAZARD. WASTE NO. (enter code) 23 - 26	B. ESTIMATED ANNUAL QUANTITY OF WASTE 27 - 35	C. UNIT OF MEASURE (enter code) 36	D. PROCESSES 1. PROCESS CODES (enter) 27 - 29 / 27 - 29 / 27 - 29 / 27 - 29	2. PROCESS DESCRIPTION (If a code is not entered in D(1))
1	U188	5,000		S02 T04 S02 T04	
2	U197	5,000		S02 T04 S02 T04	
3	U201	5,000		S02 T04 S02 T04	
4	U204	5,000		S02 T04 S02 T04	
5	U214	10,000		S02 T04	
6	U215	10,000		S02 T04	
7	U216	10,000		S02 T04	
8	U217	10,000		S02 T04	
9	U219	1,000		S02 T04 S02 T04	
10	U220	1,000		S02 T04 S02 T04	
11	U239	1,000		S02 T04 S02 T04	
12					
13					
14					
15					
16					
17					
18					
19					
20					
21					
22					
23					
24					
25					
26					

CONTINUE ON REVERS

Continued from the front.

IV. DESCRIPTION OF HAZARDOUS WASTES *(continued)*

E. USE THIS SPACE TO LIST ADDITIONAL PROCESS CODES FROM ITEM D(1) ON PAGE 3.

Part B - 12
Section A - 10
ILD000608471

EPA I.D. NO. *(enter from page 1)*

F I L D 0 0 0 6 0 8 4 7 1 T/A C 6

V. FACILITY DRAWING

All existing facilities must include in the space provided on page 5 a scale drawing of the facility *(see instructions for more detail).*

VI. PHOTOGRAPHS

All existing facilities must include photographs *(aerial or ground—level)* that clearly delineate all existing structures; existing storage, treatment and disposal areas; and sites of future storage, treatment or disposal areas *(see instructions for more detail).*

VII. FACILITY GEOGRAPHIC LOCATION

LATITUDE *(degrees, minutes, & seconds)*	LONGITUDE *(degrees, minutes, & seconds)*
41 40 44	87 34 46

VIII. FACILITY OWNER

☐ A. If the facility owner is also the facility operator as listed in Section VIII on Form 1, "General Information", place an "X" in the box to the left and skip to Section IX below.

B. If the facility owner is not the facility operator as listed in Section VIII on Form 1, complete the following items:

1. NAME OF FACILITY'S LEGAL OWNER	2. PHONE NO. *(area code & no.)*
E Chem-Clear, Inc.	2 1 5 - 6 8 7 - 8 9 9 0

3. STREET OR P.O. BOX	4. CITY OR TOWN	5. ST.	6. ZIP CODE
F 992 Old Eagle School Road	G Wayne,	PA	19087

IX. OWNER CERTIFICATION

I certify under penalty of law that I have personally examined and am familiar with the information submitted in this and all attached documents, and that based on my inquiry of those individuals immediately responsible for obtaining the information, I believe that the submitted information is true, accurate, and complete. I am aware that there are significant penalties for submitting false information, including the possibility of fine and imprisonment.

A. NAME *(print or type)*	B. SIGNATURE	C. DATE SIGNED
Arun M. Lakhani, V.P.	Arun M. Lakhani	11/3/82

X. OPERATOR CERTIFICATION

I certify under penalty of law that I have personally examined and am familiar with the information submitted in this and all attached documents, and that based on my inquiry of those individuals immediately responsible for obtaining the information, I believe that the submitted information is true, accurate, and complete. I am aware that there are significant penalties for submitting false information, including the possibility of fine and imprisonment.

A. NAME *(print or type)*	B. SIGNATURE	C. DATE SIGNED
Arun M. Lakhani, V.P.	Arun M. Lakhani	11/3/82

CONTINUE ON PAGE 5

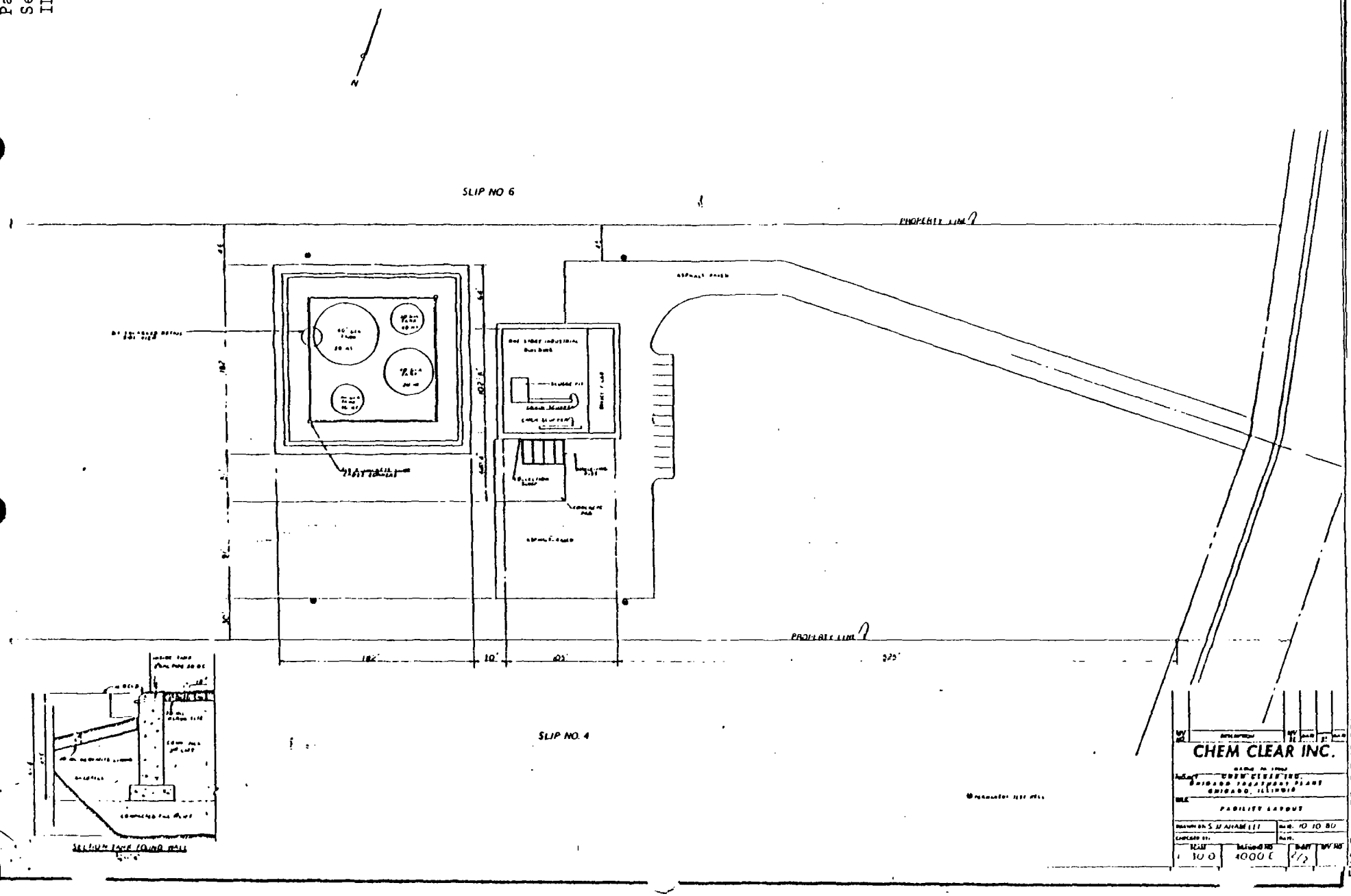

Continued from page 4

NATURE OF HAZARDOUS WASTE ACTIVITIES

ChemClear, Inc. of Chicago is a privately owned pretreatment plant. It processes only aqueous based wastes that are water miscible or dispersable. ChemClear does not accept any waste that contains pesticides, herbicides, PCBs, or radioactive components.

Processing includes chemical oxidation of hazardous inorganics and organics, neutralization of strong acids and bases, and precipitation of metals and suspended solids. Processing occurs in two steps: first, each separate waste stream is rendered non-reactive and compatible by chemical oxidation and/or neutralization and/or reduction reactions; then, the streams are mixed and treated as to precipitate metals and suspended solids. The sludge produced (precipitated solids) is dewatered to render suitable for landfill. The effluent is discharged into the Metropolitan Sewage District of Greater Chicago.

TYPES OF INDUSTRIES SERVED

ChemClear, Inc. accepts hazardous and non-hazardous aqueous wastes from the following types of industries.

Chemical Manufacturing
Chemical Formulating
Steel Manufacturing
Metal Working & Finishing
Plating
Electronics
Paint & Pigment
Pharmaceutical
Plastics
Paper & Pulp
Landfill Leachate
Food Processors & Printing

However, none of the waste streams are accepted without the stringent detail analysis of the waste stream and the assurance of its compatibility with the system. The analysis scheme is discussed in Section C - Waste Characteristics.

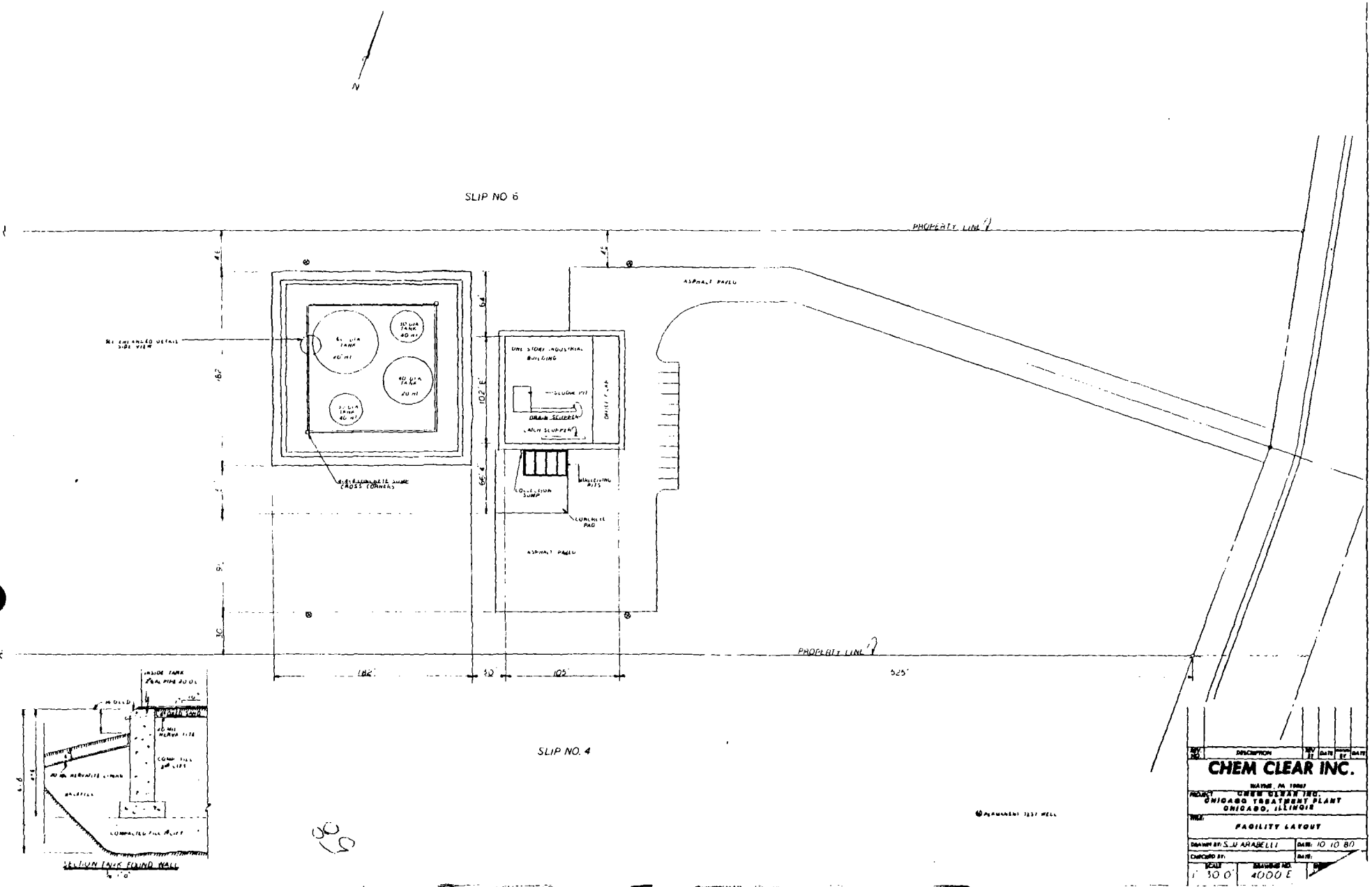
SLIP NO 6
PROPERTY LINE
ASPHALT PAVED
SEE ENLARGED DETAIL SIDE VIEW
ONE STORY INDUSTRIAL BUILDING
SLUDGE PIT
DRAIN SCREEN
LATCH SCUPPER
COLLECTION SUMP
SINGLE STING PITS
CONCRETE PAD
ASPHALT PAVED
PROPERTY LINE
182'
10'
105'
525'
102' 6"
66' 4"
SLIP NO. 4
INSIDE TANK
CONCRETE
40 MIL HERVA FITE
CONC FILL
40 MIL HERVAFITE LINER
BACKFILL
COMPACTED FILL ALIFT
HELIUM TANK FOUND WALL
CHEM CLEAR INC.
CHEM CLEAR INC.
CHICAGO TREATMENT PLANT
CHICAGO, ILLINOIS
FACILITY LAYOUT
DRAWN BY: S.J. ARABELLI
DATE: 10 10 80
SCALE: 1" 30'0"
DRAWING NO. 4000 E

FORM 1 GENERAL

EPA

U.S. ENVIRONMENTAL PROTECTION AGENCY

GENERAL INFORMATION

Consolidated Permits Program

(Read the "General Instructions" before starting.)

I. EPA I.D. NUMBER: I L D 0 0 0 6 0 8 4 7 1 — F/A 3, C D

LABEL ITEMS

I. EPA I.D. NUMBER

III. FACILITY NAME

V. FACILITY MAILING ADDRESS

VI. FACILITY LOCATION

PLEASE PLACE LABEL IN THIS SPACE

58

GENERAL INSTRUCTIONS

If a preprinted label has been provided, affix it in the designated space. Review the information carefully; if any of it is incorrect, cross through it and enter the correct data in the appropriate fill-in area below. Also, if any of the preprinted data is absent *(the area to the left of the label space lists the information that should appear)*, please provide it in the proper fill-in area(s) below. If the label is complete and correct, you need not complete Items I, III, V, and VI *(except VI-B which must be completed regardless)*. Complete all items if no label has been provided. Refer to the instructions for detailed item descriptions and for the legal authorizations under which this data is collected.

II. POLLUTANT CHARACTERISTICS

INSTRUCTIONS: Complete A through J to determine whether you need to submit any permit application forms to the EPA. If you answer "yes" to any questions, you must submit this form and the supplemental form listed in the parenthesis following the question. Mark "X" in the box in the third column if the supplemental form is attached. If you answer "no" to each question, you need not submit any of these forms. You may answer "no" if your activity is excluded from permit requirements; see Section C of the instructions. See also, Section D of the instructions for definitions of **bold-faced terms**.

SPECIFIC QUESTIONS	MARK 'X' YES	NO	FORM ATTACHED	SPECIFIC QUESTIONS	MARK 'X' YES	NO	FORM ATTACHED
A. Is this facility a **publicly owned treatment works** which results in a **discharge** to **waters of the U.S.**? (FORM 2A)		XX		B. Does or will this facility *(either existing or proposed)* include a **concentrated animal feeding operation** or **aquatic animal production facility** which results in a discharge to waters of the U.S.? (FORM 2B)		XX	
C. Is this a facility which currently results in **discharges** to **waters of the U.S.** other than those described in A or B above? (FORM 2C)		XX		D. Is this a proposed facility *(other than those described in A or B above)* which will result in a **discharge** to **waters of the U.S.**? (FORM 2D)		XX	
E. Does or will this facility treat, store, or dispose of **hazardous wastes**? (FORM 3)	XX		XX	F. Do you or will you inject at this facility industrial or municipal effluent below the lowermost stratum containing, within one quarter mile of the well bore, underground sources of drinking water? (FORM 4)		XX	
G. Do you or will you inject at this facility any produced water or other fluids which are brought to the surface in connection with conventional oil or natural gas production, inject fluids used for enhanced recovery of oil or natural gas, or inject fluids for storage of liquid hydrocarbons? (FORM 4)		XX		H. Do you or will you inject at this facility fluids for special processes such as mining of sulfur by the Frasch process, solution mining of minerals, in situ combustion of fossil fuel, or recovery of geothermal energy? (FORM 4)		XX	
I. Is this facility a proposed **stationary source** which is one of the 28 industrial categories listed in the instructions and which will potentially emit 100 tons per year of any air pollutant regulated under the Clean Air Act and may affect or be located in an attainment area? (FORM 5)		XX		J. Is this facility a proposed **stationary source** which is NOT one of the 28 industrial categories listed in the instructions and which will potentially emit 250 tons per year of any air pollutant regulated under the Clean Air Act and may affect or be located in an attainment area? (FORM 5)		XX	

III. NAME OF FACILITY

1 SKIP CHEM-CLEAR INC.

IV. FACILITY CONTACT

A. NAME & TITLE *(last, first, & title)*	B. PHONE *(area code & no.)*
2 CORDING CARL R. EXEC VICE PRES	215 687 8990

V. FACILITY MAILING ADDRESS

A. STREET OR P.O. BOX: 3 992 OLD EAGLE SCHOOL ROAD

B. CITY OR TOWN	C. STATE	D. ZIP CODE
4 WAYNE	PA	19087

VI. FACILITY LOCATION

A. STREET, ROUTE NO. OR OTHER SPECIFIC IDENTIFIER: 5 118 STREET & STONEY ISLAND RD

B. COUNTY NAME: 0 0 1 K C. COOK CO.

C. CITY OR TOWN	D. STATE	E. ZIP CODE	F. COUNTY CODE *(if known)*
6 CHICAGO	IL	60633	031

EPA Form 3510-1 (6-80)

NOV 17 1980

CONTINUE ON REVERSE

A. FIRST	B. SECOND
7 4953 (specify) Refuse Collection	7 (specify)
C. THIRD	**D. FOURTH**
7 (specify)	7 (specify)

VIII. OPERATOR INFORMATION

A. NAME: 8 CHEMCLEAR, INC.

B. Is the name listed in Item VIII-A also the owner? [XX] YES [ ] NO

C. STATUS OF OPERATOR *(Enter the appropriate letter into the answer box; if "Other", specify.)*
F = FEDERAL
S = STATE
P = PRIVATE
M = PUBLIC *(other than federal or state)*
O = OTHER *(specify)*
P (specify)

D. PHONE *(area code & no.)*: A 215 687 8990

E. STREET OR P.O. BOX: 992 OLD EAGLE SCHOOL ROAD

F. CITY OR TOWN: B WAYNE

G. STATE: PA

H. ZIP CODE: 19087

IX. INDIAN LAND

Is the facility located on Indian lands? [ ] YES [XX] NO

X. EXISTING ENVIRONMENTAL PERMITS

A. NPDES *(Discharges to Surface Water)*: 9 N	**D. PSD** *(Air Emissions from Proposed Sources)*: 9 P
B. UIC *(Underground Injection of Fluids)*: 9 U	**E. OTHER** *(specify)*: 9 Z 1980-36-DE (specify) IL. Dev. Permit
C. RCRA *(Hazardous Wastes)*: 9 R	**E. OTHER** *(specify)*: 9 Z 589202 (specify) Const. Permit

XI. MAP

Attach to this application a topographic map of the area extending to at least one mile beyond property boundaries. The map must show the outline of the facility, the location of each of its existing and proposed intake and discharge structures, each of its hazardous waste treatment, storage, or disposal facilities, and each well where it injects fluids underground. Include all springs, rivers and other surface water bodies in the map area. See instructions for precise requirements.

F9: A/50

XII. NATURE OF BUSINESS *(provide a brief description)*

CHEMCLEAR, INC. is an industrial waste water treatment facility which accepts and treats industrial waste water generated by a variety of generators.

F9: A/51

XIII. CERTIFICATION *(see instructions)*

I certify under penalty of law that I have personally examined and am familiar with the information submitted in this application and all attachments and that, based on my inquiry of those persons immediately responsible for obtaining the information contained in the application, I believe that the information is true, accurate and complete. I am aware that there are significant penalties for submitting false information, including the possibility of fine and imprisonment.

A. NAME & OFFICIAL TITLE *(type or print)*	B. SIGNATURE	C. DATE SIGNED
CARL R. CORDING, EXEC. VICE PRES.		11/5/80

COMMENTS FOR OFFICIAL USE ONLY

C

FORM 3 RCRA

EPA

HAZARDOUS WASTE PERMIT APPLICATION

Consolidated Permits Program

(This information is required under Section 3005 of RCRA.)

I. EPA I.D. NUMBER: I L D 0 0 0 6 0 8 4 7 1 3 1

FOR OFFICIAL USE ONLY

APPLICATION APPROVED	DATE RECEIVED (yr., mo., & day)	COMMENTS

II. FIRST OR REVISED APPLICATION

Place an "X" in the appropriate box in A or B below *(mark one box only)* to indicate whether this is the first application you are submitting for your facility or a revised application. If this is your first application and you already know your facility's EPA I.D. Number, or if this is a revised application, enter your facility's EPA I.D. Number in Item I above.

A. FIRST APPLICATION *(place an "X" below and provide the appropriate date)*

☒ 1. EXISTING FACILITY *(See instructions for definition of "existing" facility. Complete item below.)*

☐ 2. NEW FACILITY *(Complete item below.)*

FOR EXISTING FACILITIES, PROVIDE THE DATE *(yr., mo., & day)* OPERATION BEGAN OR THE DATE CONSTRUCTION COMMENCED *(use the boxes to the left)*

YR.	MO.	DAY
8 0	1 0	1 0

FOR NEW FACILITIES, PROVIDE THE DATE *(yr., mo., & day)* OPERATION BEGAN OR IS EXPECTED TO BEGIN

YR.	MO.	DAY

B. REVISED APPLICATION *(place an "X" below and complete Item I above)*

☐ 1. FACILITY HAS INTERIM STATUS

☐ 2. FACILITY HAS A RCRA PERMIT

III. PROCESSES – CODES AND DESIGN CAPACITIES

A. PROCESS CODE – Enter the code from the list of process codes below that best describes each process to be used at the facility. Ten lines are provided for entering codes. If more lines are needed, enter the code(s) in the space provided. If a process will be used that is not included in the list of codes below, then describe the process *(including its design capacity)* in the space provided on the form *(Item III-C)*.

B. PROCESS DESIGN CAPACITY – For each code entered in column A enter the capacity of the process.

1. AMOUNT – Enter the amount.
2. UNIT OF MEASURE – For each amount entered in column B(1), enter the code from the list of unit measure codes below that describes the unit of measure used. Only the units of measure that are listed below should be used.

PROCESS	PROCESS CODE	APPROPRIATE UNITS OF MEASURE FOR PROCESS DESIGN CAPACITY
Storage:		
CONTAINER *(barrel, drum, etc.)*	S01	GALLONS OR LITERS
TANK	S02	GALLONS OR LITERS
WASTE PILE	S03	CUBIC YARDS OR CUBIC METERS
SURFACE IMPOUNDMENT	S04	GALLONS OR LITERS
Disposal:		
INJECTION WELL	D79	GALLONS OR LITERS
LANDFILL	D80	ACRE-FEET *(the volume that would cover one acre to a depth of one foot)* OR HECTARE-METER
LAND APPLICATION	D81	ACRES OR HECTARES
OCEAN DISPOSAL	D82	GALLONS PER DAY OR LITERS PER DAY
SURFACE IMPOUNDMENT	D83	GALLONS OR LITERS

PROCESS	PROCESS CODE	APPROPRIATE UNITS OF MEASURE FOR PROCESS DESIGN CAPACITY
Treatment:		
TANK	T01	GALLONS PER DAY OR LITERS PER DAY
SURFACE IMPOUNDMENT	T02	GALLONS PER DAY OR LITERS PER DAY
INCINERATOR	T03	TONS PER HOUR OR METRIC TONS PER HOUR; GALLONS PER HOUR OR LITERS PER HOUR
OTHER *(Use for physical, chemical, thermal or biological treatment processes not occurring in tanks, surface impoundments or incinerators. Describe the processes in the space provided; Item III-C.)*	T04	GALLONS PER DAY OR LITERS PER DAY

UNIT OF MEASURE	UNIT OF MEASURE CODE	UNIT OF MEASURE	UNIT OF MEASURE CODE	UNIT OF MEASURE	UNIT OF MEASURE CODE
GALLONS	G	LITERS PER DAY	V	ACRE-FEET	A
LITERS	L	TONS PER HOUR	D	HECTARE-METER	F
CUBIC YARDS	Y	METRIC TONS PER HOUR	W	ACRES	B
CUBIC METERS	C	GALLONS PER HOUR	E	HECTARES	Q
GALLONS PER DAY	U	LITERS PER HOUR	H		

EXAMPLE FOR COMPLETING ITEM III *(shown in line numbers X-1 and X-2 below)*: A facility has two storage tanks, one tank can hold 200 gallons and the other can hold 400 gallons. The facility also has an incinerator that can burn up to 20 gallons per hour.

C DUP 3 1

LINE NUMBER	A. PROCESS CODE (from list above)	B. PROCESS DESIGN CAPACITY 1. AMOUNT (specify)	B. 2. UNIT OF MEASURE (enter code)	FOR OFFICIAL USE ONLY	LINE NUMBER	A. PROCESS CODE (from list above)	B. PROCESS DESIGN CAPACITY 1. AMOUNT	B. 2. UNIT OF MEASURE (enter code)	FOR OFFICIAL USE ONLY
X-1	S 0 2	600	G		5				
X-2	T 0 3	20	E		6				
1	S 0 2	~~999999999~~ ~~1,000,000~~ 1,000,000.000	G		7				
2	T 0 1	~~300,000~~ 780,000	U		8				
3	T 0 1	216,000	U		9				
4	T 0 1	72,000	U		10				

L T 0 0 0 6 0 8 4 7 1	3	1	W	DUP	DUP

DESCRIPTION OF HAZARDOUS WASTES (continued)

A. EPA HAZARD. WASTE NO. (enter code)	B. ESTIMATED ANNUAL QUANTITY OF WASTE	C. UNIT OF MEASURE (enter code)	D. PROCESSES 1. PROCESS CODES (enter)				D. PROCESSES 2. PROCESS DESCRIPTION (if a code is not entered in D(1))
F 0 0 6	4165	T	T 0 1	D 8 0			
F 0 0 7	20825	T	T 0 1	D 8 0			
F 0 0 8	4165	T	T 0 1	D 8 0			
F 0 0 9	4165	T	T 0 1	D 8 0			
F 0 1 2	4165	T	T 0 1	D 8 0			
K 0 6 2	20825	T	T 0 1	D 8 0			
~~K 0 6 3~~	~~20825~~	~~T~~	~~T 0 1~~	~~D 8 0~~			
D 0 0 2	41650	T	T 0 1	D 8 0			
D 0 0 5	417	T	T 0 1	D 8 0			
D 0 0 6	417	T	T 0 1	D 8 0			
D 0 0 7	4165	T	T 0 1	D 8 0			
D 0 0 8	4165	T	T 0 1	D 8 0			
U 1 8 8	417	T	T 0 1	D 8 0			Received 10/5/81 P.J.

Form 3510-3 (6-80)

CONTINUE ON REVERSE

(enter "A", "B", "C", etc. behind the "3" to identify photocopied pages)

E. USE THIS SPACE TO LIST ADDITIONAL PROCESS CODES FROM ITEM D(1) ON PAGE

EPA I.D. NO. *(enter from page 1)*

													T/A	C
F	I	L	D	0	0	0	6	0	8	4	7	1	3	6

V. FACILITY DRAWING

All existing facilities must include in the space provided on page 5 a scale drawing of the facility *(see instructions for more detail).* FG : A/55

VI. PHOTOGRAPHS

All existing facilities must include photographs *(aerial or ground–level)* that clearly delineate all existing structures; existing storage, treatment and disposal areas; and sites of future storage, treatment or disposal areas *(see instructions for more detail).* FG: A/56

VII. FACILITY GEOGRAPHIC LOCATION

LATITUDE *(degrees, minutes & seconds)*	LONGITUDE *(degrees, minutes & seconds)*
41 40 44	0 87 34 46

VIII. FACILITY OWNER

☐ A. If the facility owner is also the facility operator as listed in Section VIII on Form 1, "General Information", place an "X" in the box to the left and skip to Section IX below.

B. If the facility owner is not the facility operator as listed in Section VIII on Form 1, complete the following items:

1. NAME OF FACILITY'S LEGAL OWNER	2. PHONE NO. *(area code & no.)*
Chem-Clear, Inc.	215-687-8990

3. STREET OR P.O. BOX	4. CITY OR TOWN	5. ST.	6. ZIP CODE
992 Old Eagle School Road	G Wayne	PA	19087

IX. OWNER CERTIFICATION

I certify under penalty of law that I have personally examined and am familiar with the information submitted in this and all attached documents, and that based on my inquiry of those individuals immediately responsible for obtaining the information, I believe that the submitted information is true, accurate, and complete. I am aware that there are significant penalties for submitting false information, including the possibility of fine and imprisonment.

A. NAME *(print or type)*	B. SIGNATURE	C. DATE SIGNED
Carl R. Cording, Exec. Vice Pres.	Carl R. Cording	11/5/80

X. OPERATOR CERTIFICATION

I certify under penalty of law that I have personally examined and am familiar with the information submitted in this and all attached documents, and that based on my inquiry of those individuals immediately responsible for obtaining the information, I believe that the submitted information is true, accurate, and complete. I am aware that there are significant penalties for submitting false information, including the possibility of fine and imprisonment.

A. NAME *(print or type)*	B. SIGNATURE	C. DATE SIGNED
Carl R. Cording, Exec. Vice Pres.	Carl R. Cording	11/5/80

 CONTINUE ON PAGE 5