State of Illinois
ENVIRONMENTAL PROTECTION AGENCY

Mary A. Gade, Director

2200 Churchill Road, Springfield, IL 62794-9276

217/524-3300

USEPA

US EPA RECORDS CENTER REGION 5
1000488

November 7, 1995

Mr. Paul A. Ahearn
Manager, Regulatory Compliance
Clean Harbors Environmental Services, Inc.
1200 Crown Colony Drive
P.O. Box 9137
Quincy, MA 02269-9137

Re: 0316000051 -- Cook County
Clean Harbors, Inc.
Log No. 16-TA-2, B-16-M-2
Administrative Record

Dear Mr. Ahearn:

The Agency has completed its review of the Construction Certification Report (CCR) for Unit 16 - Flammable Storage Tank Farm and Unit 25 - Container Management Building. The CCR for these units was dated July 25, 1995. Additional information submitted for this CCR was dated:

August 29, 1995	- List of changes to the drawings approved in the Permit;
September 12, 1995	- Response to verbal Agency comments made on 9-8-95;
September 13, 1995	- Sketch of the fume hoods in Buildings 25 and 26;
October 6, 1995	- As-built drawings of the fume hoods in Buildings 25 & 26;
October 19, 1995	- Response to Agency comments faxed to CHCI on 10-10-95;
October 23, 1995	- Photographs of the Tank Farm and Building 26;
November 2, 1995	- Description of the low pressure switch for T-250, (associated with the fire protection system);
November 3, 1995:	- Revised P.E. Certification for hydrostatic test of tanks.

The Agency inspected these units on September 12, 1995. Pursuant to the Agency's review and inspection, the Construction Certification Report for Unit 16 - Flammable Storage Tank Farm and Unit 25 - Container Management Building is approved subject to the following conditions:

1. The permittee shall not pump waste through Pumps 173, 176, or 188 until the permittee installs and tests these pumps and pipe connections to comply with the approved RCRA permit application. The permittee shall submit a Construction Certification Report as specified in Attachment C of the RCRA Permit and receive the Agency's approval of the Report prior to pumping waste through these pumps.

State of Illinois
ENVIRONMENTAL PROTECTION AGENCY

USEPA

Mary A. Gade, Director

2200 Churchill Road, Springfield, IL 62794-9276

217-524-3300

November 7, 1995

Mr. Paul A. Ahearn
Manager, Regulatory Compliance
Clean Harbors Environmental Services, Inc.
1200 Crown Colony Drive
P.O. Box 9137
Quincy, MA 02269-9137

Re: 0316000051 -- Cook County
Clean Harbors of Chicago, Inc.
Log No. 16-TA-2, B-16-M-2
Administrative Record

Dear Mr. Ahearn:

The Agency has completed its review of the Construction Certification Report for the Ignitable Container Management Building (Unit 26) dated September 9, 1995 and the additional information provided on the following dates:

October 6, 1995:	As-built drawings of the fume hood in Building 26,
October 23, 1995:	Response to Agency comments dated 10-17-95 that were faxed to CHCI on 10-20-95,
October 23, 1995:	Photographs of the labpack operations in Building 26 (included with the review notes for the Tank Farm - Unit 16 CCR),
November 1, 1995:	P.E. certification for the dry chemical fire extinguisher system installed above the labpack consolidation area in Building 26.

The Agency inspected this unit on September 12, 1995. The unit was not constructed in accordance with the approved plans because the ramps on the south wall of the building were not removed. This resulted in the ramps extending into the area that is used for container storage. As a result, the Agency has approved the unit subject to the following condition:

> The permittee shall not place containers of waste on the ramps inside Building 26. If the permittee modifies the existing ramps to comply with the approved RCRA permit application, they must submit a Construction Certification Report as specified in Attachment C of the RCRA Permit and receive the Agency's approval of the Report prior to placing containers of waste in this area.

USEPA

State of Illinois
ENVIRONMENTAL PROTECTION AGENCY

Mary A. Gade, Director

2200 Churchill Road, Springfield, IL 62794-9276

217-524-3300

May 30, 1995

Mr. Paul A. Ahearn
Manager, Regulatory Compliance
Clean Harbors Environmental Services, Inc.
1200 Crown Colony Drive
P.O. Box 9137
Quincy, MA 02269-9137

0316000051 -- Cook County
Clean Harbors, Inc.
Log No. 16-TA-1
Administrative Record

Dear Mr. Ahearn:

This letter is in response to your May 22, 1995 request for a time extension to the Temporary Authorization Log No. 16-TA-1 to construct eleven (11) units originally issued on November 22, 1995.

Pursuant to 35 Ill. Adm. Code 703.280(e)(4)(B), the Agency has reissued the temporary authorization to construct/modify seven container storage/staging areas, two unloading areas, a tank farm consisting of ten tanks and their ancillary equipment, and a fire suppression system at the CWM Chemical Services facility all as described in the original temporary authorization Log No.16-TA-1. Operation of these units is not authorized at this time. According to 35 Ill. Adm. Code 703.280(e)(4) this approval shall terminate 180 days from the date of this letter and cannot be extended.

If you have any questions regarding this letter, please feel free to call Rob Watson, P.E. at 217-524-3265.

Sincerely,

Edwin C. Bakowski, P.E.
Manager Permit Section,
Bureau of Land

ECB:WRW

cc: Matt Dunn, IAG
George Hamper, USEPA - Region V
Tony Martig, USEPA - Region V
Joseph McNally, Clean Harbors Inc.
John Connolly, CWM Chemical Services

Printed on Recycled Paper

State of Illinois
ENVIRONMENTAL PROTECTION AGENCY

Mary A. Gade, Director
2200 Churchill Road, Springfield, IL 62794-9276

USEPA
G. Hamper

December 23, 1994

Mr. Paul A. Ahearn
Manager, Regulatory Compliance
Clean Harbors Environmental Services, Inc.
1200 Crown Colony Drive
P.O. Box 9137
Quincy, MA 02269-9137

RECEIVED
JAN 01 1995
OFFICE OF RCRA
WASTE MANAGEMENT DIVISION
EPA, REGION V

0316000051 -- Cook County
Clean Harbors, Inc.
Log No. B-16-M-2
Administrative Record

Dear Mr. Ahearn:

The Agency has performed the completeness/technical review on the Sections G, H, I, J, K and O of Clean Harbors RCRA Part B Permit modification dated July 15, 1994. A copy of the comments on these Sections are attached to this letter. These comments are numbered sequentially to follow the Agency comments on Sections A through F of the application which were dated December 19, 1994. A response to the attached comments should be submitted with CHCI's responses to the earlier comments on Sections A through F by January 19, 1994. These comments need to be addressed in order for the Agency to issue a draft permit.

When the Agency receives CHCI's revised list of responses to the HAZOP recommendations, we will also provide comments on that submittal. Additional comments on the HAZOP may have an impact on the comments in this and the December 19, 1994 NODs which may need to be addressed in order for the Agency to issue a draft permit.

If you have any questions regarding this letter, please feel free to call Rob Watson, P.E. at 217-524-3265.

Sincerely,

Harry A. Chappel, P.E.
Hazardous Waste Branch Manager
Permit Section, Bureau of Land

HAC:WRW

ATTACHMENT

cc: Matt Dunn, IAG
George Hamper, USEPA, Region V
Tony Martig, USEPA, Region V
Joseph McNally, Clean Harbors
John Connolly, CWM

Notice of Deficiency
Clean Harbors RCRA Part B Permit modification
Log No. B-16-M-2

Section G

87. G-1: Drawing 4204B, Sheet 1 of 3 is missing from Appendix G-1.

88. G-1: The Plan should refer directly to the applicable information (eg. a Table of contact names) instead of referring to other Sections which in turn refer to the information. For example, Section G-1 refers to Section G-6 for a list of emergency response agencies. Section G-6 refers to Table G-3 for this information.

89. G-4: The plan should indicate if the EC uses the information in Appendices G-1, G-2, G-3, and G-4 to assess the hazards of a release, fire, or explosion.

90. G-4: The dates of the studies in Appendices G-2, G-3, and G-4 should be indicated.

91. G-4d(2), G-5: The facility is located very close to the Lake. The Drum Storage Building (#25) is less than 50 feet from the property line along the shore. The Contingency Plan needs to include procedures and equipment for managing a release of waste into Lake Calumet and/or coordinating with a response team that has surface water response capabilities.

92. G-5: This Section does not discuss how the PPE materials are appropriate for the types of wastes handled at the site. For example, Table G-2 includes PVC gloves and drawing 4221 lists rubber and cloth gloves. However, these materials (especially the cloth gloves), may not be protective for all of the different types of wastes/materials handled at the site.

93. G-5: All of the emergency equipment at the CWM site is not identified on Drawing 4221. Specifically, the equipment described in the Phase II Fire Protection System (eg. monitors, sprinklers and alarms) need to be identified and described in this Section of the plan. Due to the detail of the Phase II Fire Protection System, additional drawings may be needed to show the locations of this equipment. However, if possible, all emergency equipment should be identified on the same drawing.

94. G-6: This Section should include a table that summarizes the data in Appendix G-6. The plan should clearly identify which organizations agreed to enter into a coordination agreement and which ones refused. Also, the letters in Appendix G-6 are from 1991. Has the coordination between CHCI and any of these organizations changed since 1991?

95. G-7: Alternate evacuation routes are not provided on drawing 4220.

96. G-7: The plan does not identify the signal (eg. voice command over the PA system, or a continuous/intermittent horn) used to notify the employees to evacuate the site.

Section H

97. H-1b: The last page provided for Table H-1 (Page 4) indicates that the table is continued on another page.

Section I

98. I-1a: The closure plan only calls for decontamination of a unit until the rinsate from the decontamination process no longer exhibits a characteristic of a hazardous waste. This is not adequate to meet the closure performance standard of 35 IAC 724.211. Listed hazardous wastes were/are managed at the site and PCBs were received at the CWM site. Therefore, the closure cleanup standards must take into account PCBs and the hazardous constituents in the listed wastes that the site has received.

99. I-1d: This section indicates that water will be used to decontaminate the various areas. However, depending on the type(s) of waste managed in the unit/area, water may not be an appropriate solvent for decontamination. This section should be revised to indicate that an appropriate solvent will be used for the decontamination rinse.

100. I-3: The owner of the property was to submit a certification that documents that the requirements of 35 IAC 725.219(b) have been met (eg. notice in the deed that restricts the use of the old surface impoundments) by June 10, 1994. Therefore, this section of the application should be revised to include the required certifications and copies of the notice.

101. I-4: The unit costs in this section are from 1990. The costs should be updated to 1994 costs.

Section K

102. K-3: A prior conduct Certification was not provided. If this information is provided elsewhere in the application, Section K should reference the location.

TRIPLE G COATINGS INC.

Product Data

CENTRON 415 PIGMENTED

1714 Bannard Street
Riverton, NJ 08077
609/829-1576
FAX# 609/829-[illegible]

Description:

A two part, odorless, pigmented, epoxy novolac coating.

Features:

* Flexible, Resilient, Hard
* Outstanding Chemical Resistance
* Excellent Thermal, Impact and Abrasion Resistance
* Self-Leveling, Smooth, Glossy Cure
* Cures as low as 40°F in variable mil thickness up to 60 mils
* Self-Priming over Concrete and Steel
* Excellent Non Porous Barrier for Trenches, Ducts, Pipes, Tank Linings and Floors

Uses:

Monolithic Floor Coatings with optional Fiberglass Cloth or Non-Skid Media

* Anti-Corrosion Barrier Coating for Concrete Slabs, Masonry or Block Walls and Structural Steel, Beams or Equipment
* Outstanding Tank Lining for Concrete or Steel Tanks holding various liquid chemicals, solvents, potable water, grains, pelletized or slurry forms
* Restoration of existing surfaces, such as; plastics, polyester or other construction media suffering from attack, wear or thermal shock
* General corrosion protection in pulp and paper mils, industrial plants, food plants, marine industry, power plants, etc.

Product Credentials:

* Complies with F.D.A. Chapt. 121.2514 for use in Food Plants. Film is non-toxic when dry and fully cured.

Relevant Publications:

* Centron 415 M.S.D.S. Publication
* Centron 415 Spray Recommendation
* Centron 415 Floor Coatings

Physical Properties:

* Color: Centron Tan, Gray & Custom Colors
* Solids: 100% N.V.
* W.P.G.: 9.8 lbs. mixed
* Viscosity: 98 Ku, mixed
* Flash Point: Over 300°F
* Package: Two Package, Part A & Part B
* Container: Kits, 5 Gallon and Activator
  3 gallons Part B + 1 gallon Part A
  Total Mixed Kit, 4 Gallons

Storage and Handling:

Store inside a clean, dry room zoned for flammable products; temp. 50°F-90°F. Use ground clamps and avoid sparks or electrical discharge.

Shelf Life:

12 months from date of manufacture.

Solvents and Diluents:

* Thinning and Reduction: Use M.E.K.
* Clean Up: Use M.E.K.

Accessories: N/A

Basic System:

* General Service Floors
  Smooth Glossy
  First Coat: 5-8 mils
  Second Coat: 10 mils

* Textured, Slip Resistant
  First Coat: 10 mils
  Non-Skid: Silica Sand Blend
  Second Coat: 15 mils

REV: 11/86

TRIPLE G COATINGS INC. warrants that the Product shall conform to its standard specifications in effect at time of shipment. TRIPLE G COATINGS INC. MAKES NO OTHER WARRANTY, EXPRESS OR IMPLIED, WITH RESPECT TO THE PRODUCT AND DISCLAIMS THE IMPLIED WARRANTIES OF MERCHANTABILITY AND OF FITNESS FOR A PARTICULAR PURPOSE. Any liability of TRIPLE G COATINGS INC. arising out of the sale, use or application of its product shall be limited to replacement of the Product used.

These instructions are not intended to show product recommendations for specific service. They are issued as an aid in determining correct surface preparation, mixing instructions, and application procedure. It is assumed that the proper product recommendations have been made. These instructions should be followed closely to obtain the maximum service from the materials.

To the best of our knowledge the technical data contained herein are true and accurate at the date of issuance and are subject to change without prior notice. User must contact TRIPLE G COATINGS INC. to verify correctness before specifying or ordering. No guarantee of accuracy is given or implied. We guarantee our products to conform to TRIPLE G COATINGS INC. quality control. We assume no responsibility for coverage, performance or injuries resulting from use. Liability, if any, is limited to replacement of products. Prices and cost data if shown, are subject to change without prior notice. NO OTHER WARRANTY OR GUARANTEE OR ANY KIND IS MADE BY THE SELLER, EXPRESS OR IMPLIED, STATUTORY, BY OPERATION OR LAW, OR OTHERWISE, INCLUDING MERCHANTABILITY AND FITNESS FOR A PARTICULAR PURPOSE.

Preparation Method: Refer to individual job specification

* Steel: S.S.P.C. 1, 2, 3 and S.S.P.C. 6 - Commercial Sandblast to a 1.5 - 2 mil profile. Recommended S.S.P.C. - 10 for immersion.
* Concrete: Sandblast, vacuum blast, acid etch, degrease, detergent and/or solvent clean and dry. Prepared surface should equal medium sandpaper.
* Wood: Power sand, degrease, strip and remove all existing finish, stains and unsound wood.
* Basic: The surface must be structurally sound, clean, dry and free of intervening barriers to block or interfere with penetration and adhesion.
* Old Paint: Sand, degrease, clean and dry. Test apply and inspect for solvent attack, lifting and wrinkling.

Application Methods: Refer to individual job specification

* Brush: Natural fiber or solvent resistant synthetic.
* Roller: Short-medium nap roller, solvent resistant.
* Lambswool: Not Recommended.
* Spray: Air pressure or airless spray. Refer to publication.

Application Parameters:

* Environment: 40°F-100°F @ 90%-20% R.H.
* Coverage: 1,604 mil feet per gallon.
* Recommended Coverage: 160 sq. ft./gallon, per coat.
  10 mils wet and dry.
* Mix Ratio: 3:1 by volume. Pot Life: 60 minutes @ 77°F
* Induction Time: Not required. Mix well for 3 minutes.
* Dry Time: Laboratory determined @ 77°F and 50% R.H.
  Tack Free: 8-12 hours Nail Hard: 12-18 hours
  Hard: 24 hours Full Cure: 5 days.
* Repairs: Clean, degrease and sand rough to a texture of medium grit sandpaper. Solvent wipe clean, reapply.

Safety Precautions:

Centron 415 M.S.D.S. Data Sheet
Read Project Specifications

Waste Disposal:

Remove and dispose of in accordance with M.S.D.S. Data Sheet, and local, state and federal Environmental Protection Agency and Department of Environmental Protection Regulations.

Appearance and Acceptance:

The cured dry finish should be smooth, glossy and hard. Centron 415 should be well bonded with no bubbles, wrinkles or surface defects. Non-skid texture for floors creates a finish commensurate with size and type of media and thickness of finish coat.

CAUTION: CONTAINS FLAMMABLE SOLVENTS. KEEP AWAY FROM SPARKS AND OPEN FLAMES. IN CONFINED AREAS WORKMEN MUST WEAR FRESH AIRLINE RESPIRATORS. HYPERSENSITIVE PERSONS SHOULD WEAR GLOVES OR USE PROTECTIVE CREAM. ALL ELECTRIC EQUIPMENT AND INSTALLATIONS SHOULD BE MADE AND GROUNDED IN ACCORDANCE WITH THE NATIONAL ELECTRICAL CODE. IN AREAS WHERE EXPLOSION HAZARDS EXIST, WORKMEN SHOULD BE REQUIRED TO USE NON-FERROUS TOOLS AND TO WEAR

TECHNICAL AND PERFORMANCE DATA
CENTRON 415

Chemical Resistance

1. Exposure Media

Exposure Media	Term	Results
Sulfuric Acid 38%	9 Months	No Effect
Hydrocloric Acid 38%	9 Months	No Effect
Acetic Acid 10%	6 Months	No Effect
Caustic Soda 30%	9 Months	No Effect
Nitric Acid 10%	9 Months	No Effect
Skydrol (reg) 500B	9 Months	No Effect
Water, Deionized	9 Months	No Effect
Water, Salt 3%	9 Months	No Effect
Xylol	9 Months	No Effect
Ethanol	9 Months	No Effect
Unleaded Gasoline	9 Months	No Effect

2. Chemical Resistance, A.S.T.M. D-1308

Citric Acid 10%	No Effect
Sodium Hydroxide 10%	No Effect
Hydrochloric Acid 10%	No Effect
Sulfuric Acid 10%	No Effect
Petroleum Oils	No Effect
Acetic Acid 10%	No Effect
Ammonia 10%	No Effect
Sodium Chloride 10%	No Effect
Potassium Hydroxide 10%	No Effect
Calcium Hydroxide 10%	No Effect

3. Flexibility

Mandrel 1" Wrap	No Failure

4. Hot Immersion Tests

Test Media	Term	Results
H_2O @ 149°F	30 Days	No Defect
H_2SO_4 10% @ 149°F	15 Days	No Defect
HCl 10% @ 149°F	15 Days	No Defect
NaOH 10% @ 149°F	15 Days	No Defect
NaOH 25% @ 149°F	15 Days	No Defect

5. Tensile Properties

Cured Strength	PSI
Test @ 77°F	10,500
Test @ 200°F	8,000

Modulus of Elasticity	
Test @ 77°F	4.6×10^5
Test @ 200°F	3.4×10^5

TECHNICAL AND PERFORMANCE DATA - CENTRON 415 - (Continued)

6. Overcoat Adhesion

Test #1

Cured panel 10 days @ 77°F, dry, solvent wiped (MEK) and overcoated with CENTRON 415, no solvent reduction, cured 5 days.

Result: Excellent bond, adhesion. No separation under stress

Test #2

Cured panel 10 days @ 77°F, dry, brush blasted, solvent wiped (MEK) overcoated with CENTRON 415 and 15% solvent (MEK) reduction, cured 5 days.

Result: Excellent bond, adhesion, No separation under stress.

7. Temperature Limitations, Two Weeks

Dry Heat	300°F	No Change
Dry Heat	500°F	Color Change (Dark)
Wet, Steam and Condensate	250°F	No Change
Wet, Steam and Condensage	350°F	No Change

8. F.D.A. Status

Centron 415 resin and activator (curing agent) conforms to Federal Register Section 175.300, F.D.A. Supplemental data will be provided to comply and conform to listings in 21 CFR(b) (3) (VIII) which is cured epoxy coatings prepared from resins allowed in 21 CFR(b) (3) (VIII) and may be safely used as the food contact surface of articles intended for use in producing, manufacturing, packaging, processing, preparing, treating, holding or transporting food.

Centron 415 has limited classification when solvents are added to the mixed formula. Solvent reduction with Methyl Ethyl Ketone (MEK) permits cured film properties for intermittent contact with food in compliance with Chapter 121 of F.D.A. register. Solvents are not covered by F.D.A. and must be removed in the final cure by heating, baking, extended cure (10 days @ 77°F) and steam clean or detergent wash prior to use.

4312
1 part.

P.1 of 4

GE Silicones

One-Component RTV Adhesive Sealants

PRODUCT DESCRIPTION

RTV102, RTV103, RTV106, RTV108, RTV109, RTV112, RTV116 and RTV118 one-component, ready-to-use adhesive sealants are extremely versatile. They cure to a tough, durable, resilient silicone rubber on exposure to atmospheric moisture at room temperature. Acetic acid vapors are released from the sealant surface as a by-product of cure.

RTV102, RTV103, RTV108 and RTV109 sealants are standard strength paste consistency products which can be applied to vertical and overhead surfaces where pourable/self-leveling sealants are not practical.

RTV112 and RTV118 sealants are self-leveling products which are preferable to paste-consistency sealants when flow into small crevices and hard-to-reach places is desired.

RTV106 sealant is paste-consistency sealant; RTV116 sealant is a self-leveling sealant. Both RTV106 and RTV116 sealants are standard strength high-temperature sealants.

Since all these sealants utilize a moisture cure system, they must not be used in thicknesses of greater than 6mm (1/4 in.).

Where section depths exceed 6mm (1/4 in.), GE Silicones two-component silicone rubber compounds are recommended.

KEY PERFORMANCE PROPERTIES

- One-component products
- Capability to cure at room temperature and ambient humidity
- Self adhesion properties
- Low temperature flexibility
- High temperature performance
- Excellent weatherability and ozone and chemical resistance
- Excellent electrical insulation properties

APPLICATIONS

Product	Features	Potential Applications	UL	Food Contact
RTV102 White RTV103 Black RTV108 Translucent RTV109 Aluminum	General purpose pastes	General purpose bonding, sealing, electrical insulation, formed-in-place gaskets. Can be applied to vertical or overhead surfaces.	File 36952	FDA 21 CFR 177.2600 USDA NSF Std. No. 51
RTV106 Red	High temperature paste	Sealing heating elements, gasketing, electrical insulation, and other critical bonding and sealing applications where parts must perform at high temperatures. Can be applied to vertical or overhead surfaces.	File 36952	FDA 21 CFR 177.2600 USDA NSF Std. No. 51
RTV116 Red	High temperature self leveling	Thin section potting, filling small surface voids, protective coating, electrical insulation where high temperature performance is required.	File 36952	FDA 21 CFR 177.2600 USDA NSF Std. No. 51
RTV112 White RTV118 Translucent	General purpose self leveling	Electrical insulation, thin section potting, protective coatings. Will flow into small crevices and hard to reach places.	File 36952	FDA 21 CFR 177.2600 USDA NSF Std. No. 51

These sealants were not designed for and should not be used for applications intended for permanent implantation into the human body.

These sealants are not for use in delicate electrical and electronic applications in which corrosion of copper, brass or other sensitive metals is undesirable.

TYPICAL PRODUCT DATA

Uncured Properties	RTV102, RTV103 RTV108, RTV109	RTV106	RTV116	RTV112, RTV118
Consistency	Paste	Paste	Self leveling	Self leveling
Color	RTV102 White RTV103 Black RTV108 Translucent RTV109 Aluminum	Red	Red	RTV112 White RTV118 Translucent
Viscosity, poises	–	–	250	200
Application Rate, (g/min)	400	400	–	–
Specific Gravity	1.05	1.07	1.09	1.05
Tack-Free Time, min.	20	20	30	20

Cured Properties[1]	RTV102, RTV103 RTV108, RTV109	RTV106	RTV116	RTV112, RTV118
Mechanical:				
Tensile Strength, kg/cm² (lb/in²)	28 (400)	26 (375)	25 (350)	23 (325)
Elongation, %	450	400	350	325
Hardness, Shore A	30	30	20	25
Tear Strength, kg/cm (lb/in)	8 (45)	7 (40)	–	–
Shear Strength, kg/cm² (lb/in²)[2]	14 (200)	14 (200)	7 (125)	7 (100)
Peel Strength, kg/cm (lb/in)[3]	7 (40)	7 (40)	3 (25)	3 (15)
Electrical:				
Dielectric Strength, kv/mm (v/mil)	20 (500)	20 (500)	16 (400)	16 (400)
Dielectric Constant @ 60 Hz	2.8	2.8	2.8	2.8
Dissipation Factor @ 60 Hz	.001	.001	.001	.001
Volume Resistivity, ohm-cm	$3x10^{15}$	$3x10^{14}$	$2x10^{14}$	$6x10^{14}$
Thermal:[4]				
Brittle Point, °C (°F)	-60 (-75)	-60 (-75)	-60 (-75)	-60 (-75)
Maximum continuous operating temperature, °C (°F)	204 (400)	260 (500)	260 (500)	204 (400)
Maximum intermittent operating temperature, °C (°F)	260 (500)	315 (600)	315 (600)	260 (500)
Additional Information:[4]				
Linear Shrinkage, %	1.0	1.0	1.0	1.0
Thermal Conductivity, cal/sec/cm², °C/cm (Btu/hr/ft², °F/ft)	.0005 (.12)	.0005 (.12)	.0005 (.12)	.0005 (.12)
Coefficient of Expansion cm/cm, °C (in/in, °F)	$27x10^{-5}$ ($15x10^{-5}$)	$27x10^{-5}$ ($15x10^{-5}$)	$27x10^{-5}$ ($15x10^{-5}$)	$27x10^{-5}$ ($15x10^{-5}$)

[1] Cure time 3 days/25C (77F)/50% relative humidity.
[2] At 100% cohesive failure.
[3] At 100% cohesive failure using 1 in. x 8 in. stainless steel screen at 180° pull angle.
[4] Information is provided for customer convenience only. These properties are not tested on a routine basis.

SPECIFICATIONS

Typical property data values should not be used as specifications. Assistance and specifications are available by contacting GE Silicones.

INSTRUCTIONS FOR USE

Surface Preparation

RTV102, RTV103, RTV106, RTV108, RTV109, RTV112, RTV116 and RTV118 sealants will bond to many clean surfaces without the aid of primers. These surfaces typically include many metals, glass, ceramic, silicone rubber and some rigid plastics. These adhesive sealant products will also produce fair bonds to organic rubber and to some flexible plastics not containing fugitive plasticizers (which migrate to the surface, impairing adhesion). An evaluation should be made to determine bond strength for each specific application. For difficult-to-bond substrates, use of a primer is suggested. Primers SS4004, SS4044 and SS4179 are recommended for use with these sealants. (Complete information and usage instructions for these primer products are contained in a separate product data sheet, CDS1532).

Where adhesion is required, surfaces should be thoroughly cleaned with a suitable solvent such as naphtha or methyl ethyl ketone (MEK) to remove dirt, oil and grease. The surface should be wiped dry before applying the adhesive sealant.

When solvents are used, proper safety precautions must be observed.

Application and Cure Time Cycle

Paste-consistency products may be applied directly to clean or primed substrates. Where broad surfaces are to be mated, the sealant should be applied in a thin, less than 6mm (1/4 in.) diameter, bead or ribbon around the edge of the surface to be bonded.

Flowable products may be applied to clean or primed substrates by pouring directly from the original container or dipping. These products will self-level on a surface, filling small crevices and surface voids. Depth of potted sections should not exceed 6mm (1/4 in.).

The cure process begins with the formation of a skin on the exposed surface of the sealant and progresses inward through the material. At 25C (77F) and 50% relative humidity, RTV102, RTV103, RTV106, RTV108, RTV109, RTV112 and RTV116 sealants will form a surface skin which is tack-free to the touch in 15 to 30 minutes. Once the tack-free skin has begun to form, further tooling of the adhesive sealant is not advisable.

Higher temperatures and humidity will accelerate the cure process; low temperatures and low humidity will slow the cure rate.

As the adhesive sealant cures, acetic acid vapors are released from the sealant surface. The odor of acetic acid will completely disappear when curing is completed.

A 3mm (1/8 in.) section of adhesive sealant will cure through in approximately 24 hours at 25C (77F) and 50% R.H. Since cure time increases with thickness, use of these adhesive sealants should be limited to section thicknesses of 6mm (1/4 in.) or less.

Bond Strength Development

In addition to the effects of temperature and relative humidity, development of maximum bond strength will depend on joint configuration, degree of confinement, sealant thickness and substrate porosity. Normally, sufficient bond strength will develop in 12 to 24 hours to permit handling of parts. Minimum stress should be applied to the bonded joint until full adhesive strength is developed. Eventually the adhesive strength of the bond will exceed the cohesive strength of the silicone rubber sealant itself. Always allow maximum cure time available for best results.

PACKAGING AND DISPENSING

RTV adhesive sealants from GE Silicones are supplied ready-to-use in collapsible aluminum squeeze tubes, caulking cartridges and in bulk containers.

Collapsible aluminum tubes may be squeezed by hand or with the aid of mechanical wringers which allow more complete removal of material from the tube. Air-operated dispensing guns may also be used with aluminum tubes and offer the advantages of improved control and faster application for production line use. The sealant may be dispensed from caulking cartridges by using simple mechanical caulking guns or air-operated guns. Air-operated guns will allow greater control and application speed. Both tubes and cartridges are easy to use, can be put into production quickly and require minimal capital investment.

Note: Do not exceed 45 psig when used in air-powered caulking guns.

Bulk containers require a larger initial investment in dispensing equipment, but offer the most economical packaging for volume production. Bulk dispensing systems are air-operated extrusion pumps coupled to hand or automated dispensing units. Pumps which are specifically designed for pumping one-component RTV silicone rubber have TEFLON® seals, packings and lined hoses to prevent moisture permeation and pump cure problems. Specific details on dispensing systems and manufacturers are available in a separate GE Silicones RTV Silicone Rubber Equipment Guide (CDS1541).

CLEAN UP AND REMOVAL

Before curing, solvent systems such as naphtha or methyl ethyl ketone (MEK) are most effective. Refer to solvent use warnings in the section on surface preparation.

After cure, selected chemical strippers which will remove the silicone rubber are available from other manufacturers. Specific product information may be obtained on request.

FDA STATUS

RTV102, RTV103, RTV106, RTV108, RTV109, RTV112, RTV116 and RTV118 sealants can be used in food contact applications where FDA regulations apply. Reference CDS4319 "Food Contact Applications, Silicone Rubber Compounds", for specific regulations, limitations and conditions of use.

USDA STATUS

RTV102, RTV103, RTV106, RTV108, RTV109, RTV112, RTV116 and RTV118 sealants may be used on equipment which may contact edible products in official establishments operating under the Federal meat and poultry products inspection program. See USDA letter of Authorization.

NSF STATUS

The National Sanitation Foundation lists RTV102, RTV103, RTV106, RTV108, RTV109, RTV112, RTV116 and RTV118 sealants under NSF Standard No. 51 (Plastic Materials and Components for Use in Food Equipment), as satisfactory for use on food contact surfaces. Refer to GE bulletin CDS4319 before use.

UL STATUS

RTV102, RTV103, RTV106, RTV108, RTV109, RTV112, RTV116 and RTV118 silicone rubber adhesive sealants are recognized by Underwriters Laboratories, Inc., under their Component Recognition Program (UL File No. E-36952). Refer to CDS4320 for additional information.

MILITARY SPECIFICATION

MIL-A-46106B

Group I	Type I	General Purpose Paste RTV102, RTV103, RTV108, RTV109
	Type II	General Purpose Flowable RTV112, RTV118
Group III	Type I	High Temperature Paste RTV106
	Type II	High Temperature Flowable RTV116

Testing for referenced MIL Spec is performed in accordance with current GE Silicones quality test methods, laboratory conditions, and procedures, frequency and sampling, which are not necessarily identical with the methods, conditions, procedures, frequency and sampling stated or referenced in the listed specification. Any certification will be limited to listed properties and will not imply or state conformity to any other aspect of the referenced specification, including but not limited to marking, packaging, bar coding, testing, or sampling. Contact GE Silicones for a comparison review.

HANDLING AND SAFETY

These products are manufactured and sold for industrial use only.

Material Safety Data Sheets are available upon request from GE Silicones. Similar information for solvents and other chemicals used with our products should be obtained from your suppliers.

STORAGE WARRANTY PERIOD

When stored in the original unopened containers in a dry location at temperatures less than 27C (80F), RTV102, RTV103, RTV106, RTV108, RTV109, RTV112 and RTV116 sealants offer a storage life of up to one year from date of shipment from the manufacturer.

AVAILABILITY

GE Silicones rubber sealants may be ordered from GE Silicones, Waterford, NY 12188, the GE Silicones Sales office nearest you or an authorized GE silicone product distributor.

GOVERNMENT REQUIREMENT

Prior to considering use of a GE Silicones product in fulfilling any Government requirement, contact GE Silicones Government Programs Office.

LIMITED WARRANTY

GE Silicones warrants that its product will conform to GE Silicones' internal specifications at the time of application or use, provided that the product is stored in accordance with GE Silicones' recommendations and used or applied before the earliest of (1) the "Use Before Date" indicated on the product package, (2) one year from date of shipment, or (3) expiration of such other period or recommended storage time stated in the GE Silicones' literature for the product. If notified in writing of a claim within six months of the product's use or application, GE Silicones will, at its option, replace or refund the purchase price of any GE Silicones product which does not satisfy the foregoing warranty.

THE FOREGOING SHALL CONSTITUTE THE SOLE AND EXCLUSIVE REMEDY FOR DEFECTS OR FAILURE OF THE PRODUCT, AND THE SOLE AND EXCLUSIVE LIABILITY OF GE. THE WARRANTIES STATED ABOVE ARE IN LIEU OF ALL OTHER WARRANTIES, WRITTEN OR ORAL, STATUTORY, EXPRESS OR IMPLIED, INCLUDING ANY WARRANTY OF MERCHANTABILITY OR FITNESS FOR PURPOSE.

LIMITATION OF LIABILITY: GE shall, in no event, whether the claim is based on warranty, contract, tort, strict liability, negligence or otherwise, be liable for incidental or consequential damages, or for any other damages in excess of the amount of the purchase price.

NOTE: For many products, GE Silicones may be able to offer a more extensive, application specific warranty. For further information, contact your GE Silicones field representative.

GE Silicones

World Wide Offices

General Electric Company
[illegible] Hudson River Road
[illegible] Road, NY 12188
[illegible]: 800-255-8886

General Electric Canada, Inc.
2300 Meadowvale Blvd.
Mississauga, Ontario
Canada L5N 5P9
Phone: 800-668-4644/5

GE Plastics Pacific, Ltd.
GE Pacific PTE Ltd.
150 Beach Road
#24-00 Gateway West
Singapore, 0719
Phone: 65-291-8700

GE Silicones Korea
c/o Dongyang Silicones Co., Ltd.
Oriental Chem. Bldg.
58, Solong-Dong, Chung-Ku,
Seoul, Korea, 100-070
Phone: 82-2-774-2541

General Electric Plastics, B.V.
Plasticplein 1
P.O. Box 117
4600 AC Bergen op Zoom
The Netherlands
Phone: 31-1640-32291

GE Silicones
175 Hammond Road
Dandenong,
Victoria, 3175
Australia
Phone: 61-3-791-6777

General Electric Technical Service Co., Inc.
Taiwan Branch
7F, Formosa Plastics Building
201, Tun Hua North Road
Taipei, Taiwan
Phone: 886-2-514-9321

CDS4312 (10/92)

General Electric Company, U.S.A. is not connected with the English company of a similar name.
© Copyright 1992 General Electric Company

Printed on recycled paper.

State of Illinois
ENVIRONMENTAL PROTECTION AGENCY

USEPA
G. Hamper

Mary A. Gade, Director

2200 Churchill Road, Springfield, IL 62794-9276

December 19, 1994

Mr. Paul A. Ahearn
Manager, Regulatory Compliance
Clean Harbors Environmental Services, Inc.
1200 Crown Colony Drive
P.O. Box 9137
Quincy, MA 02269-9137

0316000051 -- Cook County
Clean Harbors, Inc.
Log No. 16-TA-1
Administrative Record

Dear Mr. Ahearn:

The Agency has performed the completeness/technical review on the Sections A, B, C, D and F of Clean Harbors RCRA Part B Permit modification dated July 15, 1994. A copy of the comments on these Sections are attached to this letter. A response to the attached comments should be submitted within 30 days of the date of this letter. Comments on the rest of the application will be sent under separate cover. These comments need to be addressed in order for the Agency to issue a draft permit.

It is our understanding that Clean Harbors will revise their list of responses to the HAZOP recommendations so that it identifies where each recommendation is addressed in the application. Once the Agency has reviewed this submittal we will provide comments on that document as well. These comments will need to be addressed in order for the Agency to issue a draft permit.

Other information may also be requested to clarify portions of the text in Sections A through F. Although this information may be critical for issuance of a final permit, we anticipate that it will not prevent us from issuing a draft permit.

Printed on Recycled Paper

If you have any questions regarding this letter, please feel free to call Rob Watson, P.E. at 217-524-3265.

Sincerely,

Harry A. Chappel, P.E.
Hazardous Waste Branch Manager
Permit Section, Bureau of Land

HAC:WRW

ATTACHMENT

cc: Matt Dunn, IAG
George Hamper, USEPA, Region V
Tony Martig, USEPA, Region V
Joseph McNally, Clean Harbors
John Connolly, CWM

Notice of Deficiency
Clean Harbors RCRA Part B Permit modification
Log No. B-16-M-2

General

1. All drawings, technical specifications and narratives provided after the July 15, 1994 submittal (eg. for the TA) must be incorporated into the RCRA Part B permit application. For example, the narrative must be revised to reference the revised/additional drawings and engineering certifications.

2. The format of the application was to be such that units which are "proposed/modified" would be identified separately from "existing" units. The application does not follow this format. Therefore, the application should be revised to incorporate this format.

Part A

3. CHCI should submit an addendum to the Part A which lists the hazardous waste codes that CHI will <u>not</u> accept at the site.

Section B

4. B-1a(3)(a), B-1a(3)(b), and B-1a(3)(g) through B-1a(3)(j): The descriptions of the units in these sections are not specific enough to determine if they are at CHCI or CWM, or to differentiate between multiple units. The description of each unit should include a reference number on a CHCI drawing as it does in B-1a(3)(c).

5. B-1a(3)(d): This Section states that there will not be any changes to the previously approved stabilization activities. However, CHCI Drawing 4204B Sheet 2 of 3 indicates new stabilization activities will take place in CWM building #39. This Section or DWG. 4204B should be revised so that the description of proposed stabilization activities are consistently described.

6. Map Requirements: All loading/unloading areas need to be clearly identified in the narrative and on the drawings. Are wastes unloaded into the 4 receiving tanks (sumps #1-4) at the CHCI site? If they are, this area needs to be designated as an unloading area.

7. Map Requirements: Table B-1 should include Fire Control Facilities.

8. Map Requirements: The drawings used to describe drainage and run-off should also identify the surfaces at the site (ie. concrete, asphalt, gravel, and grass).

9. B-2b: The point of compliance and post-closure monitoring wells for the closed surface impoundments must be shown on the referenced Drawing No. 4202.

10. B-3(c): Section 21.1 of the Act does not appear to apply solely to NEW disposal facilities, therefore, CHCI needs to address the requirements for this checklist item.

11. B-4a: The narrative on traffic management refers to DWG 4249 sheets 1 to 3. However, DWG. 4249 only contains 2 sheets.

12. B-4a: DWG. 4249 should be revised to show the traffic patterns going to or from the drum shed (Bldg. 25), the fuels blending operation or roll-off pad (Bldg. 43 and 60), the south entrance of the drum handling building (Bldg. 26), or the stabilization operation (Bldg. 39).

13. B-4a: This section states that rail shipments will be in box or gondola cars, or tankers. If CHCI plans to handle wastes in rail cars other than tankers, Sections D, F and DWG. 4217 must include drawings and descriptions of the procedures and equipment use for transferring wastes to/from the rail cars. This equipment must be compatible with the wastes and meet the secondary containment requirements for ancillary equipment.

14. B-4a: This section must address the roadway system at the CWM portion of the site.

Section D

15. D-1(i): The application provides a numerical list of 31 drawings of the container storage units at the site. This list should be broken up. The drawings which relate to each tank farm should be listed separately.

16. Section D-1(i)(C)(2), Container Storage Building #26: DWG. 4210, sheet 2 of 3 must be revised to consistently identify the number of containers CHCI proposes to store in this building:

    - DWG. 4210, sheet 2 of 3 indicates 180 drums;

    - A count of the drums shows a total of 186 drums; and

    - NOTE #1 states that maximum capacity is 196 drums.

17. Section D-1(i)(C)(3): Container loading/unloading dock: The number of containers to be stored/staged in this area is not consistently identified in the application. Page D-7 states that it is sized for 176 drums, but DWG. 4245 and the cover letter indicate that 160 drums will be stored/staged in this unit. The application must be revised to consistently describe the number of containers in each regulated unit.

18. D-1(iii) The descriptions of the Hazardous Waste Transporter Storage/Staging units listed in Section D-1(iii) are not adequate. They must be revised for the following reasons:

    a. The units listed under this Section are containers management units. Therefore, they need to be addressed as a container management units throughout the application. They are not. For example, the management of wastes in the rail car unloading unit is not addressed in Section D-1a(2), Container Management Practices.

    b. The application does not clearly describe where all of the transportation storage/staging areas are located.

    c. The application does not clearly describe the arrangement of the trucks in the transportation storage/staging areas. The arrangement of trucks should be indicated on the drawings of the units.

    d. Page D-10 states that 27 transportation vehicles can be parked in these areas. The number of vehicles on pages D-10 to D-13 indicate that 30 vehicles are proposed for these areas.

19. Section D-1(v), RCRA Exempt Container Management Activities: The application must identify the areas at the site that CHCI proposes to use as a transfer facility. This information is not included on facility drawings.

20. D-1a(2): The procedures used to transfer waste to and from containers at the site must be more clearly described. For example:

    a. The locations of these activities are not clearly described. Section D-1a(2) and Appendix D-2 both indicate that liquid bulking operations will occur in the staging areas. DWG. 4210 sheet 2 of 3 shows two transfer pumps for drum pumping located in the container storage building #26. However, this building is not designated as a staging area.

    b. The equipment used for these activities is not completely described. Other than the two pumps, the equipment (eg. hoses, piping, ventilation, and safety equipment) used to transfer wastes at the pump station in building #26 is not described in the application.

21. Section D-1a(2) needs to describe the methods used to transport containers of waste around the facility.

22. Section D-1a(3): This Section of the application should identify where CHCI proposes to store incompatible wastes. For example, if CHCI proposes to store incompatible wastes in adjacent storage bays, this should be discussed in the application.

23. D-1a(3), F-5d: The application should discuss the receipt of incompatible wastes at the proposed container dock. The container unloading dock only has one secondary containment system. Therefore, incompatible wastes may not be managed (eg. unloaded) in this area at the same time.

24. D-1a(3)(a): The soil bearing data in the referenced Appendix D-9 is only for the CHCI property. Soils data for the CWM site should also be provided in this Appendix.

25. D-1a(3)(a), Building #25: This Section states that the floor will be segregated using angle iron and caulking system. These changes should be identified on the drawings (x-section, and plan) of this area, or the narrative should be revised. It has been the Agency's experience that these systems are difficult to maintain. CHCI should investigate alternative designs such as concrete berms, or the use of gaskets between the angle iron and floor.

26. D-1a(3)(e): This Section must discuss the methods used to determine the regulatory classification(s) of the wastes collected in the secondary containment systems. For example, the way in which these materials will be addressed in the WAP must be described.

27. D-1a(3)(e): This Section must describe how wastes collected in the secondary containment systems are removed in a timely fashion.

28. Section D-2(iv) is not provided.

29. D-2(i): The application provides a numerical list of 25 drawings of the RCRA regulated tank systems at the site. This list should be broken up. The drawings which relate to each tank farm should be listed separately.

30. D-2(i): The heading of this section should be revised to indicate that it pertains only to RCRA regulated tank systems. Page D-32 states that there are not any existing tank systems, but CHCI DWGs. 4205, 4206 and 4214 are labeled existing operations. Both Page D-32 and the titles of the drawings need to be revised. The reader must go to page D-39 to learn that the existing tanks are covered under the CWA and therefore RCRA-exempt.

31. D-2(i): Page D-34 states that "detailed process descriptions for these tank operations are provided in Appendix D-1." The descriptions provided in this appendix are very vague, and the units discussed in are not clearly identified. In particular, Section 2.3 is titled "Bulking Operations - Tank Farm and Rail cars." However, it only states that bulking will take place in several unspecified areas and says that the wastes will be compatible. For example,

    "There is also a truck bulking area in the container storage area in which trucks can be loaded from a storage tank or from containers." and

"All materials will be tested for prior to pumping using the "bucket test" or equivalent procedure described in the facility's Waste Analysis Plan."

The application must be revised to provide a more detailed description of these operations which includes the locations of these areas, how the materials will be bulked, and the equivalent procedure which will determine if they are compatible.

32. Appendix D-1, page D-13: Attachments 2 and 3 referenced on this page are not provided in this Appendix.

33. D-2b(1), Tank Assessment: Simply certifying that CHCI agrees with the 1990 tank farm assessment is not adequate. This assessment was not approved by the Agency. A number of concerns about the assessment need to be addressed by CHCI. These include: the types of wastes considered during the assessment versus the types of wastes CHCI intends to store in the tanks, the inspection of the tanks, the certification of the inspections, and that the assessment did not include tanks T-101 through T-104 (item No. 3., Conclusions, page 14).

34. In order to address these concerns, CHCI will need to include a detailed description of how the tanks will be inspected prior being place into service, the characteristics of the wastes CHCI proposes to place in the tanks such as sp.gr. and corrosivity (not just pH), and how the WAP will insure that these characteristics will not be exceeded. In short, an assessment of the CWM tank system's integrity is required before CHCI can place waste in these tanks

35. D-2b(2): The type of external corrosion protection (plastic covered insulation jackets) described in the application is not consistent with the current type of protection for the tanks at the CWM site (stainless steel coverings over insulation). The application must include an accurate description of the units. If CHCI intends to change the type of corrosion protection on the tank farm, this activity must be included in Section D-2b(3).

36. D-2c: This Section refers to Table D-5 for the dimensions and capacities of the tanks. This Section and Table D-5 should both clearly identify the tanks that are in each tank farm.

37. D-2c: The capacities of the tanks in the Ignitable Liquid Storage Tank Farm must be consistently described. The current descriptions of the tanks are not consistent:

    - Page B-10, D-36 & Table D-5:
      9 tanks at 12,800 gallons
      1 tank at 19,800 gallons

    - Drawing 4215, and the secondary containment calculations:
      9 tanks at 12,000 gallons
      1 tank at 20,000 gallons

    - Table D-2 in Appendix D-2:
      9 tanks at 11,025 gallons
      1 tank at 19,880 gallons

38. D-2c: Detailed engineering drawings of the tanks such as those in Appendix D-14 should be provided for the tanks in the Ignitable Bulk Liquid Tank Farm.

39. D-2c: The minimum shell thicknesses (both design and existing) of the tanks are not provided. The application needs to identify the following for each tank: the design codes, the minimum shell thickness (top, bottom and side), the corrosion allowance, and the shell thickness (top, bottom and side) measured during the last annual inspection.

40. D-2d: The description of the feed system, safety cutoff, bypass, and pressure controls is very vague. At a minimum, the following information about these systems needs to be provided:

    a. This Section needs to provide a general description of how the tank system will be operated. Is it operated from the control room? How do the operators in the control room communicate with the workers in the field? Is the feed system fully automated, if so, what information from the tanks does this system rely on? How reliable is this information?

    b. The system's materials of construction and their compatibility to the wastes must be described.

c. Page D-48 indicates that the tank farm has manual feed and cutoff systems. However, Table D-6 indicates that the safety cutoff system is "manual/automatic" and DWG. 4207 sheet 4 of 4 shows air actuated valves (eg. an automatic feed system). The application must clearly describe:

- what part is manual and what part is automatic,
- how the system operates,
- the type(s) of level sensors, and
- where the alarm sounds. Is the alarm in the control room or outside where the workers can hear it?
- The procedures followed when an overflow alarm is sounded.

d. There is no description of any bypass system. The application needs to describe the consequences and the procedures followed if excess waste is pumped into a tank.

e. There is no description of the pressure controls. The application needs to describe how pressure is controlled in the tanks and piping, and what happens if the acceptable pressure is exceeded.

f. DWG. 4207 sheet 4 of 4 shows a low pressure alarm. Each tank should also have a high pressure alarm.

g. Page D-49 states that the drawings show temperature indicators and controllers. There are no temperature indicators and controllers shown on DWG. 4207. However, the CHCI response to R99 in the HAZOP states that temperature indicators will be installed on the discharge side of each pump.

h. The location of ancillary equipment in and around the tank farm is not provided. Page D-52, location of ancillary equipment in the CWM tank farm: refers to DWG. 4215 sheet 3 of 3. There if only one page of DWG. 4215, it is a P&ID.

58. F-2b(2)(c), Table F-1: The devises used to monitor the liquid levels in the tanks need to be identified individually in the table. In particular, the level indicators, sensors and alarms for the tank farm all need to be in the table. This is necessary to insure that all the parts of the system that measure and report the level, as well as the alarms are regularly inspected.

59. F-2b(2)(d): Table D-6 indicates that the tanks in the new tank farm are operated at above atmospheric pressure (2 in. of water), and several others are operated below ambient temperature. However, Section F-2b(2)(d) only discusses liquid level monitors in the tanks. Therefore, this Section should be revised to discuss pressure monitors as well.

60. F-3a(2), External Communications: CWM indicated that there were have been times when the telephone system has been out of service at the site. Therefore, the application should include a backup system for external communications (eg. a cellular phone) at the site in case of emergency.

61. F-3a(2), External Communications: CHCI drawings 4221 sheet 2 of 3 and 3 of 3 must show the locations of the P/A speakers at the CWM portion of the site.

62. F-3a(3), Emergency Equipment: A spill control station needs to be located either on, or immediately adjacent to, the container unloading dock (#62).

63. F-3a(3), Emergency Equipment: The various components in the fire suppression system at the CWM site (eg. monitors, sprinkler heads, etc.) need to be shown with the other emergency equipment on Drawing 4221. For example, the components in the foam system should be described in the narrative and identified on the drawings independent from those in the water system.

64. F-3a(4), Water for Fire Control: The Certification of the Foam Fire Protection System Upgrade is missing from Appendix F-4.

65. F-3a(4), Water for Fire Control: The narrative on the top of page F-10 does not follow page F-9A. A corrected page F-9A needs to be provided.

66. F-4a, Unloading Operations: The areas/units listed in Table F-3 need to be identified by the ID numbers for each area/unit on the referenced drawings.

67. F-4a, Unloading Operations: Table F-3 indicates that drums will be loaded/unloaded from trucks at the rail car unloading area. The application should be revised to remove this proposal because this area is not designed for receipt/loading of drums.

68. F-4a, Unloading Operations: Table F-3 indicates that drums will be crushed & compacted north of Bldg. #43 under the canopy. Drawings of the equipment used for this activity need to be included in the application. The referenced drawing 4212 does not show any equipment for conducting this activity.

69. F-4a, Unloading Operations: Table F-3 refers to Appendix F-9 for secondary containment calculations. Appendix F-6 appears to be the correct reference.

70. F-4a, Unloading Operations: Either Appendix F-6 or Drawing 4217 need to be revised. The design of the rail car unloading area used for secondary containment calculations in Appendix F-6 does not appear to be consistent with DWG. 4217.

71. F-4a, Unloading Operations: Appendix F-6 should be revised so that the units/areas in this Appendix are clearly cross-referenced to the other drawings in the application. For example, which unit in Table F-3 corresponds to the Flammable Bulk Storage Pad/Tanker Loading Pad (Item 6 of 15), or the Proposed Truck Loading Dock (Item 7 of 15) in Appendix F-6? Also, it does not appear that all of the proposed units/areas at the CWM site are included in this Appendix.

72. F-4a, Unloading Operations: The application (Sections D, F and drawing #4217 referenced in Table F-3) needs to include drawings and descriptions of the equipment use to transfer wastes to/from the rail cars. This equipment must be compatible with the wastes and meet the secondary containment requirements.

73. F-4a, Unloading Operations: The description of the loading/unloading procedures for rail cars in Appendix D-2 must include procedures for the transfer of wastes to the tank farm.

74. F-4b, Run-off: The Section does not discuss the run-off from the outside hazardous waste management areas. For example, this section should discuss the timing of the inspections of these areas during precipitation events to insure that they do not overflow. It should also discuss the timely removal of collected precipitation from the secondary containment systems or reference the Section of the application that discusses this issue.

75. F-4e: The PPE Matrix (Table F-4) should identify the minimum level of protection (eg. Level A, B, C, or D) required for each operation listed in the Table.

76. F-5a: This Section does not discuss the use of nonsparking tools when handling ignitable wastes at the site.

77. F-5: The description of the precautions used in handling ignitable or reactive wastes is not adequate. This section of the application must include (or reference) the following information, at a minimum:

    a. The special precautions for the handling of reactive wastes.

    b. This Section of the application must identify the types of ignitable or reactive wastes which CHCI intends to treat and the reasons that they are considered reactive or ignitable (eg. if they release HCl, H_2S, or ignitable gas, or if they are considered air or water reactive).

    c. A description of any special tools or equipment used to sample the wastes.

    d. Detailed descriptions of the equipment used in the treatment of these waste as well as scale drawings and P&IDs of the equipment.

78. F-5c: The section refers to drawing 4204 for the location of units relative to the property line. Reference to this drawing alone is not adequate. This Section must identify the specific units/areas in which ignitable or reactive wastes will be stored, treated, or otherwise managed.

79. F-5d: This Section of the application should indicate if incompatible wastes will be stored/staged in adjacent storage bays. If CHCI proposes to store incompatible wastes in this manner, the storage bays must be designed/operated to prevent containers from falling into the adjacent bay.

80. F-5d: This Section should be titled Management of Incompatible Wastes in Containers.

81. F-5d: As the container unloading dock only has a single secondary containment system. Incompatible wastes cannot be handled (eg. unloaded) in the area at the same time.

82. F-5e: This Section needs to repeat or specifically refer to the stringent QA/QC procedures mentioned earlier in the application for the treatment of ignitable or reactive wastes in tanks.

83. F-5e: This Section needs to include a more detailed description of how the wastes are managed to comply with the requirements of 35 IAC 703.202(f) and 724.298. For example, this Section should identify which tanks are used to treat or pretreat reactive wastes, and how those wastes are made nonreactive (eg. the operating conditions of the tanks during treatment and pretreatment).

84. F-5f: This Section needs to include a more detailed description of how the wastes are managed to comply with the requirements of 35 IAC 703.202(j) and 724.299. For example, this Section should identify which tanks are used to pretreat incompatible wastes, how the wastes are pretreated, the operating conditions of the tanks during pretreatment, and where the wastes are stored prior to treatment.

85. F-5f: This Section needs to clearly identify if CHCI proposes to manage two or more wastes that are incompatible in the same tank system at the same time. The Agency is concerned that human or mechanical errors such as leaving the wrong valves partially open or closed, or the presence of incompatible wastes/residues in pipes, manifolds or pumps could result in the mixing of incompatible wastes and the release of hazardous constituents to the environment. Therefore, CHCI must have equipment and procedures in place that prevent such occurrences during normal operations at the site. Safety precautions may include color coded manifolds, piping and connectors, dedicated piping, and other safety precautions.

86. F-5f: It is not sufficient to wash down solely the vessels which held incompatible wastes. Potentially incompatible residue must also be removed from the ancillary equipment.

CleanHarbors
OF CHICAGO, INC.
11800 SOUTH STONY ISLAND AVENUE • CHICAGO, IL 60617
(312) 646-6202 • FAX (312) 646-6381

Certified Mail #Z781265337

December 14, 1994

Mr. Mark Schollenberger, P.E.
Environmental Protection Engineer
Illinois Environmental Protection Agency
Division of Land Pollution Control
2200 Churchill Road
P.O. Box 19276
Springfield, IL 62794-9276

Dear Mr. Schollenberger:

Clean Harbors of Chicago, Inc. ("Clean Harbors") is submitting a permit application for additional generic permits as a modification of Permit 1983-80-SP. The additional generics would cover wastewaters treated in the inorganic listed wastewater treatment system. These generics have slight modifications from generic permits the facility previously received for listed hazardous wastewaters. IEPA removed those generics when the facility decided to self-delist and receive only non-listed wastewaters. Clean Harbors intends to treat the listed hazardous wastewaters in the same manner they were treated previously, but in a new segregated system.

For each generic the hazardous waste codes, waste source, major waste components, preacceptance analysis, prereceiving analysis, and treatment methods are listed. Clean Harbors is submitting these as eight separate generic permits, but would prefer a single generic covering the inorganic listed wastewater treatment system with these waste codes.

Enclosed is the General Application for Permit (LPC-PA1).

Notifications to Elected Officials and Concerned Citizens have been sent. A copy of the notification (LPC-PA16) is enclosed.

If you have any further questions, please contact me at (312)646-6202.

Sincerely,

James R. Laubsted
Facility Compliance Manager

DEC 19 1994

Wastes from Electroplating Operations

Hazardous Waste Codes: F006, F007, F008, F009, D002, D003, D004, D005, D006, D007, D008, D009, D010, D011

Waste Source: Plating Baths, spent solutions containing heavy metals, treatment residues, contaminated solutions

Major Waste Components (concentration limitations):

Water	100%
Arsenic	10,000 ppm
Barium	10,000 ppm
Cadmium	10,000 ppm
Chromium	250,000 ppm
Copper	150,000 ppm
Iron	200,000 ppm
Lead	150,000 ppm
Mercury	1 ppm
Nickel	150,000 ppm
Selenium	10,000 ppm
Silver	10,000 ppm
Zinc	180,000 ppm
Cyanide	150,000 ppm

Preacceptance Analysis: pH, metals analysis (total, TCLP if above regulatory level),(Arsenic, barium, cadmium, chromium, copper, iron, lead, mercury, nickel, selenium, silver, and zinc), reactivity, compatibility, reactive cyanide, reactive sulfide, phenol, flashpoint, total solids, COD, Total Organic Carbon, acidity/alkalinity, color, appearance, odor, specific gravity, treatability,

Prereceiving Analysis: pH, metals analysis (Cadmium, chromium, copper, iron, lead, nickel, zinc), reactivity, compatibility, reactive cyanide, reactive sulfide, phenol, ignitibility, solids, neutralization, color, appearance, odor, treatability

Treatment Methods: Metal precipitation, hexavalent chromium reduction, cyanide oxidation, neutralization, dewatering

TCLP or the IEPA certification are required for hazardous waste codes D004-D043 for each waste stream.

Wastes from Metal Heat Treating Operations

Hazardous Waste Codes: F010, F011, F012, D002, D003, D004, D005, D006, D007, D008, D009, D010, D011

Waste Source: Quenching wastewaters, spent cyanide solutions containing heavy metals, treatment residues, contaminated solutions

Major Waste Components (concentration limitations):

Water	100%
Arsenic	10,000 ppm
Barium	10,000 ppm
Cadmium	10,000 ppm
Chromium	250,000 ppm
Copper	150,000 ppm
Iron	200,000 ppm
Lead	150,000 ppm
Mercury	1 ppm
Nickel	150,000 ppm
Selenium	10,000 ppm
Silver	10,000 ppm
Zinc	180,000 ppm
Cyanide	150,000 ppm

Preacceptance Analysis: pH, metals analysis (total, TCLP if above regulatory level),(Arsenic, barium, cadmium, chromium, copper, iron, lead, mercury, nickel, selenium, silver, and zinc), reactivity, compatibility, reactive cyanide, reactive sulfide, phenol, flashpoint, total solids, COD, Total Organic Carbon, acidity/alkalinity, color, appearance, odor, specific gravity, treatability,

Prereceiving Analysis: pH, metals analysis (Cadmium, chromium, copper, iron, lead, nickel, zinc), reactivity, compatibility, reactive cyanide, reactive sulfide, phenol, ignitibility, solids, neutralization, color, appearance, odor, treatability

Treatment Methods: Metal precipitation, hexavalent chromium reduction, cyanide oxidation, neutralization, dewatering

TCLP or the IEPA certification are required for hazardous waste codes D004-D043 for each waste stream.

Wastes from the Chemical Conversion Coating of Aluminum

Hazardous Waste Codes: F019, D002, D003, D004, D005, D006, D007, D008, D009, D010, D011

Waste Source: Aluminum surface coating and etching, spent solutions containing heavy metals, treatment residues, contaminated solutions.

Major Waste Components (concentration limitations):

Water	100%
Aluminum	10,000 ppm
Arsenic	10,000 ppm
Barium	10,000 ppm
Cadmium	10,000 ppm
Chromium	250,000 ppm
Copper	150,000 ppm
Iron	200,000 ppm
Lead	150,000 ppm
Mercury	1 ppm
Nickel	150,000 ppm
Selenium	10,000 ppm
Silver	10,000 ppm
Zinc	180,000 ppm
Cyanide	150,000 ppm

Preacceptance Analysis: pH, metals analysis (total, TCLP if above regulatory level),(Arsenic, barium, cadmium, chromium, copper, iron, lead, mercury, nickel, selenium, silver, and zinc), reactivity, compatibility, reactive cyanide, reactive sulfide, phenol, flashpoint, total solids, COD, Total Organic Carbon, acidity/alkalinity, color, appearance, odor, specific gravity, treatability

Prereceiving Analysis: pH, metals analysis (Cadmium, chromium, copper, iron, lead, nickel, zinc), reactivity, compatibility, reactive cyanide, reactive sulfide, phenol, ignitibility, solids, neutralization, color, appearance, odor, treatability

Treatment Methods: Metal precipitation, hexavalent chromium reduction, cyanide oxidation, neutralization, dewatering

TCLP or the IEPA certification are required for hazardous waste codes D004-D043 for each waste stream.

Wastes from Inorganic Pigment Production

Hazardous Waste Codes: K002, K003, K004, K005, K006, K007, K008, D002, D004, D005, D006, D007, D008, D009, D010, D011

Waste Source: Wastewaters and sludges from the production of chrome yellow, chrome orange, molybdate orange, zinc yellow, chrome green, chrome oxide green, and iron blue pigments, treatment residues, contaminated solutions.

Major Waste Components (concentration limitations):

Water	100%
Arsenic	10,000 ppm
Barium	10,000 ppm
Cadmium	10,000 ppm
Chromium	250,000 ppm
Copper	150,000 ppm
Iron	200,000 ppm
Lead	150,000 ppm
Mercury	1 ppm
Nickel	150,000 ppm
Selenium	10,000 ppm
Silver	10,000 ppm
Zinc	180,000 ppm

Preacceptance Analysis: pH, metals analysis (total, TCLP if above regulatory level),(Arsenic, barium, cadmium, chromium, copper, iron, lead, mercury, nickel, selenium, silver, and zinc), reactivity, compatibility, reactive cyanide, reactive sulfide, phenol, flashpoint, total solids, COD, Total Organic Carbon, acidity/alkalinity, color, appearance, odor, specific gravity, treatability

Prereceiving Analysis: pH, metals analysis (Cadmium, chromium, copper, iron, lead, nickel, zinc), reactivity, compatibility, reactive cyanide, reactive sulfide, phenol, ignitibility, solids, neutralization, color, appearance, odor, treatability

Treatment Methods: Metal precipitation, hexavalent chromium reduction, cyanide oxidation, neutralization, dewatering

TCLP or the IEPA certification are required for hazardous waste codes D004-D043 for each waste stream.

Wastes from Coking Operations

Hazardous Waste Codes: K060, K087, D002, D004, D005, D006, D007, D008, D009, D010, D011

Waste Source: Ammonia still lime sludge, decanter tank sludge, wastewaters from coking operations, treatment residues, contaminated solutions.

Major Waste Components (concentration limitations):

Water	100%
Arsenic	10,000 ppm
Barium	10,000 ppm
Cadmium	10,000 ppm
Chromium	250,000 ppm
Copper	150,000 ppm
Iron	200,000 ppm
Lead	150,000 ppm
Mercury	1 ppm
Nickel	150,000 ppm
Selenium	10,000 ppm
Silver	10,000 ppm
Zinc	180,000 ppm
Phenol	50,000 ppm

Preacceptance Analysis: pH, metals analysis (total, TCLP if above regulatory level),(Arsenic, barium, cadmium, chromium, copper, iron, lead, mercury, nickel, selenium, silver, and zinc), reactivity, compatibility, reactive cyanide, reactive sulfide, phenol, flashpoint, total solids, COD, Total Organic Carbon, acidity/alkalinity, color, appearance, odor, specific gravity, treatability

Prereceiving Analysis: pH, metals analysis (Cadmium, chromium, copper, iron, lead, nickel, zinc), reactivity, compatibility, reactive cyanide, reactive sulfide, phenol, ignitibility, solids, neutralization, color, appearance, odor, treatability

Treatment Methods: Metal precipitation, hexavalent chromium reduction, chemical oxidation, neutralization, dewatering

TCLP or the IEPA certification are required for hazardous waste codes D004-D043 for each waste stream.

Wastes from Ink Formulation

Hazardous Waste Codes: K086, D002, D004, D005, D006, D007, D008, D009, D010, D011

Waste Source: Caustic or water washes and sludges from cleaning tubs and equipment used in the formulation of ink from pigments, driers, soaps, and stabilizers containing chromium and lead, treatment residues, contaminated solutions.

Major Waste Components (concentration limitations):

Water	100%
Arsenic	10,000 ppm
Barium	10,000 ppm
Cadmium	10,000 ppm
Chromium	250,000 ppm
Copper	150,000 ppm
Iron	200,000 ppm
Lead	150,000 ppm
Mercury	1 ppm
Nickel	150,000 ppm
Selenium	10,000 ppm
Silver	10,000 ppm
Zinc	180,000 ppm

Preacceptance Analysis: pH, metals analysis (total, TCLP if above regulatory level),(Arsenic, barium, cadmium, chromium, copper, iron, lead, mercury, nickel, selenium, silver, and zinc), reactivity, compatibility, reactive cyanide, reactive sulfide, phenol, flashpoint, total solids, COD, Total Organic Carbon, acidity/alkalinity, color, appearance, odor, specific gravity, treatability

Prereceiving Analysis: pH, metals analysis (Cadmium, chromium, copper, iron, lead, nickel, zinc), reactivity, compatibility, reactive cyanide, reactive sulfide, phenol, ignitibility, solids, neutralization, color, appearance, odor, treatability

Treatment Methods: Metal precipitation, hexavalent chromium reduction, neutralization, dewatering

TCLP or the IEPA certification are required for hazardous waste codes D004-D043 for each waste stream.

Wastes from Metal Production

Hazardous Waste Codes: K061, K064, K065, K066, K069, K090, K091, K100, D002, D004, D005, D006, D007, D008, D009, D010, D011

Waste Source: Emission control sludges and dusts, blowdown slurries, impoundment solids, process waters from metal production, treatment residues, contaminated solutions.

Major Waste Components (concentration limitations):

Water	100%
Arsenic	10,000 ppm
Barium	10,000 ppm
Cadmium	10,000 ppm
Chromium	250,000 ppm
Copper	150,000 ppm
Iron	200,000 ppm
Lead	150,000 ppm
Mercury	1 ppm
Nickel	150,000 ppm
Selenium	10,000 ppm
Silver	10,000 ppm
Zinc	180,000 ppm

Preacceptance Analysis: pH, metals analysis (total, TCLP if above regulatory level),(Arsenic, barium, cadmium, chromium, copper, iron, lead, mercury, nickel, selenium, silver, and zinc), reactivity, compatibility, reactive cyanide, reactive sulfide, phenol, flashpoint, total solids, COD, Total Organic Carbon, acidity/alkalinity, color, appearance, odor, specific gravity, treatability

Prereceiving Analysis: pH, metals analysis (Cadmium, chromium, copper, iron, lead, nickel, zinc), reactivity, compatibility, reactive cyanide, reactive sulfide, phenol, ignitibility, solids, neutralization, color, appearance, odor, treatability

Treatment Methods: Metal precipitation, hexavalent chromium reduction, cyanide oxidation, neutralization, dewatering

TCLP or the IEPA certification are required for hazardous waste codes D004-D043 for each waste stream.

Nonhazardous Wastewaters Which Produce Listed Hazardous Residues Upon Treatment

Hazardous Waste Codes: None

Waste Source: Wastewaters from electroplating operations, metal heat treating operations, chemical conversion coating of aluminum, inorganic pigment manufacturing, primary zinc production, spill clean-ups, contaminated solutions

Major Waste Components (concentration limitations):

Water	100%
Arsenic	5 ppm TCLP
Barium	100 ppm TCLP
Cadmium	1 ppm TCLP
Chromium	5 ppm TCLP
Copper	150,000 ppm
Iron	200,000 ppm
Lead	5 ppm TCLP
Mercury	0.2 ppm TCLP
Nickel	150,000 ppm
Selenium	1 ppm TCLP
Silver	5 ppm TCLP
Zinc	180,000 ppm
Phenol	50,000 ppm
Cyanide	250 ppm

Preacceptance Analysis: pH, metals analysis (total, TCLP if above regulatory level),(Arsenic, barium, cadmium, chromium, copper, iron, lead, mercury, nickel, selenium, silver, and zinc), reactivity, compatibility, reactive cyanide, reactive sulfide, phenol, flashpoint, total solids, COD, Total Organic Carbon, acidity/alkalinity, color, appearance, odor, specific gravity, treatability,

Prereceiving Analysis: pH, metals analysis (Cadmium, chromium, copper, iron, lead, nickel, zinc), reactivity, compatibility, reactive cyanide, reactive sulfide, phenol, ignitibility, solids, neutralization, color, appearance, odor, treatability

Treatment Methods: Metal precipitation, hexavalent chromium reduction, chemical oxidation, neutralization, dewatering

TCLP or the IEPA certification are required for hazardous waste codes D004-D043 for each waste stream.

Illinois Environmental Protection Agency · P.O. Box 19276, Springfield, IL 62794-9276

General Application for Permit (LPC-PA1)

This form must be used for any application for permit from the Division of Land Pollution Control, except for waste stream permits and permits for the composting of landscape waste only. Attach any necessary plans, specifications, reports, etc. to fully support and describe the activities or modifications being proposed. If necessary, attach sufficient information to demonstrate compliance with all applicable RCRA requirements.

SITE IDENTIFICATION

Name: Clean Harbors of Chicago, Inc. Site # (IEPA): 0 3 1 6 0 0 0 0 5 1

City: Chicago County: Cook

Existing DE/OP Permit Nos. (if applicable): 1980-36-OP

	OWNER	OPERATOR
Name:	Clean Harbors of Chicago, Inc.	Clean Harbors of Chicago, Inc.
Address:	11800 S. Stony Island Ave.	11800 S. Stony Island Ave.
	Chicago, IL 60617	Chicago, IL 60617
Contact Name:	James R. Laubsted	James R. Laubsted
Phone #:	(312) 646-6202	(312) 646-6202

TYPE SUBMISSION:		TYPE FACILITY:		TYPE WASTE:	
Developmental		Landfill		General Municipal Refuse	
Operating	X	Land Treatment		Hazardous	X
Supplemental	X	Transfer Station		Special (Non-Hazardous)	X
Permit Transfer		Treatment	X	Demo Debris (ex. putrescible)	
Name Change		Storage	X	Demo Debris (incl. putrescible)	
Closure/Post Closure Certification		Incinerator		Used Oil	
		Composting		Solvents	
		Recycling/Reclamation		Landscape/Yard Waste	
		Other		Other (Specify)	

DESCRIPTION OF PROJECT: (Include a brief narrative description here.)
Addition of eight generic authorizations to supplemental permit 1983-80-SP for the inorganic listed wastewater treatment system.

COMPLETENESS REQUIREMENTS

The following items must be submitted unless they are either not required, or have previously been approved. Any items marked "N/A" must be fully explained. For example, a treatment facility may indicate "N/A" for prior conduct certification and explain that certification is not required for treatment facilities. Please refer to the instructions for further guidance.

1. Have all public notice letters been mailed and is documentation enclosed? X Yes ___ No ___ N/A

RECEIVED
DEC 19 1994
IEPA - DLC
PERMIT SECTION

This Agency is authorized to require this information under IL Rev. Stat., 1979, Chapter 111 1/2 Section 1039. Disclosure of this information is required and failure to do so may prevent this form from being processed and could result in your application being denied. This form has been approved by the Forms Management Center.

IL 532 1857
LPC 350 01/90

State of Illinois
ENVIRONMENTAL PROTECTION AGENCY

Mary A. Gade, Director

2200 Churchill Road, Springfield, IL 62794-9276

NOTICE OF APPLICATION FOR PERMIT TO MANAGE WASTE (LPC-PA16)

Date: December 14, 1994

To Elected Officials and Concerned Citizens:

The purpose of this notice is to inform you that a permit application has been submitted to the IEPA, Bureau of Land, for a solid waste project described below. You are not obligated to respond to this notice, however, if you have any comments, please submit them in writing to the address below, or call the Permit Section at 217/524-3300, within twenty-one (21) days.

Illinois Environmental Protection AGency
Bureau of Land, Permit Section (#33)
2200 Churchill Road, Post Office Box 19276
Springfield, Illinois 62794-9276

The permit application, which is identified below, is for a project described at the bottom of this page.

SITE IDENTIFICATION

Site Name: Clean Harbors of Chicago, Inc. Site # (IEPA): 0316000051

Address: 11800 S. Stony Island Ave.

City: Chicago County: Cook

TYPE PERMIT SUBMISSION:		TYPE FACILITY:		TYPE WASTE:	
New Landfill		Landfill		General Municipal Refuse	
Landfill Expansion		Land Treatment		Hazardous	
First Significant Modification		Transfer Station	X	Special (Non-Hazardous)	X
Significant Modification to Operate		Treatment Facility	X	Chemical Only (exc. putrescible)	X
Other Significant Modification		Storage	X	Inert Only (exc. chem. & putrescible)	
Renewal of Landfill		Incinerator		Used Oil	
Development		Composting		Solvents	
Operating		Recycling/Reclamation		Landscape/Yard Waste	
Supplemental		Other		Other (Specify)	
Transfer					
Name Change					
Waste Stream					
Generic	X				

DESCRIPTION OF PROJECT: (For multiple waste stream applications, see reverse side).

Generic authorizations for the inorganic listed wastewater treatment system. See other side for wastestream identification.

DEC 19 1994

PERMIT SECTION

IL 532 0334
LPC 040 Rev. Aug-93

Printed on Recycled Paper

LIST OF ELECTED OFFICALS AND CONCERNED CITIZENS

1. The Honorable Patrick O'Malley
   Room 118, Capitol Building
   Springfield, IL 62706

2. The Honorable Maureen Murphy
   4931 West 95th Street
   Oaklawn, IL 60453

3. Mr. Richard J. Phelan
   County Building
   118 North Clark Street, Room 434
   Chicago, IL 60602

4. Mr. John M. O'Malley
   County Building
   118 North Clark Street, Room 434
   Chicago, IL 60602

5. Dr. Cecil Lue-Hing, D.SC., P.E.
   Director, Research & Development
   METROPOLITAN WATER RECLAMATION
   DISTRICT OF GREATER CHICAGO
   100 East Erie Street
   Chicago, IL 60611

6. Village of Burnham Clerk
   14450 Meanes Road
   Burnham, IL 60633

7. Ms. Marceline Phalen
   Village of Riverdale Clerk
   325 West 142nd Street
   Riverdale, IL 60627

8. Ms. Michelle Freyman
   Calumet City Clerk
   P.O. Box 1519
   Calumet City, IL 60627

9. Ms. Geraldine Galvin
   Calumet Park Clerk
   12409 South Throop Street
   Calumet Park, IL 60643

cc: Maynard USEPA

JHK WRW

6-11-2

CleanHarbors®
OF CHICAGO, INC.
11800 SOUTH STONY ISLAND AVENUE • CHICAGO, IL 60617
(312) 646-6202 • FAX (312) 646-6381

Certified Mail - Return Receipt Requested - #P873791856

October 7, 1994

RECEIVED
OCT 11 1994
IEPA - BOL
PERMIT SECTION

Illinois Environmental Protection Agency
Division of land Pollution Control #24
Planning and Reporting Section
2200 Churchill Road
Post Office Box 19276
Springfield, IL 62794-9276

Dear Sir:

Enclosed is documentation submitted as a requirement of the Clean Harbors of Chicago, Inc. RCRA Part B Permit (RCRA Log No. 16, 0316000051). This is required by Attachment D, Part E, Number 2(c) on page D-5.

This project consists of:

(a) providing an impervious surface coating to the existing concrete slab, the curbs and the walls that are used as part of the containment for the outside container storage area unloading dock. The surface coating is compatible with the waste, or any liquid, stored in the containment system; and will prevent migration of the waste into the concrete slab or wall.

(b) installing a compatible caulking or sealant at each existing joint in the secondary containment system of the above area to make the joint liquid tight. These joints include but are not limited to, all construction joints within the slab, walls and curbs and joints between the slab and curb, two curbs, between the slab or curb and wall and joints between two walls. The caulking or sealant shall be compatible with the stored waste, or any liquid, stored in the same containment system with the hazardous waste.

The surface coating was applied to the existing secondary containment of the unloading dock on September 10th and 11th, 1994. The caulking/sealant was installed September 12th.

RECEIVED
OCT 11 1994
IEPA - BOL
PERMIT SECTION

CleanHarbors®

A Certification by an Illinois Registered Professional Engineer is enclosed along with technical literature describing the surface coating and caulking/sealant. Please note the concrete secondary containment was existing and approved in the Part B Permit.

If you have any further questions, please contact me at (312)646-6202.

Sincerely,

James R. Laubsted
Facility Compliance Manager

CERTIFICATION

This statement is to be completed by both the responsible officer and the registered professional engineer upon completion of construction in accordance with 35 IAC Section 702.126. Submit one copy of the certification with original signatures and two additional copies (four additional copies for UIC wells). Forward these certification statements and any information required by the permit to the following address:

Illinois Environmental Protection Agency
Division of Land Pollution Control - #24
Permit Section
2200 Churchill Road
P.O. Box 19276
Springfield, Illinois 62794-9276

FACILITY NAME: Clean Harbors of Chicago, Inc.

IEPA SITE CODE: 0 3 1 6 0 0 0 0 5 1

U.S. EPA ID NO.: IL D 0 0 0 6 0 8 4 7 1

PART B PERMIT LOG #/UIC PERMIT #: 16

PERMIT (OR MODIFICATION) ISSUANCE DATE: September 30, 1993

PERMIT CONDITION NO. REQUIRING CERTIFICATION: Attachment D, E.2.

The **** has been constructed in accordance with the specifications in the Part B/UIC Permit. Documentation that the construction was in accordance with the permit is contained in the enclosed report. I certify under penalty of law that this document and all attachments were prepared under my direction or supervision in accordance with a system designed to assure that qualified personnel properly gather and evaluate the information submitted. Based on my inquiry of the person or persons who manage the system, or those persons directly responsible for gathering the information, the information submitted is, to the best of my knowledge and belief, true, accurate, and complete. I am aware that there are significant penalties for submitting false information, including the possibility of fine and imprisonment for knowing violations.

Signature of Owner/Operator

Joseph L. McNally Vice President/General Manager
Name and Title

Signature of Registered P.E.

Bhuphendra Patel, 062-048690
Name of Registered P.E. and Illinois Registration Number

October 6, 1994
Date

(P.E. SEAL)

BC:dks/3924j, 27

**** Impervious coating and joint sealants for secondary containment of drum unloading area.

RECEIVED
OCT 11 1994
PERMIT SECTION

Summary of RCRA Part B Denial Issues

RECEIVED
APR 2 2 1994
PERMIT SECTION

CONTAINER STORAGE/STAGING

1. Sampling area (existing) and unloading/staging area (proposed)
   A. Asphalt is unacceptable. Need to be concrete, curbed, sealed
   B. Stormwater collection system not a substitute for containment
   C. Asphalt/sewers would lead to a release to the environment

   CWM: Sampling to be conducted in a building: "Primarily" in Drum Storage Building (DSB - Unit 41), but also in the Drum Shed (DS - Unit 25) and Drum Handling Building (DHB - Unit 26). The proposed Drum Dock will be poured concrete, curbed, and sealed. No roof required?

2. Aisle space inadequate/double rows of pallets not allowed
   CWM: Minimum 2-foot aisle space in all storage units

3. Incompatible Wastes
   A. 4 feet of separation not a substitute for a physical barrier (e.g., a curb)
   B. Need specific procedure to prevent mixing of incompatibles; containers should not be stacked unless a barrier to prevent tipping or a device to prevent spillage into adjacent bay

   CWM:
   A. Per Interim Consent Decree (ICD), a 4-foot aisle space from pallet to curb is required to prevent incompatible reaction from tipping/oversplash
   B. Use modified compatibility test prior to mixing

4. Inadequate description of container types
   CWM: Description provided

5. Closure of outdoor container storage areas
   A. Each area must be closed separately
   B. Sewer system was used for containment and must be closed if no Part B is issued to run it

   CWM: Closure issues to be addressed under separate cover. See "Interim Status Closure Plan for Outdoor Storage Areas"

6. Use of outdoor storage area prohibited
   Does not apply to proposed CHI operations

7. Drum Sampling Area (DSA)
   Application insufficiently described DSA

   CWM: DSA will not be used or be part of the full Part B facility. Instead, a 6-inch curb (with all manholes sealed) until DSB is built. All sampling to be conducted inside the DSB.

RECEIVED
APR 2 2 1994
PERMIT SECTION

8. Ash Pad
   A. Location discrepancies (also: refers to a transfer dock)
   B. Secondary containment minimum 10% unless WAP changed to "no free liquids"
   C. How many units/arrangement?
   D. Standard operating procedures (SOP's) for use of the pad. IEPA questioned the use of fork trucks.

   CWM: Made appropriate changes; referred to 1/31/90 response

9. Drainage controls
   A-D: Insufficient details on how outdoor areas drain

   CWM: General clarification

10. Additional staging areas along north side of processing area
   IEPA seeks clarification on additional staging area

   CWM: Interim area with 6-inch curb and containment booms; area used used for site generated wastes

11. Container Transfer Dock
   Inconsistent references as to location. Must be concrete lined with sump.

   CWM: Revisions made to incorporate comments.

12. Vehicle/ Rail Management
   A. Application said 50 vehicles: where parked?
   B. Tractors with incompatible waste should not be parked next to each other or in a common containment system
   C. Runoff concerns for staging areas
   D. Must specify a schedule (how long sampled, staged, loaded/rejected)

   CWM:
   A. Reduced number to 20: tank truck = 2, drum dock = 3, tank truck stage = 8, box truck stage = 7
   B. Trucks (bulk and drummed liquids) will be compatibility tested if parked in same area. Separate bays will be provided as necessary for incompatible wastes.
   C. Truck staging areas shall have secondary containment (no minimum volume specified)
   D. For schedule, see 1/31/91 response and ICD A-14.

13. Drum repackaging in DHB
Unacceptable to IEPA because:
A. Need air pollution control system for vapors or "other emissions"
B. No precautions to prevent uncontrolled reactions, fumes, dust, etc.
C. No procedures for incompatibles

CWM: DHB to have slight negative pressure; all exhaust to the incinerator or through activated carbon

14. All waste must be staged/sampled in (proposed) DSB
What happens if it is full?

CWM: Reject load

15. Container Stacking
A. Must meet NFPA 30 code (aisle space, pile size, etc.)
B. Must meet NFPA 30 code (stack height for IB, IC, & II liquids)

CWM: Will meet NFPA

16. What type of sealants:
CWM: Epoxy norplac or polyurethane or equivalent resin.

17. Shredder building floor not sloped in text, but sloped in drawing
CWM: Corrected the text; floor slopes to a blind sump

18. All container storage, sampling, and staging areas must be sealed
CWM: Acknowledged

TANKS

19. Corrosion allowance for filter and strainer residue tank needed
CWM: Ample thickness available - see Alpha report

20. Entire surface of tank farm must be coated
CWM: Agreed to epoxy based system

21. Need drawing with all ancillary equipment
CWM: Provided

22. Flanges and shut off devices must be inside containment
CWM: Revised drawings

23. Need a procedure for manually gauging tanks to present overfill
CWM: Provided. Visual through manway. Tape measure with a holder maximum fillage is 1 foot from top.

24. High and High-High must sound at unloading area and at control room
CWM: Agreed

TANK TRUCK AND RAIL CAR UNLOADING

25. Secondary Containment Volumes
A. Tank truck dock: IEPA say 9210 gal; only enough for one (1) 5,000 gallon truck
B. Rail car: CWM used incorrect dimensions
C. Rail Car: Rail & tanker = 22,000 gallons; not enough for one (1) rail car (23,000 gallons) -- thus, does not secondary containment and is not permissible. Also, potential incompatibility issue becuase tanker/rail barrier not separated

CWM:
A. Tank truck: recalculated = 11,662 gallons
B. Rail: redesigned/recalculated = 25,723 gallon
C. Basins separated to eliminate incompatibles. Rail car and trucks subject to compatibility

26. Rail car area drawings must show that run-on is prevented, or else run-on must be accounted for in secondary containment calculations.
CWM: Run-on will be prevented (see Drawing No. D.2-22)

TANK PID's

28. All tanks should have automatic waste feed cutoff interlocks
CWM: All do (nomenclature problem)

29. Figure D.2-22B not provided
CWM: Typographical error

30. Waste liquids must have separate manifold and pipe lines fuel oil/auxiliary fuel feed tanks T109 and T110
CWM: Changes made

31. Incinerator - Does not apply to proposed CHI operations.

32. A new tank used for sludge storage include Class I liquids
CWM: By City of Chicago design standards, CWMCS is not allowed to store Class I liquids in tanks

33. Drawing details/cross-sections missing
CWM: Revisions made

34. Drawing details: valves, couplings, special feed line
CWM: Explanations provided

35. Specifications for ancillary equipment for T99 and T100
CWM: Stainless piping will be provided

36. Inadequate information
   A. Type of pumps
   B. Type of valves/couplings, materials of construction, compatibility
   C. Liquid level sensors
   D. Striker plates at bottom of tanks
   E. Is nitrogen blanket an NFPA approved system?
   F. Waste feed rate tank directs it at the hatch

   CWM: Revisions made:
   A. List provided
   B. Carbon steel or stainless valves: all couplings are stainless
   C. Sonic sensors for level and "high" alarm. Floats for "high-high"
   D. Independent corrosion expert said striker plates not required
   E. Nitrogen blanket meets NFPA-69 standard
   F. Arrangement changed

EXISTING TANKS

37. Tank assessment inadequate because
   A. No detailed structural analysis of the structural supports in the foundation of the east side of the tank farm
   B. Shell thickness of T102-T104. Are not designed to a specific code standard
   C. Did not document that ancillary equipment has appropriate strength to handle expected stresses

   CWM: Submitted Alpha report in January, 1990
   A. An independent PE determined that tank design is adequate
   B. All tank thickness were determined; used ultra sonic testing
   C. See Alpha report

38. Characteristics of Waste in Tanks
   A. Text indicates possibility of Class I liquids
   B. Waste characteristics/variability not accounted for; all tanks should have some type of liner installed as a protect against corrosion

   CWM:
   A. Only Class II and III liquids to be placed in tanks
   B. Hazardous characteristics were discussed in Alpha report. Tanks include mild steel and stainless. Materials corrosive to mild steel (e.g. acetone and chlorinated solvents) will be put into stainless

39. Corrosion Protection/Assessment: External surface between insulation and tank not assessed)
   CWM: Assessment found them to be adequate

40. Tank ages/useful life data
CWM: Provided

41. Tank test not adequate
CWM: The Alpha report addressed key issues
Hydrostatic test superseded by visual internal inspection

NEW TANKS

42. Tank assessment must include T-99, T100 and T901 (new tanks)
CWM: Provided in Alpha report

43. Tank T-101 design details missing
CWM: See Alpha report

44/45. Installation of T101-T104
Pre-use inspection reports and tightness tests not included (i.e., no independent PE inspection/certification)

CWM:
Tank standards went into effect 7/14/86 (Federal) and 8/4/87 (Illinois)
Tanks T101-T104 were installed before the regulations became effective in Illinois
CWM proposed to use 1990 tank assessment instead

46. Type/degree of corrosion protection not documented
CWM: See Alpha report

INCINERATION:

47-62. Does not apply to proposed CHI activities

PREPAREDNESS AND PREVENTION:

63. Emergency stack standby power generator
Does not apply

64. Inspections must include rail
CWM: Incorporated

65. Inspection Plan includes a reference to nitrogen blanketing for shredder. Will nitrogen or CO_2 system be used?

CWM: Nitrogen blanket system will not be used (CO_2 instead).
Reference to nitorgen deleted

66. Safety equipment map deficiencies
CWM: Corrected

67. Kiln off-loading ramp
Does not apply to proposed CHI activities

68. Use of treated stormwater in scrubber system
Does not apply to proposed CHI activities

69. IEPA requires a drawing describing stormwater collection system and drainage of entire site.
CWM: See Figure B.2-4 - 1/31/90 report

CONTINGENCY PLAN

70. Logic plan (notification procedures) deficiencies
CWM: Acknowledged/revised

71. Water generated during emergencies may not be conveyed through sewer system (it could have cracks and allow for a release)
CWM: All process areas contained. Only stormwater enters the system.

72. Emergency equipment map deficiencies
CWM: Acknowledged/revised

73. Arrangements with local authorities not provided
CWM: To be provided upon revision of Contingency Plan

74. Typographical error
CWM: Acknowledged/revised

75. Physical barriers needed to segregate incompatibles generated during an emergency (4 ft. separation not enough)
CWM: Will have segregated bays and waste analysis plan procedures to identify wastes

76. 24-hour notice of non-compliance issue is required
CWM: Acknowledged/incorporated

77. Changes made by CWM which were not in response to an IEPA comment
A. "Appropriate PPE" not specific enough
B. Decontamination procedures were deleted from text
C. "Will" (notify) changed to "may" (notify)

CWM:
A. PPE specified
B. Procedures moved to different section, not deleted
C. Rely on notification decision logic statement

78. Tank containment and control
   A. Waste feed cutoff (to incinerator) due to a leak
   B. Spilled waste must be removed within 24 hours
   C. Must remove visibly contaminated soil
   D. Must notify IEPA within 24 hours if release to environment
   E. Incident reporting deficiencies
   F. Provisions for repair/closure not included
   G. Certification of major repairs not included

   CWM:
   A. Does not apply to proposed CHI activities
   B. Acknowledged/revised
   C. Acknowledged/revised
   D. Acknowledged/revised
   E. Acknowledged/revised
   F. Acknowledged/revised
   G. Acknowledged/revised

79. Procedures for managing a release into Lake Calumet
   CWM: Discussion/provisions included in text

80. Criteria for sounding an alarm not included
   CWM: Revisions made

81. Monitoring system for shredder CO_2 and exhaust fan interlocks missing
   CWM: Revisions made

WASTE ANALYSIS PLAN

82. Test requirements for dioxin
   Does not apply to CHI proposed activities

83. Non-hazardous waste subject to WAP
   CWM: Acknowledged/revised

84. <u>WAP Test Requirements</u>
- Generator profile must be based on analytical data (except "special waste")
- Preacceptance and incoming must include ignitable, corrosive, reactive information

A. Incompatible precautions not included; need liquid incompatibility test for drum decant and repackaging
B. Incompatible testing prior to storage
C. Test for flash and boiling point to assign NFPA Class designation (i.e., I - III) for stacking
D. No ignitable/reactive drums in shredder. How confirmed?

CWM:
- Testing or knowledge is allowed by regulations
- Mandatory analysis expanded to include ten (10) screening tests, including gas chromatograph scan

A. Developed liquid compatibility test store/mix
B. pH during prequalification and acceptance
C. "Flammable Potential Scan" - if positive, assume Class I
D. Screening parameters added

85. <u>Composite samples of waste from different generators not allowed</u>
CWM: Procedures changed

86. <u>Compatibility program must include EPA 600/2-80-076 procedures</u>
CWM: Developed own program based on EPA reference

87. <u>Tank blending limited to liquids with SG of 1.5</u>
CWM: The 1.5 limit on the tank already takes the safety factor into account. The SG will be limited 1.5

<u>CLOSURE PLAN</u>

88. <u>Inconsistencies in drawings</u>
CWM: Revisions completed

89. <u>Closure costs must be worst case (i.e. all RCRA waste in metal drums) and third party figures</u>
CWM: Acknowledged/revised

90. <u>Incinerator cannot be assumed to be in working order. All wastes must go offsite</u>
CWM: Acknowledged/revised

91. <u>RCRA decontamination procedures</u> (i.e., closure performance standard)
   A. Procedures must be for RCRA waste too, not just PCB's
   B. Visual inspections required to document removal of residuals
   C. Stipulations on removal of pipes/pumps whose internal surfaces not verified as being decontaminated

   CWM:
   A. Added TOC, TOX, pH, TCLP. If not TCLP or corrosive, and if TOC/TOX are $\leq$ 100 ppm, the unit is considered to be adequately decontaminated
   B. Acknowledged/incorporated
   C. Acknowledged/incorporated

92. <u>Soil Sampling</u>
   A. Must identify parameters
   B. Must include background levels to use as cleanup criteria
   C. Grid and sampling strategies must be provided
   D. Closure plan must be a stand-alone document
   E. Procedures for assessing soils under cracks

   CWM:
   A. Priority pollutants, PCB's, TCLP metals
   B. See 8/8/89 NOD response
   C. Number, depth per EPA's PCB spill site cleanup procedures
   D. Document revised
   E. Use nondestructive techniques to see if crack penetrated through. If so, soil will be sampled

93. <u>Testing of ash from closure operation of incinerator</u>
   Does not apply to CHI proposed activities

94. <u>Closure of Miscellaneous Units</u>
   A. Outdoor storage areas (kiln staging, sampling, ash pad)
   B. Sewer drains, sewer lines and wastewater treatment system used as part of secondary containment system
      Check sewer for cracks, gaps
      Flushing the lines with detergent is not adequate

   CWM:
   A. Acknowledged/incorporated
   B. Not part of secondary containment. Not applicable
      However, CWM agreed to address sewer at time of closure assuming the followig procedures:
      ~ Triple rinse with detergent and water
      ~ Inspect with video cameras to identify contain/cracks
      ~ If structural defect, excavate and replace or line
      ~ If contamination likely, excavate/analyze

95. Surficial sweeping of asphalt not enough. Must sample asphalt and underlying soil
CWM: Asphalt/soil sampling incorporated

96. Refractory from the kiln, secondary combustion and quench section must be disposed as a hazardous waste
CWM: Addressed/incorporated

Final Permit/B, 1, 4 USEPA

State of Illinois
ENVIRONMENTAL PROTECTION AGENCY

Mary A. Gade, Director
217/524-3300

2200 Churchill Road, Springfield, IL 62794-9276

September 30, 1993

Illinois International Port District
3600 East 95th Street
95th & the Lakefront
Chicago, Illinois 60617-5193

Clean Harbors of Chicago, Inc.
11800 South Stony Island Avenue
Chicago, Illinois 60617

Re: 0316000051 -- Cook County
Clean Harbors of Chicago, Inc.
ILD000608471
RCRA Log 16
RCRA Part B -- Administrative Record

Gentlemen:

Enclosed is a RCRA Hazardous Waste Management Part B permit. The final permit decision is based on the administrative record contained in the Agency's files. The contents of the administrative record are described in 35 Illinois Administrative Code (IAC) Section 705.211.

This permit is divided into two permits: A RCRA permit issued by IEPA and a Hazardous Waste Management Permit issued by USEPA. The USEPA permit generally contains only those provisions and conditions raised pursuant to the Hazardous and Solid Waste Amendments of 1984 to RCRA (HSWA). The IEPA permit also enforces portions of HSWA where IEPA has authority to do so. Read both documents carefully. Failure to meet any portion of either permit could result in civil and/or criminal penalties.

Within 35 days after the notification of a final permit decision, the permittee may petition the Illinois Pollution Control Board to contest the issuance of the permit. The petition shall include a statement of the reasons supporting a review, including demonstration that any issues raised in the petition, were previously raised during the public comment period. In all other respects the petition shall be in accordance with the requirements for permit appeals as set forth in 35 I.A.C. Part 105. Nothing in this paragraph is intended to restrict appeal rights under Section 40(b) of the Environmental Protection Act (35 I.A.C. 705.212(a)). If you intend to appeal the USEPA issued permit, contact USEPA -- Region V concerning the appeal procedures.

This permit does not restrict the Agency's authority to impose additional corrective action at the facility. The term "facility" is not limited to those portions of the owner's property at which units for the management of solid or hazardous are located, but rather extends to all contiguous property under the owner or operator's control (see 50 FR 28712). If the Agency determines that additional corrective action is warranted, a permit modification would be required. Any final action taken on a permit modification by the Agency will be subject to the appeal provisions set fourth in Sections 39 and 40 of the Illinois Environmental Protection Act.

State of Illinois
ENVIRONMENTAL PROTECTION AGENCY

Mary A. Gade, Director

2200 Churchill Road, Springfield, IL 62794-9276

RCRA Log No. 16

ILLINOIS ENVIRONMENTAL PROTECTION AGENCY

HAZARDOUS WASTE MANAGEMENT RCRA PART B PERMIT

IEPA #0316000051 -- Cook County
USEPA ILD #000608471
Chicago/Clean Harbors of Chicago, Inc.
Permit Log #16
RCRA -- Part B - Administrative Record

Issue Date: September 30, 1993
Effective Date: November 4, 1993
Expiration Date: November 4, 2003

Illinois International Port District
3600 East 95th Street
95th & the Lakefront
Chicago, Illinois 60617-5193

Clean Harbors of Chicago, Inc.
11800 South Stony Island Avenue
Chicago, Illinois 60617

A Part B Permit is hereby granted pursuant to the Resource Conservation and Recovery Act, Illinois Environmental Protection Act, and Title 35 Ill. Adm. Code Parts 702, 703, 705, and 720 through 729 to Clean Harbors of Chicago, Inc. and the Illinois International Port District (herein known as the Permittee(s)) to construct, maintain and operate a waste management facility involved in the treatment and storage of hazardous waste. The site is located at 11800 South Stony Island Avenue in Chicago, Illinois.

This permit consists of the conditions contained herein (including those in any attachments and appendices) and applicable regulations contained in the Illinois Environmental Protection Act and Title 35 Ill. Adm. Code Parts 702, 703, 705 and 720 through 729 in effect on the effective date of this permit. The Environmental Protection Act ("Act") Ill. Rev. Stat., Ch. 111-1/2, par. 1039 grants the Illinois Environmental Protection Agency the authority to impose conditions on permits which are issued.

If you have any questions regarding this draft permit, please contact Mark A. Schollenberger at 217/524-3307.

Lawrence W. Eastep, P.E., Manager
Permit Section
Division of Land Pollution Control
Bureau of Land

LWE:MAS:lat/sp/218Y,11

0316000051
RCRA Log No. 16

RCRA HAZARDOUS WASTE MANAGEMENT PERMIT
CLEAN HARBORS OF CHICAGO

ILD No. 000608471

TABLE OF CONTENTS

ITEM	PAGE(S)
General Facility Description	i - v
List of Plans and Documents Contained in the Approved Permit Application	vi
I. Containers	I-1 - I-11
II. Tank Systems	II-1 - I-12
III. Reporting and Notification Requirements	III-1 - III-6
IV. Corrective Action	IV-1 - IV-14
V. Standard Conditions	V-12 - V-12

LIST OF ATTACHMENTS

0316000051

PAGES

Attachment A - List of Wastes that can be Accepted at this Facility ..... A-1 - A-41

Attachment B - Inspection Schedule ..... B-1 - B-6

Attachment C - Construction Certification Form ..... C-1 - C-3

Attachment D - Special Conditions ..... D-1 - D-13

Attachment E - Closure Certification Forms ..... E-1 - E-2

Attachment F - Required Scope of Work for A RCRA Facility Investigation ..... F-1 - F-20

Attachment G - Approved Permit Section Identification ..... G-1 - G-23

Attachment H - Financial Assurance Requirements ..... H-1 - H-2

DESCRIPTION OF THE FACILITY

The facility has been a RCRA waste management facility since 1980 and its present activities include: 1) storage and treatment of aqueous-based waste streams in an on-site waste water treatment system; and 2) storage, consolidation and transfer of containerized hazardous and nonhazardous wastes, including laboratory packed wastes (i.e., lab packs). Pre-1980 activities included landfilling, injection of wastewaters into a well and neutralization of wastewaters in impoundments. The facility is located on a 26.5067 acre parcel in the City of Chicago, Cook County, Illinois at 11800 South Stony Island Avenue.

The following operations are proposed:

i) A new bulk tank storage system and treatment operation for "listed" hazardous waste liquids and solids;

ii) A new bulk tank storage system and fuel blending operation to produce and store organic-based hazardous waste fuels which will be shipped off-site for energy recovery as a supplemental fuel;

iii) An expanded container storage area;

iv) An expanded lab pack storage, repack, and consolidation operation;

v) A new storage area for bulk storage of hazardous and nonhazardous wastes in roll-off containers;

vi) A new storage area for temporary storage of medical waste;

vii) A new drum crushing and compacting system; and

viii) A new rail car transfer operation.

WASTE MANAGEMENT ACTIVITIES

A. <u>Container Storage - Hazardous</u>

There are two existing container storage areas for hazardous waste at this site. These areas are depicted in Appendix D-3 and Appendix D-4 in Volume 1 of the application. The indoor storage area in Building No. 2 measures approximately 26 feet by 85 feet. It is divided into four bays, a staging area, an acidic waste storage area, an alkaline waste storage area and an organic waste storage area. A total of 30,360 gallons (552 55 gallon drums equivalents) may be stored in this area. The outside

storage area is divided into six bays, a staging area, a reactive waste storage area, an oxidizer storage area, a poison storage area and two flammable waste storage areas and can hold a total of 35,776 gallons (688 55 gallon drums equivalents). The expansion of this area will add five more storage bays and an additional 29,920 gallons (544 55 gallon drum equivalents) storage capacity.

An additional 1,925 gallons (35 55 gallon drums equivalents) may be stored in the proposed lab pack building as shown in Appendix D-11 or 2,640 gallons (48 55 gallon drums equivalents) may be stored in the proposed fuel blending building as shown in Appendix D-13.

Current lab packing activities, consolidation, repacking and use (the acids and bases are used as reagents in the wastewater treatment plant) are conducted in Process Building No. 1 on the mezzaine level on Chamber 3 of the reactor. A total of 440 gallons (8 55 gallon drums equivalents) may be stored in this area.

Hazardous bulk solids are to be stored in roll-off containers as shown in (1) Appendix D-16 (six (6) 30 cubic yard containers, the proposed bulk solids storage pad) (2) Appendix B-5 (three (3) 30 cubic yard containers on the existing outdoor loading/unloading area) and (3) Appendix D-13 (one (1) 30 cubic yard container in proposed process Building No. 3).

A mobile compactor (CTI PRO 8560) with a carbon adsorption unit may be used within the container storage areas to reduce the volume of wastes.

All of these areas are provided with secondary containment to contain and control spills, leaks and precipitation in these areas. Hazardous wastes which may be stored are identified in Attachment A of the draft permit. Permit conditions in Section I of the permit are specific to container storage and implement the regulatory requirements of 35 Ill. Adm. Code 724, Subpart I.

B. <u>Container Storage - Nonhazardous</u>

There is one existing area dedicated solely to nonhazardous container storage area in Building No. 2 located underneath the filter press (one (1) 30 cubic yard container). There are four (4) proposed areas. These are:

i) A medical waste storage pad (two (2) 45-foot box trailers) as shown in Appendix D-16;

ii) One (1) 30 cubic yard roll-off container in the proposed drum crusher area;

iii) A bulking pad for solids (one (1) 30 cubic yard roll-off container as shown in Appendix D-4;

iv) One (1) 30 cubic yard roll-off container in the proposed fuel blending area for empty and crushed drums; and

v) The storage of self-contained trailers (for household hazardous wastes) on any asphalted portion of the facility.

Nonhazardous wastes are also stored in the hazardous waste storage areas.

C. Tank Storage - Hazardous

A brief description of the tanks at the facility is provided below. Existing tanks, exempt from RCRA Permitting, wastewater treatment units permitted pursuant to 35 Ill. Adm. Code 310.

i) Four (4) 7,000 gallon in-ground, concrete receiving tanks;

ii) A 212,000 gallon steel, primary settling tank;

iii) A 424,000 gallon steel, mix tank;

iv) A chemical treatment unit (IPSI Model #SAL2-100), 4,800 gallon steel tank;

v) Four (4) gravitators/clarifiers (IPSI Model #ESS-075), 2,450 gallon steel tanks;

vi) A 6,450 gallon steel, secondary clarifier;

vii) A 188,500 gallon steel, effluent discharge tank;

viii) A 212,000 gallon steel, sludge concentrator tank;

ix) A 10,400 gallon steel, sludge conditioning tank;

x) A plate and frame filter press (Netzch Model 1200/88);

xi) A chemical reduction/oxidation pretreatment system (for hexavalent chrome, cyanide, phenolic and ammonia contaminated waste streams) consisting of one 3-compartment reactor vessel. The compartments are sized at, 13,000 gallons, 13,570 gallons and 5,200 gallons, respectively and each is equipped with an air scrubber emission control system;

xii) An oily wastewater pretreatment system consisting of two (2) 6,000 gallon steel, oil/water separators, a heat exchanger, a 6,000 gallon steel (oil storage) tank and a 6,000 gallon steel (cuff storage) tank;

xiii) A carbon adsorption system (Baron-Blakeslee's Dual Bed Model No. CAV40-EX), including a water/solvent condensate separation unit designed to control organic emissions for the aerated storage/mix tanks and oil/water separators;

xiv) A sludge dewatering system consisting of a 10,400 gallon sludge feed tank and a trailer-mounted recessed plate and frame filter press (Netzch Model 1200/88);

xv) Two (2) 318 gallon mixing chambers;

xvi) One (1) 880 gallon flocculation tank;

xvii) One (1) 1,900 gallon surge tank;

xviii) One (1) 13,000 gallon in-ground, concrete, sludge storage tank; and

xix) One (1) 1,050 gallon surge tank.

Proposed tanks, exempt from RCRA permitting, wastewater treatment units to be permitted pursuant to 35 Ill. Adm. Code 310:

i) A 11,780 gallon steel, sludge conditioning tank;

ii) One (1) 13,570 gallon reactor vessel, equipped with an wet scrubber system; and

iii) One (1) 8,835 gallon reactor vessel, equipped with an wet scrubber system.

Proposed RCRA tanks for Listed Waste Treatment and Storage:

i) Eight (8) 11,025 gallon storage tanks;

ii) One (1) 13,570 gallon reactor tank with wet scrubber system;

iii) One (1) 1,200 gallon Lamella clarifier;

iv) One (1) 4,100 gallon clarifier waste collection tank;

v) One (1) 3,770 gallon sludge conditioning tank;

vi) A sand filtration system consisting of two units (overall capacity 750 gallons each) with a 1,270 gallon backwash collection tank;

vii) One (1) 2,640 gallon effluent collection tank; and

viii) Two (2) 1,300 gallon carbon adsorption unit.

Proposed RCRA tanks for flammable storage/fuel blending operations:

i) Four (4) 11,025 gallon storage tanks;

ii) Four (4) 19,880 gallon storage tanks;

iii) One (1) 1,225 gallon dispersion tank; and

iv) One (1) 275 gallon overflow tank.

Hazardous wastes which may be accepted for storage/treatment in tanks are identified in Appendix A of the draft permit.

Tank system permit conditions deal with constructing, operating and maintaining the tank system in accordance with the design plans and operating specifications. Permit conditions in Section II of the permit are specific to tank systems for storage and implement the regulatory requirements of 35 Ill. Adm. Code 724, Subpart J.

List of Plans and Documents Contained in the Approved Permit Applications

Under Illinois solid and hazardous waste regulations, the Permittee(s) has prepared the following formal plans and documents covering various facets of the design, operation and monitoring of hazardous waste management units. The location of each plan or document in the Approved Permit Application is also identified below.

Plan or Document	Location in the Approved Permit Application
1. Waste Analysis Plan	Section C-2
2. Inspection Plan	Section F-2
3. Contingency Plan	Section G
4. Closure Plan	Section I
5. Training Program	Section H
6. Design Plans and Operating Specifications For Containers	Section D-1
7. Design Plans and Operating Specifications For Tank Systems	Section D-2, Table D-3 through D-6

SECTION I: CONTAINER STORAGE

A. Summary

Containers of hazardous waste received at the facility will arrive in a variety of containers but typically in 55 gallon steel or plastic drums. Other containers may be accepted provided they are Department of Transportation ("DOT") approved, in good condition, compatible with the waste they contain and can be safely managed by facility. These containers shall only be stored in the areas designated in Condition I(B)(1).

B. Waste Identification

1. The storage of all hazardous waste containers shall be in the areas identified below:

	Maximum Containment Volume	Maximum Number And Type of Containers Or Equivalents
a) Existing Units		
1) The Inside Storage Area (Within Processing Building No. 2); and		
i) Staging area	860 gallons	72-55 gallon drums
ii) Acidic drums area	1,305 gallons	192-55 gallon drums
iii) Alkaline drums area	558 gallons	96-55 gallon drums
iv) Organic drums area	1,089 gallons	192-55 gallon drums
2) The Outside Storage Pad		
i) Unloading area	27,675 gallons	3-30 cu. yrds. roll-off boxes
ii) Staging area	2,500 gallons	80-55 gallon drums
iii) Flammable Storage #1	4,693 gallons	160-55 gallon drums
iv) Flammable Storage #2	4,693 gallons	160-55 gallon drums
v) Oxidizers Storage #1	2,767 gallons	96-55 gallon drums
3) The Inside Lab Pack Area (Within Processing Building No. #1)		
i) Pour-Off Area	17,166 gallons	8-55 gallon drums

	Maximum Containment Volume	Maximum Number And Type of Containers Or Equivalents
vi) Reactives Storage #1	2,767 gallons	96-55 gallon drums
vii) Poisons Storage #1	2,767 gallons	96-55 gallon drums

b. Proposed Areas

1) Expansion of Existing Outside Storage Area

i) Flammable Storage #3	4,693 gallons	160-55 gallon drums
ii) Oxidizers Storage #2	2,767 gallons	96-55 gallon drums
iii) Reactives Storage #2	2,767 gallons	96-55 gallon drums
iv) Poisons Storage #2	2,767 gallons	96-55 gallon drums
v) Staging Area	3,031 gallons	96-55 gallon drums

2) The Lab Pack Building

i) Acids Storage Area	63 gallons	5-55 gallon drums
ii) Bases Storage Area	63 gallons	5-55 gallon drums
iii) Organics Storage Area	63 gallons	5-55 gallon drums
iv) Oxidizers Storage Area	71 gallons	5-55 gallon drums
v) Pesticides Storage Area	83 gallons	5-55 gallon drums
vi) Organics pour-off area	71 gallons	4-55 gallon drums
vii) Flammables Storage Area	83 gallons	6-55 gallon drums
3) The Fuel Blending Building	6,489 gallons	48-55 gallon drums
4) Process Building No. 3 and	14,697 gallons	1-30 cu. yds. roll-off boxes
5) The Bulk Solids Storage Pad	1,426 gallons per bay	6-30 cu. yds roll-off boxes

2) The Permittee(s) may receive and store the hazardous waste identified in Attachment A in containers and any nonhazardous waste which has been approved by this Agency through a supplemental waste stream permit. All nonhazardous waste must be evaluated through the waste analysis plan for compatibility.

3) The Permittee(s) is prohibited from storing a hazardous waste that has not been identified in Attachment A.

4) Only those containers that hold wastes that do not contain free liquids (i.e., passes the paint filter test identified in 35 Ill. Adm. Code 729.320) may be stored in the container storage area identified in Condition I(B)(1)(b)(5).

5) The Permittee(s) is prohibited from adding additional container storage areas without the appropriate permit modification in accordance with 35 Ill. Adm. Code 703 Appendix A.

C. Condition of Containers

1. If a container holding waste is not in good condition (e.g., severe rusting, apparent structural defect, etc.) or if it begins to leak (this includes waste which appears on the outside of the drum/box but has not spread to the containment base or other containers), the Permittee(s) must immediately transfer the waste from this container to a container that is in good condition or manage the waste in accordance with the Approved Permit Application.

2. Any transfer of waste which was required to comply with I(C)(1), must be recorded in a separate log and maintained as part of the facilities operating record.

3. Packaging of all wastes accepted for storage in the container storage area shall meet the requirements of 49 CFR 172, 178 and 179 and all applicable D.O.T. and N.F.P.A. regulations. All containers must be marked and labeled in accordance with 49 CFR 172.

4. The contents of each container shall be clearly identified on the side of the container in accordance with 49 CFR 172 prior to being placed in the container storage area.

D. Compatibility of Waste With Containers

The Permittee(s) must use a container made of or lined with material which will not react with and is otherwise compatible with the waste to be stored so that the ability of the container to contain the waste is not impaired.

E. Management of Containers

The Permittee(s) shall comply with the following management practices:

1. A container holding waste must always be closed during storage, except when it is necessary to add or remove or sample waste.

2. A container holding waste must not be opened, handled, or stored in a manner that may rupture the container or cause it to leak.

3. All aisles between each row of pallets and between pallets and a wall in a pile must be a minimum of two feet wide. This is necessary to provide adequate access for the inspection of each container.

4. Containers may be stacked provided that:

   a. Only the same size or smaller containers are stacked on top of the containers beneath.

   b. 55-gallon or larger containers are separated by a pallet or other dunnage to provide stability.

   c. A pallet for stability for smaller size containers shall be used when the height of the stack exceeds 42 inches unless the containers are shrink wrapped. 55-gallon or larger containers may be stacked 2-high with a pallet under each container. Smaller containers may be stacked as long as the height of the stack does not exceed the height of two 55 gallon containers on pallets (i.e. 84 inches).

   d. 55-gallon or larger containers may not be stacked in the flammable storage areas. Smaller containers may be stacked so long as the height of the stack does not exceed the height of one 55-gallon drum on a pallet (i.e. 42 inches).

5. The containers shall be clearly marked with the date received prior to being placed into storage.

6. The following management practices apply to arrangements of containers that contain one or more containers of flammable or combustible liquids as defined in NFPA 30.

   a. Each arrangement of containers (pile) as defined below shall be separated from other arrangements by a five foot aisle. The maximum volume of containers in each arrangement shall not exceed the following:

i. 1,100 gallons for arrangements with one or more containers of waste which have a flash point below 73°F and a boiling point below 100°F.

ii. 2,200 gallons for arrangements with one or more containers of waste having a flash point below 73°F and a boiling point above 100°F.

iii. 4,400 gallons for arrangements with one or more containers of waste having a flash point at or above 73°F and below 100°F.

iv. 8,800 gallons for arrangements with one or more containers of waste having a flash point at or above 100°F and below 140°F.

v. 22,000 gallons for arrangements which do not contain one or more containers of waste having a flash point below 140°F.

b. An aisle that is a minimum of two feet wide must be maintained within the arrangement between each row of pallets and between pallets and a wall in a pile. This is necessary to provide adequate access for the inspection of each container.

F. Inspection

The Permittee(s) shall inspect the container storage area in accordance with the inspection schedule specified in Attachment B to this Permit. The inspection must be adequate to detect leaks and deterioration of containers and the containment system caused by corrosion or other factors. The procedures described in the approved permit application must be used with the following modifications:

1. Action shall be taken to immediately overpack a leaking or deteriorating drum or to transfer the waste to a container in good condition. Appropriate action to clean up any release of waste from a leaking or deteriorated drum shall be carried out immediately after the drum has been overpacked or the waste transferred to a container in good condition.

2. If a portion of the containment system is found to be in a deteriorated condition (cracks, gaps, spalling, failure of the coating, etc.) the Permittee(s) shall immediately remove all waste containers from the deteriorated area until the containment system has been repaired.

3. The container loading/unloading area shall be inspected daily for spills and releases. If spills and releases are observed, such releases shall immediately be remediated in accordance with all applicable regulations and special conditions found herein. Results of this inspection and a description of the corrective action taken, if necessary, shall be documented in the inspection log.

4. The inspection shall include checking aisle space, height of stacks and remaining capacity.

5. Results of all inspections and the activities undertaken to correct deficiencies shall be documented in the operating record for the facility.

G. Containment

The Permittee(s) shall construct, operate and maintain the containment system according to the design plans and operating specifications contained in the Approved Permit Application, subject to the following modifications.

1. Clean Harbors shall perform a complete inspection of the surface coating yearly and perform annual maintenance to insure the integrity of the coating. Clean Harbors shall document the date of the surface coating inspection and any maintenance of the surface coating. These inspections must be performed no later than December 31, of each year.

2. It shall not be an act of non-compliance if the coating has been installed properly but does not live up to the manufacturer's printed performance standards and fails due to excessive wear or chemical breakdown. The Permittee(s) shall notify the Agency within thirty days of becoming aware of the failure. The Permittee(s) shall reapply a different coating specified in the approved permit application or submit a modification of its permit to install a new coating within 180 days of the failure of the coating.

H. Special Requirements for Ignitable or Reactive Waste

1. The Permittee(s) shall not locate containers which hold ignitable or reactive waste within 50 feet of the facility's property line.

2. The Permittee(s) shall take precautions to prevent accidental ignition or reaction of ignitable waste.

3. Ignitable wastes must be separated and protected from sources of ignition or reaction including but not limited to:

a. Open flames, smoking, cutting and welding, hot surfaces, frictional heat, sparks (e.g., static, electrical, or mechanical), spontaneous ignition (e.g., from heat producing chemical reactions), and radiant heat.

b. While ignitable waste is being handled, the Permittee(s) must confine smoking and open flame to specially designated locations.

c. "No Smoking" signs must be conspicuously placed wherever there is a hazard from ignitable waste.

I. Special Requirements for Incompatible Waste

1. The Permittee(s) shall not store containers holding a material that is incompatible with any waste or other materials stored nearby, unless separated from other waste/materials or protected from them by means of a dike, berm or other devices. Incompatible materials are defined in Attachment D to this permit.

J. General Operating Requirements

The Permittee(s) shall operate the container storage area in accordance with the approved permit application, subject to the following modifications:

1. The Permittee(s) may receive hazardous waste for storage in containers provided the following requirements are met.

   a. The material must be a waste which has been identified in Attachment A to this permit.

   b. The waste must be analyzed in accordance with all applicable regulations and the approved waste analysis plan.

   c. The facility must have a special waste stream permit or generic permit to receive the waste.

   d. The waste must be accompanied by a properly completed Illinois manifest.

2. Cleanup of all spills inside the secondary containment areas must begin immediately upon discovery and be completed within 24 hours. Secondary containment must be inspected immediately after cleanup for cracks, gaps or other defects (failure of the coating) which would allow waste to migrate to the underlying soil. If any deterioration is discovered, the permittee shall immediately remove all waste from the deteriorated area. All cleanup operations shall be documented in the facility's operating record.

3. The Permittee(s) shall remove any precipitation which accumulates in the secondary containment system within 24 hours of the time such accumulation is discovered.

4. All hazardous and nonhazardous special wastes stored or generated by this facility which require further treatment or disposal off-site must be transported to the receiving facility in accordance with the applicable regulations in 35 Ill. Adm. Code Parts 709, 702, 723, 307 and 309, and the Agency's Supplemental Waste Stream Permit and Manifest System.

5. The Permittee(s) shall obtain an authorization from the Agency under the provisions of Section 39(h) of the Illinois Environmental Protection Act for each hazardous wastes stream to be disposed in an Illinois permitted hazardous waste landfill prior to shipping the waste to the landfill. To obtain this authorization, the Permittee(s) must demonstrate that, considering technological feasibility and economic reasonableness, the hazardous waste cannot be reasonably recycled for reuse, nor incinerated or chemically, physically or biologically treated so as to neutralize the hazardous waste and render it nonhazardous.

K. General Construction Requirements

1. The Permittee(s) is authorized to construct the proposed Container Management Units identified in Section I.B.1.b. The container storage areas may only be constructed in accordance with the approved Permit Application, subject to the following modifications:

   a. Within thirty days after completing construction and prior to any container of waste being placed or stored in the container storage areas, the Permittee(s) shall submit to the Agency a certification from a qualified, registered professional engineer, demonstrating that the container storage area meets the requirements of 35 Ill. Adm. Code 724.275(b). This certification document shall contain the information required in Attachment C and a statement that the base slab is free of cracks or gaps.

   b. The Permittee(s) may not store wastes in these areas until the construction certification is approved.

L. Closure

At closure, all waste and waste residues must be removed from the containment system. Remaining containers, liners, bases, and soil containing or contaminated with waste or waste residue must be decontaminated or removed. Closure of the container storage areas shall

be carried out in accordance with the closure plan in the approved Permit Application, as modified below:

1. The Permittee(s) shall notify the Agency's Division of Land Pollution Control in writing of its intent to close the container storage areas at least 45 days prior to the date closure is expected to begin. Along with this notification, the Permittee(s) shall submit the sampling and analysis plan to be used in demonstrating a storage area has been properly decontaminated. Closure shall not begin without written approval from the Agency's Division of Land Pollution Control. Agency review of this plan will be subject to the permit appeal provisions contained in Section 39(a) and Section 40(a) of the Act. The response from the Agency shall approve and establish:

   a. The sampling plan;

   b. What contaminants must be analyzed for; and

   c. The level at which decontamination is considered complete.

2. The concrete surfaces shall be visually inspected, photographed and any residue adhering to the surface must be removed by scraping and/or brushing. Following this, the concrete surfaces must be steam cleaned and triple rinsed. All wash and rinse water shall be collected and managed as a hazardous waste, unless the Permittee(s) can document that the waste is not hazardous as defined in 35 Ill. Adm. Code 721.103. An independent, registered, professional engineer must certify that the surface has no cracks, gaps or other defects which would allow waste to migrate through to the underlying soil. Otherwise, sampling in accordance with an approved sampling plan, shall be conducted to verify the underlying soil is uncontaminated.

3. Sweepings, washwaters and rinsates collected during closure of the container storage area shall be managed as a hazardous waste, unless the Permittee(s) can document that the waste is not hazardous as defined in 35 Ill. Adm. Code 721.103.

4. The Permittee(s) shall provide post-closure care in accordance with 35 Ill. Adm. Code Part 724, Subpart G for the container storage areas in the event all of the hazardous wastes or contaminated soils cannot be practicably removed or decontaminated in accordance with the approved closure plan identified in Condition I(L)(1). If it is determined that the closure requirements cannot be met and post-closure care is required, this Permit must be modified to require post-closure care for the container storage areas, in accordance with 35 Ill. Adm. Code Subtitle G, Part 724, Subparts G and H.

5. Should post-closure care, as described in Condition I(L)(4) above, become necessary, the Permittee(s) shall submit an application for modification to this permit, including an amended closure and post-closure care plan for this unit. The application must be submitted within thirty (30) days following discovery that clean closure cannot be accomplished. If a determination is made to not pursue clean closure prior to the implementation of the closure plan for the container storage area, the modification request shall be made no later than sixty (60) days after the determination is made.

6. Financial assurance for closure and post-closure of the container storage areas, if required in accordance with Condition I(L)(4) and I(L)(5) above, shall be provided within thirty (30) days following modification of the permit.

7. Within sixty (60) days after closure of the container storage areas has been completed, the Permittee(s) shall submit certification to the Agency that the unit has been closed in accordance with the approved closure plan. The closure certification form in Attachment E to this permit or a certification with identical wording must be used. Signatures must meet the requirements of 35 Ill. Adm. Code Section 702.126. The independent engineer (registered in the State of Illinois) should be present at all critical, major points (activities) during the closure. These might include soil sampling, soil removal, backfilling, final cover placement, etc. The frequency of inspections by the independent engineer must be sufficient to determine the adequacy of each critical activity. Financial assurance must be maintained for the area(s) until the Agency approves the closure certification for the unit. The Agency's review of closure certification for partial or final closure will be conducted in accordance with 35 Ill. Adm. Code 724.243.

   A Closure Documentation Report must be submitted with the closure certification which includes the following items, if applicable:

   a. The volume of waste and waste residue removed, including wastes resulting from decontamination activities;

   b. A description of the method of waste handling and transport;

   c. Copies of the waste manifests;

   d. A description of the sampling and analytical methods used including sample preservation methods and chain-of-custody information;

   e. A chronological summary of closure activities and the cost involved;

f. Tests performed, methods and results;

g. Color photographs of closure activities which document conditions before, during and after closure; and

h. A scale drawing of all excavated or decontaminated areas and sample locations.

8. To avoid creating another regulated storage unit during closure, it is recommended that you obtain any necessary permits for waste disposal prior to initiating excavation activities. If it is necessary to store excavated hazardous waste on-site prior to off-site disposal, do so only in containers or tanks for less than ninety (90) days. Do not create regulated waste pile units by storing the excavated hazardous waste in piles. The permit exemption (35 Ill. Adm. Code 722.134) only applies to containers and tanks.

9. Under the provisions of 29 CFR 1910 (51 FR 15,654, December 19, 1986), cleanup operations must meet the applicable requirements of OSHA's Hazardous Waste Operations and Emergency Response standard. These requirements include hazard communication, medical surveillance, health and safety programs, air monitoring, decontamination and training. General site workers engaged in activities that expose or potentially expose them to hazardous substances must receive a minimum of 40 hours of safety and health training off site plus a minimum of three days of actual field experience under the direct supervision of a trained experienced supervisor. Managers and supervisors at the cleanup site must have at least an additional eight hours of specialized training on managing hazardous waste operations.

10. If the Agency determines that implementation of this closure plan fails to satisfy the requirements of 35 Ill. Adm. Code, Section 724.211, the Agency reserves the right to amend the closure plan. Revisions of closure plans are subject to the appeal provisions of Section 40 of the Act.

11. Please be advised that the requirements of the Responsible Property Transfer Act (Public Act 85-1228) may apply to your facility due to the management of RCRA hazardous waste. In addition, please be advised that if you store or treat on-site generated hazardous waste in containers or tanks pursuant to 35 Ill. Adm. Code 722.134, those units are subject to the closure requirements incorporated by reference in 35 Ill. Adm. Code 722.134.

SECTION II: TANK SYSTEMS

A. Summary

The tanks at the Clean Harbors of Chicago, Inc. facility are used for a variety of purposes, including wastewater treatment units (pursuant to 35 Ill. Adm. Code 310), and hazardous waste storage and treatment units (pursuant to 35 Ill. Adm. Code 724). Of these uses, the storage and treatment of hazardous waste are the only uses that are regulated under RCRA. Associated with these activities are twenty seven proposed above-ground tanks. All above-ground tanks will have secondary containment consisting of a concrete vault and an impermeable membrane or coating which has been applied to the concrete.

B. Waste Identification

1. The Permittee(s) may store a total volume (in gallons) of waste in the tanks listed below subject to the terms of this permit.

Tank Numbers	No. of Units	Description	Capacity In gallons	Minimum Shell Thickness of Tank (inches)	Material of Construction
121	(6)	Storage Tanks	11025	3/16	Carbon Steel
155	(2)	Storage Tanks	11025	3/16	Carbon Steel
158	(4)	Storage Tanks	11025	3/16	Carbon Steel
159	(4)	Storage Tanks	19,880	3/16	Carbon Steel
123	(1)	Reactor vessel	13,570	3/16	FRP
137	(1)	Lamella clarifier	1,200	3/16	Carbon Steel
138	(1)	Clarifier Waste Collection Tank	4,100	3/16	Carbon Steel
142	(1)	Sludge Conditioning Tank	3,770	3/16	Carbon Steel
149	(2)	Sand Filter	750	3/32	Carbon Steel
150	(1)	Backwash Collection Tank	3,770	3/16	Carbon Steel

Tank Numbers	No. of Units	Description	Capacity In gallons	Minimum Shell Thickness of Tank (inches)	Material of Construction
153	(1)	Treated Effluent Tank	2,640	3/16	Carbon Steel
152	(2)	Carbon Adsorption Unit	1,300	3/16	Carbon Steel
161-21	(1)	Dispersion Tank	1,225	3/16	Carbon Steel
161-22	(1)	Overflow Tank	275	3/16	Carbon Steel

2. The Permittee(s) may store the wastes identified in Attachment A to this permit in the tanks specified above and any nonhazardous waste which has been approved by this Agency through a Supplemental Waste Stream permit. All nonhazardous waste must be evaluated through the waste analysis plan for compatibility.

3. Storage of hazardous waste in tanks other than those specifically identified in II(B)(1) is prohibited.

C. Containment and Detection of Releases

1. The Permittee(s) shall provide secondary containment which meets the requirements of 35 Ill. Adm. Code 724.293 (as amended 7/16/87) for each tank identified above.

2. The Permittee(s) shall construct, operate, and maintain the tank system according to the detailed plans and reports contained in the approved permit application.

3. Clean Harbors of Chicago shall perform a complete inspection of each secondary containment coating system yearly and perform annual maintenance to insure the integrity of the coating. It shall not be an act of non-compliance if the coating has been installed properly but does not live up to the manufacturer's printed performance standards and fails due to excessive wear or chemical breakdown. The Permittee(s) shall notify the Agency within thirty days of becoming aware of the failure. The Permittee(s) shall reapply a different coating specified in the approved permit application or submit a modification of its permit to install a new coating within 180 days of the failure of the coating. Clean Harbors shall document the date of the surface coating inspection and any maintenance of the surface coating. These inspections must be performed no later than December 31, of each year.

4. The Permittee(s) shall inspect all secondary containment sumps daily and remove all liquids contained in the sumps within 24 hours.

D. General Construction Requirements

1. The Permittee(s) is authorized to construct all proposed tank systems listed in Condition II(B)(1)(b) (including all tanks, ancillary equipment and secondary containment). These tank farms may only be constructed in accordance with the approved permit application, subject to the following modifications:

   a. Within thirty days after completing construction and prior to any waste being placed or stored in a tank or its corresponding ancillary equipment, the Permittee(s) shall submit to the Agency a certification from an independent qualified, registered professional engineer. The certification must demonstrate that the tank system meets the requirements of 35 Ill. Adm. Codes 724.292 and 724.293. The certification shall contain the information described in Attachment C and the additional information listed below:

      1. A report documenting the new tank system was inspected for the presence of the following items:

         i. weld breaks;

         ii. punctures;

         iii. scrapes of the protective coatings on the tank or secondary containment system;

         iv. cracks;

         v. corrosion;

         vi. other structural damage or inadequate construction/installation; and

         vii. cracks or gaps in the base slab.

         All defects noted during this inspection must be remedied prior to covering, enclosing or placing the tank system in use.

2. A copy of the leak test performed on all of the new tanks and ancillary equipment, including a description of any repairs performed on the system to remedy the leak(s).

3. Certification that the tanks and ancillary equipment were designed and installed in a manner that is supported and protected against physical damage and excessive stress due to settlement, vibration, expansion or contraction.

b. The Permittee(s) may not store wastes in these areas until the construction certification is approved. The Agency shall review the certification described above to ensure the tank systems and their secondary containment meets the requirements of 35 Ill. Adm. Codes 724.292 and 724.293.

E. General Operating Requirements

1. The Permittee(s) shall not place hazardous wastes in a tank system if they could cause the tank, its ancillary equipment, or the containment system to rupture, leak, corrode, or otherwise fail.

2. The Permittee(s) shall use appropriate controls and practices to prevent spills and overflows from tank or containment systems using the methods specified in the Approved Permit Application.

3. In the event of a leak or a spill in the tank system, the Permittee(s) shall comply with the practices and procedures described in the approved permit application and notify the Agency's DLPC in according with Condition II(I)(1). All reported leaks or spills must be recorded in the Facility's Operating Record.

4. The Permittee(s) shall obtain an authorization from the Agency under the provisions of Section 39(h) of the Act for each hazardous wastes stream to be disposed in an Illinois permitted hazardous waste landfill prior to shipping the waste to the landfill. To obtain his authorization, the Permittee(s) must demonstrate that, considering technological feasibility and economic reasonableness, the hazardous waste cannot be reasonably recycled for reuse, nor incinerated or chemically, physically or biologically treated so as to neutralize the hazardous waste and render it nonhazardous.

5. All hazardous wastes to be received at the tank storage area must be identified in Attachment A to this permit and have been analyzed per all applicable regulations and the requirements identified in the waste analysis plan. In addition, all hazardous and nonhazardous special wastes received at the facility must be permitted by an IEPA issued special waste permit and be accompanied by a properly completed Illinois manifest.

6. An employee of the facility shall be present at all times when waste is being transferred from a tank truck to the receiving tank.

7. Precipitation accumulating within the tank farm shall be removed within 24 hours after the precipitation event has ended.

F. Tank System Certification

1. The Permittee(s) shall obtain and keep on file at the facility written statements by those persons required to certify the design of the tank system and supervise the installation of the tank system as required by 35 Ill. Adm. Code 724.292(g).

2. The Permittee(s) shall obtain and keep on file at the facility a written assessment of the new tank system's integrity (35 Ill. Adm. Code 724.292(a)). The assessment shall be certified by an independent, qualified registered professional engineer in Illinois.

G. Response to Leaks or Spills

In the event of a leak or a spill from the tank system, from a secondary containment system, or if a system becomes unfit (i.e., failure of the coating) for continued use, the Permittee(s) shall remove the system from service immediately and complete the following actions: (35 Ill. Adm. Code 724.296(a)-(f)).

1. Stop the flow of hazardous waste into the system and inspect the system to determine the cause of the release.

2. Remove all waste as necessary from the system within 24 hours of the detection of the leak to prevent further release and to allow inspection and repair of the system. If the Permittee(s) finds that it will be impossible to meet this time period, the Permittee(s) shall notify the Agency and demonstrate that the longer time period is required.

   If the collected material is a RCRA hazardous waste, it must be managed in accordance with all applicable requirements of 35 Ill. Adm. Code Parts 722-724.

3. Contain visible releases to the environment. The Permittee(s) shall immediately conduct a visual inspection of all releases to the environment and based on that inspection: (1) prevent further migration of the leak of spill to soils or surface water and (2) remove and properly dispose of any visible contamination of the soil or surface water.

4. Close the system in accordance with the Closure Plan, contained in the approved Permit Application, unless the following actions are taken:

   a. For a release caused by a spill that has not damaged the integrity of the system, the Permittee(s) shall remove the released waste and make any necessary repairs to fully restore the integrity of the system before returning the tank system to the service.

   b. For a release caused by a leak from the primary tank system to the secondary containment system, the Permittee(s) shall repair the primary system prior to returning it to service.

H. Inspections

1. The owner or operator must inspect in accordance with the inspection schedule in Attachment B to this Permit.

2. If a leak or spill is observed during the daily inspections, the Permittee(s) shall immediately remove the tank system in question from service and follow the procedures set forth in 35 Ill. Adm. Code 724.296.

3. Precipitation accumulating in the sumps of the secondary containment system at the loading dock shall be removed within 24 hours after the precipitation event has ended.

4. Releases of hazardous waste from spills and leaks which are observed in the secondary containment system shall also be removed within 24 hours and managed as a hazardous waste.

5. The bulk liquid unloading area shall be inspected in the following manner:

   a. The area shall be inspected for the presence of spills and releases after each truck has been unloaded. If observed, such releases shall be cleaned up immediately.

   Documentation of these inspections and any corrective actions taken shall be included in the operating record for the facility.

6. The Permittee(s) shall inspect each tank system to assess its condition. This inspection shall consist of a visual inspection, a pressure test and an ultrasonic thickness test in accordance with the following procedures:

   a. An ultrasonic thickness test shall be conducted annually on the carbon steel tanks.

   b. A hydrostatic leak test or other integrity assessment as approved by the Agency shall be conducted annually on the tank ancillary equipment.

   c. A detailed visual inspection of the carbon steel tank's interior shall be conducted every fifth year to ensure the tank's integrity. During this internal inspection, the internal surface shall be inspected for rust, cracks and thin areas. Corrective action as specified by a qualified registered professional engineer or corrosion technician shall be taken if the internal inspection indicates that the interior surface of a tank system has been detrimentally affected by the hazardous waste which has been stored in it.

   d. For all FRP Tanks; a detailed visual inspection of the tank's interior shall be conducted on an annual basis to ensure the tank's integrity. During this internal inspection, the interior surface shall be inspected for softening, indentations, cracks, exposed fibers, aging, checking, lack of surface resins, delamination, translucency/discoloration, air bubbles and thin areas. Corrective action as specified by the manufacturer of these tanks shall be taken if the internal inspection indicates that the interior surface of a tank system has been detrimentally affected by the hazardous wastes which have been stored in it.

   e. Tanks shall be entered in accordance with 29 CFR 1910.94(d)(11). The first internal inspection shall be conducted within five years after a proposed tank becomes operational.

   f. The inspection of each tank shall be certified by a qualified, registered professional engineer, or corrosion technician.

   g. All waste and washwater generated during evacuation of the tanks shall be managed as a hazardous waste, unless the Permittee(s) can document that the waste is not hazardous as defined in 35 Ill. Adm. Code 721.103.

h. Results of the inspection shall be submitted to the Division of Land Pollution Control of this Agency within 60 days of the inspection date, and shall also be included in the operating record of this facility.

i. If the results of these inspections indicate a tank system is leaking, the procedures set forth in 35 Ill. Adm. Code 724.296 (as amended July 16, 1987) shall be followed.

I. Reporting and Recordkeeping

1. The Permittee(s) shall report to the Agency's Division of Land Pollution Control Field Office within twenty-four (24) hours when a leak or spill occurs in the tank system or secondary containment system unless the spill or leak of hazardous waste is less than or equal to one pound in quantity and it is immediately contained and cleaned up.

2. Within thirty (30) days of detecting a release as described above to the environment from the tank system or secondary containment system, the Permittee(s) shall report the following information in writing to the Division of Land Pollution Control of this Agency:

   a. Likely route of migration of the release.

   b. Characteristics of surrounding soil (including soil composition, geology, hydrogeology, and climate).

   c. Results of any monitoring or sampling conducted in connection with the release.

   d. Proximity to downgradient drinking water, surface water, and populated areas.

   e. Description of response actions taken or planned.

3. The Permittee(s) shall submit to the Agency all certifications of major repairs to correct leaks within seven days from returning the tank system to use (35 Ill. Adm. Code 724.296(f)).

J. Special Requirements for Ignitable or Reactive Wastes

1. The Permittee(s) shall not place ignitable waste in the tank system, unless the procedures specified in the Approved Permit Application are followed.

2. The Permittee(s) shall comply with the requirements for the maintenance of protective distances between the waste management area and any public ways, streets, alleys, or an adjoining property line that can be built upon as required in Tables 2-1 through 2-6 of the National Fire Protection Association's "Flammable and Combustible Liquids Code" (1990).

3. "No Smoking" signs must be conspicuously placed wherever there is a hazard from ignitable waste.

K. Special Requirements For Incompatible Wastes

1. The Permittee(s) shall not place incompatible wastes together in the same tank system. The facility shall not store waste in a tank which previously held an incompatible waste, unless the tank system has been decontaminated. Incompatible wastes are identified in Attachment D of this Permit.

L. Closure

At closure, all waste and waste residues must be removed from tanks, discharge control equipment and containment structures. Closure of the tank storage area shall be carried out in accordance with the closure plan in the approved permit application, as modified below:

1. The Permittee(s) shall notify the Agency's Division of Land Pollution Control in writing of its intent to close the tank system at least 45 days prior to the date closure is expected to begin. Along with this notification, the Permittee(s) shall submit the sampling and analysis plan to be used in demonstrating a tank system has been properly decontaminated. The plan shall be approved by the Agency's Division of Land Pollution Control in writing prior to being implemented. Agency review of this plan will be subject to the permit appeal provisions contained in Section 39(a) and Section 40(a) of the Act. The response from the Agency shall approve and establish:

   a. The sampling plan;

   b. What contaminants must be analyzed for; and

   c. The level at which decontamination is considered complete.

2. The concrete surfaces shall be visually inspected, photographed and any residue adhering to the surface must be removed by scraping and/or brushing. Following this, the concrete surfaces must be steam

cleaned and triple rinsed. All wash and rinse water shall be collected. For tank systems which include secondary containment systems which met the requirements of 35 Ill. Adm. Code 724.293 at the time of installation, the secondary containment must be certified by an independent, registered, professional engineer indicating that the surface has no cracks, gaps or other defects which would allow waste to migrate through to the underlying soil. If such a certification cannot be made, soil sampling and analysis must be conducted to establish clean closure.

Sweepings collected during closure of any tank system shall be managed as a hazardous waste. All washwater and rinsate generated during the closure of these units shall also be managed as a hazardous waste.

3. The Permittee(s) shall provide post-closure care in accordance with 35 Ill. Adm. Code Part 724 for a tank system if all of the hazardous wastes or contaminated soils cannot be practicably removed or decontaminated in accordance with the closure requirements outlined in this permit and in the approved closure plan. If it is determined that the closure requirements cannot be met and post-closure care is required, the tank system shall be considered to be a landfill and the post-closure care plan in the approved application will be modified as required to provide adequate post-closure care for the affected tank system(s) in accordance with 35 Ill. Adm. Code, Subtitle G, Part 724, Subparts G and H.

4. Should post-closure care, as described in Condition 3 above, become necessary, the Permittee(s) shall submit an application for modification to this permit, including an amended closure plan and post-closure care plan for the affected tank system within thirty (30) days following discovery that clean closure cannot be accomplished. If a determination is made not to pursue clean closure prior to the implementation of the closure plan for the tank system, the modification request shall be made no later than sixty (60) days after the determination is made.

5. Financial assurance for closure and post-closure of any tank system being closed as a landfill, when required in accordance with Conditions 3 and 4 above, shall be updated within thirty (30) days following modification of the permit under the provisions of Condition 4 above.

6. Within sixty (60) days after closure of any tank system is complete, the Permittee(s) shall submit certification to the Agency that the unit has been closed in accordance with the approved closure plan.

The closure certification form in Attachment E to this permit or a certification with identical wording must be used. Signatures must meet the requirements of 35 Ill. Adm. Code Section 702.126. The independent engineer should be present at all critical, major points (activities) during the closure. This might include soil sampling, soil removal, backfilling, final cover placement, etc. The frequency of inspections by the independent engineer must be sufficient to determine the adequacy of each critical activity. Financial assurance must be maintained for each tank system identified in Condition B.1 above. Documents regarding financial assurance for closure of this facility may be modified after the Agency approves the closure certification for any or all of the tank systems. The Agency's review of closure certifications for partial or final closure will be reviewed in accordance with 35 Ill. Adm. Code 724.243.

A Closure Documentation Report must be submitted with the closure certification which includes the following items, if applicable:

a. The volume of waste and waste residue removed, including wastes generated during decontamination procedures.

b. A description of the method of waste handling and transport.

c. Copies of the waste manifests.

d. A description of the sampling and analytical methods used.

e. A chronological summary of closure activities and the cost involved.

f. Tests performed, methods and results.

g. Color photographs of closure activities which document conditions before, during and after closure.

h. A scale drawing of all excavated or decontaminated areas and sample locations.

7. To avoid creating another regulated storage unit during closure, it is recommended that you obtain any necessary permits for waste disposal prior to initiating excavation activities. If it is necessary to store excavated hazardous waste on-site prior to off-site disposal, do so only in containers or tanks for less than ninety (90) days. The permit exemption (35 Ill. Adm. 722.134) only applies to containers and tanks.

8. Under the provisions of 29 CFR 1910 (51 FR 15,654, December 19, 1986), cleanup operations must meet the applicable requirements of OSHA's Hazardous Waste Operations and Emergency Response standard. These requirements include hazard communication, medical surveillance, health and safety programs, air monitoring, decontamination and training. General site workers engaged in activities that expose or potentially expose them to hazardous substances must receive a minimum of 40 hours of safety and health training off site plus a minimum of three days of actual field experience under the direct supervision of a trained experienced supervisor. Managers and supervisors at the cleanup site must have at least an additional eight hours of specialized training on managing hazardous waste operations.

9. If the Agency determines that implementation of this closure plan fails to satisfy the requirements of 35 Ill. Adm. Code 724.211, the Agency reserves the right to amend the closure plan. Revisions of closure plans are subject to the appeal provisions of Section 40 of the Act.

10. Please be advised that the requirements of the Responsible Property Transfer Act (Public Act 85-1228) may apply to your facility due to the management of RCRA Hazardous Waste. In addition, please be advised that if you store, or treat on-site generated hazardous waste is containers or tanks pursuant to 35 Ill. Adm. Code 722.134, those units are subject to the closure requirements incorporated by reference in 35 IAC 722.134.

SECTION III: REPORTING AND NOTIFICATION REQUIREMENTS

The reporting and notification requirements of each section of the RCRA permit are summarized below. This summary is provided to highlight the various reporting and notification requirements of this permit.

Condition	Submittal	Due Date
SECTION I: CONTAINERS		
G(2)	Submit written notification to the Agency of failure	Within thirty days of becoming aware of the failure
G(2)	Submit application for modification of the permit	If necessary, no later than 180 days after failure of the coating
K(1)	Submit certification and report for proposed container storage units	30 days after completing the construction of the container storage area
L(1)	Submit written notification to the Agency of intent to close the container storage area	45 days prior to commencement of closure
L(1)	Submit sampling and analysis plan for review	45 days prior to commence of closure
L(5)	Submit application for modification of permit and post-closure care plan	No later than 30 days after determination that the container storage area cannot be clean closed
L(6)	Update financial assurance to include modification in Conditions I(K)(4) or I(K)(5)	30 days after permit is modified
L(7)	Submit certification for closure of the container storage area	Within 60 days after closure is completed

Condition	Submittal	Due Date
SECTION II: TANK SYSTEMS		
C(3)	Submit written notification to the Agency of failure	Within thirty days of becoming aware of the failure
C(3)	Submit application for modification of the permit	If necessary, no later than 180 days after failure of the coating
D(1)(a)	Submit certification and report for the proposed tanks as required by 35 IAC 724.292 and 724.293	30 days after completing the construction of the tank systems
H(6)(h)	Submit results of tank integrity assessment	60 days after inspection
I(1)	Notify Agency of a leak or spill unless the spill or leak of hazardous waste is less than or equal to one pound and it is immediately contained and cleaned up	24 hours after leak or spill occurs
I(2)	Submit report to the Agency on release and Permittee's response	30 days after leak or spill occurs
I(3)	Submit certification of major repairs	Within seven days from returning tank system to service
L(1)	Submit written notification to the Agency of intent to close tank system(s)	45 days prior to commencement of closure
L(1)	Submit sampling and analysis plan	45 days prior to commencement of closure
L(4)	Submit application for permit modification and post-closure care plan	30 days after determination that a tank system must be closed as a landfill

Condition	Submittal	Due Date
L(5)	Update Financial Assurance for closure or post-closure	30 days after effective date of permit or modification of permit
L(6)	Submit certification of closure of tank system(s)	60 days after closure of tank system(s) is complete
SECTION IV: CORRECTIVE ACTION		
B	Submit a RCRA Facility Investigation (RFI) Phase 1 Workplan	within 6 months after effective date of this permit
SECTION V: STANDARD CONDITIONS		
6	Complete application for new permit	180 days prior to permit expiration
11	Information requested by Agency and copies of records required to be kept by this permit	Submittal date to be determined by Agency
14	Written notification to the Agency of planned physical alterations or additions	15 days prior to planned change
15	Written notification to the Agency of changes which may result in permit noncompliance	Within 15 days of change
16	Application for permit modification indicating permit is to be transferred	At least 90 days prior to transfer date
18	Submission of any information required in a compliance schedule	14 days after each schedule date
19	Report to Agency any non-compliance which may endanger health or environment	

Condition	Submittal	Due Date
	by telephone	24 hours after discovery
	in writing	5 days after discovery
20	Report all other instances of noncompliance	March 1 of each year along with Annual Report
27	Notify the Regional Administrative in writing of expected receipt of hazardous waste from a foreign source	4 weeks prior to receipt of waste
39	Update arrangements with local authorities	At least annually
41	Implementation of Contingency Plan	As needed
	Notify appropriate state and local agencies with designated response roles	As needed
	Notify appropriate local officials	Immediately, if emergency coordinator's assessment indicates evacuation of local area is advisable
	Notify the Agency (217/782-3637) or Illinois ESDA (217/782-7860) if the emergency coordinator determines there has been a release, fire or explosion which could threaten human health or the environment, outside the facility	Immediately after determination made
	Notify Agency and appropriate state and local authorities, in writing that facility is in compliance with 35 Ill. Adm. Code 724.156(h)	Prior to resuming operation in affected areas

Condition	Submittal	Due Date
	Written Report to Agency with details regarding the incident which required implementation of contingency plan	15 days after event
47	Submit annual report required by 35 Ill. Adm. Code 724.175	March 1 of each year
49	Submit Application for permit modification amending closure plan	Within 90 days of discovery of need for modification
50	Written notification to the Agency of closure	45 days prior to beginning closure
54(a)	Adjust closure cost estimate for inflation	Within 60 days prior to anniversary date of the establishment of the financial instrument
54(b)	Revision of closure cost estimate	As needed, within 90 days of discovery of revision
55	Change in financial assurance mechanism for closure	As needed
56	Change in coverage for sudden and non-sudden accidental occurrences	As needed
57	Written notification to the Agency of commencement of voluntary or involuntary bankruptcy proceedings	10 days after commencement of proceeding

ATTACHMENT D: ADDITIONAL SPECIAL CONDITIONS

C(1)	submit closure plan	45 days prior to closure of any hazardous waste management unit

Condition	Submittal	Due Date
F(2)	Notify Emergency Response Teams	Immediately upon implementation of contingency plan
F(3)	Documentation of submittal of required information to Emergency Response entities	within 60 days of the effective date of this permit
F(4)	Documentation of agreements/ arrangements with local units	within 60 days of the effective date of this permit
F(6)	Submit revised contingency plan	within 60 days of the effective date of this permit

SECTION IV
CORRECTIVE ACTION

A. Introduction

In accordance with Section 3004 of RCRA and 35 Ill. Adm. Code 724.201, the Permittee(s) shall institute such corrective action as necessary to protect human health and the environment from all releases of hazardous wastes or constituents, from any of solid waste management unit (SWMU) at its facility in Chicago, Illinois. This shall be accomplished by:

1. Conducting a RCRA Facility Investigation (RFI) to determine whether releases of hazardous wastes or constituents have occurred from any solid waste management unit (SWMU) at its Chicago facility listed in Condition IV.B.1 and any newly identified SWMUs which require assessment pursuant to Condition IV.F, and if so, the nature and extent of the release(s).

2. Based upon the results of the RFI, developing and implementing a Corrective Action Plan which describes the necessary corrective actions which will be taken. The required corrective actions shall be those actions necessary to protect human health and the environment from all releases of hazardous wastes or constituents from any of the SWMUs determined to pose a potential threat to the environment as determined by the RFI required under the terms and conditions of this permit.

B. Conducting The RCRA Facility Investigation

The Permittee(s) must conduct a RCRA Facility Investigation to determine the nature and extent of releases of hazardous wastes or constituents from SWMUs at the subject facility. This RFI shall be carried out in three phases. Each phase will provide for a more detailed evaluation of each Solid Waste Management Unit identified. The requirements for the RFI are provided in Attachment F to the permit.

1. Based upon the results of the RCRA Facility Assessment which was conducted by the Agency for this facility, the SWMUs identified in the table below must be evaluated in the RFI for potential releases to certain environmental media of concern also identified in the table. (Please note that this is <u>not</u> a complete listing of SWMUs at the subject facility.):

Unit	Environmental Media of Concern
Process Sewer System	soil

Unit	Environmental Media of Concern
Outside Drum Storage Area 1	soil
Outside Drum Storage Area 2	soil
Carbon Absorption System	soil
Inorganic Laboratory	soil
Oil/Water Separator	soil
Former 10,000 gallon sludge feed tank	soil
Auxiliary Basin #3	soil
Landfill	soil
Former Temporary Pickle Liquor Basins	soil
Former Pickle Liquor Disposal Sites	soil
Former Permanent Pickle Liquor Basins	soil
Former Oil Basin	soil
Former Lime Basin	soil
Chemical Reduction/Oxidation Pretreatment System	soil
Oil Contaminated Soil Storage Area	soil
13,000 Gallon Concrete Sludge Tank	soil
Tank 1	soil
Tank 2	soil
Tank 3	soil
Tank 4	soil
7,000 Gallon Concrete Receiving Tanks	soil
Truck Unloading Pad	soil

Unit	Environmental Media of Concern
Sludge Dewatering System	soil
Inside Drum Storage Area	soil

2. The Permittee(s) shall submit to the Illinois Environmental Protection Agency's Division of Land Pollution Control (Agency's DLPC) Permit Section, within 120 days after the effective date of this permit, a written RCRA Facility Investigation (RFI) Phase I Workplan. In general, the Phase I RFI Workplan must contain the following:

   a. General information regarding the Clean Harbors facility in Chicago, Illinois.

   b. Information, as it is available, regarding each SWMU identified in Condition IV.B.1 above which (1) characterizes the unit, (2) describes its history of operations, and (3) documents the unit's integrity.

   c. Proposed procedures, including field activities, to determine the absence or presence of releases of hazardous waste or hazardous constituents to the soil from each SWMU which is determined, based on the unit and waste characterization in IV.B.2.b, to have a potential to have released hazardous waste or hazardous constituents to an environmental media.

   More specific requirements regarding what must be contained in the Phase I Workplan are contained in Attachment F to this permit.

3. The Agency will approve, approve with modifications, or disapprove the Phase I Workplan in writing and provide comments regarding the necessary corrections or modifications.

   a. Within 60 days of receipt of such comments, the Permittee(s) must modify the plan or submit a new plan for the Agency's DLPC approval.

   b. Within 30 days of the Agency's DLPC approval of the RFI Phase I Workplan, the Permittee(s) shall begin implementing the Workplan according to the terms and schedule in the Workplan.

   c. Agency action on the Phase I Workplan will be subject to the appeal provisions of Section 39(a) and Section 40(a) of the Act.

4. The Permittee(s) must submit a report documenting the efforts carried out as set forth in the approved RFI Phase I Work Plan in accordance with the schedule established in the approved Workplan. This report must be organized so as to present a comprehensive and coherent description of the sources, nature and extent of soil contamination discovered at each SWMU during the Phase I RFI. The report must also discuss and evaluate the results of the Phase I RFI associated with each SWMU and include conclusions related to the need for additional investigation at each SWMU as part of a Phase II RFI. This report must be prepared in accordance with (1) the Data Management Plan which is to be a part of the RFI Phase I Workplan (see Item III.F of Attachment F to this permit) and (2) any modifications to the Workplan imposed by the Agency as part of its approval of the workplan.

   a. Since the report must include conclusions related to the need for a Phase II investigation, it must contain proposed concentrations which will be used to make this determination. Justification for these proposed values must also be included in the report.

5. Following the submittal of the RFI Phase I report, the Agency's DLPC will review the submitted data and notify the Permittee(s) in writing of the results of the review. This notification will discuss the status of each of the SWMUs evaluated as part of Phase I of the RFI.

   a. If the Agency determines, based upon the data provided within and obtained from the Phase I Workplan for each SWMU investigated, that (1) there is no potential for release from that SWMU to the environmental media of concern <u>and</u> (2) there has been no release of hazardous wastes or constituents to the environmental media of concern from that SWMU, then no further action will be required for that SWMU.

   b. If the Agency determines, based on the data from the Phase I RFI for each SWMU investigated, that (1) there has been a release to any environmental media of concern, (2) there currently is a release to any environmental media of concern, or (3) the data associated with a given SWMU is inconclusive, then the Permittee(s) shall be required to conduct additional investigation of the SWMU as part of Phase II and, if the RFI Phase I investigation indicates contamination extends to groundwater, Phase III of the RFA.

   c. The final letter sent to the facility conveying the results of the review will:

      1. Identify those SWMUs for which no further investigation is needed;

2. Identify which SWMUs which must be further investigated to determine the rate and extent of migration of hazardous waste or hazardous constituents and the concentrations of the hazardous waste or hazardous constituents in the environmental media potentially impacted by the SWMU;

3. Identify, for each SWMU requiring further investigation, the associated environmental media which must be further investigated; and

4. Indicate whether the permittee must perform a Phase II and/or a Phase III RFI Investigation for those SWMUs requiring further investigation. Unless sufficient information is provided to the Agency as a result of additional investigation in the Phase II investigation, units which have the possibility of releasing hazardous waste or hazardous constituents to groundwater must be evaluated as part of Phase III of the RFA.

d. Agency action on the final Phase I RFI report and proposed cleanup objectives will be subject to the appeal provisions of Sections 39(a) and Section 40(a) of the Act.

6. If the Permittee(s) is notified in writing in accordance with Condition IV.B.5.c that any SWMUs identified in Condition IV.B.1 above must be included in Phase II of the RFI, then the Permittee(s) must develop and submit a Phase II RFI Workplan. Phase II of the RFA shall focus on determining the rate and extent of migration of hazardous waste or constituents and the concentrations of the hazardous waste or constituents in the soil potentially impacted by the SWMU. Only the media potentially impacted by each SWMU as identified in the Agency notification set forth in Condition IV.B.5.c above must be investigated. Such a workplan must be submitted no more than 90 days after the facility is notified in writing in accordance with Condition IV.B.5.c above. The requirements for a Phase II of the RFI are contained in Attachment F to the permit.

7. The Agency's DLPC will approve, modify and approve, or disapprove the Phase II workplan in writing and provide comments regarding the required corrections or modifications.

a. Within 60 days of the receipt of such comments, the Permittee(s) must modify the plan or submit a new plan for the Agency's DLPC approval.

b. Within 30 days of the Agency's DLPC approval of the RFI Phase II Workplan, the Permittee(s) shall begin implementing the plan according to the terms and schedule established in the Phase II Workplan.

c. Agency action on the Phase II workplan will be subject to the appeal provisions of Section 39(a) and Section 40(a) of the Act.

8. The Permittee(s) must submit a report documenting the efforts carried out in accordance with the approved RFI Phase II Workplan in accordance with the schedule established with in the Phase II Workplan. This report must be prepared in a manner which is similar to that specified in Condition IV.B.4 above.

a. Should the Permittee(s) wish to propose target soil cleanup objectives for corrective measures, such a proposal must be submitted to the Agency upon submittal of the RFI Phase II report. Such a request must consider distance from the subject SWMU(s) to potential receptors, 35 Ill. Adm. Code 620 groundwater quality standards, and it must provide an assessment of potential threats to human health and the environment in proposing soil, surface water or groundwater target cleanup objectives (i.e., the proposal should include a site and contaminant specific risk assessment which ensures that alternative target cleanup objectives will not allow the groundwater quality standards to be exceeded, or pose a threat to human health and the environment). The Agency will establish cleanup objectives for corrective measures if no objectives are proposed by the Permittee.

9. Following submittal of the RFI Phase II report, the Agency's DLPC will review the data obtained from the RFI Phase II investigation and shall notify the Permittee(s) in writing of the results.

a. If the Agency determines that there is a potential that groundwater has been impacted by a release of hazardous wastes or hazardous constituents from any SWMU evaluated during the Phase II investigation, then the Permittee(s) must conduct Phase III of the RFI for such SWMUs. The purpose of the Phase III investigation of the RFI will be to define the extent of releases, both on-site and off-site, to the groundwater from SWMUs for which the results of the Phase II investigation indicate a release to groundwater. The requirements associated with a Phase III Investigation are contained in Attachment F to this permit.

b. If the Agency's DLPC determines that a RFI Phase III investigation is not required, based on data obtained from the RFI Phase II investigation, the Agency reserves the right to require that corrective measures be conducted for the SWMU(s) of concern to address releases identified through the Phase I and Phase II investigations.

c. The Agency's response to the Phase II report will:

   i. Identify those SWMUs and associated environmental media for which Phase III of the RFI must be conducted; and

   ii. Identify those SWMUs and associated environmental media for which corrective action is required, although no Phase III investigation is required.

d. Agency action on the final RFI Phase II report will be subject to the appeal provisions of Section 39(a) and Section 40(a) of the Act.

10. Within 90 days of notification of the need for a Phase III investigation, the Permittee(s) shall submit a plan for conducting Phase III of the RFI. The Agency will approve, modify and approve, or disapprove and provide comments to the Permittee(s) as to the corrections or modifications needed for the RFI Phase III Workplan.

    a. Within 60 days of receipt of such comments, the Permittee(s) must modify the plan or submit a new plan for the Agency's DLPC approval.

    b. Within 30 days of the Agency approval of the RFI Phase III Workplan, the Permittee(s) shall begin implementing the plan according to the terms and schedule established within the Workplan.

    c. Agency action on the Phase III workplan will be subject to the appeal provisions of Section 39(a) and Section 40(a) of the Act.

11. Within 120 days of receipt of the Agency's response identified in Condition IV.B.9.c, the Permittee(s) shall submit to the Agency a Corrective Action Plan (CAP), in accordance with the requirements outlined in Condition IV.C. below for those SWMUs identified in the response as requiring corrective action that do not need to evaluate as part of the Phase III investigation.

12. The Permittee(s) must submit a report documenting the efforts carried out in accordance with the approved RFA Phase III Workplan in accordance with the schedule set forth in that workplan. This report must be prepared in a manner which is similar to that specified in Condition IV.B.4 above.

13. Following submittal of the RFI Phase III report, the Agency's DLPC will review the data contained in the report and notify the Permittee(s) in writing of the results.

    a. If the Agency determines that there has been a release of hazardous waste or hazardous constituents from a SWMU to the groundwater, then the Permittee(s) must perform corrective action, as necessary, to protect human health and the environment.

    b. If the Agency determines that there (1) has not been a release of hazardous waste or constituents from a SWMU to the groundwater <u>and</u> (2) is no potential for releases of hazardous waste or hazardous constituents from a SWMU to the groundwater, then no corrective action will be required at that SWMU relating to groundwater.

    c. If the Agency determines (1) that there has not been a release of hazardous waste or hazardous constituents from a SWMU to the groundwater and (2) that there is a potential for future releases of hazardous waste or hazardous constituents from a SWMU to the groundwater, then the Agency <u>may</u> require a longer term groundwater monitoring program at any SWMU where substantial soil contamination exists (as determined by the Agency), or at any SWMU which would meet the definition of a land disposal unit.

    d. The Agency's response to the Phase III report will:

        i. Identify those SWMUs investigated as part of Phase III of the RFI from which there has been a release of hazardous waste or hazardous constituents to groundwater that requires corrective action;

        ii. Identify those SWMUs investigated as part of Phase III of the RFI for which no corrective action is required for groundwater at this time; and

        iii. Identify those land-based SWMUs investigated as part of the Phase III RFI for which a longer term groundwater

monitoring program must be established. "Land-based SWMUs" are SWMUs where waste, contaminated soil and/or contaminated groundwater are allowed to remain in-place.

e. Agency action on the Phase III Workplan will be subject to the appeal provisions of Section 39(a) and 40(a) of the Act.

14. If the Agency's notification identified in Condition IV.B.13.d above requires that corrective action be performed for releases of hazardous waste or hazardous constituents to the groundwater from certain SWMUs, then the Permittee(s) must submit a Corrective Action Plan for this release from the SWMU(s) of concern which meets the requirements of Condition IV.C below for review and approval. This plan must be submitted within 120 days of the date that the notification identified in Condition IV.B.13.d is received by the Permittee.

15. If the Agency's notification identified in Condition IV.B.13.d above requires that a longer term groundwater monitoring program be established for certain SWMUs, then the Permittee(s) must submit such a plan within 120 days after receiving this notification. This plan must be developed in accordance with the general procedures set forth in Section III.D.4 of Attachment F. The Agency will approve, modify and approve or disapprove and provide comments to the Permittee(s) as to corrections or modifications needed for the program.

    a. Within sixty (60) days of receipt of such comments, the Permittee(s) must modify the plan or submit a new plan for the Agency's approval.

    b. Within thirty (30) days of the approval of the plan, the Permittee(s) shall begin implementing the plan in accordance with the terms and schedule established in the plan.

    c. Agency action on the groundwater monitoring plan will be subject to the appeal provisions of Section 39(a) and Section 40(a) of the Act.

C. <u>Corrective Action Requirements</u>

If, in accordance with Conditions IV.B.9 and/or IV.B.13, the Agency determines that corrective actions must be taken in response to releases, then the Permittee(s) shall develop a Corrective Action Plan (CAP). This plan must be submitted within 120 days after receipt of the notification from the Agency that corrective actions are necessary to protect human health and the environment from observed releases from releases of solid

waste to the environment. The purpose of the CAP is to develop and evaluate corrective action alternative(s) and evaluate corrective action measure(s) which will satisfy the target cleanup objectives specified by the Agency's DLPC. The proposed corrective actions must be sufficient to protect human health and the environment from the observed release.

The Agency may approve, modify and approve, or disapprove and provide comments to the Permittee(s) as to the corrections or modifications needed for the CAP. Within 60 days of receipt of such comments, the Permittee(s) must modify the CAP or submit a new CAP to the Agency's DLPC staff for Agency approval. The Agency approval of one or more of the corrective measure(s) may consider, at a minimum, performance, reliability, implementability, safety, human health and the environmental impact of the measure(s). The formal approval and incorporation of the selected corrective measure(s) into the Part B permit will be through the Class 2 Permit Modification procedures identified in 35 Ill. Adm. Code 703.282. The Permittee(s) shall begin implementing the selected corrective measure(s) according to the terms and schedule identified in the modified permit.

D. Financial Assurance for Corrective Action

1. The Permittee(s) shall prepare a cost estimate for the completion of any corrective measure(s) required under this permit, in order to provide financial assurance for completion of corrective action, as required under 35 Ill. Adm. Code 724.201(b). Such a cost estimate will be based upon the cost of contamination investigations and assessments for the SWMU(s), and design, construction, operation, inspection, monitoring, and maintenance of the corrective measure(s) to meet the requirements of 35 Ill. Adm. Code 724.201, Attachment F and this permit. This cost estimate must be submitted to the Agency's DLPC and revised according to the following schedule:

Facility Submission	Due Date
Initial Cost Estimate (with the RFI Phase I Workplan)	120 days after the effective date of this permit
Revised Cost Estimate (with the initial submittal of each RFI Report)	Upon written Agency request

2. The Permittee(s) shall demonstrate continuous compliance with 35 Ill. Adm. Code 724.201 by providing documentation of financial assurance using a mechanism specified in 35 Ill. Adm. Code 724.243, in at least the amount of the cost estimate required under Condition IV.D.1 the words "completion of corrective action" shall be substituted for

"closure and/or post-closure", as appropriate in the financial instrument specified in 35 Ill. Adm. Code 724.251. The documentation shall be submitted to the Agency's DLPC within 60 days after the submittal of the initial or revised cost estimates required under Condition IV.D.1. The Agency's DLPC may accept financial assurance for completion of corrective action in combination with another financial mechanism that is acceptable under 35 Ill. Adm. Code 724.246 at its discretion.

E. Future Releases From SWMUs

Whenever the Permittee(s) becomes aware that any SWMU, that was not found to be releasing hazardous waste or constituents during the RFI, or was not addressed under the corrective action requirements of this permit, may have started to release hazardous waste or constituents, the Permittee(s) shall report this information to the Agency's DLPC in writing within thirty (30) days of discovery. Upon the Agency's written request, the Permittee(s) shall determine the nature and extent of the contamination by following the procedures set forth in Conditions IV.B through IV.D, beginning on the date of notification, rather than on the effective date of the permit.

F. Notification Requirements for an Assessment of Newly-Identified Solid Waste Management Unit(s)

1. The Permittee(s) shall notify the Agency's DLPC in writing of any newly-identified SWMU(s) discovered during the course of groundwater monitoring, field investigations, environmental audits, or other means, no later than sixty (60) calendar days after discovery. For the purposes of this permit, "newly-identified SWMUs" shall mean all SWMUs located at the subject facility for which corrective actions have not previously been required by this permit, or which have not been previously listed in the RFA for this facility. The notification shall provide the following information, if available:

   a. The location of the newly-identified SWMU in relation to other SWMUs on a scaled map or drawing;

   b. The type and past and present function of the SWMU;

   c. The general dimensions, capacities, and structural description of the unit (available drawings and specifications provided);

   d. The period during which the unit was operated;

e. The specifics on all materials, including but not limited to, wastes and hazardous constituents, that have been or are being managed at the SWMU, to the extent available; and

f. The results of any relevant available sampling and analysis which may aid in determining whether releases of hazardous wastes or hazardous constituents have occurred or are occurring from the unit.

2. If the submitted information demonstrates a potential for a release of hazardous waste or constituents from the newly identified SWMU, the Agency may request in writing, that the Permittee(s) prepare a Solid Waste Management Unit (SWMU) Assessment Plan and a proposed schedule of implementation and completion of the Plan for any additional SWMU(s) discovered subsequent to the issuance of this Permit.

3. Within 120 calendar days after receipt of an Agency request for a SWMU Assessment Plan, the Permittee(s) shall prepare a SWMU Assessment Plan consistent with the requirements of IV.B through IV.D above. This SWMU Assessment plan must also propose investigations, including field investigations if necessary, to determine the release potential to specific environmental media for the newly-identified SWMU. The SWMU Assessment Plan must demonstrate that the sampling and analysis program, if applicable, is capable of yielding representative samples and must include parameters sufficient to identify migration of hazardous waste and hazardous constituents from the newly-discovered SWMU(s) to the environment.

4. After the Permittee(s) submits the SWMU Assessment Plan, the Agency shall either approve, approve with conditions or disapprove the Plan in writing. If the plan is approved, the Permittee(s) shall begin to implement the Plan within forty-five (45) calendar days of receiving such written notification. If the Plan is disapproved, the Agency shall notify the Permittee(s) in writing of the Plan's deficiencies specify a due date for submittal of a revised plan.

5. The Permittee(s) shall submit a report documenting the results of the approved SWMU Assessment Plan to the Agency in accordance with the schedule in the approved SWMU Assessment Plan. The SWMU Assessment Report shall describe all results obtained from the implementation of the approved SWMU Assessment Plan.

G. <u>Completion of Corrective Action</u>

1. The Permittee(s) shall complete those corrective actions contained in the Corrective Action Plan approved in accordance with

Condition IV.C above. The Permittee(s) may request the Agency to consider corrective action complete at any point during compliance with this permit. The petition should include a demonstration of the following:

a. The Permittee(s) shall demonstrate that there have been no releases of hazardous waste or hazardous constituents to any media from the SWMUs; or

b. The Permittee(s) shall demonstrate that all releases of hazardous waste or hazardous constituents to all media targeted within the RFI for investigation have been remediated to the target cleanup objectives specified within the approved Corrective Measures Plan, and shall also describe how releases will be prevented in the future; or

c. Some combination of the above demonstrations.

Appropriate documentation and certification must accompany such a demonstration.

The Permittee(s) shall be notified in writing if the Agency approves the request that the corrective actions can be considered complete. The notification from the Agency's DLPC to the Permittee(s) may include a release from the financial requirements of Condition F above.

2. A determination of no further action shall not preclude the Agency's DLPC from requiring continued or periodic inspections of the SWMU(s) or continued or periodic monitoring of the specified environmental media when site-specific circumstances indicate that releases of hazardous wastes including constituents are likely to occur, if necessary to protect human health and the environment. Any requirement for long-term groundwater monitoring may only be required at SWMU where substantial soil contamination exists (as determined by the Agency) or at any SWMU which would meet the definition of a land disposal unit.

3. A determination of no further action shall not preclude the Agency from requiring further investigations, studies, or remediation at a later date, if new information or subsequent analysis indicates a release at the facility that is likely to pose a threat to human health of the environment. In such a case, the Agency's DLPC shall initiate a permit modification to rescind the determination no further action.

H. Interim Measures

At any time during the RFI the permittee may initiate interim measures for the purpose of preventing continuing releases and/or mitigating the results of releases and/or mitigating the migration of hazardous wastes or hazardous constituents. It may not be necessary to conduct all phases of the RFI investigation if the Agency's DLPC and the Permittee(s) agree that a problem can be corrected, or a release cleaned up, without additional study and/or without a formal corrective measures study ("CMS").

Prior to implementation of interim measures, the Permittee(s) shall provide the Agency with an Interim Measures Plan for review and approval, which describes in detail the items listed in Attachment F, Section G.1 through G.4. The Agency will approve, approve with conditions, or disapprove the plan within a timeframe agreed to by the Agency and the Permittee. Should the Agency disapprove the plan, the Permittee(s) will be provided with a detailed list of deficiencies in writing by the Agency.

I. Reports and Signatories to Reports

All reports shall be certified in accordance with 35 Ill. Adm. Code 702.126(d) and signed by a person as identified in 35 Ill. Adm. Code 702.126(b).

SECTION V: STANDARD CONDITIONS

GENERAL REQUIREMENTS

1. EFFECT OF PERMIT. The existence of a RCRA permit shall not constitute a defense to a violation of the Act or 35 Ill. Adm. Code Subtitle G, except for development, modification or operation without a permit. Issuance of this permit does not convey property rights or any exclusive privilege. Issuance of this permit does not authorize any injury to persons or property or invasion of other private rights, or infringement of state or local law or regulations. (35 Ill. Adm. Code 702.181)

2. PERMIT ACTIONS. This permit may be modified, reissued or revoked for cause as specified in 35 Ill. Adm. Codes 703.270 through 703.273 and Section 702.186. The filing of a request by the Permittee(s) for a permit modification or revocation, or a notification of planned changes or anticipated noncompliance on the part of the Permittee(s) does not stay the applicability or enforceability of any permit condition. (35 Ill. Adm. Code 702.146)

3. SEVERABILITY. The provisions of this permit are severable, and if any provision of this permit, or the application of any provision of this permit to any circumstance is held invalid, the application of such provision to other circumstances and the remainder of this permit shall not be affected thereby. (35 Ill. Adm. Code 700.107)

4. PERMIT CONDITION CONFLICT. In case of conflict between a special permit condition and a standard condition, the special condition will prevail. (35 Ill. Adm. Code 702.160)

5. DUTY TO COMPLY. The Permittee(s) shall comply with all conditions of this permit except the extent and duration such noncompliance is authorized by an emergency permit. Any permit noncompliance constitutes a violation of the Act and is grounds for an enforcement action; permit revocation or modification; or for denial of a permit renewal application. (35 Ill. Adm. Code 702.141 and 703.242)

6. DUTY TO REAPPLY. If the Permittee(s) wishes to continue an activity allowed by this permit after the expiration date of this permit, the Permittee(s) must apply for a new permit at least 180 days before this permit expires, unless written permission for a later date has been granted by the Agency. (35 Ill. Adm. Codes 702.142 and 703.125)

7. PERMIT EXPIRATION. This permit and all conditions herein will remain in effect beyond the permit's expiration date if the Permittee(s) has submitted a timely and complete application (see 35 Ill. Adm. Code 703.181-703.209) and through no fault of the Permittee(s) the Agency has not issued a new permit as set forth in 35 Ill. Adm. Code 702.125.

8. NEED TO HALT OR REDUCE ACTIVITY NOT A DEFENSE. It shall not be a defense for the Permittee(s) in an enforcement action that it would have been necessary to halt or reduce the permitted activity in order to maintain compliance with the conditions of this permit. (35 Ill. Adm. Code 702.143)

9. DUTY TO MITIGATE. In the event of noncompliance with the permit, the permittee shall take all reasonable steps to minimize releases of hazardous substances to the environment. The Permittee(s) shall carry out such measures as may be necessary to prevent significant adverse impacts on human health or the environment. (35 Ill. Adm. Code 702.144)

10. PROPER OPERATION AND MAINTENANCE. The Permittee(s) shall at all times properly operate and maintain all facilities and systems of treatment and control (and related appurtenances) which are installed or used by the Permittee(s) to achieve compliance with the conditions of this permit. Proper operation and maintenance includes effective performance, adequate funding, adequate operator staffing and training, and adequate laboratory, and process controls, including appropriate quality assurance procedures. This provision requires the operation of back-up or auxiliary facilities or similar systems only when necessary to achieve compliance with the conditions of the permit. (35 Ill. Adm. Code 702.145)

11. DUTY TO PROVIDE INFORMATION. The Permittee(s) shall furnish to the Agency, within a reasonable time, but no later than thirty days, any relevant information which the Agency may request to determine whether cause exists for modifying, revoking and reissuing or terminating this permit, or to determine compliance with this permit. The Permittee(s) shall also furnish to the Agency, upon request, copies of records required to be kept by this permit. (35 Ill. Adm. Code 702.148)

    Furthermore, the Permittee(s) shall provide to the Agency any documentation that is required by the Act or regulations.

12. INSPECTION AND ENTRY. The Permittee(s) shall allow an authorized representative of the Agency, upon the presentation of credentials and other documents as may be required by law, to:

    a. Enter at reasonable times upon the Permittee's premises where a regulated facility or activity is located or conducted, or where records must be kept under the conditions of this permit;

    b. Have access to and copy, at reasonable times, any records that must be kept under the conditions of this permit;

    c. Inspect at reasonable times any facilities, equipment (including monitoring and control equipment), practices, or operations regulated or required under this permit; and

d. Sample or monitor, at reasonable times, for the purposes of assuring permit compliance or as otherwise authorized by the appropriate statute, any substances or parameters at any location. (35 Ill. Adm. Code 702.149)

13. MONITORING AND RECORDS. (35 Ill. Adm. Code 702.150)

a. Samples and measurements taken for the purpose of monitoring shall be representative of the monitored activity. The method used to obtain a representative sample of the waste must be the appropriate method from Appendix A of 35 Ill. Adm. Code 721. Laboratory methods must be those specified in Test Methods for Evaluating Solid Waste: Physical/Chemical Methods, SW-846, latest versions; Methods for Chemical Analysis of Water and Wastes, EPA-600/4-79-020, latest versions; or an equivalent method as specified in the approved Waste Analysis Plan.

b. The Permittee(s) shall retain records of all monitoring information, including all calibration and maintenance records and all original strip chart recordings for continuous monitoring instrumentation, copies of all reports and records required by this permit, and records of all data used to complete the application for this permit for a period of at least 3 years from the date of the sample, measurement, report or application. These periods may be extended by request of the Agency at any time. The permittee shall maintain records from all groundwater monitoring wells and associated groundwater surface elevations, for the active life of the facility, and for disposal facilities for the post-closure care period as well.

c. Records of monitoring information shall include:

i. The date(s), exact place, and time of sampling or measurements;

ii. The individual(s) who performed the sampling or measurements;

iii. The date(s) analyses were performed;

iv. The individual(s) who performed the analyses;

v. The analytical technique(s) or method(s) used; and

vi. The result(s) of such analyses. (35 Ill. Adm. Code 702.150)

14. REPORTING PLANNED CHANGES. The permittee shall give notice to the Agency as soon as possible of any planned physical alterations or additions to the permitted facility. For a new hazardous waste management facility, the permittee shall not commence treatment, storage or disposal of

hazardous waste; and for a facility being modified the permittee shall not treat, store or dispose of hazardous waste in the modified portion of the facility, until:

a. The permittee has submitted to the Agency by certified mail or hand delivery a letter signed by the permittee and a registered professional engineer stating that the facility has been constructed or modified in compliance with the permit; and

b. 1. The Agency has inspected the modified or newly constructed facility and finds it is in compliance with the condition of the permit; or

2. If, within 15 days of the date of submission of the letter in paragraph (a), the permittee has not received notice from the Agency of its intent to inspect, prior inspection is waived and the permittee may commence treatment, storage or disposal of hazardous waste. (35 Ill. Adm. Codes 703.244 and 702.152(a))

15. ANTICIPATED NONCOMPLIANCE. The Permittee(s) shall give advance notice to the Agency of any planned changes in the permitted facility or activity which may result in noncompliance with permit requirements, regulations, or the Act. For a new facility, the permittee shall not treat, store or dispose of hazardous waste; and for a facility being modified, the permittee shall not treat, store or dispose of hazardous waste in the modified portion of the facility, except as provided in Section 703.280, until:

i. The permittee has submitted to the Agency by certified mail or hand delivery a letter signed by the permittee and a registered professional engineer stating that the facility has been constructed or modified in compliance with the permit; and

ii. Either:

a. The Agency has inspected the modified or newly constructed facility and finds it is in compliance with the conditions of the permit; or

b. Within 15 days after the date submission of the letter in section i above, the permittee has not received notice from the Agency of its intent to inspect, the permittee may commence treatment, storage or disposal of hazardous waste.

(35 Ill. Adm. Codes 702.152(b) and 703.247)

16. TRANSFER OF PERMITS. This permit is not transferable to any person except after notice to the Agency. The Agency may require modification of the

permit to change the name of the permittee and incorporate such other requirements as may be necessary under the appropriate Act. (See 35 Ill. Adm. Codes 703.260 and 703.270, in some cases modification is mandatory.) (35 Ill. Adm. Code 702.152(c)) The transferree shall submit any information the Agency shall request. The Agency determines whether the transferree is of sufficient good character.

17. MONITORING REPORTS. Monitoring results shall be reported at the intervals specified in the permit. (35 Ill. Adm. Code 702.152(d))

18. COMPLIANCE SCHEDULES. Reports of compliance or noncompliance with, or any progress reports on, interim and final requirements contained in any compliance schedule of this permit shall be submitted no later than specified in 35 Ill. Adm. Codes 702.162 and 702.152(e).

19. TWENTY-FOUR HOUR REPORTING.

    a. The Permittee(s) shall report to the Agency any noncompliance with the permit, regulations, the Act or any other matter which may endanger human health or the environment. Any such information shall be reported orally within 24 hours from the time the Permittee(s) becomes aware of the following circumstances. This report shall include the following:

        i. Information concerning the release of any hazardous substance, agrichemical or pesticide that may cause harm to public drinking water supplies.

        ii. Information concerning the release or discharge of any hazardous waste or of a fire or explosion at the HWM facility, which could threaten the environment or human health outside the facility.

    b. The description of the occurrence and its cause shall include:

        i. Name, address, and telephone number of the owner or operator;

        ii. Name, address, and telephone number of the facility;

        iii. Date, time, and type of incident;

        iv. Name and quantity of material(s) involved;

        v. The extent of injuries, if any;

        vi. An assessment of actual or potential hazards to the environment and human health outside the facility, where applicable; and

        vii. Estimated quantity and disposition of recovered material that resulted from the incident.

c. A written submission shall also be provided within 5 days of the time the Permittee(s) becomes aware of the circumstances. The written submission shall contain a description of the noncompliance and its cause; the period of noncompliance including exact dates and times and if the noncompliance has not been corrected; the anticipated time it is expected to continue; and steps taken or planned to reduce, eliminate, and prevent recurrence of the noncompliance. The Agency may waive the five day written notice requirement in favor of a written report within fifteen days. (35 Ill. Adm. Codes 702.152(f) and 703.245(b))

20. OTHER NONCOMPLIANCE. The Permittee(s) shall report all instances of noncompliance not otherwise required to be reported under Standard Conditions 17, 18, and 19, at the time monitoring reports, as required by this permit, are submitted. The reports shall contain the information listed in Standard Condition 19. (35 Ill. Adm. Code 702.152(g))

21. OTHER INFORMATION. Where the Permittee(s) becomes aware that it failed to submit any relevant facts in the permit application, or submitted incorrect information in a permit application or in any report to the Agency, the Permittee(s) shall promptly submit such facts or information. (35 Ill. Adm. Code 702.152(h))

22. REPORTING REQUIREMENTS. The following reports required by 35 Ill. Adm. Code 724 shall be submitted in addition to those required by 35 Ill. Adm. Code 702.152 (reporting requirements):

    a. Manifest discrepancy report: if a significant discrepancy in a manifest is discovered, the permittee must attempt to reconcile the discrepancy with the waste generator or transporter. If the discrepancy is not resolved within 15 days after receiving the waste, the permittee must immediately submit to the Agency a letter describing the discrepancy and attempts to reconcile it and a copy of the manifest or shipping paper at issue. (35 Ill. Adm. Code 724.172(b))

    b. Unmanifested waste report: The permittee must submit to the Agency within 15 days of receipt of unmanifested waste an unmanifested waste report on EPA form 8700-13B. (35 Ill. Adm. Code 724.176)

    c. Annual report: an annual report must be submitted covering facility activities during the previous calendar year. (35 Ill. Adm. Code 724.175)

23. SUBMITTAL OF REPORTS OR OTHER INFORMATION. All written reports or other written information required to be submitted by the terms of this permit shall be sent to:

Illinois Environmental Protection Agency
Division of Land Pollution Control #24
Planning and Reporting Section
2200 Churchill Road
Post Office Box 19276
Springfield, Illinois 62794-9276

24. SIGNATORY REQUIREMENT. All permit applications, reports or information submitted to the Agency shall be signed and certified as required by 35 Ill. Adm. Code 702.126 and 702.151.

25. CONFIDENTIAL INFORMATION. Any claim of confidentiality must be asserted in accordance with 35 Ill. Adm. Code 702.103 and 161.

26. DOCUMENTS TO BE MAINTAINED AT FACILITY SITE. The Permittee(s) shall maintain at the facility, until closure is complete, the following documents and amendments, revisions and modifications to these documents:

    a. Waste analysis plan as required by 35 Ill. Adm. Code 724.113(b) and this permit.

    b. Personnel training documents and records as required by 35 Ill. Adm. Code 724.116(d) and this permit.

    c. Contingency plan as required by 35 Ill. Adm. Code 724.153(a) and this permit.

    d. Closure plan as required by 35 Ill. Adm. Code 724.212(a) and this permit.

    e. Cost estimate for facility closure as required by 35 Ill. Adm. Code 724.242(d) and this permit.

    f. Operating record as required by 35 Ill. Adm. Code 724.173 and this permit.

    g. Inspection schedules as required by 35 Ill. Adm. Code 724.115(b) and this permit.

27. WASTE MINIMIZATION. The Permittee(s) shall certify at least annually that the Permittee(s) has a program in place to reduce the volume and toxicity of hazardous waste that he generates to the degree determined by the Permittee(s) to be economically practicable, and the proposed method of treatment, storage, or disposal is that practicable method currently available to the Permittee(s) which minimizes the present and future threat to human health and the environment, in accordance with 35 Ill. Adm. Code 724.173(b)(9).

GENERAL FACILITY STANDARDS

28. NOTICE OF WASTE FROM A FOREIGN SOURCE. The permittee who has arranged to receive hazardous waste from a foreign source must notify the Agency in writing at least four weeks in advance of the date the waste is expected at the facility. (35 Ill. Adm. Code 724.112(a))

29. NOTICE OF WASTE FROM OFF-SITE. The Permittee(s) who receives hazardous waste from an off-site source (except where the Permittee(s) is also the generator), must inform the generator in writing that the permittee has the appropriate permits for, and will accept, the waste the generator is shipping. The Permittee(s) must keep a copy of this written notice as part of the facility operating record. (35 Ill. Adm. Code 724.112(b))

30. GENERAL WASTE ANALYSIS. The Permittee(s) shall comply with the procedures described in the approved waste analysis plan. (35 Ill. Adm. Code 724.113)

31. SECURITY. The Permittee(s) shall comply with the security provisions of 35 Ill. Adm. Code 724.114(b) and (c).

32. GENERAL INSPECTION REQUIREMENTS. The Permittee(s) shall follow the approved inspection schedule. The Permittee(s) shall remedy any deterioration or malfunction discovered by an inspection as required by 35 Ill. Adm. Code 724.115(c). Records of inspections shall be kept at the facility as required by 35 Ill. Adm. Code 724.115(d).

33. PERSONNEL TRAINING. The Permittee(s) shall conduct personnel training as required by 35 Ill. Adm. Code 724.116 and shall maintain training documents and records as required by 35 Ill. Adm. Code 724.116(d) and (e).

34. GENERAL REQUIREMENTS FOR IGNITABLE, REACTIVE, OR INCOMPATIBLE WASTE. The Permittee(s) shall comply with the requirements of 35 Ill. Adm. Code 724.117.

PREPAREDNESS AND PREVENTION

35. DESIGN AND OPERATION OF FACILITY. The Permittee(s) shall maintain and operate the facility to minimize the possibility of fire, explosion, or any unplanned sudden or non-sudden release of hazardous substance, agrichemical, or pesticide to air, soil, or surface water which could threaten human health or the environment. (35 Ill. Adm. Code 724.131) Additionally, the Permittee(s) shall remediate any release of a hazardous substance, agrichemical or pesticide.

36. REQUIRED EQUIPMENT. The Permittee(s) shall equip the facility with the equipment set forth in the approved contingency plan, as required by 35 Ill. Adm. Code 724.132.

37. TESTING AND MAINTENANCE OF EQUIPMENT. The Permittee(s) shall test and maintain the equipment specified in condition 36 as necessary to assure its proper operation in time of emergency. Such testing and maintenance activities are set forth in the approved inspection schedule. (35 Ill. Adm. Code 724.133)

38. ACCESS TO COMMUNICATIONS OR ALARM SYSTEM. The Permittee(s) shall maintain access to the communications or alarm system as required by 35 Ill. Adm. Code 724.134.

39. REQUIRED AISLE SPACE. The Permittee(s) shall maintain aisle space as required by 35 Ill. Adm. Code 724.135 and National Fire Protection Association (NFPA) requirements.

40. ARRANGEMENTS WITH STATE AND LOCAL AUTHORITIES AND EMERGENCY RESPONSE CONTRACTORS. The Permittee(s) shall attempt to make emergency response arrangements with State and local authorities and agreements with State emergency response teams and emergency response contractors and equipment suppliers as required by 35 Ill. Adm. Code 724.137. If State or local officials refuse to enter in preparedness and prevention arrangements with the Permittee, the Permittee(s) must document this refusal in the operating record.

CONTINGENCY PLAN

41. IMPLEMENTATION OF PLAN. The provisions of the contingency plan must be carried out by the Permittee(s) immediately whenever there is a fire, explosion or release of hazardous waste or hazardous waste constituents which could threaten human health or the environment (35 Ill. Adm. Code 724.151(b)). At a minimum, this includes any fire or explosion which occurs in an area where hazardous waste is being managed (treated, stored or disposed) (35 IAC 703.241). Within 15 days of any incident that requires implementation of the contingency plan, the owner or operator must submit a written report to the Agency as required by 35 Ill. Adm. Code 724.156(j).

42. COPIES OF PLAN. A copy of the contingency plan, including any revisions, must be maintained at the facility and submitted to all local police and fire departments, hospitals and state and local emergency response teams as required by 35 Ill. Adm. Code 724.153.

43. AMENDMENTS TO PLAN. The Permittee(s) shall review and immediately amend, if necessary, the contingency plan, as required by 35 Ill. Adm. Code 724.154.

44. EMERGENCY COORDINATOR. A trained emergency coordinator shall be available at all times in case of an emergency as required by 35 Ill. Adm. Code 724.155 and 724.156.

MANIFEST SYSTEM RECORD KEEPING AND REPORTING

45. MANIFEST SYSTEM. The Permittee(s) shall comply with the manifest requirements of 35 Ill. Adm. Code 724.171, 724.172 and 724.176.

46. OPERATING RECORD. The Permittee(s) shall maintain a written operating record at the facility in accordance with 35 Ill. Adm. Code 724.173.

47. ANNUAL REPORT. The Permittee(s) shall prepare and submit an annual report to the Agency prior to March 1st of each year in accordance with the requirements of 35 Ill. Adm. Code 724.175.

CLOSURE

48. PERFORMANCE STANDARD. The Permittee(s) shall close the facility as required by 35 Ill. Adm. Code 724.211 and in accordance with the approved closure plan.

49. AMENDMENT TO CLOSURE PLAN. The Permittee(s) must amend the closure plan whenever there is a change in the expected year of closure or whenever a change in the facility operation plans or facility design affects the closure plan pursuant to 35 Ill. Adm. Code 724.212(c).

50. NOTIFICATION OF CLOSURE. The Permittee(s) shall notify the Agency at least 45 days prior to the date it expects to begin closure. (35 Ill. Adm. Code 724.212(d))

51. TIME ALLOWED FOR CLOSURE. After receiving the final volume of hazardous waste, the Permittee(s) shall treat or remove from the site all hazardous waste and complete closure activities in accordance with the schedule(s) specified in the closure plan. (35 Ill. Adm. Code 724.213)

52. DISPOSAL AND/OR DECONTAMINATION OF EQUIPMENT. When closure is completed, the Permittee(s) shall decontaminate and/or dispose of all facility equipment and structures as required by the approved closure (35 Ill. Adm. Code 724.214) plan.

53. CERTIFICATION OF CLOSURE. When closure is completed, the Permittee(s) shall submit certification to the Agency in accordance with 35 Ill. Adm. Code 724.215 that the facility has been closed as specified by the approved closure plans.

54. COST ESTIMATE FOR FACILITY CLOSURE. The Permittee's original closure cost estimate, prepared in accordance with 35 Ill. Adm. Code 724.242, must be:

a. Adjusted for inflation either 60 days prior to each anniversary of the date on which the first closure cost estimate was prepared or if using the financial test or corporate guarantee, within 30 days after close of the firm's fiscal year.

b. Revised whenever there is a change in the facility's closure plan increasing the cost of closure.

c. Kept on record at the facility and updated. (35 Ill. Adm. Code 724.242)

d. Made immediately available to Agency personnel upon Agency request.

55. FINANCIAL ASSURANCE FOR FACILITY CLOSURE. The Permittee(s) shall demonstrate compliance with 35 Ill. Adm. Code 724.243 by providing documentation of financial assurance, as required by 35 Ill. Adm. Code 724.251, in at least the amount of the cost estimates required by the previous Permit Condition. Changes in financial assurance mechanisms must be approved by the Agency pursuant to 35 Ill. Adm. Code 724.243.

56. LIABILITY REQUIREMENTS. The Permittee(s) shall demonstrate continuous compliance with the requirements of 35 Ill. Adm. Code 724.247 and the documentation requirements of 35 Ill. Adm. Code 724.251.

57. INCAPACITY OF OWNERS OR OPERATORS, GUARANTORS, OR FINANCIAL INSTITUTIONS. The Permittee(s) shall comply with 35 Ill. Adm. Code 724.248 whenever necessary.

LAND DISPOSAL RESTRICTIONS

58. DISPOSAL PROHIBITION. Any waste identified in 35 Ill. Adm. Code Part 728, Subpart C, or any mixture of such a waste with non-restricted wastes, is prohibited from land disposal unless it meets the standards of 35 Ill. Adm. Code Part 728, Subpart D, or unless it meets the requirements for exemptions under Subpart C. "Land disposal" means placement in or on the land and includes, but is not limited to, placement in a landfill, surface impoundment, waste pile, injection well, land treatment facility, or vault intended for disposal.

59. DILUTION PROHIBITION. The Permittee(s) shall not in any way dilute a restricted waste or residual from treatment of a restricted waste as a substitute for adequate treatment in order to achieve compliance with 35 Ill. Adm. Code 728, Subpart D (35 Ill. Adm. Code 728.103).

60. WASTE ANALYSIS.

1. The Permittee(s) must test his waste or extract developed, using the test method identified in Appendix I of 40 CFR Part 268, or use knowledge of the waste, to determine if the waste is restricted from land disposal.

2. For any waste with treatment standards expressed as concentrations in the waste extract, the Permittee(s) must test the treatment residues or an extract of such residues developed using the test method described in Appendix I of 40 CFR Part 268, to assure that the treatment residues or extract meet the applicable treatment standard.

3. If the treatment residues do not meet the treatment standards, or if the Permittee(s) ships any restricted wastes to a different facility, the Permittee(s) shall comply with the requirements applicable to generators in 35 Ill. Adm. Code 728.107 and 728.150(a)(1).

61. STORAGE RESTRICTIONS

1. The Permittee(s) shall not store hazardous wastes restricted from land disposal under 35 Ill. Adm. Code Part 728, Subpart C unless such wastes are stored only in containers or tanks, and are stored solely for the purpose of the accumulation of such quantities as is necessary to facilitate proper recovery, treatment, or disposal, and: (1) each container is clearly marked to identify its contents and the date each period of accumulation begins; (2) each tank is clearly marked to identify its contents, the quantity of each hazardous waste received, and the date each period of accumulation begins. In lieu of marking each tank with the required information, the Permitee may maintain such information as part of the operating record of the facility (35 Ill. Adm. Code 728.150).

2. The Permittee(s) must comply with the operating record requirements of 35 Ill. Adm. Code 724.173.

62. NEW DETERMINATIONS OF PROHIBITED WASTES

Wastes which are prohibited from land disposal under 35 Ill. Adm. Code Part 728, Subpart C, or for which treatment standards have been established under 35 Ill. Adm. Code 728, Subpart D, subsequent to the date of issuance of this permit, shall be subject to the conditions number 58 through 61 above.

63. DEFINITIONS

Within the scope of this permit "days" refers to calendar days unless otherwise specified.

ATTACHMENT A

Wastes Which Can Be Accepted and Hazardous Waste Identification Numbers

0316000051

Hazardous Waste Codes Acceptable for the RCRA Exempt Wastewater Treatment Units

Hazardous Waste No.	Description of Hazardous Waste
A. Characteristically Hazardous Waste	
D001	Solid waste that exhibits the characteristic of ignitability, but is not listed as a hazardous waste (HNO3 (>40%)).
D002	Solid waste that exhibits the characteristic of corrosivity, but is not listed as a hazardous waste.
D003	Solid waste that exhibits the characteristic of reactivity, but is not listed as a hazardous waste.
D004	Solid waste exhibiting the characteristic of TCLP toxicity for arsenic at 5.0 mg/l or more.
D005	Solid waste exhibiting the characteristic of TCLP toxicity for barium at 100 mg/l or more.
D006	Solid waste exhibiting the characteristic of TCLP toxicity for cadmium at 1.0 mg/l or more.
D007	Solid waste exhibiting the characteristic of TCLP toxicity for chromium at 5.0 mg/l or more.
D008	Solid waste exhibiting the characteristic of TCLP toxicity for lead at 5.0 mg/l or more.
D009	Solid waste exhibiting the characteristic of TCLP toxicity for mercury at 0.2 mg/l or more.
D010	Solid waste exhibiting the characteristic of TCLP toxicity for selenium at 1.0 mg/l or more.
D011	Solid waste exhibiting the characteristic of TCLP toxicity for silver at 5.0 mg/l or more.
D018	Solid waste exhibiting the characteristic of TCLP toxicity for benzene at 0.5 mg/l or more.
D019	Solid waste exhibiting the characteristic of TCLP toxicity for carbon tetrachloride at 0.5 mg/l or more.

Hazardous Waste No.	Description of Hazardous Waste
D021	Solid waste exhibiting the characteristic of TCLP toxicity for chlorobenzene at 100.0 mg/l or more.
D022	Solid waste exhibiting the characteristic of TCLP toxicity for chloroform at 6.0 mg/l or more.
D023	Solid waste exhibiting the characteristic of TCLP toxicity for o-cresol at 200.0 mg/l or more.
D024	Solid waste exhibiting the characteristic of TCLP toxicity for m-cresol at 200.0 mg/l or more.
D025	Solid waste exhibiting the characteristic of TCLP toxicity for p-cresol at 200.0 mg/l or more.
D026	Solid waste exhibiting the characteristic of TCLP toxicity for cresol at 200.0 mg/l or more.
D027	Solid waste exhibiting the characteristic of TCLP toxicity for 1,4 dichlorobenzene at 7.5 mg/l or more.
D028	Solid waste exhibiting the characteristic of TCLP toxicity for 1,2 dichloroethane at 0.5 mg/l or more.
D029	Solid waste exhibiting the characteristic of TCLP toxicity for 1,1 dichloroethylene at 0.7 mg/l or more.
D030	Solid waste exhibiting the characteristic of TCLP toxicity for 2,4 dinitrotoluene at 0.13 mg/l or more.
D032	Solid waste exhibiting the characteristic of TCLP toxicity for hexachlorobenzene at 0.13 mg/l or more.
D033	Solid waste exhibiting the characteristic of TCLP toxicity for hexachlorobutadiene at 0.5 mg/l or more.
D034	Solid waste exhibiting the characteristic of TCLP toxicity for hexachloroethane at 3.0 mg/l or more.
D035	Solid waste exhibiting the characteristic of TCLP toxicity for methyl ethyl ketone at 200.0 mg/l or more.

Hazardous Waste No.	Description of Hazardous Waste
D036	Solid waste exhibiting the characteristic of TCLP toxicity for nitrobenzene at 2.0 mg/l or more.
D039	Solid waste exhibiting the characteristic of TCLP toxicity for tetrachloroethylene at 0.7 mg/l or more.
D040	Solid waste exhibiting the characteristic of TCLP toxicity for trichloroethylene at 0.5 mg/l or more.
D041	Solid waste exhibiting the characteristic of TCLP toxicity for 2,4,5 trichlorophenol at 400.0 mg/l or more.
D042	Solid waste exhibiting the characteristic of TCLP toxicity for 2,4,6 trichlorophenol at 2.0 mg/l or more.
D043	Solid waste exhibiting the characteristic of TCLP toxicity for vinyl chloride at 0.2 mg/l or more.

B. Hazardous Wastes from Non-Specific Sources

K062	Spent pickle liquor generated by steel finishing operations of facility within the iron and steel industry (SIC Code 331 and 332, as defined in 35 Ill. Adm. Code 720.110).

Hazardous Waste Codes Acceptable for the Listed
Waste Treatment Process
(Neutralization, Precipitation, Coagulation,
Oxidation, Stripping or Carbon Adsorption)

Hazardous Waste No.	Description of Hazardous Waste
A. Characteristically Hazardous Waste	
D001	Solid waste that exhibits the characteristic of ignitability, but is not listed as a hazardous waste.
D002	Solid waste that exhibits the characteristic of corrosivity, but is not listed as a hazardous waste.

Hazardous Waste No.	Description of Hazardous Waste
D003	Solid waste that exhibits the characteristic of reactivity, but is not listed as a hazardous waste.
D004	Solid waste exhibiting the characteristic of TCLP toxicity for arsenic at 5.0 mg/l or more.
D005	Solid waste exhibiting the characteristic of TCLP toxicity for barium at 100 mg/l or more.
D006	Solid waste exhibiting the characteristic of TCLP toxicity for cadmium at 1.0 mg/l or more.
D007	Solid waste exhibiting the characteristic of TCLP toxicity for chromium at 5.0 mg/l or more.
D008	Solid waste exhibiting the characteristic of TCLP toxicity for lead at 5.0 mg/l or more.
D009	Solid waste exhibiting the characteristic of TCLP toxicity for mercury at 0.2 mg/l or more.
D010	Solid waste exhibiting the characteristic of TCLP toxicity for selenium at 1.0 mg/l or more.
D011	Solid waste exhibiting the characteristic of TCLP toxicity for silver at 5.0 mg/l or more.
D018	Solid waste exhibiting the characteristic of TCLP toxicity for benzene at 0.5 mg/l or more.
D019	Solid waste exhibiting the characteristic of TCLP toxicity for carbon tetrachloride at 0.5 mg/l or more.
D021	Solid waste exhibiting the characteristic of TCLP toxicity for chlorobenzene at 100.0 mg/l or more.
D022	Solid waste exhibiting the characteristic of TCLP toxicity for chloroform at 6.0 mg/l or more.
D023	Solid waste exhibiting the characteristic of TCLP toxicity for o-cresol at 200.0 mg/l or more.
D024	Solid waste exhibiting the characteristic of TCLP toxicity for m-cresol at 200.0 mg/l or more.

Hazardous Waste No.	Description of Hazardous Waste
D025	Solid waste exhibiting the characteristic of TCLP toxicity for p-cresol at 200.0 mg/l or more.
D026	Solid waste exhibiting the characteristic of TCLP toxicity for cresol at 200.0 mg/l or more.
D027	Solid waste exhibiting the characteristic of TCLP toxicity for 1,4 dichlorobenzene at 7.5 mg/l or more.
D028	Solid waste exhibiting the characteristic of TCLP toxicity for 1,2 dichloroethane at 0.5 mg/l or more.
D029	Solid waste exhibiting the characteristic of TCLP toxicity for 1,1 dichloroethylene at 0.7 mg/l or more.
D030	Solid waste exhibiting the characteristic of TCLP toxicity for 2,4 dinitrotoluene at 0.13 mg/l or more.
D032	Solid waste exhibiting the characteristic of TCLP toxicity for hexachlorobenzene at 0.13 mg/l or more.
D033	Solid waste exhibiting the characteristic of TCLP toxicity for hexachlorobutadiene at 0.5 mg/l or more.
D034	Solid waste exhibiting the characteristic of TCLP toxicity for hexachloroethane at 3.0 mg/l or more.
D035	Solid waste exhibiting the characteristic of TCLP toxicity for methyl ethyl ketone at 200.0 mg/l or more.
D036	Solid waste exhibiting the characteristic of TCLP toxicity for nitrobenzene at 2.0 mg/l or more.
D037	Solid waste exhibiting the characteristic of TCLP toxicity for pentachlorophenol at 100 mg/l or more.
D038	Solid waste exhibiting the characteristic of TCLP toxicity for pyridine at 5.0 mg/l or more.
D039	Solid waste exhibiting the characteristic of TCLP toxicity for tetrachloroethylene at 0.7 mg/l or more.
D040	Solid waste exhibiting the characteristic of TCLP toxicity for trichloroethylene at 0.5 mg/l or more.

Hazardous Waste No.	Description of Hazardous Waste
D041	Solid waste exhibiting the characteristic of TCLP toxicity for 2,4,5 trichlorophenol at 400.0 mg/l or more.
D042	Solid waste exhibiting the characteristic of TCLP toxicity for 2,4,6 trichlorophenol at 2.0 mg/l or more.
D043	Solid waste exhibiting the characteristic of TCLP toxicity for vinyl chloride at 0.2 mg/l or more.

B. Hazardous Wastes From Non-Specific Sources

F001	The following spent halogenated solvents used in degreasing: tetrachloroethylene, trichloroethylene, methylene chloride, 1,1,1-trichloroethane, carbon tetrachloride, chlorinated fluorocarbons, spent solvent mixtures/blends used in degreasing, and still bottom from the recovery of these spent solvents and spent solvent mixtures.
F002	The following spent halogenated solvents: tetrachloroethylene, methylene chloride, trichloroethylene, 1,1,1-trichloroethane, chlorobenzene, 1,1,2-trichloro-1,2,2-trifluoroethane, orthodichlorobenzene, trichlorofluoromethane, 1,1,2-trichloroethane, spent solvent mixtures and blends, and the still bottoms from the recovery of these spent solvents and spent solvent mixtures.
F003	The following spent non-halogenated solvents: xylene, acetone, ethyl acetate, ethyl benzene, ethyl ether, methyl isobutyl ketone, n-buryl alcohol, cyclohexanone, methanol, spent solvent mixtures and blends, and the still bottoms from the recovery of these spent solvents and spent solvent mixtures.
F004	The following spent non-halogenated solvents: cresols and cresylic acid, nitrobenzene, spent solvent mixtures and blends, and still bottoms from the recovery of these spent solvents and spent solvent mixtures.
F005	The following spent non-halogenated solvents: toluene, methyl ethyl ketone, carbon disulfide, isobutanol, pyridine, benzene, 2-ethoxyethanol, 2-nitropropane, spent solvent mixtures and blends, and the still bottoms from the recovery of these spent solvents and spent solvent mixtures.
F006	Wastewater treatment sludges from electroplating operations.

Hazardous Waste No.	Description of Hazardous Waste
F007	Spent cyanide plating baths from electroplating operations.
F008	Plating bath residues from the bottom of plating baths from electroplating operations where cyanides are used in the process.
F009	Spent stripping and cleaning bath solutions from electroplating operations where cyanides are used in the process.
F010	Quenching bath residues from oil baths from metal heat treating operations where cyanides are used in the process.
F011	Spent cyanide solutions from salt bath pot cleaning from metal heat treating operations.
F012	Quenching wastewater treatment sludges from metal heat treating operations where cyanides are used in the process.
F019	Wastewater treatment sludges from the chemical conversion coating of aluminum except from zirconium phosphating in aluminum can washing when such phosphating is an exclusive.
F039	Multi-Source leachate.

C. Hazardous Wastes From Specific Sources

K002	Wastewater treatment sludge from the production of chrome yellow and orange pigments.
K003	Wastewater treatment sludge from the production of molybdate orange pigments.
K004	Wastewater treatment sludge from the production of zinc yellow pigments.
K005	Wastewater treatment sludge from the production of chrome green pigments.
K006	Wastewater treatment sludge from the production of chrome oxide green pigments (anhydrous and hydrated).
K007	Wastewater treatment sludge from the production of iron blue pigments.
K008	Oven residue from the production of chrome oxide green pigments.

Hazardous Waste No.	Description of Hazardous Waste
K046	Wastewater treatment sludges from the manufacturing, formulation and loading of lead based initiating compounds.
K048	Dissolved air flotation (DAF) float from the petroleum refining industry.
K052	Tank bottoms (leaded) from the petroleum refining industry.
K060	Ammonia still lime sludge from coking operations.
K061	Emission control dust/sludge from the primary production of steel in electric furnaces.
K062	Spent pickle liquor generated by steel finishing operations of facilities within the iron and steel industry (SIC Codes 331 and 332) (as defined in 35 Ill. Adm. Code 720.110).
K069	Emission control dust/sludge from secondary lead smelting.
K086	Solvent washes and sludges, caustic washes and sludges, or water washes and sludges from cleaning tubs and equipment used in the formulation of ink from pigments, driers, soaps and stabilizers containing chromium and lead.
K087	Decanter tank tar sludge from coking operations.
K100	Waste leaching solution from acid leaching of emission control dust/sludge from secondary lead smelting.

Hazardous Waste Codes Acceptable for Stabilization/Fixation

Hazardous Waste No.	Description of Hazardous Waste
A. Characteristically Hazardous Waste	
D004	Solid waste exhibiting the characteristic of TCLP toxicity for arsenic at 5.0 mg/l or more.
D005	Solid waste exhibiting the characteristic of TCLP toxicity for barium at 100 mg/l or more.
D006	Solid waste exhibiting the characteristic of TCLP toxicity for cadmium at 1.0 mg/l or more.

Hazardous Waste No.	Description of Hazardous Waste
D007	Solid waste exhibiting the characteristic of TCLP toxicity for chromium at 5.0 mg/l or more.
D008	Solid waste exhibiting the characteristic of TCLP toxicity for lead at 5.0 mg/l or more.
D009	Solid waste exhibiting the characteristic of TCLP toxicity for mercury at 0.2 mg/l or more.
D010	Solid waste exhibiting the characteristic of TCLP toxicity for selenium at 1.0 mg/l or more.
D011	Solid waste exhibiting the characteristic of TCLP toxicity for silver at 5.0 mg/l or more.

B. Hazardous Waste From Specific Sources

K062	Spent pickle liquor generated by steel finishing operations of facilities within the iron and steel industry (SIC Codes 331 and 332) (as defined in 35 Ill. Adm. Code 720.110).

C. Hazardous Waste From Non-Specific Sources

F006(1)	Wastewater treatment sludges from electroplating operations except from the following processes: (1) sulfuric acid anodizing of aluminum; (2) tin plating on carbon steel; (3) zinc plating (segregated basis) on carbon steel; (4) aluminum or zinc-aluminum plating on carbon steel; (5) cleaning/stripping associated with tin, zinc and aluminum plating on carbon steel; and (6) chemical etching and milling of aluminum.
F007(1)	Spent cyanide plating bath solutions from electroplating operations.
F008(1)	Plating bath residues from the bottom of plating baths from electroplating operations where cyanides are used in the process.
F009(1)	Spent stripping and cleaning bath solutions from electroplating operations where cyanides are used in the process.
F010(1)	Quenching bath residues from oil baths from metal heat treating operations where cyanides are used in the process.

Hazardous Waste No.	Description of Hazardous Waste
F011(1)	Spent cyanide solutions from salt bath pot cleaning from metal heat treating operations.
F012(1)	Quenching wastewater treatment sludges from metal heat treating operations where cyanides are used in the process.
F019(1)	Wastewater treatment sludges from the chemical conversion coating of aluminum.

(1) The facility cannot stabilize wastes containing parameters above land ban restrictions whose BDAT as identified in the Federal Register is not based on stabilization (i.e., cyanide).

Hazardous Waste Codes Acceptable for Fuel Blending

Hazardous Waste No.	Description of Hazardous Waste
A. Characteristically Hazardous Waste	
D001	Solid waste that exhibits the characteristic of ignitability, but is not listed as a hazardous waste.
D002	Solid waste that exhibits the characteristic of corrosivity, but is not listed as a hazardous waste.
D003	Solid waste that exhibits the characteristic of reactivity, but is not listed as a hazardous waste.
D004	Solid waste exhibiting the characteristic of TCLP toxicity for arsenic at 5.0 mg/l or more.
D005	Solid waste exhibiting the characteristic of TCLP toxicity for barium at 100 mg/l or more.
D006	Solid waste exhibiting the characteristic of TCLP toxicity for cadmium at 1.0 mg/l or more.
D007	Solid waste exhibiting the characteristic of TCLP toxicity for chromium at 5.0 mg/l or more.
D008	Solid waste exhibiting the characteristic of TCLP toxicity for lead at 5.0 mg/l or more.

Hazardous Waste No.	Description of Hazardous Waste
D009	Solid waste exhibiting the characteristic of TCLP toxicity for mercury at 0.2 mg/l or more.
D010	Solid waste exhibiting the characteristic of TCLP toxicity for selenium at 1.0 mg/l or more.
D011	Solid waste exhibiting the characteristic of TCLP toxicity for silver at 5.0 mg/l or more.
D018	Solid waste exhibiting the characteristic of TCLP toxicity for benzene at 0.5 mg/l or more.
D019	Solid waste exhibiting the characteristic of TCLP toxicity for carbon tetrachloride at 0.5 mg/l or more.
D021	Solid waste exhibiting the characteristic of TCLP toxicity for chlorobenzene at 100.0 mg/l or more.
D022	Solid waste exhibiting the characteristic of TCLP toxicity for chloroform at 6.0 mg/l or more.
D023	Solid waste exhibiting the characteristic of TCLP toxicity for o-cresol at 200.0 mg/l or more.
D024	Solid waste exhibiting the characteristic of TCLP toxicity for m-cresol at 200.0 mg/l or more.
D025	Solid waste exhibiting the characteristic of TCLP toxicity for p-cresol at 200.0 mg/l or more.
D026	Solid waste exhibiting the characteristic of TCLP toxicity for cresol at 200.0 mg/l or more.
D027	Solid waste exhibiting the characteristic of TCLP toxicity for 1,4 dichlorobenzene at 7.5 mg/l or more.
D028	Solid waste exhibiting the characteristic of TCLP toxicity for 1,2 dichloroethane at 0.5 mg/l or more.
D029	Solid waste exhibiting the characteristic of TCLP toxicity for 1,1 dichloroethylene at 0.7 mg/l or more.
D030	Solid waste exhibiting the characteristic of TCLP toxicity for 2,4 dinitrotoluene at 0.13 mg/l or more.

Hazardous Waste No.	Description of Hazardous Waste
D032	Solid waste exhibiting the characteristic of TCLP toxicity for hexachlorobenzene at 0.13 mg/l or more.
D033	Solid waste exhibiting the characteristic of TCLP toxicity for hexachlorobutadiene at 0.5 mg/l or more.
D034	Solid waste exhibiting the characteristic of TCLP toxicity for hexachloroethane at 3.0 mg/l or more.
D035	Solid waste exhibiting the characteristic of TCLP toxicity for methyl ethyl ketone at 200.0 mg/l or more.
D036	Solid waste exhibiting the characteristic of TCLP toxicity for nitrobenzene at 2.0 mg/l or more.
D037	Solid waste exhibiting the characteristic of TCLP toxicity for pentachlorophenol at 100.0 mg/l or more.
D038	Solid waste exhibiting the characteristic of TCLP toxicity for pyridine at 5.0 mg/l or more.
D039	Solid waste exhibiting the characteristic of TCLP toxicity for tetrachloroethylene at 0.7 mg/l or more.
D040	Solid waste exhibiting the characteristic of TCLP toxicity for trichloroethylene at 0.5 mg/l or more.
D041	Solid waste exhibiting the characteristic of TCLP toxicity for 2,4,5 trichlorophenol at 400.0 mg/l or more.
D042	Solid waste exhibiting the characteristic of TCLP toxicity for 2,4,6 trichlorophenol at 2.0 mg/l or more.
D043	Solid waste exhibiting the characteristic of TCLP toxicity for vinyl chloride at 0.2 mg/l or more.

B. Hazardous Wastes From Non-Specific Sources

F001 The following spent halogenated solvents used in degreasing: tetrachloroethylene, trichloroethylene, methylene chloride, 1,1,1-trichloroethane, carbon tetrachloride, chlorinated fluorocarbons, spent solvent mixtures/blends used in degreasing, and still bottom from the recovery of these spent solvents and spent solvent mixtures.

Hazardous Waste No.	Description of Hazardous Waste
F002	The following spent halogenated solvents: tetrachloroethylene, methylene chloride, trichloroethylene, 1,1,1-trichloroethane, chlorobenzene, 1,1,2-trichloro-1,2,2-trifluoroethane, orthodichlorobenzene, trichlorofluoromethane, 1,1,2-trichloroethane, spent solvent mixtures and blends, and the still bottoms from the recovery of these spent solvents and spent solvent mixtures.
F003	The following spent non-halogenated solvents: xylene, acetone, ethyl acetate, ethyl benzene, ethyl ether, methyl isobutyl ketone, n-buryl alcohol, cyclohexanone, methanol, spent solvent mixtures and blends, and the still bottoms from the recovery of these spent solvents and spent solvent mixtures.
F004	The following spent non-halogenated solvents: cresols and cresylic acid, nitrobenzene, spent solvent mixtures and blends, and still bottoms from the recovery of these spent solvents and spent solvent mixtures.
F005	The following spent non-halogenated solvents: toluene, methyl ethyl ketone, carbon disulfide, isobutanol, pyridine, benzene, 2-ethoxyethanol, 2-nitropropane, spent solvent mixtures and blends, and the still bottoms from the recovery of these spent solvents and spent solvent mixtures.

C. Hazardous Wastes from Specific Sources

K001	Bottom sediment sludge from the treatment of wastewater from wood preserving processes that use creosote and/or pentachlorophenol.
K009	Distillation bottoms from the production of acetaldehyde from ethylene.
K010	Distillation side cuts from the production of acetaldehyde from ethylene.
K011	Bottom stream from the wastewater stripper in the production of acrylonitrile.
K013	Bottom stream from the acetonitrile column in the production of acrylonitrile.
K014	Bottoms from the acetonitrile purification column in the production of acrylonitrile.

Hazardous Waste No.	Description of Hazardous Waste
K019	Heavy ends from the distillation of ethylene dichloride in ethylene dichloride production.
K022	Distillation bottom tars from the production of phenol/acetone from cumene.
K023	Distillation light ends from the production of phthalic anhydride from naphthalene.
K024	Distillation bottoms from the production of phthalic anhydride from naphthalene.
K028	Spent catalyst from the hydrochlorinator reactor in the production of 1,1,1-trichloroethane.
K029	Waste from the product stream stripper in the production of 1,1,1-trichloroethane.
K048	Dissolved air flotation (DAF) float from the petroleum refining industry.
K049	Slop oil emulsion solids from the petroleum refining industry.
K050	Heat exchanger bundle cleaning sludge from the petroleum refining industry.
K051	API separator sludge from the petroleum refining industry.
K052	Tank bottoms (leaded) from the petroleum refining industry.
K083	Distillation bottoms from aniline production.
K085	Distillation or fractionation column bottoms from the production of chlorobenzenes.
K086	Solvent washes and sludges, caustic washes and sludges, or water washes and sludges from cleaning tubs and equipment used in the formulation of ink from pigments, driers, soaps and stabilizers containing chromium and lead.
K087	Decanter tank tar sludge from coking operations.
K093	Distillation light ends from the production of phthalic anhydride from ortho-xylene.

Hazardous Waste No.	Description of Hazardous Waste
K094	Distillation bottoms from the production of phthalic anhydride from ortho-xylene.
K095	Distillation bottoms from the production of 1,1,1-trichloroethane.
K096	Heavy ends from the heavy ends column from the production of 1,1,1-trichloroethane.

Hazardous Waste No.	Description of Hazardous Waste
Commercial Chemical Products	
U001	Acetaldehyde
U003	Acetonitrile
U004	Acetophenone
U007	Acrylamide
U017	Benzyl Chloride
U019	Benzene
U025	Dichloroethyl ether
U030	4-Bromophenyl phenyl ether
U034	Chloral
U037	Chlorobenzene
U039	p-Chloro-m-cresol
U044	Chloroform
U045	Chloromethane, (Methyl Chloride)
U046	Chloromethyl methyl ether
U048	O-Chlorophenol
U051	Creosote
U052	Cresol (Cresylic acid)
U055	Cumene
U056	Cyclohexane
U057	Cyclohexanone
U069	Dibutyl phthalate
U070	o-Dichlorobenzene
U071	m-Dichlorobenzene
U072	p-Dichlorobenzene
U074	1,4-Dichloro-2-butene
U075	Dichlorodifluromethane
U076	Ethane, 1,1-Dichloro-
U077	Ethylene Dichloride
U078	1,1-Dichloroethylene

Hazardous Waste No.	Description of Hazardous Waste
U080	Methane, Dichloro-
U081	2,4-Dichlorophenol
U082	2,6-Dichlorophenol
U083	Propane, 1,1-Dichloro
U089	Diethylstilbestrol
U090	Dihydrosafrole
U092	Dimethylamine (I)
U101	2,4-Dimethylphenol
U112	Ethyl acetate (I)
U113	Ethyl acrylate (I)
U117	Ethyl ether
U118	Ethyl methacrylate
U120	Fluoranthene
U121	Trichlorofluoromethane
U122	Formaldehyde
U123	Formic acid
U124	Furan
U125	Furfural (I)
U130	Hexachlorocyclopentadiene
U132	Hexachlorophene
U140	Isobutyl alcohol
U153	Methanethiol
U154	Methanol
U159	Methyl ethyl ketone (MEK)
U161	Methyl isobutyl ketone
U162	Methyl methacrylate
U163	N-Methyl-N'-Nitro-N-Nitroso-Guanidine
U165	Naphthalene
U166	1,4-Naphthoquinone
U169	Nitrobenzene (I,T)
U170	p-Nitrophenol
U172	N-Nitrosodi-n-butylamine
U173	N-Nitrosodiethanolamine
U183	Pentachlorobenzene
U184	Pentachloroethane
U186	1,3-Pentadiene
U187	Phenacetin
U190	Phthalic anhydride
U191	2-Picoline
U197	p-Benzoquinone
U203	Safrole
U208	1,1,1,2-Tetrachloroethane
U209	1,1,2,2-Tetrachloroethane
U210	Tetrachloroethylene

Hazardous Waste No.	Description of Hazardous Waste
U211	Carbon Tetrachloride
U213	Tetrahydrofuran
U220	Toluene
U223	Toluene diisocyanate
U226	1,1,1-Trichloroethane
U227	1,1,2-Trichloroethane
U228	Trichloroethylene
U239	Xylene

Hazardous Waste Codes Acceptable for Storage and Transfer

Hazardous Waste No.	Description of Hazardous Waste
A. Characteristically Hazardous Waste	
D001	Solid waste that exhibits the characteristic of ignitability, but is not listed as a hazardous waste.
D002	Solid waste that exhibits the characteristic of corrosivity, but is not listed as a hazardous waste.
D003	Solid waste that exhibits the characteristic of reactivity, but is not listed as a hazardous waste.
D004	Solid waste exhibiting the characteristic of TCLP toxicity for arsenic at 5.0 mg/l or more.
D005	Solid waste exhibiting the characteristic of TCLP toxicity for barium at 100 mg/l or more.
D006	Solid waste exhibiting the characteristic of TCLP toxicity for cadmium at 1.0 mg/l or more.
D007	Solid waste exhibiting the characteristic of TCLP toxicity for chromium at 5.0 mg/l or more.
D008	Solid waste exhibiting the characteristic of TCLP toxicity for lead at 5.0 mg/l or more.

Hazardous Waste No.	Description of Hazardous Waste
D009	Solid waste exhibiting the characteristic of TCLP toxicity for mercury at 0.2 mg/l or more.
D010	Solid waste exhibiting the characteristic of TCLP toxicity for selenium at 1.0 mg/l or more.
D011	Solid waste exhibiting the characteristic of TCLP toxicity for silver at 5.0 mg/l or more.
D012	Solid waste exhibiting the characteristic of TCLP Toxicity for Endrin at 0.02 mg/l or more.
D013	Solid Waste exhibiting the characteristic of TCLP Toxicity for Lindane at 0.4 mg/l or more.
D014	Solid Waste exhibiting the characteristic of TCLP Toxicity for Methoxychlor at 10.0 mg/l or more.
D015	Solid waste exhibiting the characteristic of TCLP Toxicity for Toxaphene at 0.5 mg/l or more.
D016	Solid waste exhibiting the characteristic of TCLP toxicity for 2,4-D at 10.0 mg/l or more.
D017	Solid waste exhibiting the characteristic of TCLP Toxicity for 2,4,5-TP (Silvex) at 1.0 mg/l or more.
D018	Solid waste exhibiting the characteristic of TCLP toxicity for benzene at 0.5 mg/l or more.
D019	Solid waste exhibiting the characteristic of TCLP toxicity for carbon tetrachloride at 0.5 mg/l or more.
D020	Solid waste exhibiting the characteristic of TCLP Toxicity for chlordane at 0.03 mg/l or more.
D021	Solid waste exhibiting the characteristic of TCLP toxicity for chlorobenzene at 100.0 mg/l or more.
D022	Solid waste exhibiting the characteristic of TCLP toxicity for chloroform at 6.0 mg/l or more.
D023	Solid waste exhibiting the characteristic of TCLP toxicity for o-cresol at 200.0 mg/l or more.

Hazardous Waste No.	Description of Hazardous Waste
D024	Solid waste exhibiting the characteristic of TCLP toxicity for m-cresol at 200.0 mg/l or more.
D025	Solid waste exhibiting the characteristic of TCLP toxicity for p-cresol at 200.0 mg/l or more.
D026	Solid waste exhibiting the characteristic of TCLP toxicity for cresol at 200.0 mg/l or more.
D027	Solid waste exhibiting the characteristic of TCLP toxicity for 1,4 dichlorobenzene at 7.5 mg/l or more.
D028	Solid waste exhibiting the characteristic of TCLP toxicity for 1,2 dichloroethane at 0.5 mg/l or more.
D029	Solid waste exhibiting the characteristic of TCLP toxicity for 1,1 dichloroethylene at 0.7 mg/l or more.
D030	Solid waste exhibiting the characteristic of TCLP toxicity for 2,4 dinitrotoluene at 0.13 mg/l or more.
D031	Solid waste exhibiting the characteristic of TCLP Toxicity for heptachlor (and its epoxide) at 0.008 mg/l or more.
D032	Solid waste exhibiting the characteristic of TCLP toxicity for hexachlorobenzene at 0.13 mg/l or more.
D033	Solid waste exhibiting the characteristic of TCLP toxicity for hexachlorobutadiene at 0.5 mg/l or more.
D034	Solid waste exhibiting the characteristic of TCLP toxicity for hexachloroethane at 3.0 mg/l or more.
D035	Solid waste exhibiting the characteristic of TCLP toxicity for methyl ethyl ketone at 200.0 mg/l or more.
D036	Solid waste exhibiting the characteristic of TCLP toxicity for nitrobenzene at 2.0 mg/l or more.
D037	Solid waste exhibiting the characteristic of TCLP toxicity for pentachlorophenol at 100.0 mg/l or more.
D038	Solid waste exhibiting the characteristic of TCLP toxicity for pyridine at 5.0 mg/l or more.

Hazardous Waste No.	Description of Hazardous Waste
D039	Solid waste exhibiting the characteristic of TCLP toxicity for tetrachloroethylene at 0.7 mg/l or more.
D040	Solid waste exhibiting the characteristic of TCLP toxicity for trichloroethylene at 0.5 mg/l or more.
D041	Solid waste exhibiting the characteristic of TCLP toxicity for 2,4,5 trichlorophenol at 400.0 mg/l or more.
D042	Solid waste exhibiting the characteristic of TCLP toxicity for 2,4,6 trichlorophenol at 2.0 mg/l or more.
D043	Solid waste exhibiting the characteristic of TCLP toxicity for vinyl chloride at 0.2 mg/l or more.

Hazardous Waste No.	Description of Hazardous Waste
B. Hazardous Wastes From Non-Specific Sources	
F001	The following spent halogenated solvents used in degreasing tetrachloroethylene, trichloroethylene, methylene chloride, 1,1,1-trichloroethane, carbon tetrachloride, and chlorinated fluorocarbons; all spent solvent mixtures and blends used in degreasing containing, before use, a total of ten percent or more (by volume) of one or more of the above halogenated solvents or those solvents listed in F002, F004 or F005; and still bottoms from the recovery of these spent solvents and spent solvent mixtures.
F002	The following spent halogenated solvents: tetrachloroethylene, methylene chloride, trichloroethylene, 1,1,1-trichloroethane, chlorobenzene, 1,1,2-trichloro-1,2,2-trifluoroethane, orthodichlorobenzene, trichlorofluoromethane; and 1,1,2-trichloroethane; all spent solvent mixtures and blends containing, before use, a total of ten percent or more (by volume) of one or more of the above halogenated solvents or those solvents listed in F001, F004, or F005; and still bottoms from the recovery of these spent solvents and spent solvent mixtures.

Hazardous Waste No.	Description of Hazardous Waste
F003	The following spent non-halogenated solvents: xylene, acetone, ethylacetate, ethyl benzene, ethyl ether, methyl isobutyl ketone, n-butyl alcohol, cyclohexanone, and methanol; all spent solvent mixtures and blends containing, before use, only the above spent non-halogenated solvents; and all spent solvent mixtures and blends containing, before use, one or more of the above non-halogenated solvents and a total of ten percent or more (by volume) of one or more of those solvents listed in F001, F002, F004 or F005; and still bottoms from the recovery of these spent solvents and spent solvent mixtures.
F004	The following spent non-halogenated solvents: cresols and cresylic acid, and nitrobenzene; all spent solvent mixtures and blends containing, before use, a total of ten percent or more (by volume) of one or more of the above non-halogenated solvents or those solvents listed in F001, F002 or F005; and still bottoms from the recovery of these spent solvents and spent solvent mixtures.
F005	The following spent non-halogenated solvents: toluene, methyl ethylketone, carbon disulfide, isobutanol, pyridine, benzene, 2-ethoxyethanol and 2-nitropropane; all spent solvent mixtures and blends, containing, before use, a total of ten percent or more (by volume) of one or more of the above non-halogenated solvents or those solvents listed in F001, F002 or F004; and still bottoms from the recovery of these spent solvents and spent solvent mixtures.
F006	Wastewater treatment sludges from electroplating operations except from the following processes: (1) sulfuric acid anodizing of aluminum; (2) tin plating on carbon steel; (3) zinc plating (segregated basis) on carbon steel; (4) aluminum or zinc-aluminum plating on carbon steel; (5) cleaning/stripping associated with tin, zinc and aluminum plating on carbon steel; and (6) chemical etching and milling of aluminum.
F007	Spent cyanide plating bath solutions from electroplating operations.
F008	Plating bath residues from the bottom of plating baths from electroplating operations where cyanides are used in the process.
F009	Spent stripping and cleaning bath solutions from electroplating operations where cyanides are used in the process.
F010	Quenching bath residues from oil baths from metal heat treating operations where cyanides are used in the process.

Hazardous Waste No.	Description of Hazardous Waste
F011	Spent cyanide solutions from salt bath pot cleaning from metal heat treating operations.
F012	Quenching wastewater treatment sludges from metal heat treating operations where cyanides are used in the process.
F019	Wastewater treatment sludges from the chemical conversion coating of aluminum.
F020	Wastes (except wastewater and spent carbon from hydrogen chloride purification) from the production or manufacturing use (as a reactant, chemical intermediate, or component in a formulating process) of tri-, or tetrachlorphenol, or of intermediates used to produce their pesticide derivatives. (This listing does not include wastes from the production of Hexachlorophene from highly purified 2, 4, 5-trichlorophenol.)
F021	Wastes (except wastewater and spent carbon from hydrogen chloride purification) from the production or manufacturing use (as a reactant, chemical intermediate or component in a formulating process) of pentachlorophenol, or of intermediates used to produce its derivatives.
F022	Wastes (except wastewater and spent carbon from hydrogen chloride purification) from the manufacturing use (as a reactant, chemical intermediate, or component in a formulating process) of tetra-, penta-, or hexachlorobenzenes under alkaline conditions.
F023	Wastes (except wastewater and spent carbon from hydrogen chloride purification) from the production of materials on equipment previously used for the production or manufacturing use (as a reactant, chemical intermediate or component in a formulating process) of tri- and tetrachlorophenols. (This listing does not include wastes from equipment used only for the production or use of hexachlorophene from highly purified 2,4,5-trichlorophenol.)
F024	Process wastes including but not limited to, distillation residues, heavy ends, tars, and reactor cleanout wastes, from the production of certain chlorinated aliphatic hydrocarbons by free radical catalyzed processes. These chlorinated aliphatic hydrocarbons are those having carbon chain lengths ranging from one to and including five with varying amounts and positions of chlorine substitution. (This listing does not include wastewaters, wastewater treatment sludges, spent catalysis and wastes listed in this Section 721.132.)

Hazardous Waste No.	Description of Hazardous Waste
F025	Condensed light ends, spent filters and filter aids, and spent desiccant wastes from the production of certain chlorinated aliphatic hydrocarbons by free radical catalyzed processes. These chlorinated aliphatic hydrocarbons are those having carbon chain lengths ranging from one to and including five, with varying amounts and positions of chlorine substitution.
F026	Wastes (except wastewater and spent carbon from hydrogen chloride purification) from the production of materials on equipment previously used for the manufacturing use (as a reactant, chemical intermediate or component in a formulating process) of tetra-, penta- or hexachlorobenzene under alkaline conditions.
F027	Discarded unused formulations containing tri-,tetra- or pentachlorophenol or discarded unused formulations containing compounds derived from these chlorophenols. (This listing does not include formulations containing Hexachlorophene synthesized from pre-purified 2,4,5-trichlorophenol as the sole component.
F028	Residues resulting from the incineration or thermal treatment of soil contaminated with Hazardous Waste Numbers F020, F021, F023, F026 and F027.
F032	Wastewaters, process residuals, preservative drippage and spent formulations from wood preserving processes generated at plants that currently use or have previously used chlorophenolic formulations (except potentially cross-contaminated wastes that have had the F032 waste code deleted in accordance with Section 721.135 and where the generator does not resume or initiate use of chlorophenolic formulations). This listing does not include K001 bottom sediment sludge from the treatment of wastewater from wood preserving processes that use creosote or pentachlorophenol.
F034	Wastewaters, process residuals, preservative drippage and spent formulations from wood preserving processes generated at plants that use creosote formulations. This listing does nto include K001 bottom sediment sludge from the treatment of wastewater from wood preserving processes that use creosote or pentachlorophenol.
F035	Wastewaters, process residuals, preservative drippage and spent formulations from wood preserving processes generated at plants that use inorganic preservatives containing arsenic or chromium. This listing does not include K001 bottom sediment sludge from the treatment of wastewater from wood preserving processes that use creosote or pentachlorophenol.

Hazardous Waste No.	Description of Hazardous Waste
F037	Petroleum refinery primary oil/water/solids separation sludge -- Any sludge generated from the gravitational separation of oil/water/solids during the storage or treatment of process wastewaters and oil cooling wastewaters from petroleum refineries. Such sludges include, but are not limited to, those generated in: oil/water/solids separators; tanks and impoundments; ditches and other conveyances; sumps; and stormwater units receiving dry weather flow. Sludges generated in stormwater units that doe not receive dry weather flow, sludges generated in aggressive biological treatment units as defined in subsection (b)(2) (including sludges generated in one or more additional units after wastewaters have been treated in aggressive biological treatment units) and K051 wastes are not included in this listing.
F038	Petroleum refinery secondary (emulsified) oil/water/solids separation sludge -- Any sludge or float generated from the physical or chemical separation of oil/water/solids in process wastewaters and oily cooling wastewaters from the physical or chemical separation of oil/water/solids in process wastewaters and oil cooling wastewaters from petroleum refineries. Such wastes include, but are not limited to, all sludges and floats generated in: induced air flotation (IAF) units, tanks and impoundments, and all sludges generated in DAF units. Sludges generated in stormwater units that do not receive dry weather flow, sludges generated in aggressive biological treatment units as defined in Subsection (b)(2) (including sludges generated in one or more additional units after wastewaters have ben treated in aggressive biological treatment units), F037, K048 and K051 wastes are not included in this listing.
F039	Leachate resulting from the treatment, storage or disposal of wastes classified by more than one waste code under Subpart D, or from a mixture of wastes classified under Subparts C and D. (Leachate resulting from the management of one or more of the following USEPA hazardous wastes and no other hazardous wastes retains its hazardous waste code(s): F020, F021, F022, F023, F026, F027 or F028.)

Hazardous Waste No.	Description of Hazardous Waste
C. Hazardous Wastes From Specific Sources	
K001	Bottom sediment sludge from the treatment of wastewaters from wood preserving processes that use creosote and/or pentachlorophenol.

Hazardous Waste No.	Description of Hazardous Waste
K002	Wastewater treatment sludge from the production of chrome yellow and orange pigments.
K003	Wastewater treatment sludge from the production of molybdate orange pigments.
K004	Wastewater treatment sludge from the production of zinc yellow pigments.
K005	Wastewater treatment sludge from the production of chrome green pigments.
K006	Wastewater treatment sludge from the production of chrome oxide green pigments (anhydrous and hydrated).
K007	Wastewater treatment sludge from the production of iron blue pigments.
K008	Oven residue from the production of chrome oxide green pigments.
K009	Distillation bottoms from the production of acetaldehyde from ethylene.
K010	Distillation side cuts from the production of acetaldehyde from ethylene.
K011	Bottom stream from the wastewater stripper in the production of acrylonitrile.
K013	Bottom stream from the acetronitrile column in the production of acylonitrile.
K014	Bottoms from the acetontrile purification column in the production of acrylonitrile.
K015	Still bottoms from the distillation of benzyl chloride.
K016	Heavy ends or distillation residues from the production or carbon tetrachloride.
K017	Heavy ends (still bottoms) from the purification column in the production of epichlorohydrin.
K018	Heavy ends from the fractionation column in ethyl chloride production.

Hazardous Waste No.	Description of Hazardous Waste
K019	Heavy ends of the distillation of ethylene dichloride in thylene dichloride production.
K020	Heavy ends from the distillation of vinyl chloride in vinyl chloride monomer production.
K021	Aqueous spent antimony catalyst waste from fluoromethanes production.
K022	Distillation bottom tars from the production of phenol/acetone from cumene.
K023	Distillation light ends from the production of phthalic anhydride from naphthalene.
K024	Distillation bottoms from the production of phthalic anhydride from naphthalene.
K025	Distillation bottoms from the production of phthalic anhydride from naphthalene.
K026	Stripping still tails from the production of methy ethyl pyridines.
K027	Centrifuge and distillation residues from toluene diisocyanate production.
K028	Spent catalyst from the hydrochlorinator reactor in the production of 1,1,1-trichlorethane.
K029	Waste from the product stream stripper in the production of 1,1,1-trichloroethane.
K030	Column bottoms or heavy ends from the combined production of trichlorethylene and perchloroethylene.
K031	By-product salts generated in the production of MSMA and cacodylic acid.
K032	Wastewater treatment sludge from the production of chlordane.
K033	Wastewater and scrub water from the chlorination of cyclopentadiene in the production of chlordane.
K034	Filter solids from the filtration of hexachlorocyclopentadiene in the production of chlordane.

Hazardous Waste No.	Description of Hazardous Waste
K035	Wastewater treatment sludges generated in the production of creosote.
K036	Still bottoms from toluene reclamation distillation in the production of disulfoton.
K037	Wastewater treatment sludges from the production of disulfoton.
K038	Wastewater from the washing and stripping of phorate production.
K039	Filter cake from the filteration of diethylphosphorodithioic acid in the production of phorate.
K040	Wastewater treatment sludge from the production of phorate.
K041	Wastewater treatment sludge from the production of toxaphene.
K042	Heavy ends or distillation residues from the distillation of tetrachlorobenzene in the production of 2,4,5-T.
K043	2,6-Dichlorophenol waste from the production of 2,4-D.
K044	Wastewater treatment sludges from the manufacturing and processing of explosives.
K045	Spent carbon from the treatment of wastewater containing explosives.
K046	Wastewater treatment sludges from the manufacturing, formulation and loading of lead based initiating compounds.
K047	Pink/red water from TNT operations.
K048	Dissolved air flotation (DAF) float from the petroleum refining industry.
K049	Slop oil emulsion solids from the petroleum refining industry.
K050	Heat exchanger bundle cleaning sludge from the petroleum refining industry.
K051	API separator sludge from the petroleum refining industry.
K052	Tank bottoms (leaded) from the petroleum refining industry.
K060	Ammonia still lime sludge from coking operations.

Hazardous Waste No.	Description of Hazardous Waste
K061	Emission control dust/sludge from the primary production of steel in electric furnaces.
K062	Spent pickle liquor generated by steel finishing operations of facilities within the iron and steel industry (SIC Codes 331 and 332) (as defined in 35 Ill. Adm. Code 720.110).
K064	Acid plant blowdown slurry or sludge resulting from the thickening of blowdown slurry from primary copper production.
K065	Surface impoundment solids contained in and dredged from surface impoundments at primary lead smelting facilities.
K066	Sludge from treatment of process wastewater or acid plant blowdown from primary zinc production.
K069	Emission control dust/sludge from secondary lead smelting.
K071	Brine purification muds from the mercury cell process in chlorine production, where separately pre-purified brine is not used.
K073	Chlorinated hydrocarbon waste from the purification step of the diaphram cell process using graphite anodes in chlorine production.
K083	Distillation bottoms from aniline production.
K084	Wastewater treatment sludges generated during the production of veterinary pharmaceuticals from arsenic or organo-arsenic compounds.
K085	Distillation or fractionation column bottoms from the production of chlorobenzenes.
K086	Solvent washes and sludges, caustic washes and sludges, or water washes and sludges from cleaning tubs and equipment used in the formulation of ink from pigments, driers, soaps and stabilizers containing chromium and lead.
K087	Decanter tank tar sludge from coking operations.
K088	Spent potliners from primary aluminum reduction.
K090	Emission control dust or sludge from ferrochromiumsilicon production.

Hazardous Waste No.	Description of Hazardous Waste
K091	Emission control dust or sludge from ferrochromium production.
K093	Distillation light ends from the production of phthalic anhydride from ortho-xylene.
K094	Distillation bottoms from the production of phthalic anhydride from ortho-xylene.
K095	Distillation bottoms from the production of 1,1,1-trichloroethane.
K096	Heavy ends from the heavy ends column from the production of 1,1,1-trichloroethane.
K097	Vacuum stripper discharge from the chlordane chlorinator in the production of chlordane.
K098	Untreated process wastewater from the production of toxaphene.
K099	Untreated wastewater from the production of 2,4-D.
K100	Waste leaching solution from acid leaching of emission control dust/sludge from secondary lead smelting.
K101	Distillation tar residues from the distillation of aniline-based compounds in the production of veterinary pharmaceuticals from arsenic or organo-arsenic compounds.
K102	Residue from the use of activated carbon for decolorization in the production of veterinary pharmaceuticals from arsenic compounds.
K103	Process residues from aniline extraction from the production of aniline.
K104	Combined wastewater streams generated from nitrobenzene/aniline production.
K105	Separated aqueous stream from the reactor product washing step in the production of chlorobenzenes.
K106	Wastewater treatment sludge from the mercury cell process in chlorine production.
K107	Column bottoms from product separation from the production of 1,1-dimethylhydrazine (UDMH) from carboxylic acid hydrazines.

Hazardous Waste No.	Description of Hazardous Waste
K108	Condensed column overheads from product separation and condensed reactor vent gases from the production of 1,1-dimethylhydrazine (UMDH) from carboxylic acid hydrazines.
K109	Spent filter cartridges from product purification from the production of 1,1-dimethylhydrazine (UMDH) from carboxylic acid hydrazines.
K110	Condensed column overheads from intermediate separation from the production of 1,1-dimethylhydrazine (UMDH) from carboxylic acid hydrazines.
K111	Product washwaters from the production of dinitrotoluene via nitration of toluene.
K112	Reaction by-product water from the drying column in the production of toluenediamine via hydrogenation of dinitrotoluene.
K113	Condensed liquid light ends from the (T) purification of toluenediamine in the production of toluenediamine via hydrogenation dinitrotoluene.
K114	Vicinals from the purification of toluenediamine in the production of toluenediamine via hydrogenation of dinitrotoluene.
K115	Heavy ends from the purification of toluenediamine in the production of toluenediamine via hydrogenation of dinitrotoluene.
K116	Organic condensate from the solvent recovery column in the production of toluene diisocyanate via phosgenation of toluenediamine.
K117	Wastewater from the reactor vent gas scrubber in the production of ethylene dibromide via bromination of ethene.
K118	Spent absorbent solids from purification of ethylene dibromide in the production of ethylene dibromide via bromination of ethene.
K123	Process wastewater (including supernates, filtrates, and wash waters) from the production of ethylenebisdithiocarbamic acid and its salts.
K124	Reactor vent scrubber water from the production of ethylene-bisdithiobarbamic acid and its salts.

Hazardous Waste No.	Description of Hazardous Waste
K125	Filtration, evaporation, and centrifugation of solids from the production of ethylenebisdithio carbonic acid and its salts.
K126	Baghouse dust and floor sweepings in milling and packaging operations from production or formulation of ethylenebisdithiocarbamic acid and its salts.
K131	Wastewater from the reactor and spent sulfuric acid from the acid dryer from the production of methyl bromide.
K132	Spent absorbent and wastewater separator solids form the production of methyl bromide.
K136	Still bottoms from the purification of ethylene dibromide in the production of ethylene dibromide via bromination of ethene.
K141	Process residues from the recovery of coal tar, including, but not listed to, tar collecting sump residues from the production of coke from coal or the recovery of coke by-products produced from coal. This listing does not include K087 (decanter tank tar sludge from coking operations).
K142	Tar storage tank residues from the production of coke from coal or from the recovery of coke by-products produced from coal. This listing does not include K087 (decanter tank tar sludge from coking operations).
K143	Process residues from the recovery of light oil, including, but not limited to, those generated in stills, decanters, and wash oil recovery units from the recovery of coke by-products produced from coal.
K144	Wastewater treatment sludges from light oil refining, including, but not limited to, intercepting or contamination sump sludges from the recovery of coke by-products produced from coal.
K145	Residues from napthalene collection and recovery operations from the recovery of coke by-products produced from coal.
K147	Tar storage tank residues from coal tar refining.
K148	Residues from coal tar distillation, including, but not limited to, still bottoms.

Hazardous Waste No.	Description of Hazardous Waste
K149	Distillation bottoms from the production of alpha- (or methyl-) chlorinated toluenes, ring-chlorinated toluenes, benzoyl chlorides, and compounds with mixtures of these functional groups. [This waste does not include still bottoms from the distillation of benzyl chloride.]
K150	Organic residuals, excluding spent carbon adsorbent, from the spent chlorine gas and hydrochloric acid recovery processes associated with the production of alpha- (or methyl-) chlorinated toluenes, ring-chlorinated toluenes, benzoyl chlorides, and compounds with mixtures of these functional groups.
K151	Wastewater treatment sludges, excluding neutralization and biological sludges, generated during the treatment of wastewaters from the production of alpha- (or methyl-) chlorinated toluenes, ring-chlorinated toluenes, benzoyl chlorides, and compounds with mixtures of these functional groups.

D. Discarded Commercial Chemical Products, Off-Specification Species, Container Residues, and Spill Residues Thereof:

Hazardous Waste No.	Description of Hazardous Waste
P001	Warfarin, when present at concentrations greater than 0.3%.
P002	1-Acetyl-2-thiourea
P003	Acrolein
P004	Aldrin
P005	Allyl alcohol
P006	Aluminum phosphide
P007	5-(Aminomethyl)-3-isoxazolol
P008	4-Aminopyridine
P009	Ammonium picrate
P010	Arsenic acid
P011	Arsenic pentoxide
P012	Arsenic trioxide
P013	Barium cyanide
P014	Benzenethiol
P015	Beryllium dust
P016	Bis-chloromethyl) ether
P017	Bromoacetone
P018	Brucine
P020	Dinoseb
P021	Calcium cyanide

Hazardous Waste No.	Description of Hazardous Waste
P022	Carbon bisulfide
P023	Chloroacetaldehyde
P024	p-Chloroaniline
P026	1-(o-Chlorophenyl) thiourea
P027	3-Chloropropionitrile
P028	Benzyl chloride
P029	Copper cyanides
P030	Cyanides (soluble cyanide salts) not elsewhere specified.
P031	Cyanogen
P033	Cyanogen chloride
P034	4,6-Dinitro-o-cyclohexylphenol
P036	Dichlorophenylarsine
P037	Dieldrin
P038	Diethylarsine
P039	Disulfoton
P040	O,O-Diethyl O-pyrazinyl phosphoro-thioate
P041	Diethyl-p-nitrophenyl phosphate
P042	Epinephrine
P043	Diisopropyl fluorophosphate
P044	Dimethoate
P045	Thiofanox
P046	Ethanamine, 1,10dimethyl-2-phenyl-
P047	4,6-Dinitro-o-cresol and salts
P048	2,4-Dinitrophenol
P049	2,4-Dithiobiuret
P050	Endosulfan
P051	Endrin
P054	Ethylenimine
P056	Fluorine
P057	Fluoroacetamide
P058	Fluoroacetic acid, sodium salt
P059	Heptachlor
P060	Hexachlorohexahydro-endo, endo-dimethanonaphthalene
P062	Hexaethyl tetraphosphate
P063	Hydrogen cyanide
P064	Methyl Isocyanate
P065	Mercury fulminate
P066	Methomyl
P067	2-Methylaziridine
P068	Methyl hydrazine
P069	2-Methyllactonitrile
P070	Aldicarb
P071	Methyl parathion
P072	alpha-Naphthylthiourea

Hazardous Waste No.	Description of Hazardous Waste
P073	Nickel carbonyl
P074	Nickel cyanide
P075	Nicotine and salts
P076	Nitric oxide
P077	p-Nitroaniline
P078	Nitrogen dioxide
P081	Nitroglycerine
P082	N-Nitrosodimethylamine
P084	N-Nitrosomethylvinylamine
P085	Octamethylpyrophosphoramide
P087	Osmium oxide
P088	Endothall
P089	Parathion
P092	Phenylmercuric acetate
P093	N-Phenylthiourea
P094	Phorate
P095	Phosgene
P096	Phosphine
P097	Pamphur
P098	Potassium cyanide
P099	Potassium silver cyanide
P101	Propanenitrile
P102	Propargyl alcohol
P103	Selenourea
P104	Silver cyanide
P105	Sodium azide
P106	Sodium cyanide
P108	Strychnine and salts
P109	Tetraethyldithiopyrophosphate
P110	Tetraethyl lead
P111	Tetraethylpyrophosphate
P112	Tetranitromethane
P113	Thallic oxide
P114	Thallium(1) selenide
P115	Thallium(1) sulfate
P116	Thiosemicarbazide
P118	Trichloromethanethiol
P119	Vanadic acid, ammonium salt
P120	Vanadium pentoxide
P121	Zinc cyanide
P122	Zinc phosphide
P123	Toxaphene

E. Commercial Chemical Products, Manufacturing Chemical Intermediates, or Off-Specification Commercial Chemical Products:

Hazardous Waste No.	Description of Hazardous Waste
U001	Acetaldehyde
U002	Acetone
U003	Acetonitrile
U004	Acetophenone
U005	2-Acetylaminofluorene
U006	Acetyl chloride
U007	Acrylamide
U008	Acrylic acid
U009	Acrylonitrile
U010	Mitomycin C
U011	Amitrole
U012	Aniline
U014	Auramine
U015	Azaserine
U016	Benz(c)acridine
U017	Benzal chloride
U018	Benz(a)anthracene
U019	Benzene
U020	Benzenesulfonyl chloride
U021	Benzidine
U022	Benzo(a)pyrene
U023	Benzotrichloride
U024	Bis(2-chloroethyoxy) methane
U025	Dichloroethyl ether
U026	Chloronaphazine
U027	Bis(2-chloroisopropyl) ether
U028	Bis(2-ethylhexyl) phthalate
U029	Bethyl bromide
U030	Benzene, 1-bromo-4-phenoxy-
U031	N-Butyl alcohol
U032	Calcium chromate
U033	Carbonyl fluoride
U034	Chloral
U035	Chlorambucil
U036	Chlordane, technical
U037	Chlorobenzene
U038	Ethyl 4,4'-dichlorobenzilate
U039	4-Chloro-m-cresol
U041	1-Chloro-2,3-epoxypropane
U042	2-Chloroethyl vinyl ether
U043	Vinyl chloride

Hazardous Waste No.	Description of Hazardous Waste
U044	Chloroform
U045	Methyl chloride
U046	Chloromethyl methyl ether
U047	beta-Chloronaphthalene
U048	o-Chlorophenol
U049	Benzenamine, 4-chloro-2-methyl-
U050	Chrysene
U051	Creosote
U052	Cresols
U053	Crotonaldehyde
U055	Cumene
U056	Cyclohexane
U057	Cyclohexanone
U058	Cyclophosphamide
U059	Daunomycin
U060	DDD
U061	DDT
U062	Diallate
U063	Dibenz[a,h]anthracene
U064	Dibenz[a,i]pyrene
U066	1,2-Dibromo-e-chloropropane
U067	Ethylene dibromide
U068	Methylene bromide
U069	Dibutyl phthalate
U070	o-Dichlorobenzene
U071	m-Dichlorobenzene
U072	p-Dichlorobenzene
U073	3-3'Dichlorobenzidine
U074	1,4-Dichloro-2-butene
U075	Dichlorodifluoromethane
U076	Ethylidene dichloride
U077	Ethylene dichloride
U078	1,1-Dichloroethylene
U079	1,2-Dichloroethylene
U080	Methylene chloride
U081	2,4-Dichlorophenol
U082	2,6-Dichlorophenol
U083	1,2-Dichloropropane
U084	1,3-Dichloropropane
U085	1,2:3,4-Diepoxybutane
U086	N,N-Diethylhydrazine
U087	o,o-Diethyl-S-methyl-dithiophosphate
U088	Diethyl phthalate
U089	Diethylstilbestrol
U090	Dihydrosafrole

Hazardous Waste No.	Description of Hazardous Waste
U091	3,3'-Dimethoxybenzidine
U092	Dimethylamine
U093	Dimethylaminoazobenzene
U094	7,12-Dimethylbenz[a]anthracene
U095	3,3'-Dimethylbenzidine
U096	Alpha,alpha-Dimethylbenzyhlydro-peroxide
U097	Dimethylcarbamoyl chloride
U098	1,1-Dimethylhydrazine
U099	1,2-Dimethylhydrazine
U101	2,4-Dimethylphenol
U102	Dimethyl phthalate
U103	Dimethyl sulfate
U105	2,4-Dinitrotoluene
U106	2,6-Dinitrotoluene
U107	Di-n-octyl phthalate
U108	1,4-Dioxane
U109	1,2-Diphenylhydrazine
U110	Dipropylamine
U111	Di-N-propylnitrosamine
U112	Ethyl acetate
U113	Ethyl acrylate
U114	Ethylenebis(dithiocarbamic acid), salts and esters
U115	Ethylene oxide
U116	Ethylene thiourea
U117	Ethyl ether
U118	Ethyl methacrylate
U119	Ethyl methanseulfonate
U120	Fluoranthene
U121	Metane, trichlorofluoro-
U122	Formaldehyde
U123	Formic acid
U124	Furan
U125	Furfural
U126	Glycidylaldehyde
U127	Hexachlorobenzene
U128	Hexachlorobutadene
U129	Lindane
U130	Hexachlorcyclopentadene
U131	Hexachloroethane
U132	Hexachlorophene
U133	Hydrazine
U134	Hydrogen fluoride
U135	Hydrogen sulfide
U136	Cacodylic acid
U137	Indeno[1,2,3-cd]pyrene

Hazardous Waste No.	Description of Hazardous Waste
U138	Iodomethane
U140	Isobutyl alcohol
U141	Isosafrole
U142	Kepone
U143	Lasiocarpine
U144	Lead acetate
U145	Lead phosphate
U146	Lead subacetate
U147	Maleic anhydride
U148	Maleic hydrazide
U149	Malononitrile
U150	Melphalan
U151	Mercury
U152	Methacrylonitrile
U153	Methanethiol
U154	Methanol
U155	Methapyrilene(T)
U156	Methyl chlorocarbonate
U157	3-Methylchlolanthrene
U158	4,4'-Methylenebis(2-chloroaniline)
U159	Methyl ethyl ketone
U160	Methyl ethyl ketone peroxide
U161	Methyl isobutyl ketone
U162	Methyl methacrylate
U163	N-methyl-N'nitro-N-nitrosoquanidine
U164	Methylthiouracil
U165	Napthalene
U166	1,4-Naphthalenedione
U167	1-Naphthylamine
U168	2-Naphthylamine
U169	Nitrobenzene
U170	p-Nitrophenol
U171	2-Nitropropane
U172	N-Nitrosodi-n-butylamine
U173	N-Nitrosodiethanolamine
U174	N-Nitrosodiethylamine
U176	N-Nitroso-N-ethylurea
U177	N-Nitroso-N-methylurea
U178	N-Nitroso-N-methylurethane
U179	N-Nitrosopiperidine
U180	Nitrosopyrrolidine
U181	5-Nitro-o-toluidine
U182	Paraldehyde

Hazardous Waste No.	Description of Hazardous Waste
U183	Pentachlorobenzene
U184	Pentachloroethane
U185	Pentachloronitrobenzene
U186	1,3-Pentadiene
U187	Phenacetin
U188	Phenol
U189	Phosphorous sulfide
U190	Phthalic anhydride
U191	Pyridine, 2-methyl-
U192	Pronamide
U193	1,3-Propane sultone
U194	1-Propanamine
U196	Pyridine
U197	p-Benzoquinon
U200	Reserpine
U201	Resorcinol
U202	Saccharin and salts
U203	Safrole
U204	Selenium dioxide
U205	Selenium disulfide
U206	Streptozotocin
U207	1,2,4,5-Tetrachlorobenzene
U208	1,1,1,2,-Tetrachloroethane
U209	1,1,2,2,-Tetrachloroethane
U210	Tetrachloroethylene
U211	Carbon tetrachloride
U213	Tetrahydrofuran
U214	Thallium(1) acetate
U215	Thallium(1) carbonate
U216	Thallium(1) chloride
U217	Thallium(1) nitrate
U218	Thioacetamide
U219	Thiourea
U220	Toluene
U221	Toluenediamine
U222	o-Toluidine hydrochloride
U223	Toluene hydrochloride
U225	Bromoform
U226	1,1,1-Trichloroethane
U227	1,1,2-Trichloroethane
U228	Trichloroethene
U234	sym-Trinitrobenzene
U235	Tris(2,3-dibromopropyl) phosphate
U236	Trypan blue

Hazardous Waste No.	Description of Hazardous Waste
U237	Uracil mustard
U238	Ethyl carbarmate (urethan)
U239	Xylene
U240	2,3-D, salts and esters
U243	Hexachloropropene
U244	Thiram
U246	Bromine cyanide
U247	Methoxychlor
U248	Warfarin, when present at concentrations of 0.3% or less
U249	Zinc phosphide, when present at concentrations of 10% or less
U328	o-Toluidine
U353	p-Toluidine
U359	Ethylene glycol monoethyl ether

ATTACHMENT B

INSPECTION SCHEDULE

0316000051

Table I: General Inspection Schedule
Security Devices

ITEM	INSPECTION ELEMENT/TYPE OF PROBLEM	INSPECTION FREQUENCY
Fence	. Inspect entire perimeter for breaches or damage	Daily
Gates	. Check for proper gate lock function	Daily
Warning Signs	. Check for presence of warning signs	Daily
Lighting System	. Check lights for operability	Daily

Table II: General Inspection Schedule,
Safety & Emergency Equipment

ITEM	INSPECTION ELEMENT/TYPE OF PROBLEM	INSPECTION FREQUENCY
Protective Gear (e.g., Helmets, Face Shields, Goggles, Boots, Gloves, Acid Resistant Clothing, Disposable Suits, Disposable Bags)	. Check accessibility	Daily
	. Check for adequate supply	Daily
	. Check for deterioration, damage	Daily
Breathing Apparatus	. Check for accessibility	Daily
	. Check for adequate supply, full charge on canisters, and all air tanks	Daily
	. Check for deterioration and damage	Daily
	. Check for function	Monthly
First Aid Kits	. Check accessibility	Daily
	. Check for adequate supply	Daily

ITEM	INSPECTION ELEMENT/TYPE OF PROBLEM	INSPECTION FREQUENCY
Emergency Showers	. Check that units activate and shut off properly	Daily
	. Check accessibility	Daily
Water Lines	. Check for adequate pressure	Monthly
Internal (Phone or Radio)/External (Phase) Communications Systems	. Check accessibility	Daily
	. Check for operations	Daily
Fire Extinguishers	. Check pressure gauge for full charge indication	Monthly
	. Check inspection tag to insure annual maintenance by outside fire service is up-to-date	Monthly
	. Check seal to ensure no one has used extinguisher	Monthly
	. Check to ensure access to units is not blocked	Daily
Absorbent Supply	. Check for adequate supply	Daily
Recovery Drums	. Check for adequate supply	Daily
Other Emergency and Decontamination Equipment	. Check accessibility	Daily
	. Check for adequate supply	Daily
	. Check for deterioration/damage	Daily
Respirators and Cartridges	. Check for adequate supply	Daily

Table III: Tank Farms Inspection Schedule

ITEM	INSPECTION ELEMENT/TYPE OF PROBLEM	INSPECTION FREQUENCY
Storage Tanks Containment Area	. Check for evidence of spilled materials	Daily
	. Check for cracks and gaps in, or damage to containment base, sumps and drains, and their coatings.	Daily
	. Check for evidence of seepage outside containment (e.g. discoloration)	Daily
	. Check for debris, cleanup residue, improperly stored equipment	Daily
Storage Tanks	. Inspect tank exterior for cracks, leaks, discoloration, and obvious deformation	Daily
	. Check tank integrity	Annually
Access Hatches, Vents, and Sampling Ports	. Check for leaks	Daily
	. Check for damage	Daily
Fill/Drain and Overflow Piping	. Inspect piping for leaks	Daily
	. Inspect valve seals for leaks	Daily
	. Check that handles are not bent or damaged	Daily
Liquid Levels	. Check if operators log book is up to date	Daily
	. Check tank liquid level indicators for operability	Daily
All Ancillary Equipment	. Visual inspection for leaks	Daily
	. Conduct leak test or approved integrity assessment	Annually

ITEM	INSPECTION ELEMENT/TYPE OF PROBLEM	INSPECTION FREQUENCY
Tank Truck loading/ Unloading Area	. Check for evidence of spills or releases in unloading area	Daily
	. Check for removal of spill absorbent and cleanup materials	Daily
	. Check sump, grating and curbs for cracks or other damage	Daily
	. Inspect hoses for deterioration or leakage	Daily
	. Inspect hose couplings and valves for leakage	Daily
	. Inspect containment system for deterioration	Daily

Table IV: Container Storage Area Inspection Schedule

ITEM	INSPECTION ELEMENT/TYPE OF PROBLEM	INSPECTION FREQUENCY
Container Storage Area	. Check for evidence of spilled material on slab, ramps, drains, sumps	Daily
	. Check for removal of absorbent materials and cleanup rags	Daily
	. Check for, cracks and gaps in, or damage to, containment bases, sump and drains and coatings	Daily
	. Check for erosion, uneven settlement, etc.	Daily
	. Check for corrosion of grating over drains and sumps	Daily
	. Check for condition and availability of overpack containers	Monthly

ITEM	INSPECTION ELEMENT/TYPE OF PROBLEM	INSPECTION FREQUENCY
Stored Containers	. Check for drums being in good condition	Daily
	. Check that drums are not open	Daily
	. Check for proper placement	Daily
	. Check adequacy of aisle space	Daily
	. Check height of stacks	Daily
	. Check storage capacity not exceeded	Daily
	. Check for proper labeling	Daily
Container Loading/ Unloading Area	. Check for damaged containers	Daily
	. Check for evidence of spilled material on slabe and ramps used	Daily
	. Check for removal of used absorbent and cleaning materials	Daily
	. Check for prompt container removal from receiving area	Daily

ATTACHMENT C

CONSTRUCTION CERTIFICATION FORM

NO. 0316000051

Illinois Environmental Protection Agency · P.O. Box 19276, Springfield, IL 62794-9276

DATE: March 22, 1989

TO: Facilities Permitted Under the IEPA RCRA and UIC Programs

FROM: DLPC Permit Section

SUBJECT: Certification Documentation for Construction Required by IEPA-Issued Permits

When submitting certifications required by a Part B or UIC permit for construction of any newly developed areas or units, please complete the attached certification form. Modifications to the construction of UIC wells should be certified with this form, but the installation of groundwater monitoring wells does not require this certification (unless specifically required by the permit). This will help to ensure that the submittal reaches its proper destination and that the certification will meet the regulatory requirements. Sending the Field Operations Section (F.O.S.) copy directly to the Field Office is acceptable as long as all copies have a completed copy of the enclosed form attached and you advise the Permit Section, in writing, that a copy has been sent to F.O.S.

A documentation report and as-built drawings (sealed and signed by an Illinois Professional Engineer) must be included with this certification. Information necessary to document the construction of the unit or area and to support the certification must be contained within the report. This report should include a thorough description of all construction data and drawings and should be formatted in a logical and orderly manner. The construction documentation report must contain at least the following items:

1. An introduction and summary which describes the scope and purpose of the project;

2. A description of all construction activities, including quality assurance and quality control;

3. As-built drawings of the area or unit and a description of any deviations from the plans and specifications approved in the permit;

4. A description of the test methods used and justification for any deviations from standard test methods;

5. A summary of test results, identification of any samples which did not meet the specifications and the corrective action and retesting which was undertaken in response to any failing test results;

6. Any necessary information associated with construction of the area or unit to document that construction was in accordance with the plans and specifications approved by the permit;

7. Information specifically required by the permit; and

8. Any available photographs of the area or unit.

If you have any questions, please contact a member of the DLPC Permit Section at 217/782-6762.

BC:rdl117k/49

Enclosure

cc: Permit Section
Compliance Section
Glenn Savage

CERTIFICATION

This statement is to be completed by both the responsible officer and the registered professional engineer upon completion of construction in accordance with 35 IAC Section 702.126. Submit one copy of the certification with original signatures and two additional copies (four additional copies for UIC wells). Forward these certification statements and any information required by the permit to the following address:

Illinois Environmental Protection Agency
Division of Land Pollution Control - #24
Permit Section
2200 Churchill Road
P.O. Box 19276
Springfield, Illinois 62794-9276

FACILITY NAME: _____

IEPA SITE CODE: _ _ _ _ _ _ _ _ _ _

U.S. EPA ID NO.: IL _ _ _ _ _ _ _ _ _ _

PART B PERMIT LOG #/UIC PERMIT #: _____

PERMIT (OR MODIFICATION) ISSUANCE DATE: _____

PERMIT CONDITION NO. REQUIRING CERTIFICATION: _____

The _____ has been constructed in accordance with the specifications in the Part B/UIC Permit. Documentation that the construction was in accordance with the permit is contained in the enclosed report. I certify under penalty of law that this document and all attachments were prepared under my direction or supervision in accordance with a system designed to assure that qualified personnel properly gather and evaluate the information submitted. Based on my inquiry of the person or persons who manage the system, or those persons directly responsible for gathering the information, the information submitted is, to the best of my knowledge and belief, true, accurate, and complete. I am aware that there are significant penalties for submitting false information, including the possibility of fine and imprisonment for knowing violations.

_____	_____
Signature of Owner/Operator	Name and Title
_____	_____
Signature of Registered P.E.	Name of Registered P.E. and Illinois Registration Number
_____	
Date	(P.E. SEAL)

BC:dks/3924j, 27

ATTACHMENT D

SPECIAL CONDITIONS

NO. 0316000051

A. Waste Analysis

1. All hazardous waste blended into a fuel to be burned for energy recovery must have a heating value of at least 5,000 BTU/lb. This requirement may be superseded if Clean Harbors provide documentation to the Agency that all facilities which receive the waste fuel have a certification of compliance based on Clean Harbor's specification.

2. The Permittee(s) shall document the receipt of each load of waste at that site in the operating record. The results of any analyses and any supplemental analyses performed on any received waste shall also be placed in the operating record.

   a. If manifest discrepancies are encountered, the procedures used to reconcile the discrepancy shall be included in the operating record;

   b. If a manifest discrepancy is not resolved within (15) days after receiving the waste, the Permittee(s) must immediately submit a letter to the Agency's Division of Land Pollution Control, describing the discrepancy and attempts to reconcile it and a copy of the manifest or shipping paper at issue.

3. Used oil which is received at this facility for blending into a fuel program or re-refining is subject to a TCLP analysis unless an analysis (by EPA Method 9077) shows total halogens is less than 1000 ppm or an adequate rebuttal is made. Used oil destined for other uses besides a fuel program or re-refining (disposal, road application, . . .) are subject to the full TCLP requirements.

4. Storage

   Before any waste other than lab packs or wastes with no free liquids are placed into a storage unit, facility management will assess the compatibility of the waste with the storage unit materials of construction and with wastes already stored therein.

   a. Containerized storage compatibility will be assessed by performing a Liquid Waste Compatibility Test as described in the letter dated September 17, 1993 from Paul Ahearn, CHCI.

b. Tank Farm Compatibility will be assessed by performing a Liquid Waste Compatibility Test on the liquid received for bulk storage with a composite sample of the tanks within the containment system to which the new waste will be added.

The referenced procedure, Liquid Waste Compatibility Test D5058A, is described in the following publication "Annual Book of ASTM Standards", American Society for Testing Materials, 1916 Race Street, Philadelphia, PA 19013, most recent edition.

The test shall be conducted in the following manner, a 100 ml. proportional composite shall be made of the existing inventory in the storage area. A 5 ml. sample of the composite shall be mixed with a 5 ml. sample of the incoming waste to determine a compatibility. If no reaction is observed, 5 ml. of the incoming waste is added to the larger (remaining 95 ml.) composite in preparation for testing the next sample.

5. Each bulk shipment will be visually inspected and sampled to verify that the contents match the pre-acceptance description of the waste.

In the case of container shipments, each container in the shipment will be visually inspected by obtaining a full depth vertical sample to verify that the contents match the pre-acceptance physical description of the waste. Full vertical depth samples are not required in cases of hardened solids.

The Permittee(s) shall determine visual characteristics (color, obvious viscosity or lack thereof, phase character, odor,...) which are appropriate to each stream to aid in determining if the physical appearance of the waste received conforms to the description of the waste when initially evaluated. Changes in the visually determined characteristics require contacting the generator to reconcile the discrepancies. If the discrepancies cannot be reconciled this is a new waste which requires performing a pre-qualification analysis to fully evaluate its compatibility to the facility's operation.

6. The company shall conduct pre-acceptance analysis in accordance with the approved waste analysis plan and the following requirements:

a. At least every five years, a pre-acceptance analyses shall be conducted in accordance with the most current instructions for special waste stream applications.

B. Reporting Requirements

1. Any incident which requires implementation of the contingency plan shall be recorded in the facilities operating record in an incident

log which is maintained separate from the facilities other than operating records. The incident log must include a copy of each incident report. In addition to the information identified in the approved application, the incident report must include, at a minimum, the waste management units involved in the incident, the cause of the release, measures taken to correct the situation and prevent a reoccurrence.

C. Closure

1. At least 45 days prior to closure of any hazardous waste management unit at this facility the permittee shall submit its closure plan to insure it complies with the current Agency standards in effect at the time of closure.

D. General Operating Requirements

1. The permittee is prohibited from conducting any waste management activities outside the permitted boundaries of this facility without a permit modification and proof of compliance with Section 3.32 and Section 39(c) of the Act. Waste management includes storage, staging, treatment, sampling or all other activities not associated with transportation of waste.

E. Construction Requirements

1. The proposed hazardous waste management units must be constructed in accordance with the approved permit application and the Part B permit. Modification to the tank system and tank or container, secondary containment system including changes to physical dimensions or materials of construction are subject to the permit modification requirements prior to construction. Changes in structural members or foundation design which are completed prior to the operation of the hazardous waste management unit and have been certified by the Illinois licensed structural engineer of record are not subject to the permit modification requirements provided the changes are made solely to maintain the structural integrity of the unit.

2. The Permittee(s) shall provide the concrete slab, the curbs and the walls that are used as part of the containment for the unloading areas with an impermeable surface coating that:

   a. is compatible with the waste, or any other liquid, stored in the containment system; and

b. will prevent migration of the waste into the concrete of the slab or wall.

c. The Permittee(s) shall install a compatible caulking or sealant at each existing joint in the secondary containment system of the unloading areas to make the joint liquid tight. These joints include but are not limited to, all construction joints within the slab, walls and curbs and joints between the slab and curb, between two curbs, between the slab or curb and wall and joints between two walls. The caulking or sealant shall be compatible with the stored waste, or any other liquid, stored in the same containment system with the hazardous waste.

The coatings, caulking and/or sealant shall be applied by September 30, 1994. Within thirty days, but no later than October 30, 1994, after providing a coating/sealant to render the base impervious to wastes and precipitation, the Permittee(s) shall submit to the Agency a certification from an Illinois Registered Professional Engineer attesting to this fact. The certification shall contain the information described in Attachment C.

This condition does not apply to the Bulk Solids Storage Pad.

d. Clean Harbors shall perform a complete inspection of the surface coating yearly in the unloading areas and perform annual maintenance to insure the integrity of the coating.

F. Contingency Plan

1. The Agency Field Office (Maywood) shall be notified within 24 hours of implementing the contingency plan unless the spill or leak is less than or equal to one pound in quantity and immediately contained and cleaned up. The contingency plan must be implemented whenever there is a fire, explosion or spill which involves hazardous waste or which occurs in areas where hazardous waste is treated or stored. This includes spills within the containment system. A spill is any release of material outside the permitted unit, into or outside of the containment system. A spill shall not include controlled accumulation of hazardous waste in small containment devices (e.g., bucket, drip pan but does not include sumps, or the primary secondary containment) used to collect and control the release of waste during routine processing or maintenance activities such as draining hoses or disassembling and repairing a pump.

2. The Permittee(s) shall contact the local emergency response entities immediately after implementation of the contingency plan unless the spill is less than quantity specified in the air modeling at 100 meters and it is immediately contained and cleaned up. The model spill volume may be adjusted without further modelling if an actual analyses of the waste on-hand is available. That is, the model spill volume may be multiplied by the inverse of the concentration (by weight percent) of the compound in question. This calculated spill volume would then be used to determine if the spill has a potential to impact areas off-site.

   a. The entities which must be notified include:

      1. Chicago Police Department;

      2. Chicago Fire Department;

      3. The Agency Field Office (Maywood);

      4. The Illinois Emergency Management Agency (IEMA);

      5. The National Response Center;

      6. The Local Emergency Planning Committee; and

      7. The Metropolitan Water Reclamation District of Greater Chicago.

   b. The information which must be initially relayed to each entity includes:

      1. The type of emergency (release, fire or explosion);

      2. The type of wastes involved in the emergency and the approximate quantity involved; and

      3. An initial assessment of the conditions at the site; and whether outside help is needed to properly respond to the situation.

   c. If the Permittee(s) is able to properly respond to the emergency without any aid from the entities identified in Condition 2.a above, the Permittee(s) shall notify each of these entities that the emergency situation no longer exists once all required emergency response and cleanup activities have been completed.

3. Within 90 days of the effective date of this permit, the Permittee(s) shall demonstrate to the Agency that the following information has been provided to the local fire department, the local police

department and all other agencies identified in 35 Ill. Adm. Code 724.153(b) (Note: This information must be provided to these entities to ensure the requirements of 35 Ill. Adm. Code 724.137 are met):

a. A list of all hazardous wastes to be managed at the facility (generic name) including the USEPA hazardous waste number;

b. A scaled drawing showing the location of all hazardous waste management units at the facility and all other areas where waste is managed at the facility (such as loading/unloading areas, etc.). This scaled drawing must also identify the entrances to the facility, roads within the facility and possible evacuation routes;

c. A description of the types of waste managed at each hazardous waste management unit at the facility;

d. A description of the procedures used to handle waste at the facility; and

e. An estimate of the quantity of the various types of waste which may be present at the facility and an estimate of the typical inventory of wastes at the facility.

f. The following information regarding the properties of the wastes managed at the facility:

   Name
   USEPA Hazardous Waste Number
   CAS Number
   IDLH
   TLVs (TLV-TWA, TLV-STEL, TLV-C)
   Boiling Point (if applicable)
   Vapor pressure at two temperatures
   NFPA Designation (flammable or combustible)
   Material Safety Data Sheets
   Other appropriate characteristics (such as reactive class, etc.)
   USDOT classification

   If the Permittee(s) can provide documentation that the local police department, fire department and HAZMAT Unit do not want this information and that the information which has been provided to them is adequate, the Permittee(s) may submit a Class I modification to modify this condition.

g. The results of the air modeling conducted by the facility.

4. Within sixty (60) days of the effective date of this permit, the Permittee(s) shall provide documentation to the Agency that the agreements and arrangements identified below have been made. Where necessary, documentation must be provided that any agency identified in 35 Ill. Adm. Code 724.153(b) declined to enter an agreement or arrangement. The specific arrangements and agreements which must be made include:

   a. Arrangements to familiarize the local police department, local fire departments and other local emergency response teams with the layout of the facility, properties of hazardous wastes handled at the facility and associated hazards, places where facility personnel would normally be working, entrances to and roads inside the facility and possible evacuation routes.

   b. Agreements designating primary emergency authority to a specific police department and a specific fire department, where more than one police department and fire department might respond to an emergency. Agreements should also be made with the other surrounding police and force departments to provide support to the primary emergency authorities;

   c. Agreements with state emergency response teams, emergency response contractors and equipment suppliers;

   d. Arrangements to familiarize local hospitals with the properties of the hazardous wastes handled at the facility and the types of injuries or illnesses which could result from fires, explosions or releases at the facility.

   e. Arrangements to identify a single local emergency response agency as the primary agency which will coordinate activities required by these agencies during an emergency at the facility.

   The facility shall also attempt to develop emergency plans and coordination agreements with the state and local emergency entities identified above. The detail of the arrangements made with the local and state emergency entities may be dependent upon the types of wastes handled at the facility and the potential need for the services of the various entities.

5. The Permittee(s) shall review all components of the contingency plan with the local emergency response entities within 12 months of the effective date of the permit and each year afterwards. Copies of the meeting notes and list of attendees shall be placed in the facility's operating record and be available to the Agency for review upon oral or written request.

G. Miscellaneous

1. All used oil which contains greater than 1,000 ppm halogens which cannot be adequately rebutted are hazardous wastes and must be handled accordingly (i.e., they cannot be processed into an on-specification or off-specification used oil fuel).

2. Clean Harbors shall implement the suggestions by Gage Babcock & Associates for fire control within one year of the effective date of this permit for existing areas and the proposed areas upon development.

3. Wastes carrying the hazardous waste code classification of F020, F021, F022, F023, F026 and F027 shall not be stored in the proposed Bulk Solids Storage Area.

4. All wastes to be stored in the Bulk Solids Storage Area must not exhibit the characteristic of corrosivity on a 10% solution of the solid.

5. All wastes dewatered by portable pumps must be analyzed by the paint filter test. Wastes which fail will still retain the characteristic of corrosivity.

6. Water reactive solids may not be stored in the Bulk Solids Storage Area.

7. Wastes for fuel blending, as received, shall have a minimum BTU value of 6,000 BTU/lb and a maximum halogen content of 10%. The operating record shall include an inventory record of the wastes in storage (for fuel blending) cross-referenced to an analysis of the waste as received or an analysis of the blended fuel for BTU value and total halogens.

8. Lab packing operations (sorting, pour off, transfer but not storage) are only approved for areas where there is a functional fume hood for the operation.

9. The following activities are no longer permitted:

   a. The treatment of characteristic (D002 only) oil within Processing Building #2; and

   b. The bulking of hazardous wastes (which do not contain free liquids) with Process Building #2.

H. Listed Waste Treatment

Stabilization

1. The stabilization facility cannot accept wastes containing over 2% (by weight) of mercury.

2. The stabilization facility cannot stabilize wastes containing parameters above land ban restrictions whose BDAT as identified in the Federal Register is not based on stabilization (i.e., cyanide, organics, etc.). Attachment A identifies acceptable codes of wastes which may be stabilized that have hazardous constituents above their maximum specified LDR limit.

3. Workers inside Process Building No. 3 must wear respirators which are designs to remove particulates (HEPA) and organic compounds from the air they breathe. In addition, the workers must be equipped as necessary, to meet the applicable requirements of OSHA.

4. The following items shall be documented in the operating record for the Waste Stabilization Facility regarding each load of waste received for stabilization/solidification:

   a. Time and date that each waste load is received;

   b. Permit number and manifest number associated with the waste;

   c. Waste name, generator name and location (including the USEPA and IEPA identification number);

   d. Volume of waste received;

   e. Identification of the receiving bay where the incoming waste is placed;

   f. Information pertaining to the actual treatment process, including:

      i. The time and date when each waste load is treated at the mixing unit;

      ii. The amount of material added to the waste in the mixing unit (mass per mass or mass per volume basis);

      iii. Length of time treated waste "cures" before being subjected to the paint filter test, the penetrometer test and any additional tests;

iv. Results of the paint filter test; the penetrometer test, if applicable; and

v. All analytical results obtained in evaluating the stabilization achieved during treatment of the waste as required in.

g. The results of the initial treatability study/development of the treatment recipe.

5. The areas where waste is handled within the stabilization building (unloading area, mixing area, loading area, areas trafficked in transporting waste to and from the mixing unit (i.e., mixing box or mixing equipment) shall be inspected each time after a mixing unit is either filled or emptied. Any waste residue observed on the floor shall be cleaned up immediately. Any spills which occur during the treatment process or during the movement of waste within the facility shall be responded to immediately in accordance with the contingency plan. Documentation of each inspection and spill incident shall be placed in the operating record.

6. The areas heavily trafficked during transport of waste to and from the mixing unit shall be cleaned at the end of each eight hour operating shift as time and circumstances allow in accordance with the following procedures:

a. Operation of the stabilization facility shall cease during the required cleanup activities;

b. The areas of concern shall be cleaned through use of a pressure washer or steam cleaner. Wastewater generated during this activity shall be directed to the collection sump.

c. All washwater which collects in the sump shall be removed prior to resuming operation; and

d. Documentation of the cleaning activities shall be placed in the operating record of this facility.

7. The mixing unit (i.e., the waste feed hoppers, the mixers, and all associated waste transfer appurtenances) or mixing boxes shall be completely emptied (i.e., as much waste as possible shall be removed) prior to placing a waste in the unit which is subject to different land disposal restrictions than the waste that was previously in the unit. The mixing unit mixing box will be considered empty when it contains no more than 3% (by weight) of the waste that was initially in the unit. Documentation of this cleaning effort shall be placed in the operating record for the facility.

8. Treated waste subject to the land disposal restrictions of 40 CFR 268 and/or 35 Ill. Adm. Code 728 shall be managed in accordance with the following procedures:

   a. The treated waste shall not be placed in a landfill disposal unit until it has been demonstrated that the applicable restrictions are met.

   b. Until such time as the analyses necessary to demonstrate compliance with these restrictions are completed, the treated waste shall be stored. Wastes subject to different land disposal restrictions shall be segregated from each other prior to, during and after treatment until it is demonstrated that the wastes have each passed the treatment standards applicable to that waste.

   c. The container or tank may contain waste generated over more than one day of operation.

   d. Once the samples required for the demonstration have been obtained, no new wastes may be added to the container(s) and a new container(s) for the waste of concern must be started.

   e. The demonstration shall be carried out in accordance with the steps listed below:

      i. To comply with the initial demonstration of documenting the facility's ability to treat a particular waste code. A representative sample shall be collected from the first twenty (20) roll-off boxes and an analyses performed to demonstrate compliance with parameters specific to the Land Disposal Restrictions (LDR) for the pertinent waste code. The results of the sampling (before and after) shall be submitted to this Agency within 30 days after the completion of the analysis of the samples.

      ii. Once a facility has demonstrated its ability to meet the LDR standards for a particular code, the Permittee(s) may reduce the sampling frequency to the first and last batches, respectively, in any group of containers for which compliance is to be determined.

      iii. If the treatment standard for any of the constituents is exceeded:

         1. Treated waste which fails to meet the requirements shall receive additional treatment (this may consist of additional curing time, reintroduction into the

treatment facility for further stabilization or transfer to another facility for additional treatment).

2. In no event shall the waste be placed in a land disposal unit until the waste meets the applicable LDR standards.

9. All wastes which failed the gate control paint filter test shall be tested by the penetrometer test (after stabilization). No wastes which fails to possess a load bearing capacity of at least 2.0 tons per square foot (TSF) may be disposed.

I. Chemical Oxidation

1. The following waste codes may be processed in the listed waste treatment building utilizing the above method:

D018	Wastes containing less than 35 ppm benzene
D028	Wastes containing less than 10 ppm 1,2-Dichloroethane
D029	Wastes containing less than 100 ppm 1,1-Dichloroethylene
D030	Wastes containing less than 5 ppm 2,4-Dinitrotoluene
D032	Wastes containing less than 10 ppm Hexachlorobenzene
D033	Wastes containing less than 10 ppm Hexachlorobutadiene
D034	Wastes containing less than 5 ppm Hexachloroethane
D035	Wastes containing less than 400 ppm Methyl-Ethyl-Ketone
D039	Wastes containing less than 5 ppm Tetrachlorethylene
D040	Wastes containing less than 10 ppm Trichloroethylene

J. Carbon Adsorption

1. All wastes to be treated using carbon adsorption must be evaluated through a treatability study to determine if the carbon adsorption is effective in removing the organic constituents below MWRDGC's sewer discharge. Testing shall be conducted after actual treatment to verify treatment. For wastewater shipped off-site (in accordance with the LDR requirements), the Permittee(s) shall provide to the receiving facility a "certification" for all treatment standards that have been achieved, and/or a "notification" for all constituents which do not meet applicable LDR treatment standards.

ATTACHMENT E

CLOSURE CERTIFICATION FORM

NO. 0316000051

This statement is to be completed by both the responsible officer and by the registered professional engineer upon completion of closure. Submit one copy of the certification with original signatures and three additional copies.

Closure Certification Statement

The hazardous waste management units at the facility described in this document have been closed in accordance with the specifications in the Agency approved closure plan. I certify under penalty of law that this document and all attachments were prepared under my direction or supervision in accordance with a system designed to assure that qualified personnel properly gather and evaluate the information submitted. Based on my inquiry of the person or persons who manage the system, or those persons directly responsible for gathering the information, the information submitted is, to the best of my knowledge and belief, true, accurate, and complete. I am aware that there are significant penalties for submitting false information, including the possibility of fine and imprisonment for knowing violations.

USEPA ID Number	Facility Name
Signature of Owner/Operator	Name and Title
Signature of Registered P.E.	Name of Registered P.E. and Illinois Registration Number
Date	

ATTACHMENT F

REQUIRED SCOPE OF WORK

FOR A RCRA FACILITY INVESTIGATION

Scope of Work for a RCRA Facility Investigation
Clean Harbors of Chicago Facility

This Scope of Work relates specifically to the RCRA Facility Investigation (RFI) of the solid waste management units ("SWMU") identified in Section IV of this RCRA Permit, which the Permittee(s) is required to perform under the terms of this RCRA permit. In this Scope of Work, "Agency's DLPC" refers to the Illinois Environmental Protection Agency's Division of Land Pollution Control, Permittee(s) refers to Clean Harbors of Chicago, and the Illinois International Port District.

I. PURPOSE

The purpose of the RFI is to determine the nature and extent of releases of hazardous waste or constituents, if any, from SWMUs located at the facility and to gather data necessary to prepare a Corrective Action Plan (CAP). Specifically, the information gathered during the RFI will be used to help determine the need, scope and design of a corrective action program.

II. SCOPE OF WORK

The Scope of Work for the RFI is divided into three phases -- Phases I, II and III.

1. The purpose of Phase I is to provide information on the characteristics and integrity of each unit and conduct field activities, as necessary, to determine if a SWMU has released, is currently releasing, or has the potential to release hazardous waste or constituents to the soil or air which may be impacted for that SWMU.

2. Phase II of the RFI will be required if the Agency's DLPC determines from the data obtained in Phase I that, for any SWMU, (1) a release has occurred to the soil, (2) a release is occurring to the soil or (3) the results are inconclusive. The purpose of Phase II is to define the extent of releases to the soil from these SWMUs.

3. Phase III will be required if the Agency's DLPC determines from the data obtained in Phase II that hazardous wastes or constituents may have migrated to the groundwater. The purpose of Phase III is

to define the extent of releases both on-site and off-site to the ground water from SWMUs identified in Phase I or II to have potentially released hazardous waste or hazardous constituents to the groundwater.

Each phase of the investigation is divided into three Subparts. The first Subpart deals with the development of a RFI Workplan by the Permittee. The second Subpart is the implementation of the RFI. The final Subpart covers the submission of reports of activities and results of the RFI.

III. RFI WORKPLANS

The Permittee(s) shall prepare a detailed workplan for each phase of the RFI which contains detailed background information related to the facility and the SWMUs listed in Condition B.1 of Section IV of the permit and which describes procedures for each phase of the RFI in accordance with the schedule in Section IV of the permit. The RFI Workplan must, at a minimum, contain the information identified in III.A-III.H below. The information in the workplan must be presented in a manner which is similar to the format set forth in these sections. Information provided in each Phase of the RFI may be incorporated into the workplan for the subsequent Phase by reference. Information already submitted in the Part B permit application may also be incorporated by reference into the workplans when appropriate.

A. GENERAL FACILITY INFORMATION

The following information must be provided in the Phase I RFI Workplan regarding the facility overall:

1. A description of the facility, including the nature of its business, both past and present. This description should identify (1) the size and location of the facility, (2) the raw materials used and products manufactured at the facility and (3) the Standard Industrial Code which describes the type of activities carried out at the facility;

2. Identification of past and present owners;

3. A discussion of the facility's past and present operations, including all solid and hazardous waste generation, storage, treatment and disposal activities;

4. A brief discussion of each of the SWMUs identified in Condition B.1 of Section IV of this permit;

5. A description of all significant surface features (ponds, streams, depressions, etc.) and wells within 1,500 feet of the facility;

6. A description of all land usage within 1,500 feet of the facility, including all known SWMUs;

7. Identification of all human populations and environmental systems potentially susceptible to contaminant exposure from releases from the SWMUs within a distance of at least 1,500 feet of the facility;

8. A description of any interim corrective action measures which were or are being planned or undertaken at the facility;

9. Approximate dates or periods of past spills or releases, identification of material spilled, amount spilled, location, and a description of the response actions, including any inspection reports or technical reports generated as a result of the spill or release.

10. A current topographic map(s) showing a distance of at least 1,500 feet around the facility and other information described below, and at a scale of one inch equal to not more than 200 feet. Contours shall be shown on the map, with the contour interval being sufficient to clearly show the pattern of surface water flow. If such a map is not available, the workplan shall describe the method for generating the map for inclusion in the Phase I report. The map shall clearly show the following:

    a. Map scale, North arrow, date, and location of facility with respect to Township, Range and Section;

    b. Topography and surface drainage depicting all waterways, wetlands, 100-year floodplain, drainage patterns, and surface water areas;

    c. Property lines, with the owners of all adjacent property clearly indicated;

    d. Surrounding land use;

e. Locations and boundaries of (1) all solid waste management units, both past and present, (2) spill areas and (3) other suspected areas of contamination;

f. All injection and withdrawal wells, and

g. All buildings, tanks, piles, utilities, paved areas, easements, rights-of-way, and other features including all known past and present product and waste underground tanks or piping.

The map(s) shall be of sufficient detail and accuracy to locate and report all current and future RFI work performed at the site. The base map(s) shall be submitted in the Phase I report and modified in subsequent reports and workplans as appropriate.

B. NATURE AND EXTENT OF CONTAMINATION

The Phase I Workplan must contain the following information, to the extent known, for each of SWMUs identified in Condition B.1 of Section IV of the permit:

1. Location of unit/area;

2. The horizontal and vertical boundaries of each unit/area;

3. Details regarding the construction, operation and structural integrity of each unit/area;

4. A description of all materials managed and/or disposed at each SWMU including, but not limited to, solid waste, hazardous wastes, and constituents, hazardous substances to the extent they are known or suspected over the life of the facility including:

   (a) Type of solid waste, hazardous waste or constituents or hazardous substances placed in the units, including source, hazardous classification, quantity and chemical composition;

   (b) Physical and chemical characteristics, including physical form, physical description, general chemical class, cohesiveness of the waste;

5. Quantities of solid and hazardous wastes managed by the unit;

6. The history of the utilization of each SWMU and the surrounding areas, including the period of operation and age of the unit;

7. Methods used to close the unit, if applicable;

8. All available data and qualitative information on the level of contamination present at the SWMU;

9. A description of the existing degree and extent of contamination at each unit area.

10. Identification of additional information which must be gathered regarding 1 thru 9 above;

C. ADMINISTRATIVE OUTLINE

The Permittee(s) shall submit as part of each Phase Workplan a general outline defining the RFI objectives, technical approach, and scheduling of tasks during that phase of the RFI. The Permittee(s) shall prepare a Project Management Plan as part of each Phase Workplan which will include a discussion of the technical approach, schedules, budget, and personnel. The Project Management Plan must also include a description of the qualifications of personnel performing or directing the RFI, and a description of any contractor personnel qualifications. This plan shall also document the overall management approach to the current Phase of the RFI.

D. SITE-SPECIFIC SAMPLING PLANS

The Permittee(s) shall prepare detailed site-specific sampling plans for each phase of the RFI which address all field activities needed to obtain site-specific data. The plans must contain: a statement of sampling objectives, specifications of equipment, analyses of interest, sample types, sample locations and schedules for sampling. Wherever appropriate, Test Methods for Evaluating Solid Wastes, Third Edition, (SW-846), including Final Update I, sampling, analysis, and statistical methods shall be utilized. The plans must address all levels of the investigations, as well as types of investigations conducted on specific environmental media (i.e., soil, air, surface water, groundwater). The plans must describe in detail how each phase of the RFI will be implemented.

1. Phase I Sampling and Analysis Plan

The Phase I Sampling and Analysis Plan must describe methods to determine whether any of the SWMUs to be investigated have released or are currently releasing hazardous waste or constituents, hazardous substances, agrichemical or pesticide into the environment. This Phase I Sampling Plan shall be submitted as part of the RFI Phase I Workplan. The workplan must contain procedures for a:

a. Soils Investigation

The Phase I Workplan must provide for a determination of the presence or absence of releases of hazardous waste and constituents, hazardous substances, agrichemicals or pesticides into the soil around and under each SWMU which must be investigated, based upon the information present in the Phase I Work Plan. To meet this requirement, the workplan must identify:

(1) The procedures which will be used to describe and characterize the soils in and around the subject SWMU(s) down to the water table, including, but not limited to, the following:

(a) Unified Soil Classification;

(b) Soil profile; and

(c) Elevation of water table;

(2) The parameters and hazardous constituents to be used to establish the presence or absence of contamination. These must include, but are not limited to, specific hazardous constituents of wastes known or suspected to have been managed by the SWMU(s) as identified and determined by the unit characterization information presented in the work plan.

(3) The basis for selecting the parameters and constituents in (3) above.

(4) The methodology for choosing sampling locations, depths, and numbers of samples.

(5) Sampling procedures for each parameter or constituent to be analyzed. All soil samples taken must be handled in accordance with 40 CFR 261, Appendix III and the Agency's DLPC soil volatile sampling procedure if volatiles are to be analyzed. All other environmental media samples must be collected and handled in accordance with USEPA approved and standardized methods for evaluation of solid wastes.

(6) Analytical methods to be used in the analysis of the samples. If any of these methods is not consistent with those specified in Test Methods for Evaluating Solid Waste, Physical/Chemical Methods, Third Edition (U.S. EPA SW-846), a complete description of the methods to be used and the justification for not using the appropriate SW-846 methods must be provided.

(7) Procedures and criteria for evaluating analytical results to establish the presence or absence of any contamination.

b. Air Investigation

(a) The Phase I Workplan must provide for an investigation to characterize the particulate and gaseous contaminants released into the atmosphere. A determination of "no impact" must be justified and documented to the satisfaction of the Agency's DLPC. This investigation shall provide the following information:

(1) A description of the horizontal and vertical direction and velocity of contaminant movement;

(2) The rate and amount of release; and

(3) The chemical and physical composition of the contaminants release, including horizontal and vertical concentration profiles.

The Permittee(s) shall document the procedures used in making the above determinations.

(b) The Phase I Workplan must provide for characterizing the climate in the vicinity of the facility. Such information shall include, but not be limited to:

(1) A description of the following parameters:

(a) Annual and monthly rainfall averages;

(b) Monthly temperature averages and extremes;

(c) Wind speed and directions;

(d) Relative humidity and dew point;

(e) Atmospheric pressure;

(f) Evaporation data;

(g) Development and inversions; and

(h) Climate extremes that have been known to occur in the vicinity of the facility, and the frequency of occurrence.

(2) A description of topographic and manmade features which affect air flow and emission patterns, including:

(a) Ridges, hills or mountain areas;

(b) Canyons or valleys;

(c) Surface water bodies;

(d) Wind breaks and forests;

(e) Buildings; and

(f) Other man-made features.

2. <u>Phase II Sampling and Analysis Plan</u>

The Phase II Sampling and Analysis plan, if necessary, must describe procedures to determine the nature and extent of hazardous waste and/or hazardous constituents released to the soil. This workplan shall address and/or include, at a minimum:

(1) A description of what is known about the horizontal and vertical extent of contamination;

(2) A description of relevant contaminant and environmental chemical properties within the affected source area and plume, including solubility, specification absorption, leachability, exchange capacity biodegradability, hydrolysis, photolysis, oxidation and other factors that might affect contaminant migration and transformation (if known);

(3) Specific contaminant concentrations, if known;

(4) The horizontal and vertical velocity and direction of contaminant movement (if known);

(5) An extrapolation of future contaminant movement (if known); and

(6) The methods and criteria to be used to define the boundaries of the plume(s) of contamination;

(7) The parameters and constituents to be used to establish the presence or absence of a plume of contamination. This must include, but need not be limited to, specific hazardous constituents of wastes known or suspected to have been placed in the SWMUs;

(8) The basis for selecting the parameters and constituents in 7 above;

(9) The methodology for choosing sampling locations depths, and numbers of samples;

(10) Sampling procedures for each parameter or constituent to be analyzed;

(11) Analytical methods to be used in the analysis of the samples. If any of these methods are not identical to those specified in Test Methods for Evaluating Solid Waste, Physical/Chemical Methods, Third Edition (U.S. EPA SW-846), a complete description of the methods to be used and the justification for not using the SW-846 methods shall be provided; and

(12) Procedures and criteria for evaluating analytical results to establish the presence or absence of any plume of contamination.

3. Potential Receptors

If (1) a release to air or groundwater is detected, or (2) the Permittee(s) desires to establish site-specific soil cleanup objectives, then the subsequent RFI Phase Report must provide data describing the human populations and environmental systems within a radius of 1,500 feet of the facility boundary or SWMU, whichever provides the greatest distance that may be affected by releases from SWMUs must be collected and submitted to the Agency. The following characteristics shall be identified.

a. Local uses and possible future uses of groundwater:

(1) type of use (e.g. municipal or residential drinking water source, industrial, etc.); and

(2) Location of groundwater users, including wells and discharge areas.

b. Local uses and possible future uses of surface waters draining the facility:

(1) Domestic and municipal;

(2) Recreational;

(3) Agricultural;

(4) Industrial; and

(5) Environmental.

c. Human use of, or access to, the facility and adjacent lands, including, but not limited to:

(1) Recreation;

(2) Agriculture;

(3) Residential;

(4) Commercial;

(5) Zoning; and

(6) Location between population locations and prevailing wind direction.

d. A description of the biota in surface water bodies on, adjacent to, or affected by the facility.

e. A description of ecology of, and adjacent to the facility.

f. A demographic profile of the people who use or have access to the facility and adjacent land, including, but not limited to: age, sex, and sensitive subgroups.

g. A description of any endangered or threatened species near the facility.

4. Phase III - Hydrogeologic and Hydrologic Investigation

The potential for releases to groundwater from a given SWMU must be investigated as part of Phase III of the RFI if the Agency's DLPC determines from the data obtained during the RFI Phase II investigation that releases to soil from a given SWMU may have migrated to the groundwater below the site, or the data is inconclusive. The RFI Phase III hydrogeologic and geologic investigation plan must provide descriptions of groundwater monitoring systems which will provide adequate data on the detection, nature, extent and rate, and concentration of any releases to groundwater or surface water.

Groundwater monitoring will not be required for a SWMU during the RFI Phase III investigation, if the Permittee(s) can demonstrate, based upon the data obtained from the soils investigation under the RFI Phase I environmental media investigation that no releases have occurred from the SWMU(s), or, based upon the data obtained from the rate and extent evaluation under the RFI Phase II investigation that contaminants from the subject SWMU(s) have not entered the groundwater. The Agency reserves the right to require a groundwater monitoring program for SWMUs based upon interim or final corrective measures chosen.

If releases of hazardous waste or constituents, hazardous substance, agrichemicals or pesticides, have entered the groundwater at a particular SWMU, the RFI Phase III Workplan

shall address a hydrological investigation and groundwater monitoring for a SWMU or group of SWMUs at the time the Agency notifies the Permittee(s) that a RFI Phase III Workplan is required. This workplan must include:

Information, as it is available, regarding:

a. Information, as it is available, regarding:

(1) The regional geologic and hydrogeologic characteristics in the vicinity of the facility, including stratigraphy, hydrogeologic flow and the areas of recharge and discharge;

(2) Any topographic or geomorphic features that might influence the groundwater flow system;

(3) The hydrogeologic properties of all of the hydrogeologic units found at the site down to the first bedrock aquitard, including: hydraulic conductivity and porosity, texture, uniformity and lithology; an interpretation of hydraulic interconnections between saturated zones; and zones of significant fracturing or channeling in the unconsolidated and consolidated deposits;

(4) Using the facility map as a base, isopach and structural contour maps, and at least two (2) geologic cross sections showing the extent (depth, thickness, lateral extent) of all hydrogeologic units within the facility boundary, down to the first bedrock aquitard, identifying: all units in the unconsolidated and consolidated deposits; zones of higher permeability or lower permeability that might direct or restrict the flow of contaminants; perched aquifers; and the first saturated zone that may have a potential for migration of contaminants;

(5) The water level or fluid pressure monitoring, including: water level contour maps and vertical gradient sections, well or piezometer hydrographs and interpretation of the flow system, interpretation of any changes in hydraulic gradients, and seasonal fluctuation; and

(6) Any man-made influences that may affect the hydrogeology of the site, identifying local water supply and production wells and other man-made hydraulic structures within 1500 feet of the facility boundary.

b. Procedures for obtaining information identified in III.D.4.a above which was not obtained during preparation of the workplan.

c. Documentation that sampling and analysis of groundwater monitoring wells will be carried out in accordance with the approved Data Collection Quality Assurance Plan as required in III.F. below. The Plan shall provide information on the design and installation of all groundwater monitoring wells. The designs shall be in accordance with the latest version of the Technical Enforcement Guidance Document (TEGD), where appropriate, and the latest version of the Agency's DLPC design criteria. At a minimum:

(1) The groundwater monitoring wells must consist of monitoring wells installed in the uppermost aquifer and in each underlying aquifer (e.g., sand units) which are hydraulically interconnected;

(2) At least one background monitoring well in each aquifer shall be installed hydraulically upgradient (i.e., in the direction of increasing static head) from the limit of the SWMUs, except to the extent that SWMUs in close proximity can be investigated with the same background well system. The number, locations, and depths must be sufficient to yield groundwater samples that are: (a) representative of background quality in the uppermost aquifer and units hydraulically interconnected beneath the facility; and (b) not affected by SWMUs at the subject facility; and

(3) Monitoring wells in each appropriate aquifer shall be installed hydraulically downgradient (i.e., in the direction of decreasing static head) at the limit of the SWMU or at the limit of each group of proximate SWMUs. The number, locations and depths of the groundwater monitoring wells must ensure that they allow for detection of releases of hazardous waste or hazardous constituents from the SWMU(s).

d. A sampling plan which specifies:

(1) The parameters and constituents to be used to establish the presence or absence of a plume of contamination. These must include, but need not be limited to, specific hazardous constituents of wastes determined to have been placed in or released from the SWMUs (including any possible degradation products);

(2) The basis for selecting the parameters and constituents in (1) above;

(3) The methodology for investigating the hydrostratigraphic units at site, and the locations, depths, and concentration specifications for each monitoring well;

(4) Sampling procedures for each parameter or constituent to be analyzed, including sampling frequency;

(5) Analytical methods to be used in the analysis of the samples. If any of these methods is not consistent with those specified in Test Methods for Evaluating Solid Waste, Physical/Chemical Methods, Third Edition (U.S. EPA SW-846), a complete description of the methods to be used and the justification for not using the appropriate SW-846 methods will be provided; and

(6) Procedures and criteria for evaluating analytical results to establish the presence or absence of any plume of contamination.

If the Agency's DLPC determines from the data obtained during the Phase III investigation that releases of hazardous waste or constituents have occurred to the groundwater or that the data are inconclusive, the Permittee(s) must submit a Groundwater Monitoring Plan to determine the vertical and horizontal distribution of the contaminants identified and to predict the long-term disposition of any contaminants. This groundwater monitoring program must include proposals for establishing the locations, depths, and construction specifications for additional monitoring wells that may be necessary

to delineate the extent of any plume. The methodology of the investigation, the sampling procedures, analytical methods, and procedures for evaluating analytical results to establish the extent of the plume shall be the same as above unless specifically identified in the Phase III workplan. The Groundwater Monitoring Plan must also specify the criteria which will be used to determine the limits of the plume.

E. DATA COLLECTION QUALITY ASSURANCE

The Permittee(s) shall prepare a plan to document all monitoring procedures, sampling, field measurements, and sample analysis performed during the investigation so as to ensure that all information, data and resulting decisions are technically sound, statistically valid, and properly documented. This shall be submitted with each Phase Workplan.

Quality Assurance. Sampling methods and equipment, as well as laboratory analytical methods, shall follow guidance in U.S. EPA's SW-846, "Test Methods for Evaluating Solid Waste, Physical/Chemical Methods" Third Edition (see 40 CFR 260.11) if appropriate. All field sampling methods not included in SW-846 must be approved by the Agency's DLPC before they are used in the RFI. This includes methods such as drilling, borings, etc. When applicable, standard procedures, as defined by U.S. EPA, IEPA or ASTM, should be followed. All soil samples which are to be taken must be handled in accordance with 40 CFR, Part 261, Appendix III and the Agency's soil volatile sampling procedures if volatile sampling is required. The analytical methods which will be used must be specified and must be approved by the Agency before they are implemented.

F. DATA MANAGEMENT PLAN

The Permittee(s) shall develop and initiate a Data Management Plan to document and track investigation data and results. This Plan shall identify and set-up data documentation materials and procedures, project file requirements, and project-related progress reporting procedures and documents. The Plan shall also provide the format to be used to present the raw data and conclusions of the investigation(s). This plan shall be submitted with each Phase Workplan.

G. IMPLEMENTATION OF INTERIM MEASURES

At any time during the RFI the Permittee(s) may initiate interim measures for the purpose of preventing continuing releases and/or mitigating the results of releases and/or mitigating the migration of hazardous wastes or hazardous constituents. It may not be necessary to conduct all phases of the RFI investigation if the Agency's DLPC and the Permittee(s) agree that a problem can be corrected, or a release cleaned up, without additional study and/or without a formal, corrective measure study ("CMS").

The Permittee(s) shall submit an interim measures plan which describes any past or ongoing interim measures which have been or are to be undertaken to abate threats to human health and the environment to the Agency's DLPC for approval. This information shall include, at a minimum:

1. Objectives of the interim measures: how the measure is mitigating a potential threat to human health and the environment and/or is consistent with and integrated into any long term solution at the facility;

2. Design, construction, and maintenance requirements;

3. Schedules for design and construction; and

4. Schedules for interim measures progress reports.

If the Agency determines that a release cannot be addressed without additional study and/or a formal CMS then the Agency's DLPC will notify the Permittee(s) that these must be performed. Any proposal made under this provision or any other activity resulting from such proposal, including the invocation of dispute resolution, shall not affect the schedule for implementation of the RFI or of any other portion of the permit.

If the Agency determines that interim measures are necessary to protect human health or the environment, the Permittee(s) will be notified by way of a permit modification.

H. HEALTH AND SAFETY PLAN

Under the provisions of 29 CFR 1910 (54 Fed. Reg. 9295 (1989), cleanup operations must meet the applicable requirements of OSHA's

Hazardous Waste Operations and Emergency Response standard. These requirements include hazard communication, medical surveillance, health and safety programs, air monitoring, decontamination and training. General site workers engaged in activities that expose or potentially expose them to hazardous substances must receive a minimum of 40 hours of safety and health training off site plus a minimum of three days of actual field experience under the direct supervision of a trained experienced supervisor. Managers and supervisors at the site must have at least an additional eight hours of specialized training on managing hazardous waste operations. These requirements must be met during each phase of the RFI.

IV. IMPLEMENTATION OF RFI

The Permittee(s) shall conduct those investigations necessary to characterize the site, and to determine the nature, rate and extent of migration, and concentrations of hazardous waste or constituents, if any, released from the SWMU's into the surface water and sediments, groundwater, air, and soil. The investigations must be of adequate technical content to support the development and evaluation of a corrective action program, if one is deemed necessary by the Agency.

The investigation activities shall follow the plans and procedures set forth in the Workplan(s) and the RFI schedule. Any actual or anticipated deviations from the Workplan(s) or the RFI schedule shall be reported no later than the time of submission of the next quarterly report required by Section V subsequent to the determination of need or actual deviation from the Workplan.

V. SUBMISSION OF REPORTS AND RESULTS OF RFI ACTIVITIES

The Permittee(s) must prepare and submit quarterly progress reports and a final report on the activities and results of each Phase of the RFI activities as appropriate. The progress reports shall contain at a minimum:

1. An estimate of the percentage of the investigation completed;

2. Summary of activities completed during the reporting period;

3. Summaries of all actual or proposed changes to the Workplan or its implementation;

4. Summaries of all actual or potential problems encountered during the reporting period;

5. Proposal for correcting any problems;

6. Projected work for the next reporting period; and

7. Other information or data as requested in writing by the Agency's DLPC.

The workplans and reports which must be submitted to the Agency for review and approval in accordance with the schedule set forth in the following table:

RFI IMPLEMENTATION SCHEDULE

Facility Action	Due Date
Submission of RFI Phase I Workplan.	Within 120 days after effective date of the permit.
Completion of RFI Phase I investigation and submission of Phase I Report and Summary.	Within timeframes established by the Agency following review of the RFI Phase I Workplan.
Submission of RFI Phase II Workplan.	Within 90 days after notification of the need of Phase II by Agency's DLPC.
Completion of RFI Phase II investigation and submission of Phase II Report and Summary.	To be negotiated with the Agency's DLPC during review of Phase II workplan.

RFI IMPLEMENTATION SCHEDULE
(Con't)

Facility Action	Due Date
Quarterly Progress Reports	Must be received by Agency's DLPC no later than: January 15 of each year April 15 July 15 October 15
Submission of Implementation of Interim Measures Report.	Within 30 days from the date interim measures were determined by the Agency to be necessary.
Submission of RFI Phase III Workplan.	Within 90 days after notification of the need of Phase III by Agency's DLPC.
Completion of RFI Phase III Investigation and Submission of Phase III Report and Summary.	To be negotiated with the Agency's DLPC during review of Phase III Workplan.

ATTACHMENT G

APPROVED PERMIT SECTION IDENTIFICATION

Title	Latest Revision Date
SECTION A -- RCRA PART A APPLICATION [EPA FORM 8700-23 (01-90)]	12/22/92
SECTION B -- FACILITY DESCRIPTION	
B-1 General Description	02/15/91
B-2 Topographic Map	02/15/91
B-3 Location Requirements	06/10/91
B-4 Traffic Information	06/10/91
B-5 Operating Record	02/05/91
SECTION C - WASTE CHARACTERISTICS	
C-1 Chemical and Physical Analysis	08/14/92
C-1(i) Primary Physical and Chemical Treatment	06/10/91

Title	Latest Revision Date
C-1(ii) Specialized Pretreatment Prior To Primary Treatment	12/23/92
C-1(iii) Storage and Treatment of Listed Hazardous Wastes	12/23/92
C-1(iv) Stabilization and/or Fixation Prior To Off-Site Disposal	12/23/92
C-1(v) Storage and Transfer of Hazardous Waste Using Tanks and Containers	02/14/92
C-1(vi) Storage and Blending of Hazardous Waste Fuels	02/14/92
C-1(vii) Compacting of Hazardous Waste	12/28/92
C-1(viii) Treatment of D002 Liquid/Solid Mixtures	12/28/92
C-1a Containerized Waste	02/15/91
C-1b Waste in Tank Systems	02/15/91
C-1d Landfilled Waste	02/15/91
C-1e Wastes Incinerated and Used in Performance Tests	02/15/91
C-1f Wastes to be Land Treated	02/15/91
C-2 Waste Analysis Plan	02/15/91
C-2a Parameters and Rationale	06/10/91
C-2a(i) Waste Pre-qualification Procedures	06/10/91
C-2a(ii) Conformance Testing	06/10/91
C-2a(iii) Process Operation and Compatibility Testing	03/15/93

Title | Latest Revision Date

C-2b Test Methods 03/15/93

C-2c Sampling Methods 03/15/93

C-2d Frequency of Analysis 02/15/91

C-2e Additional Requirements for Wastes Generated Off-Site 02/15/91

C-2e(i) Bulk Transport Receiving Procedures 02/15/91

C-2e(ii) Container Receiving Procedures 02/15/91

C-2e(iii) Lab Packed Waste Receiving Procedures ... 02/15/91

C-2e(iv) General Waste Acceptance Criteria 02/15/91

C-2e(v) Nonconformance 03/15/93

C-2e(vi) Rejected Loads 02/14/92

C-2f Additional Requirements for Ignitable, Reactive or Incompatible Wastes 02/14/92

C-2g Waste Analysis Requirements for Land Disposal Restrictions (LDR) 02/15/91

C-3 Quality Assurance 02/15/91

SECTION D -- PROCESS INFORMATION

Introduction .....

D-1 Containers 02/14/92

D-1(i) Overview of Drum Management Activities 02/14/92

A. Existing Container Storage Area 02/14/92

B. Proposed Outdoor Container Storage Area 02/14/92

C. Proposed Lab Pack Repack Area 02/14/92

Title | Latest Revision Date

D. Proposed Fuel Blending Operation 02/14/92

E. Proposed Drum Crushing & Compaction Area 02/14/92

F. Proposed Rail Car Transfer Operation 02/14/92

G. Mobile Waste Compactor 02/14/92

H. Proposed Treatment of D002 Liquid/Solid Mixtures 12/23/92

I. Proposed Non-Hazardous Waste Drum Storage/Consolidation Area 12/23/92

J. Proposed Aerosol Can Compactor 12/23/92

D-1(ii) Roll-off Container Management Activities 12/23/92

D-1a Containers With Free Liquids .....

D-1a(1) Description of Containers 02/14/92

D-1a(2) Container Management Practices 02/14/92

D-1a(3) Secondary Containment System Design and Operation 02/14/92

D-1a(3)(a) Requirement for the Base or Liner to Contain Liquids .. 02/14/92

D-1a(3)(b) Containment System Drainage 02/15/91

D-1a(3)(c) Containment System Capacity 06/10/91

D-1a(3)(d) Control of Run-On 06/10/91

D-1a(3)(e) Removal of Liquids from Containment System 06/10/91

D-1b Containers Without Free Liquids 02/14/92

D-2 Tank Systems .....

D-2a(1) Assessment of Existing Tank System's Integrity 02/15/91

Title | Latest Revision Date

D-2a(2) External Corrosion Protection 02/15/91

D-2b New Tank Systems 02/14/92

D-2c Dimensions and Capacity of Each Tank 02/14/92

D-2d Description of Feed Systems, Safety Cutoff, Bypass Systems and Pressure Controls 02/14/92

D-2e Diagram of Piping, Instrumentation and Process Flow for Each Tank System 02/14/92

D-2f Containment and Detection of Releases 02/14/92

D-2g Controls and Practices to Prevent Spills and Overflows 02/14/92

D-3 Waste Piles 02/14/92

D-4 Surface Impoundments 02/14/92

D-5 Trial Burns 02/14/92

D-6 Landfills 02/14/92

D-7 Land Treatment 02/14/92

SECTION E -- GROUNDWATER MONITORING

E-1 Exemption from Groundwater Protection Requirements 02/15/91

SECTION F -- PROCEDURES TO PREVENT HAZARDS

F-1 Security .....

F-1a Security Procedures and Equipment 02/15/91

F-1a(1) 24-hour Surveillance System 02/15/91

F-1a(2) Barrier and Means to Control Entry 02/15/91

Title	Latest Revision Date
F-1a(1)(a) Barrier	02/14/92
F-1a(2)(b) Means to Control Entry	02/14/92
F-1a(3) Warning Signs	02/14/92
F-1b Waiver	02/14/92
F-2 Inspection Schedule	02/14/92
F-2a General Inspection Requirements	02/15/91
F-2b Specific Process Inspection Requirements	02/15/91
F-2b(1) Container Inspection	02/15/91
F-2b(2) Tank System Inspections	02/15/91
F-2b(2)(a) Tank Construction Materials	02/15/91
F-2b(2)(b) Tank Surrounding Area	02/15/91
F-2b(2)(c) Tank Overfilling Control Equipment	02/15/91
F-2b(2)(d) Tank Monitoring Data	06/10/91
F-2b(2)(e) Tank Level of Waste	06/10/91
F-2b(2)(f) Tank Condition Assessment for Unretrofitted Tanks	06/10/91
F-2b(3) Waste Pile Liner Inspection	06/10/91
F-2b(4) Waste Pile Inspection	06/10/91
F-2b(5) Surface Impoundment Inspection	06/10/91
F-2b(6) Incinerator Inspection	06/10/91
F-2b(7) Landfill Inspection	06/10/91
F-2b(8) Land Treatment Facility Inspection	06/10/91

Title	Latest Revision Date
F-3 Waiver or Documentation of Preparedness and Prevention Requirements	
F-3a Equipment Requirements	
F-3a(1) Internal Communications	02/15/91
F-3a(2) External Communications	02/15/91
F-3a(3) Emergency Equipment	02/15/91
F-3a(4) Water for Fire Control	03/15/93
F-3b Aisle Space Requirements	03/15/93
F-4 Preventive Procedures, Structures and Equipment	
F-4a Unloading Operations	03/15/93
F-4b Run-Off	03/15/93
F-4c Water Supplies	03/15/93
F-4d Equipment and Power Failure	06/10/91
F-4e Personnel Protection Equipment	06/10/91
F-5 Prevention of Reaction of Ignitable, Reactive or Incompatible Wastes	
F-5a Precautions to Prevent Ignition or or Reaction of Ignitable or Reactive Wastes	06/10/91
F-5b General Precautions for Handling Ignitable or Reactive Waste and Mixing of Incompatible Waste ...	02/14/92
F-5c Management of Ignitable or Reactive Wastes in Containers	02/14/92
F-5d Management of Ignitable or Reactive Wastes in Containers	02/14/92
F-5e Management of Ignitable or Reactive Wastes in Tank Systems	06/10/91

Title	Latest Revision Date
F-5f Management of Incompatible Wastes in Tank Systems	06/10/91
F-5g Management of Ignitable or Reactive Wastes Placed in Waste Piles	02/15/91
F-5h Management of Incompatible Wastes Placed in Waste Piles	02/15/91
F-5i Management of Ignitable or Reactive Wastes in Surface Impoundments	02/15/91
F-5j Management of Incompatible Wastes Placed in Surface Impoundments	02/15/91
F-5k Management of Ignitable or Reactive Wastes in Landfills	02/15/91
F-5l Management of Incompatible Wastes Placed in Landfills	02/15/91
F-5m Management of Ignitable or Reactive Wastes in Land Treatment Units	02//15/91
F-5n Management of Incompatible Wastes Placed in Land Treatment Units	02/15/91
SECTION G -- CONTINGENCY PLAN	
G-1 General Information	12/23/92
G-2 Emergency Coordinators	02/14/92
G-3 Implementation	02/14/92
G-4 Emergency Response Procedures	
G-4a Notification to Federal, State, and Local Officials	07/16/92
G-4b Identification of Hazardous Materials	02/14/92

Title		Latest Revision Date
G-4c	Assessment	02/14/92
G-4d	Control Procedures	02/14/92
	G-4d(1) Fire and/or Explosion	06/10/91
	G-4d(2) Release to Air, Soil, or Surface Water	06/10/91
	G-4d(3) Equipment Failure or Power Outages	02/14/92
G-4e	Prevention of Recurrence or Spread of Fires, Explosions or Releases	02/14/92
G-4f	Storage and Treatment of Released Material	02/14/92
G-4g	Incompatible Waste	02/14/92
G-4h	Post Emergency Equipment Maintenance	02/14/92
G-4i	Container Spills and Leaks	02/14/92
G-4j	Tank System Spills and Leaks	02/14/92
	G-4j(1) Tank System Spills and Leakage	02/14/92
	G-4j(2) Spills and Leaks from Tanks Containing Particular Chlorinated Dioxins, Dibenzofurans, and Phenols	02/14/92
G-4k	Waste Pile Spills and Leakage	02/14/92
G-4l	Surface Impoundment Spills and Leakage	02/14/92
G-4m	Incinerator Spills and Leakage	02/14/92
G-4n	Landfill Leakage	02/14/92
G-5	Emergency Equipment	02/14/92
G-6	Coordination Agreement Requirements	02/14/92
G-7	Evacuation Plan	02/14/92

Title	Latest Revision Date
G-8 Required Reports	02/14/92
SECTION H -- PERSONNEL TRAINING	
H-1 Outline of the Training Program	02/15/91
H-2 Implementation of Training Program	02/14/92
SECTION I -- CLOSURE AND POST-CLOSURE REQUIREMENTS	
I-1 Closure Plans	
I-1a Closure Performance Standard	06/10/91
I-1b Partial Closure Activities	06/10/91
I-1c Maximum Waste Inventory	06/10/91
I-1d Inventory Removal, Disposal, or Decontamination of Equipment, Structures, and Soils	06/10/91
I-1d(1) Closure of Containers	02/14/92
I-1d(2) Closure of Tank Systems	02/14/92
I-1d(3) Closure of Waste Piles	02/15/92
I-1d(4) Closure of Surface Impoundments	02/15/92
I-1d(5) Closure of Incinerators	02/15/91
I-1d(6) Closure of Land Treatment Facilities	02/15/91
I-1e Closure of Disposal Units	02/15/91
I-1f Schedule for Closure	02/15/91
I-1g Extensions of Closure Time	02/15/91

Title	Latest Revision Date
I-2 Post-Closure Plan	12/23/92
I-3 Notice in Deed and Certification	12/23/92
I-4 Closure Cost Estimate	12/23/92
I-5 Financial Assurance Mechanism for Closure	12/23/92
I-6 Post Closure Cost Estimate	12/23/92
I-7 Financial Assurance Mechanism for Post Closure	12/23/92
I-8 Liability Requirements	02/14/92
SECTION J -- OTHER FEDERAL LAWS	
SECTION K -- PART B CERTIFICATION	
K-1 Facility Certification	06/10/91
K-2 Engineering Certification	06/10/91
SECTION L -- CONTINUING RELEASES AT PERMITTED FACILITIES	
L-1 Solid Waste Management Units	02/15/91
L-2 Releases	02/15/91
SECTION M -- RESEARCH, DEVELOPMENT, AND DEMONSTRATION PERMITS	02/15/91
SECTION N -- RCRA PART B CERTIFICATION	02/15/91
SECTION O -- PRIOR CONDUCT CERTIFICATIONS AND FACILITY COMPLIANCE HISTORY	02/14/92

List of Tables — Latest Revision Date

B-1. Map Requirements 02/15/91

C-1. Primary Treatment Using Chemical Precipitation, Coagulation, and Filtration 06/10/91

C-2. Pretreatment Using Neutralization 06/10/91

C-3. Pretreatment Using Chemical Oxidation 06/10/91

C-4. Pretreatment Using Chemical Reduction 06/10/91

C-5. Pretreatment by Other Methods 06/10/91

C-1a. Primary Treatment of Non-Hazardous Wastes Using Chemical Precipitation,, Coagulation, and Filtration 06/10/91

C-2a. Pretreatment of Non-Hazardous Wastes Using Neutralization 06/10/91

C-3a. Pretreatment of Non-Hazardous Wastes Using Chemical Oxidation 06/10/91

C-4a. Pretreatment of Non-Hazardous Wastes Using Chemical Reduction 06/10/91

C-5a. Pretreatment of Non-Hazardous Wastes By Other Methods 06/10/91

C-6. Pretreatment Using Oil Recovery 02/14/92

C-7. Listed Waste Treatment Process 12/23/92

C-8. Stabilization/Fixation Prior to Off-Site Disposal 02/14/92

C-9. Wastes for Storage and Transfer 02/14/92

C-10. Hazardous Waste Fuel Blending 03/15/93

C-11. Hazardous Characteristics of Wastes in Tank Systems 02/15/91

List of Tables | Latest Revision Date

C-12. Pre-acceptance and Conformance Testing Parameters 06/10/91

C-13. List of Supplemental Analyses 02/15/91

C-14. Analytical Methods 02/14/92

C-15. Sampling Methods 02/15/91

D-1. Summary of Existing or Proposed Container Management Units 02/14/92

D-2. Roll-off Container Management Areas 02/14/92

D-3. Physical Data for Existing Tanks 02/14/92

D-4. Operating Data for Existing Tanks 02/14/92

D-5. Physical Data for Proposed Tanks 03/15/93

D-6. Operating Data for Proposed Tanks 03/15/93

D-7. General Container Information 06/10/91

D-8. List of Reagents Used in Waste Treatment Processes 03/15/93

F-1. Inspection Schedule ..... Undated

F-2. General Facility Inspection -- Key Inspection Elements 02/15/92

F-3. Unit Specific Inspection -- Key Inspection Elements 02/15/91

F-4. Protective Equipment Guide 06/10/91

F-5. List Of Loading/Unloading Areas 03/15/91

G-1. List of Emergency Coordinators 07/16/92

G-2. List Of Coordination Agreements 07/16/92

G-3. Emergency Equipment Capabilities 02/15/91

List of Tables | Latest Revision Date

H-1. Training Program Outline 02/15/91

H-2. Training Topics ..... Undated

I-1. Capacity of Existing/Proposed Hazardous Waste Storage/Treatment Units 02/14/92

I-2. Closure Timeline 02/14/92

List of Appendices	Latest Revision Date
B-1. CHCI Drawing No. 4200, Issue A - Site Location and Surrounding Land Use	09/19/90
B-2. CHCI Drawing No. 4201, Issue C - Flood Plain and Site Plan	02/14/92
B-3. CHCI Drawing No. 4202, Issue C - Site Plan and Topography	02/14/92
B-4. CHCI Drawing No. 4203, Issue C - Site Plan Existing Facilities	02/14/92
B-5. CHCI Drawing No. 4204, Issue C - Site Plan Existing, Approved and Proposed Facilities & Operations	02/14/92
B-6. City of Chicago Zoning Ordinance, Page Nos. 227B, 228B, 234B, and 235B. Amended January 1, 1971	Undated
B-7. Legal Description and Survey, Clean Harbors of Chicago, Inc., Drawing No. N-116032, prepared by National Survey Services, Inc.	Undated
B-8. CHCI Drawing No. 4223, Issue A - Wind Rose	09/19/90
B-9. Seismic Survey	01/24/91
B-10. Vicinity/Access Maps	Undated
B-11. Stony Island Avenue Construction Upgrade	05/89
B-12. Roadway Analysis	01/24/91
B-13. Stony Island Avenue Construction Details	Undated
C-1. Typical Waste Analyses	Undated
C-2. Laboratory Equipment	Undated
C-3. Treatability Study Data for Oxidation of Organic Compounds	Undated

List of Appendices	Latest Revision Date
C-4. Treatability of Organic Compounds Using Carbon Adsorption	Undated
C-5. Treatability Study Data for Stabilization/Fixation of Wastes	05/28/92
D-1. Process Descriptions for Existing and Proposed Activities at Clean Harbors of Chicago, Inc.	02/15/91
D-2. CHCI Drawing no. 4209, Sheet 1 of 2, Issue B - Existing Drum Storage Layout Building No. 2	02/01/91
D-3. CHCI Drawing No. 4209, Sheet 2 of 2, Issue B - Existing Drum Storage Layout Building No. 2	02/01/91
D-4. CHCI Drawing No. 4210, Issue B - Approved and Proposed Container Management area Layout and Details	02/14/92
D-5. Direct Design Limited Dwg. No. A1 - Containers Outdoor Storage Area Phase II - Foundation Detail	03/20/91
D-6. Direct Design Limited Dwg. No. A2 - Containers Outdoor Storage Area Phase I - Building Elevations	03/20/91
D-7. Direct Design Limited Dwg. No. A3 - Containers Outdoor Storage Area Phase I - Foundation/Floor Plan	03/19/91
D-8. Direct Design Limited Dwg. No. A4 - Containers Outdoor Storage Area Phase I - Foundation Details	03/20/91
D-9. Direct Design Limited Dwg. No. A5 - Containers Outdoor Storage Area Phase II - Foundation/Floor Plan	Rec'd 03/20/91
D10. Direct Design Limited Dwg. No. a6 - Containers Outdoor Storage Area Phase II - Building Elevations	Rec'd 03/20/91

List of Appendices — Latest Revision Date

D-11. CHCI Dwg. No. 4211, Issue C - Proposed Lab Pack Repack and Consolidation Area Details 02/14/92

D-12. CHCI Dwg. No. 4228, Issue B - Proposed Lab Pack Repack and Consolidation Area Elevations 02/14/92

D-13. CHCI Dwg. No. 4213, Sheet 2 of 3, Issue D - Equipment Layout - Proposed Fuels Blending Operation .. 12/18/92

D-14. CHCI Dwg. No. 4212, Issue B - Equipment Layout - Proposed Drum Crushing and Compacting Operation 02/14/92

D-15. CHCI Dwg. No. 4217, Issue B - Proposed Rail Car Containment Area Details 01/28/92

D-16. CHCI Dwg. No. 4218, Issue C - Bulk Solids and Medical Waste Storage Pad Details 05/16/91

D-17. Container Management Guidelines ..... Undated

D-18. Technical Specification for Coating Systems ..... Undated

D-19. Professional Engineer (PE) Certification of the Construction of the Existing Container Storage Area 01/08/91

D-20. CHCI Dwg. No. 4208, Issue A - Equipment Layout Existing Facilities 09/19/90

D-21. CHCI Dwg. No. 4205, Sheet 1 of 2, Issue B - Process Flow, Piping and Instrumentation Diagram - Existing Operations 09/19/90

D-22. CHCI Dwg. No. 4205, Sheet 2 of 2, Issue B - Process Flow, Piping and Instrumentation Diagram - Existing Operations 02/01/91

D-23. CHCI Dwg. No. 4206, Issue B - Piping and Instrumentation Diagram - Air Pollution Control Systems for Existing Operations 02/01/91

List of Appendices	Latest Revision Date
D-24. Construction Details for Existing Waste Receiving Tanks	09/02/80
D-25. Construction Details for Existing Bulk Storage Tanks	12/17/80
D-26. CHCI Dwg. No. 4214, Issue A - Existing Tank Farm Details	09/19/90
D-27. Chem Clear Dwg. No. M-0012-E: Design Details, Existing Chemical Treatment Unit	09/15/81
D-28. Chem Clear Dwg. No. M-0010-D: Design Details, Existing Clarifier Internal Assembly	03/26/81
D-29. Design Details, Existing Secondary Treatment Tanks, Sheet Nos. 1 through 4	Undated
D-30. R.A. Morley Co. Dwg. No. 4033-D: Design Details, Existing Sludge Sump	09/02/80
D-31. Chem Clear Dwg. No. 4068-C: Design Details, Existing Sludge Conditioning Tank	02/03/88
D-32. Clean Harbors Dwg. No. 2916-M-01: Existing Reactor Vessel Details	Undated
D-33. Chem Clear Dwg. No. 4062-C: Modifications in Effluent Holding Tank	09/12/88
D-34. Chem Clear Dwg. No. 4034-D: Tank Details Oily Waste Water Pretreatment	11/02/83
D-35. Design Details, Waste Storage Tank	Undated
D-36. Professional Engineer (PE) Certification of Assessment of the Integrity of the Existing Tank Systems	06/10/91
D-37. CHCI Dwg. No. 4219, Issue C - Proposed Sludge Conditioning Tank Details	06/16/91
D-38. CHCI Dwg. No. 4231, Issue B - Reactor Vessel Installation and Secondary Containment Plan and Details	05/16/91

List of Appendices — Latest Revision Date

D-39. CHCI Dwg. No. 4213, Sheet 1 of 3, Issue C - Equipment Layout - Proposed Operations 02/14/92

D-39A. CHCI Dwg. No. 4213, Sheet 3 of 3, Issue A - Equipment Layout - Proposed Operations 02/14/92

D-40. CHCI Dwg. No. 4207, Sheet 1 of 3, Issue A - Process Flow, Piping and Instrumentation Diagram - Proposed Operations 02/01/91

D-41. CHCI Dwg. No. 4207, Sheet 2 of 3, Issue B - Process Flow, Piping and Instrumentation Diagram - Approved and Proposed Operations 02/01/91

D-42. CHCI Dwg. No. 4229, Issue B - Proposed Process Building No. 3 Plan, Sections, Details 02/14/92

D-43. CHCI Dwg. No. 4230, Issue B - Proposed Process Building No. 3 Elevations 02/14/92

D-44. CHCI Dwg. No. 4216, Issue D - Proposed Listed Wastes Storage/Transfer Farm Details 02/14/92

D-45. CHCI Dwg. No. 4207, Sheet 3 of 3, Issue D - Process Flow, Piping and Instrumentation Diagram - Proposed Fuels Blending Operations 12/18/92

D-46. CHCI Dwg. No. 4215, Issue D - Proposed Flammable Storage Tank Farm Details 02/14/92

D-47. Structural Design and Secondary Containment Calculations for Proposed Units 06/06/91

D-48. Subsurface Investigation Report, O'Brien & Associates, Inc., June 1991 ..... 06/91

D-49. Professional Engineer (PE) Assessment and Certification of the Design of New Tank Storage System..... 06/03/91

D-49A. Professional Engineer (PE) Assessment and Certification of the Design of Pegasus Tank Processing System 06/03/91

List of Appendices	Latest Revision Date
D-50. Pegasus Fuel Blending System Operations Manual	01/09/92
D-51. CHCI Dwg. No. 4235, Issue B - Control Panel Face Layout Drum Processing	02/14/92
D-52. CHCI Dwg. No. 4236, Issue B - Control Panel Face Layout Drum Processing	02/14/92
D-53. CHCI Dwg. No. 4237, Issue B - Drum Processing System Schematic	12/18/92
D-54. CHCI Dwg. No. 4238, Issue B - Enclosure Vacuum, Fire Prevention and Suppression	12/18/92
D-55. CHCI Dwg. No. 4239, Issue B - Drum Movement Isometric	12/18/92
D-56. CHCI Dwg. No. 4240, Issue B - Simplified Process Flow and Material Balance	12/18/92
D-57. CHCI Dwg. No. 4241, Issue B - Waste Liquid Piping Schematic	12/18/92
D-58. Sample Labels/Markings	02/14/92
D-59. Professional Engineer (PE) Assessment and Certification of the Design of Proposed Container Storage Areas	12/11/92
D-60. Manufacturer's Literature for Mobile Waste Compactor	Undated
D-61. CHCI Dwg. No. 4234, Issue A - Proposed Truck Loading Dock & Truck Sampling Pad Details	02/14/92
D-62. Clean Harbors of Chicago, Inc., Proposed Non-Hazardous Drum Storage & Bulking Area Layout, CHCHI Dwg No. 4266 (Issue A)	10/13/92

List of Appendices	Latest Revision Date
D-63. Clean Harbors of Chicago, Inc., Site Plan Proposed Non-Hazardous Drum Storage & Bulking Area, CHCI Dwg. No. 4266 (Issue A)	10/13/92
D-64. Manufacturer's Literature, Aerosol Compaction System	Undated
D-65. Minimum Tank Thickness Calculations	03/15/93
F-1. Confined Space Entry Procedures	Undated
F-2. Personal Protective Equipment Program	03/90
F-3. Medical Waste Health/Safety Control Plan	10/90
F-4. Equipment and Procedures for Transfer of Flammable Liquids	Undated
F-5. 25-Year, 24-Hour Rainfall Chart, Excerpted from the US Department of Commerce Frequency Atlas of the United States	Undated
F-6. Fire Control analysis, prepared by Gage Babcock & Associates, Inc., for Clean Harbors of Chicago, Inc.	02/13/92
F-7. Professional Engineer (PE) Assessment and Certification of the Design of Railcar Containment Basins	02/13/92
F-8. Manufacturer's Literature for Steel Railcar Containment Pans	Undated
F-9. Secondary Containment Calculations for Loading/Unloading Areas	03/10/93
F-10. 25-Year, 24-Hour Rainfall Map	Undated
G-1. CHCI Dwg. No. 4221, Issue C - Emergency & Safety Equipment Location Plan	02/14/92
G-2. CHCI Drawing No. 4220, Issue B - Evacuation Plan	02/14/92
G-3. Anticipated Hazards at Clean Harbors of Chicago, Inc.	02/14/92

List of Appendices		Latest Revision Date
G-4.	CHCI Drawing No. 4204, Issue C - Site Plan Existing, Approved and Proposed Facilities & Operations	02/14/92
G-5.	Documentation of Emergency Coordination Agreements	05/03/91
G-6.	Air Emission Study, Prepared by Carlson Environmental, Inc. for Clean Harbors of Chicago, Inc.	05/03/91
H-1.	Job Descriptions/Job Titles	10/90
H-2.	Professional Resumes	Undated
H-3.	CHCI Training Documentation Form	Undated
H-4.	CHCI Personnel Training Summary, as of January 14, 1992	Undated
I-1.	Closure Cost Calculations	03/15/93
I-2.	Certificate of Liability Insurance	Undated
J-1.	Existing Air Pollution Control Permits	12/20/90
J-2.	Existing Water Pollution Control Permits	07/31/90
K-1.	Facility Certification	02/14/92
K-2.	Certification by Professional Engineer	03/12/93
L-1.	Illinois EPA Operating Permits	02/15/91
L-2.	Release Reports	02/15/91
O-1.	Clean Harbors, Inc. SEC 10K Form	Undated
O-2.	Description of Violations of Federal, State, or Local laws, Regulations, or Ordinances	01/10/91
O-3.	Prior Conduct Certification forms	02/14/92

LWE:MAS:lat/sp/229Y,1-90

ATTACHMENT H

FINANCIAL ASSURANCE REQUIREMENTS

0316000051

Specific Unit	Financial Assurance Required for Unit (Dollars)
Existing Units	
Building No. #2 (indoor drum storage)	$41,050
Outdoor drum storage area	$264,470
Pour Off Area	$4,081
	$309,601
Proposed Units	
Lab Pack Area	$21,402
Fuel Blending Area	$18,638
Listed Waste Tank Farm and Loading Pad	$209,264
Listed Waste Process Building	$474,466
Bulk Solids Storage Area	$70,037
Outdoor Drum Storage Area	$209,116
Flammable Storage Tank Farm and Loading Area	$189,952
	$792,875

Financial Assurance for the the amounts above shall be submitted 60 days prior to placing wastes in the unit.

P.I. file
U.S. EPA

!Document 0062Z, page 8
!(App 7 - Admin. Record P.I. Checklist)

First Stage Submittal 9/7/93
Second Stage Submittal 11/12/93

ADMINISTRATIVE RECORD

PUBLIC INVOLVEMENT CHECKLIST

U.S. EPA must have copies of the following items for each RCRA/HSWA permit.

FACILITY Clean Harbors of Chicago, Inc./Chicago

- ✓ Public Notice/Hrg. Sched.
- ✓ Newspaper tearsheet and voucher or affidavit of publications*
- ✓ Radio announcement, copies of cover letter for each radio station
- ✓ Cover letters (legislators, concerned citizens, etc.)*
- ✓ Dated mailing list
- NA Copy of radio announcement verification cards (when available)
- ✓ Repository cover letter*
- ✓ Verification that materials were received by repository location
- ✓* Press release or evidence of any other public participation activity
- ✓ Public hearing transcript (if appropriate)*
- ✓ Public comment(s) (Copy of comments or listing of where comments may be found)* Does not include facility comments
- → ✓ Response summary (if appropriate)*
- → ✓ Final permit issuance or denial notice

ADDITIONAL COMMENTS:

✓* Press clips from Southtown Economist & the Times
Arranged and attended CWM Community Oversight Committee tour of Clean Harbors' facility

*Items U.S.EPA requires before signing permit.

State of Illinois
ENVIRONMENTAL PROTECTION AGENCY

Mary A. Gade, Director

2200 Churchill Road, Springfield, IL 62794-9276

FINAL DECISION NOTICE

The Illinois Environmental Protection Agency provides notice pursuant to 35 Ill. Adm. Code 705.201 (c), that a final RCRA/HSWA hazardous waste permit was issued to the Clean Harbors facility in Chicago on September 30, 1993.

The applicant may petition the Illinois Pollution Control Board to contest this permit decision pursuant to 35 Ill. Adm. Code 705.212. Provisions of the U.S. EPA permit decision may be appealed to the Environmental Appeals Board in Washington D.C. pursuant to 40 CFR 124.19.

The deadline to appeal the IEPA permit decision is November 4, 1993.
The deadline to appeal the U.S. EPA permit decision is October 30, 1993.

For additional information on the appeal process or to receive a copy of the RCRA/HSWA permit decision or the IEPA response to comments, please contact:

Illinois Environmental Protection Agency
Office of Community Relations
Attention: Mara McGinnis - #5
2200 Churchill Road
P.O. Box 19276
Springfield, Illinois 62794-9276
phone: 217/782-5562

Printed on Recycled Paper

RCRA/HSWA Permit Response Summary

September, 1993

In the Matter of: **Clean Harbors of Chicago, Inc.**
RCRA/HSWA Hazardous Waste Management
Permit (IEPA Hearing File #219-93).

On September 30, 1993 the state and federal Environmental Protection Agencies issued a RCRA/HSWA permit to both Clean Harbors of Chicago, Inc. as operator and the Illinois International Port District as property owner. This permit allows Clean Harbors to continue its hazardous waste management activities at 11800 South Stony Island Avenue, Chicago, Illinois. The permit sets very stringent standards for the handling, storage and treatment of hazardous wastes at the plant in order to protect human health and the environment. The permit conditions are based upon an extensive review of technical and legal requirements and comments received from the facility and citizens in the Southeast Chicago area.

This Response Summary includes descriptions of the historical background of the Clean Harbors facility area, the RCRA/HSWA permit background, public involvement activities associated with the permit process, citizen comments expressed during the process and agency responses to comments, and other related information. Further details can be obtained by contacting the agency personnel listed at the end of this document.

History of the Area

The following history is condensed from Dr. Craig Colten's extensive study, Industrial Wastes in the Calumet Area, 1869-1970: An Historical Geography, September, 1985, for the Illinois Department of Energy and Natural Resources. Dr. Colten's work is greatly appreciated.

Once a low, marshy wetland, developers in the 1860's saw the area surrounding Lake Calumet as a potential Chicago industrial center. Modifications of the Calumet River by the Army Corps of Engineers in 1869 opened the area to intense industrial development, including the production of metals, chemicals, paints, building materials and other associated products. Records indicate that 35 industries had located there by 1897 and by 1960 the number had increased to 117. Residential areas began to spring up around the industries in the 1870's for convenient access to the workplaces. Neighborhood construction continued through the 1930's as companies recruited Polish, Italian, Serbo-Croatian and Mexican workers.

Industrial wastes, dredged materials and urban biological wastes were disposed of in the nearby low-lying areas and directly into the waterways. Environmental awareness awakened in the 1940's but the courts were unable to stop the disposal of untreated industrial wastes into the Calumet River until 1970. Land disposal continued after that time.

Today southeast Chicago is still plagued by numerous old dump sites scattered around Lake Calumet but few of the original industries still survive. Numerous citizen groups have joined forces to seek remedies to the environmental and economic problems of southeast Chicago.

Background

"RCRA" stands for the Resource Conservation and Recovery Act, the federal law that regulates the treatment, storage and disposal of hazardous wastes. Congress passed RCRA in 1976 and expanded the RCRA program in 1984 by passing the Hazardous and Solid Waste Amendments ("HSWA"). The Illinois Environmental Protection Agency ("IEPA") and the U.S. Environmental Protection Agency ("U.S. EPA") jointly administer the RCRA/HSWA program in Illinois.

The primary feature of the RCRA/HSWA is a permitting program which applies the federal hazardous waste management regulations to the operations of each individual facility. The first step in achieving that goal was for existing industries to submit Part A of their hazardous waste permit applications to the U.S.EPA. Facilities that submitted Part A by 1980 were allowed to continue operating if they followed the "interim status" standards. These standards required facilities all over the country to manage similar hazardous wastes by the same standards. The second stage in that permitting process is the submittal of Part B of the permit application. If the application is adequate, a tailor-made set of operating requirements called a RCRA permit (also called a RCRA Part B permit) is drafted and proposed for public information and comment. After the comment period is closed, a written response to comments is prepared and a final permit decision is made.

RCRA/HSWA permits for hazardous waste facilities nationwide have many similar requirements, but each permit is specially tailored to each facility. Among the general conditions included in these permits are waste analysis plans, site inspection requirements, emergency response or "contingency" plans, employee safety training, minimum site engineering standards, and financial responsibility. Specific conditions are also added to the permits dependent upon site conditions and facility type.

The RCRA/HSWA permit is a tool the IEPA and U.S.EPA use to communicate to the facility and the public the regulations and specific conditions that apply to the facility's hazardous waste operations. The permit is also an effective enforcement tool that gives the agencies authority to take legal action if the permit conditions are violated. If U.S.EPA or IEPA find that a facility is not complying with permit conditions, the facility is required to correct the violation and if any release has occurred, clean up the hazardous substances. The agencies may issue an order that spells out what actions the owner must take and includes a schedule to bring the facility into compliance. The owner may be fined, and the facility may be shut down if the violations are not corrected.

How Permit Decisions Are Made

The owner of an existing or proposed facility must submit a comprehensive application that covers all aspects of design, operation, and maintenance of the facility. The properties of the waste that the facility will handle must be described in detail. The information included in the application is specific to the hazardous wastes, the processes to be used at the facility, and the characteristics of the facility's location. There is no standard form for the application but "guidance" (directions) from the federal government identifies information that must be included.

Next, U.S.EPA and IEPA review the application for completeness; if any information is missing, inaccurate, or incomplete, the applicant must revise the application. When complete, the application is reviewed on its technical merits to determine whether it meets the requirements of both state and federal law. If the application does not meet the requirements of the law, the agencies prepare a document stating the reasons for the tentative denial. If the application is adequate, the agencies prepare a draft permit for the facility. In either case, the IEPA gives the public notice by direct mailing and newspaper advertisements, of its tentative decision and a minimum 45-day public comment period is opened. The comment period is held to give interested citizens an opportunity to review and comment on the decision. In many cases, a public hearing is also held to accept citizens' comments.

After considering all comments and concerns, any necessary revisions are made, and the two agencies issue a final permit decision. A summary of the public's comments and the Agencies' responses is made available when the final decision is announced.

Permit Issuance Appeal Process

Upon issuance of the IEPA's final permit decision, there is a 35 day period between the date of issuance and the effective date. If Clean Harbors of Chicago, Inc. does not file an appeal to the Illinois Pollution Control Board ("Board") within that 35 day period, the permit becomes effective on the 35th day. In the event an appeal is filed by the applicant, the effective date of the permit and all permit conditions are stayed until the appeal is concluded, unless the Board orders otherwise (35 Ill. Admin. Code 705.203). Procedures for appeal of the IEPA's final decision are located in 35 Ill. Admin. Code 705.212.

Appeals of the U.S.EPA portion of the final permit may be filed within 30 days of issuance by anyone who provided comments on the draft permit (40 CFR 124.19). Appeals may be filed with the Environmental Appeals Board; 401 M. Street, Southwest; Washington, D.C. 20460. For more information on filing an appeal with the Environmental Appeals Board, please call the Clerk at 202/501-7060.

The Clean Harbors of Chicago Facility

The Clean Harbors facility at 11800 So. Stony Island currently stores and treats water-based hazardous wastes in an on-site wastewater treatment system. The facility also stores, consolidates, and transfers off-site, containerized hazardous and non-hazardous wastes including laboratory-packed wastes ("lab-packs").

The existing treatment processes for these wastewaters may include chemical oxidation, neutralization of concentrated acids and bases, pH or chemical adjustment to selectively precipitate certain metals out of the wastewaters, and/or precipitation of other suspended solids to render hazardous wastes non-hazardous. These hazardous waste management activities have been conducted under interim status standards since November of 1980.

New operations and equipment are proposed by the facility and regulated by this permit. They include:

1) A new bulk tank storage system and treatment operation for "listed" hazardous waste liquids and solids;

2) A new bulk tank storage system and fuel blending operation to produce and store organic-based hazardous waste fuels which will be shipped off-site for energy recovery as a supplemental fuel;

3) An expanded container storage area;

4) An expanded lab pack storage, repack, and consolidation operation;

5) A new storage area for bulk storage of hazardous and non-hazardous wastes in roll-off containers;

6) A new storage area for temporary storage of medical waste;

7) A new drum crushing and compacting system; and

8) A new rail car transfer operation.

In early 1983, Chem Clear, Inc., Clean Harbors' predecessor at this site, submitted an application for this RCRA/HSWA permit. Clean Harbors submitted a completely new application in September of 1990. The application and permit address the facility's hazardous waste storage and treatment activities only; the non-hazardous waste management processes are exempt from RCRA permitting requirements. This permit allows the facility to continue and expand its waste management operations but under more stringent conditions.

Public Involvement Activities

Public notice of the public hearing was published in a local community newspaper, the Southtown Economist (5/19, 5/27, and 6/3/93) and mailed to those on the facility mailing list. Copies of the Clean Harbors' permit application, the draft or proposed RCRA/HSWA permit, and materials describing the RCRA program were placed at the Olive Harvey College Library for citizens to review.

On July 15, 1993, a public hearing was held at 7:00 p.m. in the Olive Harvey College Theater to provide the public with the opportunity to ask questions of the regulatory Agencies (IEPA and U.S.EPA) and make comments regarding the proposed permit. The public hearing in turn provided the Agencies with the opportunity to explain the draft permit, answer the community's questions and accept comments on the draft decision.

Public Concerns and Agency Responses

Numerous questions and issues were raised by concerned citizens during the public comment period and at the public hearing. All letters received during the public comment period became part of the IEPA/U.S.EPA Administrative Record for consideration in the final permit decision-making process.

The public comment period ended midnight August 13, 1993. A summary of questions and concerns raised by citizens are responded to in the following section.

Siting Questions/Comments

1. "Clean Harbors is located on the shores of Lake Calumet which drains directly into Lake Michigan. The Great Lakes represent the major reservoir of fresh water in the world. To recklessly subject this resource to possible contamination through accident or carelessness is a disservice to American citizens and creates an abrogation of Agency obligations to protect important resources."

   Response: The Agencies' (IEPA and U.S.EPA) reviews of hazardous waste management permit applications are thorough and deliberate. Both of the Agencies are required to make their permitting decisions based on the technical adequacy of the applications. The Clean Harbors application met the standards established in the regulations which in turn, are based on federal law, the Resource Conservation and Recovery Act. Section 39(a) of the Illinois Environmental Protection Act requires that the IEPA issue a permit if the applicant has shown that the facility as designed and operated will not cause a violation of the Act or of the regulations thereunder. The regulations require that facilities be designed adequately to prevent releases regardless of their proximity to important resources or members of the community. The only siting prohibition in RCRA is the building of facilities in active fault zones. Anyone who objects to the location standards or the lack thereof in RCRA should contact their Congressional representatives about changing the law.

2. "This project is not water related and need not be located on a navigable waterway. The Illinois International Port District demonstrates its contempt for all Illinois citizens by leasing port space for a non-port function. The port should be maintained for port purposes and non-port functions should be rejected."

   Response: Your comment has been forwarded to the Illinois International Port District for review.

3. Toxic waste disposal companies are only as safe as they are compelled to be and that is never safe enough to justify their location in an urban area. The facility should not be located in an urban area.

   Response: The Agency is not involved in deciding where facilities are to be located. Siting decisions are often highly emotionally and politically charged and are left to local decision-makers rather than state agencies. In Cook County, siting decisions for <u>new</u> facilities are made by the local zoning authority. This particular treatment facility has been a Clean Harbors facility since 1989; before that it had been operated since 1980 by Chem Clear, Inc.

4. I do appreciate that Clean Harbors seems to be a conscientious company. I just think that this is the wrong place to have the facility.

   Response: The Agency understands that there is opposition to the permit for Clean Harbors based on the facility's location. However, the IEPA must base its decision on the technical merits of the application, <u>not</u> on the popularity of the project.

5. What was the previous facility at this site?

   Response: The facility was built in 1980 by Chem Clear, Inc. Chem Clear owned and operated the facility treating the same types of waste which are treated today by Clean Harbors. In 1989, Clean Harbors bought the treatment facility from Chem Clear.

6. I believe that IEPA and U.S.EPA are perpetrating "environmental racism" and "class racism" by granting waste management permits in this community of black, Hispanic, and poor neighborhoods.

   Response: The Agencies are required to issue permits to those who demonstrate the ability to manage wastes properly. The Agencies do not choose locations for waste management facilities; private industries choose sites based on a number of reasons including availability of industrial property, ease of access to transportation routes, proximity to their customers and suppliers, and availability of existing facilities (infrastructure). The Agencies' responsibility is to require facilities, regardless of their location, to be operated safely and in an environmentally sound manner.

<u>Permit Process Questions/Comments</u>

7. Since Clean Harbors of Chicago, Inc. has been found in violation of the sanitary sewer discharge standards for copper, lead, nickel, and zinc, it would be imprudent to allow Clean Harbors of Chicago, Inc. to increase its hazardous waste capacity and to accept additional hazardous waste streams until such time as the company demonstrates that it can achieve and maintain compliance.

   Response: Sanitary sewer discharge standards are established through the authority of the Clean Water Act. Permits are issued and enforced by the Metropolitan Water Reclamation District of Greater Chicago. It is outside the scope of the RCRA permit review and the Agencies' authority under RCRA to enforce any other federal, state or local law or ordinance. However, the RCRA permit is not a defense against compliance with these other requirements.

8. The closed facilities of the Alburn and Chemical Waste Management incinerators and the Paxton and Land and Lakes Landfills have all been operated recklessly yet all had been permitted by your agencies. "The continued tendency of the IEPA and USEPA to grant permits to sleazy operators, law breakers, and polluters, certainly provides no security to people in Illinois that you will meet your responsibilities to protect health and important resources in any meaningful manner."

Response: Land and Lakes Landfills #1 and #2 are closing voluntarily due to changes in the regulations, not permit compliance problems. CWM's incinerator has not yet received a RCRA permit from IEPA to manage hazardous wastes because it has not yet demonstrated its ability to manage wastes safely. Alburn incinerator had been cited by IEPA and U.S.EPA precisely because it was violating its permits but closed before enforcement action by the Attorney General on behalf of the IEPA could proceed. Paxton landfill was violating its permitted height limitations and was closed by action of the City of Chicago.

Permits must be granted to those facilities which through their applications, demonstrate the ability to manage wastes according to the regulations (see response to Question #1). Permits are designed to communicate to the permittee and the public the requirements and conditions applicable to the permittee's operations. Every effort is made by permitting agencies to bring violators into compliance. However, if a facility is unable or unwilling to achieve compliance, enforcement is the next step in the Agencies' efforts to protect human health and the environment.

9. Why don't the Agencies consider permit applications in the greater context of the other pollution sources that it would add to, rather than in isolation? The cumulative effect of toxics is a critical consideration in an area such as this.

   Response: By law, permit applications must be reviewed on their own merits and against standards applicable to everyone. Air emissions control permitting most closely approaches this commentor's suggestion for a more holistic approach to permitting. Emissions limits for various air pollutants are based not only on best available control technologies (BACT) but also on the existing air quality of the area. In areas which do not achieve federal clean air standards, facilities are held to more stringent performance standards in order to prevent continued deterioration of air quality.

10. Do the U.S.EPA and/or Illinois EPA hire more people when they permit more sites?

    Response: The Agencies do not hire additional staff, however the IEPA's field staff in the Chicago area (located in Maywood) has been inspecting this site regularly and will continue to do so. Many facilities regulated by RCRA have chosen to stop their hazardous waste management activities in the past decade. This has reduced the number of facilities which must be inspected by IEPA staff. U.S. EPA may also inspect these facilities however IEPA has the primary responsibility.

11. Since 1980 many facilities in the U.S. have decided to "close" (or decomission) their hazardous waste management operations rather than apply for a RCRA permit. Are the facilities within Illinois that have been closing these waste management units, commercial hazardous waste management facilities? Have the remaining facilities expanded to meet the demand for hazardous waste management capacity?

Response: Many of the facilities that have closed were treating or storing their own hazardous wastes on-site. Only 4 commercial hazardous waste management facilities in Illinois have closed. Six others were denied RCRA permits; several of those which were denied have appealed their denials and remain operating under interim status authority until the Pollution Control Board hears their appeals and makes decisions.

The waste management capacity of Illinois kept pace with the volume of hazardous waste generated in Illinois.

12. Has there been a reduction or an increase in the amount of hazardous waste produced in Illinois from 1980 to 1993?

Response: The IEPA has collected and analyzed data for hazardous waste generated in Illinois for the time period 1982 through 1991. In 1992, the Agency published a Summary of 1988-1990 Annual Reports on Hazardous Waste: Generation, Treatment, Storage, Disposal and Recovery (available from the Agency's Planning and Reporting Section, Bureau of Land). The graph below is from this document. (The huge increase in waste generation from 1989 to 1990 is the result of the addition of a type of oil refinery waste which had been generated for years but had not previously been considered hazardous).

Hazardous Waste Generated
Illinois, 1982-1990

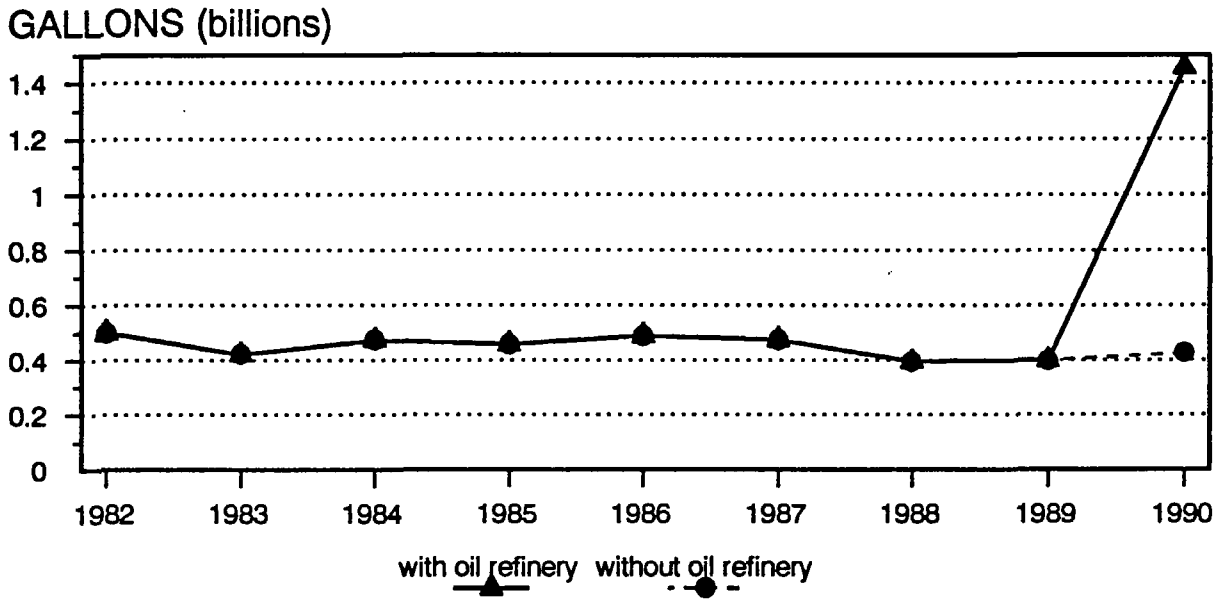

Hazardous waste generation amounts fluctuate yearly, and identification of trends and/or causes of these fluctuations is complicated. Wastes newly considered hazardous due to changes in testing procedures or regulations and the implementation of regulations requiring certain treatment prior to land disposal have each increased the amount of waste. Some factors which may tend to reduce waste generation include successful waste minimization projects, the closure or relocation of previously large generators and declining economic conditions.

13. If you increase the number of facilities which are able to treat these wastes by permitting them, you will help drive down the price of waste disposal by increasing competition. More waste will be the result because there will be no incentive to reduce waste.

    Response: The goal of the permitting process is the control of how waste is managed; not encouragement or discouragement of competition among businesses which manage wastes. Regardless of business competition, there will always be other economic incentives to reduce waste generation. The company or whole industry which can, through waste minimization efforts, reduce the volume of waste generated has a substantial competitive edge over others still generating large volumes of wastes since those waste management costs must be passed onto the consumer. Treatment and disposal costs will be dependent less upon competition between waste management companies than the treatment, disposal and regulatory compliance costs to which every company is subject.

14. What is the existing facility, and how does this permitting action expand its operations?

    Response: The facility currently treats only inorganic wastewaters (wastes hazardous due to high concentrations of metals) and operates a storage and transfer operation for virtually all types of hazardous and special waste. The permit allows the facility to construct and operate a treatment facility for listed wastes, expand the storage facility, and conduct fuel blending operations. For more information please refer to the section of this document entitled <u>The Clean Harbors of Chicago Facility</u>.

15. Does IEPA have any agreement or contract with Clean Harbors regarding household hazardous waste collection? Isn't it a conflict of interest for the IEPA to be both their employer and judge of their performance for permitting purposes?

    Response: Clean Harbors has participated in some of the household hazardous waste programs run throughout the state. They do not currently have a contract with the IEPA for that program. The Agency is in a unique position as a customer of any waste management company. Other customers perform facility audits to determine whether they want to do business with the prospective waste company. The Agency has access to inspection reports, the operations record, and enforcement and compliance histories to assist in choosing a waste treatment or disposal facility. Also, the choice of contractor is completely separate from the permitting program. Permits are granted only if a facility is found to be capable of managing wastes safely.

<u>Transportation Questions/Comments</u>

16. How will the hazardous waste be transported to the site? Are there provisions in the emergency (or contingency) plan for responding to accidents during transportation near the facility yet off-site? For accidents on-site but prior to unloading?

Response: Waste is currently transported by truck and will be in future by rail also. Any accident which occurs on-site would be addressed through the responses required by the contingency plan. The contingency plan does not address releases which may occur off-site. Local emergency response agencies are the primary responders to off-site releases, however since the Clean Harbors facility in Matteson is an emergency response facility, additional equipment, responders and expertise may be available to assist the local agencies. Once waste is on-site but prior to unloading, it is held in a waiting area which has secondary containment prior to unloading.

17. We are concerned about waste transportation by rail. There is a great deal of hunting in the area. The railcars that Clean Harbors are proposing to bring waste in on could easily be pierced by a bullet and cause a spill.

    Response: The Department of Transportation and the Illinois Commerce Commission (ICC) regulations require specific procedures be followed in the packaging, marking and transporting of hazardous materials, including hazardous wastes. IEPA does not regulate the transportation of hazardous wastes beyond the requirements that the wastes be manifested and transported to a permitted facility by a licensed special waste hauler in accordance with DOT requirements. In the event that a spill or accident involving a hazardous waste would occur off of the facility property, the community or county emergency coordinator and the Illinois Emergency Materials Agency (formerly ESDA), along with local police and HazMat unit of the Chicago Fire Department will respond as required by the local emergency services and disaster plan. IEMA has an emergency telephone number for the state's coordinated response program. The hazardous waste transporter is responsible by law for notification to the proper authorities and cleanup of any spills or releases.

18. Why is this facility located on the shore of Lake Calumet? Is the facility planning to barge in waste? If not, why is the facility sited in this area? Could the Agency write a condition in the permit which would prohibit barge transportation of hazardous wastes to the facility?

    Response: Clean Harbors did not site the facility on the Lakeshore. The facility was bought by Clean Harbors from a company which already operated a facility at the site. No condition in the permit is necessary to specifically prohibit barge transportation since it was not requested by the facility's application. The facility would need to modify the permit to bring waste in by barge. This modification to the permit would require both facility notification of the community when it made the modification request and IEPA notification of the community when IEPA's tentative decision was made so that the community could comment on the proposed modification.

Risk Assessment Questions/Comments

19. The air emission study, "An Evaluation of Potential Hazardous Material Emergencies through Atmospheric Transport from the Current and Proposed Clean Harbors Facility, Chicago, Illinois" prepared by Frank W. Sherman, P.E., Carlson Environmental Company, explicitly calls for further analysis of accidental chemical releases from the facility, and strongly recommends that the risk be minimized by limiting the permissible amount of potentially harmful chemicals at the site.

    Response: The study referred to in this comment was intended to assist the Agency with review of the Clean Harbors' contingency plan. The study instead was an attempt at risk assessment. Risk assessment is outside the scope of the RCRA permit. The requirements for review of the contingency plan were met by the later study "Application of a Screening Technique to Determine Recommended Amounts of Hazardous Wastes Which May Trigger Notification of Local Emergency Response Officials." This later study establishes spill amounts of specific wastes which under certain conditions, have the potential to impact areas outside the property boundaries. These spill volumes have been incorporated into the contingency plan as "trigger values" requiring notification of off-site emergency responders. All values are extremely conservative in order to be protective of human health and the environment. Modeling was based on releases of pure compounds, assumed a health risk at one-tenth of the level which is immediately dangerous to life and health (IDLH), assumed someone at the facility fenceline was exposed, assumed the worst meteorological conditions (a very slow breeze of 5 mi./hr.) and that the entire volume of spilled waste would evaporate and/or leave the site.

20. The IEPA should not issue a final RCRA/HSWA permit until it has fully assessed the potential risks to human health from accidental chemical releases from Clean Harbors and taken steps to minimize them.

    Response: Although risk assessment is not part of the RCRA/HSWA permitting process, steps have been taken to minimize risks to human health and the environment. The air emission study cited in the previous question should not have been a risk assessment but rather an emergency management tool. The subsequent study, discussed in the previous question's response, provides identification of the smallest volume of the most volatile and most toxic compounds which could cause an off-site impact. This information allows the Agency (IEPA) to establish spill volume limits in the permit which trigger implementation of the contingency plan and provide air release information to emergency responders. Exceedences of these trigger values would require notification of the local emergency responders for their assessment of the threat to the surrounding areas.

21. The air emission study inadequately assessed the proximity of residences to the site and failed to assess risks to workers in nearby facilities, to fishermen in the Lake and in Big Marsh, and to the surrounding environment including impacts to bird and animal life. It also failed to assess the separate risks raised by Clean Harbors' proposed addition of a rail spur to allow transportation of hazardous chemicals to the site by rail car.

    Response: This comment refers to the original study cited in comment #19. The original study was not what had been requested by the Agency. Instead it focused on risk assessment and, as a risk assessment is not adequate. The Agency requested a subsequent air emission study, the results of which are not dependant upon the proximity of residences, industrial workers, fishermen or bird and animal life. The purpose of the second air emission study (cited in the response to comment #19) is identification of the volume of a release which could impact the environment off-site. This data was then incorporated into the permit by establishing spill volumes which trigger implementation of the contingency plan for emergency response. These trigger values identify spill or release levels which when exceeded, require notification of the local emergency responders so that they can assess the threat to the surrounding area and take the necessary action to protect nearby residents, workers or fishermen.

22. The air emission study should be performed by the Agency (IEPA) rather than by the permit applicant. This would prevent the applicant from minimizing risks to the public and the environment.

    Response: The air emission study is performed by the applicant as part of the permit application. The entire permit application, including the air emission study is reviewed by the IEPA's permit review staff. The reviewer for the Clean Harbors permit application is a chemical engineer familiar with the air modeling program used by the applicant. Part of the reviewer's job is to verify the data submitted by the applicant. Risk minimization is not an issue since risk assessment is not the goal of the air emission study.

<u>Contingency (Emergency) Planning Questions/Comments</u>

23. What are the secondary containment cells, what are they made of and how large are they?

    Response: Secondary containment refers to the systems of concrete basins and sumps that are located below areas which are used for hazardous waste management. These basins are coated with materials which are impervious to the types of waste stored in each particular area and are designed to catch any spills or releases from the containers. The basins are sloped to drain to a sump area where any spill can be pumped back into containers or tanks. Rain water is also collected in this manner and is managed as though it were hazardous waste. Secondary containment must be able to contain 10% of the volume of containerized waste in an area or, if for a set of tanks (tank farm), the volume of the largest tank. Additionally, outdoor secondary containment systems must be able to hold the volume resulting from precipitation or runon into the containment system from a 24 hour, 25 year storm event (approximately 6 inches of rainfall).

24. What are some of the emergencies for which the facility's emergency (contingency) plan prepares? What does the contingency plan require the facility to do in case of fire or explosion? How does the facility respond to other emergencies?

Response: The contingency plan addresses responses to fires, spills or explosions. The focus of any response is to prevent or control releases of the hazardous constituents to the environment. This is accomplished by stopping material transfer operations, containing and collecting released wastes and removing or isolating damaged containers. Since all hazardous waste management operation areas have secondary containment systems, confinement and collection of releases is usually a simple procedure. Large quantity spills can be collected using portable pumps or vacuum trucks. Absorbant materials (including absorbant booms for placement on land or water to block spreading contaminants) are available throughout the facility for use in containing and cleaning up spills. Fires are fought by facility personnel if they are small and can be controlled with the equipment on-site. Otherwise professional firefighters and other emergency responders trained to respond to these types of emergencies would be needed. Regardless of which responses are needed, the facility is required to notify the police department, fire department, and other emergency response agencies whenever the contingency plan is implemented in response to a fire or explosion or when the trigger value for a spill is exceeded.

25. Does the contingency plan mention that any emergency vehicle can only reach Clean Harbors by crossing railroad tracks which may be blocked?

Response: No, the contingency plan describes the facility's response preparedness, it does not describe these access problems. The facility is accessible from both north (103rd to Stony Island) and east (from Torrence along 122nd). The railroad tracks along Stony Island to 103rd are reportedly infrequently used. Clean Harbors is required to submit its contingency plan to local emergency responders and already works with the HazMat unit of the Chicago Fire Department (training drills and facility tours) in order to acquaint them with the facility and area.

26. Are there provisions in the contingency plan in case there is a spill into Lake Calumet which makes its way into Lake Michigan?

Response: There are several facility design features which prevent wastes from escaping into the environment. The primary structural feature is the secondary containment system required in all waste management areas (please see response to Question #23 for further discussion of secondary containment systems). If a release does occur which is not contained by the secondary containment system, other emergency measures described in the facility's contingency plan are designed to control the release and prevent the spread of any hazardous constituents. Releases which may occur off-site will be responded to by local emergency response agencies (HazMat unit of the Chicago Fire Department, etc. - see response to question #17). The U.S. Coast Guard is also concerned about the contamination of Lake Michigan by releases of chemicals managed in the Lake Michigan watershed and has a contract with Clean Harbors which

requires the facility to keep on-site, 36-inch diameter Ocean booms to contain spills which may occur on or along local waterways. This contract is separate from but complements the contingency plan because it ensures that equipment for responding to a spill which either leaves the site, or which occurs off-site, could be addressed by equipment on-site. These absorbant booms are to be available to the Coast Guard in the event any emergency release occurs from any industrial, waste management or transportation accident in the area.

27. What is the distance of the Clean Harbor's buildings from the shore of Lake Calumet? If some emergency were to take place, and contaminants were to reach the shore of Lake Calumet, what facilities, equipment, and personnel does the company have that could assure us that the contamination would not spread? Is emergency response equipment (such as absorbant booms) on-site at the Chicago facility?

    Response: The closest building to Lake Calumet is the existing tank farm which is 40 feet from shore. The proposed hazardous waste management building No. 3 is also 40 feet from Lake Calumet. Clean Harbors was founded as an emergency response company and in that original capacity, is under contract with the Coast Guard to provide on-site, 36-inch diameter Ocean booms to protect waterways from chemical spills in the area. These booms would be available for use on-site if they are not in use at another spill. The company also has response equipment, facilities, and personnel both on-site and at its emergency response facility in Matteson approximately 20 miles from the Lake Calumet facility. On-site employees have 40-hour OSHA training in Safety and Emergency Response. As stated earlier, the purpose of the contingency plan, and the containment system are to prevent releases to the environment and to provide immediate responses on site for containing and cleaning up releases before they spread to areas like Lake Calumet.

28. Does the application have any wording regarding community evacuation should an accident occur? Is there specific language in the permit regarding evacuation routes to take or places to go?

    Clean Harbors is required to notify the police and fire departments in case of fire or explosion or if any release exceeds the amounts established by the permit based on the air emissions study. The permit does not describe appropriate evacuation routes and procedures for the community. Evacuation decisions must be made on a case-by-case basis, at the scene of an emergency and by trained response personnel. The fire department (specifically the HazMat unit) must make the decision whether or not to evacuate people and how the evacuation should proceed (including evacuation routes).

29. What assurance do we have that the fish in Lake Calumet will not be contaminated by the chemicals at this plant and thus the people who eat the fish indirectly affected by the chemicals?

    Response: The facility is designed to prevent any of the hazardous wastes from being released into the waters of Lake Calumet. Secondary containment is provided in all waste management areas, the employees are trained in emergency response and operational safety, contingency planning is made for emergencies, and response equipment is maintained on-site to prevent contaminating the environment.

Air Emission Questions/Comments

30. The Chicago area is a non-attainment area for certain air pollutants. How can the Agency keep allowing new industry which causes more air pollution to come into the area?

    Response: The Southeast side is a non-attainment area for ozone and small particulate matter. This means that the area's air quality is lower than the federal standards for healthy air because of these two pollutants. To prevent further deterioration and improve the quality of air in these non-attainment areas, major new sources of these air pollutants must clean up the air more than they will pollute it. They also must use control technologies to reduce their emissions of these pollutants and others considered to be Air Toxics.

31. Are there any criteria for consideration of truck traffic and air pollution from trucks when siting facilities in non-attainment areas? Does the Agency regulate truck traffic and truck air pollution?

    Response: Although the Agencies are not involved in siting decisions (see response to Question #3), air pollution from truck traffic and other mobile sources (automobiles, etc.) in both attainment and non-attainment areas is a great concern of both the IEPA and U.S.EPA. The Clean Air Act Amendments of 1990 give the U.S.EPA greater powers to regulate emissions from all mobile sources including trucks. New standards which go into effect on October 1, 1993, require truckers to use specially formulated fuel which contains much less sulfur than the fuels being used previously. This new requirement will help reduce emissions of sulfur compounds and particulates from these diesel engines. Other new requirements include tailpipe emission reductions beginning in model year 1994 and reformulated gasoline for 1995.

    Truck traffic regulation is the responsibility of the Department of Transportation.

Questions/Comments for the Facility

32. Is Clean Harbors in any way a part of a holding company? Is it a subsidiary of a larger company? Is it associated with any other waste treatment or disposal company, such as Browning Ferris, or Waste Management?

    Response: Clean Harbors, Inc. is a holding company for its various operating divisions. It is a publicly traded company headquartered in Quincy, Massachusetts, and is wholly owned by shareholders and senior management. Clean Harbors is not affiliated with any other waste treatment or disposal company.

33. How much liability insurance does the facility carry? Who would be responsible for health problems if windborne contaminants made people sick?

Response: RCRA requires facilities to carry liability insurance of $1 million per occurrence and $2 million total per year for corrective action. Clean Harbors has coverage three times that required by law: $3 million liability insurance per occurrence and $6 million aggregate for corrective action per year. The facility is also subject to civil suits filed by private citizens for damages caused by the facility.

34. Is Clean Harbors going to ship any waste to a Chemical Waste Management incinerator? If the incinerator located next to Clean Harbors were to re-open would they send waste to it?

    Response: The RCRA permit does not prohibit nor require the use of specific facilities for further hazardous waste management except to require the use of RCRA authorized facilities (permitted or interim status facilities).

35. Did Clean Harbors have an employee die this year?

    Response: Clean Harbors reports that one of its employees was killed in a clean-up operation this year. The accident was not at one of their waste management facilities; it occurred during a response action taken by the company's Field Services division.

36. Have any firefighters or police been exposed to hazardous wastes at their facilities in any kind of emergency response?

    Response: Clean Harbors has responded that there have been no injuries to local emergency responders (firefighters and police) who have responded to releases at their facilities.

37. Has Clean Harbors ever had any problems with regard to spills on public streets?

    Response: Clean Harbors responds that they have experienced releases during the transportation of containerized hazardous wastes. Their emergency response group has also provided response and clean up services at those spills.

38. Has Clean Harbors had any accidents at its Braintree, Mass. incinerator?

    Response: Clean Harbors has responded that their Braintree, Massachusetts facility is a non-hazardous waste incinerator. Although Clean Harbors had in 1987, applied for a permit to incinerate hazardous wastes, the application was withdrawn in 1990. Clean Harbors reports that there have not been any injuries associated with the incinerator operations.

39. What percentage of Clean Harbors' business is treatment of hazardous waste?

Response: Approximately 95% of Clean Harbors' present business at the Stony Island facility is inorganic wastewater treatment. The remaining approximately 5% is the storage and transfer of containerized waste for off-site disposal. In Illinois, 75-80% of the company's business is treatment, storage or transfer of hazardous wastes. The balance of their business in Illinois is their emergency response business. Company-wide, hazardous waste management and the emergency response business each account for approximately 50% of the company's business.

40. How many people does Clean Harbors employ from this community?

Response: Approximately 50% of the Stony Island facility's emloyees live between the boundaries of 87th Street to the north, State Street to the west, Sibley Avenue to the south and the Indiana border to the east.

41. How much real estate tax does the facility pay?

Response: Real estate taxes this year were approximately $40,000 paid to the County. Additionally $200,000 was paid to the State of Illinois and $400,000 to the City of Chicago in waste fees and license fees.

42. If the Port Authority owns the property, why does Clean Harbors pay real estate taxes?

Response: The facility's lease agreement requires the facility to pay the real estate taxes.

43. How much money does Clean Harbors pay to the Port Authority as a leasing fee? When does the lease expire on the facility?

Response: This year's lease fee paid to the Port Authority is $169,000. The lease from the Port Authority on the Clean Harbors site expires in the year 2000 with an option for renewal of the lease twice for 10 additional years each renewal period (until 2020). At renewal, the fees are reassessed to reflect any major change in the value of the facilities.

44. I would like to see some kind of community committee formed in conjunction with the IEPA to keep in touch with what is going on at the facility. This committee should meet regularly and have some input into the running of the facility, from the community standpoint.

Response: The Agency applauds this type of community/industry effort to establish cooperative relationships. Clean Harbors has expressed interest in participating in this type of committee. Community members interested in participating in a group of this type should contact Mara McGinnis at the IEPA, 217/524-3288.

Other Comments:

Clean Harbors does not create hazardous or toxic waste, it treats wastes, renders the waste inert and removes the waste from the area. There will be wastes created as the result of industrial processes. As waste is continued to be created it is our hope that there will be an organization like Clean Harbors available in this area to meet industry's needs for the removal of waste from the environment.

Clean Harbors is a recycler; that puts them at the top of the waste management hierarchy. "I see no reason why we shouldn't let them continue to do what they're doing, as long as they continue to do it safely ..."

Clean Harbors' Comments

The comments made by the Clean Harbors of Chicago, Inc. facility were very extensive and specific to the technical details of the facility's operation and the language of the permit. Anyone interested in reviewing the facility's comments and the Agencies' responses can find them in the copy of this Response Summary available at the information repository located at the Olive Harvey College Library. A copy may also be obtained by requesting one from Ms. Mara McGinnis who can be contacted at the address listed below.

FOR FURTHER INFORMATION

Questions about the public hearing process and the RCRA/HSWA permit should be directed as follows:

(Public Hearing Procedures & Exhibits)

John Williams, Agency Hearing Officer
Illinois EPA
2200 Churchill Road
Post Office Box 19276
Springfield, Illinois 62794-9276

217/782-5544

(Permits & Appeal Process)

Mara McGinnis
Government and Community Affairs
Illinois EPA
2200 Churchill Road
Post Office Box 19276
Springfield, Illinois 62794-9276

217/782-5562

SIGNED: John Williams/Det

DATED: September 30, 1993

MM:sf/sp/780Y,1-18

Clean Harbors' Comments

The following section consists of the Clean Harbors of Chicago, Inc.'s comments on the draft permit, the Agencies responses, and corrections or clarifications made to the permit by the Agencies.

Comment #1

Page 1 of the Fact Sheet and the Permit, Condition II.A

Please correct all references to the Permittee's legal name by adding the term ", Inc." after "Clean Harbors of Chicago".

Response:

The Fact Sheet portion of the Draft RCRA Part B Permit is included in an effort to inform and familiarize readers of current operations conducted at this facility. Since the Fact Sheet is not included in the final RCRA Part B Permit, these corrections are hereby noted for further references. Accordingly, page 1 of the permit will be corrected.

Comment #2:

Section II.A of the Fact Sheet

Please correct an editorial error by adding the word "and" at the end of line item vii and deleting the word "and" from the end of line item viii.

Response:

Since the Fact Sheet is not included in the final RCRA Part B Permit, these corrections are hereby noted for further references.

Comment #3:

Section III.A of the Fact Sheet, Section A on page 4 of the Permit , Section I.B of the Permit

The capacity for each container storage bay is described in terms of the maximum number of 55-gallon drums. Since containers other than 55-gallon drums are allowed in the storage bays, please express the capacity of each unit in terms of overall waste gallonage. For example, please change the phrase "552 55-gallon drums" to "30,360 gallons (552 55 gallon drum equivalents)".

Response:

Since the Fact Sheet is not included in the final RCRA Part B Permit, these corrections are hereby noted for

further references. The Agency agrees that the proposed change is reasonable and has modified the permit accordingly. Section I.B of the permit already states "or equilvalent"; therefore, no modification will be made to this condition.

Comment #4:

Section III.A and C of the Fact Sheet

The draft Permit notes that "a total of 8 55 gallon drums" may be stored on the mezzanine level of Chamber 3 of the reactor for lab pack treatment. Additionally, the Agency has removed from RCRA hazardous waste permitting requirements the tanks and ancillary equipment that make up the existing wastewater treatment system. Therefore, the closure costs will be modified to reflect these changes.

Response:

The Agency has reviewed your comment and finds that it is acceptable.

Comment #5:

Section III.B of the Fact Sheet and of the Facility Description in the Permit

There are, in fact, five (5) proposed areas for nonhazardous container storage. Please delete the word "and" at the end of line item iii), change the "iv)" to "v)", and add a new line item which reads:

iv) One (1) 30-cubic yard rolloff container in the proposed fuel blending area for empty and crushed drums: and

Response:

Since the Fact Sheet is not included in the final RCRA Part B Permit, these corrections are hereby noted for further references. The Agency agrees that the proposed change is reasonable and has modified the permit accordingly.

Comment #6:

Section III.C of the Fact Sheet and Facility Description in the Permit and Section II.B.1 of the Permit

The capacity of each tank should reflect the design capacity, not the operating capacity. Please change the following:

Tank Storage - Hazardous

i) change "6,000" to "7,000"
vi) change "effluent collection tank" to "secondary clarifier"

vii) change "180,000" to "188,500"

xi) change the phrase "(3) reactor vessels" to "one 3-compartment reactor vessel"

xiv) change "10,000" to "10,400"

Proposed RCRA Tanks - Listed Waste Treatment and Storage

vi) change "3,770" to "1,270"

Response:

Since the Fact Sheet is not included in the final RCRA Part B Permit, these corrections are hereby noted for further references. The Agency agrees that the proposed change is reasonable and has modified the permit accordingly.

Comment #7:

Description of the Facility

Neither CHCI nor its predecessor company (Chem Clear, Inc.) were involved in onsite land disposal activities. Please change the phrase "Pre-RCRA" to "Pre-1980". Also, the referenced land disposal activities occurred on other parts of the property and were not connected in any way with the current activities conducted by CHCI. Please insert the clause "conducted on other portions of the property prior to the Permittee's construction and operation of the current facility" between the words "activities" and "included".

Response:

The Agency agrees that the first proposed change is reasonable and has modified the permit accordingly. The Agency feels that the second proposed change is inaccurate because current structures are located over former land disposal sites. The tank farm is located over the former temporary pickle liquor basins and the office trailer is located over the former permanent pickle liquor basins. Therefore, the Agency has not revised the permit to incorporate this comment.

Comment #8

Condition I.B.1.a

Please insert the phrase "The Inside Storage Area" prior to "(Within Processing Building No. 2)".

Response:

The Agency agrees that the proposed change is reasonable and has modified the permit accordingly.

Comment #9

Condition I.C.2

Please delete. Unless the container is leaking or has leaked, no record is required by the regulations.

Response:

Pursuant to 35 Ill. Adm. Code 703.241, "each RCRA permit issued under Section 39(d) of the Act shall contain terms and conditions which the Agency determines are necessary to protect human health and the environment." Transference of a drum contents due to poor drum condition should not be a routine occurrence. If a generator uses drums which are not in good condition routinely, the Agency needs to be aware of this fact. Therefore, the condition will remain as worded in the draft permit.

Comment #10:

Condition I.C.3

Change the word "placarded" to "labeled", and insert the phrase "prior to shipment" at the end of the sentence. Per 49 CFR 172 and 35 Ill. Adm. Code 722 Subpart C, DOT markings and labels are pre-transport requirements, not RCRA storage requirements.

Response:

The Agency agrees that the proposed change is reasonable and has modified the permit accordingly.

Comment #11:

Condition I.C.4

As noted in the above comment, the DOT marking and labeling requirements of 49 CFR 172 and 35 Ill. Adm. Code Subpart C are pre transport requirements, not RCRA storage requirements.

Response:

As stated in 35 Ill. Adm. Code 724.156(b), the emergency coordinator must be able to identify the released material. This may be done by visual observation. Pursuant to 35 Ill. Adm. Code 703.241, "each RCRA permit issued under Section 39(d) of the Act shall contain terms and conditions which the Agency determines are necessary to protect human health and the environment." To ensure that responding emergency personnel are aware of the contents of the spill and the surrounding drums, the Agency requires that the contents of the drums be clearly identified on the drums.

Comment #12:

Condition I.E.3

CHCI wishes to confirm that the railings between bays do not count as walls for the two foot aisle space requirement.

Response:

The Agency agrees that the railings do not constitute walls for this requirements. As long as there is adequate spacing (12 inches) between the drums and railings for a visual inspection, this would be adequate.

Comment #13:

Condition I.E.4.b

Please change the term "containers" to "55-gallon containers" to clarify that pallets are required between each layer of 55-gallon drums, but that for smaller size containers such as a 5-gallon pail, pallets will only be used when necessary to provide stability to the stacked containers.

Response:

The Agency agrees that the proposed change is reasonable with the following addition:

A pallet for stability for smaller size containers shall be used when the height of the stack exceeds 42 inches unless the containers are shrink wrapped.

Comment #14:

Condition I.E.4.c

Please change to "55-gallon drums may be stacked 2-high

with a pallet under each drum. Smaller containers may be stacked so long as the height of the stack does not exceed the height of two 55 gallon drums, each on pallets (i.e., 84 inches)."

Response:

The Agency agrees that the proposed change is reasonable and has modified the permit accordingly.

Comment #15:

Condition I.E.4.d

Please change to "55-gallon drums may not be stacked in the flammable storage areas. Smaller containers may be stacked so long as the height of the stack does not exceed the height of one 55-gallon drum on a pallet. (i.e., 42 inches).

Response:

The Agency agrees that the proposed change is reasonable and has modified the permit accordingly.

Comment #16:

Condition I.E.6.a

Per NFPA 30, Section 4-5.7.12, the minimum aisle space between piles of flammable liquids is four (4) feet. Please change "five foot aisle" to "four foot aisle".

Response:

Section 4-5.7.12 deals with storage of liquids in a liquid warehouse. The storage conducted at your facility falls under Section 4-8, "Outdoor Storage". In accordance with Table 4-8, the distance between piles or racks shall be 5 feet. Therefore, the condition as worded in the permit will remain.

Comment #17:

Condition I.E.6.a.v

For consistency, please change "do not contain D001 wastes." to "one or more containers of waste having a flash point above 140 F."

Response:

The Agency agrees that the proposed change is reasonable if the word "above" is changed to "below" and the

statement reads as a negative statement.

Comment #18:

Condition I.F.

In sentence 1, omit the word "weekly".

Response:

The Agency agrees that the proposed change is reasonable and has modified the permit accordingly.

Comment #19:

Condition I.F.3

In sentence 2, please change the word "Ill." to "all".

Response:

The Agency agrees that the proposed change is reasonable and has modified the permit accordingly.

Comment #20:

Condition I.F.4

In sentence 1, omit the word "weekly".

Response:

The Agency agrees that the proposed change is reasonable and has modified the permit accordingly.

Comment #21:

Condition I.J.5

Please change the phrase "in authorization" to "an authorization".

Response:

The Agency agrees that the proposed change is reasonable and has modified the permit accordingly.

Comment #22:

Condition I.L.1, Condition II.L.1, Condition III.I.L(1), Condition III.II.L.(1), Condition III.V.50, Condition III.D.C(1), Condition V.50 (standard conditions) and Attachment D, Condition C.1

Per 35 Ill. Adm. Code 724.212(d), the period of time for prior notification of closure is 45 days for non-land disposal based facilities. Please change "180 days" to "45 days".

Response:

The agency agrees that the proposed change is reasonable and has modified the permit accordingly.

Comment #23:

Condition I.L.2

Please correct an editorial error by changing the phrase " underlying soil or sampling in" to "underlying soil. Sampling in".

Response:

The Agency agrees to clarify the sentence by creating two sentences as suggested above. However, the last sentence shall start as follows: "Otherwise, sampling in ..."

Comment #24:

Condition II.C.3

In sentence 1, for clarification purposes, please change the phrase "the surface coating" to "each secondary containment coating system"

Response:

The Agency agrees that the proposed change is reasonable and has modified the permit accordingly.

Comment #25:

Condition II.H.4

Please change the phrase "within the same operating shift" to "within 24 hours". CHCI notes that 35 Ill. Adm. Code 724.296(b)(2) provides up to 24 hours to remove any spills or leaks from a tank secondary containment unit.

Response:

The Agency agrees that the proposed change is reasonable and has modified the permit accordingly.

Comment #26:

Conditions II.H.6.c and II.H.6.d

CHCI notes that the tank inspection requirements of 35 Ill. Adm. Code 724 Subpart J do not require any annual tank inspections of any kind to be conducted for new hazardous storage tanks that are equipped with proper secondary containment features. Please delete these conditions in their entirety.

Response:

Operational variabilities mandates the individual inspection of each tank. Ultrasonic testing is an acceptable means to confirm rates of corrosion determined by an internal inspection but it is unlikely to determine localized areas of corrosion such as oxygen pitting, galvanic action, selective leaching and intergranular corrosion. FRP tanks cannot be tested using ultrasonics and are subject to attacks such as softening and checking. The Agency feels that internal inspections are mandated to ensure the integrity of the tanks. In accordance with 35 Ill. Adm. Code 724.115; the operator must conduct inspections often enough to identify problems before they harm human health and the environment.

Comment #27:

Condition II.I.1, Condition II.I.2

Please modify the phrase "in the tank system or secondary containment system" to "in an unenclosed tank system or unenclosed secondary containment system". This is consistent with USEPA's interpretation that the term "into the environment" does not include spills or releases that occur within a contained structure such as a process building (see 54 FR 22526).

Response:

The Agency disagrees with this logic. Since these process buildings are 1) usually vented to the atmosphere, 2) OSHA requirements generally require a minimum number of air changes per hour and 3) CHCI proposes to move rolloff boxes in and out of some the process buildings on a routine basis, the Agency would argue that these structures may allow the hazardous substance to escape into the air, water or soil. That is, they are an unenclosed containment structure. Furthermore, the RCRA program is separate from the CERCLA program and there is no indication that this definition has been applied to the RCRA program. The condition, as worded in the permit, is a paraphrase of the regulations contained in 35 Ill. Adm. Code 724.296(d) and will remain as it currently exists.

Comment #28:

Condition II.L

In sentence 1, CHCI is unsure of the meaning of the term "discharge confined structures". For clarification, please change to "containment structures".

Response:

The Agency agrees that the proposed change is reasonable and has modified the permit accordingly.

Comment #29:

Condition III.V.41

The due date for Condition 41, "Implementation of Contingency Plan" is missing. Please add the phrase "As needed".

Response:

The Agency agrees that the proposed change is reasonable and has modified the permit accordingly.

Comment #31:

Condition IV.A

Please correct an editorial error by changing "Ill. Adm. Code 724.201" to "35 Ill. Adm. Code 724.201".

Response:

The Agency agrees that the proposed change is reasonable and has modified the permit accordingly.

Comment #32:

Condition IV.A

The phrase "from any solid waste management unit (SWMU) at its Chicago facility" is very broad, does not precisely define the Permittee's obligations, and is inconsistent with the specific SWMUs identified and referenced further on in Section IV and Attachment F. Section IV and Attachment F only require investigation of the SWMUs listed in Condition IV.B.1 and any newly-identified SWMUs which require assessment pursuant to Condition IV.F.

Please reword the phrase to read "from any solid waste management unit (SWMU) at its Chicago facility listed in Condition IV.B.1 or newly-identified pursuant to Condition IV.F".

Response:

The wording revision proposed by the Permittee appears reasonable, and does not appear to limit the authority of the Agency. Therefore, the permit will be revised to include the proposed wording.

Comment #32:

Condition IV.B.2

The phrase "to the soil and/or air" is inconsistent with the requirements of Condition IV.B.1. Condition IV.B.1 only requires evaluation of releases to soil. Please delete the words "and/or air".

Response:

The Agency agrees that the proposed change is reasonable and has modified the permit accordingly.

Comment #33:

Condition IV.B.5.b

The use of the term "any environmental media of concern" in Item"(1)" is overly broad. The Phase I RFI report will only be addressing the specific media of concern directed in Condition IV.B.1. Please change the aforementioned phrase to "the media of concern".

Response:

The intent of the wording provided in the subject condition is to insure that former releases to any environmental media which are identified through the Phase I RFI investigations be identified. The wording proposed by the Permittee would require corrective actions if Phase I investigations indicate that the subject unit has released only to the listed environmental media of concern. While the investigations are anticipated to subjectively focus on the environmental media of concern listed in Section IV, Condition B.1 of the permit, the current wording requires the Permittee to report potential former releases to any environmental media. Since the proposed wording would severely limit the intent of corrective action investigations at this facility, the current wording will remain in the permit.

Comment #34:

Condition IV.B.5.b

Based upon its review of the Phase I RFI Report, with respect to further investigation, the Agency determination is whether a Phase II RFI is required. The determination whether a Phase III RFI is required will, in turn, be based upon the Phase II RFI Report and is addressed further on in Section IV (i.e., Condition IV.B.9). Please delete the phrase "and, if necessary, Phrase III of the RFA" at the end of Condition IV.B.5.b.

Response:

The current wording of the permit provides for the Permittee to conduct a Phase III investigation based on the results of a Phase I investigations. While it is unlikely that the Agency will require a Phase III investigation based only upon the results of a Phase I investigation, the Agency believes that the alternative should be available for those units which indicate a potential, eminent, or immediate threat to human health and the environment through the results of a Phase I investigation. Therefore, the Agency will modify the permit to clarify that a Phase III investigation may be required if the Phase I results indicate contamination extends to groundwater.

Comment #35:

Condition IV.B.5.c.4

According to this Condition, the Agency's final letter will "Indicate whether the facility must perform a Phase II and/or a Phase III RFI Investigation for those SWMUs requiring further investigation".

The word "facility" should be changed to "Permittee".

Response:

The proposed wording revision appears reasonable; therefore, the Agency will revise the permit to reflect this modification.

Comment #36:

Condition IV.B.5.c.4

It is questioned how, at this stage of the process in advance of a Phase II RFI Investigation, the Agency can determine whether a Phase III RFI investigation is

required. The determination of whether a Phase III RFI investigation is required will be based upon the Agency's review of the RFI Phase report and is addressed in Condition IV.B.9.

Please delete the words "and/or a Phase III" from condition IV.B.5.c.4

Response:

See the Agency response to Comment #34 above.

Comment #37:

Condition IV.B.6

Condition IV.B.1 only requires evaluation of releases to soil. Please delete the words "and/or air" from the second sentence of condition IV.B.6.

Response:
The Agency agrees that the proposed change is reasonable and has modified the permit accordingly.

Comment #38:

Condition IV.B.9.a

The reference to "Appendix D" in the last sentence should be changed to "Appendix F".

Response:

The Agency agrees that the citation is incorrect and has modified the permit accordingly.

Comment #39:

Condition IV.B.13.e

The Agency action should be subject to the appeal provisions of both Section 39(a) and 40(a) of the Act, as is provided in other appeal provisions of Permit Section IV. Please add "and Section 40(a)" after "Section 39(a)".

Response:

The appeal provisions of Section 40(a) of the Illinois Environmental Protection Act appear to be applicable to this condition of the permit. Therefore, the Agency will modify the permit to include this wording.

Comment #40:

Condition IV.D.1

There appears to be a typographical error under "Due Date" with respect to the first line. The words "RFI Phase I" should go with the word "Workplan" under "Facility Submission". Please reword this to read as follows:

Facility Submission	Date
Initial Cost Estimate (with RFI Phase I Workplan)	120 days after the effective date of this permit

Response:

The Agency agrees that this is a typographical error and has corrected the wording in the permit in accordance with the above suggestions.

Comment #41:

Condition IV.F.1

The phrase "newly-identified SWMU(s)" needs to be clarified. Is the Agency referring to:

i SWMUs not identified in the RCRA Facility Assessment; or

ii SWMUs not identified in the RCRA Facility Assessment and which need investigation; or

iii SWMUs not listed in Condition IV.B.1 which are discovered to need investigation?

Response:

Since corrective action for newly-identified SWMUs which have been previously identified at the facility through the Agency RFA and RCRA permit are addressed through Section IV, Condition E, for the purpose of this permit, the term "newly-identified SWMUs" shall mean all SWMUs not previously listed in the Agency's RFA or specifically addressed in Section IV of the subject permit.

Comment #42:

Condition V.2

Please correct the typographical error in the regulatory citation by adding the word "Code" after the "Adm".

Response:

The Agency agrees that the proposed change is reasonable

and has modified the permit accordingly.

Comment #43:

Condition V.3

Please correct the typographical error in the regulatory citation by adding the word "Code" after the word "Adm".

Response:

The Agency agree that the proposed change is reasonable and has modified the permit accordingly.

Comment #44:

Condition V.13.b

Please strike sentence 3 regarding the maintenance of groundwater monitoring well data. The facility is not a land disposal facility subject to groundwater monitoring requirements.

Response:

This is an informative condition and you are correct that your facility is not currently subject to groundwater monitoring requirements. However, your facility may become subject these requirements as a result of the RCRA Facility Investigation under corrective action or a result of the inability of the facility to obtain clean closure of a RCRA unit. For these reasons, this informative statement will remain in the permit.

Comment #45:

Condition V.60

In the case of waste storage and transfer activities, CHCI relies on the testing/knowledge supplied by the generator of the waste on the inbound Land Disposal Restriction (LDR) notification/certification documentation. In the case of treatment waste, actual analytical testing is only required if CHCI intends to "certify" that the treated waste meets the applicable LDR treatment standard(s). Please add the phrase "for which the Permittee is first to certify that the constituent concentration is below the treatment standard".

Response:

This condition applies only to wastes generated at your facility (including residues from treatment processes). It does not apply to wastes received at your facility for

storage, consolidation and transfer where the character of the waste is not changed. The Agency believes this addresses your concerns about this condition and the existing condition will not be changed.

Comment #46:

Condition V.61(1)

For hazardous waste storage tanks, 35 Ill. Adm. Code 728.150(a)(2)(b) provides a permittee with the option to maintain certain waste identification information as part of the operating record of the facility, in lieu of actually marking each tank. Please modify the storage tank requirement to read: "(2) each tank is clearly marked to identify its contents, the quantity of each hazardous waste received, and the date each period of accumulation begins. In lieu of marking each tank with the required information, the permittee may maintain such information as part of the operating record of the facility. (35 Ill. Adm. Code 728.150)".

Response:

The Agency agrees that the proposed change is reasonable and has modified the permit accordingly.

Comment #47:

Condition V.63

CHCI wishes to clarify the term "days", when used in the sense of "daily" inspections, means each day that the facility is conducting actual hazardous waste handling operations, not calendar days. In other words, no inspections are required to be conducted on weekends or holidays (or other scheduled shutdown periods) unless actual waste handling activities are being conducted.

Response:

If the facility is operational (i.e. personnel are present), inspections are to be conducted in accordance with the schedule. During shutdown periods, but personnel are present doing maintenance, inspections are to be conducted normally for all items except treatment units which are exempt. During non work days, inspections are not required.

Comment #48:

Attachment A,...For Stabilization/Fixation

For the sake of consistency with other lists of codes, please add the section title "A. Characteristically Hazardous wastes" prior to the list of authorized D-codes.

Response:

The Agency agrees that the proposed change is reasonable and has modified the permit accordingly.

Comment #49:

Attachment A,...For Stabilization/Fixation,

To date, CHCI has been unable to provide the Agency with analytical data to prove the feasibility of stabilization of certain waste codes proposed for stabilization/fixation and listed in Table C-8 of the Waste Analysis Plan. CHCI requests that, instead of excluding such codes from the Part B permit, the Agency conditionally approve the codes and include them in the permit with a provision that treatment cannot commence until such time that CHCI has submitted and the Agency has approved in writing the treatment of the code(s). This approach would provide CHCI with the flexibility to continue its testing of new stabilization/fixation agent recipes, and allow demonstrated treatment methods to be instituted at the facility without having to trigger formal Part B permit modification procedures. The waste codes at issue include:

D002, D003, and D012-D043.

Response:

The Agency disagrees. No information has been submitted which would indicate that this type of treatment is feasible. Furthermore, if the permittee can demonstrate that one of the above codes can be successfully stabilized, the request would be a class 1 modification which is essentially a letter of approval from the Agency as requested in your comment.

Comment #50:

Attachment A,...For Stabilization/Fixation, Attachment D, Condition H.2

CHCI objects to the proposed limitation on hazardous waste codes F006-F012 and F019. The Land Disposal Restrictions (LDR) in 40 CFR 268 do not require wastes with a concentration-based standard to be treated using Best Demonstrated Available Technology (BDAT) methodology. In fact, the LDR allows waste with a concentration-based

standard to be treated by any method so long as the treated waste achieves compliance with the concentration standard without impermissible dilution having occurred. Since all of the LDR treatment standards for codes F006-F012 and F019 appear in 40 CFR 268.41 Table CCWE and 268.43 Table CCW, no specific method of treatment is required. Please strike the footnote and all references to it.

Response:

See the response to Comment #49.

Comment #51:

Attachment A,...For Storage and Transfer

The Agency has included hazardous waste codes F037 and F038 to the list of hazardous wastes authorized for storage and transfer. CHCI notes that these codes were inadvertently omitted from the most recent RCRA Part A form. A new Part A form is included with this submittal.

Response:

The Agency acknowledges receipt of your revised Part A form.

Comment #52:

Attachment A,...For Storage and Transfer

CHCI has identified ten (10) hazardous waste codes which were inadvertently omitted from previous submittals. CHCI requests that the following waste codes be added to the list of codes which are approved for storage and transfer: K141-K145 and K147-K151.

Response:

The Agency agrees that the proposed change is reasonable and has modified the permit accordingly.

Comment #53:

Attachment A,...For Storage and Transfer

Page 95-For the sake of consistency with the other lists of codes, please add the section letter "D" prior to the title.

Please add waste code number "P041" [diethyl-p-nitrophenyl phosphate] to the appropriate position in the column of hazardous waste code numbers.

Delete hazardous waste code P107. This code no longer appears in 40 CFR 261 or 35 IAC Part 721.

Page 98-For the sake of consistency with other lists of codes, please add the section letter "E" prior to the title.

Response:

The Agency agrees that the proposed changes are reasonable and has modified the permit accordingly.

Comment #54:

Attachment B, Table II: General Inspection Schedule

For the item concerning "Fire Extinguishers", please change the frequency of inspections from daily to monthly for all inspection elements other than maintaining proper access. This change is in keeping with OSHA (see 29 CFR 1910.157(e)) and NFPA inspection requirements/recommendations.

Please delete the item concerning "Fire Department Pull Stations". The facility is in equipped with such devices, nor are any planned for installation.

Response:

The Agency agrees that the proposed changes are reasonable and has modified the permit accordingly. Notification of facility personnel to fires can be accomplish by the intercom system.

Comment #55:

Attachment B

CHCI notes that the following documents included as part of CHCI's RCRA Part B permit application will be modified as necessary upon final permit issuance to conform to the information contained in Attachment B, Table I-IV, of the draft permit.

Response:

The Agency has reviewed your comment and finds that it is accurate.

Comment #56:

Attachment D, Condition A.1

CHCI reserves the right to dedicate one or more storage tanks for blended fuels containing a heating value of less than 5,000 BTU/lb. Certification of compliance would then be provided only for those facilities to which CHCI actually ships any hazardous waste fuel that is derived from a less than 5,000 BTU/lb. source.

Response:

The Agency has reviewed your comment and finds that it is acceptable.

Comment #57:

Attachment D, Condition A.2.a

To clarify, manifest discrepancies which are reconciled by contacting the generator are noted in the discrepancy section (Item No. 19) of the manifest. No additional record is made or required. The manifests are maintained as part of the operating record.

Response:

The Agency has reviewed your comment and finds that it is acceptable.

Comment #58:

Attachment D, Condition A.3

Please change the phrase "total chlorine is" to "total halogens are" for consistency with 40 CFR 279. (formerly 40 CFR 266.40) and 35 Ill. Adm. Code 726.140.

Response:

The Agency agrees that the proposed change is reasonable and has modified the permit accordingly.

Comment #59:

Attachment D, Condition A.4

In sentence 1, please change the phrase "Before any wastes" to "Before any waste other than lab packs or wastes with no free liquids" to clarify that the compatibility test is not required for solids or lab packs.

Response:

The Agency agrees that the proposed change is reasonable and has modified the permit accordingly.

Comment #60:

Attachment D, Condition A.4.a

a) Please strike the phrase "in a seven day period". CHCI believes that the requirement to create a new composite sample every seventh day is excessive, and serves to create unnecessary worker exposure situations and a higher likelihood for spills or releases. If the facility has reason to believe that the composite sample is no longer representative, a storage bay may be resampled to produce a new composite sample.

b) CHCI submitted an additional comment proposing a new procedure.

Response:

a) Upon further discussions with the Agency, the permittee agrees to the seven day period. Therefore, the condition will remain as it currently exists.

b) The Agency has reviewed this new procedure and agrees that it is reasonable. Therefore, the permit has been changed accordingly.

Comment #61:

Attachment D, Condition A.4.b

Please change the phrase "with a composite sample of the tanks within the containment system" to with a sample of the waste in the tank".

Response:

Pursuant to 35 Ill. Adm. Code 703.241, "each RCRA permit issued under Section 39(d) of the Act shall contain terms and conditions which the Agency determines are necessary to protect human health and the environment." Due to the potential of incompatible wastes when mixed to produce violent reactions or noxious/toxic fumes, the Agency feels that this condition is needed.

Comment #62:

Attachment D, Condition A.4.b

In addition, for wastewater treatment storage activities, CHCI proposes that the compatibility test mixing ratio be modified to 10% incoming waste mixed with a 90% existing inventory. This ratio is warranted due to the large capacity of the tanks.

Response:

The sensitivity is maximized by conducting the test at equal portions of waste to the existing inventory. Based on this argument, the test shall remain as written.

Comment #63:

Attachment D, Condition A.5

Please add the following sentence to the end of Paragraph 2. "Full vertical depth samples are not required in cases of hardened solids or extremely viscous liquids." to account for the fact that certain materials are capable of being sampled using normal manual sampling devices.

Response:

The Agency agrees that the proposed change is reasonable for hardened solids but extremely viscous liquids may still have separate phases; therefore, the condition will be retain for that category of wastes.

Comment #64:

Attachment D, Condition E.2

Please delete Condition E.2 in its entirety. The specific secondary containment design requirements in 40 CFR Parts 260-280 and 35 IAC Parts 700-749 pertain only to those areas that are used for storage of hazardous wastes. As noted in previous submittals, with the exception of the bulk rolloff storage area for solids, none of the existing or proposed loading/offloading areas is or will be used for the storage of hazardous wastes. CHCI objects to the Agency proposal to impose storage unit design requirements (e.g., impermeable coating on exposed surface areas) on units or structures that are used for the temporary staging of hazardous waste (as opposed to storage or treatment). In our opinion, the proposed requirement is arbitrary and, considering the heavy truck traffic that such areas encounters, technically unwarranted since a thin surface coating provides minimal additional protection than is already afforded by a properly designed and constructed smooth concrete surface that is kept free of cracks and gaps.

Response:

USEPA considers concrete permeable to liquid hazardous waste. This is documented in a memorandum from Robert Dellinger, Chief of the Waste Treatment Branch, Office of Solid Waste, USEPA HQ, to Stan Siegel, Chief, Hazardous

Waste Facilities Branch, Region 2, dated March 16, 988 as well as the background documents used to develop the July 14, 1986 FR Tank Standards. another reference titled Effects of Substances on Concrete and Guide to Protective Treatments, 1986, publication number IS001.06T, published by the Portland Cement Association, indicates that rapid disintegration of concrete occurs when exposed to inorganic acid such as nitric acid (2%) and hydrochloric acid (10%). Slow disintegration of concrete occurs when exposed to alkaline salts (potassium sulfate, ammonium sulfate, ferric chloride). In addition, concrete is not impermeable to organics. Concrete is penetrated by mineral spirits, toluene and xylene and is disintegrated by cresols and phenols. These are some of the constituents of wastes that will be handled in these areas. This publication further states that surface treatments are generally used to prevent such disintegration. The hazards associated with spills in the unloading areas for either bulk liquids or containers are the same as those for the storage areas. The concrete in either area is considered permeable without an appropriate coating. Therefore, all areas should be awarded the same amount of protection to prevents risks to the environment. 35 Ill. Adm. Code 724.131 requires that the facility be designed to prevent releases to the environment. Section 39(d) of the Act states that each RCRA permit issued shall contain terms and conditions which the Agency determines are necessary to protect human health and the environment. Therefore, the condition, as worded in the permit, will remain.

Comment #65:

Attachment D, Condition F.1

Please modify sentence 3 to read "This includes spills of hazardous waste which exceed one (1) pound within the containment system." to clarify exactly which spills/releases are or are not reportable to the Agency.

Response:

The Agency agrees that the proposed change is reasonable but for consistency sake, the first sentence will be modified to conform to the reporting requirements contained in Condition II.H.1. Therefore, the first sentence will read as follows: "The Agency Field Office (Maywood) shall be notified within 24 hours of implementing the contingency plan unless the spill or leak is less than or equal to one pound in quantity and immediately contained and cleaned up".

Comment #66:

Attachment D, Condition F.2

The air modeling information that forms the basis for reporting is based on pure substances, not actual CHCI hazardous waste data. As such, please add the following statements to the end of Paragraph 1: "Reporting 'trigger' levels for spills/releases of mixtures or solutions of hazardous wastes may be based on the actual concentration(s) of the constituent(s) present in the hazardous wastes, and not on the total quantity amount of hazardous waste spilled/released, when constituent concentration information is available." The use of concentration data is consistent with the "reportable quantity" (RQ) reporting procedures found in US DOT regulation in 49 CFR Part 171 and USEPA CERCLA regulations in 40 CFR Part 300.

Response:

The air modelling is supposed to be based on a worst case scenario. The modelling uses conservative approaches to estimate air concentrations at distances from the point of release which may not be applicable at all times. Based on these reasons, we do not feel that allowing relaxation of the spill volumes would be protective of human health and the environment as required of the Agency pursuant to 35 Ill. Adm. Code 703.241. However, the following language will be added to the permit:

"The model spill volume may be adjusted without further modelling if an actual analysis of the waste on-hand is available. That is, the model volume may be multiplied by the inverse of the concentration (by weight percent) of the compound in question. This calculated spill volume would then be used to determine if the spill has a potential to impact areas offsite."

Comment #67:

Attachment D, Condition F.3, Attachment D, Condition F.4

Please change the Phrase "Within 60 days" to "Within 90 days".

Response:

The Agency agrees that the proposed change is reasonable and has modified the permit accordingly.

Comment #68:

Attachment D, Condition F.3.f

CHCI is of the opinion that the scope of the materials

required to be compiled and distributed under the terms of Condition F.3.f is too broad, and to a greater extent, simply unavailable. CHCI notes that there are no reference books available for the physical/chemical properties of hazardous wastes. IDLH values and TLV's simply do no exist for each process waste stream. CHCI proposes to continue to work with the response agencies on an individual basis to suit their particular needs and concerns, and will consider offering specialized training, and/or providing commercially available reference documents upon request.

Response:

The Agency did not intend that the facility provide IDLH and TLV information for each process stream but on the pure hazardous constituents that may be present in a waste stream. Most of this information is already contained in the April 13, 1993 submittal from Carlson Environmental, Inc.. Given this new scope, the Agency feels that the above condition is workable. Therefore, the condition will remain in the permit with the following language being added:

> "If the Permittee can provide documentation that the local police department, fire department and HAZmat unit do not want this information and that the information which has been provided to them is adequate for their needs, the Permittee may submit a class 1 modification to modify this condition."

Comment #69:

Attachment D, Condition G.3

CHCI objects to this Condition on the basis that the Bulk Solids Storage Area meets the 35 Ill. Adm. Code 725.275(b) design criteria and operation as required by 35 Ill. Adm. code 725.275(d) for the storage of containers holding non-liquid F020-F023, F026 and F027. Please delete this condition in its entirety.

Response:

Since concrete is considered permeable without a surface coating (see the response to Comment #63), this area (bulk solids storage pad), which does not have a surface coating, does not meet the requirements of 35 Ill. Adm. Code 724.275 because it is not impervious. Therefore, the condition will remain.

Comment #70:

Attachment D, Condition G.4

CHCI objects to this Condition on the basis that tightly closed waterproof tarps are maintained over each rolloff, thus minimizing the infiltration of precipitation of water into the rolloff.

Response:

According to 35 Ill. Adm. Code 724.131, the facility shall be operated in a manner to minimize the possibility of a release to the environment. Additionally, 35 Ill. Adm. Code 7003.241 states each RCRA permit issued under Section 39(d) of the Act shall contain terms and conditions which the Agency determines are necessary to protect human health and the environment. Since concrete is considered permeable without a surface coating (see the response to Comment #63), the Agency feels that wastes which may destroy the capability of the concrete to contain wastes to the environment should be minimized. Therefore, this condition will remain in the permit.

Comment #71:

Attachment D, Condition G.7

Please change "a minimum value of 6,000 BTU/lb and a maximum halogen content of 10%" to "a minimum value of 5,000 BTU/lb". CHCI notes that the USEPA's long-standing Sham Recycling Policy [see 48 FR 11157] has, since 1983, set the minimum heat value for a hazardous fuel at 5,000 BTU/lb. The limiting factor with respect to minimum BTU value and halogen content is set by the specific permit conditions imposed at the end-user facility, not at the intermediate fuel blending facility.

Response:

The 6,000 BTU/lb and 10% halogen content are based on your March 15, 1993 response for determining closure costs. Either the wastes must meet a minimum fuel specification for which the closure costs are based or their are no limitations placed on the type of wastes stored in this area and the closure costs are based on incineration. Based on your current application, the condition will remain as currently worded.

Comment #72:

Attachment D, Condition H

The use of the term "stabilization facility" may be misleading and somewhat confusing. As noted in our March 15, 1993 submittal, fixation/stabilization activities are proposed for rolloffs or other containers staged in: Building No. 3; the Bulk Solids Storage Pad; or container

loading/unloading areas: Building No. 2; and in the Bulk Unloading Pad adjacent to the sump area. Please change the term "stabilization building" to "stabilization area".

Response:

The original application contained only the stabilization building. Due to time restraints, the Agency did not have time to review propose changes to the facility contained in the March 15, 1993 NOD response at this late stage when drafting the permit. Therefore, the Agency does not consider these additional areas to be permitted for this activity. Furthermore, this is a treatment activity and the area must be specifically identified in the permit. Subsequently, these areas would have to have been covered in the application. This was not done. Of particular note is the lack of an engineering evaluation for the bulk unloading pad adjacent to receiving sumps 1-4, the general container loading/unloading area (next to building #2) or inside building #2 next to the permitted areas. Since CHCI has the ability to address their concern through modification of the permit, the condition as worded will remain in the permit. This type of modification would be a class 1*.

Comment #73:

Attachment D, Condition H.3

Please delete sentence 1 regarding specific respiratory protection equipment to be worn by personnel inside Building No. 3 since the levels of protection required by

OSHA may be more or less stringent than that required by that provision depending upon the actual material being processed. All activities in Building No. 3 and elsewhere at the facility are conducted in accordance with OSHA standards and Clean Harbors Corporate Health & Safety Program. The selection of respiratory protection and other personnel protection equipment is properly conducted on a case-by-case basis which takes into consideration the unique chemical/physical characteristics of the specific waste being handled.

Response:

The Agency feels that fugitive emissions may be present due to the operations conducted in the building based on past Agency observations of similar operations. Pursuant to 35 Ill. Adm. Code 703.241, each RCRA permit shall contain terms and conditions which the Agency determines are necessary to protect human health and the environment. Based on concerns to worker health, this condition will remain.

Comment #74:

Attachment D, Condition H.4.d

Condition H.4.d appears twice in the text. Please delete the second entry.

Response:

The Agency agrees that the proposed change is reasonable and has modified the permit accordingly.

Comment #75:

Attachment D, Condition H.6

Please change the term "at the end of each eight hour operating shift" to "at the end of the stabilization processing activity". From an operational standpoint, it is highly inefficient to halt the stabilization process and initiate cleanup activities (i.e., washing) before the job is actually complete. CHCI is sensitive to the Agency's concern that the stabilization processing areas be kept as clean and well-maintained as possible, and will strive to maintain the areas in proper operating condition at all times. In our opinion, there is no additional threat or adverse impact to human health and the environment by not conducting a cleanup prior to a shift change.

Response:

The Agency does not intend that cleaning interrupt the stabilization processing activity but does intend that the mixing area and equipment be cleaned routinely to minimize tracking of waste. Therefore, the condition will be modified to read as follows: "The areas heavily trafficked during transport of the waste to and from the mixing unit shall be cleaned at the end of each eight hour operating shift as time and circumstances allow."

Comment #76:

Attachment D, Condition H.8.a

Please change "The treated waste shall not be sent for landfill disposal" to The treated waste shall not be placed into a land disposal unit". CHCI must be allowed a certain degree of flexibility (to ship treatment residuals to offsite facilities) in the event that: 1) the CHCI stabilization/fixation recipe proves to be unsuccessful; and/or 2) additional treatment methods not conducted by CHCI are needed prior to the waste being deemed suitable

for placement in an offsite land disposal unit. In the event of an unsuccessful or partially-successful treatment, CHCI shall ship the treatment residuals to an offsite treatment or disposal facility and, in accordance with LDR requirements, provide to the receiving facility a "certification" for all treatment standards that have been achieved, and/or a "notification" for all constituents which do not meet applicable LDR standards.

Response:

The Agency agrees that the proposed change is reasonable and has modified the permit accordingly.

Comment #77:

Attachment D, Condition H.8.c

Please delete the term "waste pile" since CHCI is not seeking authorization to manage hazardous wastes in such a unit.

Response:

The Agency agrees that the proposed change is reasonable and has modified the permit accordingly.

Comment #78:

Attachment D, Condition H.8.e.iii.1

Please delete in its entirety.

Response:

The Agency will rewrite the condition in the following fashion to address your concerns:

1) Treated waste which fails to meet the requirements shall receive additional treatment (this may consist of additional curing time, reintroduction into the treatment facility for further stabilization or transfer to another facility for additional treatment,

2) In no event shall the waste be placed in a land disposal unit until the waste meets the applicable LDR standards

Comment #79:

Attachment D, Condition H.9

Please delete in its entirety. The penetrometer test is

one that should be conducted at the receiving land disposal facility prior to placement of the waste in the actual land disposal unit, not at the site of generation or at an intermediate treatment facility such as CHCI.

Response:

The Agency disagrees. 35 Ill. Adm. Code 729.310(b) states no person shall engage in the treatment of a liquid hazardous waste and cause, threaten or allow the disposal in a landfill unless the residual meets one of the following... 3) Solidification: The residual possesses a load bearing capacity of at least 2.0 tons per square foot as determined by application of the test procedure in 35 Ill. Adm. Code 729.321.

Comment #80:

Attachment D, Chemical Oxidation

For consistency with other sections of the permit, please add the letter "I" to the section title.

Response:

The Agency agrees that the proposed change is reasonable and has modified the permit accordingly.

Comment #81:

Attachment D, Chemical Oxidation

CHCI requests that, instead of excluding such codes from the Part B Permit, the Agency conditionally approve the codes and include them in the Permit with a provision that treatment cannot commence until such time that CHCI has submitted and the Agency has approved in writing the treatment of the code(s). This approach would provide CHCI with the flexibility to continue its testing of chemical oxidation treatment schemes, and allow demonstrated treatment methods to be instituted at the facility without having to trigger formal Part B permit modification procedures. The waste codes at issue include:

D019, D021-D027, D036-D038 and D041-D043

Response:

See the response to Comment #49.

Comment #82:

Attachment D, Carbon Adsorption

For consistency with other sections of the permit, please add the letter "J" to the section title.

Response:

The Agency agrees that the proposed change is reasonable and has modified the permit accordingly.

Comment #83:

Attachment D, Carbon Adsorption

Please delete the phrase "or the applicable LDR standard". The LDR treatment standards do not apply to wastewaters discharged to a publicly owned treatment works (POTW) unless those levels are adopted by the POTW as part of their pretreatment discharge parameters.

Response:

The Agency agrees that the proposed change is reasonable and has modified the permit accordingly. However, the Agency has added the following language to address the situation if the wastewater is not discharged to the sewer:

> For wastewater shipped offsite (in accordance with the LDR requirements), the permittee shall provide to the receiving facility a "certification" for all treatment standards that have been achieved, and/or a "notification" for all constituents which do not meet applicable LDR treatment standards.

Comment #84:

Attachment F, Condition II.2

The Phase I Report will only address the media of concern designated in Condition IV.B.1 of the permit (i.e., soil). Therefore, please delete the words "or air" in the three (3) places it appears in Section II.2

Response:

See the response to Comment #37 above. The wording will be changed to reflect that the RFI Report will require information on all environmental media of concern as determined by the RFI Phase I investigation.

Comment #85:

Attachment F, Condition II.3

According to the permit conditions, data from the Phase I

RFI is used to determine the need for a Phase II RFI. The need for a Phase III RFI is determined from the data in the Phase II RFI Report. This section references the need for Phase III being based on data from the "Phase I or II" RFI. Please change "Phase I or II" to "Phase II".

Response:

See the Agency response to Comment #34 above. The current wording will remain in the permit.

Comment #86:

Attachment F, Condition III.D.1.a, III.D.2.(11), III.D.4.d(5) & III.E

For consistency with the permit conditions, it should be clarified that the reference to SW-846 is to the "Third Edition".

Response:

The reference is noted and the permit will be revised accordingly.

Comment #87:

Attachment F, Condition III.D..b.

Please delete this section. The basis for this deletion is as follows:

There is no "Waste Liquid Burning Process" or any burning process at the Clean Harbors of Chicago, Inc. facility; and

There is no area designated as the "Waste Solvent Storage Area". Waste solvents are stored in containers within specially designed container storage areas. According to Permit Condition IV.B.1, the media of concern for which investigation is required is soil.

Response:

The Agency agrees that the proposed change is reasonable and has modified the permit accordingly.

Comment #88:

Attachment F, Condition III.G

This section needs to be clarified to address the formal process and submittals which the Agency requires. The Facility Action Schedule and the RFI Implementation

Schedule in Attachment F, Section V, refer to an "Interim Measures Plan" and "Interim Measures Report", neither of which are addressed in Section III.G.

Response:

Implementation of interim measures are addressed in Section G of Attachment F to the permit. Within this section, specific information required for implementation of interim measures is listed, including scheduled for progress reports. While the terms "Interim Measures Report" and Interim Measures Plan" are not specifically referenced within this section, it is noted that Attachment F, Section G of the permit does infer these types of items will be required. In an effort to clarify the components of interim measures implementation, the Agency will identify the terms "Interim Measures Plan" and "Interim Measures Report" in this section of the permit.

Comment: #89:

This section has two schedules. Please combined these into one schedule. Using the second schedule as the guide, the following changes need to be made:

The due date for the submittal of the RFI Phase I Workplan should be 120 days, not 90 days.

The due date for the submittal of the RFI Phase II Workplan should be 90 days, not 60 days.

It is suggested that the dates for the quarterly progress reports be listed in chronological.

Add facility actions and due dates for submittal of the Phase III Workplan and submission of the Phase III Report and Summary

Please clarify what has to be submitted (see the earlier discussion regarding Section III.G)

Response:

The proposed request appears reasonable and the Agency will clarify the schedule in the final permit. Information which is to be submitted within the subject reports is outlined in Attachment F, the Scope of Work for the RFI.

Agency Comments

The Agency has made the following clarifications or corrections to the Permit:

Comment #1:

There were several typographical errors contained within the draft permit which have been corrected in the final permit:

i) In Section I, Condition B.1.a, the following unit was not identified:

3) The Inside Lab Pack Area (within Processing Building No. #1)

ii) In Attachment D, Condition F.2, the following entities were left off:

3. the Agency Field Office (Maywood)
4. the Illinois Emergency Management Agency (IEMA)
5. the National Response Center
6. the Local Emergency Planning Committee
7. the Metropolitan Water Reclamation District of Greater Chicago

iii) In Attachment D, Condition F.2, the following language was left off:

b. The information which must be initially relayed to each includes:

1. the type of emergency (release, fire or explosion);

iv) In Attachment D, Condition F.3, the following language was left off:

d. a description of the procedures used to handle waste at the facility;

e. an estimate of the quantity of the various types of waste which may be present at the facility and an estimate of the typical inventory of wastes at the facility;

Comment #2:

In the March 15, 1993 NOD response, CHCI indicated that the proposed location of the Bulk Solids Storage Pad and

the Medical Waste Storage Pad would be moved to a new location 70 feet from their current proposed position. The Agency agrees to the change if the site drawings are modified to reflect this proposed change and submitted to the Agency with a cover letter.

Comment #3:

In the past, state permits allowed the management of hazardous wastes in a manner which differ from the proposed RCRA permit. The final RCRA permit dictates how hazardous wastes will be handled at the facility when it becomes effective. Therefore, the following activities are no longer permitted:

1) the treatment of characteristic (D002 only) oil within Process Building #2, and

2) the bulking of hazardous wastes (which do not contain free liquids) within Process Building #2.

A note regarding the nonpermitted status of these activities will be added to the permit.

Comment #4:

Attachment D, Condition E.2

" The coatings, caulking and/or sealant shall be applied by September 30, 1994. Within thirty days, but no later than October 30, 1994, after providing a coating /sealant to render the base impervious to wastes and precipitation, the Permittee shall submit to the Agency a certification from an Illinois Registered Professional engineer attesting to this fact. The certification shall contain the information described in Attachment C."

This additional language was added to inform the Permittee when and to what extent, documentation is needed to demonstrate compliance with the conditions in their permit.

Comment #5:

Attachment H

This section was included to identify the financial assurance amounts required for closure.

Comment #6:

For clarafication purposes, the word Permittee has been changed to Permittee(s) throughout the permit to indicate

that there are (2) entities. Additionally, in Attachment F, the Illinois International Port District was identified as one of the Permittee(s).

FOR FURTHER INFORMATION

Questions about the public hearing process and the RCRA/HSWA permit should be directed as follows:

(Public Hearing Procedures & Exhibits)

John Williams, Agency Hearing Officer
Illinois EPA
2200 Churchill Road
Post office Box 19276
Springfield, Il 62794-9276
217/782-5544

(Permits & Appeal Process)

Mara McGinnis
Government and Community Affairs
Illinois EPA
2200 Churchill Road
Post Office Box 19276
Springfield, Il 62794-9276
217/782-5562

Signed: John Williams/JCJ Dated: _____

RCRA FINAL PERMIT SIGN-OFF

BACKGROUND

FACILITY NAME (Owner/Operator) CLEAN HARBORS OF CHICAGO, INC.
FACILITY LOCATION Chicago, Illinois ID NUMBER ILD000608471

TYPE OF PERMIT

X HSWA ___ Post-Closure ___ Class 3 Mod ___ Other ___

X STORAGE X TREATMENT ___ BIF ___ DISPOSAL
___ Subpart X

REVIEW PACKAGE CONTENT

X Final Permit w/Attachments
X Response to Comments
___ Facility Letter
___ Letter to Commentors
X Administrative Record Index
___ Administrative Record
X Other Letter to IEPA

APPLICABLE PERMIT CONDITIONS

X Land Disposal Restrictions
X Toxicity Characteristic
___ Waste Minimization
___ Corrective Action
X Air Emissions
___ Other ___

CONCURRENCES

		INITIALS	DATE
1.	PERMIT WRITER Name: Juana E. Rojo	JER	9-24-93
2.	SECTION SECRETARY	—	—
3.	SECTION CHIEF	DH	9-24-93
4.	TECHNICAL EXPERT (if applicable)		
5.	RPB SECRETARY (logged only)		

If U.S. EPA public noticed the draft permit, the package must go through PMB for sign-off. Please cross out if not applicable:

	RDS CHIEF		
6.	ASST. REG. COUNSEL (ORC) Name: ZUSMAN	NZ	9/24/93
7.	PERMIT COORDINATOR (ORC)	JB	9/27/93
8.	SWERB SECTION CHIEF (ORC)	TZN	9/24/93
9.	SWERB CHIEF (ORC)	/	/
10.	RPB SECRETARY	[illegible]	9/27/93
11.	RPB CHIEF	KEB	9/27/93
12.	OR SECRETARY	[illegible]	9/27/93
13.	ASSOCIATE DIV. DIRECTOR, OR	[illegible]	9/27
14.	~~WMD DIRECTOR~~		

REVISED 3/92

CLEAN HARBORS

Illinois Environmental Protection Agency · P. O. Box 19276, Springfield, IL 62794-9276

217/782-2113

OPERATING PERMIT

RECEIVED
FEB 08 1993
OFFICE OF RCRA
Waste Management Division
U.S. EPA, REGION V

PERMITTEE

Clean Harbors of Chicago, Inc.
Attn: James R. Laubsted
11800 S. Stony Island Avenue
Chicago, Illinois 60617

Application No.: 91090060
I.D. No.: 031600BTE
Applicant's Designation: Compactor
Date Received: August 17, 1992
Subject: Compactor
Date Issued: October 5, 1992
Expiration Date: September 30, 1995
Location: 11800 S. Stony Island Avenue, Chicago

Permit is hereby granted to the above-designated Permittee to OPERATE emission source(s) and/or air pollution control equipment consisting of a shredder and compactor with carbon canister as described in the above-referenced application. This Permit is subject to standard conditions attached hereto and the following special condition(s):

1. This permit is issued based on negligible emissions of nitrogen oxides (NO_x) and organic material (OM) from the shredder and compactor. For this purpose emissions of each contaminant shall not exceed nominal emission rates of 0.1 lb/hour and 0.44 ton/yr.

2a. The permittee shall install a carbon adsorption system with a saturation indicator, prior to operating the shredder and compactor unit, to control organic material emissions.

b. The permittee shall change the carbon filters when the saturation indicator indicates that the carbon is saturated.

c. The permittee shall keep records of the maintenance and operation of the carbon adsorption system including the replacement of the carbon filters. These records shall be retained for three years and shall be available for inspection by the Agency.

3. The Permittee shall submit the records required in Condition 2c upon renewal of permit.

4. Containers or materials that had contained RCRA type waste shall be triple rinsed prior to shredding or compacting.

5. The Permittee shall not shred or compact aerosol cans without obtaining written approval from the Agency.

6. In the event that the operation of this facility results in an odor nuisance or other nuisance due to the use of waste as a raw material or any other cause, the applicant shall take all appropriate and necessary actions, including but not limited to, changes in raw material or installation of controls, in order to eliminate the nuisance.

If you have any questions on this, please call Art. G. Rusiana at 217/782-2113.

Donald E Sutton

Donald E. Sutton, P.E.
Manager, Permit Section
Division of Air Pollution Control

DES:AGR/mls/468Z/87-88

cc: Region 1

COMPACTOR CARBON SYSTEM MAINTENANCE LOG

CARBON START DATE 3/16/92

DATE	MAINT. CHECK	HNU READINGS (TIME)
3/16/92	OK	1 PPM 7:30 PM
4/2/92	OK	1 PPM NOON
4/8/92	OK	1.5 PPM 1PM, 1.7 PPM 1:55 PM
4/15/92	OK	1.9 PPM 1PM, 2.0 PPM 3PM
		5.0 PPM 5PM, 6.0 PPM 7PM
4/16/92	OK	6 PPM 10:45AM, 5.5 PPM 12:45PM
		5 PPM 2:45 PM, 5.0 PPM 4:45 PM
4/17/92	OK	6 PPM 1PM, 6 PPM 3PM
		6 PPM 5PM
4/21/92	OK	5 PPM 11:45AM, 3 PPM 1:45 PM
		3 PPM 3PM
4/22/92	OK	2 PPM 10:30 AM, 3 PPM 12:05 PM
		3 PPM 2:05 PM
4/28/92	OK	5 PPM 3PM
5/7/92	OK	6 PPM 4PM
6/23/92	OK	3 PPM 1:30 PM, 3 PPM 3:10 PM
6/24/92	OK	2.5 PPM 1:45 PM
6/27/92	OK	3 PPM 3:45 PM, 3 PPM 4:30 PM
7/2/92	OK	3 PPM NOON, 3 PPM 2PM
		4 PPM 4PM
7/7/92	OK	5 PPM NOON, 4 PPM 2PM
		5 PPM 4PM
7/8/92	OK	6 PPM 10AM, 7 PPM NOON
		8 PPM 2PM
7/9/92	OK	5 PPM 11AM, 6 PPM 1PM
		6 PPM 3PM, 7 PPM 4PM

COMPACTOR CARBON SYSTEM MAINTENANCE LOG

DATE	MAINT CHECK	HNu READINGS (TIME)			
8/7/92	OK	7 PPM	1PM		
8/21/92	OK	10 PPM	9:30AM,	8 PPM	9:30AM
		10 PPM	11:30AM,	17 PPM	1:30PM
9/16/92	OK	3 PPM	3PM		
9/17/92	OK	5 PPM	9:30AM,	4 PPM	11:30AM
		4 PPM	1:30PM		

or part of the
yees) assumes any
r operation of the pr
disposal of air
minants
tection Act
lations

CALCULATION SHEET

FACILITY; Clean Harbors of Chicago
ANALYST; JSN
DATE; 12/19/91

ID; 031600BTE
PN; 91090060
DATE REC;11/19/91

Joint construction and operating permit reopened for a portable shredder and compactor.

NO QRPT, LEGAL, FLAG, NSP/SHAP
CROPA--per discussion with Mark Schollenberger of the DLPC--ok to grant; will send as a cropa permit.

This permit was rejected for more detailed information of the types of material used, emissions estimates and precautions taken during the use of this equipment.

The compactor is a portable unit which will be used in the bay drum area. The compactor has the necessary precautions for cases of fire.

The system also has an activated carbon adsorber for emissions during compacting. This is also used to prevent odor. The nitrogen inerting will also control odors. No aerosol cans will be compacted.

The nitrogen purge system will be used only 50% of the time the compactor is operating. The system is a closed system.

Wastes compacted include:
debris-soil, wood, dirt, rock, cardboard, PPE, absorbent materials
protective equipment--tyvek suits, boots, gloves filters, rags, ...
off specification
pharmaceuticals
filters,cartridges
absorbent socks and pillows, rags
RCRA empty containers--bottles, jars, cans-non aerosol
lab vials

Recommend to grant this permit with negligible emissions of VOM and NOx and to add the conditions for the carbon cannister system and the condition for any odor nuisances.

CleanHarbors
OF CHICAGO, INC.
11800 S. STONY ISLAND AVENUE
CHICAGO, IL 60617
(312) 646-6202

CERTIFIED MAIL - RETURN RECEIPT REQUESTED - ARTICLE #P 377 858 597

November 14, 1991

RECEIVED
NOV 19 1991
EPA-DAPC-SPFLD.

Permit Section
ILLINOIS ENVIRONMENTAL PROTECTION AGENCY
Division of Air Pollution Control
P.O. Box 19276
Springfield, Illinois 6274-9276

Dear Sir:

Clean Harbors of Chicago, Inc. ("Clean Harbors") is submitting a permit application for a compactor at the facility. Presently, Clean Harbors manually compacts wastes inside containers with a tamper tool. Wastes that are typically compacted include contaminated personnel protective equipment (e.g. tyvek suits, boots, gloves, etc.), filters, small containers, rags, and other solid debris.

Clean Harbors has decided to upgrade this operation by replacing the manual compaction procedure with a semi-automatic compacting device manufactured by Compaction Technologies (see enclosed literature).

Clean Harbors believes that the compaction operation is not considered "treatment" pursuant to Illinois EPA Hazardous Waste Rules, Section 720.110.

Wastes that are compacted will be identical to the waste prior to compaction, as far as the physical, biological, and the chemical composition of the waste. The waste is not neutralized, nor is energy or material resources recovered, nor is the waste rendered non-hazardous or less hazardous, nor is it rendered safer to transport, store or dispose of, nor make it more amenable for recovery, nor more amenable for storage or reduce in volume.

The "act" of compaction does <u>not</u> reduce the volume of waste, it only allows more wastes to go into a container. As an example; Clean Harbors has two (2) containers full of contaminated tyvek suits, each drum weighs 200 pounds. The two (2) drum contents are compacted into one (1) drum. The compacted waste still weighs 400 pounds.

The unit is a Compacting Technologies International CTI Pro 8560. The compactor is a movable unit which will be operated in the appropriate containment bay of the drum storage areas where the material being processed is compatible. The compaction system meets NEMA 7 Class 1, Division 1 electrical standards and meets NFPA Guidelines for hazardous atmospheres. A nitrogen purge is included to inert the system during compaction. The system also has an electronic temperature control probe and connecting dry chemical extinguisher system in case of fire. The system also includes an activated carbon adsorber for emissions during compaction. The compactor includes a drum crusher attachment which will be used to crush RCRA empty drums.

To operate the unit, a drum is placed into the barrel containment chamber which completely surrounds the drum. The unit is closed and a special pump removes liquids which are pumped to a separate container. A hydraulic ram compacts material in the drum without distorting the drum. A "quick chute", described in the literature, in utilized to load additional material without opening the chamber door. Upon completion of compaction, the drum is removed and readied for shipment off-site.

The containers crushed with the crushing attachment will be RCRA empty. The type of containers include 55 gallon and smaller drums, pails, cans, and bottles. The materials of construction include steel, plastic, and glass.

When switching from hazardous waste to non-hazardous waste, the unit will be decontaminated by removal of any waste material and a triple rinse. The rinse material would be an aqueous acid solution, aqueous alkaline solution, or organic solution that will depend on the waste material last compacted. The solution must be an appropriate decon material for the waste, and it must be compatible. Wipe tests will be performed to insure decontamination. All decon material will be handled as a hazardous waste.

The nitrogen purge system on the compactor will be used whenever materials which could volatilize are being compacted. It is estimated that the unit will be operated 50 hours per week on average, with approximately 50% of the material requiring the nitrogen purge system. Because the system uses N_2 , no NOX emissions are expected during the nitrogen purge.

To prevent an odor problem during operation, the unit is equipped with an activated carbon adsorber. Clean Harbors does not intend to compact materials which are odorous. The nitrogen inerting will also control odors.

The nitrogen purge system will inert the chamber during compaction. This procedure should prevent explosions or fires in the compactor. No aerosol cans will be compacted in the unit.

To prevent volatile organic emissions from the compactor, a carbon adsorption system is used. A diagram of the system and manufacturer's data of carbon adsorption capacities for many organics are included.

The following hazardous and non-hazardous materials would be compacted in the unit: debris (mixtures of soil, wood, dirt, rocks, cardboard, PPE, absorbent materials), off-specification products, personnel protection equipment (suits, boots, gloves, garments), pharmaceuticals, filters, cartridges, absorbent socks/pillows, RCRA empty containers (bottles, jars, cans), lab vials, rags, etc. These materials could be hazardous waste.

Information on the compactor is included as an attachment. If you have any further questions on this permit application, please contact me at 312/646-6202.

Sincerely,

CLEAN HARBORS OF CHICAGO, INC.

James R. Laubsted
Compliance Manager

Enclosure

JRL/mk

STATE OF ILLINOIS
ENVIRONMENTAL PROTECTION AGENCY
DIVISION OF AIR POLLUTION CONTROL
2200 CHURCHILL ROAD
SPRINGFIELD, ILLINOIS 62794-9276

APPLICATION FOR PERMIT(A)	FOR AGENCY USE ONLY
[X] CONSTRUCT [X] OPERATE	I.D. NO. 031-600-BTE
	PERMIT NO.
NAME OF EQUIPMENT TO BE CONSTRUCTED OR OPERATED COMPACTOR (B)	DATE 11-19-91

1a. NAME OF OWNER: Clean Harbors of Chicago, INC.		2a. NAME OF OPERATOR: Clean Harbors of Chicago, INC.	
1b STREET ADDRESS OF OWNER: 11800 S. Stony Island Avenue		2b. STREET ADDRESS OF OPERATOR: 11800 S. Stony Island Avenue	
1c. CITY OF OWNER: Chicago		2c. CITY OF OPERATOR: Chicago	
1d. STATE OF OWNER: Illinois	1e. ZIP CODE: 60617	2d. STATE OF OPERATOR: Illinois	2e. ZIP CODE: 60617

3a. NAME OF CORPORATE DIVISION OR PLANT: Clean Harbors of Chicago, INC.		3b. STREET ADDRESS OF EMISSION SOURCE: 11800 S. Stony Island Avenue		
3c. CTIY OF EMISSION SOURCE: Chicago	3d. LOCATED WITHIN CITY LIMITS: [X] YES [ ] NO	3e. TOWNSHIP:	3f. COUNTY: COOK	3g. ZIP CODE: 60617

4. ALL CORRESPONDENCE TO: (TITLE AND/OR NAME OF INDIVIDUAL) James R. Laubsted	5. TELEPHONE NUMBER FOR AGENCY TO CALL: (312) 646-6202
6. ADDRESS FOR CORRESPONDENCE: (CHECK ONLY ONE) [ ] OWNER [ ] OPERATOR [X] EMISSION SOURCE	7. YOUR DESIGNATION FOR THIS APPLICATION:(C) COMPACTOR

8. THE UNDERSIGNED HEREBY MAKES APPLICATION FOR A PERMIT AND CERTIFIES THAT THE STATEMENTS CONTAINED HEREIN ARE TRUE AND CORRECT, AND FURTHER CERTIFIES THAT ALL PREVIOUSLY SUBMITTED INFORMATION REFERENCED IN THIS APPLICATION REMAINS TRUE, CORRECT AND CURRENT. BY AFFIXING HIS SIGNATURE HERETO HE FURTHER CERTIFIES THAT HE IS AUTHORIZED TO EXECUTE THIS APPLICATION.

AUTHORIZED SIGNATURE(S):(D)

BY [signature]	11/14/91	BY [signature]	11/14/91
SIGNATURE	DATE	SIGNATURE	DATE
Joseph McNally		James R. Laubsted	
TYPED OR PRINTED NAME OF SIGNER		TYPED OR PRINTED NAME OF SIGNER	
VICE-PRESIDENT		Compliance Manager	
TITLE OF SIGNER		TITLE OF SIGNER	

RECEIVED
NOV 19 1991
IEPA—DAPC—STI

(A) THIS FORM IS TO PROVIDE THE AGENCY WITH GENERAL INFORMATION ABOUT THE EQUIPMENT TO BE CONSTRUCTED OR OPERATED. THIS FORM MAY BE USED TO REQUEST A CONSTRUCTION PERMIT, AN OPERATING PERMIT, A CONSTRUCTION OR OPERATING PERMIT.

(B) ENTER THE GENERIC NAME OF THE EQUIPMENT TO BE CONSTRUCTED OR OPERATED: THIS NAME WILL APPEAR ON THE PERMIT WHICH MAY BE ISSUED PURSUANT TO THIS APPLICATION. THIS FORM MUST BE ACCOMPANIED BY OTHER APPLICABLE FORMS AND INFORMATION.

C) PROVIDE A DESIGNATION IN ITEM 7 ABOVE WHICH YOU WOULD LIKE THE AGENCY TO USE FOR IDENTIFICATION OF YOUR EQUIPMENT. YOUR DESIGNATION WILL BE REFERENCED IN CORRESPONDENCE FROM THIS AGENCY RELATIVE TO THIS APPLICATION. YOUR DESIGNATION MUST NOT EXCEED TEN (10) CHARACTERS.

(D) THIS APPLICATION MUST BE SIGNED IN ACCORDANCE WITH 35 ILL. ADM. CODE 201.154 OR 201.159 WHICH STATES: "ALL APPLICATIONS AND SUPPLEMENTS THERETO SHALL BE SIGNED BY THE OWNER AND OPERATOR OF THE EMISSION SOURCE OR AIR POLLUTION CONTROL EQUIPMENT, OR THEIR AUTHORIZED AGENT, AND SHALL BE ACCOMPANIED BY EVIDENCE OF AUTHORITY TO SIGN THE APPLICATION."

IF THE OWNER OR OPERATOR IS A CORPORATION, SUCH CORPORATION MUST HAVE ON FILE WITH THE AGENCY A CERTIFIED COPY OF A RESOLUTION OF THE CORPORATION'S BOARD OF DIRECTORS AUTHORIZING THE PERSONS SIGNING THIS APPLICATION TO CAUSE OR ALLOW THE CONSTRUCTION OR OPERATION OF THE EQUIPMENT TO BE COVERED BY THE PERMIT.

ATION CONTAIN A PLOT PLAN/MAP:

[X] NO

PLAN/MAP HAS PREVIOUSLY BEEN SUBMITTED, SPECIFY:

I.D. NUMBER 0 3 1 6 0 0 B TE APPLICATION NUMBER 8 3 1 2 0 0 1 7

APPROXIMATE SIZE OF APPLICANT'S PREMISES LESS THAN 1 ACRE?

[ ] YES [X] NO: SPECIFY 26 ACRES

DOES THIS APPLICATION CONTAIN A PROCESS FLOW DIAGRAM(S) THAT ACCURATELY AND CLEARLY REPRESENTS CURRENT PRACTICE.

[X] YES [ ] NO

11a. WAS ANY EQUIPMENT, COVERED THIS APPLICATION, OWNED OR CONTRACTED FOR, BY THE APPLICANT PRIOR TO APRIL 14, 1972:

[ ] YES [X] NO

IF "YES" ATTACH AN ADDITIONAL SHEET, EXHIBIT A, THAT:

(a) LISTS OR DESCRIBES THE EQUIPMENT

(b) STATES WHETHER THE EQUIPMENT WAS IN COMPLIANCE WITH THE RULES AND REGULATIONS GOVERNING THE CONTROL OF AIR POLLUTION PRIOR TO APRIL 4, 1972

11b. HAS ANY EQUIPMENT, COVERED BY THIS APPLICATION, NOTPREVIOUSLY RECEIVED AN OPERATING PERMIT:

[ ] YES [X] NO

IF "YES", ATTACH AN ADDITIONAL SHEET, EXHIBIT B, THAT:

(a) LISTS OR DESCRIBES THE EQUIPMENT

(b) STATES WHETHER THE EQUIPMENT

(I) IS ORIGINAL OR ADDITIONAL EQUIPMENT

(II) REPLACES EXISTING EQUIPMENT, OR

(III) MODIFIES EXISTING EQUIPMENT

(c) PROVIDES THE ANTICIPATED OR ACTUAL DATES OF THE COMMENCEMENT OF CONSTRUCTION AND THE START-UP OF THE EQUIPMENT

12. IF THIS APPLICATION INCORPORATES BY REFERENCE A PREVIOUSLY GRANTED PERMIT(S), HAS FORM APC-210, "DATA AND INFORMATION—INCORPORATION BY REFERENCE" BEEN COMPLETED.

APPLICATION FOR OPERATING PERMIT ONLY

13. DOES THE STARTUP OF AN EMISSION SOURCE COVERED BY THIS APPLICATION PRODUCE AIR CONTAMINANT EMISSION IN EXCESS OF APPLICABLE STANDARDS:

[ ] YES [X] NO

IF "YES," HAS FORM APC-203, "OPERATION DURING STARTUP" BEEN COMPLETED FOR THIS SOURCE.

[ ] YES [ ] NO

14. DOES THIS APPLICATION REQUEST PERMISSION TO OPREATE AN EMISSION SOURCE DURING MALFUNCTIONS OR BREAKDOWNS:

[ ] YES [X] NO

IF "YES," HAS FORM APC-204, "OPERATION DURING MALFUNCTION AND BREAKDOWN" BEEN COMPLETED FOR THIS SOURCE

[ ] YES [ ] NO

15. IS AN EMISSION SOURCE COVERED BY THIS APPLICATION SUBJECT TO A FUTURE COMPLIANCE DATE:

[ ] YES [X] NO

IF "YES," HAS FORM APC-202, "COMPLIANCE PROGRAM & PROJECT COMPLETION SCHEDULE," BEEN COMPLETED FOR THIS SOURCE:

[ ] YES [ ] NO

16. DOES THE FACILITY COVERED BY THIS APPLICATION REQUIRE AN EPISODE ACTION PLAN (REFER TO GUIDELINES FOR EPISODE ACTION PLANS):

[ ] YES [X] NO

17. LIST AND IDENTIFY ALL FORMS, EXHIBITS, AND OTHER INFORMATION SUBMITTED AS PART OF THIS APPLICATION. INCLUDE THE PAGE NUMBERS OF EACH ITEM (ATTACH ADDITIONAL SHEETS IF NECESSARY):

TOTAL NUMBER OF PAGES _____

ENVIRONMENTAL PROTECTION AGENCY
DIVISION OF AIR POLLUTION CONTROL
2200 CHURCHILL ROAD
SPRINGFIELD, ILLINOIS 62706

of this information is required under that Section. Failure to do so may prevent this form from being processed and could result in your application being denied. This form has been approved by the Forms Management Center.

*DATA AND INFORMATION PROCESS EMISSION SOURCE	

*THIS INFORMATION FORM IS TO BE COMPLETED FOR AN EMISSION SOURCE OTHER THAN A FUEL COMBUSTION EMISSION SOURCE OR AN INCINERATOR. A FUEL COMBUSTION EMISSION SOURCE IS A FURNACE, BOILER, OR SIMILAR EQUIPMENT USED PRIMARILY FOR PRODUCING HEAT OR POWER BY INDIRECT HEAT TRANSFER. AN INCINERATOR IS AN APPARATUS IN WHICH REFUSE IS BURNED.

1. NAME OF PLANT OWNER: Clean Harbors of Chicago, INC.	2. NAME OF CORPORATE DIVISION OR PLANT (IF DIFFERENT FROM OWNER): Clean Harbors of Chicago, INC.
3. STREET ADDRESS OF EMISSION SOURCE: 11800 S. Stony Island Avenue	4. CITY OF EMISSION SOURCE: Chicago

GENERAL INFORMATION

5. NAME OF PROCESS: Compaction of Containers	6. NAME OF EMISSION SOURCE EQUIPMENT: Compactor	
7. EMISSION SOURCE EQUIPMENT MANUFACTURER: Compacting Technologies International	8. MODEL NUMBER: 8560	9. SERIAL NUMBER:
10. FLOW DIAGRAM DESIGNATION(S) OF EMISSION SOURCE: Compactor		
11. IDENTITY(S) OF ANY SIMILAR SOURCE(S) AT THE PLANT OR PREMISES NOT COVERED BY THE FORM (IF THE SOURCE IS COVERED BY ANOTHER APPLICATION, IDENTIFY THE APPLICATION):		
12. AVERAGE OPERATING TIME OF EMISSION SOURCE: 10 HRS/DAY 5 DAYS/WK 50 WKS/YR	13. MAXIMUM OPERATING TIME OF EMISSION SOURCE: 24 HRS/DAY 7 DAYS/WK 52 WKS/YR	
14. PERCENT OF ANNUAL THROUGHPUT: DEC-FEB 25 % MAR-MAY 25 % JUN-AUG 25 % SEPT-NOV 25 %		

INSTRUCTIONS

1. COMPLETE THE ABOVE IDENTIFICATION AND GENERAL INFORMATION SECTION.
2. COMPLETE THE RAW MATERIAL, PRODUCT, WASTE MATERIAL, AND FUEL USAGE SECTIONS FOR THE PARTICULAR SOURCE EQUIPMENT. COMPOSITIONS OF MATERIALS MUST BE SUFFICIENTLY DETAILED TO ALLOW DETERMINATION OF THE NATURE AND QUANTITY OF POTENTIAL EMISSIONS. IN PARTICULAR, THE COMPOSITION OF PAINTS, INKS, ETC., AND ANY SOLVENTS MUST BE FULLY DETAILED.
3. EMISSION AND EXHAUST POINT INFORMATION MUST BE COMPLETED, UNLESS EMISSIONS ARE EXHAUSTED THROUGH AIR POLLUTION CONTROL EQUIPMENT.
4. OPERATING TIME AND CERTAIN OTHER ITEMS REQUIRE BOTH AVERAGE AND MAXIMUM VALUES.
5. FOR GENERAL INFORMATION REFER TO "GENERAL INSTRUCTIONS FOR PERMIT APPLICATIONS," APC-201.

DEFINITIONS

AVERAGE - THE VALUE THAT SUMMARIZES OR REPRESENTS THE GENERAL CONDITION OF THE EMISSION SOURCE, OR THE GENERAL STATE OF PRODUCTION OF THE EMISSION SOURCE. SPECIFICALLY:
- AVERAGE OPERATING TIME - ACTUAL TOTAL HOURS OF OPERATION FOR THE PRECEDING TWELVE MONTH PERIOD.
- AVERAGE RATE - ACTUAL TOTAL QUANTITY OF "MATERIAL" FOR THE PRECEDING TWELVE MONTH PERIOD, DIVIDED BY THE AVERAGE OPERATING TIME.
- AVERAGE OPERATION - OPERATION TYPICAL OF THE PRECEDING TWELVE MONTH PERIOD, AS REPRESENTED BY AVERAGE OPERATING TIME AND AVERAGE RATES.

MAXIMUM - THE GREATEST VALUE ATTAINABLE OR ATTAINED FROM THE EMISSION SOURCE, OR THE PERIOD OF GREATEST OR UTMOST PRODUCTION OF THE EMISSION SOURCE. SPECIFICALLY:
- MAXIMUM OPERATING TIME - GREATEST EXPECTED TOTAL HOURS OF OPERATIONS FOR ANY TWELVE MONTH PERIOD.
- MAXIMUM RATE - GREATEST QUANTITY OF "MATERIAL" EXPECTED PER ANY ONE HOUR OF OPERATION.
- MAXIMUM OPERATION - GREATEST EXPECTED OPERATION, AS REPRESENTED BY MAXIMUM OPERATING TIME AND MAXIMUM RATES.

RAW MATERIAL INFORMATION		
NAME OF RAW MATERIAL	AVERAGE RATE PER IDENTICAL SOURCE	PER
20a.	b. LB/HR	c.
21a.	b. LB/HR	c.
22a.	b. LB/HR	c.
23a.	b. LB/HR	c. LB/H
24a.	b. LB/HR	c. LB/H

PRODUCT INFORMATION		
NAME OF PRODUCT	AVERAGE RATE PER IDENTICAL SOURCE	MAXIMUM RATE PER IDENTICAL SOURCE
30a.	b. LB/HR	c. LB/HR
31a.	b. LB/HR	c. LB/HR
32a.	b. LB/HR	c. LB/HR
33a.	b. LB/HR	c. LB/HR
34a.	b. LB/HR	c. LB/HR

WASTE MATERIAL INFORMATION		
NAME OF WASTE MATERIAL	AVERAGE RATE PER IDENTICAL SOURCE	MAXIMUM RATE PER IDENTICAL SOURCE
40a. EMPTY DRUMS	b. 6,000 LB/HR	c. 24,000 LB/HR
41a. DRUMS CONTAINING WASTE	b. 6,000 LB/HR	c. 24,000 LB/HR
42a. DEBRIS	b. 6,000 LB/HR	c. 24,000 LB/HR
43a.	b. LB/HR	c. LB/HR
44a.	b. LB/HR	c. LB/HR

*FUEL USAGE INFORMATION		
FUEL USED	TYPE	HEAT CONTENT
50a. NATURAL GAS ☐	b. ———	c. 1000 BTU/SCF
OTHER GAS ☐		BTU/SCF
OIL ☐		BTU/GAL
COAL ☐		BTU/LB
OTHER ☐		BTU/LB
d. AVERAGE FIRING RATE PER IDENTICAL SOURCE: BTU/HR	e. MAXIMUM FIRING RATE PER IDENTICAL SOURCE: BTU/HR	

*THIS SECTION IS TO BE COMPLETED FOR ANY FUEL USED DIRECTLY IN THE PROCESS EMISSION SOURCE, E.G. GAS IN A DRYER, OR COAL IN A MELT FURNACE.

*EMISSION INFORMATION

L SOURCES (DESCRIBE AS REQUIRED):
ONE

AVERAGE OPERATION

	CONCENTRATION OR EMISSION RATE PER IDENTICAL SOURCE		METHOD USED TO DETERMINE CONCENTRATION OR EMISSION RATE
	52a. GR/SCF	b. LB/HR	c.
ON NOXIDE	53a. PPM (VOL)	b. LB/HR	c.
NITROGEN OXIDES	54a. PPM (VOL)	b. LB/HR	c.
ORGANIC MATERIAL	55a. PPM (VOL)	b. LB/HR	c.
SULFUR DIOXIDE	56a. PPM (VOL)	b. LB/HR	c.
**OTHER (SPECIFY)	57a. PPM (VOL)	b. LB/HR	c.

MAXIMUM OPERATION

CONTAMINANT	CONCENTRATION OR EMISSION RATE PER IDENTICAL SOURCE		METHOD USED TO DETERMINE CONCENTRATION OR EMISSION RATE
PARTICULATE MATTER	58a. GR/SCF	b. LB/HR	c.
CARBON MONOXIDE	59a. PPM (VOL)	b. LB/HR	c.
NITROGEN OXIDES	60a. PPM (VOL)	b. LB/HR	c.
ORGANIC MATERIAL	61a. PPM (VOL)	b. LB/HR	c.
SULFUR DIOXIDE	62a. PPM (VOL)	b. LB/HR	c.
**OTHER (SPECIFY)	63a. PPM (VOL)	b. LB/HR	c.

*ITEMS 52 THROUGH 63 NEED NOT BE COMPLETED IF EMISSIONS ARE EXHAUSTED THROUGH AIR POLLUTION CONTROL EQUIPMENT.
***"OTHER" CONTAMINANT SHOULD BE USED FOR AN AIR CONTAMINANT NOT SPECIFICALLY NAMED ABOVE. POSSIBLE OTHER CONTAMINANTS ARE ASBESTOS, BERYLLIUM, MERCURY, VINYL CHLORIDE, LEAD, ETC.

***EXHAUST POINT INFORMATION

64. FLOW DIAGRAM DESIGNATION(S) OF EXHAUST POINT:
COMPACTOR

65. DESCRIPTION OF EXHAUST POINT (LOCATION IN RELATION TO BUILDINGS, DIRECTION, HOODING, ETC.):

66. EXIT HEIGHT ABOVE GRADE:	67. EXIT DIAMETER:
68. GREATEST HEIGHT OF NEARBY BUILDINGS: FT	69. EXIT DISTANCE FROM NEAREST PLANT BOUNDARY: FT
AVERAGE OPERATION	MAXIMUM OPERATION
70. EXIT GAS TEMPERATURE: °F	72. EXIT GAS TEMPERATURE: °F
71. GAS FLOW RATE THROUGH EACH EXIT: ACFM	73. GAS FLOW RATE THROUGH EACH EACH EXIT: ACFM

***THIS SECTION SHOULD NOT BE COMPLETED IF EMISSIONS ARE EXHAUSTED THROUGH AIR POLLUTION CONTROL EQUIPMENT.

STATE OF ILLINOIS
ENVIRONMENTAL PROTECTION AGENCY
DIVISION OF AIR POLLUTION CONTROL
2200 CHURCHILL ROAD
SPRINGFIELD, ILLINOIS 62706

This agency is authorized to require this information under Illinois Revised Statutes, 1979, Chapter 111½, Section 1039. Disclosure of this information is required under that section. Failure to do so may prevent this form from being processed and could result in your application being denied. This form has been approved by the Forms Management Center

*DATA AND INFORMATION

AIR POLLUTION CONTROL EQUIPMENT

*THIS INFORMATION FORM IS FOR AN INDIVIDUAL UNIT OF AIR POLLUTION CONTROL EQUIPMENT OR AN AIR POLLUTION CONTROL SYSTEM.

1. NAME OF OWNER: **CLEAN HARBORS OF CHICAGO, INC.**	2. NAME OF CORPORATE DIVISION OR PLANT (IF DIFFERENT FROM OWNER):
3. STREET ADDRESS OF CONTROL EQUIPMENT: **11800 S. Stony Island Avenue**	4. CITY OF CONTROL EQUIPMENT: **CHICAGO**
5. NAME OF CONTROL EQUIPMENT OR CONTROL SYSTEM: **CARBON ADSORPTION SYSTEM (FOR COMPACTOR)**	

INSTRUCTIONS

1. COMPLETE THE ABOVE IDENTIFICATION.
2. COMPLETE THE APPROPRIATE SECTION FOR THE UNIT OF CONTROL EQUIPMENT, OR THE APPROPRIATE SECTIONS FOR THE CONTROL SYSTEM. BE CERTAIN THAT THE ARRANGEMENT OF VARIOUS UNITS IN A CONTROL SYSTEM IS MADE CLEAR IN THE PROCESS FLOW DIAGRAM.
3. COMPLETE PAGE 6 OF THIS FORM, EMISSION INFORMATION AND EXHAUST POINT INFORMATION.
4. EFFICIENCY VALUES SHOULD BE SUPPORTED WITH A DETAILED EXPLANATION OF THE METHOD OF CALCULATION, THE MANNER OF ESTIMATION, OR THE SOURCE OF INFORMATION. REFERENCE TO THIS FORM ANY RELEVANT INFORMATION OR EXPLANATION INCLUDED IN THIS PERMIT APPLICATION.
5. EFFICIENCY VALUES AND CERTAIN OTHER ITEMS OF INFORMATION ARE TO BE GIVEN FOR AVERAGE AND MAXIMUM OPERATION OF THE SOURCE EQUIPMENT. FOR EXAMPLE, "MAXIMUM EFFICIENCY" IS THE EFFICIENCY OF THE CONTROL EQUIPMENT WHEN THE SOURCE IS AT MAXIMUM OPERATION, AND "AVERAGE FLOW RATE" IS THE FLOW RATE INTO THE CONTROL EQUIPMENT WHEN THE SOURCE IS AT AVERAGE OPERATION.
6. FOR GENERAL INFORMATION REFER TO "GENERAL INSTRUCTIONS FOR PERMIT APPLICATIONS", APC-201.

DEFINITIONS

AVERAGE - THE VALUE THAT SUMMARIZES OR REPRESENTS THE GENERAL CONDITION OF THE EMISSION SOURCE OR THE GENERAL STATE OF PRODUCTION OF THE EMISSION SOURCE. SPECIFICALLY:
AVERAGE OPERATION - OPERATION TYPICAL OF THE PRECEDING TWELVE MONTH PERIOD, AS REPRESENTED BY AVERAGE OPERATING TIME AND AVERAGE RATES.

MAXIMUM - THE GREATEST VALUE ATTAINABLE OR ATTAINED FROM THE EMISSION SOURCE, OR THE PERIOD OF GREATEST OR UTMOST PRODUCTION OF THE EMISSION SOURCE. SPECIFICALLY:
MAXIMUM OPERATION - THE GREATEST EXPECTED OPERATION, AS REPRESENTED BY MAXIMUM OPERATING TIME AND MAXIMUM RATES.

DESIGNATION(S) OF
URER:
OF CYCLONE: ☐ MULTIPLE
IMPLE
DIMENSION THE APPR

ADSORPTION UNIT

1. FLOW DIAGRAM DESIGNATION(S) OF ADSORPTION UNIT:
   CARBON ADSORPTION

2. MANUFACTURER: CARB TROL

3. MODEL NAME AND NUMBER: 61B75

4. ADSORBENT:
   ☒ ACTIVATED CHARCOAL: TYPE _____ ☐ OTHER: SPECIFY _____

5. ADSORBATE(S):
   VOLATILE ORGANIC COMPOUNDS

6. NUMBER OF BEDS PER UNIT: ONE

7. WEIGHT OF ADSORBENT PER BED: 200 L

8. DIMENSIONS OF BED:
   THICKNESS 43 IN, SURFACE AREA 1032 SQUARE IN

9. INLET GAS TEMPERATURE: AMBIENT °F

10. PRESSURE DROP ACROSS UNIT: INCH H_2O GA

11. TYPE OF REGENERATION:
    ☒ REPLACEMENT ☐ STEAM ☐ OTHER: SPECIFY _____

12. METHOD OF REGENERATION:
    ☐ ALTERNATE USE OF _____ ENTIRE UNITS ☐ ALTERNATE USE OF _____ BEDS IN A SINGLE UNIT
    ☐ SOURCE SHUT DOWN ☐ OTHER: DESCRIBE

AVERAGE OPERATION OF SOURCE	MAXIMUM OPERATION OF SOURCE
13. TIME ON LINE BEFORE REGENERATION: * MIN/BED	15. TIME ON LINE BEFORE REGENERATION: * MIN/
14. EFFICIENCY OF ADSORBER (SEE INSTRUCTION 4): See Summary of Carbon Adsorption %	16. EFFICIENCY OF ADSORBER (SEE INSTRUCTION 4): Capacities

*** DEPENDENT ON USE OF SYSTEM. SYSTEM WILL BE CHECKED FOR VOC'S**

AFTERBURNER

1. FLOW DIAGRAM DESIGNATION(S) OF AFTERBURNER:

2. MANUFACTURER:

3. MODEL NAME AND NUMBER:

4. COMBUSTION CHAMBER DIMENSIONS:
   LENGTH _____ IN, CROSS-SECTIONAL AREA _____ SQUARE IN.

5. INLET GAS TEMPERATURE: °F

6. OPERATING TEMPERATURE OF COMBUSTION CHAMBER: °F

7. FUEL:
   ☐ GAS ☐ OIL: SULFUR _____ WT%

8. BURNERS PER AFTERBURNER:
   @ BTU/HR EACH

9. CATALYST USED:
   ☐ NO ☐ YES: DESCRIBE CATALYST _____

10. HEAT EXCHANGER USED:
    ☐ NO ☐ YES: DESCRIBE HEAT EXCHANGER _____

AVERAGE OPERATION OF SOURCE	MAXIMUM OPERATION OF SOURCE
11. GAS FLOW RATE: SCFM	13. GAS FLOW RATE: SCFM
12. EFFICIENCY OF AFTERBURNER (SEE INSTRUCTION 4): %	14. EFFICIENCY OF AFTERBURNER (SEE INSTRUCTION 4): %

CYCLONE

DESIGNATION(S) OF CYCLONE:

TURER:	3. MODEL:
OF CYCLONE: ☐ SIMPLE ☐ MULTIPLE	5. NUMBER OF CYCLONES IN EACH MULTIPLE CYCLONE:

DIMENSION THE APPROPRIATE SKETCH (IN INCHES) OR PROVIDE A DRAWING WITH EQUIVALENT INFORMATION:

TANGENTIAL INLET CYCLONE

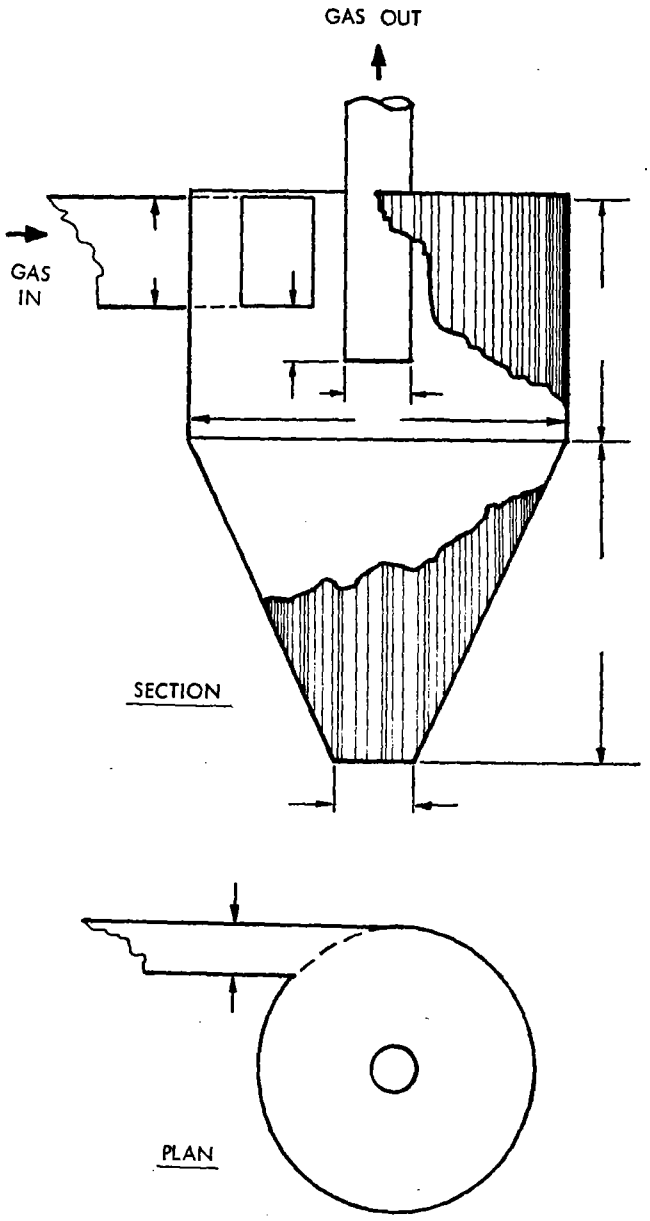

AXIAL INLET CYCLONE
(INDIVIDUAL CYCLONE OF MULTIPLE CYCLONE)

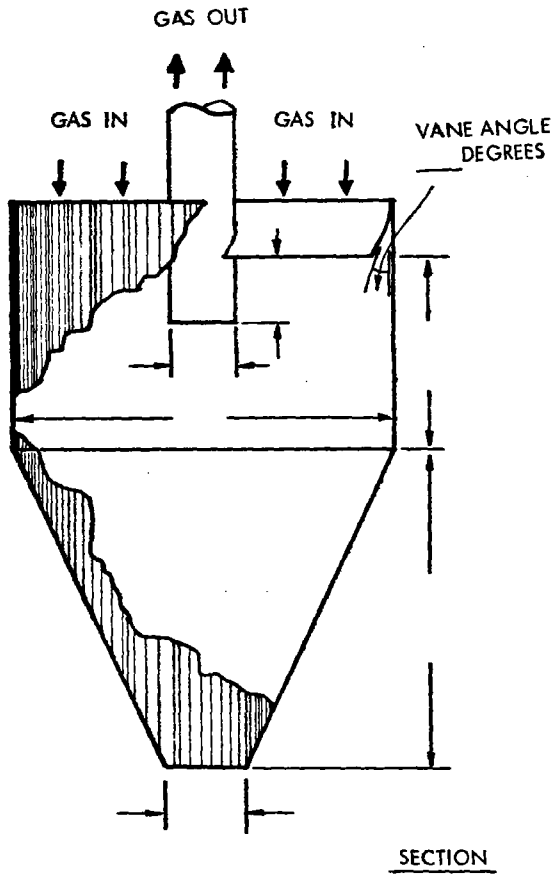

NOT TO SCALE

AVERAGE OPERATION OF SOURCE	MAXIMUM OPERATION OF SOURCE
7. GAS FLOW RATE: SCFM	9. GAS FLOW RATE: SCFM
8. EFFICIENCY OF CYCLONE (SEE INSTRUCTION 4): %	10. EFFICIENCY OF CYCLONE (SEE INSTRUCTION 4): %

CONDENSER

1. FLOW DIAGRAM DESIGNATION(S) OF CONDENSER:

2. MANUFACTURER:

3. MODEL NAME AND NUMBER:

4. HEAT EXCHANGE

AVERAGE OPERATION OF SOURCE	MAXIMUM OPERATION OF SOURCE
5. COOLANT FLOW RATE PER CONDENSER: WATER _____ GPM AIR _____ SCFM OTHER: TYPE _____, FLOW RATE _____	10. COOLANT FLOW RATE PER CONDENSER: WATER _____ GPM AIR _____ OTHER: TYPE _____, FLOW RATE _____
6. GAS FLOW RATE: SCFM	11. GAS FLOW RATE: S
7. COOLANT TEMPERATURE: INLET ____ °F OUTLET ____ °F 8. GAS TEMPERATURE: INLET ____ °F OUTLET ____ °F	12. COOLANT TEMPERATURE: INLET ____ °F OUTLET ____ °F 13. GAS TEMPERATURE: INLET ____ °F OUTLET
9. EFFICIENCY OF CONDENSER (SEE INSTRUCTION 4): %	14. EFFICIENCY OF CONDENSER (SEE INSTRUCTION 4):

*ELECTRICAL PRECIPITATOR

1. FLOW DIAGRAM DESIGNATION OF ELECTRICAL PRECIPITATOR:

2. MANUFACTURER:

3. MODEL NAME AND NUMBER:

4. COLLECTING ELECTRODE AREA PER CONTROL DEVICE:

AVERAGE OPERATION OF SOURCE	MAXIMUM OPERATION OF SOURCE
5. GAS FLOW RATE: SCFM	7. GAS FLOW RATE:
6. EFFICIENCY OF ELECTRICAL PRECIPITATOR (SEE INSTRUCTION 4): %	8. EFFICIENCY OF ELECTRICAL PRECIPITATOR (SEE INSTRUCTION

SUBMIT THE MANUFACTURER'S SPECIFICATIONS FOR THE ELECTRICAL PRECIPITATOR. REFERENCE THE INFORMATION TO THIS FORM.

*ELECTRICAL PRECIPITATORS VARY GREATLY IN THEIR DESIGN AND IN THEIR COMPLEXITY. THE ITEMS IN THIS SECTION PROVIDE A MINIMU AMOUNT OF INFORMATION. THE APPLICANT MUST, HOWEVER, SUBMIT WITH THIS APPLICATION THE MANUFACTURER'S SPECIFICATIONS, INCLUDING ANY DRAWINGS, TECHNICAL DOCUMENTS, ETC. IF THE INFORMATION PROVIDED BY THE MANUFACTURER'S SPECIFICATIONS IS INSUFFICIENT FOR FULL AND ACCURATE ANALYSIS, THE AGENCY WILL REQUEST SPECIFIC ADDITIONAL INFORMATION.

FILTER UNIT

1. FLOW DIAGRAM DESIGNATION(S) OF FILTER UNIT:

2. MANUFACTURER:

3. MODEL NAME AND NUMBER:

4. FILTERING MATERIAL:

5. FILTERING AREA:

6. CLEANING METHOD:
☐ SHAKER ☐ REVERSE AIR ☐ PULSE AIR ☐ PULSE JET ☐ OTHER: SPECIFY _____

7. GAS COOLING METHOD: ☐ DUCTWORK: LENGTH _____ FT., DIAM _____ IN.
☐ BLEED-IN AIR ☐ WATER SPRAY ☐ OTHER: SPECIFY

AVERAGE OPERATION OF SOURCE	MAXIMUM OPERATION OF SOURCE
8. GAS FLOW RATE (FROM SOURCE): SCFM	12. GAS FLOW RATE (FROM SOURCE): SC
9. GAS COOLING FLOW RATE: BLEED-IN AIR _____ SCFM, WATER SPRAY _____ GPM	13. GAS COOLING FLOW RATE: BLEED-IN AIR _____ SCFM, WATER SPRAY _____
10. INLET GAS CONDITION: TEMPERATURE _____ °F DEWPOINT _____ °F	14. INLET GAS CONDITION: TEMPERATURE _____ °F DEWPOINT _____
11. EFFICIENCY OF FILTER UNIT (SEE INSTRUCTION 4): %	15. EFFICIENCY OF FILTER UNIT (SEE INSTRUCTION 4):

SCRUBBER

1. FLOW DIAGRAM DESIGNATION(S) OF SCRUBBER:

2. MANUFACTURER:

3. MODEL NAME AND NUMBER:

4. TYPE OF SCRUBBER:

☐ WET ENERGY: GAS STREAM PRESSURE DROP _____ INCH H_2O

☐ PACKED: PACKING TYPE _____, PACKING SIZE _____, PACKED HEIGHT _____ IN.

☐ SPRAY: NUMBER OF NOZZLES _____, NOZZLE PRESSURE _____ PSIG

☐ OTHER: SPECIFY _____ ATTACH DESCRIPTION AND SKETCH WITH DIMENSIONS

5. TYPE OF FLOW:

☐ COCURRENT ☐ COUNTERCURRENT ☐ CROSSFLOW

6. SCRUBBER GEOMETRY:

LENGTH IN DIRECTION OF GAS FLOW _____ IN., CROSS-SECTIONAL AREA _____ SQUARE IN.

7. CHEMICAL COMPOSITION OF SCRUBBANT:

AVERAGE OPERATION OF SOURCE	MAXIMUM OPERATION OF SOURCE
8. SCRUBBANT FLOW RATE: GPM	12. SCRUBBANT FLOW RATE: GPM
9. GAS FLOW RATE: SCFM	13. GAS FLOW RATE: SCFM
10. INLET GAS TEMPERATURE: °F	14. INLET GAS TEMPERATURE: °F
11. EFFICIENCY OF SCRUBBER (SEE INSTRUCTION 4): _____ % PARTICULATE _____ % GASEOUS	15. EFFICIENCY OF SCRUBBER (SEE INSTRUCTION 4): _____ % PARTICULATE _____ % GASEOUS

OTHER TYPE OF CONTROL EQUIPMENT

1. FLOW DIAGRAM DESIGNATION(S) OF "OTHER TYPE" OF CONTROL EQUIPMENT:

2. GENERIC NAME OF "OTHER" EQUIPMENT:

3. MANUFACTURER:

4. MODEL NAME AND NUMBER:

5. DESCRIPTION AND SKETCH, WITH DIMENSIONS AND FLOW RATES, OF "OTHER" EQUIPMENT:

AVERAGE OPERATION OF SOURCE	MAXIMUM OPERATION OF SOURCE
6. FLOW RATES: _____ GPM _____ SCFM	8. FLOW RATES: GPM _____ SCFM
7. EFFICIENCY OF "OTHER" EQUIPMENT (SEE INSTRUCTION 4): %	9. EFFICIENCY OF "OTHER" EQUIPMENT (SEE INSTRUCTION 4): %

EMISSION INFORMATION

1. NUMBER OF IDENTICAL CONTROL UNITS OR CONTROL SYSTEMS (DESCRIBE AS REQUIRED):

AVERAGE OPERATION OF SOURCE

CONTAMINANT	CONCENTRATION OR EMISSION RATE PER IDENTICAL CONTROL UNIT OR CONTROL SYSTEM		METHOD USED TO DETERMINE CONCEN. OR EMISSION RATE
PARTICULATE MATTER	2a. GR/SCF	b. LB/HR	c.
CARBON MONOXIDE	3a. PPM (VOL)	b. LB/HR	c.
NITROGEN OXIDES	4a. PPM (VOL)	b. LB/HR	c.
ORGANIC MATERIAL	5a. * PPM (VOL)	b. LB/HR	c. SUMMARY OF CARBON ADSORPTION
SULFUR DIOXIDE	6a. PPM (VOL)	b. LB/HR	c.
OTHER (SPECIFY)	7a. PPM (VOL)	b. LB/HR	c.

MAXIMUM OPERATION OF SOURCE

CONTAMINANT	CONCENTRATION OR EMISSION RATE PER IDENTICAL CONTROL UNIT OR CONTROL SYSTEM		METHOD USED TO DETERMINE CONCENTRATION OR EMISSION RATE
PARTICULATE MATTER	8a. GR/SCF	b. LB/HR	c.
CARBON MONOXIDE	9a. PPM (VOL)	b. LB/HR	c.
NITROGEN OXIDES	10a. PPM (VOL)	b. LB/HR	c.
ORGANIC MATERIAL	11a. * PPM (VOL)	b. LB/HR	c. SUMMARY OF CARBON ADSORPTION
SULFUR DIOXIDE	12a. PPM (VOL)	b. LB/HR	c.
OTHER (SPECIFY)	13a. PPM (VOL)	b. LB/HR	c.

**"OTHER" CONTAMINANT SHOULD BE USED FOR AN AIR CONTAMINANT NOT SPECIFICALLY NAMED ABOVE. POSSIBLE OTHER CONTAMINANT ARE ASBESTOS, BERYLLIUM, MERCURY, VINYL CHLORIDE, LEAD, ETC.

***DEPENDING ON ORGANIC MATERIAL (SEE SUMMARY OF CARBON ADSORPTION CAPACITIES) AVERAGE REMOVAL > 97%**

EXHAUST POINT INFORMATION

1. FLOW DIAGRAM DESIGNATION(S) OF EXHAUST POINT: **EXAUST POINT**

2. DESCRIPTION OF EXHAUST POINT (LOCATION IN RELATION TO BUILDINGS, DIRECTION, HOODING, ETC.): **OUTSIDE CONTAINER STORAGE AREA**

3. EXIT HEIGHT ABOVE GRADE: **4Ft.**

4. EXIT DIAMETER: **2½ inches**

5. GREASTEST HEIGHT OF NEARBY BUILDINGS: **25** FT

6. EXIT DISTANCE FROM NEAREST PLANT BOUNDARY: **100** F

AVERAGE OPERATION OF SOURCE	MAXIMUM OPERATION OF SOURCE
7. EXIT GAS TEMPERATURE: **AMBIENT** °F	9. EXIT GAS TEMPERATURE: **AMBIENT** C
8. GAS FLOW RATE THROUGH EACH EXIT: **<75** ACFM	10. GAS FLOW RATE THROUGH EACH EXIT: **<75** ACFM

PROCESS FLOW DIAGRAM

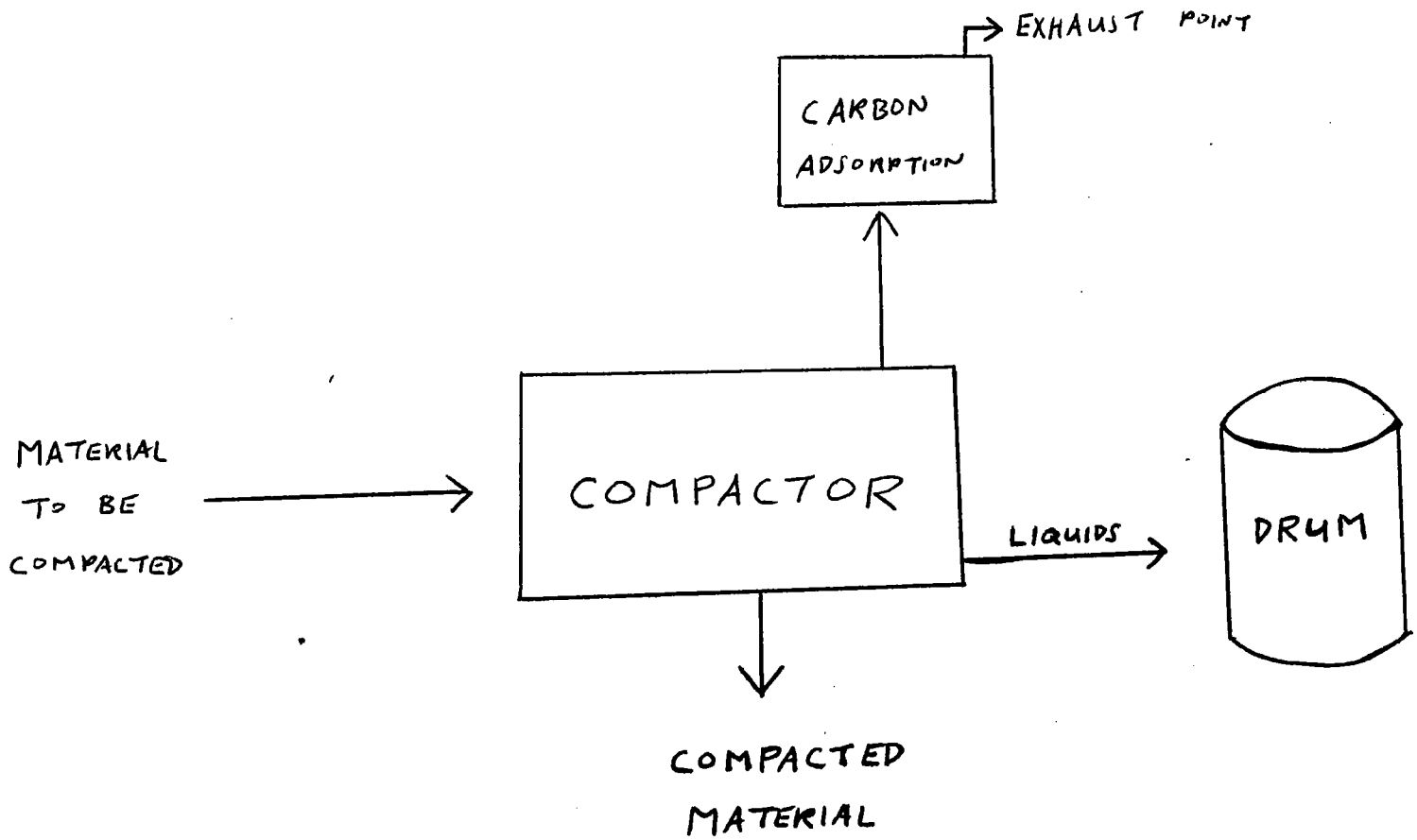

COMPACTOR

CTI "PRO"
STE PACKAGING SYSTEM

HOW IT WORKS:

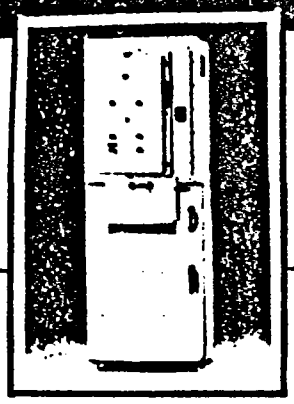

1 The CTI "PRO" is safe and simple to operate. The fully enclosed, microprocessor controlled system provides the industry's best volume reduction ratios.

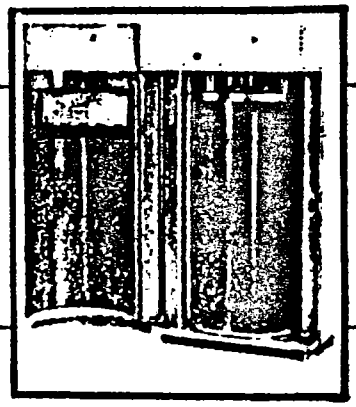

2 The patented barrel containment chamber completely surrounds and supports the barrel (top, bottom and sides), preventing any distortion.

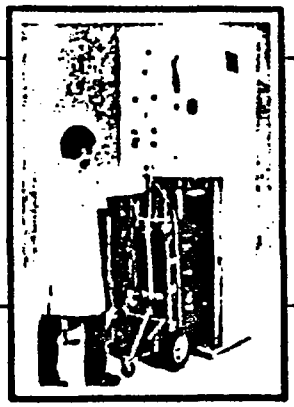

3 The CTI "PRO" allows compaction into steel, fibre or poly/plastic barrels (5 gallon to 85 gallon).

4 The exclusive "Quick Chute," allows waste loadin without opening the chamb door.

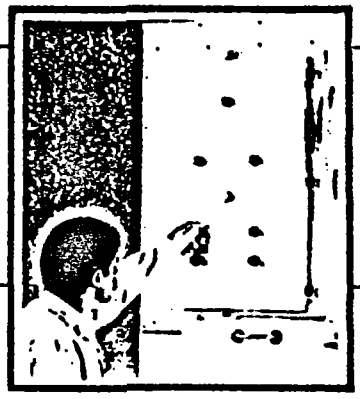

5 Simple one touch operation starts the compaction cycle, while system indicator lights show the status of other machine functions. Quality design and engineering ensures operator safety at all times.

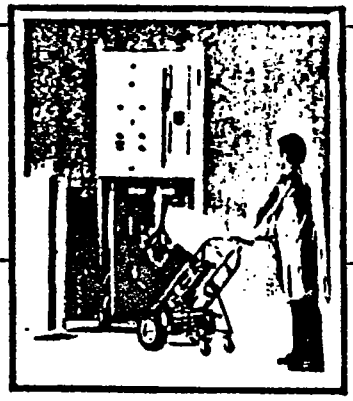

6 Barrel loading and removal is made safe and easy with the "Safety Hand Truck." The unique braking system and 1,000 lb. capacity enable it to handle virtually any load.

COMPACTION TECHNOLOGIES INC.

2417 N.W. Thurman, Portland, OR U.S.A. 97210
1-800-727-2067 (503) 228-0719 FAX (503) 228-0873

PACTOR

Disposal Costs

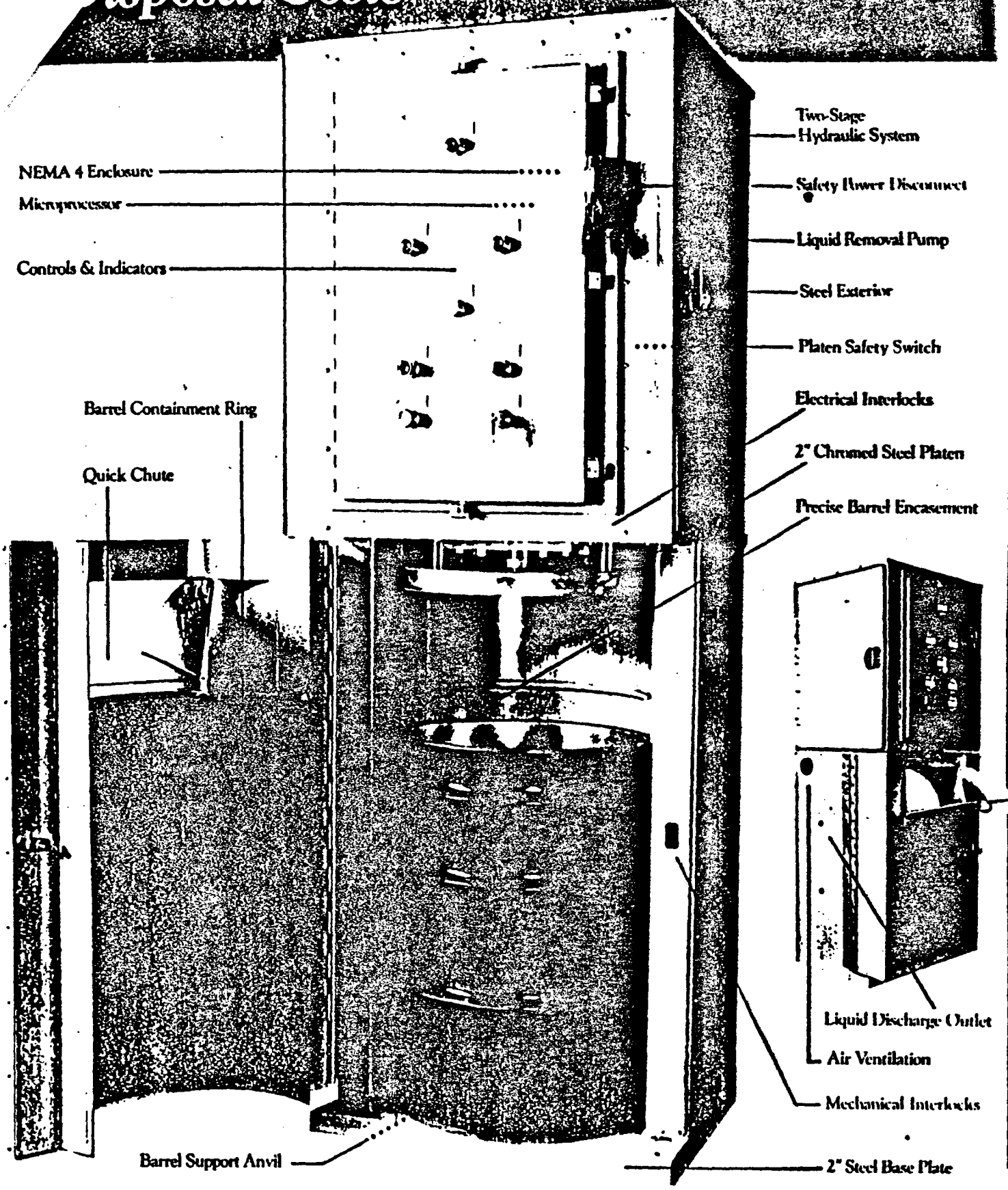

SPECIFICATIONS

(Based on the CTI "PRO"—8500 Series)

Height: 96"
Width: 34"
Depth: 34"
Weight: 2,800 lbs. (approx.)
Capacity: 55 gallon barrel
Compaction Force: Up to 85,000 lbs.

Electric Motor: 2.0 hp (TEFC)
Electrical Service: Voltage available for most types of service.
Normal Operating Sound Level: 55 dbs.
Hydraulic Fluid: 10 gallons
Warranty: 1 year limited

APPLICATIONS

- Industrial Processing Plants
- Energy Production Facilities
- Hospitals and Clinics
- Government Applications
- High-Tech and Electronics
- Treatment Storage and Disposal Facilities (TSDF)
- Recycling and Maritime Operations
- Research and Development Facilities

COMPACTION RATIOS

Uncompacted Waste (barrels): CTI "PRO" 8500 compacted waste (barrel)

WASTE TYPE	COMPACTION RATIO RANGES
Absorbent Socks/Pillows	3:1 - 6:1
Oil Filters, cartridge type	3:1 - 8:1
Paint Booth Air Filters	4:1 - 10:1
Glass Laboratory Vials	5:1 - 12:1
Shop Rags, cloth	6:1 - 14:1
Lab Garments, booties/gloves/plastics/etc.	6:1 - 14:1
Metal Buckets, 5 gal.	5:1 - 14:1
Aluminum Containers	8:1 - 20:1
Wiping Towels, paper	20:1 - 25:1

Data collected from CTI manufacturing facility and field results of current users. All ratios are approximate.

COMPACTING TECHNOLOGIES INTERNATIONAL

TOP VIEW- DOOR OPEN

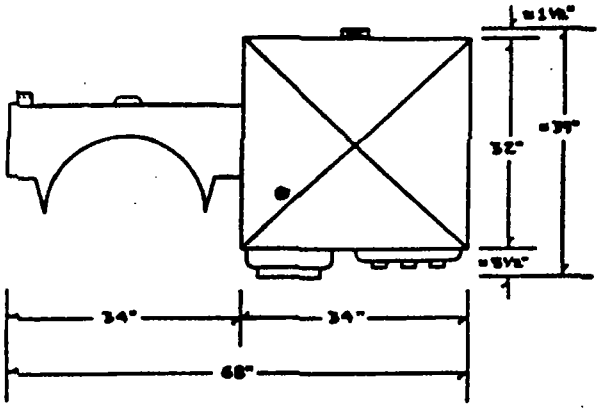

COMPACTOR ELECTRICAL CONTROLS, INDICATORS

REF. ID	DESCRIPTION	
A	CONTROL PWR "OFF-ON"	2 POS. KEY SWITCH
B	AUTO STOP	MUSHROOM HEAD PUSH BUTTON
C	CONTROL PWR INDICATOR	RED LIGHT
D	AUTO START	ILLUMINATED PUSH BUTTON
E	DOOR CLOSED INDICATOR	WHITE LIGHT
F	RAM UP INDICATOR	BLUE LIGHT
G	RAM DOWN INDICATOR	BLUE LIGHT
H	BARREL FULL INDICATOR	FLASHING AMBER LIGHT
I	RAM "UP-DOWN"	3 POS. SELECTOR SWITCH
J	MAIN CIRCUIT BREAKER	LEVER HANDLE "ON-OFF/RESET"
K	DOOR SENSOR (LS-5)	PROXIMITY SWITCH
L	CYCLE "WET-DRY"	2 POS. SELECTOR SWITCH △1
M	SUCTION PUMP TEST	PUSH BUTTON-BLUE △1
N	HYD. MOTOR STARTER RESET	PUSH BUTTON

FRONT VIEW-DOOR OPEN

LEFT SIDE VIEW- DOOR CLOSED

BACK VIEW-DOOR CLOSED

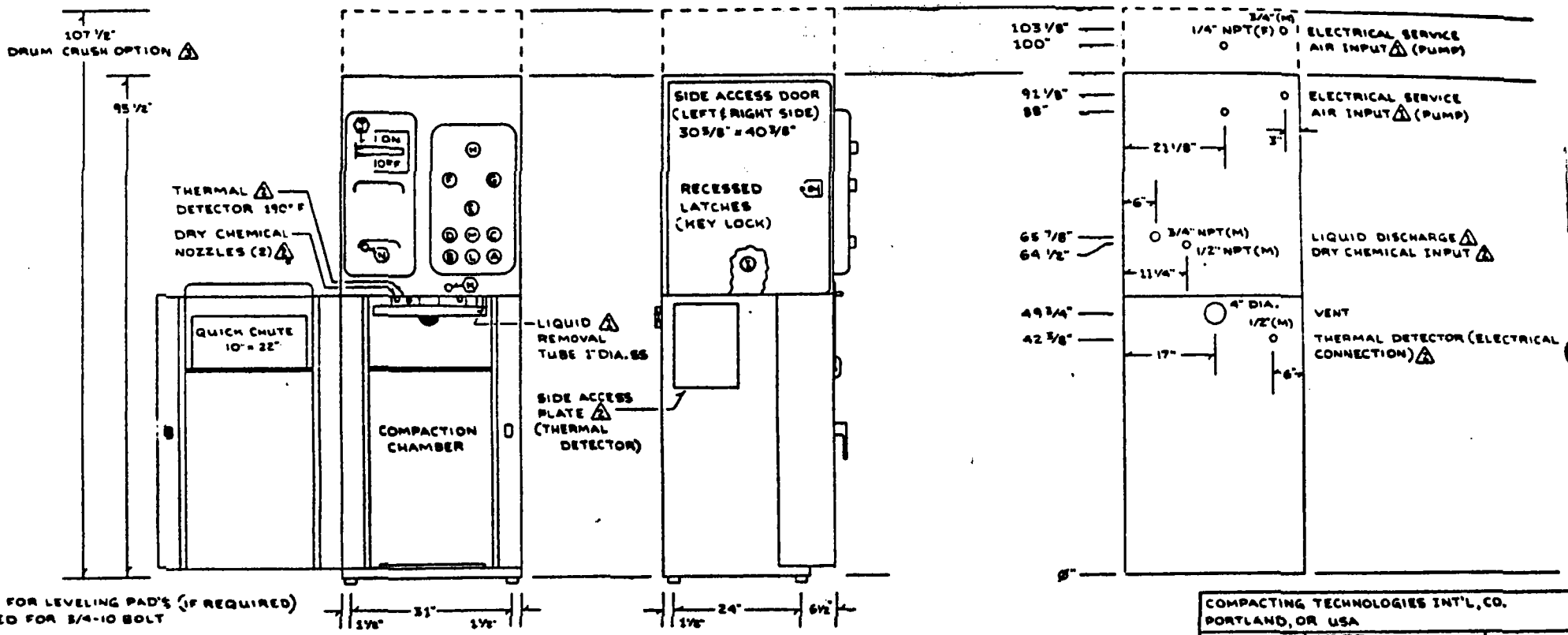

DIM'S FOR LEVELING PAD'S (IF REQUIRED) TAPPED FOR 3/4-10 BOLT

OPTIONS: △1 LIQUID REMOVAL SYSTEM
△2 FIRE EXTINGUISHER SYSTEM CONNECTION
△3 DRUM CRUSH
△4 HEPA FILTER (NOT SHOWN)

COMPACTING TECHNOLOGIES INTERNATIONAL

COMPACTING TECHNOLOGIES INT'L, CO. PORTLAND, OR USA		
SCALE NONE	APPROVED BY:	DRAWN BY H.S.
DATE 7-17-90		REVISED
CTI PRO COMPACTOR - ELECTRICAL CONTROL & COMPONENT ILLUSTRATION		
NEMA 7 PRO SERIES		DRAWING NUMBER CTI-1782

CARBTROL

Air Purification Systems

75 to 450 CFM

1000 CFM

FEATURES

- Activated carbon adsorber and blower combined in factory-assembled package.
- Supplied complete. Only requirement is power connection.
- Provided in the following capacities 75, 125, 300, 450, 1000 and 2000 CFM.
- Blower on discharge side of adsorber. Vacuum operation eliminates VOC leaks.
- Regeneration of spent carbon available. Canisters have D.O.T. rating for transport.
- Systems up to 450 CFM maintained in stock to meet emergency needs

COMPONENTS

- 75 to 450 CFM units have blowers mounted on canister.
- 1000 & 2000 CFM units have blower on separate pallet.
- Interconnecting piping and 8 feet of flexible suction hose included.
- Pallets have fork lift fittings.
- Blowers are centrifugal type, direct drive of aluminum, spark-proof construction.
- TEFC motors standard. Explosion-proof available.
- Adsorber units can be supplied in mild steel epoxy lined, or HDPE. Piping is PVC.

APPLICATIONS

- Solvent Emissions
- Drum Filling Operations
- Spray Booths
- Laboratory Hoods
- Sumps and Sewerage Wet Wells

CARBTROL®
CORPORATION

39 Riverside Avenue, Westport, CT 06880 • 1-800-242-1150 • (203) 226-5642

©COPYRIGHT 1991 CARBTROL CORPORATION—C

TABLE 3. SUMMARY OF CARBON ADSORPTION CAPACITIES

Compound	Adsorption[a] Capacity, mg/g
bis(2-Ethylhexyl) phthalate	11,300
Butylbenzyl phthalate	1,520
Heptachlor	1,220
Heptachlor epoxide	1,038
Endosulfan sulfate	686
Endrin	666
Fluoranthene	664
Aldrin	651
PCB-1232	630
beta-Endosulfan	615
Dieldrin	606
Hexachlorobenzene	450
Anthracene	376
4-Nitrobiphenyl	370
Fluorene	330
DDT	322
2-Acetylaminofluorene	318
alpha-BHC	303
Anethole*	300
3,3-Dichlorobenzidine	300
2-Chloronaphthalene	280
Phenylmercuric Acetate	270
Hexachlorobutadiene	258
gamma-BHC (lindane)	256
p-Nonylphenol	250
4-Dimethylaminoazobenzene	249
Chlordane	245
PCB-1221	242
DDE	232
Acridine yellow*	230
Benzidine dihydrochloride	220
beta-BHC	220
N-Butylphthalate	220
N-Nitrosodiphenylamine	220
Phenanthrene	215
Dimethylphenylcarbinol*	210
4-Aminobiphenyl	200
beta-Naphthol*	200
alpha-Endosulfan	194
Acenaphthene	190
4,4' Methylene-bis-(2-chloroaniline)	190
Benzo(k)fluoranthene	181
Acridine orange*	180
alpha-Naphthol	180
4,6-Dinitro-o-cresol	169
alpha-Naphthylamine	160
2,4-Dichlorophenol	157
1,2,4-Trichlorobenzene	157
2,4,6-Trichlorophenol	155
beta-Naphthylamine	150
Pentachlorophenol	150
2,4-Dinitrotoluene	146
2,6-Dinitrotoluene	145
4-Bromophenyl phenyl ether	144
p-Nitroaniline*	140
1,1-Diphenylhydrazine	135
Naphthalene	132
1-Chloro-2-nitrobenzene	130
1,2-Dichlorobenzene	129
p-Chlorometacresol	124
1,4-Dichlorobenzene	121
Benzothiazole*	120
Diphenylamine	120
Guanine*	120
Styrene	120
1,3-Dichlorobenzene	118
Acenaphthylene	115
4-Chlorophenyl phenyl ether	111
Diethyl phthalate	110

TABLE 3. SUMMARY OF CARBON ADSORPTION CAPACITIES (cont.)

Compound	Adsorption[a] Capacity, mg/g
2-Nitrophenol	99
Dimethyl phthalate	97
Hexachloroethane	97
Chlorobenzene	91
p-Xylene	85
2,4-Dimethylphenol	78
4-Nitrophenol	76
Acetophenone	74
1,2,3,4-Tetrahydro-naphthalene	74
Adenine*	71
Dibenzo(a,h)anthracene	69
Nitrobenzene	68
3,4-Benzofluoranthene	57
1,2-Dibromo-3-chloro-propane	53
Ethylbenzene	53
2-Chlorophenol	51
Tetrachloroethene	51
o-Anisidine*	50
5 Bromouracil	44
Benzo(a)pyrene	34
2,4-Dinitrophenol	33
Isophorone	32
Trichloroethene	28
Thymine*	27
Toluene	26
5-Chlorouracil*	25
N-Nitrosodi-n-propylamine	24
bis(2-Chloroisopropyl) ether	24
Phenol	21

Compound	Adsorption[a] Capacity, mg/g
Bromoform	20
Carbon tetrachloride	11
bis(2-Chloroethoxy) methane	11
Uracil*	11
Benzo(ghi)perylene	11
1,1,2,2-Tetrachloroethane	11
1,2-Dichloropropene	8.2
Dichlorobromomethane	7.9
Cyclohexanone*	6.2
1,2-Dichloropropane	5.9
1,1,2-Trichloroethane	5.8
Trichlorofluoromethane	5.6
5-Fluorouracil*	5.5
1,1-Dichloroethylene	4.9
Dibromochloromethane	4.8
2-Chloroethyl vinyl ether	3.9
1,2-Dichloroethane	3.6
1,2-trans-Dichloroethene	3.1
Chloroform	2.6
1,1,1-Trichloroethane	2.5
1,1-Dichloroethane	1.8
Acrylonitrile	1.4
Methylene chloride	1.3
Acrolein	1.2
Cytosine*	1.1
Benzene	1.0
Ethylenediaminetetra-acetic acid	0.86
Benzoic acid	0.76
Chloroethane	0.59
N-Dimethylnitros-amine	6.8×10^{-5}

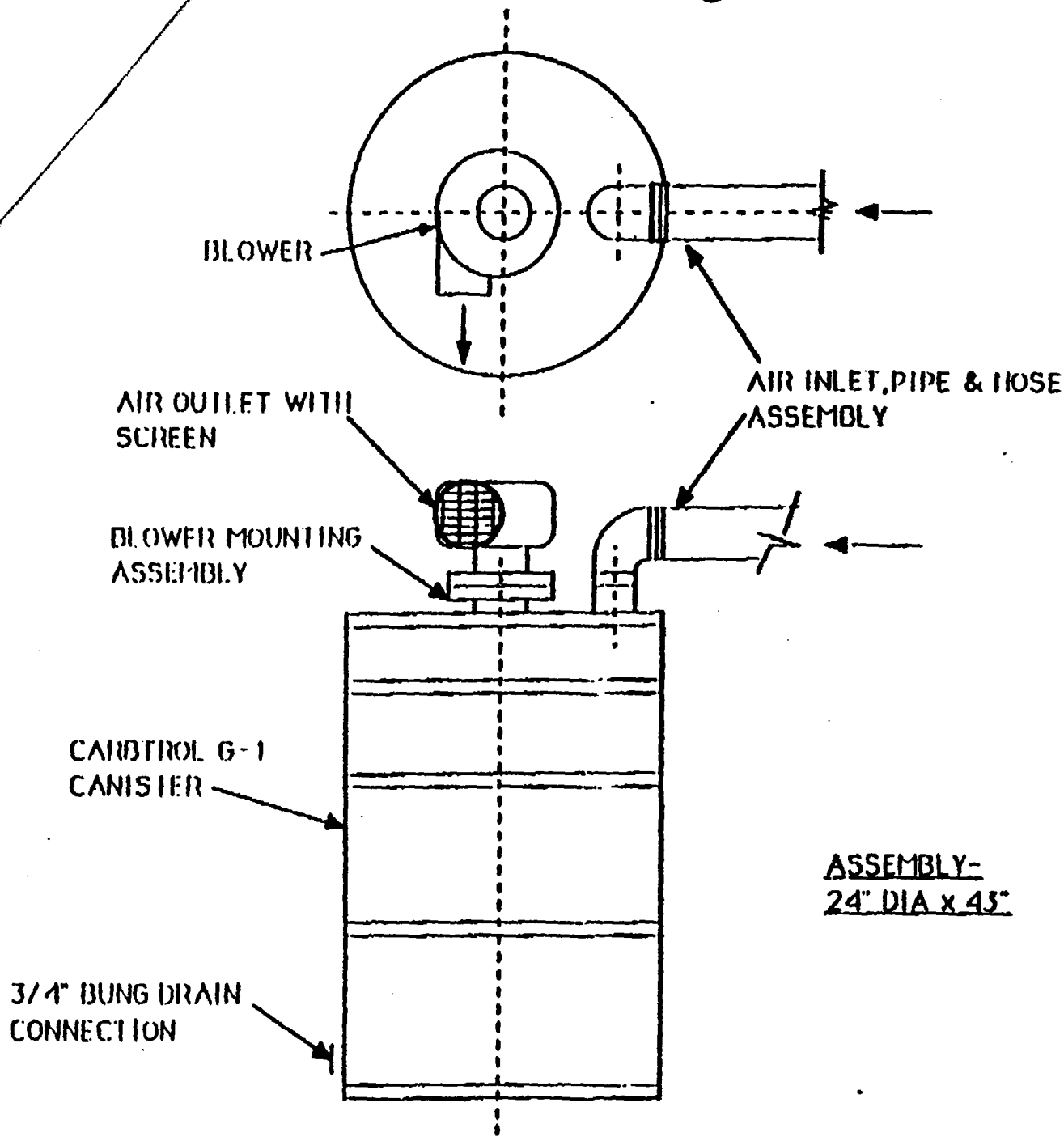

CARBTROL ® CORPORATION		39 RIVERSIDE AVENUE WESTPORT CONN. 06880 (203) 226-5642
SCALE ----		BY WH
DATE 11-29-81	WAH PN-00200	REV 3-22-91
G-1B-75 AIR PURIFICATION SYSTEM		
ARRANGEMENT	S	DWG 1123/1

CARBTROL

Air Purification Systems

ARRANGEMENT

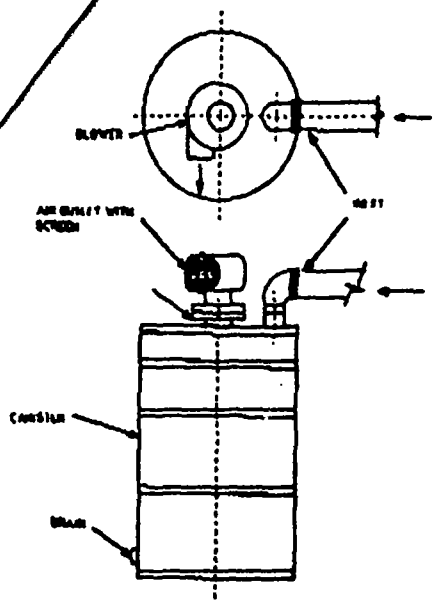

75 CFM SYSTEM

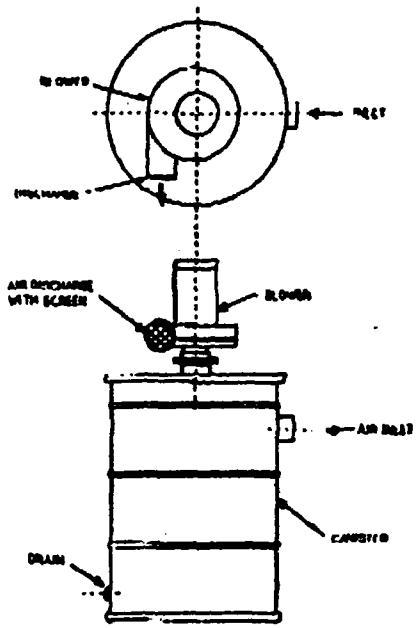

125, 300, 450 CFM SYSTEM

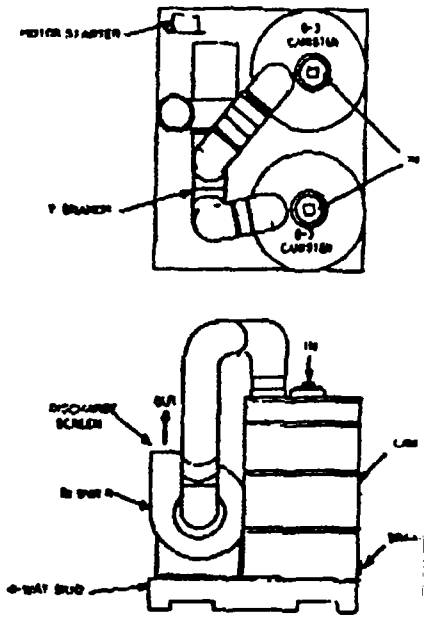

1000 CFM SYSTEM

SPECIFICATIONS

Model	G1B75	G2B125	G2B300	G3B450	G3B1000
Capacity (CFM)	75	125	300	450	1000
Carbon-Lbs./Canister	200	170	170	140	140
Number Canisters/System	1	1	1	1	2
Horsepower	1/12	1/3	1/2	3/4	3
Power Supply-Phase	1	1	1	1	3
Starter	None SJ Cord & Plug	None-SJ Cord & Plug	Manual Motor Mtg.	Manual Motor Mtg.	Manual Motor Mtg.
Suction Hose	2½"	4⅝"	4⅝"	4⅝"	7"
Dimensions	24"D x 43"H	24"D x 56"H	24"D x 56"H	24"D x 58"H	4'Sq. x 51"H

CARBTROL®
CORPORATION

39 Riverside Avenue, Westport, CT 06880 • 1-800-242-1150 • (203) 226-564

CleanHarbors
OF CHICAGO, INC.
11800 S. STONY ISLAND AVENUE
CHICAGO, IL 60617
(312) 646-6202

CERTIFIED MAIL - RETURN RECEIPT REQUESTED - ARTICLE #P 377 858 571

September 20, 1991

RECEIVED
SEP 23 1991
IEPA—DAPC—SPFLD.

Permit Section
ILLINOIS ENVIRONMENTAL PROTECTION AGENCY
Division of Air Pollution Control
2200 Churchill Road
P.O. Box 19276
Springfield, Illinois 62794-9276

Dear Sir:

Clean Harbors of Chicago, Inc. is submitting a permit application for addition of a shredder and compactor at the facility.

The shredder and compactor will each be movable and will be operated in the appropriate containment bay of drum storage areas where the material being processed is compactable. The shredder will handle materials which are 5 gallon pail size or smaller and the compactor will process materials which are 5 gallon pail size to 55 gallon drum size. The materials processed by each would include: RCRA empty containers, containers with solid or liquid hazardous or non-hazardous wastes, off-specification products, debris, personnel protection equipment, pharmaceuticals, filters, and cartridges.

The shredder is a Shred Pax Corp. Model AZ-15. Shredded material is discharged into a container for ultimate disposal. All hazardous waste prior to shredding will be disposed of as hazardous waste. Segregated non-hazardous waste (including RCRA empty containers) will be disposed of as a non-hazardous waste. When switching from shredding of hazardous waste to non-hazardous waste, the unit will be deconned by removal of all shredded material and a triple rinse. All decon material will be handled as a hazardous waste. Information on the shredder is included as an attachment.

The compactor is a Compacting Technologies International CTI Pro 8560. The compaction system meets NEMA 7 Class 1, Division 1 electrical standards and meets NFPA Guidelines for hazardous atmospheres. As drums are compacted, a special pump removed liquids during the compaction cycle. These liquids are pumped to

CleanHarbors

a separate container. The system has an electronic temperature probe and connecting dry chemical extinguisher system. A nitrogen purge is also included. All hazardous waste prior to compaction will be disposed of as a hazardous waste. Segregated non-hazardous waste (including RCRA empty containers) will be disposed of as a non-hazardous waste. When switching from compacting of hazardous waste to non-hazardous waste, the unit will be deconned by removal of all compacted material and a triple rinse. All decon material will be handled as a hazardous waste. Information on the compactor is included as an attachment.

If you have any further question on the permit application, please contact me at 312/646-6202.

Sincerely,

CLEAN HARBORS OF CHICAGO, INC.

James R. Laubsted
Compliance Manager

Attachment

JRL/mk

STATE OF ILLINOIS
ENVIRONMENTAL PROTECTION AGENCY
DIVISION OF AIR POLLUTION CONTROL
2200 CHURCHILL ROAD
SPRINGFIELD, ILLINOIS 62794-9276

APPLICATION FOR PERMIT (A)	FOR AGENCY USE ONLY
[x] CONSTRUCT [x] OPERATE	I.D. NO. 031-600-BTE
	PERMIT NO. 91090060
NAME OF EQUIPMENT TO BE CONSTRUCTED OR OPERATED: Shredder (B)	DATE 9-23-91

1a. NAME OF OWNER: CLEAN HARBORS OF CHICAGO		2a. NAME OF OPERATOR: CLEAN HARBORS OF CHICAGO	
1b. STREET ADDRESS OF OWNER: 11800 S. STONY ISLAND AVE.		2b. STREET ADDRESS OF OPERATOR: 11800 S. STONY ISLAND AVE	
1c. CITY OF OWNER: CHICAGO		2c. CITY OF OPERATOR: CHICAGO	
1d. STATE OF OWNER: ILLINOIS	1e. ZIP CODE: 60617	2d. STATE OF OPERATOR: ILLINOIS	2e. ZIP CODE: 60617

3a. NAME OF CORPORATE DIVISION OR PLANT: CLEAN HARBORS OF CHICAGO		3b. STREET ADDRESS OF EMISSION SOURCE: 11800 .S. STONY ISLAND		
3c. CTIY OF EMISSION SOURCE: CHICAGO	3d. LOCATED WITHIN CITY LIMITS: [x] YES [ ] NO	3e. TOWNSHIP:	3f. COUNTY: COOK	3g. ZIP CODE: 60617

4. ALL CORRESPONDENCE TO: (TITLE AND/OR NAME OF INDIVIDUAL) JAMES R. LAUBSTED	5. TELEPHONE NUMBER FOR AGENCY TO CALL: (312) 646-6202
6. ADDRESS FOR CORRESPONDENCE: (CHECK ONLY ONE) [ ] OWNER [ ] OPERATOR [X] EMISSION SOURCE	7. YOUR DESIGNATION FOR THIS APPLICATION: (C) S H R E D D E R

8. THE UNDERSIGNED HEREBY MAKES APPLICATION FOR A PERMIT AND CERTIFIES THAT THE STATEMENTS CONTAINED HEREIN ARE TRUE AND CORRECT, AND FURTHER CERTIFIES THAT ALL PREVIOUSLY SUBMITTED INFORMATION REFERENCED IN THIS APPLICATION REMAINS TRUE, CORRECT AND CURRENT. BY AFFIXING HIS SIGNATURE HERETO HE FURTHER CERTIFIES THAT HE IS AUTHORIZED TO EXECUTE THIS APPLICATION.

AUTHORIZED SIGNATURE(S): (D)

RECEIVED SEP 23 1991

BY [signature] 9/19/91	BY [signature] 9/19/91
SIGNATURE / DATE	SIGNATURE / DATE
ANTHONY R. PONGONIS	JAMES R. LAUBSTED
TYPED OR PRINTED NAME OF SIGNER	TYPED OR PRINTED NAME OF SIGNER
VICE-PRESIDENT	COMPLIANCES MANAGER
TITLE OF SIGNER	TITLE OF SIGNER

(A) THIS FORM IS TO PROVIDE THE AGENCY WITH GENERAL INFORMATION ABOUT THE EQUIPMENT TO BE CONSTRUCTED OR OPERATED. THIS FORM MAY BE USED TO REQUEST A CONSTRUCTION PERMIT, AN OPERATING PERMIT, A CONSTRUCTION OR OPERATING PERMIT.

(B) ENTER THE GENERIC NAME OF THE EQUIPMENT TO BE CONSTRUCTED OR OPERATED: THIS NAME WILL APPEAR ON THE PERMIT WHICH MAY BE ISSUED PURSUANT TO THIS APPLICATION. THIS FORM MUST BE ACCOMPANIED BY OTHER APPLICABLE FORMS AND INFORMATION.

C) PROVIDE A DESIGNATION IN ITEM 7 ABOVE WHICH YOU WOULD LIKE THE AGENCY TO USE FOR IDENTIFICATION OF YOUR EQUIPMENT. YOUR DESIGNATION WILL BE REFERENCED IN CORRESPONDENCE FROM THIS AGENCY RELATIVE TO THIS APPLICATION. YOUR DESIGNATION MUST NOT EXCEED TEN (10) CHARACTERS.

D) THIS APPLICATION MUST BE SIGNED IN ACCORDANCE WITH 35 ILL. ADM. CODE 201.154 OR 201.159 WHICH STATES: "ALL APPLICATIONS AND SUPPLEMENTS THERETO SHALL BE SIGNED BY THE OWNER AND OPERATOR OF THE EMISSION SOURCE OR AIR POLLUTION CONTROL EQUIPMENT, OR THEIR AUTHORIZED AGENT, AND SHALL BE ACCOMPANIED BY EVIDENCE OF AUTHORITY TO SIGN THE APPLICATION."

IF THE ONWER OR OPERATOR IS A CORPORATION, SUCH CORPORATION MUST HAVE ON FILE WITH THE AGENCY A CERTIFIED COPY OF A RESOLUTION OF THE CORPORATION'S BOARD OF DIRECTORS AUTHORIZING THE PERSONS SIGNING THIS APPLICATION TO CAUSE OR ALLOW THE CONSTRUCTION OR OPERATION OF THE EQUIPMENT TO BE COVERED BY THE PERMIT.

STATE OF ILLINOIS
ENVIRONMENTAL PROTECTION AGENCY
DIVISION OF AIR POLLUTION CONTROL
2200 CHURCHILL ROAD
SPRINGFIELD, ILLINOIS 62706

This Agency is authorized to require this information under Illinois Revised Statutes, 1979, Chapter 111 1/2, Section 1039. Disclosure of this information is required under that Section. Failure to do so may prevent this form from being processed and could result in your application being denied. This form has been approved by the Forms Management Center.

*DATA AND INFORMATION PROCESS EMISSION SOURCE	

*THIS INFORMATION FORM IS TO BE COMPLETED FOR AN EMISSION SOURCE OTHER THAN A FUEL COMBUSTION EMISSION SOURCE OR AN INCINERATOR. A FUEL COMBUSTION EMISSION SOURCE IS A FURNACE, BOILER, OR SIMILAR EQUIPMENT USED PRIMARILY FOR PRODUCING HEAT OR POWER BY INDIRECT HEAT TRANSFER. AN INCINERATOR IS AN APPARATUS IN WHICH REFUSE IS BURNED.

1. NAME OF PLANT OWNER: CLEAN HARBORS OF CHICAGO, INC.	2. NAME OF CORPORATE DIVISION OR PLANT (IF DIFFERENT FROM OWNER): CLEAN HARBORS OF CHICAGO, INC.
3. STREET ADDRESS OF EMISSION SOURCE: 11800 S. STONY ISLAND	4. CITY OF EMISSION SOURCE: CHICAGO

GENERAL INFORMATION

5. NAME OF PROCESS: SHREDDING OF CONTAINERS	6. NAME OF EMISSION SOURCE EQUIPMENT: SHREDDER	
7. EMISSION SOURCE EQUIPMENT MANUFACTURER: SHRED PAX CORP	8. MODEL NUMBER: AZ-15	9. SERIAL NUMBER:
10. FLOW DIAGRAM DESIGNATION(S) OF EMISSION SOURCE: SHREDDER		
11. IDENTITY(S) OF ANY SIMILAR SOURCE(S) AT THE PLANT OR PREMISES NOT COVERED BY THE FORM (IF THE SOURCE IS COVERED BY ANOTHER APPLICATION, IDENTIFY THE APPLICATION):		
12. AVERAGE OPERATING TIME OF EMISSION SOURCE: 8 HRS/DAY 5 DAYS/WK 50 WKS/YR	13. MAXIMUM OPERATING TIME OF EMISSION SOURCE: 24 HRS/DAY 7 DAYS/WK 52 WKS/YR	
14. PERCENT OF ANNUAL THROUGHPUT: DEC-FEB 25 % MAR-MAY 25 % JUN-AUG 25 % SEPT-NOV 25 %		

INSTRUCTIONS

1. COMPLETE THE ABOVE IDENTIFICATION AND GENERAL INFORMATION SECTION.
2. COMPLETE THE RAW MATERIAL, PRODUCT, WASTE MATERIAL, AND FUEL USAGE SECTIONS FOR THE PARTICULAR SOURCE EQUIPMENT. COMPOSITIONS OF MATERIALS MUST BE SUFFICIENTLY DETAILED TO ALLOW DETERMINATION OF THE NATURE AND QUANTITY OF POTENTIAL EMISSIONS. IN PARTICULAR, THE COMPOSITION OF PAINTS, INKS, ETC., AND ANY SOLVENTS MUST BE FULLY DETAILED.
3. EMISSION AND EXHAUST POINT INFORMATION MUST BE COMPLETED, UNLESS EMISSIONS ARE EXHAUSTED THROUGH AIR POLLUTION CONTROL EQUIPMENT.
4. OPERATING TIME AND CERTAIN OTHER ITEMS REQUIRE BOTH AVERAGE AND MAXIMUM VALUES.
5. FOR GENERAL INFORMATION REFER TO "GENERAL INSTRUCTIONS FOR PERMIT APPLICATIONS," APC-201.

DEFINITIONS

AVERAGE - THE VALUE THAT SUMMARIZES OR REPRESENTS THE GENERAL CONDITION OF THE EMISSION SOURCE, OR THE GENERAL STATE OF PRODUCTION OF THE EMISSION SOURCE. SPECIFICALLY:

AVERAGE OPERATING TIME - ACTUAL TOTAL HOURS OF OPERATION FOR THE PRECEDING TWELVE MONTH PERIOD.

AVERAGE RATE - ACTUAL TOTAL QUANTITY OF "MATERIAL" FOR THE PRECEDING TWELVE MONTH PERIOD, DIVIDED BY THE AVERAGE OPERATING TIME.

AVERAGE OPERATION - OPERATION TYPICAL OF THE PRECEDING TWELVE MONTH PERIOD, AS REPRESENTED BY AVERAGE OPERATING TIME AND AVERAGE RATES.

MAXIMUM - THE GREATEST VALUE ATTAINABLE OR ATTAINED FROM THE EMISSION SOURCE, OR THE PERIOD OF GREATEST OR UTMOST PRODUCTION OF THE EMISSION SOURCE. SPECIFICALLY:

MAXIMUM OPERATING TIME - GREATEST EXPECTED TOTAL HOURS OF OPERATIONS FOR ANY TWELVE MONTH PERIOD.

MAXIMUM RATE - GREATEST QUANTITY OF "MATERIAL" EXPECTED PER ANY ONE HOUR OF OPERATION.

MAXIMUM OPERATION - GREATEST EXPECTED OPERATION, AS REPRESENTED BY MAXIMUM OPERATING TIME AND MAXIMUM RATES.

*EMISSION INFORMATION

51. NUMBER OF IDENTICAL SOURCES (DESCRIBE AS REQUIRED):
ONE

AVERAGE OPERATION

CONTAMINANT	CONCENTRATION OR EMISSION RATE PER IDENTICAL SOURCE		METHOD USED TO DETERMINE CONCENTRATION OR EMISSION RATE
PARTICULATE MATTER	52a. GR/SCF	b. <0.1 LB/HR	c. MANUFACATURES DATA
CARBON MONOXIDE	53a. PPM (VOL)	b. LB/HR	c.
NITROGEN OXIDES	54a. PPM (VOL)	b. <0.1 LB/HR	c. MANUFACTURES DATA
ORGANIC MATERIAL	55a. PPM (VOL)	b. LB/HR	c.
SULFUR DIOXIDE	56a. PPM (VOL)	b. LB/HR	c.
**OTHER (SPECIFY)	57a. PPM (VOL)	b. LB/HR	c.

MAXIMUM OPERATION

CONTAMINANT	CONCENTRATION OR EMISSION RATE PER IDENTICAL SOURCE		METHOD USED TO DETERMINE CONCENTRATION OR EMISSION RATE
PARTICULATE MATTER	58a. GR/SCF	b. <0.1 LB/HR	c. MANUFACTURES DATA
CARBON MONOXIDE	59a. PPM (VOL)	b. LB/HR	c.
NITROGEN OXIDES	60a. PPM (VOL)	b. LB/HR	c.
ORGANIC MATERIAL	61a. PPM (VOL)	b. <0.1 LB/HR	c. MANUFACTURES DATA
SULFUR DIOXIDE	62a. PPM (VOL)	b. LB/HR	c.
**OTHER (SPECIFY)	63a. PPM (VOL)	b. LB/HR	c.

*ITEMS 52 THROUGH 63 NEED NOT BE COMPLETED IF EMISSIONS ARE EXHAUSTED THROUGH AIR POLLUTION CONTROL EQUIPMENT.
***"OTHER" CONTAMINANT SHOULD BE USED FOR AN AIR CONTAMINANT NOT SPECIFICALLY NAMED ABOVE. POSSIBLE OTHER CONTAMINANTS ARE ASBESTOS, BERYLLIUM, MERCURY, VINYL CHLORIDE, LEAD, ETC.

***EXHAUST POINT INFORMATION

64. FLOW DIAGRAM DESIGNATION(S) OF EXHAUST POINT:
SHREDDER

65. DESCRIPTION OF EXHAUST POINT (LOCATION IN RELATION TO BUILDINGS, DIRECTION, HOODING, ETC.):
OUTSIDE CONTAINER STORAGE AREA

66. EXIT HEIGHT ABOVE GRADE:	67. EXIT DIAMETER:
68. GREATEST HEIGHT OF NEARBY BUILDINGS: 25 FT	69. EXIT DISTANCE FROM NEAREST PLANT BOUNDARY: 100 FT
AVERAGE OPERATION	MAXIMUM OPERATION
70. EXIT GAS TEMPERATURE: AMBIENT °F	72. EXIT GAS TEMPERATURE: AMBIENT °F
71. GAS FLOW RATE THROUGH EACH EXIT: NEGLIBLE ACFM	73. GAS FLOW RATE THROUGH EACH EACH EXIT: NEGLIBLE ACFM

***THIS SECTION SHOULD NOT BE COMPLETED IF EMISSIONS ARE EXHAUSTED THROUGH AIR POLLUTION CONTROL EQUIPMENT.

RAW MATERIAL INFORMATION		
NAME OF RAW MATERIAL	AVERAGE RATE PER IDENTICAL SOURCE	MAXIMUM RATE PER IDENTICAL SOURCE
20a.	b. LB/HR	c. LB/HR
21a.	b. LB/HR	c. LB/HR
22a.	b. LB/HR	c. LB/HR
23a.	b. LB/HR	c. LB/HR
24a.	b. LB/HR	c. LB/HR

PRODUCT INFORMATION		
NAME OF PRODUCT	AVERAGE RATE PER IDENTICAL SOURCE	MAXIMUM RATE PER IDENTICAL SOURCE
30a.	b. LB/HR	c. LB/HR
31a.	b. LB/HR	c. LB/HR
32a.	b. LB/HR	c. LB/HR
33a.	b. LB/HR	c. LB/HR
34a.	b. LB/HR	c. LB/HR

WASTE MATERIAL INFORMATION		
NAME OF WASTE MATERIAL	AVERAGE RATE PER IDENTICAL SOURCE	MAXIMUM RATE PER IDENTICAL SOURCE
40a.	b. LB/HR	c. LB/HR
41a. EMPTY PAILS	b. 100 LB/HR	c. 2,500 LB/HR
42a. PAILS CONTAINING WASTE	b. 100 LB/HR	c. 2,500 LB/HR
43a. DEBRIS	b. 100 LB/HR	c. 2,500 LB/HR
44a.	b. LB/HR	c. LB/HR

*FUEL USAGE INFORMATION		
FUEL USED	TYPE	HEAT CONTENT
50a. NATURAL GAS ☐	b.	c. 1000 BTU/SCF
OTHER GAS ☐		BTU/SCF
OIL ☐		BTU/GAL
COAL ☐		BTU/LB
OTHER ☐		BTU/LB
d. AVERAGE FIRING RATE PER IDENTICAL SOURCE: BTU/HR	e. MAXIMUM FIRING RATE PER IDENTICAL SOURCE: BTU/HR	

*THIS SECTION IS TO BE COMPLETED FOR ANY FUEL USED DIRECTLY IN THE PROCESS EMISSION SOURCE, E.G. GAS IN A DRYER, OR COAL IN A MELT FURNACE.

SHRED PAX

MODEL AZ-7

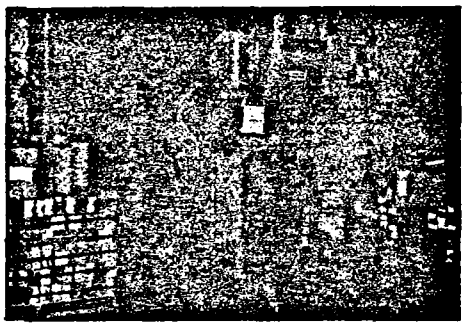

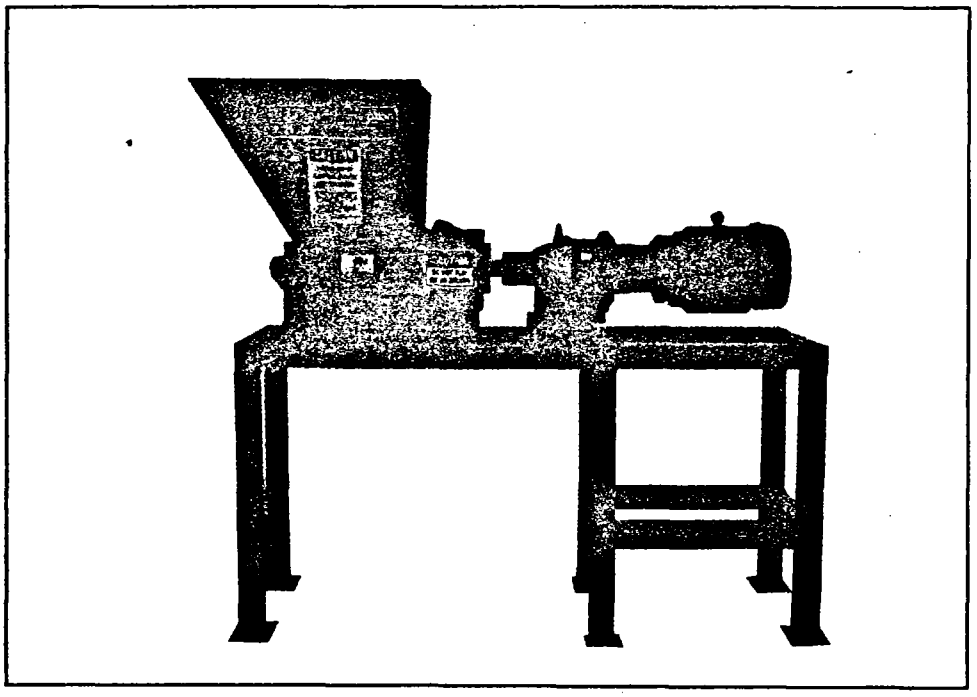

FEATURES & BENEFITS

- ***Direct Drive Operation***
  100% power applied to cutters/no conversion loss.
- ***Patented Cutter Knife Design***
  Wear resistant for long service life.
- ***Spring Steel Hex Shaft Design: Patented Axial Play Control***
  Permits shaft Flex/Power distributed over entire shaft perimeter.
- ***Power Distributes To Either Shaft***
  Provides deliberate, consistent shredding action for all types of material.
- ***Electro-Magnetic In Line Overload Sensors***
  Automatic reversing action during overload condition.
- ***Maximum Torque, Minimum Horsepower***
  Reduces material volume 50% to 80%.
- ***Electro-Mechanical Operation***
  Economical to use: Low energy consumption. Low operating costs.
- ***Slow Speed Operation***
  Quiet, minimum dust generation.
- ***Heavy Duty Construction***
  Requires no special foundation/low installation cost.
- ***Compact Modular Design***
  Minimum space requirements - mobile or stationary installation.
- ***Finest Quality Components; Precision Manufactured***
  Reliable performance, ease of maintenance and long life.
- ***In House Engineering and Design***
  Systems to meet all types of applications, gradation and thru-put requirements.

APPLICATIONS

Plastic Products I Glass Products I Proprietory Document Destruction I Asbestos Debris I Pharmaceutical Products I Aluminum, Steel Cans I Hospital Waste I Aluminum Turnings I Office Waste I Aerosol Cans I Dated, Defective Product Destruction I General Waste

SPECIFICATIONS

AZ-7
HORIZONTAL

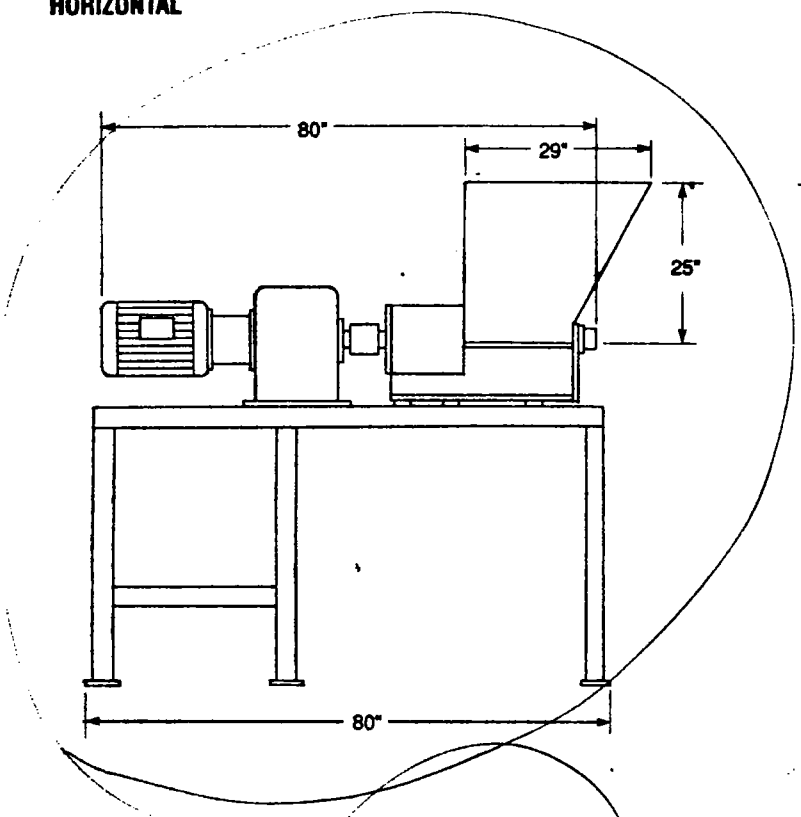

AZ-7
VERTICAL

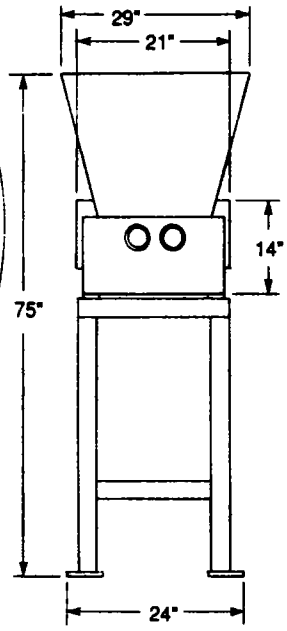

AZ-7
VERTICAL

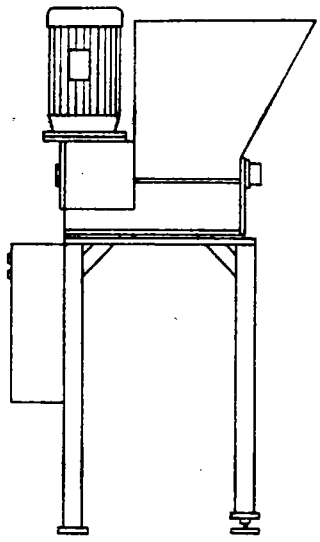

MODEL	AZ 7 Horizontal	AZ 7 Vertical
H. P.	7½-10	7½-10
Motor(s)...3 PH.	TEFC	TEFC
Voltage	208/230/460	208/230/460
Hertz	60	60
Approx. Wt.	850 lbs.	900 lbs.

**Stand and hopper dimensions can be altered to fit customer specifications. Hopper dimensions will vary with application.

CUTTING CHAMBER	AZ 7 Horizontal	AZ 7 Vertical
Width (inside)	14 in.	14 in.
Length (inside)	17 in.	17 in.
# of knives	27	27
*Std. Knife Thickness	15.5 mm (5/8")	15.5 mm (5/8")
Knife Arrangement	As Desired	As Desired

**Dimensions (Machine Only): Dimensions shown are nominal and subject to change. If dimensions and/or specifications are critical, please consult the factory.

OPTIONS & ACCESSORIES

- Portable Installation
- Matched, Pax Pump
- Automatic Controls
- SNP "Shred and Pack" System
- Variable Knife Thicknesses Horizontal Drive
- Liquid Retrieval System
- Custom Designed Hoppers
- Pneumatic Feeders
- Electric Eye Sensor
- Infeed and Discharge Conveyors
- Explosion Proof Motors and Electrical Panels

Shred Pax low-speed, high-torque shredders and accessories are manufactured under U.S. Patent Numbers 3845907, 3880361, 3981455, 4247056 and others pending.

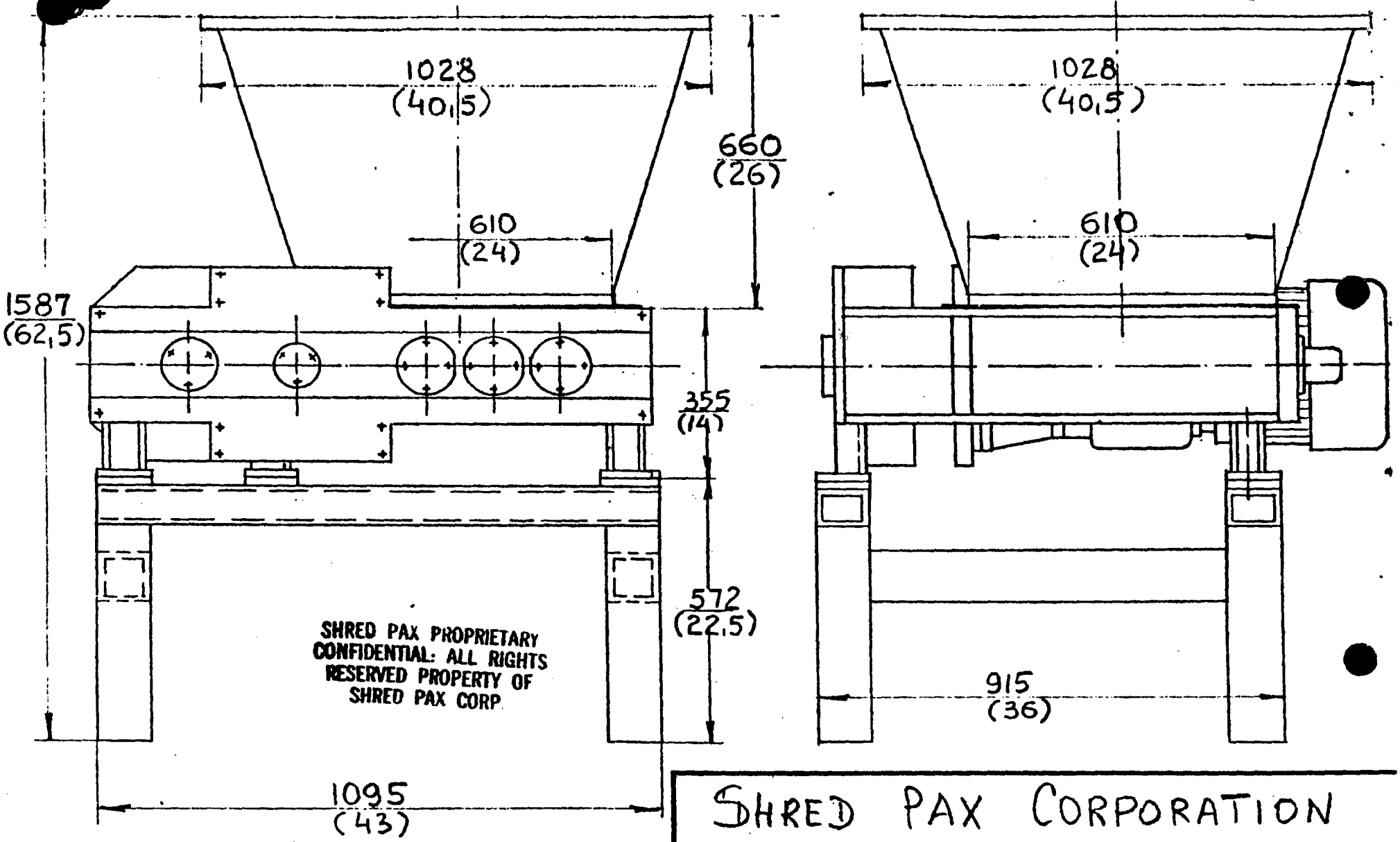

SHRED PAX PROPRIETARY CONFIDENTIAL: ALL RIGHTS RESERVED PROPERTY OF SHRED PAX CORP.

ALL DIMENSIONS ARE IN "MM" AND DECIMALS.

SHRED PAX CORPORATION		
SCALE: 3/32 = 1"	APPROVED BY:	DRAWN BY GDN
DATE: 06.25.81		REVISED
MODEL: AZ-10	STANDARD AZ-10	
136 W. COMMECIAL AVE. WOODDALE, IL. 60191 (312)595-8780		DRAWING NUMBER

Page _____
Dates _____

Facility Clean Harbors of Chicago, Inc ID ILD000608407

NUMBER	DATE	ITEM	LOC
28	9-15-93	Telefax from IEPA containing	B, 1, 3
		copies of Clean Harbor's Comments	
		regarding draft U.S.EPA RCRA per-	
		mit, dated August 5 and 12, 1993	
		(Comments have been sent to Mark	
		Schollenberg, IEPA)	

ADMINISTRATIVE RECORD INDEX

Please Print

Facility Clean Harbors of Chicago, Inc.

ID # ILD 000608407

Item #	Item Date	Description	Item Filed
22	04-15-93	Letter from Paul Ahearn to G. Hamper Re: Withdrawal of Subpart X Unit from permit application	B.1.1
23	4-21-93	Draft U.S. EPA portion of RCRA hazardous waste permit for Clean Harbors.	B.1.1
24	4-21-93	Statement of Basis for the U.S. EPA Draft RCRA permit for Clean Harbors	B.1.1
25	4-21-93	RCRA Draft Permit Sign-Off sheet (Signed by Associate Div. Director on 4-29)	B.1.1
26	5-04-93	Letter from G.J. Hamper. Re: submittal of the draft Federal Permit for Clean Harbors to Illinois EPA	B.1.1
27	Sept 7, 93	Public involvement material from IEPA to U.S. EPA. Attachments: a-public Notice b- newspaper tearsheet and voucher of affidavit of publications c- Radio announcement (cover letters) d- Dated mailing list e- Repository cover letter. f- Verification that matls were received by repository location g- Publication in a newspaper about the draft permit for Clean Harbors h- Public hearing transcript	B.1.3

ILLINOIS-16

ADMINISTRATIVE RECORD INDEX

Please Print

Facility Clean Harbors of Chicago, INC.

ID # ILD 000608471

Item #	Item Date	Description	Item Filed
15	01-15-93	Letter from F.W. Sherman, Carlson Environmental. Re: Modeling for potential releases at Clean Harbors	B.1.1
16	02-03-93	Letter from L. Eastep to F. Sherman Carlson Environmental. Re: Proposed Protocol for Modeling Potential Air Releases	B.1.1
17	02-25-93	Letter from F. Sherman, Carlson Environmental to L. Eastep, IEPA. Re: Comments on L. Eastep's letter of 02-03-93	B.1.1
18	01-29-93	Letter from L. Eastep to Paul Ahearn, Clean Harbors. Re: NOD on Clean Harbor's 12-03-92 Revised Part B permit application	B.1.1
19	03-15-93	Letter from Paul Ahearn, Clean Harbors to IEPA. Re: Submittal of additional Part B permit application	B.1.1
20	02-08-93	Letter from G. Hamper, U.S. EPA to Paul Ahearn, Clean Harbors Re: Request for Info. on Subpart X Units	B.1.1
21	04-06-93	Letter from Paul Ahearn, Clean Harbors to G. Hamper U.S. EPA. Re: Extension of time for the Submittal of Information on Proposed Subpart X Unit.	B.1.1

ADMINISTRATIVE RECORD INDEX

Please Print

Facility CLEAN HARBORS of CHICAGO, Inc.

ID # ILD000608471

Item #	Item Date	Description	Item Filed
8	5-30-91	Letter from Paul A. Ahearn, Clean Harbors to M. Schollenberger, IEPA. Re: Extension for Submittal of Revised Part B permit application	B.1.1
9	11-04-91	Letter from L. Eastep, IEPA, to Clean Harbors. Re: NOD on Clean Harbor's June 11, 1991 Revised Part B permit application	B.1.1
10	02-17-91	Letter from Paul A. Ahearn, Clean Harbors, to IEPA. Re: Response to IEPA's April 19, 1991 NOD.	B.1.1
11	05-28-92	Letter from Paul A. Ahearn, Clean Harbors, to M. Schollenberger, IEPA. Re: Submittal of additional Part B permit application information	B.1.1
12	10-05-92	IEPA's Operating Permit for Clean Harbor's Waste Compactor	B.1.6
13	10-01-92	Letter from L. Eastep, IEPA to Clean Harbors. Re: NOD on Clean Harbor's Revised Part B permit application of February 14, 1992	B.1.1
14	12-09-92	Letter from J. Laubsted, Clean Harbors, to M. Schollenberger, IEPA. Re: Additional Part B permit application information	B.1.1

ILLINOIS-16

ADMINISTRATIVE RECORD INDEX

Please Print

Facility CLEAN HARBORS OF CHICAGO, INC (formerly CHEM-CLEAR)

ID # ILD 000 608 471

Item #	Item Date	Description	Item Filed
1	02/25/83	RCRA Part B Permit Application	RCRA Files Record Center
2	07/09/84	Letter from Ruth C. Niesen, chem clear, to R. Stone, U.S. EPA Re: Submittal of Revised Part B permit application	B.1.1
3	10/19/89	Letter from Lawrence Eastep of IEPA to Chem Clear Re: Request for an up-to-date revision of the Part B permit appl. for Chem Clear	B.1.1
4	07-26-90	Letter for L. Eastep, IEPA, to James Laubsted, Chem-Clear. Re: Revised Part B permit application	B.1.1
5	09-27-90	Letter from Stephen Pozner, of Clean Harbors (formerly Chem-Clear), to IEPA. Re: Submittal of Revised Part B permit application	B.1.1
6	11-09-90	Letter from L. Eastep, IEPA, to Clean Harbors. Re: Notice of Deficiency on Part B permit application	B.1.1
7	04-19-91	Letter from L. Eastep, IEPA, to Clean Harbors. Re: Notice of Deficiency on Clean Harbor's Feb-19-1991 Revised Part B permit application.	B.1.1

ILLINOIS-16